OFFICE OF RIVER PROTECTION
P.O. Box 450, MSIN H6-60
Richland, Washington 99352

NOV 2 1 2016

16-ECD-0056 CCN: 292574

Ms. Alexandra K. Smith, Program Manager
Nuclear Waste Program
Washington State
Department of Ecology
3100 Port of Benton Blvd.
Richland, Washington 99354

Ms. Smith:

SUBMITTAL OF DANGEROUS WASTE PERMIT CLASS 3 MODIFICATION NOTIFICATION FOR THE EFFLUENT MANAGEMENT FACILITY, 24590-BOF-PCN-ENV-15-002

Reference: WA7890008967, "Dangerous Waste Portion of the Hanford Facility Resource Conservation and Recovery Act Permit for the Treatment, Storage, and Disposal of Dangerous Waste, Operating Unit 10, 'Waste Treatment and Immobilization Plant.'"

This letter transmits the Class 3 Dangerous Waste Permit (DWP) permit modification for secondary containment of the Effluent Management Facility (EMF) to the Washington State Department of Ecology. This permit modification provides design information for the secondary containment of the EMF and proposed modifications to the DWP chapters to add the EMF to the Waste Treatment and Immobilization Plant (WTP).

This transmittal includes:

- Fact Sheet Proposed Class 3 permit modification of the Hanford Facility Resource Conservation and Recovery Act of 1976 Portions for the Treatment, Storage, and Disposal Waste, Permit II, Operating Unit Group 10, WTP, Effluent Management Facility, Secondary Containment (Attachment 1), which provides a summary of the Class 3 permit modification
- Permittee and Co-Permittee certifications (Attachment 2) required under WAC 173-303-810(12) to support submittal of the Class 3 permit modification

- Permit Change Notice (24590-BOF-PCN-ENV-15-002) (Attachment 3), which includes proposed changes to DWP Chapters to reflect the addition of EMF to the WTP scope, EMF design information, including the associated Independent Qualified Registered Professional Engineer Report for the EMF Secondary Containment System.

The public comment period for this permit modification is scheduled to begin on November 28, 2016, and continue through January 27, 2017.

If you have any questions, please contact Lori A. Huffman, Director, Environmental Compliance Division, (509) 376-0104, or Roger J. Landon, Environmental Protection Manager, Bechtel National, Inc., (509) 371-2165.

for Michael W. Costas

M. G. McCullough, Project Director
Bechtel National, Inc.

Kevin W. Smith, Manager
Office of River Protection

ECD:MEB

Attachments: (3)

cc: See page 3

cc w/attachs:
J. Cantu, Ecology
A.S. Carlson, Ecology
S.L. Dahl-Crumpler, Ecology
Gonzaga University, Foley Center Library **(DVD)**
HF Operating Record (J.K. Perry, MSA, A3-01) **(DVD)**
Portland State University, Govt. Information **(DVD)**
University of Washington, Suzzallo Library, Govt. Publications Department **(DVD)**
U.S. Department of Energy, Public Reading Room, Washington State University, Tri-Cities, Consolidated Information Ctr., **(DVD)**
Administrative Record (WTP H-0-8)
BNI Correspondence
Environmental Portal, LMSI

cc w/o attachs:
L.W. Baker, BNI
R.E. Cone, BNI
M.W. Costas, BNI
B.L. Curn, BNI
A.J. Dobson, BNI
J.H. Dunkirk, BNI
M.W. Frei, BNI
L.L. Fritz, BNI
R.S. Hajner, BNI
K.D. Irwin, BNI
R.J. Landon, BNI
M.G. McCullough, BNI
J.D. Norwood, BNI
W.S. Oxenford, BNI
J.M. St. Julian, BNI
B.G. Schappell, BNI
E.F. Sproat, III, BNI
E.A. Winkelman, BNI
P.D. Worley, BNI
D.M. Yasek, BNI
R.S. Skeen, CTUIR
M.E. Jones, Ecology
J. Richardson, Ecology
G.P. Bohnee, NPT
K. Niles, Oregon Energy
A.C. McKarns, RL
R. Buck, Wanapum
R. Jim, YN

Introduction

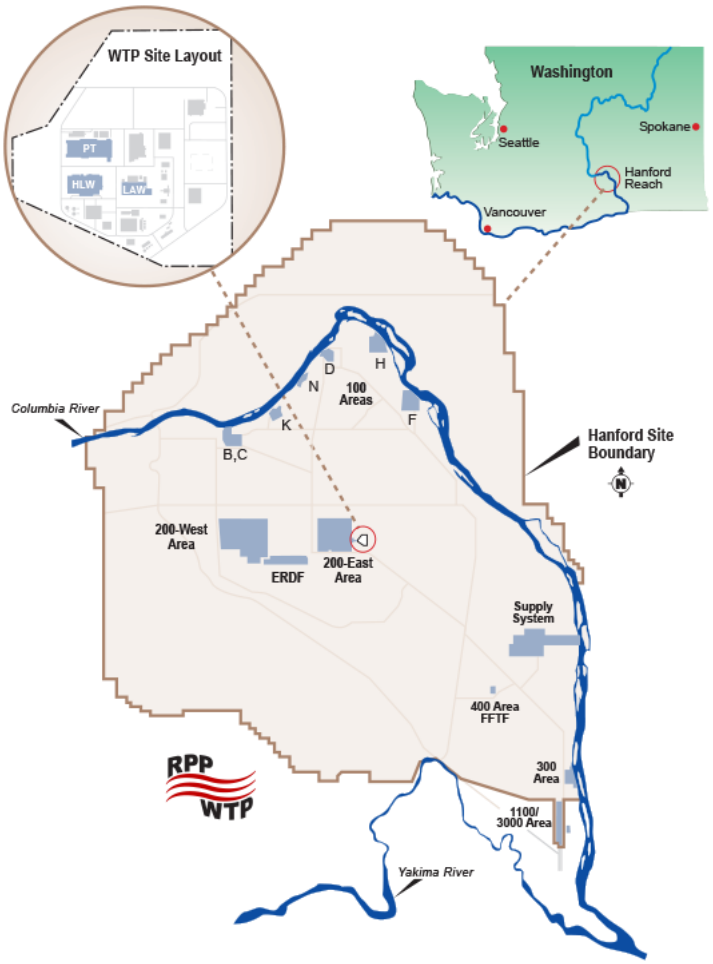

Hanford's 177 underground tanks currently hold about 56 million gallons of high-level radioactive mixed waste. Most of the tanks are beyond their engineered design life, and some have leaked in the past. On September 25, 2002 Ecology issued the final Dangerous Waste Permit to the Department of Energy, Office of River Protection (ORP) and Bechtel National, Inc. (BNI) to allow construction of the Hanford Waste Treatment and Immobilization Plant (WTP). The WTP is made up of the Low Activity Waste, Pretreatment Facility, High Level Waste Facility, Laboratory Facility and Balance of Facilities. Three of the five facilities are near completion. To begin treating the tank waste the ORP developed a plan to begin feeding low-activity tank waste directly to the WTP Low-Activity Waste (LAW) Facility, allowing the treatment of Hanford tank waste to begin as early as 2022. The plan is called Direct Feed Low Activity Waste (DFLAW).

One advantage of the DFLAW configuration is that it allows ORP to begin treating the liquid portion of the tank waste called supernate using the WTP facilities that are closest to completion, while technical issues at the WTP Pretreatment and High-Level Waste (HLW) facilities are resolved.

Most of the WTP facilities necessary to process waste in the DFLAW configuration are complete or nearly complete; however, the DFLAW configuration requires the construction of two new facilities and installation of additional underground dangerous waste transfer lines. The two facilities to be designed and constructed are the Effluent Management System (EMF) and the LAW Pretreatment System (LAWPS) Facilities. The functions that these two facilities will perform duplicates the functions that are part of the WTP Pretreatment Facility. The LAWPS is not part of this permit modification and will be part of a separate permit modification process. The Effluent Management Facility (EMF), which is supported by this permit modification package, will be constructed at the WTP site to manage liquid effluents generated during treatment of tank waste.

This proposed modification to the WTP Dangerous Waste Permit (DWP) involves the addition of the EMF to the WTP Permit and allows for changes to other WTP facilities in order to accommodate the DFLAW configuration. This proposed modification is the first modification that will be submitted to support the construction of the EMF.

Direct Feed LAW Configuration Overview

The DFLAW configuration supports treatment and processing of low-activity waste from the Hanford Tank Farms, allowing the LAW Facility and the Analytical Laboratory (Lab) to begin treating waste prior to startup of the Pretreatment Facility. In the original baseline configuration of the Waste Treatment Plant, characterized low-activity and high-level wastes are sent directly from the Hanford Tank Farms to the WTP Pretreatment Facility via underground transfer lines. The mixed waste is pretreated in the Pretreatment Facility and sent either to the HLW or LAW facilities for processing, depending on the waste characterization.

The DFLAW configuration replicates functions of the WTP Pretreatment Facility which have not been impacted by technical issues, including the management and treatment of liquid effluents from the Lab Radioactive Liquid Waste Disposal (RLD) System and the LAW Facility RLD System. Modifications will be made to some parts of the current WTP facilities to allow the LAW Facility to treat waste in the DFLAW configuration. As shown in the DFLAW process picture, the Hanford Tank waste will be sent directly from Hanford Tank Farms to the LAWPS Facility, via underground waste transfer lines. The pre-treated low-activity waste from the LAWPS is transferred to the LAW Facility via an underground waste transfer line for processing. In this configuration, low-activity waste bypasses the WTP Pretreatment Facility and feeds directly into the LAW Facility from the LAWPS Facility.

Direct Feed LAW Process

Effluent Management Facility

The EMF consists of various permitted equipment, including 9 tank systems, 18 miscellaneous units, secondary containment systems, underground waste transfer lines, and additional ancillary equipment. Waste from LAWPS will be routed to the LAW Facility for treatment. The effluent from LAW treatment will be collected in EMF and then concentrated via evaporation. Concentrated effluent from EMF may be transferred to:

- The LAW Process Receipt Vessel;
- The Tank Farms Double-Shell Tanks;
- The Hanford Site Liquid Effluent Retention Facility (LERF)/Effluent Treatment Facility (ETF).

The EMF provides four major functions to support the DFLAW configuration including:

- Serving as a low-point drain for DFLAW waste transfer lines;
- Concentrating fluids containing low levels of radioactive material from the LAW RLD vessels, the LVP tank, and the Lab RLD vessel via an evaporator;
- Transferring the condensate from the evaporator to the LERF/ETF via existing transport piping; and
- Recycling the evaporator concentrate into the LAW process.

Waste Treatment Plant

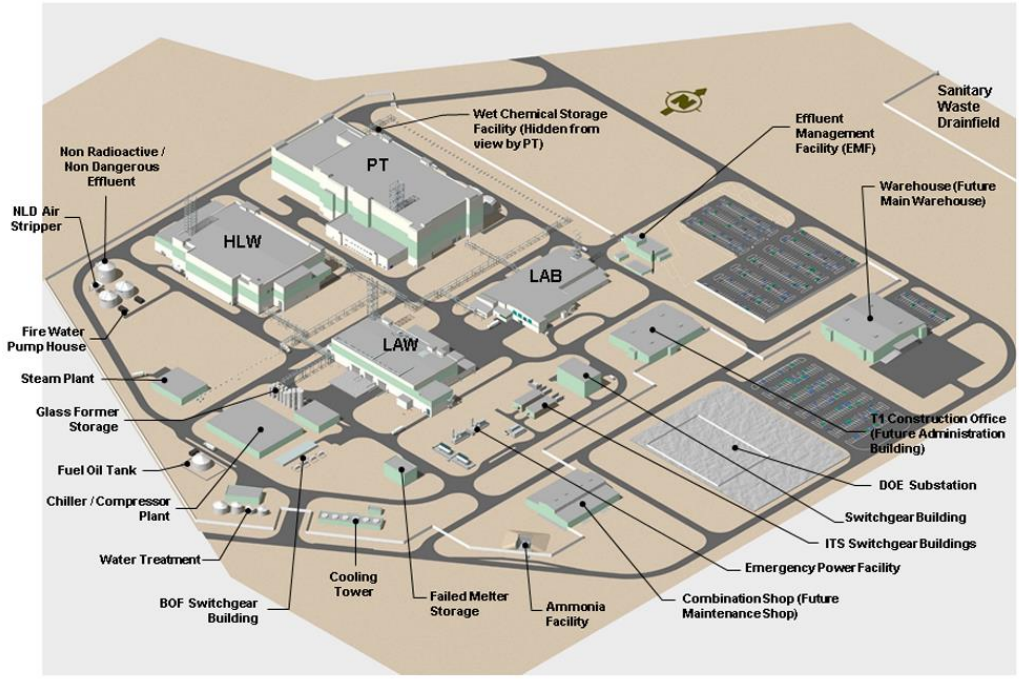

The EMF includes four primary buildings:

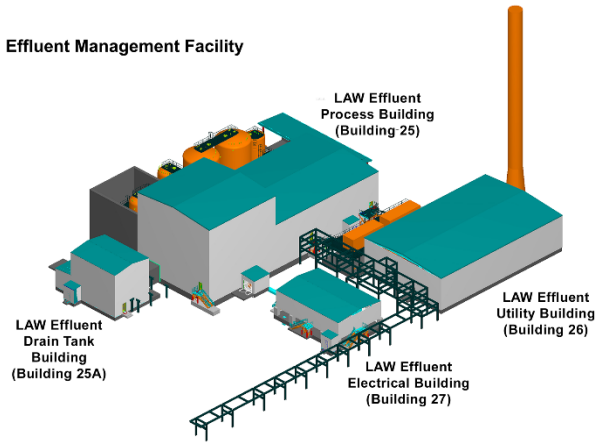

- **LAW Effluent Processing Building:** Houses the Direct Feed LAW EMF Process (DEP) System and Direct Feed LAW EMF Vessel Vent Process (DVP) System equipment, including evaporator system vessels, secondary containment systems, and additional ancillary equipment. This is where the effluent will be collected and processed;
- **LAW Effluent Drain Tank Building:** Contains the Low-Point Drain Vessel and associated equipment, and the Drain Tank Maintenance Area. This is where the DFLAW underground waste transfer lines connect;
- **LAW Effluent Utility Building:** Houses EMF heating, ventilation and air conditioning (HVAC) equipment, various Balance of Facility utility equipment, and the associated electrical equipment;
- **LAW Effluent Electrical Building**: Contains EMF electrical equipment, uninterruptible power electrical system batteries, and controls and instrumentation equipment.

Dangerous Waste Permit

This modification to the Waste Treatment and Immobilization Plant permit is the first in a series of modification which will detail both construction and some operations requirements to support the WTP Facility. The WTP DWP, under the permitting authority of the Washington State Department of Ecology (Ecology), is part of the larger Hanford Site-wide Resource, Conservation, and Recovery Act of 1976 (RCRA) Permit (WA7890008967).

Since September 2002 Ecology, ORP, and BNI have been using a phased approach to permit the WTP. As Permittees, ORP and BNI have been submitting technical documents and design information on a schedule to allow construction of the rest of WTP and to complete the permit application. The inclusion of an Interim Compliance Schedule was agreed to with the Washington State Department of Ecology in 2002. It is included in the WTP Permit as an Interim Compliance Schedule (Appendix 1.0).

Concurrently with these modifications, Ecology is preparing operations portions of the WTP Permit. The LAB Operating Permit will be issued for public comment in early 2017, followed by the LAW Operating Permit. The Class 3 Permit Modifications for LAW and LAB Operations are not part of this permit modification and will be detailed and addressed with separate modifications and independent public comment periods.

WTP Permitting Process and EMF Interim Compliance Schedule

A phased permitting approach allows updates to portions of the DWP as needed by submitting individual Permit Modifications. As permittees, ORP and BNI will ensure that the DWP is modified to include all aspects related to the Treatment, Storage, and Disposal Facility (TSD) prior to facility operations and waste treatment. The purpose of the phased permitting approach is to allow some construction activities to occur prior to the final development of the facility operations aspects of the permit chapters and appendices. Prior to receipt of waste for treatment at the WTP, including the EMF, the permittees will ensure compliance with all applicable requirements in dangerous waste regulations WAC 173-303 and requirements detailed in the WTP DWP. Ecology will provide the final approval after the permittees submit the final, certified and complete permit application to the State of Washington. Once approval is granted by the State of Washington, then the permittees can begin treatment and storage of mixed waste at the WTP Facility.

New EMF Interim Compliance Schedule

As in the past, in a phased permitting approach, the Washington State Department of Ecology recognize that not all of the application information associated with a traditional Part B application is available at this time. Therefore, Ecology will issue an interim compliance schedule for public review in the second portion of this Class 3 modification. The interim compliance schedule will support Ecology's draft permit modification to detail what additional design and operations information is required to ensure the permit application for EMF is complete. It is expected that Ecology's interim compliance schedule will request additional operational information to update the permit chapters (i.e., Waste Analysis Plan, Procedures to Prevent Hazards, contingency plan, and inspection plans) and provide additional design information, specific to EMF.

The EMF permitting will be conducted in separate permit modifications. The initial modification, currently out for public review, is to submit a permit application through a Class 3 modification with available design information to begin construction of the facility secondary containment. The second modification will be a Class 2 modification to submit proposed detailed design information for the WTP underground transfer lines to support EMF. Finally, modifications will be provided to address the remaining dangerous waste management unit components including design information for the EMF equipment, including miscellaneous units and tank systems, and operating permit details. It is anticipated that at the completion of these modifications, the EMF specific portions of the WTP DWP will be in compliance with all the relevant requirements of the dangerous waste regulations in WAC 173-303.

Additional permit modifications will be required per the interim compliance schedule in the future to modify the WTP operational (baseline) configuration. In the baseline configuration, WTP will receive tank waste directly from the Hanford tank farms, process the waste in the Pretreatment Facility and then treat and immobilize the waste in the LAW and HLW Facilities. As with the DFLAW configuration, Ecology will provide the permittees with final approval begin treatment and storage of mixed waste at the WTP in the baseline.

Permit Modification - 24590-BOF-PCN-ENV-15-002

As described above, permit modifications will be provided to Ecology to support the design and construction of the EMF. The first modification (24590-BOF-PCN-ENV-15-002) addresses construction of the secondary containment systems that have been designed to hold the permitted tanks and vessels, miscellaneous units, and ancillary equipment that will be housed in the facility. There are five permitted secondary containment systems in the EMF located at the (-)39' and 0' elevations. The secondary containment systems are provided with liners that are sloped to direct liquids to secondary containment sumps. All secondary containment systems meet WAC 173-303-640(4) waste removal criteria. The secondary containment systems are capable of detecting and collecting a release of liquid and include nine permitted secondary containment sumps. All sumps have leak detection instrumentation with the ability to detect a release of liquid in the secondary containment system. The secondary containment systems satisfy WAC 173-303-640(4) leak detection criteria, and all secondary containment systems are designed and will be operated to contain 100% capacity of the largest dangerous or mixed waste tank or vessel within its boundary.

This modification is being submitted as a Class 3 modification in accordance with WAC 173-303-830(4)(c)(i-v) to ensure that all requirements associated with the submittal are met. A complete list of the documents provided with this modification is provided in Table 1.

Table 1: Documents Provided with the Permit Modification.

Engineering Document Title	Document Number	Rev #	Remarks	WAC Requirement
Permit Chapters				
Chapter 1, Part A	N/A	3	Updated to incorporate addition of EMF to the WTP	173-303-806(4)(a) 173-303-806(4)(c) 173-303-640(3)(a)(i)
Chapter 2, Topographic Map	N/A	N/A	• Updated to incorporate addition of EMF to the WTP	173-303-806(4)(a)(xviii)
Chapter 3A , Waste Analysis Plan	N/A	N/A	Updated to incorporate addition of EMF to the WTP	173-303-806(4)(a)(iii) 173-303-300(5)
Chapter 3B, Quality Assurance Project Plan	N/A	N/A	Updated to incorporate addition of EMF to the WTP	173-303-806 173-303-335
Chapter 4, Process Information	N/A	N/A	Updated to incorporate addition of EMF to the WTP	173-303-806(4)(a)
Appendix 4A	N/A	N/A	Updated to incorporate addition of EMF to the WTP	173-303-806(4)(a)
Appendix 4E, LAW	N/A	N/A	Updated to incorporate addition of EMF to the WTP	173-303-806(4)(a)
Appendix 4G, EMF	N/A	N/A	Updated to incorporate addition of EMF to the WTP	173-303-806(4)(a)
Appendix 4H, Lab	N/A	N/A	Updated to incorporate addition of EMF to the WTP	173-303-806(4)(a)

Engineering Document Title	Document Number	Rev #	Remarks	WAC Requirement
Appendix 4I, BOF	N/A	N/A	Updated to incorporate addition of EMF to the WTP	173-303-806(4)(a)
Chapter 6, Procedures to Prevent Hazards	N/A	N/A	Updated to incorporate addition of EMF to the WTP	173-303-806(4)(a)(vii) 173-303-350
Appendix 6A, Inspection Schedule	N/A	N/A	Updated to incorporate addition of EMF to the WTP	173-303-806(4)(a)(v) 173-303-320
Chapter 7, Contingency Plan	N/A	N/A	Updated to incorporate addition of EMF to the WTP	173-303-806(4)(a)(viii)
Appendix 7A, Emergency Response	N/A	N/A	Deletes Appendix 7A. Information has been incorporated into Chapter 7.	173-303-806(4)(a)
Chapter 8, Personnel	N/A	N/A	Updated to incorporate addition of EMF to the WTP	173-303-806(4)(a)(viii)
Chapter 11, Closure Plan	N/A	N/A	Updated to incorporate addition of EMF to the WTP	173-303-806(4)(a)(xiii)
Appendix 7.5 – Civil, Structural, and Architectural Criteria and Typical Design Details				
Permit Document- Secondary Containment Design	24590-WTP-PER-CSA-02-001	11	• To be incorporated into Appendix 7.5 (Replacing Rev. 10).	173-303-640(4)(c)
Appendix 7.7 – Engineering Specifications				
Engineering Specification for Field Applied Special Protective Coatings for	24590-WTP-3PS-AFPS-T0006	3	To be incorporated into Appendix 7.7 (Replacing Rev. 2).	173-303-640(3)(a) 173-303-806(4)(c)

Engineering Document Title	Document Number	Rev #	Remarks	WAC Requirement
Secondary Containment Areas				
Appendix 7.9 – Material Selection Documentation				
Permit Document- Material Selections for Building Secondary Containment/Leak Detection	24590-WTP-PER-M-02-001	4	To be incorporated into Appendix 7.9 (Replacing Rev. 3).	173-303-806(4)(c)
Appendix 13.1 – Process Flow Diagrams				
Process Flow Diagram- Direct Feed Effluent Transfer (System DEP)	24590-BOF-M5-V17T-00011	0	To be incorporated into Appendix 13.1 (New Document) Also included in 15-003.	173-303--640(3)(a) 173-303-806(4)(c)
Process Flow Diagram- Direct Feed Effluent Evaporator (System DEP)	24590-BOF-M5-V17T-00012	0	To be incorporated into Appendix 13.1 (New Document). Also included in 15-003.	173-303--640(3)(a) 173-303-806(4)(c)
Process Flow Diagram- Direct Feed Concentrate Transfer (System DEP and DVP)	24590-BOF-M5-V17T-00013	0	To be incorporated into Appendix 13.1 (New Document) Also included in 15-003.	173-303-640(3)(a) 173-303-806(4)(c)
Process Flow Diagram- Direct Feed Process Condensate Transfer (System DEP)	24590-BOF-M5-V17T-00014	0	To be incorporated into Appendix 13.1 (New Document) Also included in 15-003.	173-303--640(3)(a) 173-303-806(4)(c)
Appendix 13.2 – Piping & Instrument Diagrams (P&IDs)				
P&ID- BOF/EMF Direct Feed LAW EMF- Process System-	24590-BOF-M6-DEP-00001002	0	To be incorporated into Appendix 13.2	173-303-640(3)(a) 173-303-806(4)(c)

Engineering Document Title	Document Number	Rev #	Remarks	WAC Requirement
Low Point Drain Vessel Pumps DEP-PMP-00001A/B				
P&ID - BOF/EMF Direct Feed LAW EMF Process System- Process Area Sumps- DEP-SUMP-00002A/B	24590-BOF-M6-DEP-00009001	0	To be incorporated into Appendix 13.2	173-303-640-(3)(a) 173-303806(4)(c)
P&ID- BOF/EMF Direct Feed LAW EMF Process System Process Vessel Area Sumps- DEP-SUMP-00004A/B	24590-BOF-M6-DEP-00009002	0	To be incorporated into Appendix 13.2	173-303--640(3)(a) 173-303-806(4)(c)
P&ID- BOF/EMF Direct Feed LAW EMF Process System Miscellaneous Sumps- DEP-SUMP-00008	24590-BOF-M6-DEP-00009003	0	To be incorporated into Appendix 13.2	173-303-640-(3)(a) 173-303806(4)(c)
P&ID- BOF/EMF Direct Feed LAW EMF Process System Process Area Sumps- DEP-SUMP-00003A/B	24590-BOF-M6-DEP-00009004	0	To be incorporated into Appendix 13.2	173-303-640-(3)(a) 173-303806(4)(c)
P&ID – BOF/EMF Direct Feed LAW EMF Process Vessel Area Sumps- DEP-SUMP-00005A/B	24590-BOF-M6-DEP-00009005	0	To be incorporated into Appendix 13.2	173-303-640-(3)(a) 173-303-806(4)(c)
P&ID - BOF/EMF Direct Feed LAW EMF Process System Effluent Facility Leak	24590-BOF-M6-DEP-00011001	0	To be incorporated into Appendix 13.2	173-303-640-(3)(a) 173-303806(4)(c)

Engineering Document Title	Document Number	Rev #	Remarks	WAC Requirement
Document Change Notice-Miscellaneous Changes to Low Point Drain Vessel P&ID	24590-BOF-M6N-DEP-00001 (issued against 24590-BOF-M6-DEP-00001002).	0	To be incorporated into Appendix 13.2	
Document Change Notice-Miscellaneous Title Changes and Removal of Auto/Manual on DEP-YC-8650	24590-BOF-M6N-DEP-00007 (Issued against 24590-BOF-M6-DEP-00009001/9003/9005)	0	To be Incorporated into 13.2	
Document Change Notice-Addition, Removal, and Revision of Offsheet Connectors for Leak Detection (Issued against P&ID-BOF/EMF Direct Feed LAW EMF Process System Effluent Facility Leak	24590-BOF-M6N-J21T-00002 (Issued against 24590-BOF-M6-DEP-00011001)	0	To be incorporated into Appendix 13.2.	
Appendix 13.4 – General Drawings				
General Arrangement Plan – Balance of Facilities LAW Effluent Process Bldg and LAW Effluent Drain Tank Bldg General Arrangement Plan at Elev 0 FT - 0 IN	24590-BOF-P1-25-00001	0	To be incorporated into Appendix 13.4 (New document).	173-303-640(3)(a) 173-303-806(4)(c)
Appendix 13.11 – Independent, Qualified, Registered Professional Engineer (IQRPE) Reports				
IQRPE Independent Assessment Report	24590-CM-HC4-HXYG-00240-02-0017	0	To be incorporated into Appendix 13.11	173-303-640(3)(a) 173-303-806(4)(c)

Engineering Document Title	Document Number	Rev #	Remarks	WAC Requirement
Appendix 13.13 – Instrument Control Logic and Narrative Description				
Permit Document- System Logic Description for the Direct Feed LAW Effluent Management Facility Process System (DEP)	24590-BOF-PER-J-16-001	0	To be incorporated into Appendix 13.13	173-303-640(4)(c) 173-303-806(4)(c)
Appendix 13.18 – Operating Documents				
Permit Document- Leak Detection Capability for EMF Facility	24590-BOF-PER-M-16-001	0	To be incorporated into Appendix 13.18.	173-303-806(4)(c)
Permit Document- Dangerous Waste Permit (DWP) Liner Heights in the Effluent Management Facility (EMF)	24590-BOF-PER-M-16-003	0	To be incorporated into Appendix 13.18	173-303-806(4)(c)
Permit Document- Waste Removal Capacity for the Direct Feed LAW Effluent Management Facility (EMF)	24590-BOF-PER-M-16-002	0	To be incorporated into Appendix 13.18	173-303-806(4)(c)

Engineering Document Title	Document Number	Rev #	Remarks	WAC Requirement
Administrative Record				
Permit Document-Prevention of Hydrogen Accumulation in WTP Tank Systems and Miscellaneous Treatment Unit Systems	24590-WTP-PER-PR-03-001	2	To be incorporated into Administrative Record. (Replacing Rev. 1).	
Effluent Management Facility Process Flow Diagrams Process Stream Tables (System DEP and DVP)	24590-BOF-M3-V17T-00001002	0	To be incorporated into Administrative Record	
Overview of the Effluent Management Facility Process Design (Mass Balance)	CCN 293458 (Superseding 290073 and 29401)	NA	To be incorporated into Administrative Record.	
Effluent Management Facility Process Flow Diagrams Process Stream Tables (System DEP and DVP)	24590-BOF-M3-V17T-00001001	0	To be incorporated into Administrative Record	

Bechtel National, Inc. Certification

The following certification statement is provided consistent with Contract No. DE-AC27-01RV14136, Section H.26, Environmental Permits, paragraph (g) for the submittal of the Hanford Facility Resource Conservation and Recovery Act Permit Modification 24590-BOF-PCN-ENV-15-002, Secondary Containment (EMF Tanks and Miscellaneous Units).

I certify under penalty of law that this document and all attachments were prepared under my direction or supervision in accordance with a system designed to assure that qualified personnel properly gather and evaluate the information submitted. Based on my inquiry of the person or persons who manage the system, or those persons directly responsible for gathering the information, the information submitted is, to the best of my knowledge and belief, true, accurate, and complete. I am aware that there are significant penalties for submitting false information, including the possibility of fine and imprisonment for knowing violations.

Margaret G. McCullough — 11/16/16

M. G. McCullough
Project Director

Date

U.S. Department of Energy, Office of River Protection Certification

The following certification statement is provided for the submittal of the Hanford Facility Resource Conservation and Recovery Act Permit Modification Notification 24590-BOF-PCN-ENV-15-002.

I certify under penalty of law that this document and all attachments were prepared under my direction or supervision in accordance with a system designed to assure that qualified personnel properly gather and evaluate the information submitted. Based on my inquiry of the person or persons who manage the system, or those persons directly responsible for gathering the information, the information submitted is, to the best of my knowledge and belief, true, accurate, and complete. I am aware that there are significant penalties for submitting false information, including the possibility of fine and imprisonment for knowing violations.

K. W. Smith

Kevin W. Smith, Manager
U.S. Department of Energy,
Office of River Protection

12/20/16

Date

Quarter Ending 12/31/2016 24590-BOF-PCN-ENV-15-002

Hanford Facility RCRA Permit Modification Notification Form
Part III, Operating Unit 10
Waste Treatment and Immobilization Plant

Index

Page 2 of 3: Hanford Facility RCRA Permit, Part III, Operating Unit 10, Waste Treatment and Immobilization Plant

Add newly issued permit documents, and update existing permit documents, found in various Appendices of the Waste Treatment and Immobilization Plant (WTP) Dangerous Waste Permit (DWP) and Administrative Record. Update the existing WTP DWP Chapters and Appendices to describe design/process modifications needed to support the new Direct Feed LAW (DFLAW) configuration. Add a new appendix in WTP DWP Chapter 4 to describe the new Effluent Management Facility (EMF) and DFLAW configuration to support the design and construction of the EMF Tanks and Miscellaneous Units Secondary Containment requirements. Add a new appendix to the WTP DWP to include documents associated with EMF/DFLAW configuration.

Submitted by Co-Operator:

Roger J. Landon 11/8/16
Roger J. Landon Date

Reviewed by ORP Program Office:

J. F. Grindstaff 11/8/16
J. F. Grindstaff Date

Quarter Ending 12/31/2016 24590-BOF-PCN-ENV-15-002

Hanford Facility RCRA Permit Modification Notification Form	
Unit: **Waste Treatment and Immobilization Plant**	Permit Part: **Part III, Operating Unit 10**

Quarter Ending 12/31/2016 24590-BOF-PCN-ENV-15-002

Description of Modification:

The purpose of this Class 3 Permit Change Notice (PCN) is to update the Waste Treatment and Immobilization Plant (WTP) Dangerous Waste Permit (DWP) Chapters and Appendices to support the new Direct Feed Low-Activity Waste (DFLAW) configuration, which includes a new facility, the Effluent Management Facility (EMF). In addition, new WTP DWP Chapter 4 Appendix 4G will be added along with WTP DWP Appendix 13.

The EMF will include new DWP Tanks and Miscellaneous Units, including associated ancillary equipment and secondary containment. In addition, the Low-Activity Waste (LAW) Facility, Analytical Laboratory (Lab), and Balance of Facilities (BOF) engineering documents and DWP permit chapters will be updated to accommodate the new configuration.

The PCN will add several new engineering documents, including an Independent, Qualified, Registered Professional Engineer (IQRPE) report, a General Arrangement Plan, several Process Flow Diagrams, several Piping & Instrumentation Diagrams, and several Permit Documents. In addition, the PCN will include revisions to previously issued Permit Documents and an existing Engineering Specification. An Overview of the Effluent Management Facility Process Design (Mass Balance) will be entered into the administrative record. This PCN updates or adds new information in WTP DWP Appendices 7.5, 7.7, 7.9 to reflect current design. In addition, Appendix 13 will be added to the WTP DWP. It will contain documents associated with the EMF and DFLAW configuration. Documents will be added to:

- Appendix 13.1 (Process Flow Diagrams)
- Appendix 13.2 (Piping and Instrumentation Diagrams)
- Appendix 13.4 (General Arrangement Drawing)
- Appendix 13.11 (Independent, Qualified, Registered Professional Engineer Report)
- Appendix 13.13 (Instrument Control Logic and Narrative Description)
- Appendix 13.18 (Operating Documents)

This PCN includes newly issued and revised Chapters and Appendices associated with the WTP DWP.

Revisions will occur to the following DWP Chapters and Appendices:

- Chapter 1- Part A Form
- Chapter 2- Topographic Map
- Chapter 3, Appendix 3A- Waste Analysis Plan
- Chapter 3 Appendix 3B- Quality Assurance Project Plan
- Chapter 4- Process Information
- Chapter 4, Appendix 4A- Figures and Drawings
- Chapter 4, Appendix 4E- Low-Activity Waste (LAW) Vitrification Facility
- Chapter 4, Appendix 4H- Analytical Laboratory (Lab)
- Chapter 4, Appendix 4I- Balance of Facilities
- Chapter 6- Procedures to Prevent Hazards
- Chapter 6, Appendix 6A- Inspection Schedule
- Chapter 7- Contingency Plan
- Chapter 7, Appendix 7A- Emergency Response
- Chapter 8- Personnel Training
- Chapter 11- Closure Plan

In addition, Chapter 4 Appendix 4G will be added to include information on the EMF and DFLAW configuration.

Information on the documents included in this PCN is located in the table below.

Appendix 7.5- Civil, Structural, and Architectural Criteria and Typical Design Details			
Replace	24590-WTP-PER-CSA-02-001, Rev.10	With	24590-WTP-PER-CSA-02-001, Rev.11
Appendix 7.7- Engineering Specifications			

Quarter Ending 12/31/2016 24590-BOF-PCN-ENV-15-002

Replace	24590-WTP-3PS-AFPS-T0006, Rev.2	With	24590-WTP-3PS-AFPS-T0006, Rev.3
Appendix 7.9- Material Selection Documentation			
Replace	24590-WTP-PER-M-02-001, Rev.3	With	24590-WTP-PER-M-02-001, Rev.4
Appendix 13.1- Process Flow Diagrams			
Add	24590-BOF-M5-V17T-00011, Rev.0		
Add	24590-BOF-M5-V17T-00013, Rev.0		
Add	24590-BOF-M5-V17T-00012, Rev.0		
Add	24590-BOF-M5-V17T-00014, Rev.0		
Appendix 13.2- Piping and Instrumentation Diagrams (P&IDs)			
Add	24590-BOF-M6-DEP-00001002, Rev.0		
Add	24590-BOF-M6-DEP-00009001, Rev.0		
Add	24590-BOF-M6-DEP-00009002, Rev.0		
Add	24590-BOF-M6-DEP-00009003, Rev.0		
Add	24590-BOF-M6-DEP-00009004, Rev.0		
Add	24590-BOF-M6-DEP-00009005, Rev.0		
Add	24590-BOF-M6-DEP-00011001, Rev.0		
Add	24590-BOF-M6N-DEP-00007 (Issued against 24590-BOF-M6-DEP-00009001/9003/9005)		
Add	24590-BOF-M6N-J21T-00002 (Issued against 24590-BOF-M6-DEP-00011001)		
Add	24590-BOF-M6N-DEP-00001 (issued against 24590-BOF-M6-DEP-00001002)		
Appendix 13.4- General Arrangement Drawings			
Add	24590-BOF-P1-25-00001, Rev.0		
Appendix 13.11 - Independent, Qualified, Registered Professional Engineer (IQRPE) Reports			
Add	24590-CM-HC4-HXYG-00240-02-00017, Rev. 0		
Appendix 13.13- Instrument Control Logic and Narrative Description			
Add	24590-BOF-PER-J-16-001, Rev.0		
Appendix 13.18- Operating Documents			
Add	24590-BOF-PER-M-16-001, Rev.0		
Add	24590-BOF-PER-M-16-003, Rev.0		
Add	24590-BOF-PER-M-16-002, Rev.0		
Administrative Record			
Replace	24590-WTP-PER-PR-03-001, Rev.1	With	24590-WTP-PER-PR-03-001, Rev.2
Add	24590-BOF-M3-V17T-00001002, Rev. 0		
Add	CCN 293458 (Mass Balance)		
Add	24590-BOF-M3-V17T-00001001, Rev. 0		
Chapter 1- Part A Form			
Replace	Dangerous Waste Permit Application Part A Form, Rev. 2	With	Dangerous Waste Permit Application Part A Form, Rev. 3
Chapter 2- Topographic Map			
Remove	Chapter 2 Topographic Map		
Add	Figure 2A-1		

Quarter Ending 12/31/2016 24590-BOF-PCN-ENV-15-002

Add	Figure 2A-2		
Add	Figure 2A-3		
Appendix 3A- Waste Analysis Plan			
Replace	Appendix 3A Waste Treatment Plant Waste Analysis Plan	With	Appendix 3A Waste Treatment Plant Waste Analysis Plan
Appendix 3B- Quality Assurance Project Plan			
Replace	Appendix 3B Quality Assurance Project Plan	With	Appendix 3B Quality Assurance Project Plan
Chapter 4- Process Information			
Replace	Chapter 4 Process Information	With	Chapter 4 Process Information
Chapter 4, Appendix 4A- Figures and Drawings			
Replace	Appendix 4A Figures and Drawings	With	Figure 4A Figures and Drawings
Chapter 4, Appendix 4E- Low-Activity Waste (LAW) Vitrification Facility			
Replace	Appendix 4E Low-Activity Waste Vit. Facility	With	Appendix 4E Low-Activity Waste Vit. Facility
Chapter 4, Appendix 4G- Direct Feed Low-Activity Waste (EMF)			
Add	Direct Feed Low-Activity Waste (EMF)		
Chapter 4, Appendix 4H- Analytical Laboratory			
Replace	Appendix 4H Analytical Laboratory	With	Appendix 4H Analytical Laboratory
Chapter 4, Appendix 4I- Balance of Facilities			
Replace	Appendix 4I Balance of Facilities	With	Appendix 4I Balance of Facilities
Chapter 6 – Procedures to Prevent Hazards			
Replace	Chapter 6 Procedures to Prevent Hazards	With	Chapter 6 Procedures to Prevent Hazards
Appendix 6A- Inspection Schedule			
Replace	Appendix 6A Inspection Schedule	With	Appendix 6A Inspection Plan
Chapter 7 – Contingency Plan			
Replace	Chapter 7 Contingency Plan	With	Chapter 7 Contingency Plan
Appendix 7A- Emergency Response Plan			
Remove	Appendix 7A Emergency Response Plan		
Chapter 8- Personnel Training			
Replace	Chapter 8 Personnel Training	With	Chapter 8 Personnel Training
Chapter 11- Closure Plan			
Replace	Chapter 11 Closure Plan	With	Chapter 11 Closure Plan

24590-WTP-PER-CSA-02-001:

- Added Figure 17 - Typical Details; Waterstops; EMF Buildings
- Added Figure 18 - Typical Details; Liner Plate and Grillage Support Details; EMF Buildings
- Added Figure 19 - Typical Details; Equipment Support and Ring Beam; EMF Buildings
- Added Figure 20 - Typical Details; Sumps; EMF Buildings
- Added Figure 21 - Typical Details; Wall Penetrations; EMF Buildings
- Added Figure 22 - Typical Details; Embed Plate, Stanchion Support, Subchange Room Interface; EMF Buildings
- Revised Sections 1 and 2 to include EMF related content

24590-WTP-3PS-AFPS-T0006:

Modified to incorporate 24590-WTP-FC-C-16-0090 by design

- Revised Section 7.5.2.1 to: When defects are in the finish coat, all areas sanded must be overcoated per the required dry film thickness in Appendix C Table 2 of this specification.

24590-WTP-PER-M-02-001:

- Clarified transfer lines source term and added AEA statement

24590-BOF-M5-V17T-00011

- Newly issued Process Flow Diagram for the Direct Feed Effluent Transfer System showing details of DEP-VSL-00001, DEP-VSL-00002, and DEP-VSL-00004A/B

24590-BOF-M5-V17T-00012

- Newly issued Process Flow Diagram for the Direct Feed Effluent Transfer System showing details of DEP-EVAP-00001, DEP-RBLR-00001, and associated pumps, filters, and condensers.

24590-BOF-M5-V17T-00013

- Newly issued Process Flow Diagram for the Direct Feed Effluent Transfer System showing details of DEP-VSL-00003A/B/C and associated pumps, preheaters, and primary/secondary HEPA filters

24590-BOF-M5-V17T-00014

- Newly issued Process Flow Diagram for the Direct Feed Effluent Transfer System showing details of DEP-VSL-00005A/B and associated pumps and filters.

24590-BOF-M6-DEP-00001002, 24590-BOF-M6-DEP-00009001, 24590-BOF-M6-DEP-00009002, 24590-BOF-M6-DEP-00009003. 24590-BOF-M6-DEP-00009004, 24590-BOF-M6-DEP-00009005, and 24590-BOF-M6-DEP-00011001

- Newly issued Piping & Instrumentation Diagrams for the DFLAW configuration/EMF process area sumps, pumps, filters, leak detection boxes and miscellaneous sumps.

24590-BOF-M6N-J21T-00002 (Issued Against 24590-BOF-M6-DEP-00011001)

- Drawing Change Notice- Miscellaneous changes to low-point drain vessel P&ID.

24590-BOF-M6N-DEP-00007 (Issued against 24590-BOF-M6-DEP-00009001/9003/9005)

- Drawing Change Notice- Miscellaneous title changes and removal of excess valve and pump references.

24590-BOF-M6N-DEP-00001 (issued against 24590-BOF-M6-DEP-00001002)

- Drawing Change Notice – Addition, removal and revision of offsheet connectors for leak detection.

24590-BOF-P1-25-00001

- Newly issued General Arrangement Plan at Elevation 0'0" showing the LAW Effluent Process Building and LAW Effluent Drain Tank Building.

24590-CM-HC4-HXYG-00240-02-00017

- Newly issued IQRPE Structural Integrity Assessment Report assessing the EMF secondary containment.

24590-BOF-PER-J-16-001

- Newly issued Permit Document describing the instrument control logic for sumps/pumps in the DFLAW EMF Process (DEP) System in the LAW effluent process and drain tank buildings.

24590-BOF-PER-M-16-001

- Newly issued Permit Document describing the EMF secondary containment system leak detection capabilities.

24590-BOF-PER-M-16-002

- Newly issued Permit Document describing the EMF waste removal criteria for the tank systems and miscellaneous unit systems secondary containment.

24590-BOF-PER-M-16-003

- Newly issued Permit Document describing the required EMF liner heights for the tank systems and miscellaneous unit systems secondary containment.

24590-WTP-PER-PR-03-001

- Revised to include Direct Feed Law operations

CCN 293458

- Newly issued Permit Document to provide an overview of the EMF process design.

24590-BOF-M3-V17T-00001002

- Newly issued Process Stream Table to support CCN 293458

24590-BOF-M3-V17T-00001001

- Newly issued Process Stream Table to support CCN 293458

Chapter 1 Dangerous Waste Permit Application Part A Form:

- Updated Part A language
- Added information on EMF Tanks and Miscellaneous Units

Chapter 2 Topography Map:

- Added EMF information
- Updated information on Figures 2A-2, 2A-2, and 2A-3

Appendix 3A Waste Treatment Plant Waste Analysis Plan:

- Updated waste analysis and analytical data language to include DFLAW configuration/EMF information
- Replaced current Revision 8C WAP version with 2013 Washington Department of Ecology Dangerous Waste Permit Application Requirements, publication 95-402 template
- Made text changes to improve clarity

Appendix 3B Appendix B Quality Assurance Project Plan:

- Updated quality assurance project plan language to include DFLAW configuration/EMF information
- Replaced current Revision 8C QAPP version with 2013 Washington Department of Ecology Dangerous Waste Permit Application Requirements, publication 95-402 template
- Made text changes to improve clarity

Chapter 4 Process Description:

- Updated to include DFLAW configuration/EMF information

- Made text changes to improve clarity and add additional operating information

Appendix 4A Figures and Drawings
- Updated Figures 4A-1 and 4A-3

Appendix 4E LAW:
- Updated to include DFLAW configuration/EMF information
- Made text changes to improve clarity and add additional operating information

Appendix 4G EMF:
- Added to include DFLAW configuration/EMF information

Appendix 4H Lab:
- Updated to include DFLAW configuration/EMF information
- Made text changes to improve clarity and add additional operating information

Appendix 4I BOF:
- Updated to include DFLAW configuration/EMF information
- Made text changes to improve clarity and add additional operating information

Chapter 6 Procedures to Prevent Hazards:
- Updated security, preparedness and prevention requirements, structures, and equipment language
- Replaced current Revision 8C Chapter 6 version with 2013 Washington Department of Ecology Dangerous Waste Permit Application Requirements, publication 95-402 template
- Updated to include DFLAW configuration/EMF information
- Made text changes to improve clarity and add additional operating information

Appendix 6A Inspection Schedule:
- Updated for inspection schedules and inspection tables
- Replaced current Revision 8C Chapter 6A version with 2013 Washington Department of Ecology Dangerous Waste Permit Application Requirements, publication 95-402 template
- Updated to include DFLAW configuration/EMF information
- Made text changes to improve clarity and add additional operating information

Chapter 7 Contingency Plan
- Replaced Revision 8C version with 2013 Washington Department of Ecology Dangerous Waste Permit Application Requirements, publication 95-402 template.
- Combined information from Appendix 7A into Chapter 7.
- Updated to include DFLAW configuration/EMF information
- Made text changes to improve clarity

Appendix 7A Emergency Response Plan:
- Removed entire Appendix 7A as information from Appendix 7A was added into Chapter 7

Chapter 8 Personnel Training:
- Updated training language
- Replaced current Revision 8C Chapter 8 version with 2013 Washington Department of Ecology Dangerous Waste Permit Application Requirements, publication 95-402 template
- Updated to include DFLAW configuration/EMF information
- Made text changes to improve clarity

Chapter 11 Closure Plan:

- Updated to include DFLAW configuration/EMF information
- Made text changes to improve clarity

This DWP component may be re-evaluated to confirm design adequacy. If the re-evaluation results in future design changes, the changes will be reviewed by Ecology in subsequent permit modifications.

WAC 173-303-830 Modification Class:	Class 1	Class [1]1	Class 2	Class 3
Please mark the Modification Class:				X

Enter relevant WAC 173-303-830, Appendix I Modification citation number: WAC 173-303-830 Appendix I G.5.a Enter wording of WAC 173-303-830, Appendix I Modification citation: "That require additional or different management practices, tank design, different fire protection specifications, or significantly different tank treatment process from that authorized in the permit"	
Modification Approved/Concur: ☐ Yes ☐ Denied (state reason below) Reason for denial:	Reviewed by Ecology: S. Dahl Date

WASHINGTON STATE DEPARTMENT OF ECOLOGY

Dangerous Waste Permit Application Part A Form

Date Received	Reviewed by:	Date:
Month Day Year	Approved by:	Date:

I. This form is submitted to: (place an "X" in the appropriate box)

☒	**Request modification to a final status permit (commonly called a "Part B" permit)**
☐	**Request a change under interim status**
☐	**Apply for a final status permit. This includes the application for the initial final status permit for a site or for a permit renewal (i.e., a new permit to replace an expiring permit).**
☐	**Establish interim status because of the wastes newly regulated on:** (Date)
	List waste codes:

II. EPA/State ID Number

W	A	7	8	9	0	0	0	8	9	6	7

III. Name of Facility

US Department of Energy – Hanford Facility

IV. Facility Location (Physical address not P.O. Box or Route Number)

A. Street

Refer to Permit Attachment 2 – Hanford Facility Permit Legal Description

City or Town	State	ZIP Code
Near Richland	WA	

County Code (if known)	County Name
005	Benton

B. Land Type	C. Geographic Location Latitude (degrees, mins, secs)	Longitude (degrees, mins, secs)	D. Facility Existence Date Month Day Year
F	Refer to TOPO Map (Section XV.)		11 19 1980

V. Facility Mailing Address

Street or P.O. Box

P.O. Box 450

City or Town	State	ZIP Code
Richland	WA	99352

VI. Facility contact (Person to be contacted regarding waste activities at facility)		
Name (last)	**(first)**	
Smith	Kevin	
Job Title	**Phone Number (area code and number)**	
Manager	(509) 372-2315	
Contact Address		
Street or P.O. Box		
P.O. Box 450		
City or Town	**State**	**ZIP Code**
Richland	WA	99352

VII. Facility Operator Information		
A. Name	**Phone Number (area code and number)**	
Department of Energy Owner/Operator Bechtel National, Inc. Co-Operator for WTP*	(509) 372-2315 (509) 371-2220*	
Street or P.O. Box		
P.O. Box 450 2435 Stevens Center Place *		
City or Town	**State**	**ZIP Code**
Richland	WA	99352 99354*

B. Operator Type	F
C. Does the name in VII.A reflect a proposed change in operator?	☐ Yes ☒ No
If yes, provide the scheduled date for the change:	**Month** **Day** **Year**
D. Is the name listed in VII.A. also the owner? If yes, skip to Section VIII.C.	☐ Yes ☒ No

Footnote From Section VII

* Asterisk indicates information for Bechtel National, Inc., the Co-Operator for WTP

VIII. Facility Owner Information		
A. Name	**Phone Number (area code and number)**	
U.S. Department of Energy Owner/Operator	(509) 372-2315	
Street or P.O. Box		
P.O. Box 450		
City or Town	**State**	**ZIP Code**
Richland	WA	99352

B. Owner Type	F
C. Does the name in VIII.A reflect a proposed change in owner?	☐ Yes ☒ No
If yes, provide the scheduled date for the change:	**Month** **Day** **Year**

IX. NAICS Codes (5/6 digit codes)													
A. First							**B. Second**						
5	6	2	2	1	1	Waste Treatment & Disposal	9	2	4	1	1	0	Administration of Air & Water Resource & Solid Waste Management Programs

X. Other Environmental Permits (see instructions)

A. Permit Type			B. Permit Number												C. Description
	E		N	O	C		I	D		6	2	5			WAC 246-247, NOC Approval Rad Air (HLW)
	E		N	O	C		I	D		6	2	6			WAC 246-247, NOC Approval Rad Air (LAB)
	E		N	O	C		I	D		6	2	7			WAC 246-247, NOC Approval Rad Air (LAW)
	E		N	O	C		I	D		6	2	8			WAC 246-247, NOC Approval Rad Air (PTF)
	E		N	O	C		I	D		9	4	7			WAC 246-247, NOC Approval Rad Air (Unplanned)
	E		E	P	A		A	p	p	r	o	v	a	l	40 CFR 61, NOC Approval Radioactive Air
	E		D	E	0	1	N	W	P	-	0	0	3		WAC 173-400/-460, Non-Radioactive Air Approval
	E		D	E	0	2	N	W	P	-	0	0	2		WAC 173-400/-460, Non-Radioactive Air Approval
	E		D	E	0	7	N	W	P	-	0	0	4		WAC 173-400-/460, Non-Radioactive Air Approval
	P		P	S	D	-	0	2	-	0	1				WAC 173-400 Prevention of Significant Deterioration
	E		A	O	P	0	0	-	0	5	-	0	0	6	WAC 173-401, Hanford Site Air Operating Permit
	E		W	A	G	-	5	0	-	5	1	8	0		WAC 173-220/-216, Sand and Gravel General Permit
	E		W	A	G	-	5	0	-	5	1	8	1		WAC 173-220/-216, Sand and Gravel General Permit
	E		S	T	0	0	0	4	5	1	1				WAC 173-216, State Waste Discharge Permit
	E		H	A	N	0	0	9							WAC 246-272A, Large On-Site Sewage Systems
	E		H	A	N	0	1	3							WAC 246-272B, Large On-Site Sewage Systems
	E		T	S	C	A	2	0	0	0	0	8	3	1	40 CFR 761.61(c) TSCA approval Dated August 31, 2000.

XI. Nature of Business (provide a brief description that includes both dangerous waste and non-dangerous waste areas and activities)

Bechtel National Inc. (BNI) is in the process of constructing the Waste Treatment Immobilization Plant (WTP); the WTP is permitted as Operating Group 10 under the Dangerous Waste Permit (DWP) Number WA7890008967. Currently, six (6) major facilities are being designed and constructed; the Low-Activity Waste (LAW) Facility, the High-Level Waste (HLW) Facility, the Pretreatment (PT) Facility, the Laboratory (Lab) Facility, the Balance of Facilities (BOF), and the Effluent Management Facility (EMF). During dangerous waste management operations, the WTP will chemically separate, treat, and immobilize radioactive and dangerous (mixed) waste through vitrification.

During mixed waste treatment operations, WTP will utilize two separate configurations. The first configuration, known as the Direct Feed LAW configuration, will allow mixed waste to be transferred directly from the Low-Activity Waste Pretreatment System (LAWPS) to the LAW Facility, bypassing the PT Facility. The low-activity waste will then be treated in the LAW Facility using the vitrification process. Effluents generated during the process will be treated in the EMF. In the second configuration, known as the baseline configuration, tank waste will be sent directly from the Tank Farms to the PT Facility. The mixed waste will then be pretreated and sent to either the HLW Facility or the LAW Facility, depending on the waste characterization. In both configurations, waste will be characterized prior to receipt at the WTP. The waste will only be transferred to WTP if it meets WTP's waste acceptance criteria. While operating in the Direct Feed LAW configuration, WTP will not accept and/or treat mixed waste that carries the D001 (ignitable) waste code and/or the D003 (reactive) waste code. While operating in the baseline configuration, WTP may accept mixed waste that carries the D001 (ignitable) waste code and/or the D003 (reactive) waste code. Once waste has been received, process knowledge will be used to remove the D001 and D003 waste codes. Waste initially characterized as reactive and/or ignatible will only be stored in dangerous waste management units designed for these waste codes.

Process Codes S01, S02, S06, T01, T04, and X99 utilized in Sections XII and XIII are described below.

(S01)

At the WTP, a total of six (6) container storage areas are permitted to store the dangerous/mixed waste in containers. Three (3) of the areas will be located in the HLW Facility, one (1) area will be located in the Lab, and two (2) areas are considered part of the

BOF. The LAW Facility and the EMF will not have permitted container storage areas. The dangerous or mixed waste generated at the EMF and the LAW Facility will be managed in 90-day accumulation areas and satellite accumulation areas pursuant to the generator requirements (WAC-173-303-200).

The 1,089,000 gallon Process Design Capacity for S01 listed in Section XII was calculated by multiplying the maximum surface area of all permitted container storage areas by the maximum waste container heights.

(S02)

A total of ninety-seven (97) tanks will be permitted to store dangerous/mixed waste. The PT Facility will have fifty-nine (59) tanks permitted to store dangerous/mixed waste; the LAW Facility will have twelve (12) tanks permitted to store dangerous/mixed waste; the HLW Facility will have fifteen (15) tanks permitted to dangerous/mixed waste, the EMF will have nine (9) tanks permitted to store dangerous/mixed waste, and the Lab will have two (2) tanks permitted to store treat dangerous/mixed waste.

The 5,717,000 gallon, which includes the EMF tank volume, Process Design Capacity for S02 in Section XII was calculated by summing up the total tank volumes. The total tank volumes are nominal and do not account for manufacturing tolerances, nozzles, and displacement of internals.

The nine (9) Direct Feed LAW Effluent Management Facility Process System (DEP) tanks/vessels that will be permitted for storage, and corresponding rooms are:

- DEP-VSL-00001-Low-point drain vessel (ED-8001)
- DEP-VSL-00002-Evaporator feed vessel (E-0105)
- DEP-VSL-00003A-Evaporator concentrate vessel (E-0105)
- DEP-VSL-00003B-Evaporator concentrate vessel (E-0105)
- DEP-VSL-00003C- Evaporator concentrate vessel (E-0105)
- DEP-VSL-00004A- Overhead sampling vessel (E-0106)
- DEP-VSL-00004B- Overhead sampling vessel (E-0106)
- DEP-VSL-00005A- Process condensate lag storage vessel (E-0106)
- DEP-VSL-00005B- Process condensate lag storage vessel (E-0106)

(S06)

A total of twenty-two (22) containment building areas are permitted to store dangerous/mixed waste at the WTP. The PT Facility will have five (5) areas permitted to store dangerous/mixed waste , the LAW Facility will have six (6) areas permitted to store dangerous/mixed waste , and the HLW Facility will have ten (10), areas permitted to store dangerous/mixed waste. EMF will not have any containment building areas.

The 712 cubic meters of containment building storage capacity for Process Design Code S06 in Section XII represents the maximum volume of dangerous/mixed waste that can be stored in all containment buildings which includes:

- areas where filled IHLW canisters (65.33 $m^{3)}$ and ILAW containers (109.42 m^3) are cooled and stored,
- areas where failed melters are temporarily stored (LAW 299.38 m^3) (HLW 121.94 m^3),
- areas where secondary wastes such as containers, uncontainerized process equipment, and various other items awaiting decontamination, treatment or repackaging are stored 115.8 m^3).

(T01)

A total of ninety-seven (97) tank treatment units will be permitted to treat dangerous/mixed waste at the WTP.

The 9,000 gal/day Process Design Capacity for the T01 process code in Section XII was cacluated using the baseline configuration where the volumetric flow from Tank Farms to the Pretreatment Facility where it is treated and sent to either the LAW Facility or HLW Facililty for vitrification. The volumetric flow is calculated by adding the feed rate for HLW feed (0.64 ft^3/min) and LAW feed (0.17 ft^3/min) and converting the rate to gallons per day.

The nine (9) Direct Feed LAW Effluent Management Facility Process System (DEP) tanks/vessels that will be permitted for treatment, and corresponding rooms are:

- DEP-VSL-00001-Low-point drain vessel (ED-8001)
- DEP-VSL-00002-Evaporator feed vessel (E-0105)
- DEP-VSL-00003A-Evaporator concentrate vessel (E-0105)

- DEP-VSL-00003B-Evaporator concentrate vessel (E-0105)
- DEP-VSL-00003C- Evaporator concentrate vessel (E-0105)
- DEP-VSL-00004A- Overhead sampling vessel (E-0106)
- DEP-VSL-00004B- Overhead sampling vessel (E-0106)
- DEP-VSL-00005A- Process condensate lag storage vessel (E-0106)
- DEP-VSL-00005B- Process condensate lag storage vessel (E-0106)

Although the nine EMF tanks were added as treatment units to the Process Total Number of Units in Section XII, the tanks are not considered in the Process Design Capacity, as the baseline configuration is considered to be a bounding scenario for tank treatment in WTP operations.

(T04)

A total of four (4) treatment units will be used to treat mixed waste through vitrification. The LAW Facility will have two (2) tanks (melters) and the HLW Facility will have (2) tanks (melters) permitted to treat the mixed waste via vitrification.

The 21,000 gal/day Process Design Capacity for T04 in Sections XII and XIII is based on the maximum rate that waste can be treated in all melters. The Process Design Capacity is additive and equal to the maximum volumetric flow into the HLW melters (1.52 ft^3/min) and LAW melters (0.42ft^3/min) melters after glass formers are added. The EMF will not have any treatment units. The combined volumetric flow is calculated by adding the flow rates of 1.52 ft^3/min and 0.42 ft^3/min then converting the rate to gallons per day for a total value of 20,898 gal/day rounded to 21,000 gal/day.

(X99)

A total of eighteen (18) miscellaneous units (MUs) will be permitted to manage the dangerous/mixed waste in EMF. These units are comprised of six (6) units involved in waste evaporation, four (4) filtration units, and eight (8) units associated with the vessel vent system.

The 600 gal/hour Process Design Capacity for the units involved in evaporation addressed under X99 in Sections XII and XIII is based on a maximum inflow feed rate of 10 gal/min multiplied by 60 min/hr for a feed rate of 600 gal/hr.

The six (6) units involved in waste evaporation that will be permitted, and corresponding rooms are:

- DEP-HX-00001- Evaporator concentrate/feed vessels LAW effluent cooler (E-0103)
- DEP-EVAP-00001-DEP Evaporator separator vessel (E-0103)
- DEP-COND-00001-DEP Evaporator primary condenser (E-0102)
- DEP-COND-00002-DEP Evaporator inter-condenser (E-0102)
- DEP-COND-00003- DEP Evaporator after-condenser (E-0102)
- DEP-RBLR-00001- DEP Evaporator reboiler (E-0103)

The 9,720 gallons/hr Process Design Capacity for units involved in filtration in Sections XII and XIII is based on the highest designed flowrate capacity of the filters, which is 162 gal/min for the DEP evaporator feed prefilter (DEP-FILT-00003) multiplied by 60 min/hr for a flowrate capacity of 9,720 gal/hr.

The four (4) filtration system units that will be permitted, and corresponding rooms are:

- DEP-FILT-00002-DEP Process condensate filter (E-0103)
- DEP-FILT-00003-DEP Evaporator feed prefilter (E-0103)
- DEP-FILT-00004A-DEP Condensate duplex cartridge filter (E-0102)
- DEP-FILT-00004B-DEP Condensate duplex cartridge filter (E0102)

The remaining eight (8) MUs are managed under the WTP air permits listed in Section X. These MUs associated with the Direct Feed LAW Effluent Management Facility Vessel Vent System (DVP), and corresponding rooms are:

- DVP-HEPA-00003A- Process ventilation primary HEPA filters (E-0102A)
- DVP-HEPA-00003B- Process ventilation primary HEPA filters (E-0102A)
- DVP-HEPA-00004A-Process ventilation secondary HEPA filters (E-0102A)

- DVP-HEPA-00004B- Process ventilation secondary HEPA filters (E-0102A)
- DVP-EXHR-00001A- Process ventilation exhausters (E-0102)
- DVP-EXHR-00001B- Process ventilation exhausters (E-0102)
- DVP-HTR-00001A- Process ventilation preheater (E-0102)
- DVP-HTR-00001B- Process ventilation preheater (E-0102)

Process Codes

S01 = Storage in containers
S02 = Tank storage
S06 = Containment building storage
T01 = Tank treatment
T04 = Other treatment (vitrification)
X99= Other Processes

EXAMPLE FOR COMPLETING ITEMS XII and XIII (shown in lines numbered X-1, X-2, and X-3 below): A facility has two storage tanks that hold 1200 gallons and 400 gallons respectively. There is also treatment in tanks at 20 gallons/hr. Finally, a one-quarter acre area that is two meters deep will undergo *in situ vitrification.*

Section XII. Process Codes and Design Capacities								Section XIII. Other Process Codes								
Line Number		A. Process Codes (enter code)			B. Process Design Capacity 1. Amount	B. Process Design Capacity 2. Unit of Measure (enter code)	C. Process Total Number of Units	Line Number		A. Process Codes (enter code)			B Process Design Capacity 1. Amount	B Process Design Capacity 2. Unit of Measure (enter code)	C. Process Total Number of Units	D. Process Description
X	**1**	**S**	**0**	**2**	**1,600**	**G**	**002**	**X**	**1**	**T**	**0**	**4**	**700**	**C**	**001**	**In situ vitrification**
X	**2**	**T**	**0**	**3**	**20**	**E**	**001**									
X	**3**	**T**	**0**	**4**	**700**	**C**	**001**									
	1	S	0	1	1,089,000	G	006		**1**	T	0	4	21,000	U	004	Vitrification
	2	S	0	2	5,717,000	G	097		**2**	X	9	9	600	E	006	Evaporation
	3	S	0	6	712	C	021		**5**	X	9	9	9,720	E	004	Filtration
	4	T	0	1	9,000	U	097									
	5	T	0	4	21,000	U	004									
	6	X	9	9	600	E	006									
	7	X	9	9	9,720	E	004									

XIV. Description of Dangerous Wastes

Example for completing this section: A facility will receive three non-listed wastes, then store and treat them on-site. Two wastes are corrosive only, with the facility receiving and storing the wastes in containers. There will be about 200 pounds per year of each of these two wastes, which will be neutralized in a tank. The other waste is corrosive and ignitable and will be neutralized then blended into hazardous waste fuel. There will be about 100 pounds per year of that waste, which will be received in bulk and put into tanks.

Line Number			A. Dangerous Waste No. (enter code)				B. Estimated Annual Quantity of Waste	C. Unit of Measure (enter code)	D. Processes (1) Process Codes (enter)									(2) Process Description [If a code is not entered in D (1)]
X	**1**		**D**	**0**	**0**	**2**	**400**	**P**	**S**	**0**	**1**	**T**	**0**	**1**				

X	**2**		**D**	**0**	**0**	**1**	**100**	**P**	**S**	**0**	**2**	**T**	**0**	**1**				
X	**3**		**D**	**0**	**0**	**2**												**Included with above**
		1	D	0	0	1	16,300	T	S	0	2							
		2	D	0	0	2		T	S	0	2	T	0	1				Included with above
		3	D	0	0	3		T	S	0	2							Included with above
		4	D	0	0	4		T	S	0	2	T	0	1				Included with above
		5	D	0	0	5		T										Included with above
		6	D	0	0	6		T										Included with above
		7	D	0	0	7		T										Included with above
		8	D	0	0	8		T										Included with above
		9	D	0	0	9		T										Included with above
		1	D	0	1	0		T										Included with above
	1	**1**	D	0	1	1		T										Included with above
	1	**2**	D	0	1	8		T										Included with above
	1	**3**	D	0	1	9		T										Included with above
	1	**4**	D	0	2	2		T										Included with above
	1	**5**	D	0	2	8		T										Included with above
	1	**6**	D	0	2	9		T										Included with above
	1	**7**	D	0	3	0		T										Included with above
	1	**8**	D	0	3	3		T										Included with above
	1	**9**	D	0	3	4		T										Included with above
	2	**0**	D	0	3	5		T										Included with above
	2	**1**	D	0	3	6		T										Included with above
	2	**0**	D	0	3	8		T										Included with above
	2	**2**	D	0	3	9		T										Included with above
	2	**3**	D	0	4	0		T										Included with above
	2	**4**	D	0	4	1		T										Included with above
	2	**5**	D	0	4	3		T										Included with above
	2	**6**	W	T	0	1		T										Included with above
	2	**7**	W	T	0	2		T										Included with above
	2	**8**	W	P	0	1		T										Included with above
	2	**9**	W	P	0	2		T										Included with above
	3	**0**	F	0	0	1		T										Included with above
	3	**1**	F	0	0	2		T										Included with above
	3	**2**	F	0	0	3		T										Included with above
	3	**3**	D	0	4	3		T										Included with above
	3	**4**	W	T	0	1		T										Included with above

	3	**5**	W	T	0	2		T										Included with above
	3	**6**	W	P	0	1		T										Included with above
	3	**7**	W	P	0	2		T										Included with above
	3	**8**	F	0	0	1		T										Included with above
	3	**9**	F	0	0	2		T										Included with above
	4	**0**	F	0	0	3		T										Included with above
	4	**1**	F	0	0	4		T										Included with above
	4	**2**	F	0	0	5		T										Included with above
	4	**3**	F	0	3	9*		T										Included with above
	4	**4**	D	0	0	2	50,700	T	S	0	1	T	0	4	S	0	6	Vitrification treatment process & storage of ILAW & IHLW
	4	**5**	D	0	0	4		T										Included with above
	4	**6**	D	0	0	5		T										Included with above
	4	**7**	D	0	0	6		T										Included with above
	4	**8**	D	0	0	7		T										Included with above
	4	**9**	D	0	0	8		T										Included with above
	5	**0**	D	0	0	9		T										Included with above
	5	**1**	D	0	1	0		T										Included with above
	5	**2**	D	0	1	1		T										Included with above
	5	**3**	D	0	1	8		T										Included with above
	5	**4**	D	0	1	9		T										Included with above
	5	**5**	D	0	2	2		T										Included with above
	5	**6**	D	0	2	8		T										Included with above
	5	**7**	D	0	2	9		T										Included with above
	5	**8**	D	0	3	0		T										Included with above
	5	**9**	D	0	3	3		T										Included with above
	6	**0**	D	0	3	4		T										Included with above
	6	**1**	D	0	3	5		T										Included with above
	6	**2**	D	0	3	6		T										Included with above
	6	**3**	D	0	3	8		T										Included with above
	6	**4**	D	0	3	9		T										Included with above
	6	**5**	D	0	4	0		T										Included with above
	6	**6**	D	0	4	1		T										Included with above
	6	**7**	D	0	4	3		T										Included with above
	6	**8**	W	T	0	1		T										Included with above
	6	**9**	W	T	0	2		T										Included with above
	7	**0**	W	P	0	1		T										Included with above
	7	**1**	W	P	0	2		T										Included with above

	7	**2**	F	0	0	1		T										Included with above
	7	**3**	F	0	0	2		T										Included with above
	7	**4**	F	0	0	3		T										Included with above
	7	**5**	F	0	0	4		T										Included with above
	7	**6**	F	0	0	5		T										Included with above
	7	**7**	F	0	3	9*		T										Included with above
	7	**8**	D	0	0	2	5,100	T	S	0	1	T	9	4	S	0	6	Treatment & storage of secondary waste other than ILAW containers and IHLW canisters
	7	**9**	D	0	0	4		T										Included with above
	8	**0**	D	0	0	5		T										Included with above
	8	**1**	D	0	0	6		T										Included with above
	8	**2**	D	0	0	7		T										Included with above
	8	**3**	D	0	0	8		T										Included with above
	8	**4**	D	0	0	9		T										Included with above
	8	**5**	D	0	1	0		T										Included with above
	8	**6**	D	0	1	1		T										Included with above
	8	**7**	D	0	1	8		T										Included with above
	8	**8**	D	0	1	9		T										Included with above
	8	**9**	D	0	2	2		T										Included with above
	9	**0**	D	0	2	8		T										Included with above
	9	**1**	D	0	2	9		T										Included with above
	9	**2**	D	0	3	0		T										Included with above
	9	**3**	D	0	3	3		T										Included with above
	9	**4**	D	0	3	4		T										Included with above
	9	**5**	D	0	3	5		T										Included with above
	9	**6**	D	0	3	6		T										Included with above
	9	**7**	D	0	3	8		T										Included with above
	9	**8**	D	0	3	9		T										Included with above
	9	**9**	D	0	4	0		T										Included with above
1	**0**	**0**	D	0	4	1		T										Included with above
1	**0**	**1**	D	0	4	3		T										Included with above
1	**0**	**2**	W	T	0	1		T										Included with above
1	**0**	**3**	W	T	0	2		T										Included with above
1	**0**	**4**	W	P	0	1		T										Included with above
1	**0**	**5**	W	P	0	2		T										Included with above
1	**0**	**6**	F	0	0	1		T										Included with above
1	**0**	**7**	F	0	0	2		T										Included with above
1	**0**	**8**	F	0	0	3		T										Included with above

1	**0**	**9**	F	0	0	4		T										Included with above
1	**1**	**0**	F	0	0	5		T										Included with above
1	**1**	**1**	F	0	3	9*		T										Included with above

Footnote From Section XIV

*F039 is a multisource leachate included as a waste derived from non-specific source wastes F001 through F005

*Waste codes for ignitability (D001) and reactivity (D003) apply only to the waste while it is in the pretreatment facility. LAW feed receipt FRP vessels and the HLW feed receipt vessel. Downstream of these vessels, the D001 and D003 waste codes are administratively removed from the project's waste streams.

XV. Map

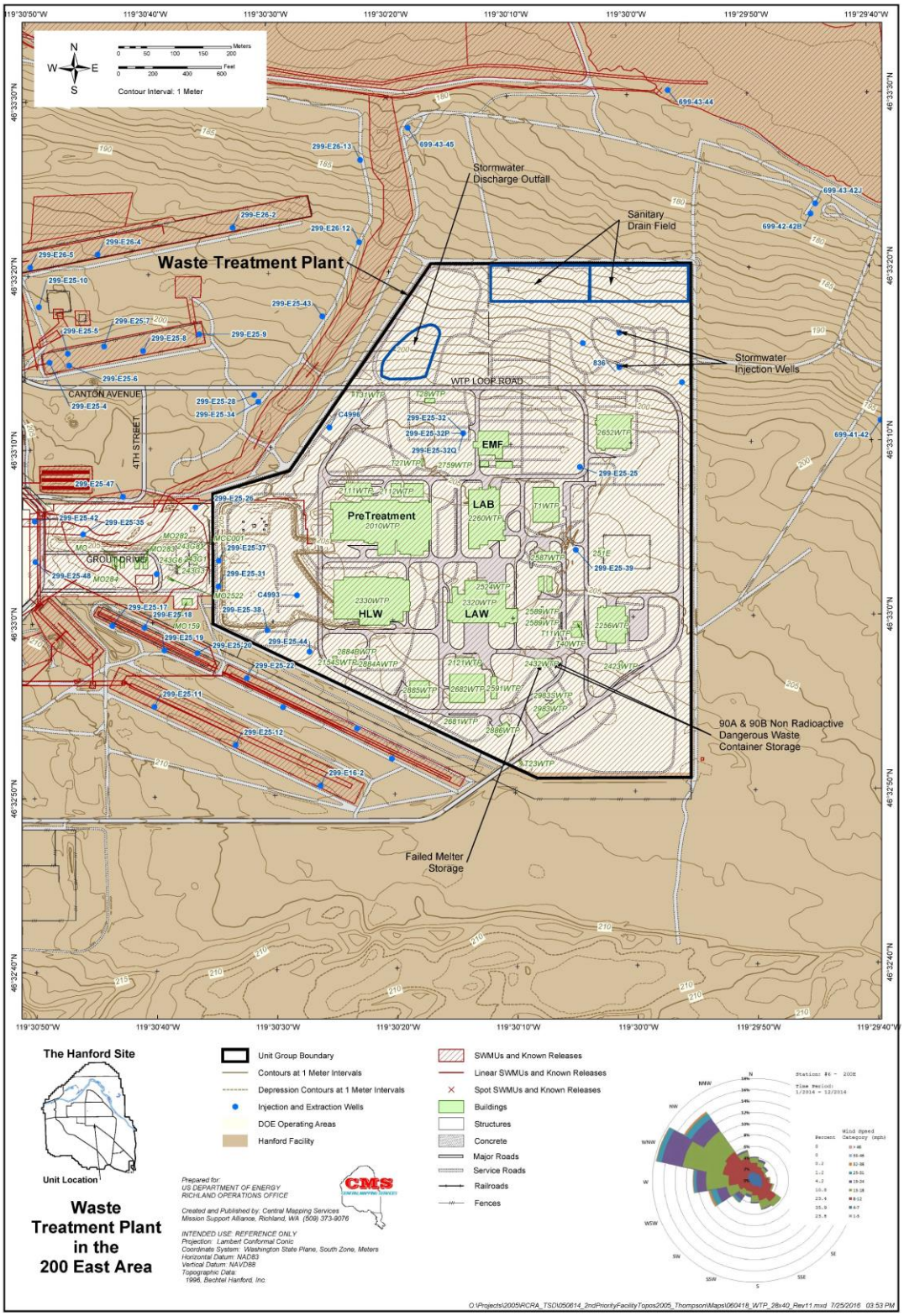
Waste Treatment Plant
Stormwater Discharge Outfall
Sanitary Drain Field
Stormwater Injection Wells
WTP LOOP ROAD
CANTON AVENUE
4TH STREET
EMF
LAB
PreTreatment
HLW
LAW
GROUT DRIMES
90A & 90B Non Radioactive Dangerous Waste Container Storage
Failed Melter Storage
Contour Interval: 1 Meter
The Hanford Site
Unit Location
Waste Treatment Plant in the 200 East Area
Unit Group Boundary
Contours at 1 Meter Intervals
Depression Contours at 1 Meter Intervals
Injection and Extraction Wells
DOE Operating Areas
Hanford Facility
SWMUs and Known Releases
Linear SWMUs and Known Releases
Spot SWMUs and Known Releases
Buildings
Structures
Concrete
Major Roads
Service Roads
Railroads
Fences
Prepared for:
US DEPARTMENT OF ENERGY
RICHLAND OPERATIONS OFFICE
Created and Published by: Central Mapping Services
Mission Support Alliance, Richland, WA (509) 373-9076
INTENDED USE: REFERENCE ONLY
Projection: Lambert Conformal Conic
Coordinate System: Washington State Plane, South Zone, Meters
Horizontal Datum: NAD83
Vertical Datum: NAVD88
Topographic Data:
1996, Bechtel Hanford, Inc.
O:\Projects\2005\RCRA_TSD\050614_2ndPriorityFacilityTopos2005_Thompson\Maps\060418_WTP_28x40_Rev11.mxd 7/25/2016 03:53 PM

XVI. Facility Drawing

All existing facilities must include a scale drawing of the facility (refer to Instructions for more detail).

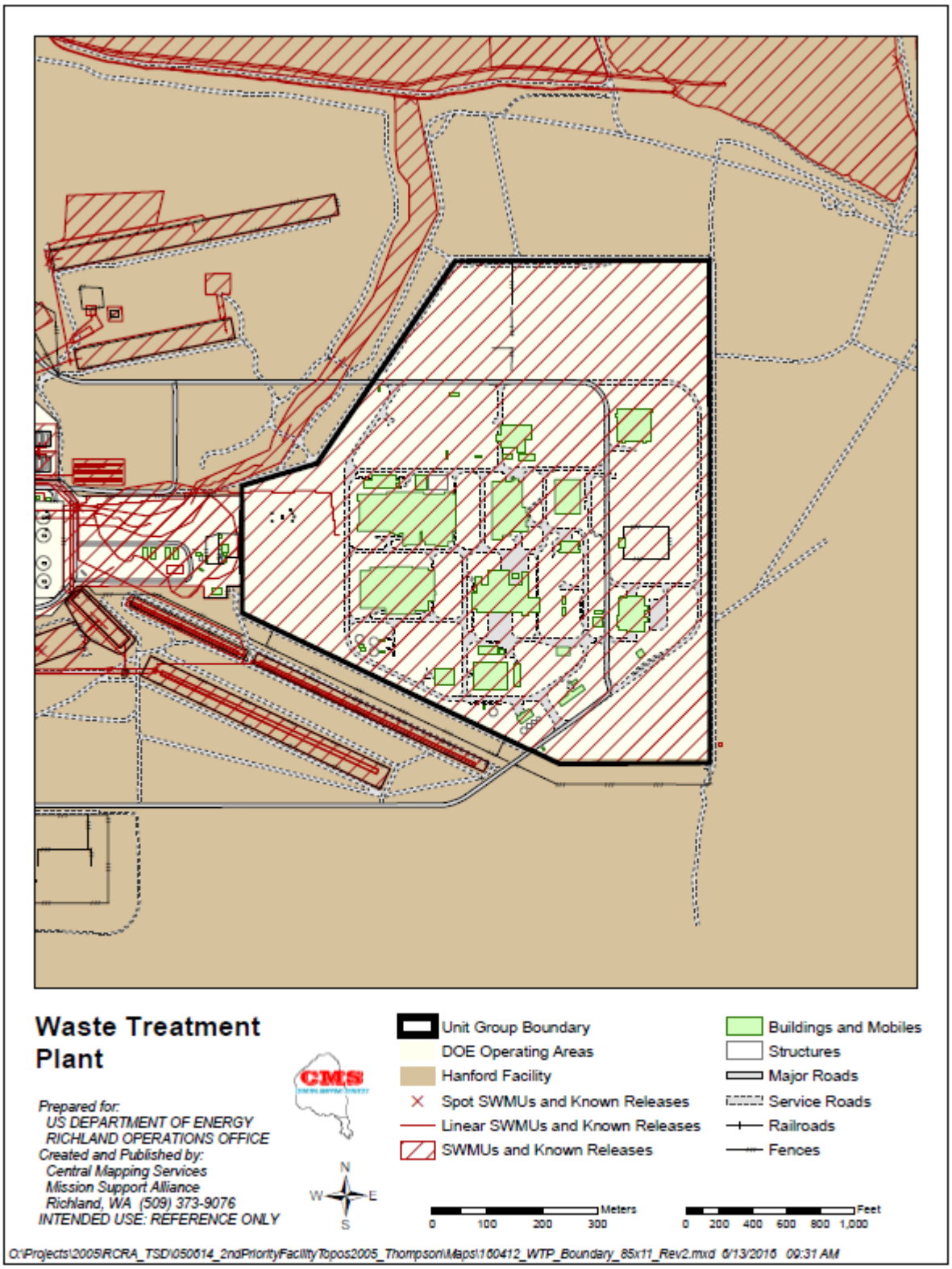

XVII. Photographs

All existing facilities must include photographs (aerial or ground-level) that clearly delineate all existing structures; existing storage, treatment, recycling, and disposal areas; and sites of future storage, treatment, recycling, or disposal areas (refer to Instructions for more detail).

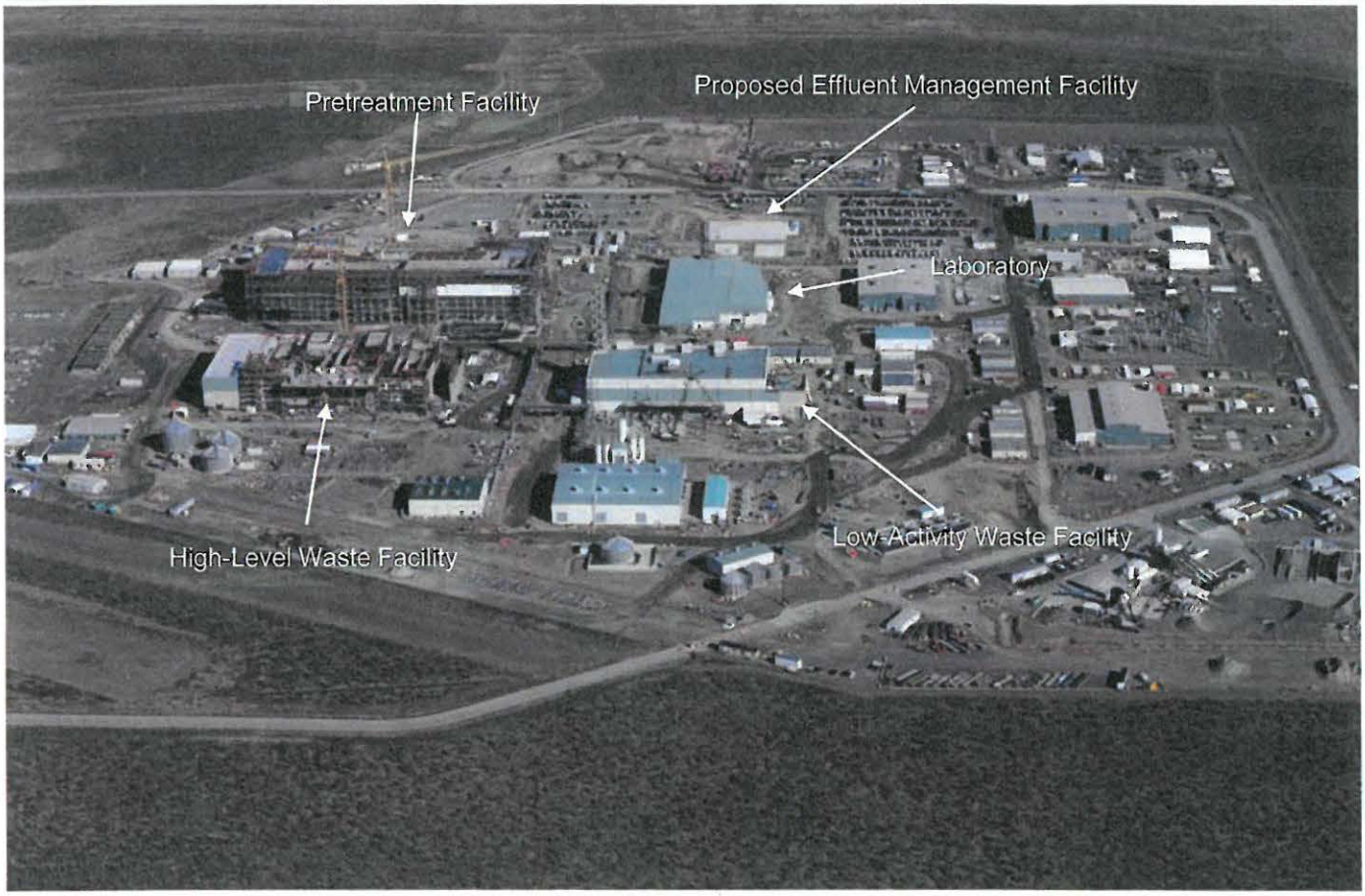

Photograph Date: 2016

XVIII. Certifications

I certify under penalty of law that this document and all attachments were prepared under my direction or supervision in accordance with a system designed to assure that qualified personnel properly gather and evaluate the information submitted. Based on my inquiry of the person or persons who manage the system, or those persons directly responsible for gathering the information, the information submitted is, to the best of my knowledge and belief, true, accurate, and complete. I am aware that there are significant penalties for submitting false information, including the possibility of fine and imprisonment for knowing violations.

Operator Name and Official Title (type or print)	**Signature**	**Date Signed**
Kevin W. Smith, Manager U.S. Department of Energy Office of River Protection	Kevin W. Smith	11/20/16

Co-Operator* Name and Official Title (type or print)	**Signature**	**Date Signed**
Peggy G. McCullough Project Director Bechtel National, Inc.	Margaret G. McCullough	11/16/16

Co-Operator* – Address and Telephone Number

2435 Stevens Center Place
Richland, WA 99352
(509) 371-2335

Facility-Property Owner Name and Official Title (type or print)	**Signature**	**Date Signed**
Kevin W. Smith, Manager U.S. Department of Energy Office of River Protection	Kevin W. Smith	11/28/16

Comments

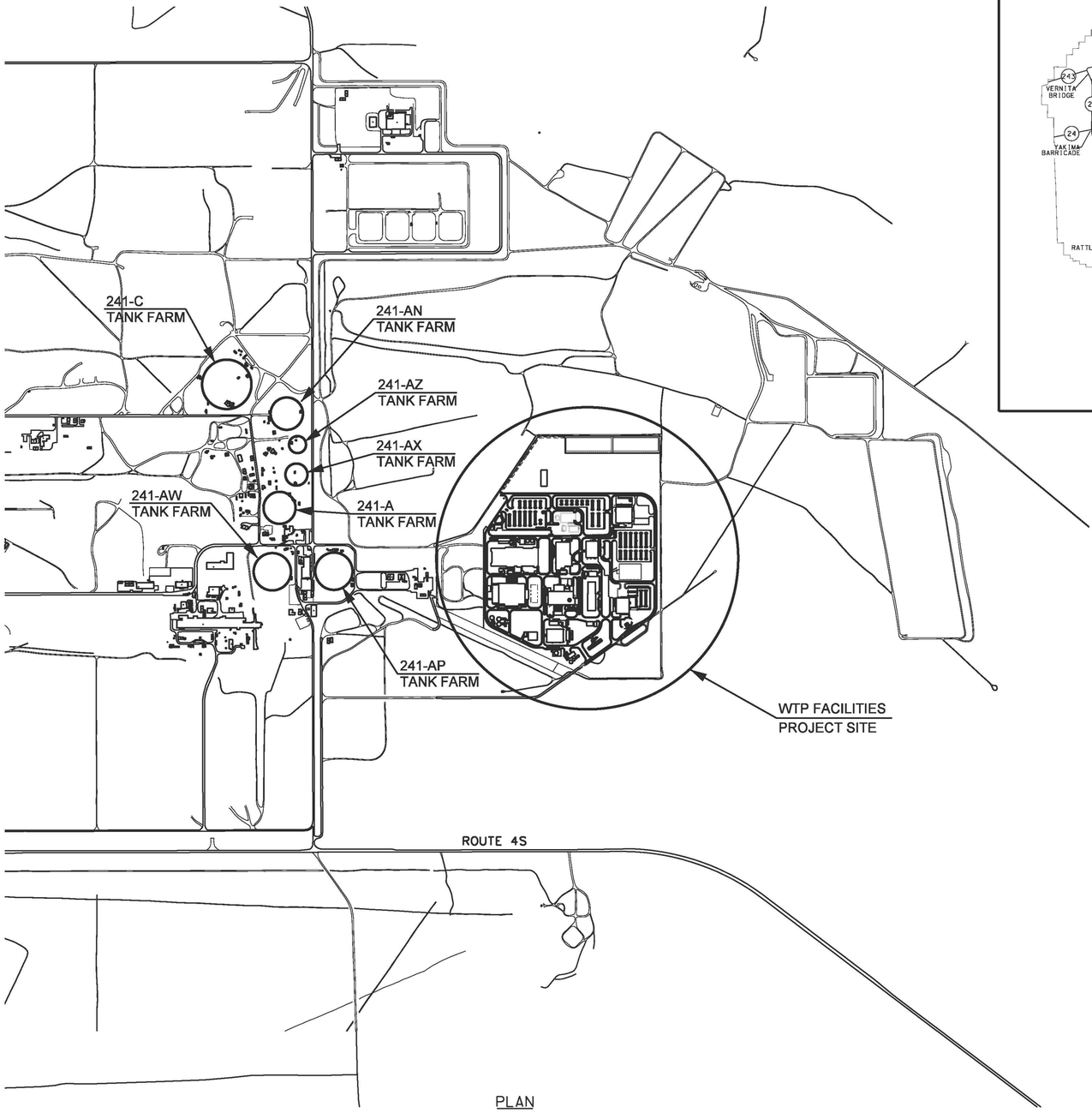

PLAN

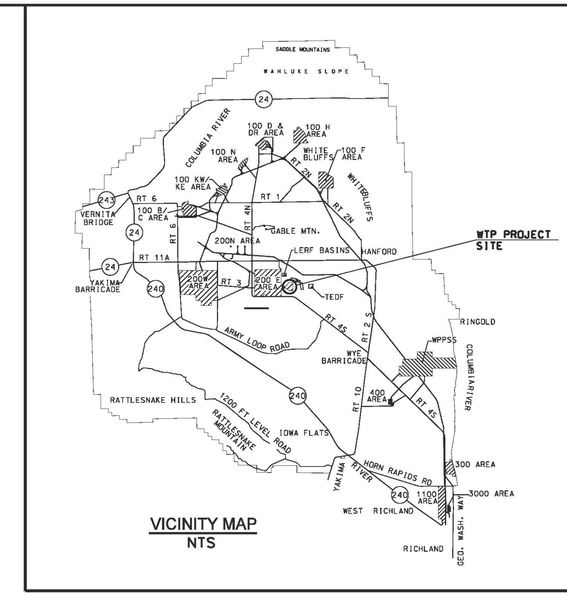

VICINITY MAP
NTS

WA 7890008967, CHAPTER 2.0
HANFORD TANK WASTE TREATMENT
AND IMMOBILIZATION PLANT
010/2016

RIVER PROTECTION PROJECT
WASTE TREATMENT PLANT
2435 STEVENS CENTER PLACE
RICHLAND, WA 99354

CONTRACT No: DE-AC27-01RV14136

DWP WTP
SITE VICINITY

SCALE: | FIGURE 2A-1 | REV

"E" SIZE - 44x34
COMPUTER GENERATED - MANUAL DESIGN CHANGES NOT PERMITTED

FORM E_SDN.DGN 02/2009

11/2/2016 2:51:31 PM

PLOTTED BY: fgritch

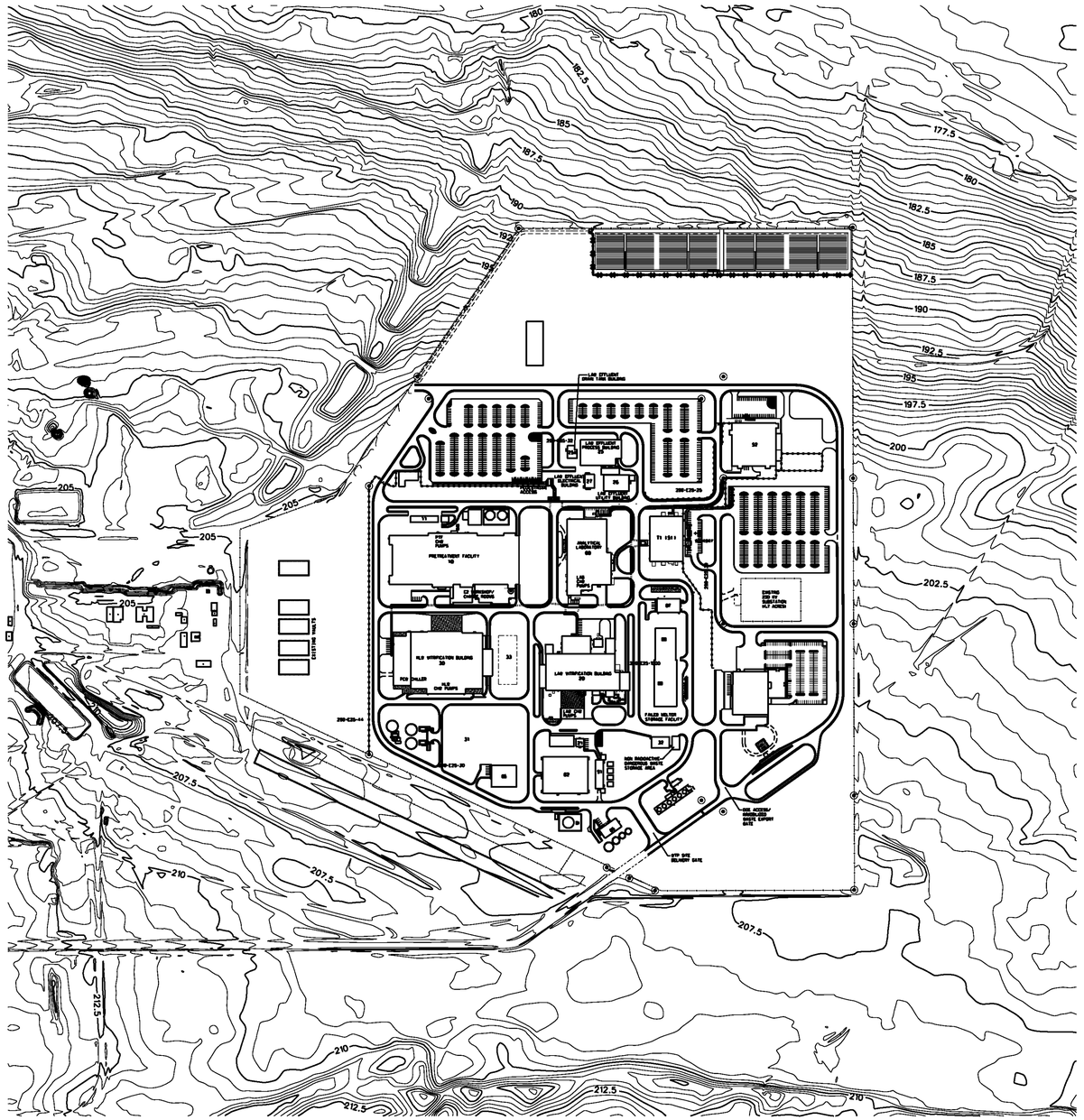

PLAN

200 100 0 200 400 FT

GRAPHIC SCALE

WIND ROSE FOR: 200E AREA PERIOD COVERED
STATION NO. 6 1/1/93 - 12/31/93

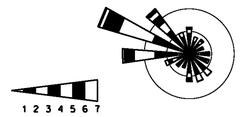

PADDLES INDICATE DIRECTION WIND IS COMING FROM.
RADIAL GRIDS REPRESENT 5.0% AND 10% OCCURRENCE.

WIND CLASS	MILES/HOUR
1	> 1 - 3
2	4 - 7
3	8 - 12
4	13 - 18
5	19 - 24
6	25 - 31
7	32 +

WIND CLASS

LEGEND:

- SECURITY FENCE
- EXISTING FENCE
- PEDESTRIAN TURNSYLE
- SWING GATE
- WTP PROJECT SITE BOUNDARY
- 190 MAJOR CONTOURS (IN METERS ABOVE MEAN SEA LEVEL)
- MINOR CONTOURS (IN METERS ABOVE MEAN SEA LEVEL)
- PROPERTY LINE

WA 7890008967, CHAPTER 2.0
HANFORD TANK WASTE TREATMENT
AND IMMOBILIZATION PLANT
10/2016

RIVER PROTECTION PROJECT
WASTE TREATMENT PLANT
2435 STEVENS CENTER PLACE
RICHLAND, WA 99354

CONTRACT No: DE-AC27-01RV14136

WTP
SITE TOPOGRAPHY MAP

SCALE: FIGURE 2A-2 REV

'E' SIZE - 44x34
COMPUTER GENERATED - MANUAL DESIGN CHANGES NOT PERMITTED

11/2/2016 2:58:12 PM

PLOTTED BY: tgrisch G:\24-DA\wtpda\d2100002sh 2.dgn

FORM E_SDN.DGN 02/2009

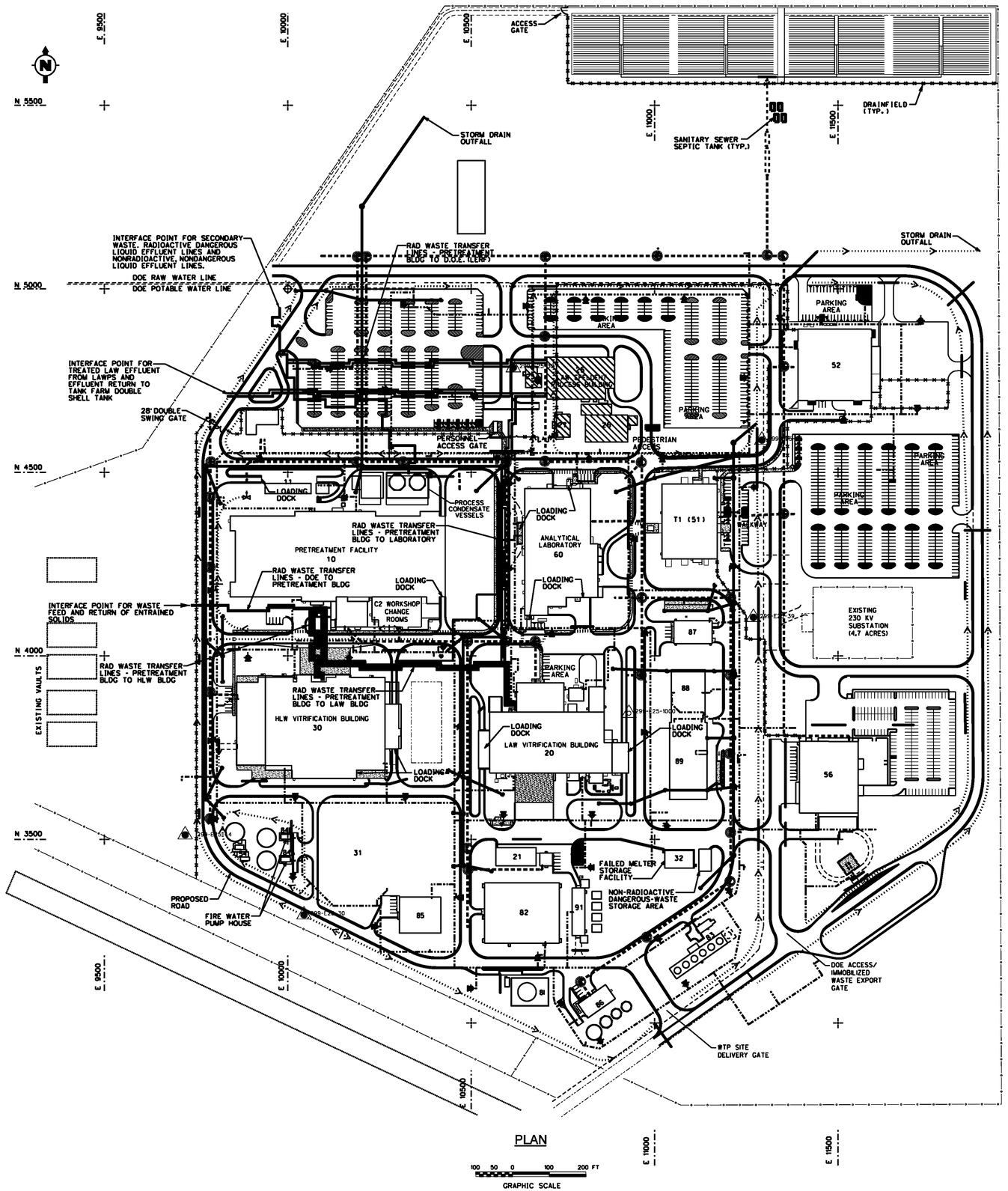

PLAN

GRAPHIC SCALE 100 50 0 100 200 FT

DANGEROUS WASTE MANAGEMENT UNITS	
BUILDING NO.	BUILDING
10	PRETREATMENT FACILITY
20	LAW VITRIFICATION BUILDING
30	HLW VITRIFICATION BUILDING
32	FAILED MELTER STORAGE FACILITY
60	ANALYTICAL LABORATORY
	PROCESS CONDENSATE VESSELS
25	LAW EFFLUENT PROCESS BUILDING
25A	LAW EFFLUENT DRAIN TANK BUILDING

LOADING/UNLOADING DOCKS	
BUILDING NO.	BUILDING
10	PRETREATMENT FACILITY
11	WET CHEMICAL STORAGE FACILITY
20	LAW VITRIFICATION BUILDING
21	GLASS FORMER STORAGE FACILITY
30	HLW VITRIFICATION BUILDING
32	FAILED MELTER STORAGE FACILITY
60	ANALYTICAL LABORATORY

OTHER BUILDING DESCRIPTIONS	
BUILDING NO.	BUILDING
22	SPENT MELTER STAGING
31	MELTER ASSEMBLY PAD
T1150	ADMINISTRATION BUILDING
52	WAREHOUSE
54	NON-DANGEROUS, NON-RADIOACIVE EFFLUENT FACILITY
56	COMBINATION SHOP (FUT. MAINT. SHOP AND OFFICE SPACE)
81	FUEL OIL FACILITY
82	CHILLER COMPRESSOR PLANT
83	COOLING TOWER FACILITY
84A & 84B	FIRE WATER PUMP HOUSE FACILITY
85	STEAM PLANT FACILITY
86	WATER TREATMENT BUILDING
87	SWITCHGEAR BUILDING
88	ITS SWITCHGEAR BUILDING
89	DIESEL GENERATORS FACILITY
91	BOF SWITCHGEAR BUILDING
26	LAW EFFLUENT UTILITY BUILDING
27	LAW EFFLUENT ELECTRICAL BUILDING

LEGEND:

- DOE SUPPLIED WATER LINES
- FIRE WATER LINE
- SANITARY SEWER LINE
- STORM DRAIN
- DFLAW EFFLUENT LINES
- ROADWAY DITCH
- EXISTING TRANSFER LINE
- EXISTING FENCE
- SECURITY FENCE
- EMF OPERATIONAL UNITS
- EXISTING ROAD
- FUTURE FACILITY

SYMBOLS:

- FIRE HYDRANT
- SANITARY SEWER MANHOLE
- SEPTIC TANK
- STORM DRAIN CATCH BASIN / MANHOLE
- 2003 DOE GROUNDWATER MONITORING WELL
- 2003 DECOMMISSIONED DOE GROUNDWATER MONITORING WELL
- PEDESTRIAN TURNSYLE
- SWING GATE
- SLIDING GATE
- ACCESS GATE
- SITE COORDINATE GRID POINT

WA 7890008967, CHAPTER 2.0
HANFORD TANK WASTE TREATMENT
AND IMMOBILIZATION PLANT
10/2016

RIVER PROTECTION PROJECT
WASTE TREATMENT PLANT
2435 STEVENS CENTER PLACE
RICHLAND, WA 99354

CONTRACT No: DE-AC27-01RV14136

DWP WTP
SITE MAP

SCALE: | FIGURE 2A-3 | REV

"E" SIZE - 44x34
COMPUTER GENERATED - MANUAL DESIGN CHANGES NOT PERMITTED

FORM E_SDNLDGN 02/2009

11/7/2016 1:01:22 PM

PLOTTED BY: tyrichm G:\2A-SA\topics\2A10000231.3.dgn

Appendix 3A

Waste Treatment and Immobilization Plant Waste Analysis Plan

This page intentionally left blank.

APPENDIX 3A
WASTE TREATMENT AND IMMOBILIZATION PLANT WASTE ANALYSIS PLAN

Contents

APPENDIX 3A WASTE TREATMENT AND IMMOBILIZATION PLANT WASTE ANALYSIS PLAN 1

3A.1.0 Introduction 1

3A.1.1 Overview 1

3A.1.2 Background 2

3A.2.1 Pretreatment 4

3A.2.2 Vitrification Systems 6

3A.2.3 Effluent Management Facility 7

3A.2.4 Offgas Treatment Systems 8

3A.3.0 Waste Acceptance 11

3A.3.1 Waste Feed Acceptance Process 12

3A.3.2 Waste Acceptance Criteria 16

3A.3.3 Analytical Services 21

3A.3.4 Waste Feed Designation 22

3A.4.0 Waste Feed Characterization 25

3A.4.1 Sampling Methods and Sampling Frequency 25

3A.4.2 Sample Preservation, Storage, and Holding Times 25

3A.4.3 Selection of Analytes 26

3A.4.4 Selection of Analytical Methods 26

3A.4.5 Quality Assurance and Quality Control 26

3A.5.1 Secondary Solid Waste Streams 29

3A.5.2 Liquid Waste Streams 33

3A.5.3 Treatment, Storage, or Disposal Unit Waste Acceptance Criteria 34

3A.6.0 Land Disposal Restrictions Evaluation for Immobilized Waste 34

3A.7.0 Waste Transfer Documentation System 35

3A.7.1 Solid Waste Transfer 36

3A.7.2 Liquid Waste Transfer 36

3A.7.3 Land Disposal Restrictions Notification and Certification 36

3A.8.0 Tracking System 36

3A.8.1 Inventory and Batch Tracking 37

3A.8.2 Sample Tracking 37

3A.8.3 Secondary Waste Stream Tracking 38

3A.9.0 Record Keeping 38
3A.10.0 References 39
3A.10.1 Project Documents 39
3A.10.2 Codes and Standards 39
3A.10.3 Other Documents 43

Tables

Table 3A-1 Summary of the Waste Feed Acceptance Process 47
Table 3A-2 Waste Feed Analysis, Waste Acceptance Criteria, and Nonconformance Actions 48
Table 3A-3 Summary of Dangerous Waste Numbers for WTP 50
Table 3A-4 Properties for the Determination of Ignitable Waste 52
Table 3A-5 Properties for the Determination of Reactive Waste 53
Table 3A-6 Secondary Solid Mixed Waste Streams 54
Table 3A-7 Variable Solid Waste Streams 55
Table 3A-8 Liquid Mixed Waste Streams 56

This page intentionally left blank.

Acronyms

ALARA	as low as reasonably achievable
~~ASTM~~	~~American Society for Testing and Materials~~
CRV	concentrate receipt vessel
~~BNI~~	~~Bechtel National, Inc.~~
~~CFR~~	~~Code of Federal Regulations~~
DOE	~~United States~~US Department of Energy
~~DOE-RL~~	~~United States Department of Energy, Richland Operations Office~~
DST	double-shell tank
~~DWPA~~DWP	WTP Dangerous Waste Permit ~~Application for the River Protection Project – Waste Treatment and Immobilization Plant~~
~~RDQO Optimization~~	~~Regulatory Data Quality Objectives Optimization Report~~
Ecology	Washington State Department of Ecology
EMF	Effluent Management Facility
EPA	~~United States~~US Environmental Protection Agency
ETF	Effluent Treatment Facility
FRP	waste feed receipt process system
HEME	high-efficiency mist eliminator
HEPA	high-efficiency particulate air (filter)
HLVIT	high-level vitrification
HLW	high-level waste
~~HSSWAC~~	~~Hanford Site Solid Waste Acceptance Criteria~~
~~HSLWAC~~	~~Hanford Site Liquid Waste Acceptance Criteria~~
ICN	~~integrated control network~~Integrated Control Network
ID	identification
IHLW	immobilized high-level waste
ILAW	immobilized low-activity waste
Lab	Analytical Laboratory

LAW	low-activity waste
LDR	Land Disposal Restrictions
LERF	Liquid Effluent Retention Facility
LIMS	laboratory information management system
~~LSM~~	~~locally-shielded melter~~
~~MSDS~~	~~material safety data sheet~~
NRC	US Nuclear Regulatory Commission
PCB	~~Polychlorinated Biphenyl~~polychlorinated biphenyl
~~PIN~~PDWRS	plant ~~information network~~data warehouse and reporting system
PIN	Plant Information Network
PPE	personal protective equipment
PT	Pretreatment (Facility)
QA	quality assurance
~~QAPjP~~ QAPP	Quality Assurance Project Plan for the Waste Analysis Plan
QC	quality control
RCRA	Resource Conservation and Recovery Act of 1976
RDQO	regulatory data quality objectives
SBS	submerged bed scrubber
SDS	safety data sheet
SWTD	Solid Waste Tracking Database
TOC	total organic carbon
TRU	transuranic ~~elements~~
TSD	treatment, storage, or disposal ~~(facility)~~
WAC	Washington Administrative Code
WAP	~~waste analysis plan~~Waste Treatment Plant Waste Analysis Plan
~~WTIS~~WESP	~~waste tracking and inventory system~~wet electrostatic precipitator
WIPP	Waste Isolation Pilot Plant
WTP	~~River Protection Project –~~ Hanford Tank Waste Treatment and Immobilization Plant

Glossary

This waste analysis plan ~~(WAP)~~ relies on the definitions of terms as contained in Appendix 2B of the *Hanford Facility Dangerous Waste Permit* ~~(Ecology 2009~~*Application, General Information Portion* (DOE-RL 2013) and other portions of the *WTP Dangerous Waste Permit* ~~Application for~~ (WA7890008967, herein referred to as the ~~River Protection Project – Waste Treatment and Immobilization Plant (DWPA) (Chapter 1.0),~~DWP) except as supplemented or amended below.

Batch	A portion (finite volume) of a waste campaign with similar physical and chemical properties where the required waste processing parameters do not vary.
Campaign	Volume of waste feed staged by the Tank Operations Contractor, consisting of multiple batches, that is to be treated using a similar processing strategy.
~~Batch~~Dangerous Waste	~~Retrievable waste staged in a single double-shell tank (DST) designated as mixed waste for transfer to the Waste Treatment Plant (WTP) for treatment.~~Solid wastes designated in WAC 173-303-070 through 173-303-100 as dangerous, extremely hazardous, or mixed radioactive and dangerous waste. Where information regarding treatment, management, and disposal of the radioactive component of mixed waste has been incorporated it is not incorporated for the purpose of regulating the radiation hazards of such components under this permit (see Condition III.10.A.)
Feed ~~verification~~acceptance	~~The activities the WTP will perform to verify that the staged waste feed meets the WTP acceptance criteria.~~Feed acceptance criteria are the technical and administrative requirements that a waste must meet in order for it to be accepted at a storage, treatment, or disposal facility (DOE M 435.1-1, *Nuclear Waste Policy Act* [DOE 2004], adapted from DOE 5820.2A, *Radioactive Waste Management*).
Feed confirmation	The activities the WTP will perform after receiving the waste feed, to confirm that the waste feed received is the same as the waste feed accepted for delivery.
High-Level Waste	High-level waste or HLW means: (1) irradiated reactor fuel; (2) liquid wastes resulting from the operation of the first cycle solvent extraction system, or equivalent, and the concentrated wastes from subsequent extraction cycles, or equivalent, in a facility for reprocessing irradiated reactor fuel; or (3) solids into which such liquid wastes have been converted (10 CFR 60.2, *Disposal of High-Level Radioactive Wastes in Geologic Repositories – Definitions*). High-level waste is the highly radioactive waste material resulting from the reprocessing of spent nuclear fuel, including liquid waste produced directly in reprocessing and any solid material derived from such liquid waste that contains fission products in sufficient concentrations; and other highly radioactive material that is determined, consistent with existing law, to require permanent isolation (DOE 2004).

Immobilization	The act or process of reducing the mobility of waste constituents to limit their potential for long-term transport in the biosphere and subsequent exposure to humans, animals, and plants. Vitrification is an example of an immobilization process.
Immobilized Waste	Liquid waste feed that has had its constituents solidified by processing, such as in a vitrification plant.
Incidental Waste	Waste resulting from reprocessing spent nuclear fuel that is determined to be incidental to reprocessing is not high-level waste, and shall be managed under DOE's regulatory authority in accordance with the requirements for transuranic waste or low-activity waste, as appropriate (DOE 2004).
Low-Activity Waste	Low-activity waste is radioactive waste that is not high-level radioactive waste, spent nuclear fuel, transuranic waste, byproduct material (as defined in Section 11e.(2) of 42 USC 2011 et seq., *Atomic Energy Act of 1954*, or naturally occurring radioactive material (DOE 2004).
Mixed Waste	A dangerous, extremely hazardous, or acutely hazardous waste that contains both a nonradioactive hazardous component and, as defined by 10 CFR 20.1003, source, special nuclear, or byproduct material subject to the *Atomic Energy Act of 1954* (42 USC 2011 et seq.). Waste that contains both source, special nuclear, or byproduct material subject to the *Atomic Energy Act of 1954* (42 USC 2011 et seq.), and a hazardous component subject to the *Resource Conservation and Recovery Act* (DOE 2004).
Radioactive Waste	10 CFR 60.2 defines radioactive waste as high-level waste and other radioactive materials other than high-level waste that are received for emplacement in a geologic repository. Within the context of this document, radioactive waste also includes secondary waste streams, any garbage, refuse, sludges, and other discarded material, including solid, liquid, semisolid, or contained gaseous material that must be managed for its radioactive content. [DOE 2004]

1

This page intentionally left blank.

APPENDIX 3A WASTE TREATMENT AND IMMOBILIZATION PLANT WASTE ANALYSIS PLAN

3A.1.0 INTRODUCTION

This Waste Analysis Plan (herein referred to as "this WAP") describes the sampling and analysis for dangerous waste constituents for the ~~River Protection Project –~~ Hanford Tank Waste Treatment and Immobilization Plant~~-~~ (WTP) to comply with the Washington State Dangerous Waste Regulations contained in ~~Chapter 173-303 of the *Washington Administrative Code* (WAC).~~WAC 173-303, *Dangerous Waste Regulations*. It was prepared in accordance with the requirements of WAC 173-303-110, *Dangerous Waste Regulations* – *Sampling and Testing Methods*~~," WAC 173-303-300, ";~~ WAC 173-303-300, *Dangerous Waste Regulations* – *General Waste Analysis*~~," WAC 173-303-806, ";~~ WAC 173-303-806, *Dangerous Waste Regulations* – *Final Facility Permits*~~,";~~ and permit WA7890008967, *Dangerous Waste Portion of the Hanford Facility* ~~*Dangerous Waste*~~ *Wide Resource Conservation and Recovery Act Permit for the Treatment, Storage, and Disposal of Dangerous Waste* (Hanford Facility RCRA Permit – Dangerous Waste Portion) (Ecology~~-1994).~~ 2007) (herein referred to as the DWP). Some ~~non-dangerous~~nondangerous constituents are also discussed in this ~~plan~~WAP, if they support compliance activities or if the discussion provides a more complete description of a particular sampling strategy. ~~The~~ In this WAP, the descriptions ~~in this plan~~ of the waste feed stored at the Hanford Site double-shell ~~and~~tank (DST) (which includes waste transferred from the single-shell tank system ~~units (collectively referred to as Hanford tank waste~~unit) and the planned process streams are based on available chemical and physical information and process knowledge.

3A.1.1 Overview

This WAP describes the general requirements for the collection and analysis of waste to be processed by the WTP, and the requirements for characterization of secondary wastes where process knowledge is inadequate to support designation.

The Tank Operations Contractor will characterize the staged DST waste feed in conformance with 24590-WTP-RPT-MGT-04-001, *Regulatory Data Quality Objectives Optimization Report*[1] (herein referred to as "RDQO Optimization Report"). Based on the results, the Tank Operations Contractor will develop a waste profile specific to the staged waste and the planned treatment campaign.

Prior to transferring waste, the WTP will evaluate the waste profile and characterization data for conformance with WTP waste acceptance criteria. The WTP will use this information to ensure the waste feed planned for receipt meets waste acceptance criteria. Analytical results will also be used to determine the appropriate treatment requirements for each campaign. The volume of the waste transferred from the Tank Operations Contractor will also be compared with the volume received at WTP to confirm the waste transfer was completed as planned.

[1] The RDQO Optimization Report, Section 9.6, Quality Assurance, specifies compliance with NQA-1-1989; however, 24590-WTP-QAM-QA-06-001, *Quality Assurance Manual*, updates this requirement and requires compliance with NQA-1-2000, *Quality Assurance Requirements for Nuclear Facility Applications*.

Simplified process flow figures for WTP processes are included in Appendix 4A of the DWP. The waste will be separated into low and high activity fractions, treated, combined with glass-forming chemicals, and melted into a solid glass form in a process known as vitrification.

The vitrified waste will be subject to land disposal restrictions. A site-specific variance under 40 CFR 268.44, *Land Disposal Restrictions – Variance from a Treatment Standard*, that would specify high-level waste vitrification (HLVIT) as the method of treatment for Hanford tank waste processed through the WTP will be submitted (refer to Section 3A.6.0). The petition would provide the basis to establish the HLVIT treatment standard in lieu of existing concentration-based treatment standards, and would negate the need for sampling the vitrified waste forms. Therefore, sampling and characterization of vitrified waste is not within the scope of this WAP.

Operation of WTP will generate secondary wastes, in solid and liquid form. These wastes will be designated according to available process knowledge, or will be sampled and analyzed as necessary to fully address treatment, storage, or disposal (TSD) unit waste acceptance criteria. Secondary wastes that are not treated by the WTP will be transported by the Tank Operations Contractor to an appropriate TSD unit, subject to that TSD unit's waste acceptance criteria.

Controlled copies of this WAP will be kept by the WTP Project. The Project Document Control manager, or equivalent title, will be responsible for ensuring that controlled copies of this WAP are kept current when revisions are made to this WAP.

3A.1.2 Background

Reactor fuel reprocessing is the primary source of waste material stored in the Hanford double-shell and single-shell tanks. Minor amounts of other radioactive and mixed waste (~~such as~~ e.g., low-~~level~~activity and transuranic [TRU] waste) are also included in the ~~double-shell tanks~~DSTs; however, the tank waste is managed as high-level waste (HLW) prior to treatment and vitrification. The waste feed to the WTP will consist of staged transfers of mixed waste from the ~~double-shell tank (~~DST~~)~~ system unit, the TSD unit operated by the Tank Operations Contractor. This waste is composed of sludge, salt cake, and liquids, and is considered mixed waste as defined by WAC 173-303; that is, it contains both radioactive and dangerous waste.

~~HLW is defined by~~In 10 CFR 72.3, *Licensing Requirements for the* ~~United States~~*Independent Storage of Spent Nuclear Fuel, High-Level Radioactive Waste, and Reactor-Related Greater than Class C Waste – Definitions*, the US Nuclear Regulatory Commission (NRC) ~~in the *Code of Federal Regulations*, 10 CFR 72.3,~~defines "high-level radioactive waste" as follows:

> ~~"(~~(1) the highly radioactive material resulting from the reprocessing of spent nuclear fuel, including liquid waste produced directly in reprocessing and any solid material derived from such liquid waste that contains fission products in sufficient concentrations; and (2) other highly radioactive material that the Commission, consistent with existing law, determines by rule requires permanent isolation~~." ".~~

Hanford tank waste is consistent with the HLW definition. The treatment of the Hanford tank waste is required under the Hanford Federal Facility Agreement and Consent Order (Tri-Party Agreement) (Ecology, EPA, and DOE ~~1996~~2011), signed by the Washington State Department of

Ecology (Ecology), the ~~United States~~ US Environmental Protection Agency (EPA), and the ~~United States~~ US Department of Energy~~-~~ (DOE).

In a letter to the DOE Richland ~~DOE~~ Operations Office~~ (DOE-RL) (Paperiello,~~ titled Classification of Hanford Low-Activity Tank Waste Fraction (NRC 1997~~),~~)—the NRC documented an agreement with DOE to classify a portion of the Hanford tank waste as "incidental waste" in accordance with the incidental waste classification criteria specified in an earlier letter from the NRC to DOE (~~Bernero,~~NRC 1993). The lower activity portion of the tank waste, referred to as low-activity waste (LAW) feed, generally refers to the supernatant portion of the tank waste. Following ~~radionuclide removal and vitrification,~~ pretreatment of the tank waste, waste feed received at the LAW Facility will be classified as low-activity waste and supported by a waste incidental to reprocessing determination. The waste will be vitrified in the LAW Facility. The corresponding immobilized low-activity waste~~-~~ (ILAW) will be ~~considered incidental waste, disposed of onsite at Hanford as low-level waste, and will not be subject to the licensing authority of the NRC, consistent with the NRC incidental waste determination. The ILAW will be~~ managed as mixed waste for disposal onsite.

The higher activity and higher solids portion of the Hanford tank waste is designated as HLW feed~~ in the Dangerous Waste Permit Application for the River Protection Project—Waste Treatment and Immobilization Plant (DWPA).~~. The two different terms describing the~~ Hanford~~ tank waste are used because the LAW and HLW fractions of the waste feed are processed differently in the WTP, as described in Section 3A.2.0 of this WAP.

~~The DST system unit will provide a waste profile and, upon request, a split sample aliquot for each waste feed that is staged for transfer to the WTP. The WTP will perform verification analysis on the aliquot to determine if the waste feed meets WTP acceptance criteria. The WTP will also compare the volume of waste feed transferred from the DST feed staging tank with the volume received into the feed receipt tanks at the WTP, to confirm that the waste feed received corresponds to the waste feed accepted for transfer.~~

~~The WTP will characterize the DST waste feed in conformance with the *Regulatory Data Quality Objectives Optimization Report* (RDQO Optimization) process (24590-WTP-RPT-MGT-04-001). Characterization of the DST waste feed will be completed prior to transfer to the WTP. Simplified process flow figures of the operations at the WTP are included in Appendix 4A.~~

~~Controlled copies of this WAP will be kept at the WTP facility. The Project Document Control Manager, or equivalent title, will be responsible for ensuring that controlled copies of the WAP are kept current when revisions to the WAP are made.~~

~~2~~3A2.0 Waste Treatment and Immobilization Plant Unit Description

The WTP is a waste treatment unit described under the unit-specific portion of the Hanford Facility RCRA Permit – Dangerous Waste ~~*Permit*~~Portion (Ecology~~ 1994).~~ 2007). Section XV of the Part A Form presents a plan view of the WTP~~ is located in Chapter 1.0~~. This section briefly describes the WTP processes and activities. More detailed process information is provided in Chapter~~ 4.0.~~ 4 of the DWP.

~~Figure B1-1~~The WTP has been designed to operate under two operating scenarios. In the baseline configuration, DST waste will first be processed through the WTP Pretreatment (PT) Facility, and then sent on for vitrification at the LAW Facility. Alternately, under a direct feed operating scenario, waste

may be sent directly from the Tank Operating Contractor to the LAW facility if the waste meets LAW waste acceptance criteria.

The WTP will commence initial operations by processing waste pretreated by the Tank Operations Contractor under a direct feed option. In this configuration, the LAW Facility and WTP Analytical Laboratory (Lab) will be commissioned to operate while the PT Facility and HLW Facility construction is completed. Direct feed low-activity waste (DFLAW) operations will support processing of Hanford tank waste into glass at the earliest possible date while efforts to complete PT Facility continue. Upon the completion of construction and successful commissioning of the PT and HLW facilities, the WTP will switch to the baseline configuration. The portion of DST waste not subject to direct feed processing (e.g., not pretreated or conditioned before transfer to WTP) will be treated in the baseline configuration with PT, LAW, and HLW facilities. These configurations are independent of one another and will not occur in parallel. Both operating configurations are discussed in this WAP.

Figure 4A-1 of Appendix 4A is a simplified diagram of the treatment ~~components, showing~~process. It shows the relationship between the following:

- ~~—~~
- Waste feed~~.~~
- Pretreatment~~.~~
- LAW vitrification.
- HLW vitrification

Plant equipment will include the following:

- Pipelines, tanks, and ancillary equipment~~.~~
- Evaporation units~~.~~
- Ultrafiltration units~~.~~
- Ion~~-~~ exchange columns~~.~~
- Chemical addition equipment~~.~~
- LAW and HLW melters~~.~~
- Service and utility units~~.~~
- Container management units~~.~~
- Storage facilities~~.~~
- ~~Off-gas~~Offgas treatment systems~~.~~

The pretreatment and vitrification of the waste feed and the management of ~~off-gas~~offgas from these processes are described in the following sections. The applicability of air emissions standards to the WTP is also discussed.

3A.2.1 Pretreatment

As-received waste that already meets the vitrification facility's waste acceptance criteria may be sent directly from the DST unit to the LAW Facility, bypassing the PT Facility. Other waste will require pretreatment before it can be vitrified.

Pretreatment will prepare the DST waste feed for vitrification~~.~~ when the WTP is in the baseline configuration. An overview of the pretreatment processes is provided below and illustrated in ~~Figure B1-1.~~ Figure 4A-2 of Appendix 4A. Descriptions of the feed receipt tanks and pretreatment equipment are provided in Chapter ~~4.0~~ of the DWP.

Pretreatment of the waste feed will consist of the following processes:

- Concentration of the waste feed by evaporation~~.~~
- Separation of entrained solids by ultrafiltration~~.~~
- Separation of strontium and ~~transuranic~~TRU elements ~~(TRU)~~ by precipitation and ultrafiltration~~.~~
- Separation of cesium in ~~an~~ ion exchange ~~unit.~~units
- Final concentration by evaporation for the LAW feed~~.~~

The following paragraphs provide a description of these processes.

Waste requiring pretreatment will undergo a series of processes to separate the LAW and HLW waste fractions and prepare them for vitrification. After the receipt of the waste feed from the DST system unit, the waste feed evaporator, a forced-circulation vacuum evaporator, will concentrate the waste feed prior to ultrafiltration. Ultrafiltration will remove entrained solids from the concentrated waste feed. The solids will be washed and will either be transferred to the HLW feed or returned to the DST system unit. For certain waste feed, strontium and TRU will be precipitated by adding reagents to the waste feed. The precipitate containing strontium and TRU will be concentrated and washed in the ultrafiltration system before incorporation into the HLW feed.

~~Condensate from the evaporator off-gas streams will be collected and transferred to condensate tanks for discharge to the Liquid Effluent Retention Facility (LERF) or the Effluent Treatment Facility (ETF), or both, for subsequent treatment. Non-condensable gases that are extracted from the evaporator system will be routed to the pretreatment process tank ventilation off-gas treatment system. Refer to Section 2.3.1 for a description of the pretreatment off-gas treatment systems.~~

The liquid separated by ultrafiltration will become the LAW feed. The LAW feed will pass through the cesium ion exchange system to separate cesium from the LAW feed. ~~The cesium will be blended with the HLW feed.~~

The LAW feed leaving the ion exchange ~~unit~~units will be concentrated by evaporation in the LAW melter feed evaporator. The operation of the LAW melter feed evaporator will be similar to that of the waste feed evaporator. The pretreated LAW feed will be transferred to the LAW ~~vitrification plant~~ Facility for vitrification into the ILAW glass product.

The captured cesium will be eluted from the ion exchange resin and blended with the HLW feed. The HLW feed will then consist of washed solids, strontium and TRU precipitates for certain feed streams, and the cesium ion exchange ~~product~~products. The blended HLW feed will be transferred to the HLW ~~vitrification plant~~ Facility for vitrification into the immobilized high ~~-~~level waste (IHLW) glass product.

Condensate from the evaporator offgas streams will be collected and transferred to condensate tanks for discharge to the Liquid Effluent Retention Facility (LERF) or the Effluent Treatment Facility (ETF), or

both, for subsequent treatment. Noncondensable gases extracted from the evaporator system will be routed to the pretreatment process tank ventilation offgas treatment system. Refer to Section 3A.2.4.1 for a description of the pretreatment offgas treatment systems.

Details of the PT Facility are provided in Chapter 4 of the DWP.

3A.2.2 Vitrification Systems

After pretreatment, LAW feed will be transferred to the LAW ~~vitrification plant~~ Facility, and HLW feed will be transferred to the HLW ~~vitrification plant~~ Facility, for conversion to the immobilized glass product. The vitrification process is the same for the DFLAW configuration, absent the need for treatment at the PT and HLW facilities.

Details of the LAW and HLW facilities and systems are provided in Chapter 4 of the DWP.

3A.2.2.1 Low-Activity Waste Vitrification

The pretreated and concentrated LAW feed exiting the LAW melter feed evaporator or transferred directly from the DST system unit will be combined with necessary glass-forming additives (~~for example, Silica, Alumina, Boric Acid~~e.g., silica, alumina, boric acid, and ~~Calcium Silicate~~calcium silicate) and reductants. The slurry of waste feed and glass formers will be transferred to the LAW melter feed tanks in a manner to provide a continuous feed to each of the ~~two~~ LAW melters. The electric-powered, joule-heated LAW melters will operate in parallel. The temperature of the molten glass in the melters will be approximately 950 °C to 1250 °C.

In the melter, the feed components will be converted to their respective oxides and dissolved in the melt, destroyed by the high temperatures, or partitioned to the ~~off-gas~~offgas. As these materials are heated, superheated gases will be released into the melter ~~off-gas~~offgas system. Here, most of the solids entrained in the ~~off-gas~~offgas will be captured and returned to the waste feed stream for treatment. The LAW ~~off-gas~~offgas treatment system will treat the volatile constituents that remain in the ~~off-gas~~offgas. LAW ~~off-gas~~offgas treatment is discussed in Section 3A.2.~~3~~4.2.

Molten glass will be discharged from the melters to ~~stainless steel~~metal containers for cooling, solidification, and storage. The process will yield a durable glass containing the ILAW. The glass will be cooled, and the container will be sealed, decontaminated, and temporarily stored before being transferred to an appropriate Hanford Site ~~treatment, storage, or disposal (~~TSD~~)~~ unit.

In the DFLAW configuration, condensate from the submerged bed scrubber (SBS), the wet electrostatic precipitator (WESP) drainage, spent caustic scrubber solution, and system flush water will be collected via the LAW Vitrification Facility Radioactive Liquid Waste Disposal (RLD) System. Contents from the RLD-VSL-00005 in the LAW and RLD-VSL-00164 in the Lab will be transferred to the Effluent Management Facility (EMF). The EMF will evaporate, or in the case of the spent caustic scrubber solutions sample, these effluents prior to transfer back to LAW or to the LERF/ETF for subsequent treatment. Refer to Section 3A.2.4.3 for a description of the EMF offgas treatment system.

In the baseline configuration, SBS and WESP condensate will be recycled to PT Facility for concentration with treated LAW and eventual incorporation of residual solids in the ILAW. Refer to Section 3A.2.4.2 for a description of the LAW Facility offgas treatment systems.

3A.2.2.2 High-Level Waste Vitrification

The HLW ~~vitrification system~~ Facility will receive feed slurry from the HLW pretreatment process. The feed slurry will be combined with necessary glass-forming additives (~~Silica, Boric Acid, Calcium Silicate, Ferric Oxide~~silica, boric acid, calcium silicate, ferric oxide, and ~~Lithium Carbonate~~lithium carbonate) and reductants, and will then be fed to ~~each of~~ the ~~two~~ HLW ~~melters.~~melter(s). The temperature of the molten glass in the HLW melter will be approximately 950 °C to 1250 °C.

In the melter~~,~~(s), feed components will be converted to their respective oxides and dissolved in the melt, destroyed by the high temperatures, or partitioned to the ~~off-gas~~offgas. As these materials are heated, superheated gases, including volatile feed components, will be released into the melter ~~off-gas~~offgas system, where most of the solids entrained in the ~~off-gas~~offgas will be captured and returned to the waste feed stream for treatment. The HLW ~~off-gas~~offgas treatment system will treat the volatile constituents that remain in the ~~off-gas~~offgas. The HLW ~~off-gas~~offgas treatment system is discussed in Section 3A.2.~~3.3~~4.4.

Molten glass will be discharged from the HLW ~~melters~~melter(s) to ~~stainless steel canisters~~metal containers for cooling, solidification, and storage. The process will yield a durable glass containing IHLW. The glass will be cooled and the ~~canister~~container sealed, decontaminated, and temporarily stored before being transferred to the Hanford Canister Storage Building unit for storage until final disposal.

~~2.3 OFF-GAS TREATMENT SYSTEMS~~

~~The pretreatment plant, the LAW vitrification plant,~~The SBS and WESP condensate from the HLW ~~vitrification plant will each have a dedicated off-gas~~ Facility offgas control equipment will be recycled to the PT Facility for concentration with treated LAW and eventual incorporation of residual solids in the ILAW. Refer to Section3A.2.4.4 for a description of the HLW Facility offgas treatment ~~system.~~ systems.

3A.2.3 Effluent Management Facility

When the WTP is configured for direct waste feed to the LAW Facility, the EMF will support operations in collecting and processing the radioactive liquid effluents from the LAW Facility and Lab to support a LAW Facility design capacity of 30 metric tons of glass per day and a minimum treatment capacity of 21 metric tons of glass per day. An evaporator is used to concentrate liquid effluents from the LAW RLD System and Lab RLD System. The concentrated stream is recycled back to the LAW Facility or back to the DST System. Prior to return to the DST system, the stream may be adjusted to meet DST WAC. The EMF will have a nominal lifetime of approximately 40 years. It is designed to work in concert with the Lab and LAW Facility. The EMF contains an evaporator system, nine process vessels, and three supporting reagent storage tanks. All waste streams, including mixed waste (hazardous and radioactive), are identified, minimized, and have designated disposal routes. The facility design accommodates disposal routes, size reduction, encapsulation/packaging, accumulation, staging, surveying, and transfer and export of secondary waste streams.

The EMF dilute effluent transfer line will tie into the PT Facility effluent transfer line upstream of the LERF/ETF interface point. Evaporator condensate, along with LAW and Lab RLD liquids that meet the *Liquid Waste Processing Facilities Waste Acceptance Criteria* (herein referred to as "the LERF/ETF WAC") (CHPRC 2012) will be discharged to the LERF/ETF for subsequent treatment and disposal. The

evaporator concentrate (bottoms) will be collected, sampled, chemically adjusted, and batch transferred to the LAW Facility for incorporation into the LAW vitrification process. Excess concentrated effluent or effluent that does not meet the LAW Facility acceptance criteria for incorporation into the vitrification process may be returned to the DST unit. The return line from the EMF to the DST system unit conveys concentrated liquid effluents that meet the DST system unit waste acceptance criteria from the EMF back to the DST system unit for storage.

Details of the EMF are provided in Chapter 4 of the DWP.

3A.2.4 Offgas Treatment Systems

The ~~pretreatment plant, the LAW vitrification plant, and the HLW vitrification plant will each have a dedicated off-gas treatment system.~~ PT Facility, the LAW Facility, the EMF, and the HLW Facility will each have a dedicated offgas treatment system. These systems are described in the following sections. ~~The off-gas~~The PT, LAW, and HLW facilities' offgas treatment systems are illustrated in ~~Figure B1~~Figure 4A-1~~.~~ of Appendix 4A. Air emissions are addressed in Section 3A.2.~~3.~~4.5. Details regarding the ~~off-gas~~offgas treatment system components are discussed in Chapter~~.~~ 4~~.0~~ of the DWP.

3A.2.~~34~~.1 Pretreatment ~~Plant Off-gas~~ Facility Offgas

~~Figure B1~~Figure 4A-1 of Appendix 4A illustrates the ~~pretreatment plant off-gas~~PT Facility offgas treatment system. The pretreatment ~~off-gas~~offgas from ~~fluidic devices~~dangerous waste processing equipment will be treated through a high-efficiency mist eliminator~~.~~ (HEME) and high-efficiency particulate air~~.~~ (HEPA) filter, and routed to the ~~pretreatment plant~~PT Facility stack, where it will be monitored and released to the atmosphere.

The pretreatment ~~off-gas~~offgas from vessels will be treated through the following components operating in series:

- Acid gas scrubber~~.~~
- HEME~~.~~
- HEPA filter~~.~~
- Volatile organic compound oxidizer~~.~~
- Carbon adsorber~~.~~

The treated pretreatment ~~off-gas~~offgas from vessels will be monitored and released to the atmosphere through the ~~pretreatment plant~~PT Facility stack.

3A.2.~~34~~.2 Low-Activity Waste Vitrification ~~Off-gas~~Offgas

~~The LAW melter off-gas treatment system will consist of the following components operating in series, as illustrated in Figure B1-1:~~
The LAW melter offgas treatment system will consist of the following components operating in series, as illustrated in ~~Figure B1-1:~~ Figure 4A-1 of Appendix 4A:

- Film cooler~~.~~
- ~~Submerged bed scrubber.~~

- ~~Wet electrostatic precipitator.~~
- SBS
- WESP
- ~~HEME.~~
- HEPA filter~~.~~
- ~~Activated carbon adsorber.~~
- ~~Silver mordenite iodine adsorption unit.~~
- Thermal catalytic oxidation unit~~.~~
- ~~Selective catalytic reduction unit.~~
- Caustic scrubber

The treated ~~HLW off-gas~~LAW offgas will be monitored and released to the atmosphere through the ~~HLW~~LAW Facility stack.

- ~~Film cooler.~~
- ~~Submerged bed scrubber.~~
- ~~Wet electrostatic precipitator.~~
- ~~HEPA filter.~~
- ~~Activated carbon adsorber.~~
- ~~Thermal catalytic oxidation unit.~~
- ~~Selective catalytic reduction unit.~~
- ~~Caustic scrubber.~~

~~The treated LAW off-gas will be monitored and released through the LAW stack.~~

~~2.3.3 High-Level Waste Vitrification Off-gas~~

~~The HLW melter off-gas~~

3A.2.4.3 Effluent Management Facility Offgas

The EMF offgas treatment system will consist of HEPA filtration. The treated EMF offgas will be monitored and released to the atmosphere through the EMF stack.

3A.2.4.4 High Level Waste Vitrification Offgas

The HLW melter offgas treatment system will consist of the following components, as illustrated in Figure 4A-1 of Appendix 4A:

- Film cooler
- SBS
- WESP
- HEME

- HEPA filter
- Thermal catalytic oxidation unit
- Selective catalytic reduction unit
- Silver mordenite iodine adsorption unit~~.4~~

The treated HLW offgas will be monitored and released to the atmosphere through the HLW Facility stack.

3A.2.4.5 Air Emissions

Emissions from the stacks that vent the WTP processes will be monitored according to the provisions of the ~~WTP and~~ *Hanford* ~~Site~~ *Air Operating Permit*~~,~~ *00-05-006 Renewal 2 - Revision A* (Ecology 2014), as required by ~~WAC 173-303-395(2).~~WAC 173-303-395(2), *Dangerous Waste Regulations – Other General Requirements*. Monitoring and sampling to address air emissions concerns under these permits will not be addressed in this application. However, the applicability of the air emissions requirements found in WAC 173-303 will be evaluated in the following sections. Details of the air emissions control systems for the WTP are provided in Chapter 4~~.0~~ of the DWP.

3A.2.~~3.~~4.5.1 Air ~~Emissions from~~Emission Standards for Process Vents (Subpart AA)

~~WAC 173-303-690,~~WAC 173-303-690, *Dangerous Waste Regulations – Air Emission Standards for Process Vents*, commonly referred to as "Subpart AA~~,~~," regulates process vents ~~that are~~ associated with distillation, fractionation, thin-film evaporation, solvent extraction, or air- or steam-stripping operations that manage hazardous wastes with organic concentrations of at least 10 parts per million ~~by weight. WAC 173-303-690 incorporates the provisions of 40 CFR 264.1031 through 40 CFR 264.1036~~ (ppm) by weight. WAC 173-303-690 incorporates the provisions of 40 CFR 264, Subpart AA, *Standards for Owners and Operators of Hazardous Waste Treatment, Storage, and Disposal Facilities – Air Emission Standards for Process Vents*, by reference. The WTP does not employ any of these listed devices or processes; therefore, the WTP is not subject to regulation under Subpart AA. Refer to 24590-WTP-RPT-ENV-01-001, Rev 0, *RCRA Subpart AA Applicability*, for the regulatory analysis that resulted in this conclusion.

3A.2.~~3.~~4.5.2 Air Emission Standards for Equipment Leaks (Subpart BB)

~~WAC 173-303-691~~WAC 173-303-691, *Dangerous Waste Regulations – Air Emission Standards for Equipment Leaks*, applies to facilities that treat, store, or dispose of hazardous waste, and regulates air emissions from equipment that contains or contacts hazardous wastes with organic concentrations of at least 10 percent by weight~~. WAC 173-303-691 incorporates 40 CFR 264.1051 through 1065 (Subpart BB)~~ (wt%). WAC 173-303-691 incorporates 40 CFR 264, Subpart BB, *Standards for Owners and Operators of Hazardous Waste Treatment, Storage, and Disposal Facilities – Air Emission Standards for Equipment Leaks*, by reference. This provision does not apply to the WTP, because the WTP will not accept wastes with organic concentrations at or above 10 ~~percent by weight.~~wt%. (refer to Section 3A,3,2). Compliance with this provision will be documented through analysis, as described in ~~Section~~ Section3A.3.~~4.1~~2. ~~.~~

3A.2.3.4.5.3 Air Emission Standards for Tanks, Impoundments, and Containers (Subpart CC)

The regulations specified under ~~WAC 173-303-692 and 40 CFR Part 264 Subpart CC~~WAC 173-303-692, *Dangerous Waste Regulations – Air Emission Standards for Tanks, Surface Impoundments, and Containers*, and 40 CFR 264, Subpart CC, *Standards for Owners and Operators of Hazardous Waste Treatment, Storage, and Disposal Facilities – Air Emission Standards for Tanks, Surface Impoundments, and Containers*, incorporated by reference, do not apply to the WTP mixed waste tank systems and containers. These tanks and containers are excluded under WAC 173-303-692(1)(b)(vi) because they qualify as waste management units ~~that are ""~~"…used solely for the management of radioactive dangerous waste in accordance with all applicable regulations under the authority of the Atomic Energy Act and the Nuclear Waste Policy Act~~" and are excluded under WAC 173-303-692(1)(b)(vi)."~~ Containers or tanks bearing ~~non-radioactive~~nonradioactive, dangerous waste~~, such as~~ (e.g., maintenance and laboratory waste~~,~~) that are not excluded under WAC 173-303-692(1)(b)(ii) or 40 CFR 264.1082(c) will comply with the container and tank standards specified under 40 CFR 264, Subpart~~-~~ CC.

3A.3.0 WASTE ACCEPTANCE ~~[C-1, C-2]~~

The waste feed to be transferred from the DST system unit to the WTP will undergo several stages of review before acceptance. The ~~DST system unit~~Tank Operations Contractor will provide the WTP with a waste profile for the feed ~~batch~~campaign staged for transfer to the WTP~~. If requested, (~~the ~~DST system unit will also provide an aliquot of the split~~ sample ~~of the~~will be drawn from a location identified in Figure 4A-1 of Appendix 4A as S1). A waste campaign is a volume of waste feed ~~for waste verification analysis performed~~staged by the ~~WTP. Verification analytical~~Tank Operations Contractor, consisting of multiple batches, that is to be treated using a similar processing strategy. Analytical data on the waste feed provided by the ~~DST system unit~~Tank Operations Contractor will be ~~accepted~~used by the WTP for waste acceptance purposes. During sampling and analysis for ~~verification~~waste acceptance, the waste feed will remain within the control and responsibility of the ~~DST system unit~~Tank Operations Contractor.

After WTP personnel determine that the ~~verification analysis~~analytical results ~~meet~~indicate the waste acceptance criteria~~,~~ are met, DOE will be notified and the ~~DST system unit~~Tank Operations Contractor will be authorized in writing to transfer the waste feed through double-walled pipes to LAW Concentrate Receipts Vessels (CRV) or PT Facility feed receipt tanks (Waste Feed Receipt Process System, FRP) located inside the WTP. The transfer will be assisted by flush water to clear the transfer lines after a waste transfer. After transfer, the WTP will compare the volume of waste feed and flush water transferred from the DST feed staging tank with the volume received ~~into the~~by WTP ~~feed receipt tanks. This will~~. The waste transfer is via a closed system with no additions (with the exception of flush water), so volume will be used confirm that the waste feed received corresponds to the waste feed ~~that was~~ accepted for transfer.

The steps involved in evaluating and accepting the waste feed into the WTP are summarized ~~in Table B1-1, and are described~~ in the following sections. Also discussed in the following sections is the rationale for the removal of dangerous waste numbers D001 (ignitable) and D003 (reactive) from the waste feed, and the selection of analytical laboratories.

Dangerous waste will be managed in a way that will preclude adverse reaction or interference with the WTP treatment process.

3A.3.1 Waste Feed Acceptance Process ~~Designation~~

~~Waste numbers described in the *Double-Shell Tank System Unit Permit, Operating Group 12, Addendum B, Waste Analysis Plan* (DOE-RL 2009) are applicable to the waste feed. A list of these dangerous waste numbers is shown in Table B1-2. Table B1-2 includes multi-source leachate (F039) as a waste derived from non-specific source wastes F001 through F005. Waste feed received from the DST system unit is not expected to exhibit the characteristics of ignitability (D001) or reactivity (D003), based on process knowledge. Section 3.6 describes the process knowledge that will be used to demonstrate that the waste feed is not ignitable or reactive.~~

~~**3.2 WASTE FEED Acceptance Process [C-3A]**~~

For each waste feed ~~batch~~campaign, the waste acceptance process is summarized in ~~Table B1-1,~~Table 3A-1, and is discussed in the remainder of this section.

3A.3.~~2~~1.1 Waste Feed Profile ~~[C-2a(3)]~~

The ~~DST system unit~~Tank Operations Contractor will complete a profile of the waste feed ~~batch~~campaign before making a transfer of ~~that~~a batch to the WTP~~.~~ (a batch is a portion of a waste campaign with similar physical and chemical properties where the required waste processing parameters do not vary). The content and format of the profile will be established prior to the transfer of waste feed. ~~An example~~The following are examples of the information that will be provided in the profile ~~is~~:

- General information~~, such as~~ (e.g., the identification of the source DST tank from which the transfer will be made and the date of the proposed transfer~~.~~)
- Physical properties of the waste feed~~, such as~~ (e.g., the proposed volume of ~~the~~each batch transfer and the presence or absence of a separate visible organic layer~~.~~)
- Historical analytical data~~, such as~~ (e.g., total organic carbon ~~([~~TOC~~).~~])
- Dangerous waste information~~, such as~~ (e.g., the designation of dangerous waste numbers~~.~~)
- ~~•~~ Land ~~disposal restriction~~ Disposal Restrictions (LDR) information~~.~~

~~**3.2.2 Waste Feed Verification**~~

~~At the request of the WTP, the DST system unit will supply a split sample aliquot of the staged waste feed for verification analysis. The aliquot will be analyzed by the WTP for the waste acceptance criteria parameters. The verification process is discussed in Section 3.3, and the waste acceptance criteria for verification are discussed in Section 3.4. If the waste acceptance criteria information is provided by the DST system unit for the staged waste feed, then the WTP will not need to repeat analyses for the provided information.~~

~~3.2.3~~As waste stream disposition requirements are identified, individual waste profiles will be developed in a joint effort between the WTP, Tank Operations Contractor, and the DOE.

3A.3.1.2 Preshipment Review

~~Verification analytical~~Analytical information will be obtained for each waste feed ~~batch whether~~campaign as provided by the ~~DST system unit or determined by the WTP through analysis~~

~~of the DST split sample aliquot~~Tank Operations Contractor. The purpose of the preshipment review is to evaluate the ~~verification~~ analytical results to ensure compatibility and acceptability of the waste feed before it enters the WTP. If the ~~verification~~ analytical results ~~are within~~indicate the waste meets waste acceptance criteria ~~limits~~, then the waste will be accepted for treatment. If the ~~verification~~ analytical results are outside of the waste acceptance criteria, then the ~~DST system unit~~Tank Operations Contractor will be notified that the waste feed does not conform. Actions in response to ~~non-conformance~~nonconformance are addressed in Section ~~3A.3.2.4~~3A.3.1.3.

The WTP will perform the preshipment review to ensure the waste acceptance criteria are met, and that sufficient storage capacity exists for the waste feed and subsequent post-transfer flush water. Following successful completion of the preshipment review~~,~~ including the resolution of any ~~non-conformance~~nonconformance, a representative of the WTP will notify ~~DST system unit~~DOE and Tank Operations Contractor personnel in writing that the WTP is ready for a waste feed transfer. The position title of the WTP representative will be provided prior to the commencement of WTP operations. The two parties will agree on the waste feed transfer date, as well as any other pertinent information.

3A.3.~~2.4~~.3 ~~Non-Conformance~~ Nonconformance Action ~~[C-3b, C-3c]~~

Confirmatory action~~, such as~~ (e.g., re-analysis and data review~~,~~) will be performed for each ~~verification~~ analytical result that does not initially meet the acceptance criteria presented in ~~Table B1-3.~~Table 3A-2. Re-analysis of a sample that fails an acceptance ~~criteria~~criterion will consist of two repeat analyses for the failed criteria. If both of the repeat analyses pass, then the sample will be considered to meet that acceptance criteria. If one or both of the repeat analyses fail, the waste will be considered ~~non-conforming.~~nonconforming. If the waste feed is determined to be ~~non-conforming~~nonconforming, then the ~~waste is returned to tank farms. The~~ WTP, the ~~DST system unit~~Tank Operations Contractor, or both, will determine and execute corrective actions necessary to be able to transfer ~~back to WTP to~~and process the waste feed. Such actions may include:

- Waste feed adjustment (blending) to meet the WAC requirements
- Change acceptance criteria requirements if there is no impact to the WTP design, safety basis, or permit requirements (on a case-by-case basis)

If no feasible alternative is found and the feed cannot be accepted, the following actions will be implemented:

- Transfer to an alternative treatment
- Continued waste storage until an alternative is identified

The ~~non-conformance~~nonconformance decisions, corrective actions ~~and~~, supporting data, ~~along with~~and the names and titles of the individuals making these decisions~~,~~ will be documented and retained as a quality assurance (QA) record, according to procedures described in ~~the~~Appendix 3B, *Quality Assurance Project Plan for the Waste Analysis Plan* (~~QAPjP), Appendix 3B.~~24590-WTP-RPT-ENV-01-002) (herein referred to as the "QAPP").

3A.3.~~2.5~~1.4 Waste Feed Transfer

Waste feed transfer will be coordinated between the DST system unit and the WTP. Prior to waste feed transfer, the WTP will ensure that waste feed transfer systems are operational. These systems include~~,~~ (but are not limited to) the following:

- Pipeline interstitial leak detection~~.~~
- ~~Feed receipt~~CRV or FRP tank level measurement equipment~~.~~
- ~~Feed receipt~~CRV or FRP tank ventilation~~.~~

Once the transfer systems are confirmed as operational, the ~~DST system unit~~Tank Operations Contractor will transfer the waste feed to the ~~WTP feed receipt tanks~~LAW CRV or PT Facility FRP vessels through a double-walled pipeline. The ~~DST system unit~~Tank Operations Contractor will water flush the pipeline after the transfer is complete.

3A.3.~~2.6~~1.5 Waste Feed Confirmation ~~[C-2a, C2a(1)]~~

The purpose of confirmation is to ensure that the waste feed received into the WTP is the same waste feed that was accepted for transfer. The method used for confirmation will be a comparison of the volume removed from the DST system unit feed staging tank with the volume received into the ~~WTP feed receipt tanks. The tank~~LAW CRV or PT Facility FRP vessels. The vessel volume measurement systems for the DST system unit and the WTP are discussed in the following sections. Because the waste transfer is via a closed system with no additions (with the exception of flush water), volume will be used confirm that the waste feed received corresponds to the waste feed accepted for transfer.

3A.3.~~2.6~~1.5.1 Confirmation Frequency ~~[C-2d]~~, Measurement Locations, and Measurement Methods

Volume measurements will be made from the DST system unit feed staging vessel/tank and the ~~WTP feed receipt tanks~~LAW CRV or PT Facility FRP vessels for each waste feed transfer. ~~The locations of the waste feed confirmation measurements are identified on Figure B1-1 as S1 for the DST system feed staging tank, and S2 for the WTP waste feed receipt tanks.~~

The method for volume measurement at both the DST system unit feed staging vessel/tank ~~and~~, the ~~WTP feed receipt tanks~~CRV or FRP vessels will be tank level measurements taken before and after waste feed transfer. The volume is then calculated from the tank level differences, taking into account the volume of the line flush water.

3A.3.~~2.6~~1.5.2 Confirmation Volume Reconciliation

The WTP and the ~~DST system unit~~Tank Operations Contractor will reconcile any differences between the measured waste volume transferred out of the DST staging tank and the measured volume received in the ~~WTP waste feed receipt~~FRP system, including top-off transfers.

3.3 WASTE FEED VERIFICATION PROCESS

The purpose of verification is to determine whether the DST waste feed staged for transfer can be properly managed in the WTP. Appropriate and reliable analytical information to make this determination will be obtained through the activities discussed in the following sections.

3.3.1 Verification Sampling and Frequency [C-2c, C-2d]

At the request of the WTP, the DST system unit will provide one split sample aliquot for each batch of waste feed prior to transfer to the WTP. The sampling location for the waste feed verification is identified on Figure B1-1 as sample point S1.

Verification analyses, which are the waste acceptance criteria, are listed in Table B1-3, and discussed in Section 3.4. Methods for selecting a laboratory and establishing laboratory quality assurance (QA) and quality control (QC) procedures are addressed in Section 3.5. Detailed QC information is provided in the QAPjP.

3.3.2 Verification Sampling Methods [C-2c]

The verification split sample aliquot of the DST waste feed staged for transfer to the WTP will be collected as described in Section 9.2 of the *Regulatory Data Quality Objectives Optimization Report (RDQO Optimization) (24590-WTP-RPT-MGT-04-001).*

3.3.3 Sample Preservation, Storage and Holding Times

Sample preservation, storage, and holding times for the sample collected from the DST staging tank for verification analysis are described in Section 9.7 of the *RDQO Optimization (24590-WTP-RPT-MGT-04-001).*

3.3.4 Sampling Quality Assurance and Quality Control [C-2a(2)(b)]

Quality assurance and quality control for verification sampling activities performed by the DST system unit are addressed in Sections 9.6 of the *RDQO Optimization (24590-WTP-RPT-MGT-04-001).* Analytical laboratory quality assurance and quality control are discussed in Section 3.5.2.1 of this WAP.

3.3.5 Selection of Verification Analytes [C-2a]

The selected analytes for waste feed verification are:

- Total organic carbon (TOC).
- Polychlorinated biphenyls (PCBs).
- pH.
- Compatibility.

The analytical methods and waste acceptance criteria for each of these analytes are listed in Table B1-3 and discussed in Section 3.4.

~~The list of analytes for waste feed verification is described in the *RDQO Optimization (24590-WTP-RPT-MGT-04-001)* and will be re-evaluated as a result of the environmental risk assessment, currently under development and scheduled to be finalized during cold commissioning LAW and HLW demo tests. The RDQO Optimization process is subject to periodic evaluation and may periodically affect the list of analytes.~~

~~3.3.6 Selection of Verification Analytical Methods [C-2a(2)]~~

~~Table B1-3 presents the currently selected SW-846 (EPA 1997a) preparation and analytical methods that will be applied to the waste feed to verify that it is acceptable for treatment by the WTP. Any applicable analytical method provided in WAC 173-303-110 may be used for analysis. If an analytical method used for regulatory purposes other than the methods provided in WAC 173-303-110 is proposed, approval of the method will be requested from Ecology, according to WAC 173-303-910(2). The proposed analytical method will not be used for regulatory purposes until Ecology authorizes the method. If modifications to a procedure are needed, they will be requested in accordance with WAC 173-303-110(4). Specific technical guidance for modification of SW-846 (EPA 1997a) methods will be obtained from *Guidance on Testing Requirements* (NRC, EPA 1997), *Preparation of Radioactive Mixed Waste Samples* (ASTM 1990), *Methods of Chemical Analysis* (PNL 1993), as well as recent publications (for example, Mong and others, 1997). The SW-846 (EPA 1997a) "method hotline" indicates that sample size is not a method modification, unless detection limits are not sufficient for making decisions.~~

~~3.4~~ 3A.3.2 Waste Acceptance Criteria

The following sections discuss the specific waste acceptance criteria that will be used for ~~verification of~~ the DST waste feed. ~~If the waste acceptance criteria information is provided by the DST system unit for the staged waste feed, then the WTP will not repeat analyses for the provided information.~~ Waste feed received into the WTP that meets the waste acceptance criteria will be treated by the WTP. The WTP feed acceptance criteria described in this section are consistent with those provided in the RDQO Optimization Report (24590-WTP-RPT-MGT-04-001). The RDQO Optimization Report describes the constituents of regulatory concern and analytical methods appropriate for the characterization of the waste feed. The RDQO Optimization Report is designed to address the regulatory needs of the WTP. The waste acceptance parameters are as follows:

- Total organic carbon
- Polychlorinated biphenyls (PCB)
- pH
- Compatibility
- Selected metals
- Selected organic compounds
- Selected anions
- Ammonia
- Cyanide

~~3.4~~Collection of samples is performed to facilitate contamination control and to minimize sampler exposure. The RDQO Optimization Report specified a minimum 350 g of sludge solids (if present in the tank) and 500 mL of liquid to complete the regulatory compliance testing for each WTP feed tank, however, it is anticipated that 300 mL slurry containing at least 30 g of solids per HLW sample, and 170 mL of supernatant liquid per LAW sample shall be sufficient (CCN 233666, *Sample Volume Required for Analyses of Feed Samples - WAC DQO*). Per the sampling event requirements described in the RDQO Optimization Report, the specific sample volume and number of samples to be collected are to be specified in the Tank Sampling and Analysis Plan (TSAP) for the corresponding staged feed. The sample material is collected in the field, and then subaliquoted (and centrifuged, if necessary) in the laboratory under controlled conditions to further reduce exposures. For tank waste samples, typically glass bottles with Teflon-lined screw caps or polyethylene bottles are used to collect samples. These are then subsampled and stored in screw cap glass vials (for organic analyses) and in polyethylene vials (for elemental and radiochemical analyses) during sample preparation and analyses in the laboratory. Per the guidelines established using the Performance Based Measurement System[2] approach and safe handling procedures required to limit radiological dose, sample sizes may be reduced from those recommended in the cited analyses.

The following analytes shall be sampled and analyzed in waste feed samples to provide data to assess waste feed compliance with waste acceptance criteria. Table 3A-3 provides a summary of the waste analysis parameters, analytical methods, acceptance criteria and a description of action to undertake should a nonconformance occur.

3A.3.2.1 Total Organic Carbon ~~[C-2a(1), C-2a(2)]~~

The waste feed will be analyzed to determine the TOC. The TOC has been chosen for analysis of the waste feed to ensure that the WTP is not required to comply with Subpart BB ~~found in WAC 173-303-691. Proportionate liquid and solid aliquots of the split sample will be taken for this analysis.~~ of WAC 173-303-691.

The analytical method is SW-846 ~~Method 9060 (EPA 1997a),~~ *Test Methods for Evaluating Solid Waste, Physical Chemical Methods* (EPA 2014), Method 9060A or ~~EPA~~ Method 415.2 (EPA ~~1997b~~1997), using persulfate oxidation. The sample aliquot volume requirements for this analysis are expected to be ~~less than 1 milliliter~~3 mL for liquid, and ~~0.1 gram~~2 g or less for solids. This method typically measures TOC to levels of about 1 ~~part per million.~~ppm. The criteria for waste acceptance ~~level for this verification process~~ is 10 ~~percent~~wt% TOC~~. In order to preserve the liquid sample in accordance with Method 9060 (EPA 1997a), the liquid sample will be diluted from 1 part per hundred to 1 part per thousand in water, with enough Sulfuric Acid added to maintain the pH at less than 2 pH units. The dilution will be performed because of the high alkalinity and the need to acidify for preservation. Even with the dilution, Method 9060 (EPA 1997a~~, or less. Method 9060 (EPA 2014) will meet the 1~~ percent~~% detection limit, as given in ~~Table B1-3.~~Table 3A-2. The solids will be analyzed separately for TOC~~, and will not be acidified or diluted.~~.

[2] In the Federal Register, EPA defines the *Performance Based Measurement System* as "a set of processes wherein the data quality needs, mandates or limitations of a program or project are specified, and serve as criteria for selecting appropriate methods to meet those needs in a cost-effective manner." (FRL-5903-2, Federal Register Vol. 62, No. 193).

3A.3.42.2 Polychlorinated Biphenyls ~~[C-2a(1), C-2a(2)]~~

~~Portions~~Most of the Hanford tank waste ~~may contain PCBs~~contains polychlorinated biphenyls (PCB) at concentrations below 50 ~~parts per million.~~ ppm. These are regulated under the *Toxic Substances Control Act* ~~(TSCA *of 1976*),~~ (15 USC 2601 et seq.), and codified in ~~40 CFR 761.61~~40 CFR 761.61, *Polychlorinated Biphenyls (PCBs) Manufacturing, Processing, Distribution in Commerce, and Use Prohibitions – PCB Remediation Waste*, as PCB remediation waste ~~(Fitzsimmons—~~agreed upon in the *Framework Agreement for Management of Polychlorinated Biphenyls (PCBs) in Hanford Tank Waste* (Ecology, EPA, and ~~others,~~ DOE 2000). The waste feed ~~verification~~ sample aliquots will be analyzed to ensure that the waste feed contains less than 50 ~~parts per million~~ppm PCBs. This acceptance criteria of 50 ~~parts per million~~ ppm PCBs may change as a result of the risk-based approval of PCBs in the ~~Hanford~~ tank waste that is being prepared jointly by ~~DOE,~~ Ecology, EPA, and ~~EPA~~DOE.

The sample will be separated into solid and liquid phases and analyzed for PCBs by SW-846 Method ~~8082~~ 8082A (EPA ~~1997a~~ 2014). Modification of the basic extraction procedure given in this method is expected to be needed to decrease the sample size and allow the extraction to be performed in a shielded glovebox. It is anticipated that a sample size of ~~0.5 to 1 gram~~2 g would be required for solids, and ~~10 to 20 milliliters~~2 mL for liquids. If any single liquid sample contains more than 5 ~~percent~~% solids after centrifuging, the liquid and solid will be analyzed separately. Refer to ~~B1-3~~Table 3A-2 for the acceptance criteria.

3A.3.42.3 ~~Waste Feed~~ pH ~~[C-2a(1), C-2a(2)]~~

The measurement of pH will ensure that ~~a batch of~~the waste feed is compatible with the WTP materials of construction and treatment processes. Method 9040C of SW-846 ~~Method 9040~~ (EPA ~~1997a~~2014) will be used to measure pH. The estimated sample size is 5 ~~milliliters~~ mL. The decision criteria is greater than pH ~~-~~ 7, as presented in ~~Table B1-~~Table 3A-2.~~3.~~

~~3~~2.4~~.4 Waste Feed~~ Compatibility ~~[C-2a(1), C-2a(2)]~~

The waste feed will be evaluated for compatibility with the residual aqueous waste in the ~~WTP feed receipt tanks~~LAW CRV or PT Facility FRP vessels, before being accepted into the WTP. These evaluations will focus on the potential for a waste stream to react in an uncontrolled fashion with another waste ~~(40 CFR 264,~~(40 CFR 264, Appendix V, ~~"~~*Standards for Owners and Operators of Hazardous Waste Treatment, Storage, and Disposal Facilities – Examples of Potentially Incompatible Wastes*~~").~~). Although problems associated with co-mingling aqueous waste feeds are not expected, this evaluation will ensure the compatibility of two or more aqueous waste feeds from different DST system unit tanks.

Waste feed compatibility will be evaluated using ~~the American Society for Testing and Materials Method (~~ASTM~~)~~ D5058-90, *Standard Test Methods for Compatibility of Screening Analysis of Waste* ~~(ASTM 2001).~~ This evaluation provides three test methods to determine compatibility. Test method A, using a reduced sample volume, will be applied to the proposed DST system unit waste feed and the WTP feed receipt tank residual waste. This method prescribes the mixing of aliquots of the two waste streams and an evaluation of any temperature change of the mixture.

The method also calls for a visual examination to determine whether viscosity has increased. ~~-~~These evaluations will be performed to test for potential incompatibilities that could adversely affect the management of the waste in the WTP.

The recommended sample volume for this test method is 150 to 300 ~~milliliters~~ mL. The sample size will be decreased to 10 ~~milliliters~~ mL from each waste feed ~~source,~~type (supernate and sludge, if present), for a total of 20 ~~milliliters~~ mL of the combined waste feeds for waste minimization, and will comply with the as low as reasonably achievable ~~(ALARA)~~ philosophy~~.~~, referred to as "ALARA."

3A.3.2.5 Metals

The waste feed will be evaluated for toxicity characteristic metals, underlying hazardous constituent metals and metals of interest for potential future delisting of IHLW. Waste feed metals will be determined using Methods 7470A or 7471B of SW-846 (EPA 2014) for mercury and Method 6010D of SW-846 (EPA 2014) for metals other than mercury. The waste feed metals are the following:

- Antimony
- Arsenic
- Barium
- Beryllium
- Cadmium
- Chromium
- Copper
- Lead
- Mercury
- Nickel
- Selenium
- Silver
- Thallium
- Vanadium
- Zinc

The recommended sample size for metals (except mercury) is 3 mL and the recommended sample volume for mercury is 1 mL (or 2 g and 1 g of solids for metals and mercury analysis, respectively).

3A.3.2.6 Organic Chemicals

The waste feed will be evaluated for organics. Three SW-846 (EPA 2014) methods will be used. Method 8270D will be used for analysis of semivolatile compounds; Method 8260B will be used for analysis of volatile compounds; and Method 8081B will be used to measure organochlorine pesticides. The recommended sample size for volatile organic compounds is 10 mL, and the recommended sample size for semivolatile organics and pesticides is 3 mL. These analytical methods are "catch-all methods," meaning the methods are capable of detecting multiple constituents as available in the analytical library. The requested analysis will include the request for reporting of all quantifiable constituents, with the minimum as specified by the analytical method.

3A.3.2.7 Anions

Waste feed will be evaluated for the following anions using Method 9056A of SW-846 (EPA 2014):

- Fluoride
- Chloride
- Nitrite
- Bromide
- Nitrate
- Phosphate
- Sulfate

The recommended sample size for anions analysis is 20 mL of liquid and 20 g of solid.

~~3.5 ANALYTICAL LABORATORY~~

~~The following sections discuss the WTP's onsite analytical laboratory and the quality assurance and quality control that will be implemented for analytical activities and for sampling performed by the WTP. Also discussed is the selection of other analytical laboratories.~~

~~3.5.1 Waste Treatment Plant Analytical Laboratory~~

~~The WTP will establish and operate an onsite analytical laboratory. A laboratory quality assurance (QA) program meeting the requirements of SW-846, Chapter 1, Section 4.4 (EPA 1997a) will be prepared before initiation of laboratory operations.~~

~~3.5.2 Establishing Quality Assurance and Quality Control Procedures [C-2a(2)(b)]~~

~~The following sections discuss the quality assurance (QA) and quality control (QC) for the analytical laboratory and for sampling operations.~~

~~3.5.2.1 Laboratory QA and QC~~

~~The WTP laboratory will conduct its operation in a way that ensures that reliable information is provided on request. The policies and procedures described in the QAPjP will be implemented to ensure reliable data.~~
~~Laboratory equipment and instrumentation will meet the requirements and specifications of the test methods and other procedures described in the QAPjP.~~
~~The QAPjP will describe or refer to laboratory activities that may affect data quality. Any deviation from an established procedure during a data collection activity will be documented.~~
~~QC procedures will be available for the indicated activities as described in the QAPjP.~~
~~The QAPjP describes how the following elements of the QC program will be implemented:~~

- ~~Sample control.~~
- ~~Analyses.~~
- ~~Measures of precision, accuracy, and representativeness.~~
- ~~Deviation.~~
- ~~Corrective action.~~
- ~~Data reduction and validation.~~

- ~~Reporting.~~
- ~~Generation, control, and disposal of records.~~

~~The QA organization will conduct reviews consisting of internal and external assessments to assure that QA/QC procedures are in use and that laboratory staff conform to these procedures. QA reviews will be conducted as deemed appropriate and necessary. Non-conformances will be documented.~~

~~3.5.2.2 Waste Treatment Plant Sampling QA and QC~~

~~Sampling procedures, equipment, and sample preservation and handling requirements are discussed in the QAPjP. Policies and procedures commensurate with the complexity and importance of data will be developed and implemented.~~

~~Equipment, instrumentation, and supplies at the sampling site will be identified in written procedures that will be developed to accomplish the activities planned. The procedures will typically include the following information:~~

- ~~Sampling equipment.~~
- ~~Sample management.~~
- ~~Reagent and standard preparation.~~
- ~~Decontamination equipment.~~
- ~~Sample collection.~~
- ~~Field measurements.~~
- ~~Equipment calibration and maintenance.~~

~~3.5.3 Selecting Other Analytical Laboratories~~

- ~~The WTP may~~

3A.3.2.8 Ammonia

Waste feed (supernate) will be evaluated for ammonia using EPA Method 350.3 (EPA 1989) or Standard Method 4500-NH_3-F (APHA 1992). It is anticipated that 0.5 mL of liquid will be necessary for the analysis. Solids are not analyzed for ammonia.

3A.3.2.9 Cyanide

Waste feed will be evaluated for cyanide using Methods 9012B or 9010C / 9014 of SW-846 (EPA 2014). The recommended sample size for cyanide analysis is 1 mL of liquid and 0.2 g of solid.

3A.3.3 Analytical Services

The WTP will contract with other ~~Hanford Site~~ laboratories to provide analytical services, as necessary, based on a review of the ability of each laboratory to provide acceptable data for the types of waste handled by the WTP. The review will include an onsite surveillance of the laboratory facilities, and a review of its documentation. Evaluation of candidate laboratories will be based on the following criteria:

- Licenses or permits issued by the applicable government authority, allowing the laboratory to handle waste samples that contain chemical and radiological components~~.~~
- Laboratory accreditation~~.~~

- Analytical capacity, including number and type of analytical instruments, sample preparation facilities, and sufficient uncommitted capacity, or a commitment to procure sufficient capacity to handle the sample load~~.~~
- Adequate number of qualified technical staff~~.~~
- Demonstrated history of performing acceptable analyses~~.~~
- Adequate sample tracking system (refer to Section ~~7~~ 3A.8.2~~, *Sample Tracking*).~~)
- A demonstrated QA program ~~that meets the requirements of SW-846, Chapter 1, Section 4.4 (EPA 1997a).~~and participation in performance evaluation

3A.3.~~6~~4 Waste Feed Designation

Waste numbers described in the ~~*Double-Shell Tank*~~*DST System* ~~*Unit/ 204-AR Waste Unloading Station – Dangerous Waste*~~ *Permit*~~, *Operating Group 12, Addendum B, Waste Analysis Plan*~~ *Application, Part A Form* (Ecology 2009) are applicable to the waste feed. These dangerous waste numbers are listed in ~~Table B1-2.~~ Table 3A-2.

The waste feed will carry the numbers for ignitable (D001) and reactive (D003) waste. However, based on past process knowledge~~,~~ ~~—~~which includes the age, temperature, history, and chemical composition of the waste feed stored in the DST system unit~~,~~ ~~—~~it is not expected to exhibit the characteristics of ignitability or reactivity found in ~~WAC 173-303-090.~~WAC 173-303-090, *Dangerous Waste Regulations – Dangerous Waste Characteristics*. After the waste feed has been received into the ~~WTP~~PT Facility, this process knowledge will be used to remove the dangerous waste number for ignitability and reactivity.

When the WTP is configured for DFLAW operations, the Tank Operations Contractor will ensure that LAW feed does not carry waste codes D001 and D003 when transferred to the LAW Facility. As previously discussed, if the waste is pretreated or conditioned to meet LAW Facility acceptance criteria before transfer to WTP, which will include not having the D001 and D003 codes, the waste may be transferred directly to the LAW Facility under the DFLAW configuration. The following discussions only apply to waste feed to be transferred to the PT Facility in the baseline configuration.

Precautions taken to prevent accidental ignition or reaction of ignitable or reactive waste will be in accordance with WAC 173-303-395(1) (a through d), and will be documented in the WTP operating record in accordance with WAC 173-303-395(1)(c), as discussed in the ~~QAPjP~~QAPP. Tank inspection is addressed in ~~Appendix 6A~~Chapter 6 of the DWP.

3A.3.~~6~~4.1 Ignitable Waste

Four properties of a waste found in WAC 173-303-090(5)(a)(i through iv) are used to determine whether a waste exhibits the characteristic of ignitability. These four properties are listed in ~~Table B1-4,~~ and are discussed below.

~~WAC 173-303-090(5)(a)(i) states, in part: "It~~ WAC 173-303-090(5)(a)(i) states that waste is ignitable if the sample waste "…is a liquid, other than an aqueous solution containing less than 24 percent alcohol by volume, and has a flash point less than 60~~°~~ degrees C (140~~°~~ degrees F~~)." The~~)…." Report HNF-SD-WM-SAR-067, *Tank Waste Remediation System Final Safety Analysis Report* (DOE-RL~~-~~ 1999), identifies 241-C-103 as the only tank, at this time, that contains a separate organic solvent phase. The

flash point of the separate organic solvent phase on ~~Tank~~tank 241-C-103 was determined to be 118 ºC ~~(Pool and Bean,~~ in report PNL-9403, *Waste Tank Organic Safety Project: Analysis of Liquid Samples from Hanford Waste Tank 241-C-103* (PNL 1994). This flash point is well above the regulatory threshold of 60 ºC for determining the characteristic of ignitability and represents a worst~~-~~-case flash point for the liquid portion of the waste feed. ~~Since~~Because the liquid portion of the waste feed is aqueous and contains a maximum of 10 ~~percent total organic carbon~~wt% TOC, the flash point test will not be performed on the aqueous waste feed.

WAC 173-303-090(5)(a)(ii) property of ignitability pertains to material that is not a liquid. Portions of the Hanford tank waste are in a solid (crust and salt cake) and semi-solid (sludge) form. Process knowledge indicates that this property of ignitability does not apply to the tank waste. Throughout the history of the ~~tank farms (Blankenship,~~ Tank Farms—according to memorandum 82331-90-313, *Double-Shell Tank Waste Designation* (Westinghouse 1990~~),)~~—there has been no evidence of the solid or ~~semi-solid~~semisolid portions of the tank waste ~~"~~"…causing fire through friction, absorption of moisture or spontaneous chemical changes~~,~~ and, when ignited, burns so vigorously and persistently that it creates a hazard" (WAC 173-303-090[5][a][ii]).

WAC 173-303-090(5)(a)(iii) pertains to compressed gas. This definition does not apply ~~since~~because the Hanford tank ~~farm~~ waste is not a compressed gas.

WAC 173-303-090(5)(a)(iv) states~~: "It~~ that waste is an oxidizer~~,~~ if it ~~is defined as such in 49 CFR 173.127 and 173.128".~~"…yields oxygen readily to stimulate the combustion of organic matter." According to ~~49 CFR 173.127~~49 CFR 173.127, *Shippers – General Requirements for Shipments and Packagings – Class 5, Division 5.1 – Definition and Assignment of Packing Groups*, an oxidizer is defined as "…a material that may, generally by yielding oxygen, cause or enhance the combustion of other materials." Nitrate and nitrite salts are present in the waste feed (~~Blankenship,~~ Westinghouse 1990) and can yield oxygen. However, ~~the~~report HNF-4240, *Organic Solvent Topical Report* (~~HNF-4240)~~CH2M Hill 2000), determined that the nitrate and nitrite in the DST waste will not cause or enhance the combustion of other materials. Thus, the DST waste does not meet the definition of an oxidizer. ~~The *Organic Solvent Topical* Report (~~HNF-4240~~)~~ was independently reviewed and accepted by the Chemical Reactions Subpanel of the Tanks Advisory Panel, the Defense Nuclear Facilities Safety Board staff, and the Oregon Office of Energy ~~(DOE-ORP 2000). ~~—which is documented in memorandum 00-SHD-066, *Closure of the Organic Solvent Safety Issue and Removal of the Organic Solvent Tanks from the Watchlist* (DOE-ORP 2000).

~~49 CFR 173.128~~49 CFR 173.128, *Shippers – General Requirements for Shipments and Packagings – Class 5, Division 5.2 – Definitions and Types*, defines organic peroxides and is not applicable to the waste feed.

The dangerous waste number D001 for ignitability will be removed from the waste feed after it is received into the ~~WTP~~PT Facility, based upon the previous discussions of process knowledge. Waste feed accepted in the DFLAW operations configuration will not carry the D001 code. The Tank Operations Contractor will ensure that treated LAW feed does not carry waste code D001 (ignitability) when transferred to the LAW Facility.

3A.3.64.2 Reactive Waste

WAC 173-303-090(7)(aWAC 173-303-090(7)(a)(i through viii) lists eight properties of a waste that would cause it to be designated as a reactive waste. The eight properties are listed in Table B1-5Table 3A-5 and are discussed in the following paragraphs.

WAC 173-303-090(7)(a)(i) describes a waste that is unstable and will undergo violent change. The Hanford tank waste has not exhibited a violent change during the history of the tank farmsTank Farms. Differential thermal analysis or differential scanning calorimeter analysis has been performed on the tank waste. These tests have shown that the waste does not react under thermal stress (Blankenship, Westinghouse 1990).

WAC 173-303-090(7)(a)(ii, iii, and iv) involveinvolves waste that, when mixed with water, produces hazardous reactions, or generates toxic gases, vapors, or fumes. SinceBecause the Hanford tank waste is already a water solution, it does not meet the following definitions that:: (ii) "It reacts violently with water",," (iii) . "It forms potentially explosive mixtures with water," or (iv) . "When mixed with water, it generates toxic gases, vapors or fumes in a quantity sufficient to present a danger to human health or the environment."

Hydrogen, ammoniaAmmonia, oxides of Nitrogennitrogen, and Methanemethane are generated in the Hanford waste tanks. These gases are generated primarily from the radiolytic decomposition of the waste and are not a result of mixing with water (Johnson, according to report HNF-SF-1193, Rev 1, *Flammable Gas Project Topical Report* (PNNL 1996). Nevertheless, flammable gases produced by the waste's radiolytic decomposition of the waste, and, to a lesser degree, thermolytic decomposition, will be managed at the WTP through ventilation of the vessels that contain the waste feed.

WAC 173-303-090(7)(a)(v) concerns the generation of toxic gases, vapors, or fumes when a cyanide- or Sulfidesulfide-bearing waste is exposed to pH conditions between 2 and 12.5, in a quantity sufficient to present a danger to human health or the environment. Hydrogen Cyanidecyanide and Hydrogen Sulfidehydrogen sulfide are the gases that would be generated from Cyanidecyanide- or Sulfidesulfide-bearing waste when exposed to acidic conditions. In 1985, the EPA published guidance for determining regulated thresholds for these gases as 250 milligrams per kilogram mg/kg of waste for Hydrogen Cyanidehydrogen cyanide and 500 milligrams per kilogram mg/kg of waste for Hydrogen Sulfide.hydrogen sulfide. Although these numerical thresholds were rescinded by the EPA via memorandum *Withdrawal of Cyanide and Sulfide Reactivity Guidance* (EPA 1998), they are still useful as benchmarks for determining the characteristic of reactivity and are still accepted by Ecology.

Thirteen tanks have been investigated by the Pacific Northwest National Laboratory under CH2M Hill Hanford Group, Inc.,, . (Project Number 41503,) for their potential to generate these gases at a pH between 2 and 12.5. Included in these thirteen tanks are the tanks scheduled for vitrification during the first ten 10 years of WTP operation. This report researched the analytical data for the concentrations of Cyanidecyanide and Sulfidesulfide in the supernatant and solids in the tanks, using the best basis inventory on the Tank Waste Information Network System database current to November 2000 (LMHC Lockheed Martin 1999). Analytical data for Cyanidecyanide was available, but no data was available for Sulfide sincesulfide because there is no history of Sulfidesulfide addition to the tank farmsTank Farms. Consequently, the author used total Sulfursulfur and sulfateSulfate concentration values for the evaluation. Standard chemistry principles were used to calculate the potential generation of Hydrogen Cyanidehydrogen cyanide and Hydrogen Sulfidehydrogen sulfide in acidic conditions. This

investigation determined that ~~Hydrogen Cyanide~~hydrogen cyanide and ~~Hydrogen Sulfide~~hydrogen sulfide would not be generated at the respective benchmark levels of 250 and 500 ~~milligrams per kilogram~~ mg/kg of waste for these tanks. Thus the waste feed contained in tanks scheduled for the first ~~ten~~ 10 years of WTP operation is not considered to be ~~Sulfide~~sulfide- or ~~Cyanide~~cyanide-bearing waste.

WAC 173-303-090(7)(a)(vi, vii, and viii) is concerned with waste that will detonate or explode. Process knowledge and history indicate that the Hanford tank waste does not detonate or explode. As mentioned previously, differential thermal analysis or differential scanning calorimeter analysis has been performed on the tank waste, showing that it does not react under thermal stress (~~Blankenship,~~ Westinghouse 1990). Finally, the tank ~~farm~~ waste is not regulated as an explosive in ~~49 CFR 173.50.~~49 CFR 173.50, *Shippers – General Requirements for Shipments and Packagings – Class 1 – Definitions.*

The ~~WTP will remove the~~ dangerous waste number- D003 for reactivity will be removed from the waste feed after it is received into the PT Facility, based upon the ~~above~~ previous discussions of process knowledge. Waste feed accepted in the DFLAW operations configuration will not carry the D003 code. The Tank Operations Contractor will ensure that treated LAW feed does not carry waste code D003 (reactivity) when transferred to the LAW Facility.

3A.4.0 WASTE FEED CHARACTERIZATION ~~[C-1, C-2]~~

This section describes the general characterization of waste to support assessment of applicable waste acceptance criteria. Prior to the transfer of DST waste feed, the ~~WTP~~Tank Operations Contractor will characterize the waste feed in conformance with the RDQO Optimization Report (24590-WTP-RPT-MGT-04-001). ~~After the the set of analytes are determined and methods are developed and approved by Ecology, the waste feed will be analyzed and the results used to characterize the waste.~~ The data quality objective process is an ongoing activity and may periodically affect the set of analytes and analytical methods. To date, the RDQO Optimization Report has been the basis for the selection of the of the waste acceptance criteria presented in Section 3A.3.2. The subsections below identify corresponding sections of the RDQO Optimization Report.

3A.4.1 Sampling Methods and Sampling Frequency ~~[C-2c, C-2d]~~

The samples collected for characterization of the ~~DST~~ waste feed staged for transfer to the WTP will be collected as described in Section 9~~.2~~ of the RDQO Optimization Report (24590-WTP-RPT-MGT-04-001). ~~One~~A minimum of one sample will be collected from the ~~DST~~ waste feed tank for characterization of the waste stored in that tank.

3A.4.2 Sample Preservation, Storage, and Holding Times

Sample preservation, storage, and holding times for the samples collect to support characterization of the DST waste feed are discussed in Section 9~~.7~~ of the RDQO Optimization Report (24590-WTP-RPT-MGT-04-001).

3A.4.3 Selection of Analytes ~~[C-2a(1)]~~

The analytes for characterization of the ~~DST~~ waste feed have been determined as a result of the RDQO Optimization Report (24590-WTP-RPT-MGT-04-001~~) processand~~). The analyte list will be ~~re-evaluated as a result of~~finalized after completing the environmental risk assessment, currently under development. These activities are scheduled to be completed prior to the commencement of cold operations, and will be used to ~~establish a~~verify the set of analytes described in Section 3A.4.0 as appropriate ~~to perform~~for characterization of the ~~DST~~ waste feed.

3A.4.4 Selection of Analytical Methods ~~[C-2a(2)(a)]~~

~~Identification of~~The analytical methods that will be used to obtain the necessary data for characterizing the DST waste feed ~~is~~are addressed in Section 9.8~~.3~~ of the RDQO Optimization Report (24590-WTP-RPT-MGT-04-001). ~~Modified SW-846 (EPA 1997a) methods, except for sample size or as otherwise identified in the RDQO Optimization (24590-WTP-RPT-MGT-04-001), will not be used for characterization until they are authorized by Ecology.~~

3A.4.5 Quality Assurance and Quality Control ~~[C-2a(2)(b)]~~

~~Quality assurance~~The QA and quality control (QC) for ~~DST~~ waste feed characterization are addressed in Sections 9.6 and 9.8~~.5~~ of the RDQO Optimization Report[3] (24590-WTP-RPT-MGT-04-001~~) report.~~). Additional QA and QC requirements for sampling and analysis in support of the characterization of the waste feed and the characterization of secondary waste streams are provided in Appendix 3B of this permit.

3A.5.0 Secondary Waste Streams

In addition to the vitrified glass product, the PT Facility's pretreatment processes and the Lab, EMF, LAW, and HLW facilities' vitrification processes will generate a variety of solid, liquid, and gaseous waste streams. Some of these waste streams include waste derived from the incoming feed from the DST system unit. Other wastes include spent materials used in processing the waste feed, such as rinsate and scrubber solutions that come into contact with the waste feed or its derivatives, and contaminated equipment. General facility operations and maintenance activities will also generate dangerous waste.

~~Waste streams regulated under WAC 173-303 (because of dangerous waste concerns) include the ILAW and IHLW, as well as miscellaneous secondary solid and liquid waste streams. Air emissions subject to regulation, commonly referred to as Subparts AA, BB, and CC, are discussed in Section 2.3.4. Other regulated air emissions are addressed under the permit applications to be developed under the Clean Air Act of 1990 (CAA 1990) and the Washington Clean Air Act of 1967 (WCAA 1967), and are not included in the following discussions.~~

[3] The RDQO Optimization Report, Section 9.6 "Quality Assurance" specifies compliance with NQA-1-1989, however, the WTP *Quality Assurance Manual* (24590-WTP-QAM-QA-06-001) updates this requirement and requires compliance with NQA-1-2000 (ASME 2000).

Section 5.1 describes the land disposal restriction (LDR) evaluation for the immobilized waste streams. Section 5.2This section describes the secondary waste streams generated by the WTP, including characterization of secondary waste, the associated sampling and analysis activities, and the ultimate treatment, storage, or disposal of regulated wasteTSD of regulated waste. Air emissions subject to regulation, commonly referred to as Subparts AA, BB, and CC, are discussed in Section 3A.2.4.5.1. Other regulated air emissions are addressed under the *Clean Air Act of 1990* (42 USC 7401 et seq.) and the *Washington State Clean Air Act of 1967* (RCW 70.94 et seq.) permits and are not included in the following discussions.

5.1 LAND DISPOSAL RESTRICTIONS EVALUATION FOR IMMOBILIZED WASTE

This section describes the approach for addressing the LDR program requirements applicable to the land disposal of ILAW and IHLW.

5.1.1 Land Disposal Restrictions Treatment Standards

Land disposal restrictions are codified in WAC 173-303-140, which incorporates 40 CFR Part 268 by reference. 40 CFR 268.40 identifies the treatment standards for the land disposal of a dangerous waste. It states:

> "(a) A waste identified in the table "Treatment Standards for Hazardous Wastes" may be land disposed only if it meets the requirements found in the table. For each waste, the table identifies one of three types of treatment standard requirements:
>
> (1) All hazardous constituents in the waste or in the treatment residue must be at or below the values found in the table for that waste ("total waste standards"); or
>
> (2) The hazardous constituents in the extract of the waste or in the extract of the treatment residue must be at or below the values found in the table ("waste extract standards"); or
>
> (3) The waste must be treated using the technology specified in the table ("technology standard"), which are described in detail in § 268.42, Table 1 – Technology Codes and Description of Technology-Based Standards."

The "total waste standards" and "waste extract standards" require repeated sampling and analysis of the waste to demonstrate that the dangerous constituents in the waste are at or below the values found in the table. These standards are appropriate for a limited dangerous waste stream, but are not a good choice for a mixed waste stream of extended duration because of repeated human exposure during sampling and analysis.

Table 1 – Technology Codes and Description of Technology-Based Standards (40 CFR 268.42) includes the technology standard HLVIT. At the request of DOE, the HLVIT treatment technology was promulgated by the EPA to treat the tank wastes at the Savannah River Site. According to the *Treatment Standards for Hazardous Wastes* table (40 CFR 268.40), HLVIT is the technology for the treatment of the following dangerous waste numbers from radioactive high-level wastes generated during the reprocessing of fuel rods:

- D002 – Corrosivity (pH)
- D004 – Arsenic
- D005 – Barium
- D006 – Cadmium

- ~~D007 – Chromium (total)~~
- ~~D008 – Lead~~
- ~~D009 – Mercury~~
- ~~D010 – Selenium~~
- ~~D011 – Silver~~

~~5.1.2 Treatment Standard for the Hanford Tank Waste~~

~~Similar to the treatment of the Savannah River Site tank waste, the treatment of the Hanford tank waste will require many years of WTP operation. Rather than repeated sampling and analysis of the waste to demonstrate LDR using the total waste standard or the waste extract standard, it would be appropriate to treat the Hanford tank waste to a specific treatment standard, such as the HLVIT treatment standard described above for the Savannah River Site tank waste. Consequently, the WTP will submit a land disposal restriction treatability variance petition to the EPA and Ecology to establish a new treatment standard that will be specific to the Hanford tank waste. The new treatment standard would specify vitrification as the land disposal treatment standard for Hanford double-shell and single-shell tank waste for the characteristic and listed waste numbers applicable to the Hanford tank waste.~~

~~As required by 40 CFR 268.44, *Variance from a treatment standard*, the petition will be submitted in accordance with the procedures specified in 40 CFR 260.20. The negotiated petition would be published in the Federal Register for public comment. After successful resolution of public comments, the EPA would promulgate a final rule establishing the treatment standard. The Hanford tank waste would then meet LDR through treatment by the promulgated treatment standard.~~

~~5.2~~ SECONDARY WASTE STREAMS

The WTP's primary mission is to vitrify the Hanford tank waste. This process will also generate a variety of secondary waste streams that must be properly managed. The management of secondary waste streams that will be regulated as dangerous waste is discussed in this section.

Secondary waste streams that will be transferred back to the DST system unit will be designated with waste numbers based upon process knowledge. Waste transferred to the DST system unit will meet the DST waste acceptance criteria.

Secondary waste streams are divided into solid waste streams (discussed in Section 3A.5~~.2~~.1) and liquid waste streams (discussed in Section 3A.5.2). Dangerous waste streams generated within the WTP will meet the waste acceptance criteria or protocols established by the receiving TSD facilities' permits and operating authority. This document does not outline the details of sampling and analyzing each waste stream because each TSD receiving waste may update its waste acceptance criteria and thus alter the required waste analyses.

The following general information related to waste classification applies to solid and liquid secondary waste streams:

- Normally, waste streams will be designated using process knowledge. Acceptable process knowledge includes:
  - Historical analytical data~~.~~
  - Mass balance from a controlled process with a specified output for a specified input~~.~~
  - ~~Material safety~~Safety data sheets~~.~~ (SDS)

  - Analytical data on the waste from a similar process~~.~~
  - For mixed waste, process knowledge could include information from surrogate material~~.~~ (that is, a non-radioactive waste generated from an analogous activity or process)
- The listed waste numbers F001 through F005 will follow the secondary waste if the secondary waste is derived from the waste feed. F039 waste was never placed in the DST system unit, and will not be ~~applied~~designated to secondary waste. If the DST system unit receives F039 waste in the future, ~~then~~ F039 will then be ~~applied~~designated to secondary waste that contacts the DST waste feed.
- Secondary wastes ~~that are~~ not derived from the waste feed~~, such as laboratory~~ (e.g., Lab and maintenance waste~~,~~) will be characterized and designated with the appropriate EPA hazardous waste numbers and Washington State dangerous waste numbers, and managed accordingly.
- If analyses are required for determining waste numbers for a secondary waste, laboratory procedures will be prepared using applicable SW-846 ~~(EPA 1997a)~~ methods~~.~~ (EPA 2014). Analytical procedures will be revised, as appropriate, if SW-846 ~~(EPA 1997a)~~ methods are revised.
- Documentation of the process knowledge or analytical data used to designate the waste numbers will be maintained in the WTP operating record. Documentation is discussed in Section ~~6~~3A.7.0 of this report, and waste tracking is presented in Section ~~7~~3A.8.0.
- Characteristic of ignitability (D001) and reactivity (D003) waste numbers, if applicable, can be removed after testing or the application of process knowledge, as appropriate.

3A.5.~~2.~~1 Secondary Solid Waste Streams

~~Solid waste streams that are designated as dangerous or mixed waste will be transferred to Hanford Site TSDs in accordance with the current *Hanford Site Solid Waste Acceptance Criteria* (HSSWAC) (HNF 2001). The WTP will meet the unit specific waste acceptance criteria for the receiving Hanford Site or other appropriate TSD. Solid wastes that are stored at the WTP will meet the acceptance criteria of the specific WTP storage area.~~
Solid waste will be generated from WTP operations and includes a wide variety of wastes—such as waste derived from routine maintenance activities, nonroutine maintenance activities, and daily operating activities. The following sections describe the various mixed and variable solid waste types to be generated. Refer to the WAP glossary for additional details on the specific waste types.

3A.5.~~2.~~1.1 Solid Waste Designated as Mixed Waste

Solid waste streams that will come into contact with the waste feed during any stage of the treatment processes will be designated as mixed waste by process knowledge. These secondary waste streams are listed in ~~Table B1-6.~~Table 3A-6. EPA hazardous waste numbers and Washington State dangerous waste numbers will be assigned to these mixed waste streams, based on the characterization of the waste feed. Each waste stream discussed below will meet the waste acceptance criteria of the receiving facility. A discussion of each of these mixed waste streams is provided.

Out-of-Service Melters

It is anticipated that melters will require replacement at some point, due to the harsh conditions of the vitrification process. When the end of a melter's operational life is reached, residual molten glass will be removed as immobilized product, as much as is practical. The melter will be allowed to cool and then will be disconnected.

~~The locally shielded melter (LSM) will be a disposal container or overpack, defined as a Resource Conservation and Recovery Act (RCRA 1976) miscellaneous unit, containing the LAW melter. The LSM, including residual glass, will be the final disposal container. After disconnection, the openings will be closed to provide complete containment. The LAW LSM will be transported to a permitted Hanford TSD. Refer to Chapter 4.0 for a more complete description of the LSM.~~

~~A HLW melter that is removed from service and that meets the HSSWAC will be placed into an overpack that will serve as its disposal container. The HLW disposal container is not a LSM. The overpacked HLW melter will be transported to a permitted Hanford Site TSD for disposal.~~

~~An out-of-service HLW melter may not meet the HSSWAC, depending on its radionuclide content. If this should occur, the overpacked HLW melter will be stored at the WTP or another permitted facility until facility closure, at which time it will be dismantled, packaged, and transported to a permitted Hanford Site TSD for disposal.~~

~~The details for the disposal of the LAW LSM and overpacked HLW melters are currently under development.~~

~~HLW~~The LAW melters will be provided to the disposal facilities in a shielded and seal-welded melter package. The melters may require a LDR treatability variance to allow land disposal at the Hanford Site. The Tank Operations Contractor, with the Plateau Remediation Contractor, has been tasked with developing a disposal path for the WTP LAW melters. A determination has yet to be made if the LAW melter will require additional treatment at the disposal facility. Due to the extreme weight of a spent or failed LAW melter, treatment (if needed) would have to be completed at or near the disposal site. If treatment will occur at the disposal facility, the appropriate permit modifications will be required to include this activity.

Current data indicate that the concentration of TRU constituents will cause some HLW melters to be designated as a TRU waste. The LDR treatment standards for the HLW melter are met by the macroencapsulation of the melter in an 8-inch thick welded carbon steel shielded overpack. The Tank Operations Contractor, with the Plateau Remediation Contractor, has been tasked with developing a disposal path for the WTP HLW melters. The HLW melters may require an LDR treatability variance to allow land disposal at the Waste Isolation Pilot Plant (WIPP) or another offsite facility. If future waste characterization data validates that some HLW melters will be TRU waste, permitting and approval for long-term storage of this TRU waste at the Central Waste Complex will then be needed. Facilities to grout, size reduce, and package the melters to meet the WIPP waste acceptance criteria or a yet to be established HLW disposal facility do not exist.

High-Level Waste Glass Residue

The disposal path for HLW glass residue that may be removed from an out-of-service HLW melter will be determined case-by-case. Final disposal will be based on the radionuclide content and dangerous characteristics of the glass residue. It is anticipated that this secondary waste will be classified as remote-handled, mixed low-activity waste. These wastes will be packaged for transportation in shielded transportation casks and treated for disposal at a commercial vendor to meet the LDR.

Melter Components

Melters will be fitted with various ancillary equipment (~~such as~~ e.g., bubbler assemblies, heating elements, and thermocouples) that ~~may~~will require periodic replacement. The ancillary equipment will be removed, designated by process knowledge as mixed waste, and packaged and transferred to an appropriate TSD unit. It is anticipated that LAW melter components will be contact-handled, mixed low-activity waste; the HLW melter components will be remote-handled, mixed low-activity waste. Both these secondary waste streams will be packaged for transportation and treated for disposal at a commercial vendor to meet the LDR.

~~Off-gas~~Offgas Treatment System Components

HEMEs, HEPA filters, and silver mordenite canisters will be components of the ~~off-gas~~offgas treatment system incorporated to remove contaminants from the ~~off-gas~~offgas streams prior to discharge. These components will periodically be replaced to maintain treatment efficiency. They will be designated by process knowledge, packaged, and transferred to an appropriate TSD unit.

Spent Carbon and Catalyst from ~~Off-gas~~Offgas Treatment

Spent carbon and catalyst from ~~off-gas~~offgas treatment will periodically be replaced to maintain treatment efficiency. These materials will be designated by process knowledge and managed as mixed waste. They will be removed from their respective equipment, packaged, and transferred to an appropriate TSD unit.

Spent Ion Exchange Resins

Ion exchange resins used for cesium removal will periodically be replaced to maintain treatment efficiency. These resins will be designated by process knowledge and managed as mixed waste. They will be eluted, removed from their respective columns, dried and packaged in high-integrity containers, and finally transferred to an appropriate TSD unit.

Spent Ultrafilters

Ultrafilters may be periodically replaced to maintain treatment efficiency. They will be designated as mixed waste by process knowledge, packaged, and transferred to an appropriate TSD unit.

Out-of-Service Equipment

Ancillary equipment~~, such as~~ (e.g., pumps, valves, piping, motors, and electrical equipment~~, that is)~~ no longer fit for use, will be removed from service and designated as out-of-service equipment. Out-of-service equipment that contacted the waste feed ~~or secondary waste liquid streams~~ will be designated by process knowledge, packaged, and transferred to an appropriate TSD~~.~~ unit.

Entrained Solids

Entrained solids will be generated by pretreating the LAW feed ~~using~~via ultrafiltration. The separated solids will be washed and again concentrated ~~using~~via ultrafiltration. The entrained solids will either be incorporated into the ~~HLW feed~~IHLW or the ILAW or returned to the DST system unit in the form of a slurry via pipeline.

3A.5.2.1.2 Variable Solid Waste Streams

The waste streams listed in Table B1-7Table 3A-7 can be radioactive waste, dangerous waste, or mixed waste, depending on the source of the waste and whether it had contact with the waste feed. The EPA hazardous waste numbers and Washington State dangerous waste numbers will be assigned to these waste streams, based on the designation of the waste by process knowledge. In addition to the waste streams listed in Table B1-7,Table 3A-7, raw process materials and chemicals will be brought onto the WTP site. Some of these substances may subsequently become waste and will require characterization for proper waste management. The material safety data sheet (MSDS)The SDS provides the information necessary to properly characterize and designate a substance when it becomes a waste. Vendors will be required to provide MSDSSDS for substances that will be brought onto the WTP site, and a MSDSan SDS file will be maintained by the WTP. Examples of these types of substances are process and laboratory chemicals, lubricants such as (e.g., oils and greases,), and maintenance products, such as (e.g., paints, solvents, and adhesives.).

Subcontractors to the WTP will be required to have an MSDSSDS for the substances that they bring onto the WTP site. Subcontractors will also be required to remove the residuals of any substance that they bring onto the WTP site, including wastes generated such as (e.g., wipes, paintbrushes, and personal protective equipment. [PPE]). Subcontractors may make arrangements with another waste management organization to manage the generated wastes.

Laboratory Waste

Liquid laboratory waste collected in the hot cell drain and lab area sink drain collection vessels will be transferred to the pretreatment facility for recycle. Non-wastewater laboratory waste derived from the waste feed will be designated as mixed waste by process knowledge, packaged, and transferred to an appropriate TSD unit. Other non-wastewater laboratory wastes, such as (e.g., off-specification laboratory chemicals, and spent or unused simulant) will be designated by process knowledge and managed accordingly. These wastes will be packaged and treated as necessary and disposed of at an appropriate TSD unit.

Personal Protective Equipment

Personnel performing certain tasks such as facility maintenance, treatment process operations, and waste packaging activities, may wear PPE.personal protective equipment. Used personal protective equipment PPE may be returned to the vendor for cleaning and refurbishment. Used personal protective equipmentPPE that cannot be recycled to the vendor and has had contact with waste feed or other sources of radiological contamination will be designated as radioactive or mixed waste by process knowledge, packaged, and transferred to an appropriate TSD. Personal protective equipment waste that is not radioactive but is unit. The PPE nonradioactive waste designated as dangerous waste by process knowledge will be packaged as necessary and disposed of at an appropriate TSD unit.

Maintenance Waste

Maintenance wastes such as (e.g., paints, lubricants, cleaning solvents, adhesives, and off-specification chemicals) will be generated at the WTP. Maintenance wastes derived from thewaste that comes in direct contact with waste feed will be designated as mixed waste. Waste contaminated by indirect contact will be designated based on process knowledge, packaged as radioactive waste or mixed waste as appropriate, and transferred to an appropriate TSD unit. Those not derived from the waste feed and

designated as dangerous waste by process knowledge will be packaged ~~as necessary~~ and disposed of at an appropriate TSD unit.

3A.5~~.2~~.2 Liquid Waste Streams ~~[C-2c]~~

The dangerous and mixed liquid waste streams generated at the WTP that cannot be incorporated back into the treatment process (recycled) will be managed in accordance with the ~~*Hanford Site Liquid Waste Acceptance Criteria* (HSLWAC) (WMFS 1998~~LERF/ETF WAC (CHPRC 2012). The LERF or the ETF, or both, will receive hazardous aqueous waste generated at WTP. The waste will meet the acceptance criteria as outlined in the ~~HSLWAC~~LERF/ETF WAC. The LERF and ETF allow process knowledge to be used in lieu of some analyses in instances where process knowledge is adequate, and a LERF or ETF representative will work with a WTP representative to identify the waste acceptance criteria and analyses appropriate for liquid waste characterization.

~~The liquid~~Aqueous waste streams listed in ~~Table B1-8~~Table 3A-8 will be collected in an effluent collection tank. Should sampling be required, the sample will be drawn from a location identified in ~~Figure B1~~Figure 4A-1 of Appendix 4A as ~~S3~~S2. Samples will be taken from the effluent collection tank by a computer-controlled ~~auto-sampling~~autosampling system~~. Auto-sampling~~ at the PT Facility or manually sampled. Autosampling of waste streams is described in Section 7.2.1 of ~~the American Society for Testing and Materials (~~ASTM~~) Designation~~ D6232-98, *Standard Guide for Selection of Sampling Equipment for Waste and Contaminated Media Data Collection Activities* ~~(ASTM 1998).~~ The effluent collection tank will be stirred during sample collection to provide representative samples.

When the WTP is configured for the DFLAW configuration, samples of condensate and liquid effluent may be taken from the appropriate EMF vessel or the effluent transfer pipeline after additions for corrosion control, and analyzed to verify the effluent meets the LERF/ETF WAC. Additional sampling and analysis of EMF effluent will be performed in the event of a process upset, change in effluent source, compliance purposes, data loss, or as agreed to by WTP and LERF or ETF.

Disposable sampling equipment will eliminate the need for equipment decontamination after use. If the use of disposable equipment is not practical, the sampling equipment will be decontaminated before and following each sample event.

A discussion of each aqueous waste stream is presented below.

Aqueous Waste from Processes

~~Table B1-8~~Table 3A-8 lists the aqueous waste streams that will be generated by the WTP from processing the DST waste feed. The analytical laboratory will also generate aqueous waste. These waste streams will contain both radioactive and dangerous waste components and will be similar to the process condensate stream described in ~~the *Hanford Facility*~~ DOE/RL-90-42, *242-A Evaporator Dangerous Waste Permit Application*~~, 242-A Evaporator (DOE-RL 2005). These~~ (DOE-RL 1997). When WTP is configured for waste feed to the PT Facility, these aqueous waste streams will be piped to the effluent collection tank prior to transfer to the LERF~~/~~ or ETF by underground pipeline for treatment.

Plant Wastewater

Wastewater will be generated primarily from decontamination and wash-down activities in the WTP. The wastewater will be designated as mixed waste by process knowledge, since it will contain dilute waste feed constituents. ~~Wastewater~~When WTP is configured for waste feed to the PT Facility, wastewater

will also be piped to the effluent collection tank prior to transfer to the LERF/ or ETF by underground pipeline for treatment.

EMF Effluents

Evaporator condensate from the EMF is transferred to the LERF or ETF by underground pipeline for treatment. Evaporator concentrate is typically recycled back to the LAW Facility or a pretreat/conditioning facility operated by the Tank Farms Contractor for eventual incorporation into ILAW, but can be returned to the DST system unit for storage in the unlikely event that the waste cannot be recycled. An alternate contingency, the effluent can be transferred by tanker truck to the appropriate disposal facility.

3A.5.3 Treatment, Storage, or Disposal Unit Waste Acceptance Criteria

Solid waste streams designated as dangerous or mixed waste will be transferred to Hanford Site TSD units in accordance with the current *Hanford Site Solid Waste Acceptance Criteria* (CHPRC 2011). The WTP will meet the unit-specific waste acceptance criteria for the receiving TSD unit. Solid wastes stored at the WTP will meet the acceptance criteria of the specific WTP storage area.

3A.6.0 LAND DISPOSAL RESTRICTIONS EVALUATION FOR IMMOBILIZED WASTE

This section describes the approach for addressing the LDR program requirements applicable to the land disposal of ILAW and IHLW.

The LDRs are codified in WAC 173-303-140, *Dangerous Waste Regulations – Land Disposal Restrictions*, which incorporates 40 CFR 268, *Land Disposal Restrictions*, by reference. In 40 CFR 268.40, *Land Disposal Restrictions – Applicability of Treatment Standards*, the treatment standards for land disposal of a dangerous waste are identified as follows:

A prohibited waste identified in the table "Treatment Standards for Hazardous Wastes" may be land disposed only if it meets the requirements found in the table. For each waste, the table identifies one of three types of treatment standard requirements:

> (1) All hazardous constituents in the waste or in the treatment residue must be at or below the values found in the table for that waste ("total waste standards"); or
>
> (2) The hazardous constituents in the extract of the waste or in the extract of the treatment residue must be at or below the values found in the table ("waste extract standards"); or
>
> (3) The waste must be treated using the technology specified in the table ("technology standard"), which are described in detail in § 268.42, Table 1 – Technology Codes and Description of Technology-Based Standards.

The total waste standards and waste extract standards require repeated sampling and analysis of the waste to demonstrate that the dangerous constituents in the waste are at or below the values found in the table. These standards are appropriate for a limited dangerous waste stream, but are not a good choice for a mixed waste stream of extended duration because of repeated human exposure during sampling and analysis.

Table 1 in 40 CFR 268.42, *Land Disposal Restrictions – Treatment Standards Expressed as Specified Technologies*, includes the technology-based standard "HLVIT" (high-level vitrification). At the request of DOE, the HLVIT treatment technology was promulgated by the EPA to treat the tank waste at the Savannah River Site (refer to *Land Disposal Restrictions for Third Third Scheduled Wastes; Rule* [EPA 1990]). According to the table in 40 CFR 268.40 regarding treatment standards for hazardous wastes, HLVIT is the technology for the treatment of the following dangerous waste numbers from radioactive high-level wastes generated during the reprocessing of fuel rods:

D002 Corrosivity (pH)
D004 Arsenic
D005 Barium
D006 Cadmium
D007 Chromium (total)
D008 Lead
D009 Mercury
D010 Selenium
D011 Silver

Similar to the treatment of the Savannah River Site tank waste, the treatment of the Hanford tank waste will require many years of WTP operation. Rather than repeated sampling and analysis of the waste to demonstrate LDR using the total waste standard or the waste extract standard, it would be appropriate to treat the Hanford tank waste to a specific treatment standard (e.g., the HLVIT technology-based standard described above for the Savannah River Site tank waste). Consequently, the WTP is preparing a petition to the EPA and Ecology to establish a new treatment standard that will be specific to the Hanford tank waste. The new treatment standard would specify vitrification as the land disposal treatment standard for tank waste for the characteristic and listed waste numbers applicable to the Hanford tank waste.

As required by 40 CFR 268.44, the petition will be submitted in accordance with the procedures specified in 40 CFR 260.20, *Hazardous Waste Management System – General*. Report RPT-W375LV-EN00002, *Approach to Immobilized Hanford Tank Waste Land Disposal Restrictions Compliance*, describes the petition process. The negotiated petition will be published in the Federal Register for public comment. After successful resolution of public comments, the EPA would promulgate a final rule establishing the treatment standard. The Hanford tank waste would then meet LDR through treatment by the promulgated treatment standard.

~~6~~3A.7.0 WASTE TRANSFER DOCUMENTATION SYSTEM ~~[C-3]~~

The WTP is part of the Hanford Site ~~facility~~ because it will operate under the same EPA ~~-~~ identification (ID) number as the other Hanford Site facilities. The WTP will prepare transportation documentation for the transfer of dangerous or mixed waste to a Hanford TSD unit according to the requirements of Condition ~~-~~ II.~~N~~Q of the Hanford Facility RCRA Permit – Dangerous Waste ~~Permit~~Portion (Ecology ~~1994~~ 2007). Condition II.~~N.2.d~~Q.1 exempts waste that will be transported by rail or pipeline unless required by unit-specific conditions. This exemption will apply to waste feed ~~that is~~ transferred to and from the WTP by underground pipeline, and to effluent transferred to the LERF~~/~~, ETF, a LAW pretreat/conditioning facility operated by the Tank Farms Contractor, or Tank Farms via underground pipeline.

Waste transfer documentation and supporting process knowledge will be considered QA records and managed in accordance with the requirements for document control, as outlined in the ~~QAPjP~~QAPP.

This documentation will specify the identity of the receiver and confirm that the receiver accepted the waste. WTP ~~staff~~personnel and the waste receiver's acceptance personnel will date and sign the waste transfer papers. Electronic waste transfer documentation may be used, as appropriate.

Solid and liquid waste transfers and LDR notifications are discussed in the following sections.

~~6~~3A.7.1 Solid Waste Transfer

The WTP, as a waste generator, will provide documentation with each ~~shipment~~container transferred to the Tank Operations Contractor to support waste designation and waste shipping of regulated solid waste to a Hanford Site TSD unit in accordance with the current ~~HSSWAC (HNF 2001).~~*Hanford Site Solid Waste Acceptance Criteria* (CHPRC 2011). Regulated solid waste transferred from the WTP to the Tank Operations Contractor for treatment and final disposal at a Hanford Site TSD unit will meet the unit-specific waste acceptance criteria for the receiving TSD unit. Regulated waste shipped to an offsite TSD unit will be accompanied by a manifest, according to ~~WAC 173-303-180.~~WAC 173-303-180, *Dangerous Waste Regulations – Manifest*.

~~6~~3A.7.2 Liquid Waste Transfer

Aqueous waste transfers from the WTP to ~~the 200 Area~~ LERF~~/~~ or ETF will comply with the current ~~HSLWAC (WMFS 1998).~~ LERF/ETF WAC (CHPRC 2012). The WTP will perform online monitoring of the effluent flow rate, effluent radiation, pH, and conductivity, and the data will be transmitted to the LERF Instrument Building. The real-time data will be transmitted over a dedicated line. Stop-transfer control and leak detection circuits will be integrated with the effluent transfer system.

Aqueous waste transfers from the WTP to the Tank Farms will meet the Tank Farms' waste acceptance criteria (under development).

A waste profile sheet will accompany aqueous waste transfers. As waste stream disposition requirements are identified, individual waste profiles will be developed in a joint effort between the WTP, Tank Operations Contractor, and the DOE.

~~6~~3A.7.3 Land Disposal Restrictions Notification and Certification

The WTP will provide LDR notification and certification of WTP ~~-~~shipped waste that ~~contain~~contains LDR constituents above the treatment standards listed in 40 CFR 268.40. The information will be included with transfer documents to the receiving TSD facility for solid waste and liquid waste transfers. The receiving TSD will generate a new LDR notification and certification subsequent to any additional treatment performed, prior to final disposal.

~~7~~3A.8.0 TRACKING SYSTEM ~~[C-4]~~

The ~~plant information network~~ Plant Information Network (PIN) will be a manufacturing execution system ~~is~~ designed to collect and maintain information~~. The PIN enables~~ enabling the optimization of the WTP ~~operational and support~~ The recommended sample size for anions analysis is 20 mL of liquid and 20 g of solid.

~~. In addition, it provides data on the glass~~ from order launch to finished product~~, secondary wastes, and monitoring activities.~~. The PIN consists of software applications designed to meet specific

requirements and functions. ~~An overview of the network software systems is provided in Figure B1-2.~~

The PIN will consist of the following systems:

- ~~Computerized~~ Maintenance ~~Management System (CMMS).~~management system
- Plant ~~Data Warehouse~~data warehouse and ~~Reporting System~~ reporting system (PDWRS~~).~~)
- Laboratory ~~Information Management System (LIJ).~~information management system (LIMS)
- ~~Waste tracking and inventory system (to be developed).~~
- Solid Waste Tracking Database (SWTD)

The PIN will interface with the ~~integrated control network~~ Integrated Control Network (ICN). The ICN will consist of the process control system, mechanical handling control system, and the ~~auto-sampling~~autosampling control system.

These systems will be discussed in the following sections as they relate to waste tracking.

~~7~~3A.8.1 Inventory and Batch Tracking

The ~~waste tracking~~PDWRS and ~~inventory system serves~~LIMS serve as the main repository for the relevant information pertinent to a given waste batch. Data is collected for each sequence or step throughout the processing history of a given batch of waste, from receipt of raw feed to disposition of the finished products, including secondary waste. At the end of a batch cycle, the data applicable to that particular batch will be catalogued to facilitate historical recording and reporting.

The ~~waste tracking~~PDWRS and ~~inventory system~~LIMS will also record the inventory of glass product containers, including the data generated for each container of vitrified waste~~,~~ and ~~including~~ the final QA checks. Each glass product container will bear a unique ~~identification~~ID number to facilitate tracking.

~~7~~3A.8.2 Sample Tracking

Sampling activities will be started, monitored, and controlled ~~through~~by the ~~plant~~ ICN, with key sequence durations and operations logged~~.~~ into the PDWRS and LIMS directly from the ICN. Sampling operations will be requested by plant operators or laboratory personnel using the ICN. These requests will be time and date stamped, as will the actual sampling operation and the associated sample handling and laboratory activities. Sample requests and operations will be channeled through the ICN, which will operate in a supervisory capacity and will communicate the necessary information to the PDWRS and LIMS.

The LIMS will be an integral feature of the PIN. Workstations will be located within the laboratory and the plant control rooms. The LIMS will record the required ~~quality control~~QC checks to ~~assure~~ensure correct sample preparation and selection of analyses ~~will be recorded in the LIMS.~~, and controlled checking and approval of results.

Sample containers received in the laboratory preparation area will be identified by their ~~identification (~~ID~~)~~ label. The ID label ~~correlates the sample container with~~provides details of the sample source and, therefore, ~~identifies~~specifies the required preparation and analysis techniques. The ID will be registered

at the locations where manual intervention is required~~, such as~~ (e.g., manual samplers~~.~~). The results of calibration checks on equipment and analyzers will be recorded.

Analytical results will be compiled by the LIMS and held, pending checking and approval by laboratory staff, before being formally recorded within the ~~waste tracking~~PDWRS and ~~inventory system. Process control sample results~~LIMS. Results that affect the progression of the main plant process will be communicated to appropriate plant personnel where required. WTP samples that come under the exclusion provided in WAC 173-303-071(3)(l), *Dangerous Waste Regulations – Excluded Categories of Waste*, may not be tracked.

Samples transferred to an analytical laboratory external to the WTP will be tracked in ~~the~~a LIMS. The LIMS will be capable of accurately tracking samples through the laboratory, and accurately recording analytical results and ~~quality control~~QC data. Section~~-~~ 3A.3~~.5~~.3 discusses the evaluation of external analytical laboratories.

~~7~~3A.8.3 Secondary Waste Stream Tracking

Secondary waste streams will be tracked separate from the primary waste/product streams within the ~~waste tracking and inventory system~~WTP. Secondary waste, once generated, will be placed in containers with unique ID numbers and tracked in the Solid Waste Tracking Database (SWTD) in a manner similar to that of primary waste streams. ~~Secondary waste streams will be managed by using assigned, unique ID numbers.~~ Corresponding histories and data collection triggers will gather process and ~~status information~~characterization data during the ~~processing~~generation and packaging of secondary waste in order to ~~satisfy tracking of waste~~ support designation, treatment, and disposal ~~records.~~of the waste. The SWTD will provide cradle-to-grave tracking and record of all secondary waste generated at the WTP. Shipments of overpacks will be labeled and tracked as part of the inventory control function of the ~~waste tracking and inventory system.~~ SWTD.

Maintenance, decommissioning, or disposal activities may generate consumables, including such items as equipment, hardware, ~~personal protective equipment~~PPE, and materials used in the normal operation of the facility. Consumables ~~that are~~ designated as dangerous ~~waste~~ will be tracked by the ~~waste tracking and inventory~~maintenance management system, with appropriate fields denoting the hazardous classification of the disposed parts and materials, and cross-linked to disposal records. Waste being accumulated in satellite accumulation areas under the provisions of ~~WAC 173-303-200 will also be tracked~~WAC 173-303-200, *Dangerous Waste Regulations – Accumulating Dangerous Waste On-Site*, may not be tracked until it has been accepted into a permitted portion of the WTP.

~~8~~3A.9.0 RECORD KEEPING

Records generated for environmental compliance will be legible, identifiable, and retrievable, and will be protected against damage, deterioration, or loss. Requirements and responsibilities for record transmission, distribution, retention, maintenance, and disposal will be established and documented. The requirements contained in WAC 173-303-380(a~~), (~~, b~~),~~ and ~~(~~c~~) of WAC 173-303-380 "~~), *Dangerous Waste Regulations – Facility Recordkeeping*~~",~~ are addressed in this WAP and will be managed through the waste tracking system record~~-~~keeping policies. Additional requirements listed under ~~WAC 173-303-380~~WAC 173-303-380 are addressed in the ~~QAPjP~~QAPP. Records generated to support activities described in ~~the~~this WAP will be considered QA records. These may be in electronic or

~~hardcopy~~hard copy format, and will be managed according to the requirements outlined in the ~~QAPjP~~QAPP.

The following documents that support this WAP are considered QA records:

- Sample information provided by the ~~DST system unit~~Tank Operations Contractor, including constituents of concern from sampling activities, laboratory analysis results, waste certifications, and shipping and transfer papers~~.~~
- ~~Verification analytical data.~~
- Documentation used for any discrepancy resolution and ~~non-conformance~~nonconformance action~~.~~
- Confirmation volume measurement data, including any discrepancy resolution~~.~~
- Documentation used for LDR evaluation~~.~~
- Sampling and analytical data developed for meeting the waste acceptance criteria of receiving facilities~~.~~
- Calibration data from analytical equipment~~.~~
- Shipment and waste transfer documentation, including waste profile sheets~~,~~ and LDR information forms~~.~~

~~9~~3A.10.0 REFERENCES

~~9~~3A.10.1 Project Documents

~~*River Protection Project – Waste Treatment and Immobilization Plant Dangerous Waste Permit Application*, as amended.~~

~~*River Protection Project – Waste Treatment Plant*~~24590-WTP-QAM-QA-06-001, *Quality Assurance Manual*.

24590-WTP-RPT-ENV-01-001, *RCRA Subpart AA Applicability*.

24590-WTP-RPT-ENV-01-002, *Quality Assurance Project Plan for the Waste Analysis Plan*~~, Rev. 0.~~ (QAPP).

24590-WTP-RPT-MGT-04-001, ~~Rev. 0, *Regulatory*~~ *Regulatory Data Quality Objectives Optimization Report* (RDQO Optimization Report).

CCN 233666, email, A Arakali (URS) to P Benson (URS), *Sample Volume Required for Analyses of Feed Samples - WAC DQO*. May 18, 2011.

RPT-W375LV-EN00002, ~~as amended.~~ *Approach to Immobilized Hanford Tank Waste Land Disposal Restrictions Compliance*.

~~9~~3A.10.2 Codes and Standards

~~10 CFR 72.3.~~10 CFR 60.2. *Disposal of High-Level Radioactive Wastes in Geologic Repositories – Definitions*. Code of Federal Regulations.

10 CFR 72.3. *Licensing Requirements for the Independent Storage of Spent Nuclear Fuel ~~and~~, High-Level Radioactive Waste, ~~Code of Federal Regulations, as amended.~~*

~~40 CFR 260. *General,*~~*and Reactor-Related Greater than Class C Waste – Definitions*. Code of Federal Regulations~~, as amended~~.

~~40 CFR 261. *Identification and Listing,*~~15 USC 2601 et seq. *Toxic Substances Control Act of 1976*. United States Code.

40 CFR 260.20. *Hazardous Waste Management System*. Code of Federal Regulations~~, as amended~~.

~~40 CFR 264.~~40 CFR 264, Appendix V. *Standards for Owners and Operators of Hazardous Waste Treatment, Storage, and Disposal Facilities – Examples of Potentially Incompatible Waste*. Code of Federal Regulations.

40 CFR 264, Subpart AA. *Standards for Owners and Operators of Hazardous Waste Treatment, Storage, and Disposal Facilities – Air Emission Standards for Process Vents*. Code of Federal Regulations.

40 CFR 264, Subpart BB. *Standards for Owners and Operators of Hazardous Waste Treatment, Storage, and Disposal Facilities~~,~~ – Air Emission Standards for Equipment Leaks*. Code of Federal Regulations~~, as amended~~.

~~40 CFR 268.~~40 CFR 264, Subpart CC. *Standards for Owners and Operators of Hazardous Waste Treatment, Storage, and Disposal Facilities – Air Emission Standards for Tanks, Surface Impoundments, and Containers*. Code of Federal Regulations.

40 CFR 268. *Land Disposal Restrictions~~,~~*. Code of Federal Regulations~~, as amended~~.

~~40 CFR 761.61. *PCB Remediation Waste,* Code~~40 CFR 268.40. *Land Disposal Restrictions – Applicability of* ~~Federal Regulations, as amended. 49 CFR 172.101. *Hazardous Materials Table,*~~*Treatment Standards*. Code of Federal Regulations~~, as amended~~.

~~49 CFR 173.~~40 CFR 268.42. *Land Disposal Restrictions – Treatment Standards Expressed as Specified Technologies*. Code of Federal Regulations.

40 CFR 268.44. *Land Disposal Restrictions – Variance from a Treatment Standard*. Code of Federal Regulations.

40 CFR 761.61. *Polychlorinated Biphenyls (PCBs) Manufacturing, Processing, Distribution in Commerce, and Use Prohibitions – PCB Remediation Waste*. Code of Federal Regulations.

42 USC 7401 et seq. *Clean Air Act of 1990*. United States Code.

49 CFR 173.115. *Shippers – General Requirements for Shipments and Packagings – Class 2, Divisions 2.1, 2.2, and 2.3 – Definitions*. Code of Federal Regulations.

49 CFR 173.127. *Shippers – General Requirements for Shipments and ~~Packages,~~Packagings – Class 5, Division 5.1 – Definition and Assignment of Packing Groups*. Code of Federal Regulations~~, as amended.~~.

ASTM. 1990. *Preparation of Radioactive Mixed Waste Samples*49 CFR 173.128. *Shippers – General Requirements* for *Measurement of RCRA Organic Compounds*, Tomkins BA*Shipments* and Caton JE, Waste Testing*Packagings – Class 5, Division 5.2 – Definitions* and *Types*. Code of Federal Regulations.

49 CFR 173.50. *Shippers – General Requirements for Shipments and Packagings – Class 1 – Definitions*. Code of Federal Regulations.

49 CFR 173.54. *Shippers – General Requirements for Shipments and Packagings – Forbidden Explosives*. Code of Federal Regulations.

ASME NQA-1-2000. *Quality Assurance*, Second Volume, *Requirements for Nuclear Facility Applications*. The American Society of Mechanical Engineers, New York, NY.

ASTM D93. *Standard Test Methods for Flash Point by Pensky-Martens Closed Cup Tester*. American Society for Testing and Materials, West Conshohocken, PA.

ASTM STP 1062, Friedman D, Editor. D3278. *Standard Test Methods for Flash Point of Liquids by Small Scale Closed-Cup Apparatus*. American Society for Testing and Materials, Philadelphia, PennsylvaniaWest Conshohocken, PA.

ASTM. 1998. D5058-90. *Standard Practices for Compatibility of Screening Analysis of Waste*. American Society for Testing and Materials, West Conshohocken, PA.

ASTM D6232. *Standard Guide for Selection of Sampling Equiment**Equipment* for Waste and Contaminated Media Data Collection Activities, Designation D6232-98, June 1998.. American Society for Testing and Materials, West Conshohocken, Pennsylvania PA.

ASTM. 2001. *Standard Test Methods for Compatibility of Screening Analysis of Waste*, Method D5058-90. American Society for Testing and Materials, West Conshohocken, Pennsylvania.

CAA.DOE 5820.2A. 1988. *Radioactive Waste Management*. US Department of Energy, Washington, DC.

EPA. 1990. *Clean Air Act of 1990*, 42 USC, Section 7401. US Congress, Washington D.C.

EPA. 1997a. *Test Methods for Evaluating Solid Waste, Physical Chemical Methods*, SW-846, *Land Disposal Restrictions for Third* Edition, (as amended by Updates I, II, IIA, IIB, and III).*Third Scheduled Wastes; Rule*, Federal Register, Vol. 55, No. 106, pp 22,520 through 22,629. US Environmental Protection Agency, Washington, D.C. DC.

EPA. 1997. 1997b. *Methods and Guidance for the Analysis of Water*, *(Includes EPA Series 500, 600, 1600 Methods) Single User* (on CD-ROM), EPA-/821-C-97-001, as amended.. US Environmental Protection Agency, Office of Science and Technology, Washington, D.CDC.

EPA. 2014. *Test Methods for Evaluating Solid Waste: Physical/Chemical Methods*, SW-846, Update V, as amended. US Environmental Protection Agency, Washington, DC. https://www.epa.gov/hw-sw846/sw-846-compendium (accessed May 2, 2016).

FRL-5903-2. 1997. ~~RCRA. 1976. *Resource Conservation and Recovery Act of 1976*, 42 USC 6901. US Congress, Washington D.C.~~

~~TSCA. 1976. *Toxic Substances Control Act of 1976*, 15 USC 2601. US Congress, Washington D.C.~~

~~WAC 173-303.~~ *Performance Based Measurement System*, 62 Federal Register 52098. US Environmental Protection Agency, Washington, DC.

RCW 70.94 et seq. *Washington Clean Air Act*. Revised Code of Washington. Olympia, WA.

WAC 173-303. *Dangerous Waste Regulations*~~,~~. Washington Administrative Code~~, as amended~~. Olympia, WA.

~~WCAA. 1967.~~WAC 173-303-071. *Dangerous Waste Regulations – Excluded Categories of Waste*. Washington ~~*Clean Air Act of 1967*, Revised~~Administrative Code ~~of~~. Olympia, WA.

WAC 173-303-090. *Dangerous Waste Regulations – Dangerous Waste Characteristics*. Washington~~, as amended~~ Administrative Code. Olympia, WA.

~~9~~WAC 173-303-110. *Dangerous Waste Regulations – Sampling, Testing Methods, and Analytes*. Washington Administrative Code. Olympia, WA.

WAC 173-303-140. *Dangerous Waste Regulations – Land Disposal Restrictions*. Washington Administrative Code. Olympia, WA.

WAC 173-303-180. *Dangerous Waste Regulations – Manifest*. Washington Administrative Code. Olympia, WA.

WAC 173-303-200. *Dangerous Waste Regulations – Accumulating Dangerous Waste On-Site*. Washington Administrative Code. Olympia, WA.

WAC 173-303-300. *Dangerous Waste Regulations – General Waste Analysis*. Washington Administrative Code. Olympia, WA.

WAC 173-303-380. *Dangerous Waste Regulations – Facility Recordkeeping*. Washington Administrative Code. Olympia, WA.

WAC 173-303-395. *Dangerous Waste Regulations – Other General Requirements*. Washington Administrative code. Olympia, WA.

WAC 173-303-690. *Dangerous Waste Regulations – Air Emission Standards for Process Vents*. Washington Administrative Code. Olympia, WA.

WAC 173-303-691. *Dangerous Waste Regulations – Air Emission Standards for Equipment Leaks*. Washington Administrative Code. Olympia, WA.

WAC 173-303-692. *Dangerous Waste Regulations – Air Emission Standards for Tanks, Surface Impoundments, and Containers*. Washington Administrative Code. Olympia, WA.

WAC 173-303-806. *Dangerous Waste Regulations – Final Facility Permits*. Washington Administrative Code. Olympia, WA.

3A.10.3 Other Documents

~~Bernero RM. 1993. Letter to Lytle J, Deputy Assistant Secretary~~APHA. 1992. *Standard Methods for the Examination of Water and Wastewater*, 18th Edition. American Public Health Association, Washington, DC. (Standard Method 4500-NH_3-F, *Nitrogen [Ammonia]*.)

CH2M Hill. 2000. *Organic Solvent Topical Report*, HNF-4240, Rev 1. CH2M Hill Hanford Group, Inc., Richland, WA.

CHPRC. 2011. *Hanford Site Solid Waste ~~Operations,~~ Acceptance Criteria*, HNF-EP-0063. CH2M Hill Plateau Remediation Company, Richland, WA.

CHPRC. 2012. *Liquid Waste Processing Facilities Waste Acceptance Criteria* (LERF/ETF Waste Acceptance Criteria), HNF-3172, Rev 6. CH2M Hill Plateau Remediation Company, Richland, WA.

DOE. 2004. *Nuclear Waste Policy Act*, DOE M 435.1-1, as amended (adapted from DOE 5820.2A). US Department of Energy, Office of Civilian Radioactive Waste Management, ~~Environmental Restoration and Waste Management, US Department of Energy, Washington D.C., from Nuclear Regulatory Commission,~~ Washington, DC.

DOE-ORP. 2000. ~~D.C., 2 March 1993.~~ Memorandum from RT French (ORP) to CL Huntoon (DOE), *Closure of the Organic Solvent Safety Issue and Removal of the Organic Solvent Tanks from the Watchlist*, 00-SHD-066, dated July 14, 2000. US Department of Energy, ~~Washington D.C~~Office of River Protection, Richland, WA.

~~Blankenship TD. 1990. Internal Memo from TD Blankenship to SM Price, *Double-Shell Tank Waste Designation*, 82331-90-313. August 1990. Westinghouse Hanford Company, Richland, Washington.~~

DOE-RL. 1997. ~~2009. *Double-Shell Tank System 242-A Evaporator*~~ *Dangerous Waste Permit Application*, DOE/RL-90-~~39, as amended. October 1996. US Department of Energy, Richland Operations Office, Richland, Washington.~~

~~DOE-RL. 2005. *Hanford Facility Dangerous Waste Permit Application, 242-A Evaporator,* DOE/RL-90-~~42~~, as amended. July 2005.~~ US Department of Energy, Richland Operations Office, Richland, ~~Washington~~WA.

DOE-RL. ~~1998.~~ 2013. *Hanford Facility Dangerous Waste Permit Application, General Information Portion*, DOE/RL-91-28, Rev 5. US Department of Energy, Richland Operations Office, Richland, WA.

DOE-RL. 1999. ~~as amended. May 1998. US~~ *Tank Waste Remediation System Final Safety Analysis Report*, HNF-SD-WM-SAR-067. US Department of Energy, Richland Operations Office, Richland, WA.

Ecology, EPA, and DOE. 2000. *Framework Agreement for Management of Polychlorinated Biphenyls (PCBs) in Hanford Tank Waste*. Washington State Department of Ecology, Olympia, WA; US Department of Energy, Office of River Protection, Richland, WA; US Environmental Protection

Agency, Washington, DC; US Department of Energy, Richland Operations Office, Richland, Washington WA.

Ecology, EPA, and DOE RL. 2011. *Hanford Federal Facility Agreement and Consent Order*, 89-10 (Tri-Party Agreement), 1999. *Tank Waste Remediation System Final Safety Analysis Report*, HNF-SD-WM-SAR-067, as amended. USWashington State Department of Energy, Richland, Washington.

DOE-RL 2000. Memorandum from Richard T. French, Manager, Office of River Protection, US Department of Energy, to Carolyn L Huntoon, Assistant Secretary for Ecology, Olympia, WA; US Environmental Management, US Department of EnergyProtection Agency, Washington, DC, *Closure of the Organic Solvent Safety Issue and Removal of the Organic Solvent Tanks from the Watchlist*, 00-SHD-066. July 14, 2000; and US Department of Energy, Washington, DC.

Ecology. 1994.2007. WA7890008967. *Dangerous Waste Portion of the Resource Conservation and Recovery Act Permit for the Treatment, Storage, and Disposal of Dangerous Waste at the* (Hanford Facility, WA7890008967. RCRA Permit – Dangerous Waste Portion). Washington State Department of Ecology, Olympia, Washington WA.

Ecology, EPA, and DOE. 1996. *Hanford Federal Facility Agreement and Consent Order*, (Tri-Party Agreement), 2 vols., 2009. *DST System / 204-AR Waste Unloading Station – Dangerous Waste Permit Application, Part A Form*, as amended. Washington State Department of Ecology, Olympia, Washington, WA.

Ecology. 2014. *Hanford Air Operating Permit 00-05-006 Renewal 2 - Revision A* . Washington State Department of Ecology, Olympia, WA.

EPA. 1989. *Methods for Chemical Analysis of Water and Wastes*, EPA/600/4-79-020. US Environmental Protection Agency, Washington D.C., and US Department of Energy, Washington D.C., DC. (EPA Method 350.3, *Nitrogen, Ammonia [Potentiometric, Ion Selective Electrode]*.)

EPA. 1998. Memorandum from D. Busssard (HWID) and B. Johnson (EMRAD) to D. Love, (NEIC), *Withdrawal of Cyanide and Sulfide Reactivity Guidance*, April 21dated March 25, 1998. US Environmental Protection Agency, Washington, D.CDC.

Lockheed Martin. 1999. *Tank Waste Information Network System (TWINS)*, November 2000. Lockheed Martin Hanford Corporation, Richland, WA. http://twins.pnl.gov:8001/data/data.asp (accessed November 2000)

NRC. 1993. Letter from RM Bernero (NRC Office of Nuclear Material Safety and Safeguards) to J Lytle (DOE Office of Waste Management), dated 2 March 1993. US Nuclear Regulatory Commission, Washington, DC.

NRC. 1997. Letter from CJ Paperiello (NRC) to J Kinzer (DOE), *Classification of Hanford Low-Activity Tank Waste Fraction*, dated June 9, 1997. US Nuclear Regulatory Commission, Washington, DC.

PNL. 1994. Fitzsimmons T, Boston H, Findley C, and Klein K. 2000. *Framework Agreement for Management of Polychlorinated Biphenyls (PCBs) in Hanford Tank Waste*, August 31,*Waste*

Tank Safety Project: Analysis of Liquid Samples from Hanford Waste Tank 241-C-103, PNL-9403. Pacific Northwest Laboratory, Richland, WA.

PNNL. ~~2000. Washington State Department of Ecology, Olympia, Washington, US Environmental Protection Agency, Region 10, Washington D.C., US Department of Energy, Office of River Protection, Richland Washington, US Department of Energy, Richland Operations, Richland, Washington.~~

~~HNF. 2001. *Hanford Site Solid Waste Acceptance Criteria*, HNF-EP-0063, as amended. April 2001. Fluor Daniel Hanford, Inc., Richland, Washington.~~

~~HNF-4240. *Organic Solvent Topical Report*, HNF-4240, Revision 1. June 2000. CH2M Hill Hanford Group, Inc., Richland, Washington.~~

~~Johnson GD.~~ 1996. *Flammable Gas Project Topical Report*, HNF-SF-1193, ~~Revision~~ Rev 1. Pacific Northwest National Laboratory, Richland, ~~Washington~~WA.

Westinghouse. 1990. ~~LMHC. 1999.~~ Internal memorandum from TD Blankenship to SM Price, *Double-Shell Tank Waste ~~Information Network System (TWINS)~~*, ~~http:twins.pnl.gov:8001/data/data.asp, for November, 2000, Lockheed Martin~~*Designation*, 82331-90-313, dated August 1990. Westinghouse Hanford ~~Corporation~~Company, Richland, ~~Washington~~ WA.

This page intentionally left blank.

Mong GM, Campbell JA, Orr RD, Clauss SA , Wahl KL and Hoopes FV. 1997. *Activity Reduction of Radioactive Mixed Wastes for Subsequent Carboxylate Determinations*, Journal of Radioanalytical and Nuclear Chemistry, Vol. 219, No. 1. Akademia Kiado, Hungary.

NRC, EPA. 1997. *Joint NRC/EPA Guidance on Testing Requirements for Mixed Radioactive and Hazardous Waste*, November 1997. US Nuclear Regulatory Commission, Washington D.C, and US Environmental Protection Agency, Washington D.C.

Paperiello CJ. 1997. Letter to Kinzer J, Office of Tank Waste Remediation System, US Department of Energy, Richland Operations Office, Richland, Washington, from Nuclear Regulatory Commission, Washington D.C, June 9, 1997. US Department of Energy, Richland, Washington.

Patello GK, Almeida TL, Campbell JA, Farmer OT, Hoppe EW, Soderquist CZ, Swoboda RG, Urie MW and Wagner JJ. 2001. *Regulatory DQO Test Plan for Determining Method Detection Limits, Estimated Quantitation Limits, and Quality Assurance Criteria for Specified Analytes.* PNNL 13429, Pacific Northwest National Laboratory, Richland, Washington.

PNL. 1993. *Methods of Chemical Analysis for Organic Waste Constituents in Radioactive Materials: A Literature Review*, Clauss SA and Bean RM, PNL-8266. Pacific Northwest Laboratory, Richland, Washington.

PNNL. 1990. *Statistical Analysis of Shard and Container Glass Correlation Test*, Pulsipher BJ, PNL-10655. Pacific Northwest National Laboratory, Richland, Washington.

Pool KH and Bean RM. 1994.

Table 3A-1 Summary of the Waste Feed Acceptance Process

3A.3.1.1	The Tank Operations Contractor submits a waste profile.
3A.3.1.2	Qualified WTP personnel perform a preshipment review by examining the waste profile and the analytical results to ensure compatibility and acceptability of the waste feed. If the review finds that the waste feed is acceptable, the WTP notifies the Tank Operations Contractor that the waste feed can be transferred. If the review finds that the waste feed is not acceptable, nonconformance actions are initiated.
3A.3.1.3	Non-conformance actions include a second review of the data and information and may include a second analysis of the split sample aliquot. If the waste feed continues to be outside of the waste acceptance criteria, adjustments (blending) may be used to change the waste composition such that acceptance criteria are met. Alternately, a change to the waste acceptance criteria may be made on a case-by-case basis (as long as there are no design or safety basis impacts and permit compliance is maintained). Otherwise, the waste will be refused for transfer (transferred to an alternative treatment or stored until other alternatives are identified).
3A.3.1.4	Acceptable waste feed is transferred from the DST system unit [a] to the WTP.
3A.3.1.5	After waste feed is received into WTP, the Tank Operations Contractor and the WTP perform confirmation volume measurements to ensure that the waste feed transferred is the waste feed that was accepted for transfer.

a. In this context, DST unit means either pretreated or conditioned waste sent directly to the LAW Facility for treatment, or waste sent to the PT Facility.

~~Section Reference~~	~~Action~~

Table 3A-2 Waste Feed Analysis, Waste Acceptance Criteria, and Nonconformance Actions

Parameter	Analytical Method [a,b]	Target Minimum Reportable Quantity [c]	Acceptance Criteria	Nonconformance Actions
TOC using persulfate oxidation method	Method 9060A or Method 415.2 (EPA 1997)	1 wt%	TOC < 10 wt%	Reject waste feed
PCBs	Method 8082A	0.025-0.05 mg/L (supernate) 0.1-0.25 mg/kg (sludge)	PCBs < 50 ppm [d]	Reject waste feed
pH	pH meter, Method 9040C	Not established; per the method, bracket the expected pH of the sample by three pH units or more apart during calibration	Acceptable pH range >7	Corrective actions to correct pH
Compatibility	ASTM D5058-90	Temperature Change = 1 °C	Acceptable temperature change < ± 20 °C No viscosity change adversely affecting waste processing	Corrective actions to eliminate incompatible conditions
Sb, As, Ba, Be, Cd, Cr, Cu, Pb, Ni, Se, Ag, Tl, V, Zn	Method 6010D	0.05-015 mg/L (supernate) 15.0-100 mg/kg (sludge)	Not applicable	Determination of toxicity characteristic metals, underlying hazardous constituents, and potential glass formation interferences
Hg	Method 7470A or 7471B	0.025-1.0 mg/L (supernate) 0.10-3.5 mg/kg (sludge)	Not applicable	Determination of toxicity characteristic metals
Semivolatile organics	Method 8270D	0.25-5.00 mg/L (supernate) 1.50-5.00 mg/kg (sludge)	Not applicable	Potential risk driver during facility performance demonstration
Volatile organics	Method 8260B	0.10-1.0 mg/L (supernate) 0.25-1.0 mg/kg (sludge)	Not applicable	Potential risk driver during facility performance demonstration

Table 3A-2 Waste Feed Analysis, Waste Acceptance Criteria, and Nonconformance Actions

Parameter	Analytical Method [a,b]	Target Minimum Reportable Quantity [c]	Acceptance Criteria	Nonconformance Actions
Organochlorine pesticides	Method 8081B	0.025-0.07 mg/L (supernate) 0.01-0.07 mg/kg (sludge)	Not applicable	Potential risk driver during facility performance demonstration
Anions	Method 9056A	150-500 mg/L (supernate) 2.50-50.0 mg/kg (sludge)	Not applicable	Potential risk driver during facility performance demonstration
Organic acids	Method 9056A	4000 mg/L (supernate) 2000 mg/kg (sludge)	Not applicable	Organic acids are not expected to affect the ability of the WTP to comply with risk assessment or air permitting limits
Ammonia / ammonium	SM 4500-NH_3-F (APHA 1992) or EPA Method 350.3 (EPA 1989)	0.08-15.0 mg/L (supernate only)	Not applicable	Potential risk driver during facility performance demonstration
Cyanide	Method 9010C / 9014 or 9012B	2.50-10 mg/L (supernate) 0.50-3.50 mg/kg (sludge)	Not applicable	Potential risk driver during facility performance demonstration

[a] Collection of samples is in accordance with ALARA requirements for contamination control and to minimize sampler exposure. The RDQO Optimization Report (24590-WTP-RPT-MGT-04-001) specified a minimum 350 g of sludge solids (if present in the tank) and 500 mL of liquid to complete the regulatory compliance testing for each WTP feed tank, however, it is anticipated that 300 mL slurry containing at least 30 g of solids per high-level waste sample, and 170 mL of supernatant liquid per low-activity waste sample shall be sufficient. Per the sampling event requirements described in the RDQO Optimization Report, the specific sample volume and number of samples to be collected are to be specified in the Tank Sampling and Analysis Plan (TSAP) for the corresponding staged feed. The sample material is collected in the field, and then sub-aliquoted (and centrifuged, if necessary) in the laboratory under controlled conditions to further reduce exposures. Per the Performance Based Measurement System approach and safe handling procedures required to limit radiological dose, sample sizes may be reduced from those recommended in the cited analyses.

[b] SW-846 Method (EPA 2014), unless specified otherwise.

[c] Typical range shown, consult RDQO Optimization Report, Table 9.3, for specific constituent requirements.

[d] Parts per million – milligrams per liter or milligrams per kilogram (approximate).

1

Table 3A-3 Summary of Dangerous Waste Numbers for WTP

Characteristic Waste Numbers				Listed Waste Numbers		
~~D001~~D001[a]	D002	~~D003~~D003[a]	D004	F001	F002	F003
D005	D006	D007	D008	F004	F005	F039 [ab]
D009	D010	D011	D018			
D019	D022	D028	D029			
D030	D033	D034	D035			
D036	D038	D039	D040			
D041	D043	~~WT01~~[b]WT01[c]	~~WT02~~[b]WT02[c]			
~~WP01~~[b]WP01[c]	~~WP02~~[b]WP02[c]					

[a] ~~Multi-source~~When WTP is configured for DFLAW, D001 and D003 wastes are not permitted.

[ab] Multisource leachate (F039) is included as a waste derived from ~~non-specific~~nonspecific source wastes F001 through F005.

[bc] Washington State criteria.

Table B1-3 Waste Feed Analysis, Waste Acceptance Criteria, and Non-Conformance Actions [C-2a(2)]

Parameter	Analytical Method[a]	Estimated Sample Volume[b]	Required Detection Limit[d]	Acceptance Criteria	Non-Conformance Actions
Total organic carbon using persulfate oxidation method	SW-846, Method 9060 or EPA Method 415.2[c]	1 mL liquid or 0.1 g solid	1 % by weight	TOC < 10 % by weight	Reject waste feed
PCBs	SW-846, Method 8082	10 to 20 mL liquid or 0.5 g solid	5 ppm[e]	PCBs < 50 ppm[e]	Reject waste feed
pH	pH Meter, SW-846, Method 9040	5 mL	1 pH unit	Acceptable pH range >7	Corrective actions to correct pH
Compatibility	ASTM[d] Method D5058-90	10 mL of each waste stream	Temperature Change = 1 °C	Acceptable temperature change < ± 20 °C No viscosity change adversely affecting waste processing	Corrective actions to eliminate incompatible conditions

[a] SW-846 Method (EPA 1997a) unless specified otherwise.

[b] Sample volume needed for each analysis.

[c] EPA Method 415.2 (EPA 1997b).

[d] American Society for Testing and Materials (ASTM 2001).

[e] Parts per million = milligrams per liter or milligrams per kilogram (approximate).

Table 3A-4 Properties for the Determination of Ignitable Waste

Regulatory Citation	Ignitable (D001) Waste Property
~~WAC 173-303-090 (5)(a)(i)~~WAC 173-303-090(5)(a)(i)	It is a liquid, other than an aqueous solution containing less than 24 % alcohol by volume, and has a flash point less than 60 °C (140 °F~~),)~~ as determined by a Pensky-~~Martin Closed Cup Tester~~Martens closed-cup tester, using the test method specified in ASTM D93, *Standard* ~~D 93-79 or D 93-80,~~*Test Methods for Flash Point by Pensky-Martens Closed Cup Tester;* or a Setaflash ~~Closed Cup Tester~~closed-cup tester, using the test method in ASTM D3278, *Standard* ~~D 3278-78~~*Test Methods for Flash Point of Liquids by Small Scale Closed-Cup Apparatus*.
~~WAC 173-303-090 (5)(a)(ii)~~WAC 173-303-090(5)(a)(ii)	It is not a liquid and is capable, under standard temperature and pressure, of causing fire through friction, absorption of moisture, or spontaneous chemical changes, and when ignited, it burns so vigorously and persistently that it creates a hazard.
~~WAC 173-303-090 (5)(a)(iii)~~WAC 173-303-090(5)(a)(iii)	It is an ignitable compressed gas that is defined in ~~49 CFR 173.115~~49 CFR 173.115, *Shippers – General Requirements for Shipments and Packagings – Class 2, Divisions 2.1, 2.2, and 2.3 – Definitions,* and is determined to be flammable by the test methods described in that regulation.
~~WAC 173-303-090 (5)(a)(iv)~~WAC 173-303-090(5)(a)(iv)	~~It is an oxidizer, if it is defined as such in 49 CFR 173.127 and 173.128.~~It is an oxidizer if defined as such in 49 CFR 173.127 or 49 CFR 173.128.

Table ~~B1-5~~3A-5 Properties for the Determination of Reactive Waste

Regulatory Citation	Reactive (D003) Waste Property
WAC 173-303-090(7)(a)(i)	It is normally unstable and readily undergoes violent change without detonating.
WAC 173-303-090(7)(a)(ii)	It reacts violently to water.
WAC 173-303-090(7)(a)(iii)	It forms potentially explosive mixtures with water.
WAC 173-303-090(7)(a)(iv)	When mixed with water, it generates toxic gases, vapors, or fumes in a quantity sufficient to present a danger to human health or the environment.
WAC 173-303-090(7)(a)(v)	It is a cyanide- or sulfide-bearing waste which, when exposed to pH conditions between 2 and 12.5, can generate toxic gases, vapors, or fumes in a quantity sufficient to present a danger to human health or the environment.
WAC 173-303-090(7)(a)(vi)	It is capable of detonation or explosive reaction if it is subjected to a strong initiating source or if heated under confinement.
WAC 173-303-090(7)(a)(vii)	It is readily capable of detonation or explosive decomposition or reaction at standard temperature and pressure.
WAC 173-303-090(7)(a)(viii)	It is a forbidden explosive, as defined in ~~49 CFR 173.54,~~49 CFR 173.54, *Shippers – General Requirements for Shipments and Packagings – Forbidden Explosives;* or a Class 1 explosive, ~~–~~ (Division 1.1, Division 1.2, Division 1.3, and Division 1.5), as defined in 49 CFR 173.50.

Table ~~B1-6~~3A-6 Secondary Solid Mixed Waste Streams

Waste Stream	Characterization	Disposal
Out-of-service melters	Designated by process knowledge.	Disposal of out-of-service melters is currently under development.
HLW glass residue		Determined case-by-case.
Melter components		These wastes will be packaged and transferred to the appropriate Hanford TSD unit.
Offgas treatment system components: • High-efficiency mist eliminators • HEPA filters • Silver mordenite canisters		
Spent carbon and catalyst from offgas treatment		
Spent ion exchange resins		
Spent ultrafilters		
Out-of-service equipment		
Entrained solids		Entrained solids may be returned to the DST system unit via pipeline as a slurry or added to the low-activity or high-level waste feed for vitrification.

Table 3A-7 Variable Solid Waste Streams

Waste Stream	Characterization	Disposal
~~Out-of-service melters~~	~~Designated by process knowledge~~	~~a~~
~~HLW glass residue~~		~~Determined case-by-case~~
~~Melter components~~Non-wastewater laboratory waste	Each generation event of these wastes will be individually designated by process knowledge and will comply with the receiving TSD waste acceptance criteria.	~~These~~The wastes will be packaged and transferred for disposal to ~~the~~an appropriate ~~Hanford~~ TSD unit.
Personal protective equipment		
Maintenance waste		

Table ~~B1-8~~3A-8 Liquid Mixed Waste Streams

Waste Stream	Characterization and Disposal	Sampling Point	Sampling Frequency
Waste feed evaporator condensate	The waste streams, not subject to recycling, will collect in a mixer tank, be designated as mixed waste by process knowledge and analysis, as necessary, and will be transferred to the LERF or ETF~~.~~ (or tanker truck, as a contingency), or DST system unit.	The streams collected in a ~~mixer~~mixed tank are grab sampled by autosampler or manually.	Sampling will be performed under the following circumstances: • ~~before~~Before initial discharge • ~~at~~At major process change or upset • ~~at~~At request for ~~re-sampling~~resampling by the ~~ETF~~receiving facility
~~LAW~~Low-activity waste melter feed evaporator condensate			
Pretreatment, LAW, and HLW off-gas condensate			
LAW and HLW melter off-gas scrubber blowdown			
Cesium process condensate			
~~Cesium~~Technetium and cesium ion exchange rinse water			
Laboratory wastewater			
Plant wastewater containing waste feed			
EMF evaporator bottoms			
EMF effluent		The streams collected in a tank are grab sampled manually or sampled in-line (confirmatory sample during transfers).	

Appendix 3B

Quality Assurance Project Plan for Waste Analysis Plan

This page intentionally left blank.

APPENDIX 3B
QUALITY ASSURANCE PROJECT PLAN FOR WASTE ANALYSIS PLAN

Contents

APPENDIX 3B QUALITY ASSURANCE PROJECT PLAN FOR THE WASTE ANALYSIS PLAN 1
3B.1.0 Introduction 1
3B.2.0 Project Description 1
3B.3.0 Characterization of the Waste Feed 2
3B.4.0 Project Management 3
3B.4.1 Project Organization and Responsibility 3
3B.4. 2 Documentation and Records 4
3B.4.3 Standard Operating Procedures 5
3B.5.0 Quality Objectives and Criteria for Measurement Data 5
3B.5.1 Data Quality Objectives 5
3B.5.2 Data Quality Indicators 6
3B.5.3 Method Detection Limits and Estimated Quantitation Limits 8
3B.5.4 Reporting Requirements 9
3B.6.0 Data Acquisition and Measurement 9
3B.6.1 Sampling Procedures and Management 9
3B.6.2 Instrument and Equipment Calibration, Testing, Inspection, and Maintenance 12
3B.6.3 Sample Preparation Methods, Analytical Methods, and Analytical Performance Requirements 13
3B.6.4 Analytical Laboratory Information Management 13
3B.6.5 Analytical Laboratory Quality Control 13
3B.7.0 Performance Assessments, Corrective Actions, and Evaluations 13
3B.7.1 Routine Analytical Laboratory Assessment and Corrective Actions 13
3B.7.2 Data Reduction and Review 14
3B.7.3 Reports to Management 14
3B.8.0 Data Report Packages 14
3B.9.0 Verification and Assessment of Analytical Data 15
3B.9.1 Data Verification 15
3B.9.2 Data Evaluation and Assessment 15
3B.10.0 References 16
3B.10.1 Project Documents 16
3B.10.2 Codes and Standards 16

3B.10.3 Other Documents 16

Tables

Table 3B-1 Data Quality Objective 7-Step Process [a] 18
Table 3B-2 Quality Control Parameters for SW-846 Test Methods 19
Table 3B-3 Analytical Method Requirements for Tank Waste Acceptance Samples 19
Table 3B-4 Proposed Sample Collection Methods 20
Table 3B-5 Sample Preservatives, Containers, and Holding Times for Tank Waste Acceptance Samples 22
Table 3B-6 Field Sampling Quality Control 23
Table 3B-7 Analytical Laboratory Quality Control 24

Figures

Figure 3B-1 WTP Sampling and Analysis Organization 25

Acronyms

ALARA~~AST M~~	as low as reasonably achievable~~American Society for Testing and Materials~~
~~BNI~~DFLAW	~~Bechtel National, Inc.~~direct feed low-activity waste
~~DOE~~	~~United States Department of Energy~~
DST	double-shell tank
~~EPA~~EMF	~~United States Environmental Protection Agency~~Effluent Management Facility
EQL	estimated quantitation limit-
HLW	~~high-level waste~~High-Level Waste (Facility)
Lab	Analytical Laboratory
LAW	~~low-activity waste~~Low-Activity Waste (Facility)
~~LDR~~LCS	~~Land Disposal Restrictions~~laboratory control sample
LIMS	laboratory information management system
MDL	method detection limit
PCB	~~Polychlorinated Biphenyl~~polychlorinated biphenyl
PT	Pretreatment (Facility)
QA	quality assurance
QAM	*Quality Assurance Manual*
~~QAPjP~~QAPP	*Quality Assurance Project Plan for the Waste Analysis Plan*
QC	quality control
RPD	relative percentage difference
~~WTP~~TSAP	~~River Protection Project – Waste Treatment and Immobilization Plant~~tank sampling and analysis plan
WAC	Washington Administrative Code
WAP	Waste Treatment and Immobilization Plant Waste Analysis Plan
WTP	Hanford Tank Waste Treatment and Immobilization Plant

APPENDIX 3B QUALITY ASSURANCE PROJECT PLAN FOR THE WASTE ANALYSIS PLAN

3B.1.0 INTRODUCTION

This Quality Assurance Project Plan (~~QAPjP) was prepared~~herein referred to ~~support~~ as "this QAPP") supports the sampling and analysis to be implemented by the ~~River Protection Project –~~ Hanford Tank Waste Treatment and Immobilization Plant (WTP), particularly in support of the ~~verification and~~ characterization of the waste feed and the characterization of secondary waste streams.

This ~~QAPjP~~QAPP will ensure that the quality and quantity of data resulting from these sampling and analysis activities can support the decision-making process for the management of WTP wastes. This ~~document~~QAPP was prepared using guidance provided in the following references:

- ~~*EPA* *~~Guidance for Quality Assurance Project Plans (EPA ~~1998).~~ 2002)
- *Test Methods for Evaluating Solid Waste~~:~~ Physical/Chemical Methods*, SW-846 (EPA ~~1997).~~ 2014)
- ~~24590-WTP-QAM-QA-06-001,~~ *Quality Assurance Manual* (~~QA Manual).~~herein referred to as "QAM")

Quality assurance (QA) and quality control (QC) ensure that an activity or project meets a required quality standard. QA is associated with record~~-~~ keeping, tracking, audits, and assessments, and it involves determining the desired level of quality and setting limits in advance. QC is associated with the controls ~~that are~~ implemented while an activity is being performed. This ~~QAPjP will comply~~QAPP complies with the applicable requirements of the ~~QA Manual~~QAM and ~~will become~~becomes effective at the commencement of laboratory operations.

Controlled copies of this ~~QAPjP~~QAPP will be kept at the WTP ~~facility~~. The Project Document Control ~~Manager~~manager, or equivalent ~~title~~, will be responsible for ensuring that controlled copies of the ~~QAPjP~~QAPP are kept current when revisions to this ~~QAPjP~~QAPP are made.

3B.2.0 PROJECT DESCRIPTION

The ~~United States~~ US Department of Energy ~~(DOE)~~ has contracted Bechtel National, Inc. ~~(BNI)~~ to design, construct, and commission the WTP. ~~DOE~~The US Department of Energy will select an alternate contractor to operate the WTP. The WTP will store and treat mixed waste currently stored in the Hanford double-shell tank (DST) system unit~~. The~~, operated by the Tank Operations Contractor. The WTP has been designed to operate under two operating configurations. In the baseline configuration, DST waste ~~feed~~ will first be ~~divided into two streams~~processed through the WTP Pretreatment (PT) Facility, and then sent on for vitrification at the Low-Activity Waste (LAW) Facility and the High-Level Waste (HLW) Facility. Alternately, if the waste meets acceptance criteria for the LAW Facility (e.g., the waste is pretreated or conditioned before transfer to WTP), the waste may be transferred directly to the LAW Facility under a direct feed operating scenario.

The WTP will commence initial operations by processing ~~and disposal purposes: high-level waste (HLW) stream, which is composed of the higher radionuclide and solids content of the waste feed,~~waste pretreated by the Tank Operations Contractor and ~~low-activity waste (LAW) stream,~~

~~which has a lower radionuclide~~fed directly to the LAW Facility. This configuration is referred to as "Direct Feed Low-Activity Waste" (DFLAW) configuration. In this configuration, the LAW Facility and ~~solids content. The LAW stream is generally the supernatant~~Analytical Laboratory (Lab) will be commissioned to operate while the PT Facility and HLW Facility construction is completed. Upon the completion of construction and successful commissioning of the PT and HLW facilities, the WTP will switch to the baseline configuration. The portion of ~~the tank waste. The treatment processes are being designed to pretreat the~~ DST waste ~~feed to separate the waste feed into the HLW and LAW streams, immobilize the waste streams~~not subject to direct feed processing (e.g., not pretreated or conditioned before transfer to WTP) will be treated in ~~a glass matrix through vitrification, and treat the off-gas to a level that protects human health and the environment.~~ the baseline configuration with the PT, LAW, and HLW facilities.

~~BNI and the~~ The Tank O~~o~~perations C~~c~~ontractor will conduct sampling and facilitate shipment for analysis ~~to characterize incoming waste feedand to assess the effectiveness of the treatment processes~~ and will provide results to the WTP for assessment against the waste acceptance criteria prior to waste receipt at WTP. The WTP's ~~S~~secondary waste will also be sampled and analyzed if process knowledge is insufficient to properly designate the secondary waste. ~~Figure B2-1 presents a simplified flow diagram showing the locations where samples will be collected for analytical testing to support regulatory decisions.~~Analysis of samples for regulatory compliance purposes will be performed by a qualified outsourced analytical laboratory subject to the provisions of this QAPP.

3B.3.0 ~~CONSTITUENTS~~CHARACTERIZATION OF ~~CONCERN~~THE WASTE FEED

~~The *River Protection Project*~~ Appendix 3A, *Waste Treatment and Immobilization Plant Waste Analysis Plan* (~~WAP) (Appendix 3A)~~24590-WTP-RPT-ENV-01-003, herein referred to as "WAP"), identifies the sampling locations and associated constituents ~~of concern for verification of the waste feed and~~ for characterization of the waste feed.

~~3.1 Waste ACCEPTANCE CRITERIA~~

~~Verification analysis determines whether the waste feed can be accepted into the WTP for processing. The verification waste~~ Waste acceptance criteria for regulatory characterization are to be met prior to waste processing by the WTP. The waste characterization parameters are as follows:

- Total organic carbon~~.~~
- Polychlorinated biphenyls ~~(PCBs).~~ (PCB)
- pH~~.~~
- Compatibility~~.~~
- Selected metals
- Selected organic compounds
- Selected anions
- Ammonia
- Cyanide

The waste acceptance criteria for regulatory characterization of the waste feed ~~verification is~~are described in ~~the~~24590-WTP-RPT-MGT-04-001, Rev 0, *Regulatory Data Quality Objectives Optimization*

Report ~~(~~[1] (herein referred to as "RDQO Optimization~~) (24590-WTP-RPT-MGT-04-001)~~ Report"). This report describes the constituents of regulatory concern and analytical methods appropriate for the characterization of the waste feed. The RDQO Optimization Report is designed to address the regulatory needs of the WTP and will be re-evaluated as a result of the environmental risk assessment, which is currently under development. The environmental risk assessment is scheduled for completion prior to the commencement of cold operation of the WTP. The RDQO Optimization Report's process is subject to periodic evaluation and may affect the list of analytes, selection of analytical methods, and associated QA/QC requirements.

~~3.2 CHARACTERIZATION OF THE WASTE FEED~~

~~The Regulatory DQO (Wiemers and others, 1998) process will determine the constituents of concern and analytical methods appropriate for the characterization of the waste feed. The Regulatory DQO (Wiemers and others, 1998) process is progressing according to the *Regulatory DQO Test Plan for Determining Method Detection Limits, Estimated Quantitation Limits, and Quality Assurance Criteria for Specified Analytes* (Patello and others, 2001) and is projected to be completed prior to commissioning of the WTP. The DQO process is an ongoing activity and may periodically change the constituents of concern and the selection of analytical methods.~~

3B.4.0 PROJECT MANAGEMENT

This section of the ~~QAPjP~~QAPP addresses the following requirements:

- Project organization and responsibility~~.~~
- Special training requirements~~.~~
- Documentation and records~~.~~
- Standard operating procedures~~.~~

3B.4.1 Project Organization and Responsibility

An example of the WTP management structure supporting sampling and analysis activities is depicted in ~~Figure B2-2.~~Figure 3B-1. These organizational structures and functions may change over the life of the ~~facility.~~ Project.

The WTP ~~QA~~ Manager of Functions and QA (or designee) reports directly to the WTP Project ~~Manager~~Director. The WTP Manager of Functions and QA ~~Manager~~ will provide independent QA oversight to ensure that onsite and subcontracted sampling and analytical laboratory activities are performed in accordance with this ~~QAPjP.~~ QAPP.

The facility managers (or designees) for ~~pretreatment, balance of facility,~~the PT Facility, Effluent Management Facility (EMF), HLW ~~vitrification~~ Facility, and LAW ~~vitrification~~ Facility, supported by the Lab Technical~~Analytical Laboratory~~ Manager, will coordinate the execution of sampling and analysis activities in their respective facilities and ensure compliance with this ~~QAPjP~~QAPP.

[1] The RDQO Optimization Report, Section 9.6, Quality Assurance, specifies compliance with ASME NQA-1-1989; however, the QAM updates this requirement and requires compliance with ASME NQA-1-2000, *Quality Assurance Requirements for Nuclear Facility Applications*.

The ~~shift~~facility operations managers (or designees) for ~~pretreatment, balance of facility, the~~ PT Facility, EMF, HLW ~~vitrification~~ Facility, and LAW ~~vitrification~~ Facility will be responsible for the activities associated with sampling in their respective facilities.

The WTP ~~Analytical Laboratory~~Lab Technical Manager (or designee) will coordinate with the Tank Operations Contractor to arrange for any required collection of tank waste samples, their packaging, and shipment to the analytical facility, including ensuring the requirements of this QAPP, as they apply, are implemented by the Tank Operations Contractor. The WTP Lab Technical Manager (or designee) will ensure that analysis is conducted in accordance with this ~~QAPjP~~QAPP. This manager will oversee the WTP onsite laboratory, and will be responsible for the coordination and technical oversight of any subcontracted laboratories, and will conduct periodic assessments to verify that subcontracted analytical laboratory ~~managers will be responsible for ensuring that this~~activities are being performed in accordance with the ~~QAPjP~~QAPP ~~is implemented in their respective laboratories.~~

Subcontracted analytical laboratory managers will be responsible for ensuring that this QAPP is implemented in their respective laboratories.

~~4.2 SPECIAL TRAINING REQUIREMENTS~~

~~Individuals involved in sampling, analysis, or data review will be trained and qualified to safely implement the activities addressed in the WAP and this QAPjP. Training will conform to the training requirements specified in the Washington Administrative Code, *Personnel Training* (WAC 173-303-330), the QA Manual, and the *River Protection Project – Waste Treatment Plant Dangerous Waste Training Plan* (Chapter 8.0).~~

~~Only individuals familiar with and trained in the requirements for waste acceptance criteria will approve waste shipments into the WTP. Evaluations will be performed by process engineers or chemists who are qualified to evaluate the waste for compatibility and acceptability for processing.~~

~~Training records will be maintained in accordance with Section 4.3 of this document~~.

3B.4.~~3~~2 Documentation and Records

This section presents the requirements associated with the development, management, and distribution of waste characterization data and documents.

3B.4.~~3~~2.1 ~~Document~~Documentation and ~~Record~~Records Procedures

Documents and records developed as part of the waste analysis program will be generated, reviewed, approved, distributed, used, controlled, and revised in accordance with approved procedures. These procedures will comply with applicable requirements of the ~~QA Manual.~~ QAM.

Organizations that generate or use data in an electronic format are responsible for complying with applicable software quality requirements specified in the ~~QA Manual~~QAM to ensure that data input (and changes to data input) is complete and accurate, and that security and integrity of the data is maintained.

3B.4.~~3~~2.2 Document and Records Storage

Documents and records will be stored and maintained according to approved procedures consistent with applicable requirements of the ~~QA Manual~~QAM. These documents and records will include, but will not be limited to, the following:

- Training ~~(see Section 4.2).~~
- Data report packages
  - Chain-of-custody forms
  - Sampling methods
  - Sampling conditions
  - Sample descriptions
  - Sample management records
  - Analytical methods
  - Data summary reports
  - QA ~~and~~ /QC reports~~.~~
- Assessment reports (including non-conformance and deficiency reports~~).~~)
- ~~Instrument~~Analytical instrument inspection, maintenance, and calibration logs~~.~~
- Records and results of waste analysis, specifically the following:
  - Waste profiles~~.~~
  - ~~Waste verification.~~
  - ~~Waste confirmation.~~
  - ~~LDR~~Land Disposal Restrictions evaluation~~.~~
  - ~~Waste~~ Notification of waste acceptance~~.~~
  - ~~Waste non-conformance.~~
  - Notification of waste nonconformance
  - Corrective actions~~.~~
  - ~~DST waste~~Waste feed characterization~~.~~
  - Secondary waste characterization

3B.4.~~4~~3 Standard Operating Procedures

Standard operating procedures for waste sampling and analysis will be developed after the system design has been completed and before waste is received for processing. Standard operating procedures will be developed, implemented, and controlled in accordance with applicable requirements of the ~~QA Manual~~QAM.

3B.5.0 QUALITY OBJECTIVES AND CRITERIA FOR MEASUREMENT DATA

3B.5.1 Data Quality Objectives

The data quality objectives for the WTP and for the characterization of the Hanford tank waste are addressed in the following subsections.

3B.5.1.1 Data Quality Objectives for the WTP

~~A DQO process [such as the seven-step procedure provided in *Guidance for the Data Quality Objectives Process* (EPA 1994)] may be implemented to support the decision-making process, particularly when complex decisions need to be made using analytical data. Using the DQO~~Using the data quality objectives process ensures that the data collected are of adequate quality and quantity to support the decision-making process. The seven steps of this process are identified in Table 3B-1, along with a summary of the key activities that are performed under each step.

3B.5.1.2 ~~RDQO~~Regulatory Data Quality Objectives Optimization for Hanford Tank Waste Characterization

Characterization of the Hanford waste feed will be performed in conformance with the process in the RDQO Optimization Report (24590-WTP-RPT-MGT-04-001~~) process.~~). This process establishes sample preparation and analytical methods suitable for determining the concentration of selected constituents of concern at method detection limits (MDL) sufficient for regulatory requirements. The RDQO Optimization Report's process is an ongoing activity and may affect the set of analytes and analytical methods, and associated QA/QC requirements.

3B.5.2 Data Quality Indicators

This section discusses the following data quality indicators:

- Analytical measurement accuracy~~.~~
- Analytical precision~~.~~
- Representativeness~~.~~

3B.5.2.1 Analytical Measurement Accuracy

Accuracy can be estimated by calculating the percentage recovery of laboratory matrix spike samples using the following equation, described in *Preparation Aids for the Development of Category II Quality Assurance Project Plans* (EPA 1991):

$$\%R = \left(\frac{s - u}{C_{sa}}\right)100$$

Where

%R = percentage recovery
s = measured concentration in spiked laboratory aliquot
u = measured concentration in un-spiked laboratory aliquot
C_{sa} = actual concentration of spike added

Accuracy can also be estimated by calculating percentage recovery for the use of standard reference materials or surrogates using the following equation, as outlined in *Preparation Aids for the Development of Category II Quality Assurance Project Plans* (EPA 1991):

$$\%R = \left(\frac{C_m}{C_{srm}}\right)100$$

Where

C_m = measured concentration of standard reference material or surrogate
C_{srm} = actual concentration of standard reference material or surrogate

~~Table B2-5~~**Table 3B-2** lists the parameters for which accuracy will be estimated.

3B.5.2.2 Analytical Precision

Precision can be estimated by analyzing matrix spikes and matrix spike duplicates. The relative percentage difference (RPD) between the analytical results for the matrix spike samples and the matrix spike duplicate samples will be calculated as outlined in *Preparation Aids for the Development of Category II Quality Assurance Project Plans* (EPA 1991): $\text{RPD} = \frac{|S_{ms} - S_{msd}|}{\left(\frac{S_{ms} + S_{msd}}{2}\right)} \times 100$

$$\text{RPD} = \frac{|S_{ms} - S_{msd}|}{\left(\frac{S_{ms} + S_{msd}}{2}\right)} \times 100$$

Where

RPD = relative percentage difference
S_{ms} = matrix spike sample
S_{msd} = matrix spike duplicate sample

Precision can also be estimated by analyzing duplicate samples. ~~The~~ The RPD~~relative percentage difference~~ between the analyte levels measured in these samples will be calculated using the following equation, provided in *Preparation Aids for the Development of Category II Quality Assurance Project Plans* (EPA 1991): $\text{RPD} = \frac{(C_1 - C_2)}{\left(\frac{C_1 + C_2}{2}\right)} \times 100$

$$\text{RPD} = \frac{(C_1 - C_2)}{\left(\frac{C_1 + C_2}{2}\right)} \times 100$$

Where

RPD = relative percentage difference
C_1 = larger of the two observed values
C_2 = smaller of the two observed values

~~Table B2-5~~**Table 3B-2** lists the parameters for which precision will be estimated.

3B.5.2.3 Representativeness

Representativeness is a qualitative QA objective that determines the degree to which a sample or group of samples is indicative of the subject being studied. It takes into account the size and volume of the sample, as well as the times and locations of sampling. The number of samples collected for the characterization of waste feed and secondary waste streams will be evaluated during the development of standard operating procedures to ensure that sampling is representative of the total waste being sampled.

Liquid samples taken within the WTP will be obtained from agitated vessels or piping systems to ensure that the sample taken represents the vessel contents.

3B.5.3 Method Detection Limits and Estimated Quantitation Limits

~~Method detection limits (~~The MDLs~~)~~ and the estimated quantitation limits (~~EQLs~~EQL) supporting waste characterization analysis have been established in the ~~RQDO~~RDQO Optimization Report (24590-WTP-RPT-MGT-04-001~~) report.~~). For other analyses supporting environmental decision-making, the laboratory will establish the MDLs and EQLs in conformance with SW-846 (EPA ~~1997~~ 2014) or other guidance.

The MDL is defined as the minimum concentration of a substance that can be measured and reported with 99~~-~~% confidence that the analyte concentration is greater than zero and is determined from analysis of a sample in a given matrix type containing the analyte.

The EQLs are defined as the lowest concentration that can reliably be achieved within specified limits of precision and accuracy during routine laboratory operating conditions. The EQL is generally 5 to 10 times the MDL. For many analytes, the EQL analyte concentration is selected as the lowest non-zero standard in the calibration curve. Sample EQLs are highly matrix-dependent.

~~The MDLs and EQLs will be determined as defined by Chapter 1 of SW-846 (EPA 1997).~~ The MDLs will include sample preparation methods, and will be determined by spiking uncontaminated water and solid (typically sand) with known concentrations.

The EQL is affected by the following:

- Sample matrix~~.~~
- Sample volume or mass used~~.~~
- Final concentrate volume or final digestate volume from sample preparation~~.~~
- Amount introduced into the instrument for quantitation~~.~~
- Use of dry or wet weight for reporting solids~~.~~

~~Each EPA method in SW-846 (EPA 1997) lists target EQLs in water, soil, or both matrices. Water EQLs are lower than those in soil or waste. For various waste types, the methods list EQL multipliers relative to water or soil.~~ The SW-846 methods stress that the EQL will differ by matrix and should be evaluated by matrix (EPA 2014).

Certain samples may be reduced in sample size or diluted for waste minimization and to comply with the as low as reasonably achievable ~~(ALARA)~~ philosophy~~.~~, referred to as "ALARA." The SW-846 ~~(EPA 1997a)~~ "method hotline" indicates that sample size is not a method modification unless detection limits are not sufficient for making decisions. Additional guidelines and acceptable minor modifications for radioactive samples have been established and agreed to as documented in the RDQO Optimization Report (24590-WTP-RPT-MGT-04-001), Section 9.8.4.

Section 3B.6.3, and ~~Table B2-5~~Table 3B-2 present the ~~project~~Project-specific analytical performance requirements.

3B.5.4 Reporting Requirements

Data generated from laboratory analyses will be reported to ~~BNI~~Bechtel National, Inc. or the ~~operations contractor~~Tank Operations Contractor in an organized format that contains the supporting information required in the data report package for the appropriate level of data ~~verification or validation.~~evaluation and assessment. Refer to Section 3B.8.0 for a discussion of the data report package and to Section 3B.9.0 for a discussion of data ~~verification~~evaluation and ~~validation.~~ assessment.

The reported data will identify the concentration units (~~such as~~ e.g., milligrams per liter) and appropriate laboratory qualifiers. Data reported as non-detected will be referenced against a stated MDL or instrument detection limit value. Values between the MDL and the EQL will be qualified and documented. If selected reporting limits are used instead of EQLs or detection limits, the reporting limits will be consistent with the specific data reporting requirements presented throughout the WAP. Target minimum reportable quantity (MRQ) ranges have been established in the RDQO Optimization Report. The MDL will be compared to the minimum reportable quantity to ensure data (non-detection results in particular) are meaningful for regulatory purposes.

3B.6.0 DATA ACQUISITION AND MEASUREMENT

The following section addresses the QA requirements for data acquisition and measurement.

3B.6.1 Sampling Procedures and Management

Subsections 3B.6.1.1 through 3B.6.1.4 provide direction on the types of sampling procedures to be implemented and the types of equipment that may be used to support the sampling, as well as guidance on how to manage and document field activities.

3B.6.1.1 Sampling Procedures and Design

The sampling procedures to be implemented for analyzing waste feed from the DST system unit to support characterization of the waste feed and the characterization of secondary waste streams are described in the following sections. Proposed sampling methods are shown in Table ~~B2-2. For samples taken at the~~3B-4. For each feed staged for transfer to the WTP, a description of the regulatory

compliance sampling activities and analytical requirements will be provided in Tank Sampling and Analysis Plans (TSAP). For samples taken at WTP, standard operating procedures for sample collection will be developed after the system design is complete and before waste is received for processing.

3B.6.1.2 Selected Sampling Equipment

Equipment selected to support waste sampling activities will meet the requirements of the specific SW-846 method (EPA ~~1997~~ 2014) or other applicable performance based analytical methods. If modifications of the procedure are needed, they will be requested in accordance with WAC 173-303-110~~.~~, *Dangerous Waste Regulations – Sampling, Testing Methods, and Analytes*.

When feasible, disposable equipment will be used to collect samples to obviate the need to decontaminate equipment after use. The process for decontamination of sampling equipment, when necessary, is presented in Section 3B.6.1.3.3.

3B.6.1.3 Sample Handling and Shipping

Personnel involved in sampling will be required to ~~have~~ read and ~~understood~~understand the operating procedures for sampling before implementing sampling activities. The sample preservation, containers, and holding times for each of the types of analyses to be performed are specified in ~~Table B2-3.~~ Table 3B-5.

Storage conditions will be evaluated to ensure that the samples remain representative. Samples collected for waste feed characterization will ~~normally~~ be ~~transported~~collected, packaged, and shipped by the Tank Operations Contractor to ~~the analytical~~ a WTP contracted laboratory ~~pneumatically~~. Collection methods, packaging, and shipping instructions will be addressed in the TSAP and will be governed by Tank Operations Contractor procedures consistent with SW-846 (EPA 2014), where applicable, with allowances for sample size reduction to maintain personnel dose rates as low as reasonably achievable. The specific description of sample collection activities will be included in the TSAPs for each WTP feed compliance sampling event.

The samples will not be chemical or ~~manually~~thermally preserved during transfer or shipment to the (these preservation techniques react with the tank waste). Care will be taken during sampling to avoid the temporary storage of samples in excessively high or low temperatures. The samples shall be shipped on the same day as sampled whenever possible to meet analytical holding time requirements.

A unique identification number generated by the laboratory information management system ~~-~~ (LIMS) will be marked on sample containers before collecting the sample. This number will be recorded on the chain-of-custody form. The sample labeling and chain-of-custody documentation will be checked to ensure the traceability of each of the samples.

3B.6.1.3.1 Chain-of-Custody

The ability to demonstrate that samples were obtained from the locations specified in the applicable WAP and that they reached the laboratory without alteration are key considerations for data resulting from laboratory analysis. Evidence of collection, shipment, ~~reception~~receipt at the laboratory, and laboratory custody until disposal will be documented using a chain-of-custody form. The chain-of-custody form will, as a minimum, supply the following information:

- Sample identification number~~.~~
- Sample volume~~.~~

- Number of sample bottles/type.
- Method of sampling.
- Sampling date and time.
- Sampling location.
- Name of the contact person.
- Shipping date.
- Analyses to be performed.
- Preservation method.
- Sample characteristics., (if any.)

A sample will be considered to be in custody when it is under any of the following conditions:

- In a person's possession.
- In view, after having been in a person's physical possession.
- Locked so that it cannot be tampered with, after having been in a person's physical custody.
- Sealed with tamper-proof seal.
- In a secured area, restricted to authorized personnel only.

Chain-of-custody forms will be included in the final data report package. Electronic chain-of-custody forms and electronic signatures may be used.

The chain-of-custody practices and procedures for the WTP will address the following general requirements for custody records:

- Sample management planning and procedures will identify responsibilities, including interfaces between organizations for documenting possession of a sample from collection and identification through handling, preservation, shipment, transfer, analysis, storage, and final disposition.
- Sample traceability will ensure that it can be tracked from its collection through final disposition.
- Sample identification will be documented and checked before the sample is released.
- If individual samples have specific custody requirements, as required by documents such as the WAP, TSAP, test plans, study plans or job packages, these requirements will be implemented.
- For samples with limited use or storage life, methods will be established that preclude using an out-of-date sample.

Implementing documents will identify those representative samples that need to be archived.

3B.6.1.3.2 Sample Preservation, Containers, and Holding Time

~~Table B2-3~~Table 3B-5 lists the sample container, preservation method, and holding time requirements for different types of analyses.

3B.6.1.3.3 Maintaining and Decontaminating Field Equipment

Field equipment used to support waste monitoring and sampling activities will be maintained in accordance with manufacturer guidelines, and will be decontaminated prior to use. Disposable sampling

equipment will be used whenever possible due to the high concentrations of radionuclides in the waste materials to be sampled.

Equipment decontamination will be performed according to approved procedures and consistent with guidance provided in the following references or by the manufacturer:

- SW-846, *Test Methods for Evaluating Solid Waste—: Physical/Chemical Methods*, SW-846 (EPA 1997). 2014)
- *A Compendium of Superfund Field Operations Methods* (EPA- 1987).)

3B.6.1.4 Sampling Quality Assurance and Quality Control Procedures

The WTP sampling procedures for characterization of waste feed and secondary waste streams shallwill be developed in accordance with the requirements of this QAPjP. QAPP. The QA audits and surveillances of sampling activities will be conducted by the WTP QA Manager of Functions and QA (or designee) to verify the implementation of QAPjPQAPP requirements. Management assessments will also be performed by the WTP Analytical LaboratoryLab Technical Manager (or designee) to ensure that the waste sampling program is adequate and effective.

Revisions to established sampling procedures will be reviewed to determine their possible impacts on data quality and approved by authorized personnel prior to issuance and implementation. Field records and documentation, including field measurements, will be handled and preserved in a manner consistent with Section 3B.4.32 of this QAPjPQAPP.

Quality assuranceThe QA surveillances and audits, management assessments, corrective actions, and root cause analyses will be implemented as described in Section 3B.7.10 of this QAPjP. QAPP.

Sampling quality control (QC) procedures may involve the collection of blanks and duplicate samples. The purpose and frequency of collection for each of these samples are presented in Table B2-4,Table 3B-7 together with sampling QC objectives.

3B.6.2 Instrument and Equipment Calibration, Testing, Inspection, and Maintenance

The following sections address instrument calibration, testing, inspection, and maintenance requirements for waste anaylsis. analysis.

3B.6.2.1 Instrument Calibration Frequency

LaboratoryAnalytical laboratory personnel will be responsible to ensure that instruments are calibrated in accordance with approved procedures. Instrument calibration will comply with applicable QA/QC requirements of the applicable analytical method. Instrument calibration records will be managed in accordance with Section 3B.4.32 of the QAPjP. this QAPP.

3B.6.2.2 Instrument and Equipment Testing, Inspection, and Preventive Maintenance Requirements

The Laboratory ManagerThe analytical laboratory management (or designee) will ensure that laboratory instruments are routinely tested and inspected to confirm that they are in proper working order.

Preventive maintenance schedules recommended by the equipment manufacturer will be implemented and documented. Instrument maintenance records will be managed in accordance with Section 3B.4.2 of this QAPP.

3B.6.3 Sample Preparation Methods, Analytical Methods, and Analytical Performance Requirements

The sample preparation methods, analytical methods, and performance requirements (~~such as~~ e.g., EQL, precision, and accuracy) for analyses are summarized in ~~Table B2-5,~~ Table 3B-3 and Table 3B-2, and are consistent with the requirements specified in SW-846 (EPA ~~1997) or as negotiated~~ 2014) and in conformance with the regulatory data quality objectives identified in the RDQO Optimization Report (24590-WTP-RPT-MGT-04-~~004, Rev 0~~001). Any applicable analytical method provided in WAC 173-303-110 may be used for analysis. If an analytical method used for regulatory purposes other than the methods provided in WAC 173-303-110 are proposed, approval of the method will be requested from Ecology according to WAC 173-303-910(2), *Dangerous Waste Regulations – Petitions*. The proposed analytical method will not be used for regulatory purposes until Ecology authorizes the method. If modifications to a procedure are needed, they will be requested in accordance with WAC 173-303-110(4). The SW-846 ~~(EPA 1997a)~~ "method hotline" indicates that sample size is not a method modification unless detection limits are not sufficient for making decisions.

3B.6.4 Analytical Laboratory Information Management

The ~~laboratory information management system (~~LIMS~~)~~ is part of the ~~plant information network~~Plant Information Network (PIN) system. Sample and QC data generated by the analytical laboratory will be stored in the LIMS database. At a minimum, this database will hold the sample number, sample collection date, analysis date, analytical methods employed, analytical results, and ~~validation~~ qualifiers. In the event of a LIMS system failure, this information will be recorded in paper form and entered into LIMS ~~once~~when the system is operating. For a more complete description of these software systems, refer to Section 3A.7.0 of the WAP.

3B.6.5 Analytical Laboratory Quality Control

~~Laboratory~~The analytical laboratory QC procedures will involve the analysis of duplicates, method blanks, and matrix spike samples. The purpose and frequency for each of these samples ~~is~~are presented in ~~Table B2-6.~~Table 3B-7.

3B.7.0 PERFORMANCE ASSESSMENTS, CORRECTIVE ACTIONS, AND EVALUATIONS

The following subsections address assessment and oversight requirements.

3B.7.1 Routine Analytical Laboratory Assessment and Corrective Actions

The WTP Lab Technical Manager (or designee) will conduct periodic assessments to verify that laboratory procedures meet the requirements of this ~~QAPjP.~~ QAPP. The QA surveillances and audits will be conducted by the WTP ~~QA~~ Manager of Functions and QA (or designee) to ensure that laboratory activities comply with applicable QA requirements. Management assessments will also be performed by the WTP ~~Analytical Laboratory~~Lab Technical Manager (or designee) to ensure that the laboratory

program is adequate and effective. Management assessments, QA surveillances and audits, corrective action, and root cause analyses will be conducted according to approved procedures.

3B.7.2 Data Reduction and ~~VALIDATION~~Review

Data reduction and ~~validation~~review procedures will be developed for data generated for environmental compliance according to the requirements of the current version of SW-846 (EPA ~~1997~~2014) or other applicable guidance, prior to the operation of the analytical laboratory. ~~Validation~~Evaluation and ~~verification~~assessment of analytical data is discussed in Section 3B.9.0.

3B.7.3 Reports to Management

Conditions identified as having an adverse effect on quality, the significance of such conditions, and corrective actions will be documented, reported to the appropriate level of management, and resolved according to approved procedures.

The assessment reports may include the following items, as appropriate:

- Deviations from the requirements specified in this ~~QAPjP.~~ QAPP.
- Limitations or constraints on the applicability of the resulting analytical data.
- Results of QA surveillances and audits of the waste analysis program.
- Management assessments of data quality in terms of MDLs, precision, accuracy, and representativeness. The quantitative performance indicators for precision and accuracy are given in ~~Table B2-5.~~ Table 3B-2.

3B.8.0 DATA REPORT PACKAGES

The data reports received from the laboratory will serve as documentation of an analytical project. The primary data reporting will be by electronic systems. The following are examples of the information contained in data reports documenting environmental support activities:

- Sample identifications~~.~~
- Holding times, including the following:
  - Sampling date~~.~~
  - Date the laboratory received the sample~~.~~
  - Extraction or preparation date~~.~~
  - Analysis date~~.~~
  - Re-extraction or re-analysis dates~~.~~
- Analytical parameters~~.~~
- QC, including the following:
  - Laboratory control sample (LCS) / standard including percent recovery
  - Preparation blanks, including identity and concentration of each constituent identified
  - Sample, duplicate (including RPD) and replicate results
  - Recovery results of matrix spikes, matrix spike duplicates, or post digestion spikes (if matrix spike not performed)

  - Detection limits
  - Report uncertainty/counting error for radiochemical analysis
  - Additional data reporting (that is, the percent of moisture/solid or correction for equivalent dry weight)
- QA, including the following:
  - Descriptions of procedures and methods used to generate the results.
  - Deviations from procedures.
  - Analytical anomalies for raw data results, spikes, surrogates, and method blanks.
  - Analytical qualifiers.
  - Calibration and instrument tuning.
  - Corrective actions implemented.
- Raw analytical data, as appropriate.
- Chain-of-custody, as appropriate.

3B.9.0 VERIFICATION AND VALIDATIONASSESSMENT OF ANALYTICAL DATA

TheA graded approach to data verification and validationassessment processes will ensure that the data resulting from the selected analytical method are consistent with the requirements specified in this QAPjP. Persons performing data verification orQAPP. Data validation will be trained according to Section 4.2performed when necessary.

3B.9.1 Data Verification

The primary data reporting will be byvia electronic data systems. Data verification will be performed on laboratory data packages that support environmental compliance to ensure that their content is complete and in order. A page by pageA review of the data package will be performed to ensure thatthe following:

- The data package contains the required technical information.
- Deficiencies are identified and documented.
- Identified deficiencies are corrected by the laboratory and the appropriate revisions are made.
- Deficient pages are replaced with the laboratory corrections.
- Data package revisions are tracked.
- A copy of the completed verification report is placed in the data file.

3B.9.2 Data VALIDATIONEvaluation and Assessment

Data validation ensureswill be evaluated to ensure that the data resulting from analytical measurements meet the quality requirements specified in this QAPjP. Data validationthe applicable data quality objectives. A data review will be performed on data packages that support environmental compliance. to ensure the following parameters are met:

- Precision
- Accuracy
- Representativeness
- Comparability
- Completeness
- Sensitivity (detection limits).

A ~~validation~~ plan for assessing the data will be developed and implemented prior to the operation of the laboratory~~, according to guidance found in SW-846, Chapter 4 (EPA 1997), or other appropriate guidance~~.

~~10.0 DATA QUALITY ASSESSMENT~~

Data obtained will be evaluated to determine whether they are of the appropriate type, quality, and quantity to support their intended use. Such data quality assessment will be performed, in accordance with *Guidance for Data Quality Assessment* (EPA 1996), on data packages ~~used to ensure environmental compliance~~as necessary to determine acceptability and process ability of the waste, for assessment of secondary waste characteristics, to ensure environmental compliance in accordance with applicable data quality objectives.

~~11~~3B.10.0 REFERENCES

~~11~~3B.10.1 Project Documents

~~24590-WTP-PL-ENV-01-002, *River Protection Project – Waste Treatment Plant Dangerous Waste Training Plan.*~~

24590-WTP-QAM-QA-~~01~~06-001, *Quality Assurance Manual*~~.~~ (QAM).

~~24590-WTP-RPT-ENV-01-003, *River Protection Project – Waste Treatment Plant Waste Analysis Plan.*~~

24590-WTP-RPT-MGT-04-001, Rev~~.~~ 0, *Regulatory Data Quality Objectives Optimization Report* (RDQO Optimization Report).

~~11~~3B.10.2 Codes and Standards

~~ASTM. 2001. *Standard Test*~~ ASME NQA-1-2000. *Quality Assurance Requirements for Nuclear Facility Applications*. The American Society of Mechanical Engineers, New York, NY.

WAC 173-303-110. *Dangerous Waste Regulations – Sampling, Testing Methods, and Analytes*. Washington Administrative Code

WAC 173-303-910. *Dangerous Waste Regulations – Petitions*. Washington Administrative Code.

3B.10.3 Other Documents

ASTM D5058-12. 2012. *Standard Practices for Compatibility of Screening Analysis of Waste*~~, Method D5058-90.~~ American Society for Testing and Materials, West Conshohocken, ~~Pennsylvania~~PA.

ASTM D3987-85. 2004. *Standard Test Method for Shake Extraction of Solid Waste with Water*. American Society for Testing and Materials, West Conshohocken, PA.

EPA. ~~1987.~~ 1974. *Nitrogen, Ammonia (Potentiometric, Ion Selective Electrode)*, Method 350.3. US Environmental Protection Agency, Washington, DC.

EPA. Method 350.3. *A Compendium of Superfund Field Operations Methods*, EPA/540/P-87/001b~~.~~, August 1987. US Environmental Protection Agency, Washington, ~~D.C~~DC.

EPA.~~-~~ 1991. *Preparation Aids for the Development of Category II Quality Assurance Project Plans*, EPA/600/8-91/004. US Environmental Protection Agency, Washington, ~~D.C~~DC.

EPA. ~~1994~~ 1993. *Determination of Inorganic Anions by Ion Chromatography*, Method 300.0. US Environmental Protection Agency, Office of Research and Development, Cincinnati, OH.

EPA. 2002. *Guidance for Quality Assurance Project Plans*, EPA QA/G-5, EPA/240/R-02/009. US Environmental Protection Agency, Office of Environmental Information, Washington, DC.

EPA. 2006. *Guidance for the Data Quality Objectives Process*, EPA QA/G-4, ~~September 1994.~~EPA/240/B-06/001. US Environmental Protection Agency, Office of Environmental Information, Washington, ~~D.C~~DC.

~~EPA. 1996. *Guidance for Data Quality Assessment*, EPA QA/G-9. US Environmental Protection Agency, Washington, D.C.~~

~~EPA. 1997.~~EPA. 2014. *Test Methods for Evaluating Solid Waste~~,~~: Physical~~/~~Chemical Methods*, SW-846, ~~Third Edition~~ Update V, as amended. US Environmental Protection Agency, Washington, ~~D.C.~~DC. https://www.epa.gov/hw-sw846/sw-846-compendium (accessed May 2, 2016).

~~EPA. 1998. *EPA Guidance for Quality Assurance Project Plans*, EPA QA/G-5, February 1998. US Environmental Protection Agency, Washington, D.C.~~

~~WAC 173-303. *Dangerous Waste Regulations*, Washington Administrative Code.~~

Table 3B-1 Data Quality Objective 7-Step Process [a]

	Key Activities
Step 1: State the problem	• Identify the constituents of concern • Develop a conceptual site model • Formulate a concise problem statement
Step 2: Identify the decisions	• Identify the ~~principle~~principal study questions that the study will attempt to resolve • Identify the alternative actions that may result once each of the principal study questions has been resolved • Integrate the principal study questions and alternative actions to form decision statements
Step 3: Identify required inputs	• Identify the information needed to resolve each decision statement • Define the source and level of quality for the information needed • Determine whether data of adequate quality already exist
Step 4: Define study boundaries	• Define the population of interest and the geographic area or volume to which each decision statement applies • Divide the population into statistically-based strata with relatively homogeneous characteristics • Define the temporal boundaries of the problem • Define the time frame to which each decision applies • Determine when to collect the data
Step 5: Develop a decision rule	• Define the statistical parameters (~~such as~~ e.g., mean, upper confidence limit) • Determine the final action • Develop "if… then…" statements that incorporate the parameter of interest, scale of decision-making, action level, and actions that would result from the decision
Step 6: Specify tolerable limits on decision errors	• Define the expected concentration range for the analyte of interest • Identify the decision error • Define the null hypothesis • Select a statistical vs. non-statistical sampling design • For statistical designs, define the boundaries of the gray region and set tolerable limits for decision error
Step 7: Optimize the design	Non-statistical design • Summarize applicable screening method alternatives • Summarize applicable sampling method alternatives • Develop an integrated screening or sampling design Statistical design • Identify statistical sampling design alternatives (~~such as~~ e.g., simple random, stratified random) and select the preferred option • Select the statistical hypothesis test for testing the null hypothesis • Evaluate various design options by varying the decision error criteria and width of the gray region • Select the preferred sampling design

[a] *Guidance for the Data Quality Objectives Process* (EPA ~~1994~~2006)

Table 3B-2 Quality Control Parameters for SW-846 Test Methods

Analytes	Method	QC Acceptance Criteria			
		LCS % Recovery	Spike % Recovery	MSD / Dup Relative Percent Difference	Replicate % Relative Standard Deviation
Metals	6010D	80-120%	75-125%	≤ 20%	≤ 20%
Hg	7470A or 7471B	80-120%	75-125%	≤ 20%	≤ 20%
pH	9040C	±0.1 pH unit	NA	NA	NA
Volatile organic compounds	8260B	70-130%	50-150%	≤ 30%	≤ 30%
Semivolatile organic compounds	8270D	70-130%	50-150%	≤ 30%	≤ 30%
PCBs	8082	70-130%	50-150%	≤ 30%	≤ 30%
Inorganic anions	9056A	80-120%	75-125%	< 20%	< 20%
Cyanide	Method 9010C / 9014 or 9012B	80-120%	75-125%	< 20%	< 20%
Ammonia	SM 4500-NH_3 F (APHA 1992) or Method 350.3 (EPA 1989)	80-120%	75-125%	< 20%	< 20%
Pesticides	8081B	70-130%	50-150%	≤ 30%	≤ 30%

Table 3B-3 Analytical Method Requirements for Tank Waste Acceptance Samples

Constituent	Target EQL	Analytical Method Error! Reference source not found.	
		Solid	Liquid
Total organic carbon	10 mg/L	Method 9060A	Method 9060A or Method 415.2 (EPA 1997)
PCBs	3.3 mg/L	8082A	8082A
pH	2 to 12.5 pH units	9040C	9040C
Compatibility	± 1 °C	Not Applicable	ASTM D5058-12
Metals, except mercury	See RDQO Optimization Report, Section 9.8.3	6010D	6010D
Mercury	See RDQO Optimization Report, Section 9.8.3	7471B	7470A
Volatile organic compounds	See RDQO Optimization Report, Section 9.8.3	8260B	8260B
Semivolatile organic compounds	See RDQO Optimization Report, Section 9.8.3	8270D	8270D

Table 3B-3 Analytical Method Requirements for Tank Waste Acceptance Samples

Constituent	Target EQL	Analytical Method Error! Reference source not found.	
		Solid	Liquid
Inorganic anions	See RDQO Optimization Report, Section 9.8.3	Method 300.0 (EPA 1993) / 9056A or ASTM D3987-85 / 9056A	9056A
Cyanide	See RDQO Optimization Report, Section 9.8.3	9010C/9014 or 9012B	9010C/9014 or 9012B
Ammonia	See RDQO Optimization Report, Section 9.8.3	Not Applicable	SM 4500-NH_3-F (APHA 1992) or Method 350.3 (EPA 1974)
Pesticides	See RDQO Optimization Report, Section 9.8.3	8081B	8081B

[a] SW-846 Method (EPA 2014), unless specified otherwise.

Table 3B-4 Proposed Sample Collection Methods

Waste Category	Waste Type	Sample Purpose	Type of Sample
DST system unit waste feed	Staged tank waste	Waste ~~verification~~[a]acceptance [a]	Representative ~~split~~grab sample ~~from the Department of Energy~~
	~~As received waste~~	~~Waste acceptance~~[b]	~~Grab~~
Solid	**Mixed Waste Streams**		
	ILAW/IHLW product verification	ILAW/IHLW characterization	Grab
	Entrained solids	Secondary waste characterization	Grab
	Spent ion exchange resin	Secondary waste characterization	Grab
	~~Off-gas~~Offgas treatment system equipment and components	Secondary waste characterization	Grab or smear
	Spent carbon and catalyst from ~~off-gas~~offgas treatment	Secondary waste characterization	Grab
	Out-of-service equipment	Secondary waste characterization	Grab or smear
	Dangerous or Mixed Waste Streams		

Table 3B-4 Proposed Sample Collection Methods

Waste Category	Waste Type	Sample Purpose	Type of Sample
	~~Laboratory~~Lab waste	Secondary waste characterization	Grab
	Maintenance waste	Secondary waste characterization	Grab
	Used personal protective equipment	Secondary waste characterization	Grab
Liquid	**Mixed Waste Streams**		
	Waste feed evaporator ~~condensate~~[c] condensate [b]	Secondary waste characterization	Grab
	LAW melter feed evaporator ~~condensate~~[c] condensate [b]	Secondary waste characterization	Grab
	LAW and HLW ~~off-gas condensate~~[c] offgas condensate [b]	Secondary waste characterization	Grab
	LAW and HLW melter off-gas scrubber ~~blowdown~~[c] blowdown [b]	Secondary waste characterization	Grab
	Cesium process ~~condensate~~[c] condensate [b]	Secondary waste characterization	Grab
	Cesium ion exchange rinse ~~water~~[c] water [b]	Secondary waste characterization	Grab
	Plant wastewater containing DST ~~waste~~[c] waste [b]	Secondary waste characterization	Grab
Liquid	**Dangerous or Mixed Waste Streams**		
	Maintenance waste	Secondary waste characterization	Grab
	Off-specification chemicals	Secondary waste characterization	Grab
Effluent	EMF effluent	Verification that effluents meet the disposal facility waste acceptance criteria	Grab or in-line
	Nonradioactive liquid waste disposal system effluent	Verification that effluents meet the Treated Effluent Disposal Facility system unit waste acceptance criteria	Grab

~~a Subject~~[a] Subject to requirements of the RDQO Optimization Report (24590-WTP-RPT-MGT-04-001).
~~b Refer to table B2-2.~~

[c] ~~These~~[b] These aqueous waste streams are collected in the effluent mixing tank prior to sampling.

Table 3B-5 Sample Preservatives, Containers, and Holding Times for Tank Waste Acceptance Samples

Analysis	Container [a]	Preservative [b]	Holding Time
Liquid Samples			
Total organic carbon	Plastic	None	28 days
PCB compounds	Glass with Teflon-lined screw cap	None	14 days (extraction) 40 days (analysis)
pH	Plastic	None	Analyze as soon as possible
Compatibility	Plastic	None	Analyze as soon as possible
Inorganic anions	Plastic	None	7 days
Ammonia	Glass with Teflon-lined screw cap	None	28 days
Metals, except mercury	Plastic	None	6 months
Mercury	Plastic	None	28 days
Cyanide	Glass with Teflon-lined screw cap	None	14 days
Volatile organic compounds	Glass with Teflon-lined screw cap	None	14 days
Semivolatile organic compounds	Amber glass	None	14 days (extraction) 40 days (analysis)
Organic acids	Glass with Teflon-lined screw cap	None	14 days
Pesticides	Glass with Teflon-lined screw cap	None	14 days (extraction) 40 days (analysis)
Solid Samples			
Total organic carbon	Plastic	None	28 days
PCB compounds	Glass with Teflon-lined screw cap	None	14 days (extraction) 40 days (analysis)
pH	Plastic	None	Analyze as soon as possible
Compatibility	Plastic	None	Analyze as soon as possible
Inorganic anions	Plastic	None	7 days
Metals, except mercury	Glass	None	6 months
Mercury	Glass	None	28 days
Cyanide	Glass with Teflon-lined screw cap	None	14 days
Volatile organic compounds	Glass with Teflon-lined screw cap	None	14 days
Semivolatile organic compounds	Glass	None	14 day (extraction) 40 days (analysis)
Organic acids	Glass with Teflon-lined screw cap	None	14 days
Inorganic anions	Plastic	None	28 days

Table 3B-5 Sample Preservatives, Containers, and Holding Times for Tank Waste Acceptance Samples

Analysis	Container [a]	Preservative [b]	Holding Time
Pesticides	Glass with Teflon-lined screw cap	None	14 days (extraction) 40 days (analysis)

Notes:

[a] Collection of samples is in accordance with ALARA requirements for contamination control and to minimize sampler exposure. The RDQO Optimization Report (24590-WTP-RPT-MGT-04-001) specified a minimum 350 g of sludge solids (if present in the tank) and 500 mL of liquid to complete the regulatory compliance testing for each WTP feed tank, however, it is anticipated that 300 mL slurry containing at least 30 g of solids per HLW sample, and 170 mL of supernatant liquid per sample shall be sufficient. Per the sampling event requirements described in the RDQO Optimization Report, the specific sample volume and number of samples to be collected are to be specified in the TSAP for the corresponding staged feed. The sample material is collected in the field, and then sub-aliquoted (and centrifuged, if necessary) in the laboratory under controlled conditions to further reduce exposures. Per the Performance Based Measurement System approach and safe handling procedures required to limit radiological dose, sample sizes may be reduced from those recommended in the analytical methods identified in Table 3B-3 and Table 3B-2.

[b] Methodologies may be modified per requirements of the RDQO Optimization Report.

Table 3B-6 Field Sampling Quality Control

Sample Type	Frequency	Purpose
Water blank	The frequency will be determined and documented in operating procedures before sampling operations are begun. The minimum frequency shall be once per sampling event.	This will be a water sample that receives the same analysis steps as the sample for the specified procedure. The blank will confirm that the water is not contaminated.
Equipment blank		A sample of analyte-free water used to rinse the sampling equipment. It is used to document adequate decontamination of sampling equipment [a]. Analysis will be for tests performed for the specified procedure.
Duplicate		This QC sample is a second aliquot of the collected sample and is used to determine method precision.
Trip blank	The frequency will be determined and documented in operating procedures before sampling operations are begun. The minimum frequency shall be once per shipping container for samples subject to volatile organic compound analysis.	A sample of analyte-free water that accompanies sample containers to and from the field. These samples are used to detect any contamination or cross-contamination during sample handling and transportation.

[a] Decontamination will be performed if disposable equipment cannot be used.

Table 3B-7 Analytical Laboratory Quality Control

Sample Type	Frequency	Purpose
Duplicate	The frequency will be determined and documented in operating procedures before analytical operations are begun. The minimum frequency will be once per sample batch.	This QC sample is a second aliquot of the collected sample and is used to determine method precision.
Method blank		An analyte-free matrix to which reagents are added in the same volumes or proportions as those used in sample processing. It is used to document contamination resulting from the analytical process. This method blank will be carried through the complete sample preparation and analytical procedure.
Matrix spike or matrix spike duplicate		This QC sample is spiked with known quantities of analytes. Matrix spikes and matrix spike duplicate quality control samples are used to assess the accuracy and precision of the analytical method.
Laboratory Control Sample	The frequency will be determined and documented in operating procedures before analytical operations are begun.	The LCS may be a matrix-matched reference material, or if one is not available, a blank spike that is put through the analytical process. For methods that lack a suitable LCS, or when no sample preparation is required, calibration verification standards (initial calibration verification or continuing calibration verification) or system performance checks may be used to verify analytical accuracy.

Figure 3B-1 WTP Sampling and Analysis Organization

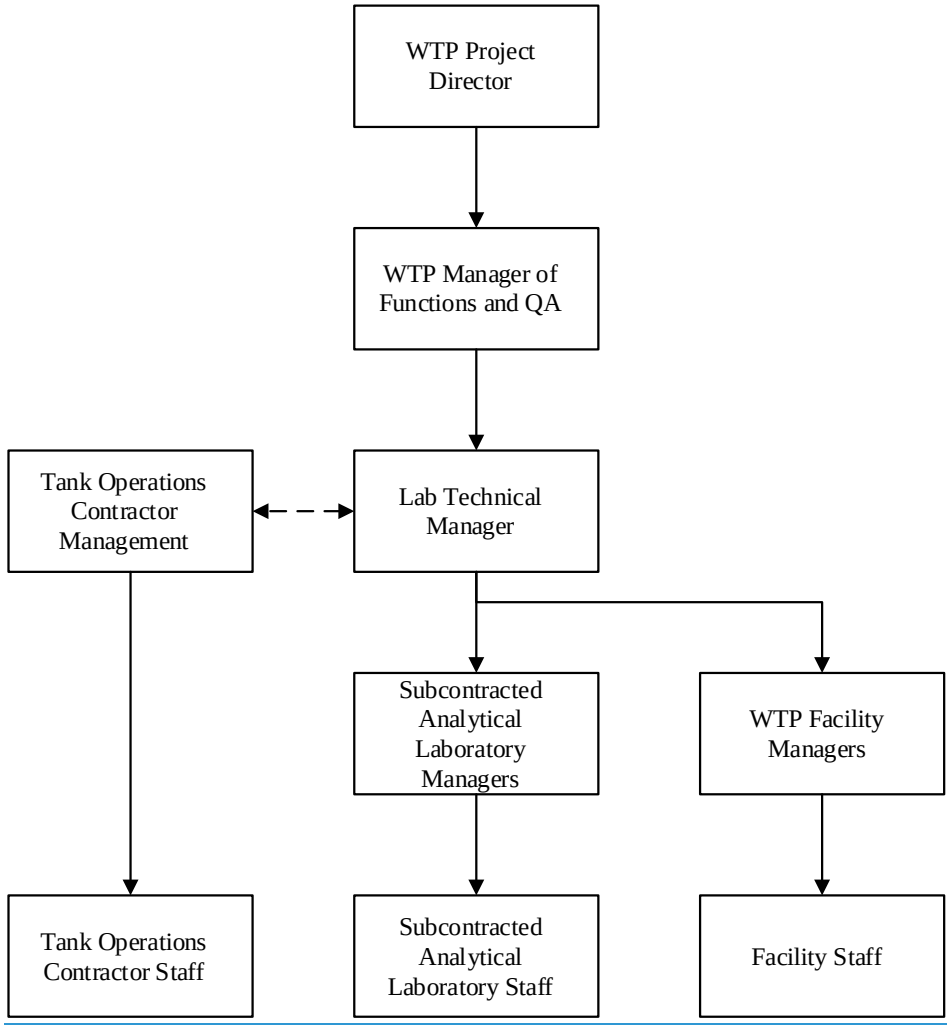

This page intentionally left blank.

CHAPTER 4.0
PROCESS INFORMATION

This page intentionally left blank.

CHAPTER 4.0
PROCESS INFORMATION

TABLE OF CONTENTS

4.0 PROCESS INFORMATION 1
4.1 Process Description 1
4.1.1 Process Overview 2
4.2 Tank Systems 6
4.2.1 Design, Installation, and Assessment of Tank Systems 6
4.2.1.1 Design Requirements 6
4.2.1.2 Physical Information for Tanks 7
4.2.2 Ancillary Equipment Requirements 8
4.2.2.1 Transfer or Pressure Control Devices 8
4.2.2.2 Bulges 9
4.2.2.3 Description of WTP Piping System 10
4.2.2.4 Description of Foundations 13
4.2.3 Integrity Assessments 13
4.2.4 Additional Requirements for Existing Tanks 14
4.2.5 Additional Requirements for New Tanks 14
4.2.5.1 Additional Requirements for New On-Ground or Underground Tanks 14
4.2.6 Secondary Containment and Release Detection for Tank Systems 14
4.2.6.1 Secondary Containment System Requirements 16
4.2.6.2 Management of Release or Spill to Sump and Secondary Containment Drain Systems 20
4.2.6.3 Additional Requirements for Secondary Containment 20
4.2.7 Variances from Secondary Containment Requirements 20
4.2.8 Tank Management Practices 20
4.2.9 Labels or Signs 21
4.2.10 Air Emissions 22
4.2.10.1 Tank System Emissions 22
4.2.10.2 Process Vents 22
4.2.10.3 Equipment Leaks 22
4.2.10.4 Tanks and Containers 22
4.2.11 Management of Ignitable, Reactive and Incompatible Waste in Tanks 22
4.3 LAW and HLW Miscellaneous Treatment Sub-Systems [WAC 173-303-680 and WAC 173-303-806(4)(i)] 23

4.3.1 Melter Capacity and Production 23
4.3.2 Description of Melter Units [WAC 173-303-806(4)(i)(i)] 23
4.3.3 Automatic Waste Feed Cut-Off System 25
4.3.4 Offgas Treatment System 26
4.3.5 Miscellaneous Unit Emissions Performance 26
4.3.6 Physical and Chemical Characteristics of Waste [WAC 173-303-680(2)(a)(i)] 27
4.3.7 Environmental Performance Standards for Melter Systems [WAC 173-303-680(2)] 27
4.3.7.1 Protection of Groundwater, Subsurface Environment, Surface Water, Wetlands and Soil Surface [WAC 173-303-680(2)(a) and (b)] 28
4.3.7.2 Protection of the Atmosphere [WAC 173-303-680(2)(c)] 28
4.3.8 Treatment Effectiveness Report [WAC 173-303-806(4)(i)(iv)] 28
4.3.9 Approach to Risk Assessment [WAC 173-303-680(2)(c)(i) through (vii)] 28
4.4 Other Waste Management Units 29
4.4.1 Waste Piles 29
4.4.2 Surface Impoundments 29
4.4.3 Incinerators 29
4.4.4 Landfills 30
4.4.5 Land Treatment 30
4.4.6 Air Emissions Control 30
4.4.7 Waste Minimization 30
4.4.8 Groundwater Monitoring for Land-Based Units 30
4.4.9 Functional Design Requirements 30

Chapter 4 Appendices Table of Contents

APPENDIX 4A 4A
Figures and Drawings 4A-1
APPENDIX 4C 4C
Compliance with Uniform Building Code 4C-1
APPENDIX 4D 4D
Pretreatment Facility Process Description 4D-1
APPENDIX 4E 4E
Low-Activity Waste Vitrification Facility Process Description 4E-1
APPENDIX 4F 4F
High-Level Waste Vitrification Facility Process Description 4F-1
APPENDIX 4G 4G
Direct-Feed Low Activity Waste Facility (EMF) Process Description 4G-1
APPENDIX 4H 4H
Analytical Laboratory Process Description 4H-1
APPENDIX 4I 4I
Balance of Facilities Process Description 4I-1

This page intentionally left blank.

4.0 PROCESS INFORMATION

4.1 Process Description

~~Mixed waste is managed by the~~The Hanford Tank Waste Treatment and Immobilization Plant (WTP) is a Treatment, Storage, and Disposal Facility, permitted as Operating Unit Group 10 under the Hanford Dangerous Waste Permit. The WTP includes six major facilities. These facilities are the Low-Activity Waste (LAW) Vitrification Facility, the High-Level Waste (HLW) Vitrification Facility, the Pretreatment Facility, the Analytical Laboratory (Lab), the Direct-Feed Low-Activity Waste Effluent Management Facility (EMF), and the Balance of Facilities (BOF).

The WTP manages mixed and dangerous wastes using ~~tanks~~tank systems, containment buildings, container storage areas, and miscellaneous unit systems. The floors and lower portions of the black cells and hot cell walls are lined with stainless steel for secondary containment. Black cells and hot cells ~~will be~~are equipped with an instrumented sump or sumps for leak detection. Liquids are removed from the black cell sumps by steam ejectors.

~~The pretreatment facility~~The WTP uses two separate waste process system configurations during mixed waste treatment operations. These configurations are the Baseline configuration, and the Direct Feed Low-Activity Waste (DFLAW) configuration.

Baseline Configuration

In the Baseline configuration, characterized low-activity waste and high-level waste are sent directly from the Hanford Tank Farms to the Pretreatment Facility. The mixed waste is pretreated in the Pretreatment Facility and sent to either the HLW Vitrification Facility or the LAW Vitrification Facility for processing, depending on the waste characterization. Underground waste transfer lines allow for the transfer of waste from the Hanford Tank Farms to the Pretreatment Facility, and to and from the LAW Vitrification Facility, HLW Vitrification Facility, Lab, and other Treatment, Storage, and Disposal (TSD) Facilities.

The Pretreatment Facility, in the Baseline configuration, uses tank systems, miscellaneous unit systems (defined in Operating Unit Group 10, Section III.10.G of this Permit), and containment buildings to prepare waste feed from the Hanford ~~Site double-shell tank (DST) system~~Tank Farms for vitrification.

The ~~low-activity waste (~~LAW~~) vitrification facility~~ Vitrification Facility uses miscellaneous treatment unit sub-systems and equipment (defined in Operating Unit Group 10, Section III.10.H and III.10.I of this Permit), tank systems, and containment buildings to vitrify LAW feed.

The ~~high-level waste (~~HLW~~) vitrification facility~~ Vitrification Facility uses miscellaneous treatment unit sub-systems and equipment (defined in Operating Unit Group 10, Section III.10.J and III.10.K of this Permit), tank systems, containment buildings, and container storage areas to vitrify HLW feed. ~~A tank system and a container storage area are used at the analytical laboratory (Lab). Container storage is used in the balance of facilities (BOF) for waste management activities. These waste management activities are discussed in the following sections and in Appendix 4D for the pretreatment facility, Appendix 4E for the LAW vitrification facility, Appendix 4F for the HLW vitrification facility, Appendix 4H for the Lab and Appendix 4I for the BOF. Appendix 4G is reserved for the direct feed low-activity waste (DFLAW) effluent management facility (EMF) and will be completed and submitted at a later date.~~

A tank system and a container storage area are used at the Lab. Container storage is used in the BOF for waste management activities.

DFLAW Configuration

In the DFLAW configuration, treated low-activity waste from the Hanford Tank Farms Low-Activity Waste Pretreatment System (LAWPS) is transferred to the LAW Vitrification Facility via an underground waste transfer line. The LAWPS is permitted as a separate Treatment, Storage, and Disposal Facility

under the Hanford Dangerous Waste Permit. The DFLAW configuration consists of the EMF, which includes the Direct Feed LAW EMF Process System (DEP), a dedicated ventilation system, and dedicated utilities, and underground waste transfer lines that allow for the transfer of waste to and from the LAW Vitrification Facility, Lab, and other TSD Facilities. The DFLAW configuration is independent of the Baseline configuration, and is only used prior to Pretreatment Facility startup and in the event of a prolonged Pretreatment Facility outage. The EMF uses tank systems and miscellaneous treatment unit sub-systems and equipment, defined in Operating Unit Group 10, Section III.10.M.

Waste Management

Waste management activities are discussed in the following sections and in Appendix 4D for the Pretreatment Facility, Appendix 4E for the LAW Vitrification Facility, Appendix 4F for the HLW Vitrification Facility, Appendix 4G for the EMF, Appendix 4H for the Lab, and Appendix 4I for the BOF.

Integrated Control Network

WTP operates an Integrated Control Network (ICN). The ICN provides a real-time control and data acquisition system platform responsible for the operation and control, and alarm management, of WTP processes during normal operating conditions. The ICN integrates the WTP control systems, such as the Process Control System (PCJ), the Mechanical Handling Control System (MHJ), and the Autosampling Control System (ASJ). The ICN includes network hardware devices (switches and routers), linking devices, computer servers, operating consoles and workstations, local operator interfaces, panels, enclosures, and an operating system software platform.

The WTP control systems serve as the controller logic that generate control outputs to the WTP processes, including, mechanical handling, autosampling, and ventilation. The control systems conduct various functions, including:

- Monitoring and/or controlling the electrical services
- Monitoring environmental and stack discharge equipment
- Controlling non-safety services and utilities.

The control systems send data to the ICN where it is passed to the plant information network. The plant information network is a network designed to store plant operating system data and information applicable to the DWP. The following are examples of the plant information network capabilities:

- Capture and store information related to DWP sample requests, sample statuses, and sample results.
- Capture and store information related to the tracking of dangerous/mixed waste containers throughout the facilities, from point of generation to off-site shipment; including containers located in permitted container storage areas, 90-day accumulation areas and satellite accumulation areas.

More information on the ICN and plant information network will be provided prior to the initial receipt of dangerous and/or mixed waste, as required in DWP permit condition III.10.D.10.c.v.

4.1.1 Process Overview

~~The~~In the DFLAW configuration, waste from the Hanford Tank Farms is pumped to the LAWPS where it is processed to meet contractual requirements for transfer of waste directly to the LAW Vitrification

Facility. The LAWPS Facility is permitted as a separate TSD Facility under the Hanford Dangerous Waste Permit. After sampling the waste stream, and confirmation by the WTP that it meets LAW waste acceptance criteria, it is then pumped directly to the LAW Vitrification Facility.

In the Baseline configuration, the WTP will store and treat waste feed from the Hanford ~~Site DST system~~Tank Farms in the ~~pretreatment facility.~~ Pretreatment Facility. The ~~pretreatment facility~~Pretreatment Facility will separate the waste into two feed streams for the LAW and HLW ~~melters.~~ Vitrification facilities. Feed from the ~~DST system~~Hanford Tank Farms is expected to be of four major waste feed types, or waste feed envelopes~~.~~ A, B, C and D. For the DFLAW configuration, waste feed will come from waste feed envelope E. These waste feed envelopes are described as follows:

- Envelope A.~~-~~ This waste feed envelope will contain cesium at concentrations high enough to warrant removal of these radionuclides during pretreatment, to ensure that the ~~immobilized low-activity waste~~Immobilized Low-Activity Waste (ILAW) glass will meet applicable requirements.
- Envelope B. ~~-~~This waste feed envelope will contain higher concentrations of cesium than envelope A. ~~-~~Cesium must be removed to comply with the ILAW specifications.~~-~~ This envelope may also contain concentrations of chlorine, chromium, fluorine, phosphates, and sulfates that are higher than those found in envelope A, which may limit the waste incorporation rate into the glass.
- Envelope C. ~~-~~This waste feed envelope will contain organic compounds containing complexed strontium and transuranics (TRU) that will require removal in a processing step unique to this waste envelope. ~~-~~As with envelopes A and B, cesium will also require removal in the pretreatment process to ensure that ILAW glass meets applicable requirements.
- Envelope D. ~~-~~HLW feed will be in the form of a slurry containing approximately 10 to 200~~-~~ grams of unwashed solids per liter. ~~-~~The liquid fraction of the slurry will be separated from the solids and classified as envelope~~-~~ A, B, or C waste. ~~-~~The solid fraction will be envelope~~-~~ D waste.
- Envelope E. Direct feed from LAWPS, with a nominal sodium concentration of 5 to 8 molar.

The WTP treatment processes are designed to immobilize the waste constituents in a glass matrix by vitrification and to treat the offgas from the processes to a level that protects human health and the environment.

Two similarly designed vitrification systems ~~will be~~are used in the WTP~~.~~ in the Baseline configuration. One system ~~will immobilize~~immobilizes the pretreated LAW feed and the second ~~will immobilize~~immobilizes the pretreated HLW feed. ~~-~~The dangerous waste constituents in the melter feed ~~will be~~is destroyed, removed, or immobilized in a glass matrix through the vitrification process.

The ILAW and ~~immobilized high-level waste~~Immobilized High-Level Waste (IHLW) produced by the WTP will be in the form of glass. The glass is packaged in stainless steel containers for ILAW and stainless steel canisters for IHLW and placed in permitted ~~treatment, storage, and/or disposal (TSD) facilities~~TSD Facilities.

Secondary waste streams (e.g., dangerous and mixed solid waste, ~~nonradioactive and nondangerous liquid effluents,~~ mixed waste and dangerous liquid effluents) ~~will be~~are characterized and recycled into the treatment process, transported to permitted TSD ~~facilities~~Facilities located on the Hanford Site, or transported off-site, as appropriate.

Nonradioactive dangerous waste will also be generated by laboratory and maintenance activities. ~~-~~This waste will be managed at the WTP until it can be transferred to an off-site TSD unit.

There are ~~four~~six primary components of the WTP: ~~pretreatment~~Pretreatment Facility, LAW ~~vitrification~~Vitrification Facility, HLW ~~vitrification, and~~Vitrification Facility, EMF, the ~~analytical laboratory. In addition, each of these waste treatment processes is supported by~~Lab, and the supporting BOF systems and utilities ~~known as the balance of facilities.~~. The following discussion presents an overview of these waste treatment processes and ~~balance of facilities~~BOF systems at the WTP. Figure 4A-1 in Appendix 4A presents a simplified process flow diagram of the WTP treatment processes.

Pretreatment

~~The~~In the Baseline configuration, waste feed ~~will be~~is stored and subsequently treated in the ~~pretreatment facility~~Pretreatment Facility prior to vitrification. The processes in the ~~pretreatment facility will condition~~Pretreatment Facility conditions the waste feed and ~~remove~~removes cesium, strontium, TRU compounds, and entrained solids. The waste feed ~~will~~is also ~~be~~ processed through ultrafiltration to separate the solids.

There ~~will be three~~are four types of waste management units in the ~~pretreatment facility, as follows~~Pretreatment Facility:

- Container storage areas
- Tank systems
- Containment buildings
- Miscellaneous unit systems

The structure of the ~~pretreatment facility~~Pretreatment Facility is supported by a reinforced concrete foundation. The superstructure ~~will be~~is made of structural steelwork with a metal roof. Typically, the process cells within the ~~pretreatment facility will be~~Pretreatment Facility are constructed of reinforced concrete. Secondary containment is provided as required for tank systems and miscellaneous unit systems managing dangerous or mixed waste. Secondary containment consists of either stainless steel ~~liner~~liners or special protective ~~coating.~~ coatings. Table 4D-3 in Appendix 4D provides information on secondary containment. Figure 4A-2 and 4A-~~02A~~2A in Appendix 4A present simplified process flow diagrams of the pretreatment processes.

LAW Vitrification Facility

The LAW ~~v~~Vitrification ~~facility~~Facility will house the vitrification systems for production of the ILAW. ~~Three~~Four types of waste management units will be located in the LAW ~~vitrification facility~~Vitrification Facility, as follows:

- Container Storage Areas
- Tank systems
- Containment buildings
- Miscellaneous treatment unit sub-systems and equipment

The LAW ~~vitrification facility will be~~Vitrification Facility is constructed of reinforced concrete and structural steelwork. The below-grade portion of the building structure is made of reinforced concrete, and the superstructure ~~will be~~is made of reinforced concrete and structural steelwork with a metal roof. The ~~facility~~LAW Vitrification Facility structure ~~will be~~is supported by a reinforced concrete mat foundation.

Secondary containment is provided as required for tank systems and miscellaneous unit sub-systems and equipment managing dangerous or mixed waste. Secondary containment consists of either stainless steel ~~liner~~liners or protective ~~coating.~~ coatings. Table 4E-3 in Appendix 4E provides information on

secondary containment. Figure 4A-3 in Appendix 4A presents a simplified process flow diagram of the LAW ~~vitrification~~Vitrification Facility treatment processes.

HLW Vitrification Facility

The HLW ~~vitrification facility will house~~Vitrification Facility houses the vitrification systems for producing IHLW. Four types of waste management units ~~will be~~are located in the HLW ~~vitrification facility~~Vitrification Facility, as follows:

- Container storage areas
- Tank systems
- Containment buildings
- Miscellaneous treatment sub-systems and equipment

The HLW ~~vitrification facility will be~~Vitrification Facility is constructed of reinforced concrete and structural steelwork. The lower elevations of the building structure are reinforced concrete construction, and the upper elevations made of structural steelwork with a metal roof. The ~~facility~~HLW Vitrification Facility structure ~~will be~~is supported by a reinforced concrete mat foundation. Secondary containment is provided as required for tank systems and miscellaneous unit sub-systems and equipment managing dangerous or mixed waste. Secondary containment consists of either stainless steel liner or protective coating. Table 4F-3 in Appendix 4F provides information on secondary containment. Figure 4A-4 in Appendix 4A presents a simplified process flow diagram of the HLW ~~vitrification~~Vitrification Facility treatment processes.

Direct Feed Low-Activity Waste Effluent Management Facility (EMF)

The EMF consists of four primary buildings: the LAW Effluent Process Building, the LAW Effluent Drain Tank Building, the LAW Effluent Electrical Building, and the LAW Effluent Utility Building. The EMF contains an evaporator system, nine major process vessels, two supporting reagent product storage tanks, HVAC equipment, and electrical utilities. The buildings are constructed of reinforced concrete and structural steelwork with a metal roof. The EMF structures are supported by a reinforced concrete mat foundation.

The EMF is designed with a minimum of a 48-hour effluent storage capacity, and includes underground waste transfer lines to transfer waste to and from the LAW Vitrification Facility, Lab, and other TSD Facilities. Secondary wastes generated by the EMF are managed as described in Appendix 4G.1

There are two types of waste management units in the EMF:

- Tank Systems
- Miscellaneous unit systems,

Analytical Laboratory

~~The analytical laboratory will house~~The Lab houses the hot cells, laboratories, and systems for analyzing process samples and managing regulatory compliance samples. Two types of waste management units ~~will be~~are located in the ~~analytical laboratory, as follows~~Lab:

- Container storage areas
- Tank systems

The ~~analytical laboratory will be~~Lab is constructed of reinforced concrete, structural steelwork, and a metal roof. The below-grade portions of the building structure ~~will be~~are constructed of reinforced concrete. The ~~analytical laboratory~~Lab structure will be supported by a reinforced concrete mat

foundation. Secondary containment is provided as required for tank systems managing dangerous or mixed waste. Secondary containment consists of either stainless steel liner or protective coating. Table 4H-2 in Appendix 4H provides information on secondary containment.

Balance of Facilities

The ~~balance of facilities~~BOF includes support systems and utilities required for the waste treatment processes within the ~~pretreatment~~Pretreatment Facility, LAW ~~vitrification~~Vitrification Facility, HLW ~~vitrification~~Vitrification Facility, and the ~~analytical laboratory. The balance of facilities~~Lab. BOF support systems and utilities include, but are not limited to, heating and cooling, process steam, process water, chilled water, primary and secondary power supplies, and compressed air. The ~~balance of facilities~~BOF also includes the ~~glass former reagent~~Glass Former Reagent system (GFR) that supplies glass former reagents to the LAW and HLW ~~vitrification~~Vitrification facilities. Regulated waste management units within the ~~balance of facilities~~BOF include the HLW ~~failed melter storage facility~~Failed Melter Storage Facility and the ~~nonradioactive dangerous waste storage area~~Nonradioactive Dangerous Waste Storage Area.

4.2 Tank Systems

This section contains descriptive information for each tank system used for managing mixed waste. The term "tank systems" refers to mixed waste storage or treatment tanks, including primary containment sumps, and their associated ancillary equipment and containment systems. Figures and permit drawings depicting design features of tank systems are found in DWP Operating Unit Group 10.

The following text uses the terms "vessel" and "tank". The term "vessel" is an engineering term and denotes more robust construction than a typical mixed waste storage or treatment tank. The term "vessel" is included due to the use of the term in the American Society of Mechanical Engineers (ASME) codes and specifications~~, which will be~~ that are followed for most tank construction at the WTP.

4.2.1 Design, Installation, and Assessment of Tank Systems

This section describes the attributes of tank systems ~~that will contain~~containing mixed waste. Tanks and ancillary equipment containing only additives or reagents, such as glass-forming chemicals, precipitation reagents, or unused resin, are not regulated under the Resource Conservation and Recovery Act (RCRA) or the Washington State Dangerous Waste Program, and are therefore not included.

Tank systems ~~that will contain~~containing mixed waste are designed to comply with worst-case scenarios, such as extreme pH, temperature, and pressure conditions. The WTP ~~will be~~is entirely new construction, and there ~~will be~~are no "existing tanks" in the plant.

Tank systems, with the exception of the two outside tanks at the ~~pretreatment facility, will be~~Pretreatment Facility and the eight outside vessels at the EMF, are located indoors and within process cells, process rooms, or caves with controlled access.

4.2.1.1 Design Requirements

Tanks

Most of the tanks that come in contact with the waste ~~will be~~are operated under atmospheric pressure conditions at the WTP. The mixed waste tanks ~~will be~~are designed, at a minimum, to *Boiler and Pressure Vessel Code* (ASME 2000), the American Petroleum Institute (API) codes, or other appropriate design codes. Tank integrity ~~will be~~is reinforced by additional requirements of the tank group and seismic category assignment to each tank.

The vessels ~~will be~~are designed for seismic loading in accordance with the *Uniform Building Code* (UBC) standard for Zone 2B (UBC 1997).

The codes and standards that ~~will be~~are followed for design, construction, and inspection for the tanks are identified below, as applicable:

- ANSI American National Standards Institute
- API American Petroleum Institute
- ASME American Society of Mechanical Engineers
- ASNT American Society of Non-Destructive Testing
- ASTM American Society for Testing and Materials
- EPA US Environmental Protection Agency
- NACE National Association of Corrosion Engineers
- NBBPVI The National Board of Boilers and Pressure Vessel Inspectors
- OSHA Occupational Safety and Health Administration
- PFI Pipe Fabrication Institute
- UBC Uniform Building Code
- WRC Welding Research Council

Permit documents describing tank design requirements are located in DWP Operating Unit Group 10, Appendix 7.7:

- Specification for Pressure Vessel Design and Fabrication, 24590-WTP-3PS-MV00-T0001
- Seismic Qualification Criteria for Pressure Vessels, 24590-WTP-3PS-MV00-T0002
- Specification for Pressure Vessel Fatigue Analysis, 24590-WTP-3PS-MV00-T0003

Piping and Pipe Support Design

The design code of the WTP piping and pipe supports is ASME B31.3 Code (ASME 1996), as well as the DOE seismic requirements. In compliance with DOE seismic requirements (DOE 1996), response spectrum method or UBC (UBC 1997) static method is used for the seismic analysis of the piping systems.

Additional information for piping and pipe support design is included in the following documents, which are included in DWP Operating Unit Group 10 Appendices as indicated:

- *Material for Ancillary Equipment*, 24590-WTP-PER-M-02-002 (Appendix 7.9)
- *Piping Material Class Description*, 24590-WTP-PER-PL-02-001 (Appendix 7.2~~4~~)
- *Ancillary Equipment Pipe Support Design*, 24590-WTP-PER-PS-02-001 (Appendix 7.5)

4.2.1.2 Physical Information for Tanks

Tables in Appendices 4D, 4E, 4F, 4G, and 4H list current tank design information (capacity, materials of construction, and dimensions). The tank systems are grouped by plant and process system.

Tank operation is generally automated. However, operator intervention can be used when human decisions or approval are required for initiation and termination of a process operation. Descriptions of tank system operation for major WTP process systems are identified in Appendices 4D, 4E, 4F, 4G, and 4H.

4.2.2 Ancillary Equipment Requirements

Information concerning ancillary equipment is provided in the following subsections.

4.2.2.1 Transfer or Pressure Control Devices

Several fluid transfer devices ~~will be~~are used in the WTP. ~~-~~These devices include mechanical pumps, reverse flow diverters, and steam ejectors.~~-~~ Breakpots and seal pots, although not fluid transfer devices, are an important component of vessel operations. ~~-~~These components are discussed in the following sections.

Mechanical Pumps

Mechanical pumps ~~will be~~are used for operations that require high-flow pumps (such as through the evaporator circuits) or high-pressure head pumps (such as for pumping a waste stream through ultrafiltration circuits). ~~-~~Mechanical pumps ~~will be~~are located in process cells, process rooms, or caves. ~~-~~In general, mechanical pumps ~~will be~~are repaired in place, or removed to a maintenance area. ~~-~~However, remotely maintained pumps ~~will be~~are used in areas where maintenance activities would result in a significant radiation dose to the operators.

For normal process operating sequences, mechanical pumps and associated valves ~~will be~~are controlled by the process control system. ~~-~~In systems where off-normal conditions ~~would~~ require pump shutdown, the design ~~will include~~includes an alarm mechanism that ~~will~~ also ~~trip~~trips the transfer device.~~-~~ The pump system is designed to allow for the drainage of liquid from the pump, and for the introduction of flush liquids at the end of transfers to reduce residual contamination.

Reverse Flow Diverters

Reverse flow diverters ~~will~~ provide for the maintenance-free pulsed or metered transfer of liquids or slurries throughout the treatment process. ~~-~~A reverse flow diverter does not need to be fully submerged in order to remove the contents of a vessel, and it maintains a small and predictable volume of tank contents following its use. ~~-~~Operation of the reverse flow diverter is cyclical, following timed phases: suction phase, drive phase, and blowdown. ~~-~~The following paragraphs describe a typical reverse flow diverter system arrangement.

Suction phase: In the suction phase, the secondary automatic valve A is open, admitting air to the suction jet pump. ~~-~~Valve B is shut and liquid is drawn from the supply tank through the reverse flow diverter and into the charge vessel. ~~-~~The suction ejector is designed so that it cannot produce a vacuum capable of lifting liquid higher than a certain valve known as the “suction lift”. ~~-~~After a short time, the liquid reaches this “suction lift” height and stops, then valve A is shut.

Drive phase: When valve A is shut, valve B is opened, admitting air to the drive nozzle. ~~-~~Air passes through the nozzle and pressurizes the charge vessel. ~~-~~Liquid is forced across the reverse flow diverter and into the delivery pipe.~~-~~ The delivery pipe is quickly filled with liquid that flows into the delivery vessel.

Blowdown phase: When the charge vessel is nearly empty, valve B is shut; no air is supplied to either jet pump. ~~-~~The compressed air in the charge vessel passes back through the paired jet pumps, down the vent pipe, and into vessel vent system.

Shortly after blowdown begins, the pressure in the charge vessel falls below the delivery head, and the flow of liquid into the delivery vessel is halted.

The liquid in the delivery vessel then falls back down the pipe, across the reverse flow diverter, and into the charge vessel. ~~-~~After a short time, the pressure in the charge vessel falls to zero (gauge).~~-~~ The cycle is now complete.

Steam Ejectors

Steam ejectors are used to transfer process liquids, or to reduce the operating pressure of a system by gas removal. They empty liquid from vessels by means of suction lift, using a simple control system.

An automated control valve supplies high-pressure steam to the steam ejector. This steam accelerates through a nozzle, creating a differential pressure along a submerged suction leg within the vessel. The pressure than forces the liquid up the suction pipe. This effect is known as *striking*. The steam then conveys the liquid to the destination vessel, normally via a breakpot. Control is established using liquid level instrumentation in the vessel being emptied, and using a temperature indicator, such as a thermocouple, within the breakpot.

Seal Pots

A seal pot is a type of hydraulic seal. A hydraulic seal is used primarily to maintain a separation between vessel vent or offgas systems for feed and receipt vessels. This separation is necessary to prevent migration of airborne contamination between the vessels. Without the seal, airflow could occur due to the different pressures in the vent systems. The seal is a slug of liquid in the interconnecting pipe work that remains after each liquid transfer is completed, blocking airflow between vessels.

The seal can be provided by constructing a simple "U" shape in the piping. Different piping arrangements are used for different purposes. A seal pot is a small vessel with one (inlet or outlet) pipe submerged in the liquid slug in the lower part of the pot, while the other pipe terminates in the top of the pot, above the static liquid level. The pot may be provided with a level indicator or alarm, if necessary, to ensure adequate liquid level. Periodic liquid additions may be needed to maintain the seal, especially if the pipeline is infrequently used.

Breakpots

The main function of the breakpot is to reduce the amount of mixed waste material entrained into the vessel ventilation system. Breakpots are provided on transfer lines that use steam ejectors for moving liquids by pressure flow. These types of transfers create the potential for air entrainment of mixed waste contamination. Breakpots function to convert steam from pressure flow to liquid gravity flow, thereby reducing both the effluent loading on the downstream vessel ventilation treatment system and the mixed waste contamination levels in the vessel vent ductwork. Breakpots also serve a secondary purpose by providing a siphon break for other transfer systems where siphoning could occur.

Breakpots are typically placed at a high point in the discharge line from the steam ejector. Liquid ~~will be~~is pumped into the breakpot through an inlet nozzle in its wall. The incoming liquid ~~will be~~is directed towards a baffle. Within the baffle, noncondensed steam and gases ~~will~~ disengage. The breakpot ~~will be~~is self-draining; the liquid ~~will drain~~drains through the breakpot discharge pipe to the destination vessel.

~~Above the inlet nozzle(s) will be a~~A packed bed where disentrainment of the gas stream ~~will occur.~~ occurs is located above the inlet nozzle(s). The exiting gas from the packed section ~~will pass~~passes into the vessel ventilation system. The packed bed can be washed periodically using a wash ring permanently installed above the packed bed.

4.2.2.2 Bulges

Bulges ~~are intended to~~ allow hands-on maintenance of equipment after process fluids are flushed from the bulge piping and components. Bulges provide shielding to personnel during process operation and allow vulnerable or failure prone components to be located outside the process environment. The cell wall provides shielding between the cell and the bulge interior. The bulge includes shielding and contamination control as needed, depending on the process fluid within the bulge piping.

A typical bulge consists of a metal frame attached to the outside wall of a process cell; the frame is used to support the piping and components as well as the shielding plates (usually steel), which are bolted to the frame. Bulges provide secondary containment for DWP ancillary equipment inside the bulge.

The ancillary equipment located inside the bulges ~~will be~~are provided with leak detection or the bulge is provided with a drain line that flows to a sump equipped with leak detection. Leak detection can be provided internal to the bulge or in the sump associated with bulge drain line.

There are two classifications of bulges used at the WTP. One is a "process" bulge; the other is a "service" bulge. The process bulge contains valves, pumps, piping, etc. The service bulge contains valves used to transfer reagents, steam, etc., to the in-cell process equipment. The design of the two bulges is similar.

Bulges are equipped with several wash systems, facilitating washing both internal and external piping, components, and bulge confinement surfaces. Decontamination of the equipment internals and associated piping is achieved by externally connecting a flushing system located on the outside of the bulge. Wash fluids could be water or more aggressive media such as nitric acid, provided compatibility with the bulge materials is ensured.

Additional information on process bulges may be found in *Process Bulge Design and Fabrication* (24590-WTP-3PS-MX00-T0~~P~~001), located in DWP Operating Unit Group 10, Appendix 7.7 and Appendix 4A, Figure 4A-127.

4.2.2.3 Description of WTP Piping System

Detailed information on piping is included in *Piping Material Class Description* (24590-WTP-PER-PL-02-001), located in DWP Operating Unit Group 10, Appendix 7.2~~4~~.

Interplant Piping Transfer Lines

~~Waste~~ In both the Baseline and DFLAW configurations, waste feed from the ~~DST system~~Hanford Tank Farms and the LAWPS will be transported to the WTP via ~~the~~underground waste transfer lines.

The waste feed transfer lines ~~will be~~are double-walled pipe. The inner pipe ~~will be~~is constructed of stainless steel, while the outer secondary containment pipe ~~will be~~is constructed of carbon steel. The carbon steel outer pipe ~~will be~~is coated with a ~~corrosion-resistant material.~~ fusion bonded epoxy coating. In addition, the coated outer pipe for the waste transfer lines ~~from the DST to the pretreatment facility will be~~are surrounded by an injected closed-cell polyurethane foam insulation and a ~~seamless~~ high-density polyethylene outer ~~shell.~~ jacket. This extra layer of protective material ~~will isolate~~isolates the waste transfer lines from soil. ~~The waste transfer lines between the pretreatment facility and the other WTP process plants will not have this extra barrier from the soil, but will be cathodically protected as described later in this section.~~

~~A leak detection system will be provided for the entire length of the waste transfer line. Pumping will be terminated, and reception of waste feed from the DST system unit will stop, when a leak is identified by the leak detection system.~~

The inner pipe ~~will be~~is supported by guides, saddles, support keys, or anchors within the outer pipe. The inner pipe ~~will transport~~transports waste and ~~maintain~~maintains the pressure boundary, while the outer pipe ~~will provide~~provides secondary containment for the inner pipe. The piping system ~~will be~~is buried under a minimum depth of soil for radiation shielding. The minimum depth of soil ~~will be~~was finalized at the detail design phase and will not be less than the 2 feet (ft) freeze depth. A heat trace system is not required for pipes buried below freeze depth.

~~The piping system will have a continuous slope down toward the pretreatment facility. Released liquids resulting from leaks to the outer pipe can~~In the baseline configuration, the waste transfer lines between

the Pretreatment Facility and the other WTP process plants do not have this extra barrier from the soil, but are cathodically protected as described later in this section. In the DFLAW configuration, the new effluent or process waste transfer lines between the LAWPS and the EMF, starting at the DOE interface point at the WTP property boundary and ending at the LAW, and from the EMF back to the Hanford Tank Farms ending at DOE interface point at the WTP property boundary, utilize the HDPE jacketed design to isolate the transfer lines from the soil environment. Similarly, the transfer lines between the LAW and EMF, the Lab and EMF, and the EMF to the intersection of the existing transfer line between the Pretreatment Facility and the LERF/ETF interface point, utilize the HDPE jacketed design. In the DFLAW configuration, the cathodically protected intra-facility piping system between the Pretreatment Facility and the other WTP facilities will be isolated, and not used. However, the cathodic protection system will remain operational even though wastes are not being managed in these process transfer lines.

A leak detection system is provided for each of the underground waste transfer lines. A leak detection alarm will send a signal to stop waste transfer pumps and terminate the transfer of waste feed.

The underground piping system has a continuous slope down toward the Pretreatment Facility from the Hanford Tank Farms in the Baseline configuration. In the DFLAW configuration all transfer lines slope to Leak Detection Boxes (LDBs) located in the LAW Effluent Drain Tank Building. The exception is the LERF/ETF transfer line LDBs which are located at the LERF/ETF interface point on the WTP property line. Released liquids resulting from leaks to the outer pipe will be removed as required by WAC 173-303-640(4)(b). The piping system ~~will be~~is designed to allow water flushing to occur ~~in both directions~~.

Liquid Effluent Transfer Lines

~~Liquid~~In the Baseline configuration, liquid effluent generated at the WTP ~~will be~~is routed to the ~~pretreatment facility~~ Pretreatment Facility for recycling through the WTP ~~or disposal~~and then transferred to the Liquid Effluent Retention Facility (LERF~~) and~~)/ Effluent Treatment Facility (ETF~~).~~) for treatment and disposal.

~~An~~To support the Baseline configuration two HDPE jacketed waste effluent ~~line will be~~lines are routed from the ~~pretreatment facility~~Pretreatment Facility to the LERF ~~and ETF. This~~/ ETF interface point located northwest of the EMF along the WTP property line. In the DFLAW configuration two HDPE transfer lines intersect the existing LERF/ETF transfer lines between the Pretreatment Facility and the interface point. In this configuration the transfer line ~~is a buried pipe, constructed of materials that are compatible with the waste, under a minimum 2 ft of soil serving as freeze protection.~~ between the Pretreatment Facility and the line intersection is isolated to prevent fluids from flowing to the Pretreatment Facility. The pipes ~~will~~ have a continuous downwards slope towards the LERF ~~and ETF, and will be designed to maintain structural integrity.~~ /ETF., A leak detection system ~~will be~~is provided for the LERF/ETF waste transfer lines at the LERF/ETF interface point.

Intraplant Piping

~~Within~~ Pipelines within the plants~~, the pipelines~~ associated with the tank ~~system will be~~systems located in process cells, black cells, bulges and pipe and pump pits, are typically single-walled~~.~~ pipelines. Secondary containment ~~will be~~is provided ~~for piping within the plants by double-walled pipe or~~by partially lined process cells, process rooms, or caves. ~~If needed, other~~Secondary containment ~~methods such as a bulge~~to support unique processes is provided by pump and pipe pits, melter encasement assembly areas, and bulges or concrete ducts with liners ~~will be provided~~ at appropriate locations. The bulge or concrete ducts ~~will be~~are provided with a low point which ~~will drain~~drains to process cells, process rooms, or caves. The leak detection equipment located within the process cells, process rooms, and caves ~~will warn~~provides warning of a piping leak through leak detection alarms.

Piping between plants and the two outdoor tanks at the ~~pretreatment facility will be double-walled~~Pretreatment Facility, and the eight EMF outdoor vessels, are double-walled, FBE-coated, insulated, HDPE-jacketed lines. The majority of the transfer lines are located below grade, and below the freeze line~~, similar to the waste transfer line~~. The above ground segment of the lines to the associated vessels are insulated and heat traced to prevent freezing.

Cathodic Protection

An impressed current cathodic protection system ~~will be~~is used in the Baseline configuration for eliminating or mitigating corrosion on underground piping. ~~-~~The cathodic protection system ~~will maintain~~maintains a negative ~~polarized~~pipe to soil potential ~~between~~on the protected pipe ~~and~~relative to a saturated copper/copper sulfate reference electrode.

The impressed current cathodic protection system uses direct current provided by a rectifier that is powered from the plant's normal 480 Vac power system. ~~-~~The direct current from the rectifier is connected across the buried anode wire and the protected pipe. ~~-~~The current flows from the anode wire, which is positive, through the electrolyte, to the protected pipe, which is negative, and back to the rectifier completing the electrical circuit.

An annual survey, recommended by NACE International (formerly the National Association of Corrosion Engineers), ~~will be~~is performed on the ~~overall~~ system~~.~~ provided with cathodic protection. Test stations ~~will be~~are provided to permit potential measurements. ~~-~~Additional information on inspections is provided in Operating Unit Group 10, Chapter ~~6.0~~6A.

The following waste transfer lines are provided with cathodic protection at the WTP.~~-~~ The waste transfer lines are double encased and constructed of materials that are compatible with the waste:

- Mixed waste transfer lines between the Pretreatment Facility and the HLW Vitrification Facility
- Mixed waste transfer lines between the Pretreatment Facility and the LAW Vitrification Facility
- Mixed waste transfer line between the Analytical Laboratory and the Pretreatment Facility

Corrosion Protection

The following WTP waste transfer and effluent transfer lines that utilize FBE, thermal insulation, and an HPDE jacket, are isolated from soil moisture with an external ~~waterproof~~water resistant barrier to provide corrosion protection:

- DOE waste feed pipelines from the Hanford Tank Farm interface point to the ~~PTF~~Pretreatment Facility
- Radioactive/dangerous waste effluent transfer lines from the ~~PTF~~Pretreatment Facility to the ETF/LERF interface point
- Mixed waste transfer lines from the LAWPS to the EMF starting at the DOE interface point at the WTP property boundary and ending at the LAW Vitrification Facility
- Mixed waste transfer lines from the EMF back to the Hanford Tank Farms beginning at EMF and ending at the DOE interface point at the WTP property boundary
- Mixed waste transfer lines from the LAW Vitrification Facility to the EMF
- Mixed waste transfer lines from the Lab to the EMF
- Mixed waste transfer lines from the EMF to an intersection point on the existing transfer line from the Pretreatment Facility to the LERF/ETF interface point at the WTP property boundary

The incoming DOE waste feed pipelines that interface with the WTP pipelines are intentionally not cathodically protected. ~~-~~Consistent with the existing Hanford Tank Farm waste transfer design, transfer lines from the WTP interface point, the Waste Feed Receipt Process (FRP) transfer lines and the LERF/ETF effluent coaxial transfer lines are furnished with additional corrosion protection by the addition of an external ~~waterproof~~water resistant barrier.~~-~~ This barrier isolates the lines from moisture in the surrounding soils and provides corrosion protection in lieu of cathodic protection.

The barrier consists of a 2~~-~~-inch layer of sprayed or injected closed-cell polyurethane foam with an external jacket of extruded ~~high density polyethylene~~High Density Polyethylene (HDPE) jacket with a minimum thickness of ~~150~~140 mils.~~-~~ This barrier is located over the fusion bonded epoxy coated carbon steel outer encasement pipe which provides secondary containment for the inner stainless steel process line.

The incoming waste transfer lines are also bonded at the crossing of the plant service air piping between the ~~PTF~~ Pretreatment Facility and the HLW Vitrification Facility on the opposite end (which is ~~perpendicular~~cathodically protected piping). ~~The waste feed lines, therefore, may receive some amount of protective cathodic protection current in the area where they are bonded.~~ This area is defined as the "zone of influence." ~~-~~Bonding is provided to minimize stray electrical currents that may occur in the zone of influence ~~and thereby eliminate the possible corrosion process. The waste feed lines are also provided with the test stations at both ends to allow potential tests that will indicate if corrosion is a concern~~.

4.2.2.4 Description of Foundations

Tank systems containing mixed waste ~~will be~~are located indoors in process cells or caves, which ~~will be~~are an integral ~~parts~~part of the ~~pretreatment facility, analytical laboratory~~Pretreatment Facility, Lab, the LAW ~~vitrification facility~~Vitrification Facility, HLW Vitrification Facility, and the ~~HLW vitrification facility with the~~EMF. The exception ~~of~~being two outdoor Pretreatment Facility tanks~~.~~ and eight outdoor EMF vessels. Therefore, the design requirements of the tank systems ~~will be~~are met by the structural integrity of the plants.~~-~~ WTP compliance with UBC seismic design requirements, found in DWP Operating Unit Group 10, Supplement 1, provides the seismic design requirements for the WTP. ~~-~~The outdoor tanks ~~will be~~and vessels are located outside of the ~~pretreatment facility~~Pretreatment Facility and EMF on ~~a~~ protectively-coated concrete ~~pad~~pads and concrete ~~berm.~~ berms. The concrete ~~pad~~pads for these tanks ~~will be~~are sufficient to support the tanks and vessels.

Additional information on the design criteria, load definitions, load combinations, and methodology for the structural design and analysis may be found in *Secondary Containment Design* (24590-WTP-PER-CSA-02-001), located in DWP Operating Unit Group 10, Appendix 7.5.

4.2.3 Integrity Assessments

~~A written assessment~~Written assessments of the adequacy of the design of tank systems and miscellaneous treatment systems ~~will be~~are prepared on a system-by-system basis.~~-~~ Separate reports are prepared for tanks, tank system ancillary equipment, and associated secondary containment systems. Each assessment ~~will be~~is reviewed and certified by an independent, qualified, registered professional engineer to attest that the tank and miscellaneous treatment systems are adequately designed for managing dangerous waste. ~~-~~Each assessment ~~will include~~includes an evaluation of the foundation, structural support, seams, connections, pressure controls, compatibility of the waste with the materials of construction, and corrosion controls for each mixed waste management system, as appropriate. ~~Assessment~~Integrity assessment reports are located in DWP Operating Unit Group 10, Appendix 8.11 for the ~~pretreatment facility~~Pretreatment Facility, Appendix 9.11 for the LAW ~~vitrification facility~~Vitrification Facility, Appendix 10.11 for the HLW ~~vitrification facility, and~~Vitrification Facility, Appendix 11.11 for the Lab, and Appendix 13.11 for the EMF.

4.2.4 Additional Requirements for Existing Tanks

Tanks and vessels ~~to be~~that are permitted in the WTP ~~will be~~are newly constructed; pre-existing tanks will not be used. ~~-~~Therefore, the requirements of this section do not apply.

4.2.5 Additional Requirements for New Tanks

~~Installation of tank systems will be~~Tank system installation is performed in a manner designed to prevent damage to the tank system.~~-~~ The WTP uses an independent, qualified installation inspector, or an independent qualified registered professional engineer to perform tank system installation inspections. Inspection activities ~~will~~ include testing tanks for tightness, verifying protection of ancillary equipment against physical damage and stress, and evaluating evidence of corrosion. ~~-~~The inspections ~~will~~ document weld breaks, punctures, coating scrapes, cracks, corrosion, and other structural defects. ~~-~~Installation inspections ~~will~~ conform to permit requirements and consensus-recognized standards. ~~-~~Inspection findings and corrective actions, as appropriate, ~~will be~~are documented in post-inspection reports.

Additional information describing the installation of tank systems and associated inspections are provided in *Installation of Tank Systems and Miscellaneous Unit Systems*, 24590-WTP-PER-CON-02-001.

4.2.5.1 Additional Requirements for New On-Ground or Underground Tanks

The majority of the tanks and vessels to be constructed in the WTP ~~will be~~are located within the ~~pretreatment facility~~Pretreatment Facility, the ~~analytical laboratory~~Lab, the LAW ~~vitrification plant~~Vitrification Facility, and the HLW ~~vitrification facility.~~ Vitrification Facility. Therefore, the requirements of this section do not apply to the indoor tanks.

The two outdoor Process Condensate Tanks located at the ~~pretreatment facility~~Pretreatment Facility (RLD-TK-00006A/B~~) will be~~), and the eight outdoor vessels at the EMF (DEP-VSL-00002, DEP-VSL-00003A/3B/3C, DEP-VSL-00004A/4B, and DEP-VSL-00005A/5B), are located within a bermed and lined secondary containment system and ~~will~~are not be in direct contact with soil. ~~-~~The design of the outdoor tanks' concrete pad ~~will address~~addresses backfill, soil saturation, seismic forces, and freeze thaw effects. ~~-~~A portion of the ancillary piping for the unit ~~will be~~is in contact with the soil, and the effects of corrosion on the piping ~~will be~~are addressed in the final design.

4.2.6 Secondary Containment and Release Detection for Tank Systems

This section provides information about the secondary containment for tank systems that ~~will~~ contain mixed waste in the WTP.~~-~~ Descriptions of equipment and procedures used for detecting and managing releases or spills from tank systems are also provided.

A number of documents are provided in appendices to DWP Operating Unit Group 10 that provide detailed information regarding the design of the secondary containment system. ~~-~~These documents include the following:

- Secondary Containment Design, 24590-WTP-PER-CSA-02-001, located in Appendix 7.5
- Material Selection for Building Secondary Containment/Leak Detection, 24590-WTP-PER-M-02-001, located in Appendix 7.9
- Leak Detection in Secondary Containment Systems, 24590-WTP-PER-J-02-002, located in Appendix 7.5
- Flooding Volume for PT Facility, 24590-PTF-PER-M-02-005, located in Appendix 8.8
- Flooding Volume for 28 Ft Level in PT Facility, 24590-PTF-PER-M-03-001, located in Appendix 8.8

- Flooding Volume for 56 Ft Level in PT Facility, 24590-PTF-PER-M-04-001, located in Appendix 8.8
- Flooding Volume for 77 Ft Level in PT Facility, 24590-PTF-PER-M-04-0003, located in Appendix 8.8
- Flooding Volume for Room P-0150 in the PT Facility, 24590-PTF-PER-M-04-0008, located in Appendix 8.8.
- Flooding Volume for Room P-0119 in the PT Facility, 24590-PTF-PER-M-04-0005, located in Appendix 8.8.
- Flooding Volume for Room P-0123A in the PT Facility, 24590-PTF-PER-M-04-0007, located in Appendix 8.8.
- Dangerous Waste Permit (DWP) Liner Heights in the LAW Facility, 24590-LAW-PER-M-02-002, located in Appendix 9.8
- Flooding Volume for the HLW Facility, 24590-HLW-PER-M-02-003, located in Appendix 10.8
- Dangerous Waste Permit Liner Heights in the LAB Facility, 24590-LAB-PER-M-02-001, located in Appendix 11.8
- Leak Detection Capability in the Pretreatment Facility, 24590-PTF-PER-M-04-0010, located in Appendix 8.18
- Waste Removal Capability for the Pretreatment Facility, 24590-PTF-PER-M-04-0011, located in Appendix 8.18
- Leak Detection Capability in the Low Activity Waste Facility, 24590-LAW-PER-M-05-002, located in Appendix 9.18
- Waste Removal Capability for LAW Vitrification, 24590-LAW-PER-M-05-001, located in Appendix 9.18
- Leak Detection Capability in the HLW Facility, 24590-HLW-PER-M-04-002, located in Appendix 10.18
- HLW Facility Waste Removal Capability, 24590-HLW-PER-M-04-0001, located in Appendix 10.18
- Lab Minimum Leak Rate Detection Capabilities for Leak Detection Boxes, Cell Sumps, and Pit Sumps, 24590-LAB-PER-M-04-0001, located in Appendix 11.18
- LAB Waste Removal Capability for the Effluent Vessels Cells, 24590-LAB-PER-M-04-0002, located in Appendix 11.18
- System Logic Description for the Direct Feed LAW Effluent Management Facility Process System (DEP), 24590-BOF-PER-J-16-001, located in Appendix 13.13
- Leak Detection Capability for EMF Facility, 24590-BOF-PER-M-16-001, located in Appendix 13.18
- Waste Removal Capacity for the Direct Feed LAW Effluent Management Facility (EMF), 24590-BPF-PER-M-16-002, located in Appendix 13.18
- Dangerous Waste Permit (DWP) Liner Heights in the Effluent Management Facility (EMF), 24590-BOF-PER-M-16-003, located in Appendix 13.8

4.2.6.1 Secondary Containment System Requirements

Most of the tank systems containing mixed waste ~~will be~~are located within the plants, although two tanks ~~will be~~are located outside the ~~pretreatment facility.~~ Pretreatment Facility, and eight vessels are located outside of the EMF. Tank systems containing mixed waste that are located within the plants ~~will be~~are arranged within process cells, process rooms, caves, or other areas provided with secondary containment liners or coatings. ~~-~~The outside tanks ~~will be~~and vessels are located on a ~~coated,~~ bermed, concrete pad ~~within concrete berms~~, provided with special protective coatings and covings or waterstops, or provided with stainless steel liners that ~~will~~ provide secondary containment.

The secondary containment systems ~~will be~~are designed, installed, and operated to prevent migration of waste or accumulated liquid to soil, groundwater, or surface water. ~~-~~The piping associated with the tank systems ~~will be~~are located in the process cells, process rooms, caves, berms, or bulges. ~~-~~Secondary containment for piping systems ~~will be~~is incorporated into the design.

Tank systems and wet miscellaneous treatment systems ~~will be~~are provided with secondary containment that can contain 100% of the volume from the largest tank within the containment area. ~~-~~In the ~~pretreatment facility~~Pretreatment Facility, the 15 black cells and the hot cell at the 0' (~~foot~~ft) elevation are interconnected through hydraulic connections (open penetrations that interconnect adjacent cells) such that the combined secondary containment volume is available, if necessary, to contain a 100% leak from the largest tank. ~~-~~A leak to the hot cell floor, if large enough, ~~will drain~~drains to the overflow vessels in the pit at -45' (~~foot~~ft) elevation and ultimately to the -45' (~~foot~~ft) pit secondary containment if the volume of the overflow vessel(s) is exceeded. ~~-~~Secondary containment areas lined with stainless steel ~~will~~ have a gradient (minimum 1%) designed to channel fluids to a sump. ~~-~~In some cases, there may be more than a single sump. ~~-~~For example, the hot cell in the ~~pretreatment facility~~Pretreatment Facility has three instrumented sumps for leak detection.~~-~~ Fire suppression water is included as appropriate in determining the height of the secondary containment. ~~-~~Table ~~-~~4D-~~-~~3 in Appendix ~~-~~4D, Table ~~-~~4E-~~-~~3 in Appendix ~~-~~4E, Table ~~-~~4F-~~-~~3 in Appendix ~~-~~4F, Table ~~-~~4G-3 in Appendix 4G, and Table 4H-~~-~~2 in Appendix ~~-~~4H summarize the calculated minimum liner height at the four process plants~~.~~ and the Lab. The flooding volume documents identified above present the secondary containment height for each plant.

A concrete berm with protective ~~coating will be~~coatings or stainless liners is used for the ~~pretreatment facility~~Pretreatment Facility and EMF outdoor tanks~~. This~~ and vessels. These secondary containment ~~area will be~~areas are capable of holding 100% of the volume from the largest tank within the berm, plus the precipitation from a 25-year, 24-hour rainfall event, as required under WAC 173-303-640(4)(e)(i)(B).

The WTP uses selected industry standards to ensure secondary containment systems have sufficient strength, thickness, and compatibility with waste. ~~-~~The design includes an engineered structural base to protect against failure resulting both from excess force applied during catastrophic events or settlement, and from the stress of daily operation.

In the event of a spill or release, the secondary containment design ~~will prevent~~prevents released mixed waste from reaching the environment, and ~~will~~ safely ~~contain~~contains the waste until it can be transferred to an appropriate collection tank.

The following subsections provide detailed descriptions of typical secondary containment systems that will be used at the WTP.

Process Cells

Process cells ~~will be~~are located within process plants. ~~-~~Process cells ~~will~~are typically ~~be~~ constructed of concrete walls to protect plant operators and the environment from radiological exposure and to prevent migration of waste or accumulated liquid to soil, groundwater, or surface water. ~~-~~Operator access to the process cells ~~will~~is not ~~be~~ allowed during normal operations. However, access is allowed for certain areas

within WTP for nonroutine operations such as equipment replacement or maintenance. Process cells are provided with liners and special protective coatings as required. Systems within process cells that manage mixed waste have secondary containment (for example, process vessels and piping).

Black Cells

A black cell is a type of process cell that may contain vessels, evaporators, and piping systems that are used to support process waste stream storage and blending functions. No active equipment (i.e., equipment with moving parts) components are located in the black cell. The design for the vessels and piping is all welded construction. Some instrumentation (e.g., thermocouples, radiation detectors) are remotely replaceable by insertion into sealed pipe wells. The black cell vessels and design do not possess design features for remote replacement. The black cell concept is used in areas where the risk of vessel or piping failure due to corrosion or erosion is low. The ~~WTP pretreatment facility~~Pretreatment Facility contains fifteen black cells and the HLW Vitrification ~~facility~~Facility contains three black cells.

Hot Cell

Alternatively, a hot cell is a type of process cell that contains active equipment and ~~will~~ periodically ~~need~~needs to be remotely accessed for equipment maintenance or replacement.

All process cells ~~will be~~are provided with secondary containment as required. The floor ~~will be~~is sloped to a collection sump to allow for collection and removal of accumulated liquid within the sump.

~~Process Rooms~~

~~Process rooms will be located in the LAW vitrification facility and will be very similar to process caves. Access to process rooms will not be allowed during normal operations. However, access will be allowed for certain areas within WTP for nonroutine operations such as equipment replacement or maintenance. Process rooms will be provided with secondary containment as required. Systems within process rooms that manage mixed waste will have secondary containment (for example, the locally shielded melter and piping).~~

Caves

Caves ~~will be~~are located within process plants. Caves ~~will~~ typically ~~be~~are constructed with concrete walls thick enough to protect personnel from exposure to mixed waste. Caves ~~will~~ house mechanical handling equipment designed for remote operation and maintenance. They ~~will~~ generally have viewing windows and closed circuit television to allow observation of the cave operations and for overseeing remote maintenance. The cave floors and portions of the walls ~~will be~~are provided with secondary containment as required. The floor of the cave ~~will be~~is sloped to a collection sump to allow for collection and removal of accumulated liquid within the sump.

Berms

Concrete berms ~~will be~~are used at the LAW Vitrification Facility for the Caustic Collection Tank (LVP-TK-00001~~) and~~). The berms are of sufficient structural strength and height to contain the 100% of the volume of the largest tank.

Vault-like structures are used for the two outdoor Process Condensate Tanks (RLD-TK-00006A/B) at the ~~pretreatment facility. The berms will be~~Pretreatment Facility, and the eight outdoor vessels at EMF (DEP-VSL-00002, / DEP-VSL-00003A/B/C, DEP-VSL-00004A/B, and DEP-VSL-00005A/B). These vault-like structures are of sufficient structural strength and height to contain the 100% of the volume of the largest tank plus, for the outdoor Process Condensate Tanks, the amount of precipitation that results from the 24-hour, 25-year storm event.

A protective coating ~~will be~~is applied to the concrete pad and a portion of the berms and vault-like structures to prevent contaminant penetration into the concrete. The containment system ~~will be~~is designed to allow for the discharge of storm water after visual or other testing.

Drip Pan

The ancillary equipment/piping may be provided with a drip pan, sloped, or otherwise designed to perform the secondary containment functions, including leak detection. One such drip pan is located in the HLW ~~vitrification facility~~Vitrification Facility Drum Transfer Tunnel (H-B015). Design details of the HLW drip pan are provided in the *Secondary Containment Design*, 24590-WTP-PER-CSA-02-001, located in Operating Unit Group 10 Appendix 7.5.

LAW Melter Feed Line Encasement Assembly

The feed lines that transfer wastes from the LAW ~~melter feed process~~Melter Feed Process (LFP) system to the melters are housed in the LAW Melter Feed Line Encasement Assemblies (LMP-LDB-00001/00002). The encasement assemblies are a sloped bellows encasement that contains the feed line where they travel between the process cells and the melter gallery. The encasement assemblies are equipped with leak detection cables that run under the feed lines and into the bellows. The assemblies are equipped with drain lines to flow to sumps in the LAW process cells.

Autosampling System (ASX) Samplers

The autosampling system (ASX) samplers in the ~~PTF~~Pretreatment Facility, HLW Vitrification, and LAW Vitrification facilities contain both upper and lower secondary containment liners and leak detection systems. The upper containment area is designed to collect a potential leak from the incoming sample feed and return lines where they connect to the ISOLOK sampling device. If a leak occurs in the upper containment area, the leak flows to the sloped liner which diverts the leak to the annular space of the coaxial sample return lines. Leaks flow down the secondary containment pipe and discharge to secondary containment with leak detection, typically a sump with a radar level detector. The ASX sample feed and sample return lines, and the routing of potential leaks in the annular space of the return lines are shown on the associated process system piping and instrumentation diagrams (P&IDs) provided in Operating Unit Group 10, Appendix 8.2, 9.2, and 10.2.

The sloped stainless steel liner in the lower containment area is designed to divert liquids to a sloped collection trough. The trough contains a removable weir that allows liquids to collect and activate the thermal level detection switch and alarms to indicate that a leak has occurred. Effluent from a leak flows to the same drain line that manages ISOLOK flush solutions. The ISOLOK flush lines terminate below the top of the trough drain to ensure that the leak detection system is not activated when flushing the ISOLOK. The ASX lower containment area drain lines are shown on the associated process system P&IDs provided in Operating Unit Group 10, Appendix 8.2, 9.2, and 10.2.

Sump and Leak Detection Boxes and Secondary Containment Drain Systems

Sumps, leak detection boxes, and secondary containment drain systems for the ~~three~~four process plants and the ~~analytical laboratory~~Lab are listed in Table 4D-4 in Appendix 4D, Table 4E-4 in Appendix 4E, Table 4F-4 in Appendix 4F, Table 4G-4 in Appendix 4G, and Table 4H-3 in Appendix 4H and described in the following sections. Systems ~~will~~ monitor and collect liquids managed in the system. Sumps, leak detection boxes, and secondary containment drains ~~will be~~are provided with a stainless steel liner or equivalent to act as the secondary containment. The sumps and leak detection boxes within the process areas ~~will~~ provide a low point for each secondary containment. The sumps and leak detection boxes ~~will~~ serve the following functions:

- Low point containment.
- Removal of material by means of sump emptying ejectors or pumps.

- Sampling of sump contents by means of sump sampling ejectors.

The following sections describe the type of sump used at the WTP and the secondary containment drains.

Sumps and Leak Detection Boxes

Sumps and leak detection boxes are part of the secondary containment system provided for tank systems and wet miscellaneous treatment systems. Sumps and leak detection boxes are located at a low point in the secondary containment systems, and are equipped with leak detection instrumentation and corresponding alarm. Mechanical or fluidic pumps are used to remove liquid that may accumulate in a sump or leak detection box.

A typical sump design is shown in *Secondary Containment Design*, 24590-WTP-PER-CSA-02-001, located in Operating Unit Group 10 Appendix 7.5. Design details of each sump and leak detection box, such as the sump size, capacity, level detection instrumentation and pumps or ejectors are included in Table 4D-4 in Appendix 4D, Table 4E-4 in Appendix 4E, Table 4F-4 in Appendix 4F, Table 4G-4 in Appendix 4G, and Table 4H-3 in Appendix 4H and shown on the P&IDs for the Radioactive Liquid Waste Disposal (RLD) and/or Plant Wash and Disposal (PWD) systems, located in Operating Unit Group 10 Appendices 8.2, 9.2, 10.2, and 11.2.

Four sumps located in the HLW ~~vitrification facility~~Vitrification Facility Melter Cave 1 and 2 (HSH-SUMP-00003/7/8/9) ~~will be~~are equipped with stainless steel sump baskets. Sump baskets ~~will~~ capture and retain small objects which may be inadvertently dropped into the sump, and prevent them from entering the piping. The baskets ~~will be~~are provided with a lifting bail for the crane to remove from the sump and handles for the power manipulator to empty into a waste bucket. A typical sump basket design is shown in *Secondary Containment Design*, 24590-WTP-PER-CSA-02-001, Figure 10, located in Operating Unit Group 10 Appendix 7.5. Sump baskets are also identified on the P&IDs for the HLW RLD system, located in Operating Unit Group 10 Appendix 10.2. Sumps in the Pretreatment Facility, LAW, Lab and EMF are provided with screened or perforated covers to prevent small objects from falling into, or accumulating in the sump. An example of a typical sump screened cover is shown *Secondary Containment Design*, 24590-WTP-PER-CSA-02-001, Figure 20, located in Operating Unit Group 10 Appendix 7.5.

Secondary Containment Drains

Many of the bulges, the autosamplers, and some process areas ~~will~~ have secondary containment drains. This type of liquid collection system ~~will be~~is located in a low spot in the cell formed by the sloping floor. Liquid detection instrumentation ~~will be~~is provided for the secondary containment drains. ~~Liquid collected will~~Collected liquids gravity-drain to a collection vessel with a tank level indicator. The ~~liquid~~ managed liquids could be waste released from a tank system, including ancillary equipment, or water used to wash the exterior of tanks or the walls of the containment area. Design details of each secondary containment drain/drain line are included in Table 4D-4 in Appendix 4D, Table 4E-4 in Appendix 4E, Table 4F-4 in Appendix 4F, Table 4G-4 in Appendix 4G, Table 4H-3 in Appendix 4H and shown on the P&IDs for the RLD and/or PWD systems, located in Operating Unit Group 10 Appendices 8.2, 9.2, 10.2, and 11.2.

Design Requirements

The process cells, process rooms, or caves with mixed waste vessel or tank systems will be partially lined with stainless steel or special protective coating, which will cover the floor and extend up the sides of the process cell or cave to a height that can contain 100 percent of the volume from the largest tank within the process cell or cave. Table 4D-3 in Appendix 4D, Table 4E-3 in Appendix 4E, Table 4F-3 in Appendix 4F, Table 4G-4 in Appendix 4G, and Table 4H-2 in Appendix 4H present the calculated minimum secondary containment liner height at the four process plants and the Lab.

A concrete berm with special protective ~~coating will be~~coatings or stainless liner are used for the ~~pretreatment facility~~Pretreatment Facility and EMF outdoor tanks~~. This~~ and vessels. These secondary containment ~~area will be~~areas are capable of holding 100% of the volume from the largest tank within the berm, plus the precipitation from a 25-year, 24-hour rainfall event, as required under WAC 173-303-640(4)(e)(i)(B).

The WTP uses consensus-recognized standards to ensure that the process cells, process rooms, caves, or berms provide secondary containment with sufficient strength, thickness, and compatibility with waste. The design includes an engineered structural base to protect the cells, caves, berms and tank systems against failure resulting both from excess force applied during catastrophic events or settlement, and from the stress of daily operation. In the event of a spill or release, the structural and foundation design for tank and process cells, process rooms, caves and berms ~~will prevent~~prevents released mixed waste from reaching the environment, and ~~will~~ safely ~~contain~~contains the waste until it can be transferred to an appropriate collection tank.

4.2.6.2 Management of Release or Spill to Sump and Secondary Containment Drain Systems

The WTP uses dry sumps and leak detection boxes as part of the secondary containment and leak detection systems. Sumps and leak detection boxes are instrumented to inform the operator to investigate the cause of the liquid detected in the sump or leak detection box. Secondary containment systems are sloped to direct flow of leaks or spills to the sump or leak detection box. To remove liquid from the sumps or leak detection boxes in a timely fashion, sumps and leak detection boxes ~~will be~~are equipped with mechanical or fluidic pumps.

A detection alarm indicating that there is liquid in the sump or leak detection box will be investigated to determine if the alarm is valid. If the alarm is valid, the incident will be corrected. Mixed waste released from the primary system and collected in a sump or leak detection box will be removed within 24 hours, or in as timely a manner as possible. If the released material cannot be removed within 24 hours, the Washington State Department of Ecology (Ecology) will be notified.

4.2.6.3 Additional Requirements for Secondary Containment

The WTP dangerous waste storage tanks have vault-type secondary containments that have either ~~of~~chemical-resistant water stops and special protective coatings or the following configurations that the Department of Ecology has approved as equivalent to a coating/water stop system:

- An impermeable interior coating that is compatible with the stored waste and a polymeric filler material at interior corners and construction joints that performs a function equivalent to a water stop.
- A welded stainless steel liner attached to walls and floors.

Ancillary equipment such as piping is addressed within Section 4.2. Other types of ancillary equipment such as pumps, seal pots, and reverse flow diverters are provided with secondary containment. Inspection of ancillary equipment is addressed in Operating Unit Group 10, Chapter 6.0.

4.2.7 Variances from Secondary Containment Requirements

No variances from secondary containment requirements are sought for the WTP tank systems. Tank systems ~~will be~~are provided with secondary containment as identified in the flooding volume documents described in the previous sections.

4.2.8 Tank Management Practices

The following provides the basic philosophy for the WTP vessel overflow systems. Three types of barriers exist to prevent overfill of process equipment: preventive controls, detectors, and regulators.

Preventive controls promote controlled filling within normal process ranges. Detectors recognize if a vessel is being overfilled and alert an operator. Lastly, if preventive controls and detectors fail to stop overfill from occurring, regulators trip a control sequence that stops inflow and/or initiates outflow. The principal design concept to control vessel overflow is to prevent an overflow from occurring. The engineering design ~~will minimize~~minimizes the likelihood of tank, ancillary equipment, and containment system overflows, and over-pressurization, ruptures, leaks, corrosion, and other failures.

In general, overflows ~~will be~~are prevented by inventory control in conjunction with level monitoring. The fluid levels in a vessel ~~will be~~are maintained within low- and high-level ranges. Appropriate alarm settings ~~will be~~are used to note deviations from the designed settings. Automatic trip action ~~will be~~is designed to shut down feed to the vessel when the high-level settings are exceeded. These automatic trip actions ~~will be~~are provided for vessels with the potential for high operational and environmental impact in case of an accident or release.

Most of the WTP tank systems ~~will be~~are designed to incorporate minimal or zero maintenance requirements and ~~will be~~are based on a design life of approximately 40 years. The design emphasis of zero maintenance ~~will minimize~~minimizes the likelihood of spills and overflows in the tank systems. In the event that the process controls fail to prohibit vessel overfilling, engineered overflows ~~will be~~are provided to prevent liquid from entering the vessel ventilation systems. Vessels that are nominally operating at atmospheric pressure ~~will~~ have a suitable gravity or engineered overflow system, unless an overflow can be shown not to be possible. Vessels or systems that normally operate at above atmospheric pressures ~~will~~are not be provided with overflows.

The following principles apply when designing an engineered overflow system:

- The overflow system for vessels must be instantaneously and continuously available for use.
- Overflowed process streams must be returned to the waste treatment process.
- Overflow systems must meet the requirements of WAC 173-303, *Dangerous Waste Regulations*, Section 640, Tank Systems. In meeting these requirements, overflowing direct to the cell floor ~~will~~is only ~~be~~ considered as the last overflow in a cascaded system. Where an overflow is from a vessel to the cell, the overflow system ~~will maintain~~maintains segregation of the cell and vessel ventilation systems. The compatibility of the overflowing liquid and the recipient vessel ~~will be~~is considered.
- A vessel overflow line is sized to handle the maximum inflow to the vessel without the liquid level in the overflowing tank reaching an unacceptably high level. No valves or other restrictions are permitted in the overflow line. This line is also designed to prevent the buildup of material that could cause blockages.
- The overflow receiver is sufficiently sized to contain the overflow.
- Inspections ~~will be~~are performed on the various tank and overflow systems, using the example schedules described in DWP Operating Unit Group 10, Chapter ~~6.0~~6A.

4.2.9 Labels or Signs

Tanks managing mixed or dangerous waste ~~will be~~are labeled according to the requirements of DWP permit conditions DWP III.10.E.5.e, for routinely non-accessible tanks, and DWP III.10.E.5.f, for tanks not addressed in DWP III.10.E.5.e. The labels ~~will~~ inform employees and emergency personnel of the types of waste present, warn of the identified risks, and provide other pertinent information.

4.2.10 Air Emissions

This section describes air emissions from vessel ventilation systems and reverse flow diverter exhausts. Organic emissions from vents associated with evaporator or distillation units are also discussed.

4.2.10.1 Tank System Emissions

Most of the tanks ~~will be~~are connected to a vessel ventilation system to collect vapors. ~~-~~Vessel vents ~~will be~~are located on ~~major~~ process vessels and tanks, breakpots, and other small vessels. ~~-~~Exhaust from reverse flow diverters and pulse jet mixers ~~will~~are also ~~be~~ collected.

4.2.10.2 Process Vents

The air emission regulations, specified under WAC 173-303-690 and 40 CFR 264 Subpart AA, apply to process vents associated with distillation, fractionation, thin-film evaporation, and air or steam stripping operations that manage mixed waste with total organic carbon concentrations of at least 10 parts per million by weight. ~~-~~The WTP does not use these regulated processes; therefore, this regulation does not apply to the WTP.

4.2.10.3 Equipment Leaks

Regulations provided in WAC 173-303-691 and 40 CFR 264 Subpart BB contain the "Air Emission Standards for Equipment Leaks". ~~-~~These air emission standards do not apply to the WTP because waste feed entering the WTP contains less than 10% total organic carbon by weight and is excluded under 40 CFR 264.1050(b).

4.2.10.4 Tanks and Containers

The regulations specified under WAC 173-303-692 and 40 CFR 264 Subpart CC do not apply to the WTP mixed waste tank systems and containers. ~~-~~These tanks and containers qualify as waste management units that are "used solely for the management of radioactive dangerous waste in accordance with applicable regulations under the authority of the Atomic Energy Act and the Nuclear Waste Policy Act" and are excluded under 40 CFR 264.1080(b)(6). ~~-~~Containers bearing nonradioactive, dangerous waste, such as maintenance and laboratory waste, that is not excluded under 40 CFR 264.1080 (b)(2) or 40 CFR 264.1080(b)(8), will comply with the tank and container standards specified under 40 CFR 264 Subpart CC.

4.2.11 Management of Ignitable, Reactive and Incompatible Waste in Tanks

~~Mixed~~In the Baseline configuration, mixed waste from the ~~DST system unit will~~Hanford Tank Farms is initially ~~be~~ designated as both ignitable (D001) and reactive (D003). ~~-~~The D001 and D003 waste numbers ~~will be~~are as described in the waste analysis plan in DWP Operating Unit Group 10, Appendix 3A. ~~The~~The Pretreatment Facility process vessels ~~will be~~are located in a manner that meets the National Fire Protection Association (NFPA) buffer zone requirements for process vessels, as contained in Tables 2-1 through 2-6 of the *NFPA-30 Flammable and Combustible Liquids Code* (NFPA 1981). ~~-~~The process vessels ~~will be~~are designed to store the waste in such a way that it ~~will be~~is protected from materials or conditions that could cause the contents to ignite or react.~~-~~ Vessel contents will be constantly mixed and will be actively vented to process stacks, which will be equipped with vapor collection and treatment systems that will manage emissions. ~~-~~Further information on waste numbers is contained in DWP Operating Unit Group 10, Appendix 3A.

In the DFLAW configuration, the treated low-activity waste received from LAWPS will not demonstrate the characteristics of ignitable or reactive waste.

Ignitable or reactive waste may be generated from laboratory or maintenance activities. ~~-~~This waste ~~will be~~is accumulated and managed in compliance with regulatory requirements, in approved containers.

Potentially incompatible waste generated from laboratory or maintenance activities will not be stored in the tank systems.

A potential for incompatibility may exist, for example when nitric acid is used to elute waste components from ion-exchange column resins that were previously regenerated with sodium hydroxide. To minimize a reaction, water flushes ~~will be~~are performed between batches.

Process reagents that could react with waste in the tank systems ~~will be~~are stored in areas that are separated by physical barriers from process tanks. Potentially incompatible wastes generated from laboratory or maintenance activities will not be stored in proximity to each other in the tank systems.

4.3 LAW and HLW Miscellaneous Treatment Sub-Systems [WAC 173-303-680 and WAC 173-303-806(4)(i)]

The LAW vitrification system and HLW vitrification system consist of the vitrification melters, offgas treatment equipment, and associated equipment. The melters immobilize mixed waste in a glass matrix. The LAW vitrification system and the HLW vitrification system contain two melters each. The following sections provide additional information on the vitrification systems.

Other miscellaneous treatment sub-systems, and their associated process control features, are described in Section 4.2.

4.3.1 Melter Capacity and Production

For the melters, throughput is defined on the basis of quantity of glass waste produced. In turn, the quantity of glass waste produced depends on the degree to which the feed can be incorporated into the glass matrix. The maximum design throughput of the LAW Melter systems ~~will be~~is approximately 15 metric tons per day of glass waste for each melter and approximately 30 metric tons per day. The production rate of the HLW Melters is approximately 3 metric tons per day for each melter and approximately 6 metric tons per day throughput.

4.3.2 Description of Melter Units [WAC 173-303-806(4)(i)(i)]

The LAW Melter systems are located in the melter galleries and the HLW Melters are housed within the melter caves as depicted in the general arrangement plan and section permit drawings, which are found in DWP Operating Unit Group 10, Appendix 9.4 for the LAW ~~vitrification facility~~Vitrification Facility and Appendix 10.4 for the HLW ~~vitrification facility.~~ Vitrification Facility. The following subsections provide detailed descriptions of the melter units.

Low-Activity Waste Melter Units

Figure 4A-48 in Appendix 4A provides a sketch of ~~an~~a LAW Melter. Each LAW Melter (LMP-MLTR-00001/2) is a rectangular shell, lined with refractory material. An additional outer steel casing with access panels ~~will be~~is provided to enclose the LAW Melter. This outer steel casing is designed to provide local shielding and containment. Each LAW Melter has a nominal design capacity of approximately 15 metric tons of glass waste per day. Each ~~will have~~has a molten glass surface area of approximately ~~108~~107 square feet (ft^2). Each of the two LAW melters has external dimensions of approximately ~~26~~31 × 21 × 16 ft high, and weighs approximately ~~270~~295 metric tons empty and ~~290~~318 metric tons with glass. The operating temperature of the melter is between ~~950~~1050°C and ~~1250~~1200°C.

The locally shielded LAW Melter (LMP-MLTR-00001/2) ~~will be~~is operated and maintained in a personnel access area. The melter ~~will be~~is maintained at a lower pressure than the surrounding room to prevent escape of contaminants. Consumable melter parts ~~will be~~are replaced through access panels. The melters ~~will be~~are transported in and out of the gallery on a rail system. A transporter ~~will move~~moves the melters to and from the LAW ~~vitrification facility~~Vitrification Facility.

The melter refractory package is designed to serve as a mechanical, thermal, and electrical barrier between the molten glass residing in the melter and the melter shell. The refractory package is housed in a steel shell and provides containment for the molten glass. Active cooling on the outside of the refractory package is provided by water jackets. The water jackets ~~will be~~are in the intermediate loop of a two-loop system that ~~will transfer~~transfers heat from the LAW Melter through heat exchangers to cooling towers. The intermediate loop containing the water jacket ~~will be~~is a closed system that isolates the water circulating through the water jacket from the water in the cooling water loop circulating to the cooling tower. Mixed waste material leaking into the intermediate loop cooling water ~~will be~~is prevented from becoming an inadvertent discharge via the cooling tower. The refractory package ~~will provide~~provides adequate containment if there is a temporary loss of cooling. Penetrations in the melter system are sealed using appropriate gaskets and flanges. This system is designed for plenum temperatures of up to 1,100°C. The LAW melter lid is composed of steel and refractory material layers.

Each LAW Melter (LMP-MLTR-00001/2) ~~will use~~uses two independent discharge chambers. An air lift pumps molten glass from the bottom of the melter pool, through a riser, into a discharge chamber, and pours it into an ILAW container. The ILAW is then allowed to cool, forming a highly durable borosilicate glass waste form within the container.

Spent LAW Melters ~~will~~are initially be managed within the LAW melter gallery containment building unit. Spent LAW Melters ~~will be~~are removed from the melter gallery and transported using a transport and rail system. If necessary, the melter exterior surfaces will be decontaminated prior to transfer to a Hanford Site TSD unit.

High-Level Waste Melter Units

Figure 4A-~~54~~27 in Appendix 4A provides a sketch of an HLW Melter. In addition, the HLW melter mechanical assembly drawings (24590-HLW-MF-HMP-00001/2/3) are located in Operating Unit Group 10, Appendix 10.~~6~~2. Each HLW Melter (HMP-MLTR-00001/2) is a rectangular shell, lined with refractory material. They have four compartments: a glass tank, two discharge chambers, and a plenum just above the glass tank. The tanks are lined with refractory material designed to withstand corrosion by molten glass.

The HLW Melter systems consist of two melters. Each HLW Melter (HMP-MLTR-00001/2) is designed for glass production rates up to 3 metric tons per day (MTG/d). The normal operating temperature of the melter is between 950°C and 1250°C. The HLW Melters have a molten glass surface area of approximately 40 ft^2. The HLW Melters have external dimensions of approximately 11 ft high × 14 ft deep × 14 ft wide. The glass contained in a full HLW Melter has a volume of approximately 145 ft^3 and weighs approximately 9.1 metric tons. An entire melter, including the supporting structure and transport mechanism, weighs approximately 90 metric tons empty and approximately 99 metric tons full.

The HLW Melters (HMP-MLTR-00001/2) ~~have been~~are designed to be remotely operated and maintained. Remote maintenance ~~will be~~is performed by a power manipulator, overhead crane, and auxiliary hoist, or by through-wall master-slave manipulators. The melter ~~will be~~is positioned within the HLW ~~vitrification facility~~Vitrification Facility for ease of access and viewing of both discharge chambers during operations, and for viewing access to the melter lid to facilitate removal and replacement of subcomponents, if needed. A rail and bogie transport system ~~will facilitate~~facilitates remote removal and replacement of the entire melter structure.

The HLW Melters (HMP-MLTR-00001/2) ~~will use~~uses a refractory package similar to the LAW melter to contain the molten glass. The refractory package is designed to serve as a mechanical, thermal, and electrical barrier between the molten glass inside the melter and the melter shell.

The HLW Melters ~~will~~ also use an outer shell, which, with the refractory package, ~~will contain~~contains the molten glass and melter offgas. Active cooling on the exterior of the melter ~~will be~~is provided by a

water jacket, which ~~will be~~is in a two-loop system that ~~will transfer~~transfers heat from the HLW Melter through heat exchangers to cooling towers. ~~-~~The loop containing the water jacket ~~will be~~is a closed system that isolates the water circulating through the water jacket from the water in the cooling water loop circulating to the cooling tower. ~~-~~Mixed waste material leaking into the intermediate loop cooling water ~~will be~~is prevented from becoming an inadvertent discharge through the cooling tower. ~~-~~The refractory package ~~will provide~~provides adequate containment should there be a loss of cooling. ~~-~~The HLW Melter lid ~~will be~~is constructed of a steel outer shell and insulated from the melter plenum by refractory material.

The HLW Melter ~~will use~~uses two independent discharge chambers. ~~-~~Discharge ~~will be~~is achieved by transferring the molten glass from the bottom of the melter pool, through a riser, ~~from which it will be~~ and then poured into a stainless steel IHLW canister. ~~-~~Glass waste transfer ~~will be~~is accomplished through air lifting. ~~-~~The IHLW ~~will~~is then be allowed to cool, forming a highly durable borosilicate glass waste form.

Spent HLW Melters ~~will be~~are removed from the melter cave and placed in an overpack. ~~-~~The spent melter ~~will be~~is treated as newly generated waste, and ~~will~~is initially ~~be~~ managed within the HLW melter containment buildings. ~~-~~If necessary, the overpack will be decontaminated using a dry process. ~~-~~Failed HLW Melters ~~will be~~are stored in the failed melter storage building.

4.3.3 Automatic Waste Feed Cut-Off System

The LAW and HLW Melters ~~will be~~are equipped with the ability to cut off waste feed.~~-~~ Automatic waste feed cut-off systems terminate feed to the Melter if a specified operating condition is exceeded. ~~-~~This design approach is consistent with the WAC 173-303-680 regulatory requirements.

The LAW (LMP-MLTR-00001/2) and HLW (HMP-MLTR-00001/2) Melters are fed via air displacement slurry pumps that utilize pressurized air as the motive force. ~~-~~These pumps supply feed to the melters in slugs that act to keep lines from plugging.~~-~~ The feed is injected into the melters through the feed nozzles on top of the Melter creating a “cold cap”, where waste feed undergoes several physical and chemical changes. ~~-~~The glass product in the melter is then “air lifted” through the discharge chamber and into the glass container. ~~-~~Melter offgas is generated from the vitrification of LAW and HLW of which the rate of generation is dynamic and not steady state. ~~-~~The offgas is then carried away and treated via a dedicated offgas system.

The melter systems are designed to minimize the need for automatic waste feed cut-off functions. Control of melter level and plenum pressure, process alarming, and optimized operating procedures ~~will be~~are in place to reduce the occurrences of interlocking.~~-~~ Given the processing speeds and the relatively slow rates of change in the operating states of the melter, operators should have adequate time to react to upset conditions. ~~-~~An example of the slow rate of change can be seen in the volume of feed per air displacement slurry pump feed cycle when increasing melter level. ~~-~~Each pump cycle adds approximately ~~1~~one gallon of slurry into the melter. ~~-~~At ~~1~~one gallon of volume, the liquid level rises no greater than 0.01 inch inside the melter.~~-~~ This provides ample time for operator response.

Previous operating experience with similar melter systems has shown the following operating conditions warrant automatic waste feed cut off:

- Maximum melter chamber pressure
- Minimum off-gas temperature at the thermo catalytic oxidizer bed inlet
- Maximum carbon bed adsorber bed temperature
- Maximum stack gas flow rate
- Maximum stack gas carbon monoxide

These interlocks have been sufficient to allow continued melter operations without inadvertent feed cut off signals, yet provide a sufficient safety margin.

4.3.4 Offgas Treatment System

The offgas treatment system ~~will remove~~treats or removes steam, aerosols, entrained particulates, decomposition products, and volatile contaminants that are generated from the vitrification processes and the vessel ventilation systems. The typical constituents contained in the melter offgas stream are as follows:

- Nitrogen oxides from decomposition of metal nitrates in the melter feed.
- Chloride, fluoride, and sulfur as oxides, acid gases, and salts.
- Entrained feed material and glass.

A detailed description of the current offgas treatment trains for the LAW (LMP-MLTR-00001/2) and HLW (HMP-MLTR-00001/2) Melters is provided in Appendix 4E and Appendix 4F, respectively.

4.3.5 Miscellaneous Unit Emissions Performance

The WTP melter systems are thermal treatment units classified as miscellaneous units in Washington Administrative Code (WAC 173-303-680). The dangerous waste regulations require that permits for miscellaneous units include such terms, conditions, and provisions that are necessary to protect human health and the environment and are appropriate for the miscellaneous unit being permitted. ~~The Department of~~ Ecology has determined that regulations that are most appropriate to apply to the melters and offgas systems (melter systems) are found in the tank requirements (WAC 173-303-640) and applicable sections of the incinerator requirements (WAC 173-303-670) and 40 CFR Section 63.1203. As applied to the melter systems, the tank regulations primarily provide requirements for structural integrity, material compatibility, secondary containments, etc.

The incinerator regulations primarily provide operational requirements for parameters such as temperature, pressure, feed rate, demonstration testing, and performance standards, etc. ~~The Department of~~ Ecology determined and incorporated into the final WTP Dangerous Waste Permit issued in September 2002 the standards specified in 40 CFR Section 63.1203 in the following table apply to the WTP melter system miscellaneous units.

Miscellaneous Unit Emissions Performance Standards	
Pollutant	**Ecology-directed requirement**
PODC	99.99% DRE
Dioxins and Furans	0.20 ng TEQ/dscm
Mercury	45 µg/dscm
Lead and Cadmium	120 µg/dscm, combined emissions
Arsenic, Beryllium, Chromium	97 µg/dscm, combined emissions
Carbon Monoxide and Hydrocarbons	Carbon monoxide not in excess of 100 ppmv over an hourly rolling average, dry basis, and hydrocarbons not in excess of 10 ppmv over an hourly rolling average, dry basis, and reported as propane, at any time during the DRE test runs or their equivalent, or hydrocarbons not in

Miscellaneous Unit Emissions Performance Standards	
Pollutant	**Ecology-directed requirement**
	excess of 10 ppmv, over an hourly rolling average, dry basis, and reported as propane
Hydrochloric Acid and Chlorine Gas	21 ppmv, combined emissions, expressed as hydrochloric acid equivalents, dry basis
Particulate Matter	34 mg/dscm
• PODC is Principle Organic Dangerous Constituent • TEQ is dioxin/furan toxicity equivalence defined in 40 CFR 63.1201(a) • dscm is dry standard cubic meter • ppmv is parts per million by volume • Rolling average is the average of all 1- minute averages over the averaging period [40 CFR 63.1201(a)]	

DOE intends that the melter systems be designed and constructed so that they operate in compliance with the appropriate and applicable standards. Environmental performance demonstrations during cold commissioning of the HLW and LAW ~~vitrification~~Vitrification facilities ~~will be~~are used to verify compliance with the Destruction and Removal Efficiency (DRE) and other applicable air emission standards. The final WTP Dangerous Waste Permit issued in September 2002 also requires periodic demonstration testing ~~will~~ be performed after the WTP has begun processing radioactive wastes (Ecology, 2001).

4.3.6 Physical and Chemical Characteristics of Waste [WAC 173-303-680(2)(a)(i)]

A description of the waste characteristics of the LAW and HLW feeds is presented in DWP Operating Unit Group 10, Chapter 3.0 (see Appendix 3A). The immobilized waste generated by the vitrification processes ~~will be~~is in the form of glass that maintains its chemical and physical integrity during long-term storage. The ~~waste analysis plan~~Waste Analysis Plan (Appendix 3A) describes the types and frequency of analysis that will be performed on the glass waste.

~~4.3.74.1.1 Treatment Effectiveness Report [WAC 173-303-806(4)(i)(iv)]~~

~~A treatment effectiveness report evaluating the performance of the miscellaneous treatment sub-systems, and their effectiveness in treating the LAW and HLW, will be located in DWP Operating Unit Group 10, Appendix 9 for LAW and Appendix 10 for HLW. The report will use the results of the environmental performance demonstration and the risk assessment activities to document treatment effectiveness of miscellaneous treatment sub-systems.~~

~~4.3.8~~4.3.7 Environmental Performance Standards for Melter Systems [WAC 173-303-680(2)]

An environmental performance demonstration will be conducted to demonstrate the efficiency of the LAW and HLW Melter systems and their respective air pollution control systems. Emissions from the LAW and HLW systems will be sampled and analyzed during an environmental demonstration performed during cold commissioning. The data developed during the environmental performance demonstration ~~will support~~supports the screening-level risk assessment, which ~~will support~~supports the development of environmental performance standards for the LAW and HLW Melter systems.

The operational activities of the WTP include methods intended to ensure proper performance of equipment and processes. These methods include sampling of materials, use of direct process controls, development of equipment life specifications and ongoing maintenance.

~~4.3.8.1~~4.3.7.1 Protection of Groundwater, Subsurface Environment, Surface Water, Wetlands and Soil Surface [WAC 173-303-680(2)(a) and (b)]

The LAW Melters ~~will be~~are located in the LAW ~~melter gallery~~Melter Gallery (L-0112) within the LAW ~~vitrification facility.~~ Vitrification Facility. The HLW Melters ~~will be~~are located in the HLW ~~melter caves~~Melter Caves (H-0117, H-0106) within the HLW ~~vitrification facility.~~ Vitrification Facility. Both plants are designed to comply with standards that ensure protection of the surface and subsurface environments. The vitrification plants ~~will be~~are completely enclosed and are designed to have sufficient structural strength and corrosion protection to prevent collapse or other structural failure. In addition, the melter systems, melter feed systems, and related piping ~~will be~~are provided with secondary containment, to minimize the potential for release. The LAW melter gallery (L-0112) and the HLW melter caves (H-0117, H-0106) will be permitted as containment buildings and are described in Appendix 4E and Appendix 4F, respectively.

Floors within the vitrification plants ~~will be~~are protected in a manner consistent with the intended usage of the space. The floor and portions of the walls of HLW Melter cave ~~will be~~are partially lined with stainless steel. Nonradioactive materials usage areas requiring heavy equipment ~~will~~ have concrete floors with hardener and sealer finishes.

The *Hanford Facility Dangerous Waste Permit Application General Information Portion*, Section 5.4 (DOE-RL 1998), provides climatological data, topography, hydrogeological and geological characteristics, groundwater flow quantity and direction, groundwater quality data, and surface water quantity and quality data for the area around the WTP.

~~4.3.8.2~~4.3.7.2 Protection of the Atmosphere [WAC 173-303-680(2)(c)]

A risk assessment ~~will be~~is performed to evaluate the impacts of the WTP emissions on human and ecological receptors. Actual offgas emissions ~~will be~~is measured during an environmental performance demonstration that ~~will be~~is performed as part of the WTP commissioning activities. The data ~~will be~~is used during a screening-level risk assessment that ~~will be~~is performed to determine ecological and human health risk. The emissions data and the results of the screening level risk assessment ~~will be~~are used to establish operating conditions for the melters that do not endanger human health and the environment.

4.3.8 Treatment Effectiveness Report [WAC 173-303-806(4)(i)(iv)]

A treatment effectiveness report evaluating the performance of the miscellaneous treatment sub-systems, and their effectiveness in treating the LAW and HLW, will be located in DWP Operating Unit Group 10, Appendix 9 for LAW and Appendix 10 for HLW. The report uses the results of the environmental performance demonstration and the risk assessment activities to document treatment effectiveness of miscellaneous treatment sub-systems.

4.3.9 Approach to Risk Assessment [WAC 173-303-680(2)(c)(i) through (vii)]

A screening level risk assessment is being conducted to evaluate any possible human health and ecological risk posed by the thermal treatment of mixed wastes. The risk assessment ~~will provide~~provides information about the potential terrestrial, aquatic, and food pathways for exposure of human and ecological receptors to dangerous waste constituents. This risk assessment ~~will present~~presents the quantitative methods, detailed assumptions, and numerical parameters that ~~will be~~are used to estimate the nature, extent, and magnitude of potential risks from operation of the WTP. The primary regulatory

guidance followed for this risk assessment is found in the *Human Health Risk Assessment Protocol for Hazardous Waste Combustion Facilities* (EPA 1998a) and the *Screening-Level Ecological Risk Assessment Protocol for Hazardous Waste Combustion Facilities* (EPA 1999a)

Treated air emissions through the stack ~~will be~~are the only planned direct releases into the environment from the WTP. ~~-~~Other waste streams ~~will be~~are transferred to a permitted facility and ~~will~~are not ~~be~~ released directly into the environment. ~~-~~Thus, the overall risk assessment process ~~will focus~~focuses primarily on air emissions.

Major components of the human health and ecological risk assessment process for evaluating airborne emissions ~~will be~~are as follows:

- Risk assessment work plan
- Pre-demonstration test risk assessment
- Final risk assessment

The overall approach for the risk assessment ~~will be~~is to identify potential risks associated with various receptors, their locations, exposure pathways, and activity patterns in two broad exposure scenarios, as follows:

- Plausible exposure scenario
- Worst-case exposure scenario

The plausible exposure scenarios ~~will be~~are based on where potential receptors currently exist or may reasonably be expected to exist within the foreseeable future. ~~-~~The worst-case assumptions ~~will be~~are based on locations of maximum concentration even though it is not expected that such receptors will ever actually exist at these locations. ~~-~~Both scenarios will reflect current uses of the surrounding land and habitat and reasonable assumptions about future uses of the land and habitat.

During the environmental performance demonstration, emission samples ~~will be~~are collected and analyzed, and the data ~~will be~~ used to evaluate risk to the human population and ecological (such as wildlife) receptors. ~~-~~Operating conditions ~~will be~~are established for the WTP, which limit risks to human health and the environment to acceptable levels.

4.4 Other Waste Management Units

Sections 4.4.1 through 4.4.5 discuss the applicability of the requirements for waste management units that have not been discussed up to this point in the permit. ~~-~~Sections~~-~~ 4.4.6 through~~-~~ 4.4.9 describe the applicability of air emission controls, waste minimization, groundwater monitoring, and functional design requirements to the WTP. ~~-~~References to other sections of the permit are provided as appropriate.

4.4.1 Waste Piles

The operation of the WTP does not involve the placement of dangerous waste in waste piles.~~-~~ Therefore, the requirements of WAC 173-303-660, "Waste Piles", do not apply to the WTP.

4.4.2 Surface Impoundments

The operation of the WTP does not involve the placement of dangerous waste in surface impoundments. Therefore, the requirements of WAC 173-303-650, "Surface Impoundments", do not apply to the WTP.

4.4.3 Incinerators

The WTP does not include a dangerous waste incinerator. ~~Therefore,~~ However, applicable sections of the incinerator requirements ~~of WAC 173-303-670, "Incinerators", do not~~(WAC 173-303-670) and 40 CFR Section 63.1203 apply ~~to the WTP~~.

4.4.4 Landfills

The operation of the WTP does not involve the placement of dangerous waste in landfills. Therefore, the requirements of WAC 173-303-665, "Landfills", do not apply to the WTP.

4.4.5 Land Treatment

The operation of the WTP does not involve the land treatment of dangerous waste. Therefore, the requirements of WAC 173-303-655, "Land Treatment", do not apply to the WTP.

4.4.6 Air Emissions Control

Information regarding air emissions control is provided in the following sections:

- Pretreatment ~~facility vessel vent process~~Facility Vessel Vent Process and ~~exhaust system~~Exhaust System (PVP/PVV) - Appendix 4D, Section 4D.4.2
- LAW ~~vitrification~~ Vitrification Facility offgas treatment system description - Appendix 4E, Section 4E.4.2
- ~~HLW~~ HLW Vitrification Facility offgas treatment system description - ~~Appendix 4E, Section 4E.4.2~~
- ~~HLW vitrification offgas treatment system description~~ Appendix 4F, Section ~~4F.~~ 4.2
- Direct Feed LAW Effluent Management Facility Vessel Vent Process System (DVP) – Appendix 4G, Section 5.1
- Process vents (40 CFR 264 Subpart AA) - Section 4.2.10.2
- Equipment leaks (40 CFR 264 Subpart BB) - Section 4.2.10.3
- Tanks and containers (40 CFR 264 Subpart CC) - Section 4.2.10.4

4.4.7 Waste Minimization

Waste minimization information is presented in Operating Unit Group 10 of the permit.

4.4.8 Groundwater Monitoring for Land-Based Units

The groundwater monitoring requirements found in WAC 173-303-645, "Releases from regulated units", do not apply to the WTP, since it is not operated as a regulated dangerous waste surface impoundment, landfill, land treatment area or waste pile, as defined in WAC 173-303-040. Therefore, groundwater monitoring is not required.

4.4.9 Functional Design Requirements

The WTP will be designed to comply with applicable design codes and specifications. The documents referenced in this chapter~~,~~ appendices and contained in DWP Operating Unit Group 10 identify the codes and standards to which the WTP system, structures, and components are being constructed.

APPENDIX 4A
FIGURES AND DRAWINGS

This page intentionally left blank.

APPENDIX 4A
ENGINEERING FIGURES

The figures listed below are included in this appendix, and are to be used in conjunction with the text in the Dangerous Waste Permit (DWP) Chapter 4.

Title	Figure Number
Simplified Plant Flow Figures	
WTP Simplified Flow Diagram	4A-1
Primary Pretreatment Process Systems	4A-2
Primary Pretreatment Process Systems (Continued)	4A-2A
Primary LAW Vitrification Systems	4A-3
Primary HLW Vitrification Systems	4A-4
Process Flow Figures	
Cesium Resin Addition Process System (CRP)	4A-11
LAW Melter Process System (LMP)	4A-21
LAW Container Finishing Handling System (LFH)	4A-24
HLW Melter Process System (HMP)	4A-27
Typical System Figures	
Typical Tank System – Cesium Ion Exchange Column	4A-38
Typical System – LAW Melter Process System (LMP)	4A-48
Typical Tank System – HLW Melter Feed Process System (HFP)	4A-53
Typical Tank System – Containment Building (Sheet 1)	4A-59
Typical System - Containment Building Typical Design Features Crosswalk (Sheet 2)	4A-59
Simplified General Arrangement Figures	
Simplified General Arrangement Pretreatment – Plan at El. 98’	4A-65
Miscellaneous Figures	
Schematic of an Example IHLW Container and Label	4A-118
Schematic of an Example ILAW Container and Label	4A-119
Typical Arrangement of a Reverse Flow Diverter	4A-120
Basic Reverse Flow Diverter Design	4A-121
Typical Arrangement of a Steam Ejector System	4A-122
Typical Seal Pot Arrangement	4A-123
Typical Breakpot Arrangement	4A-124
Typical Bulge Configuration	4A-127
Typical Primary Containment Sump Conceptual Design	4A-128

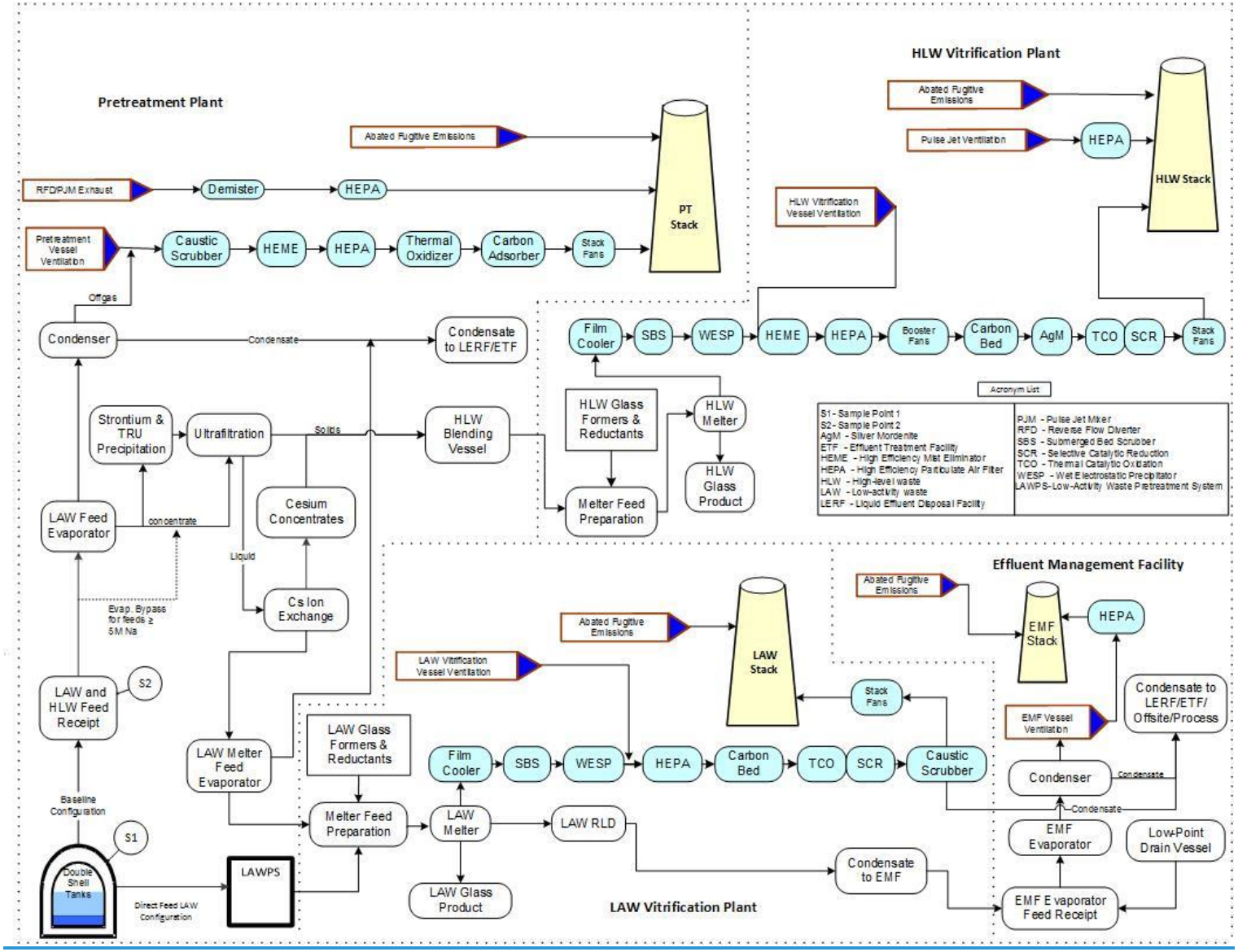

Figure 4A-1 WTP Simplified Flow Diagram

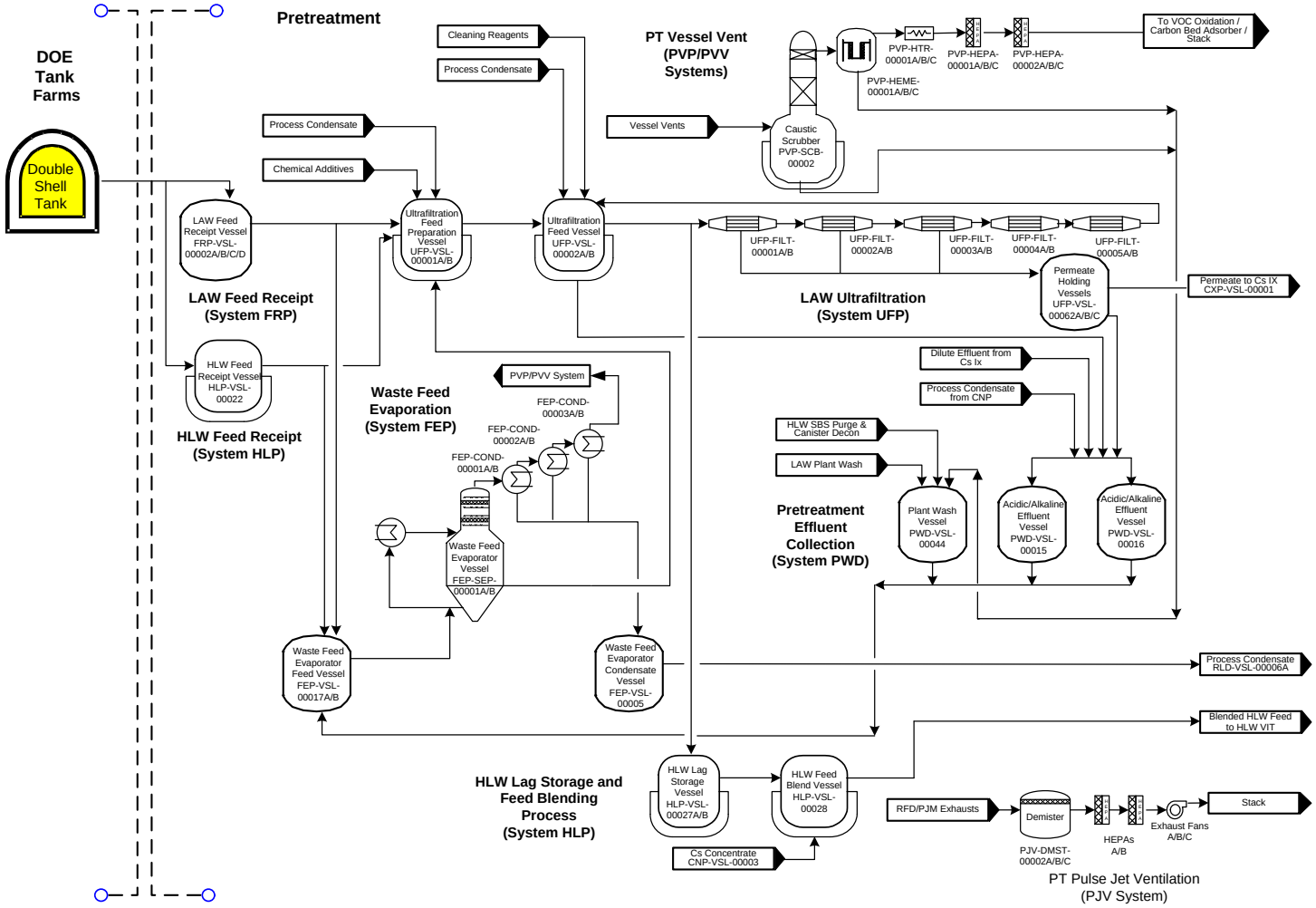

Figure 4A-2 Primary Pretreatment Process Systems

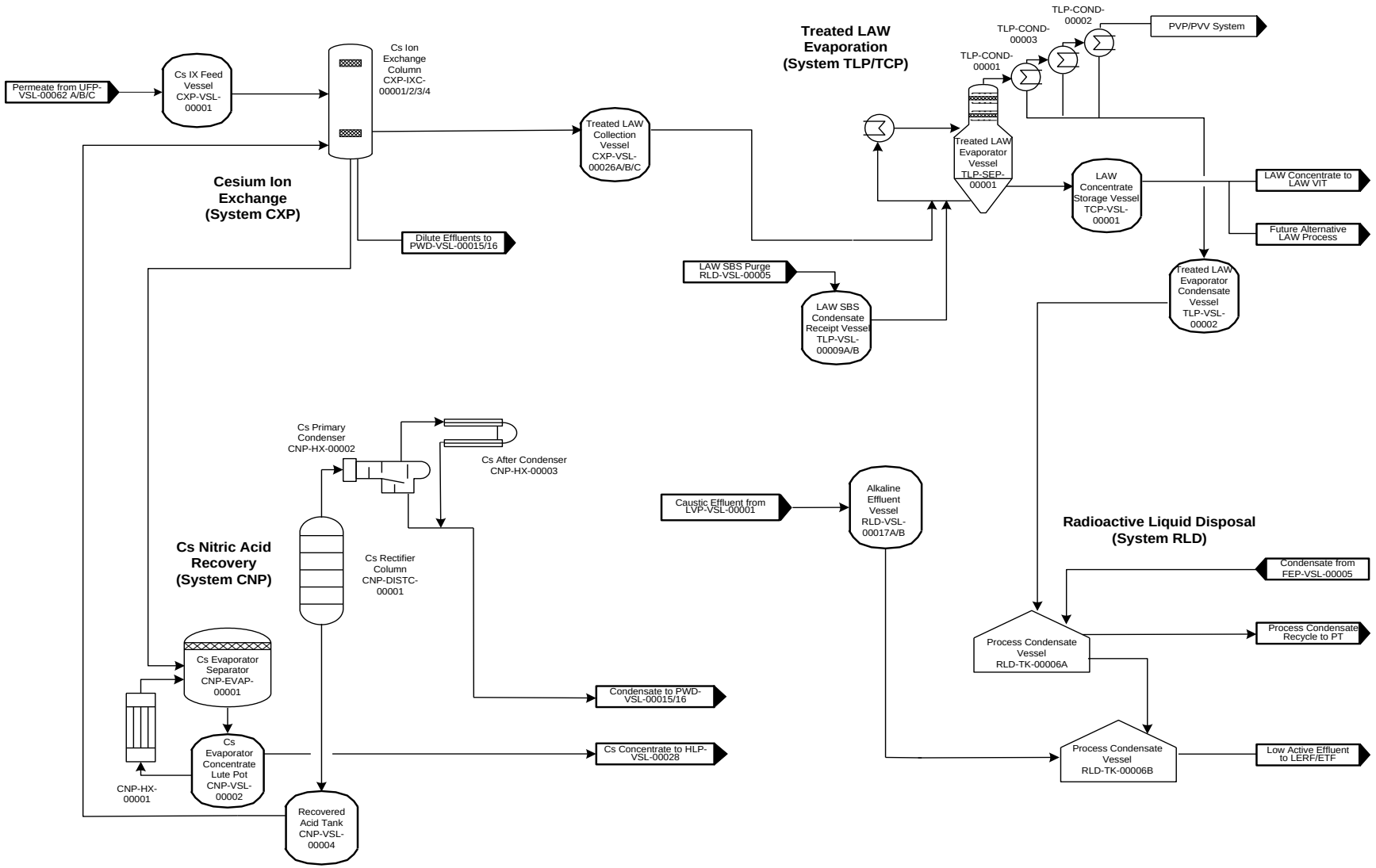

Figure 4A-2A Primary Pretreatment Process Systems (Continued)

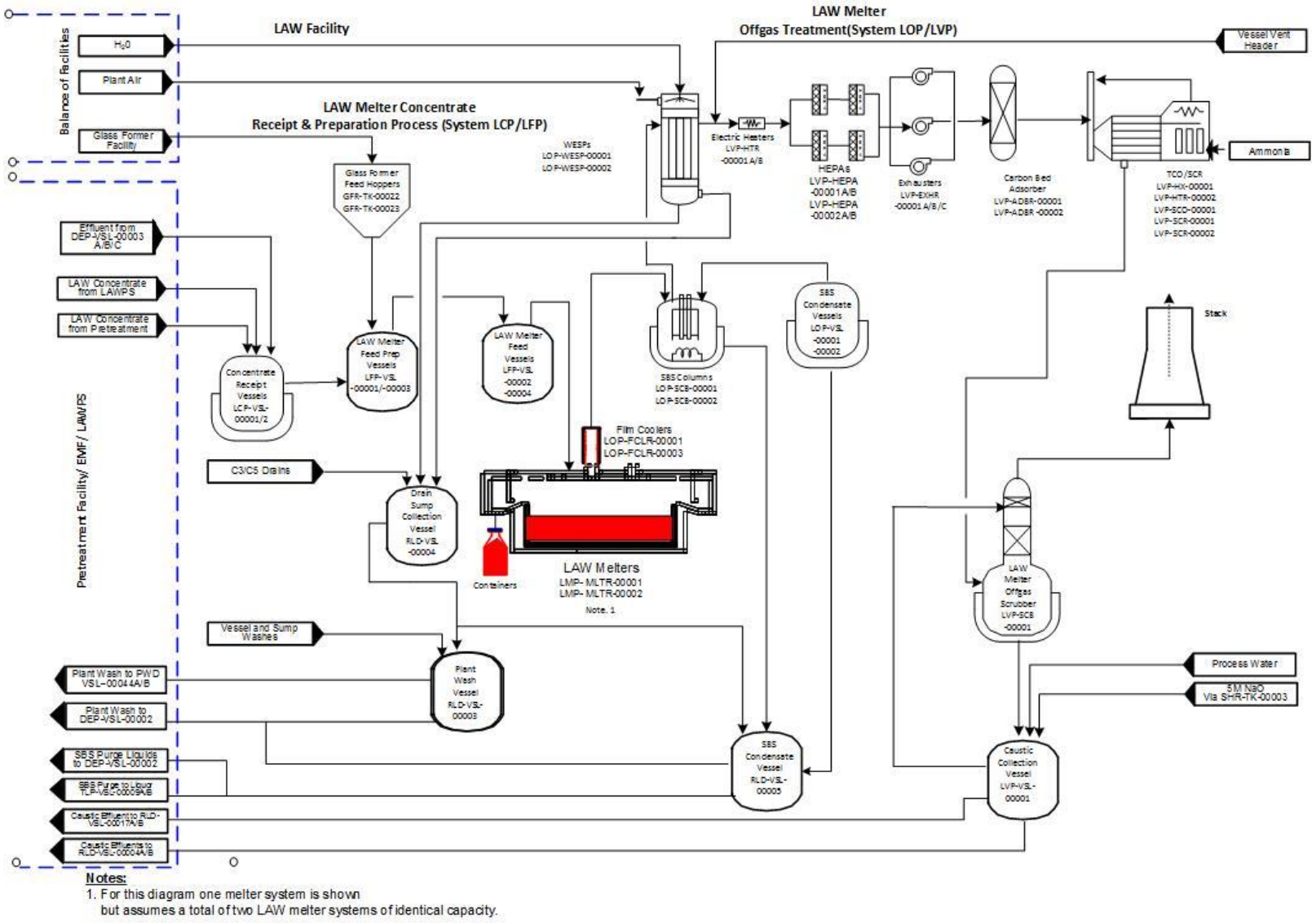

Figure 4A-3 Primary LAW Vitrification Systems

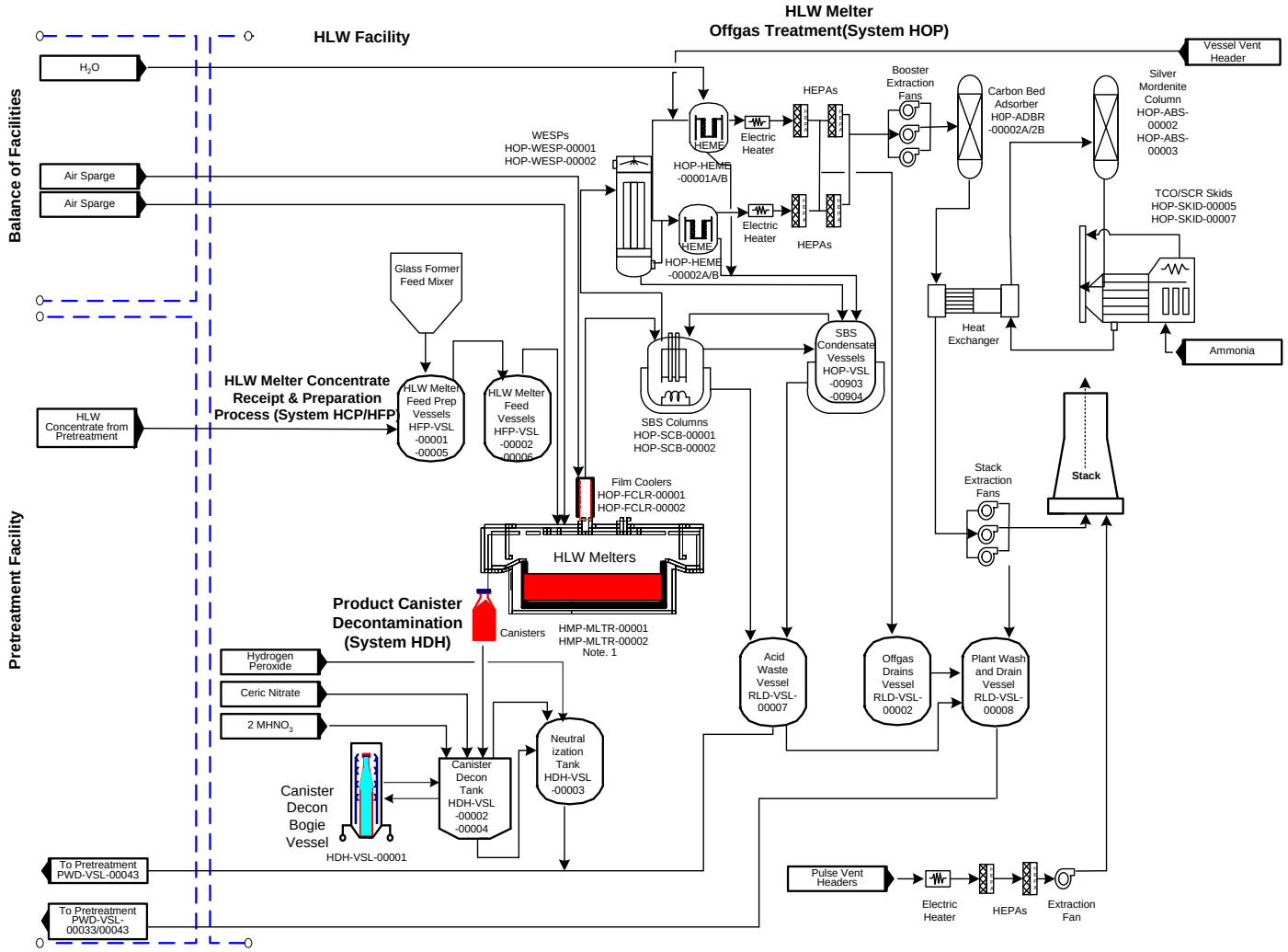

Figure 4A-4 Primary HLW Vitrification Systems

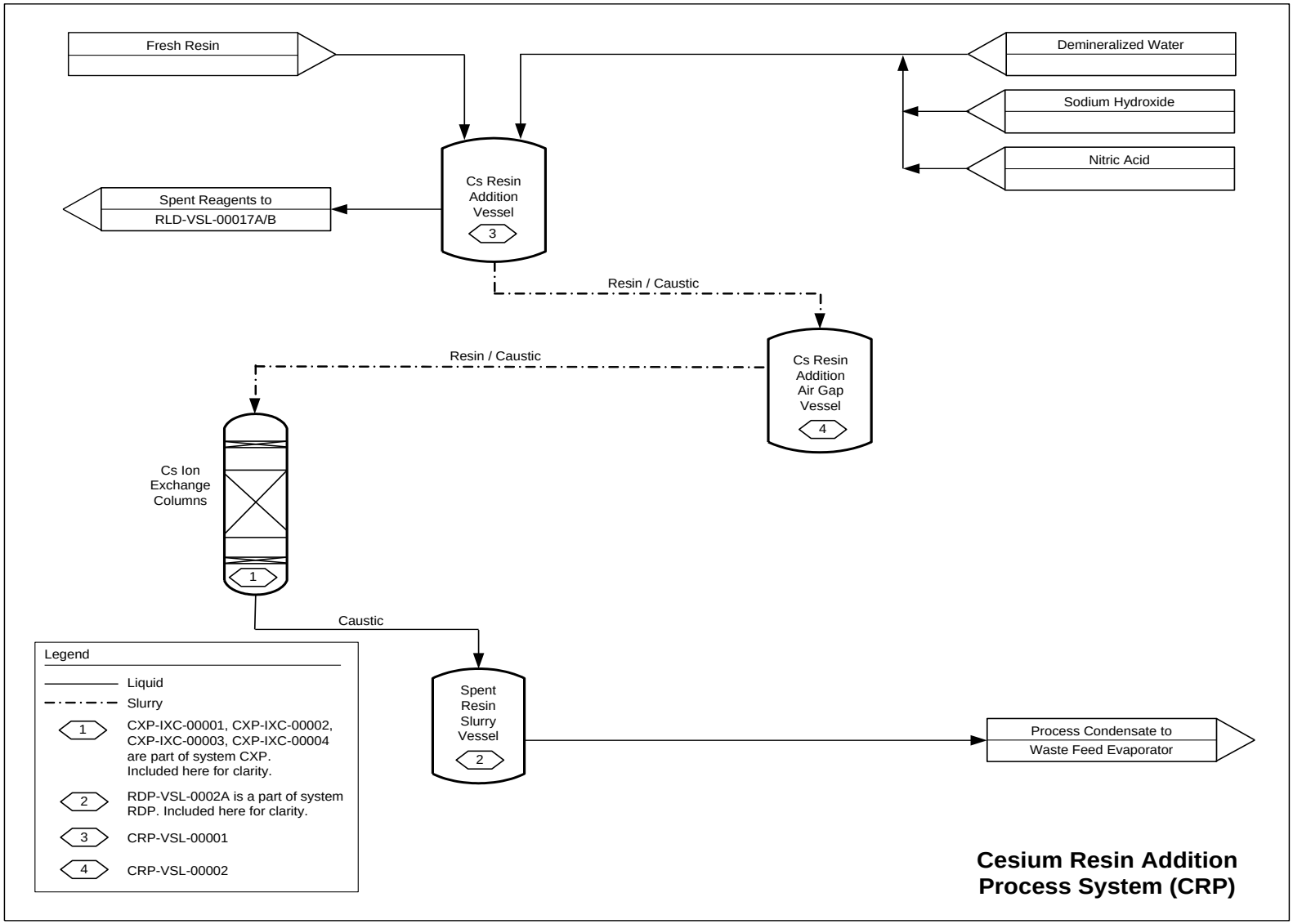

Figure 4A-11 Cesium Resin Addition Process System (CRP)

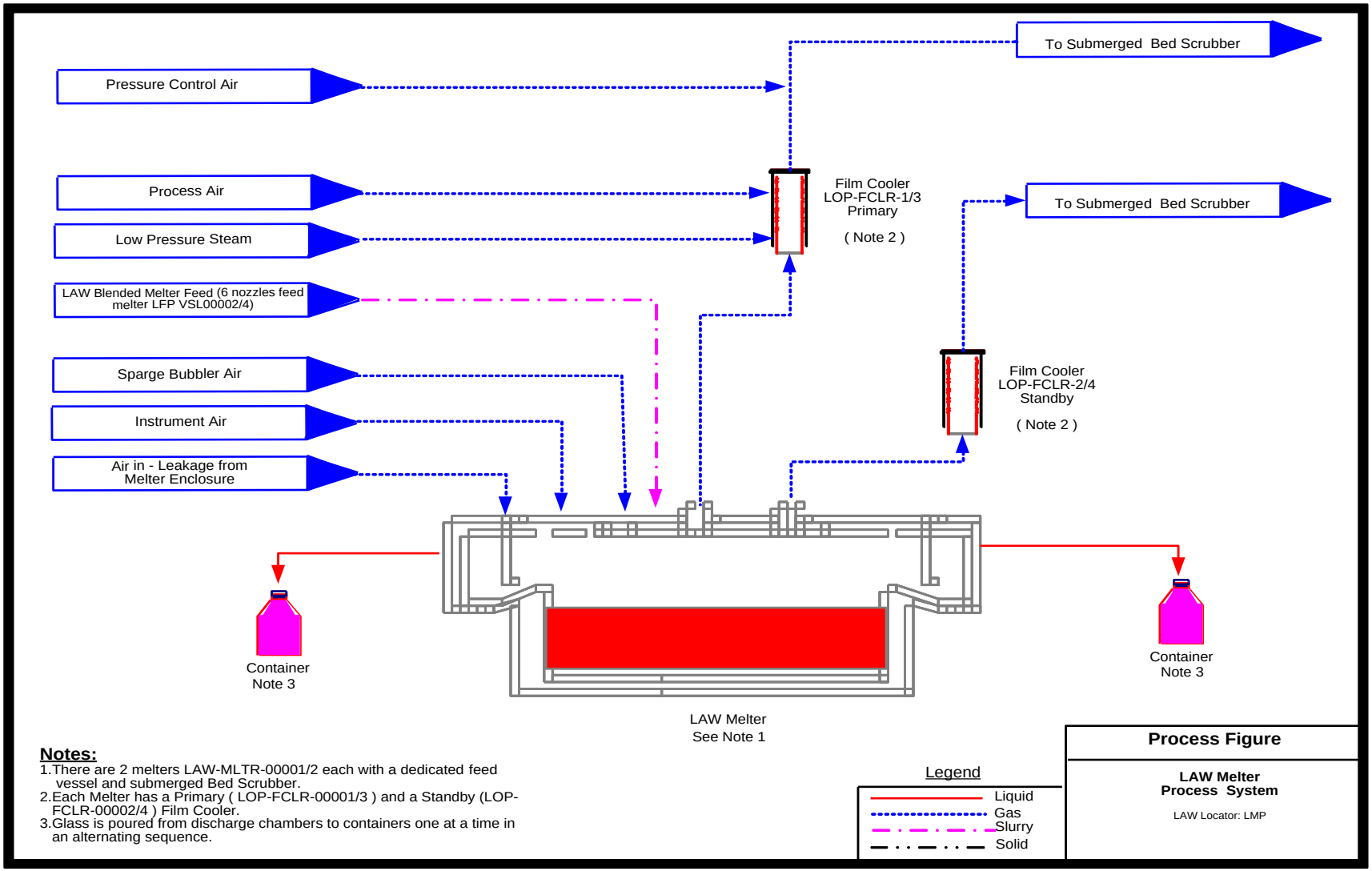

Figure 4A-21 LAW Melter Process System (LMP)

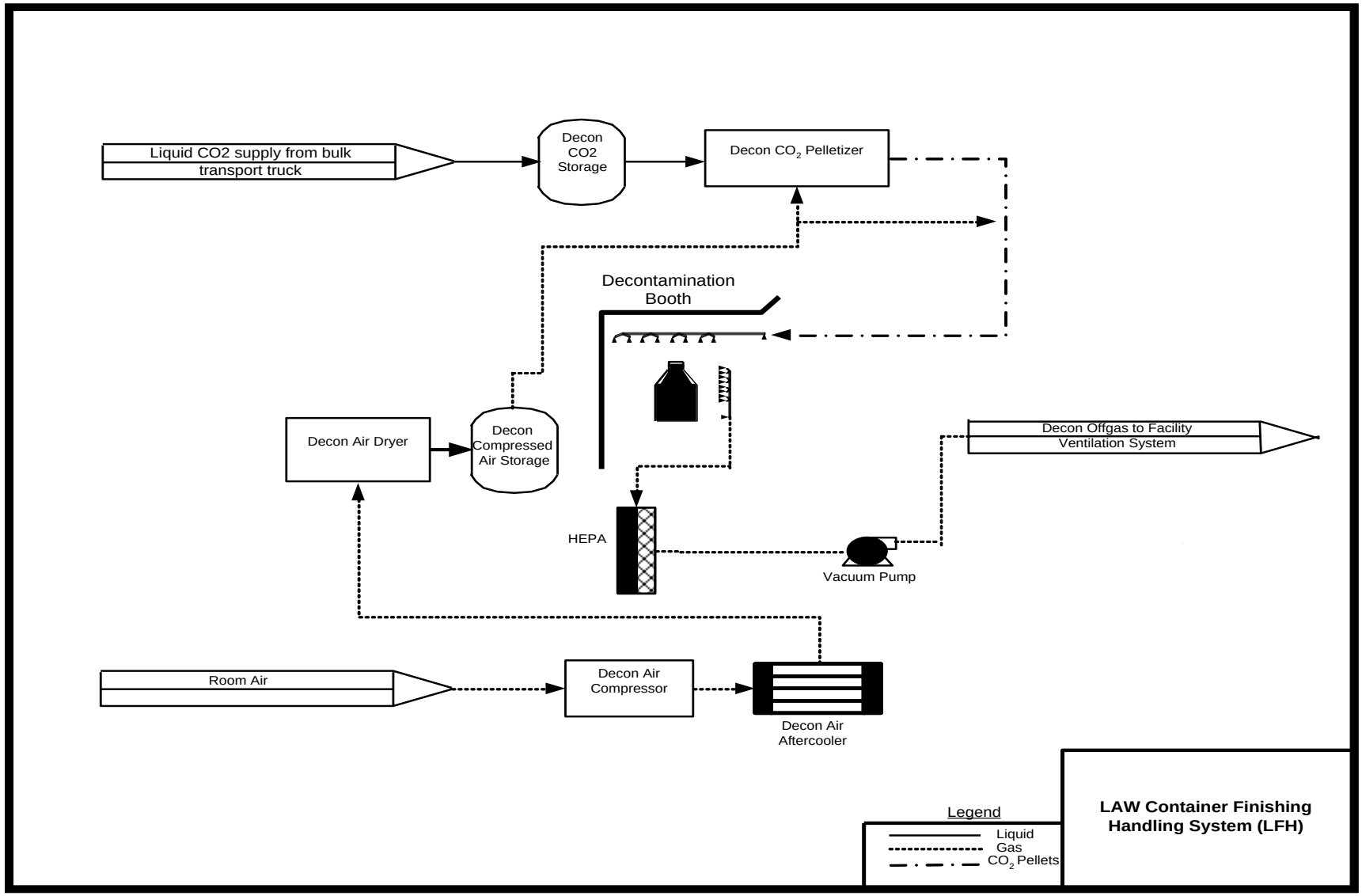

Figure 4A-24 LAW Container Finishing Handling System (LFH)

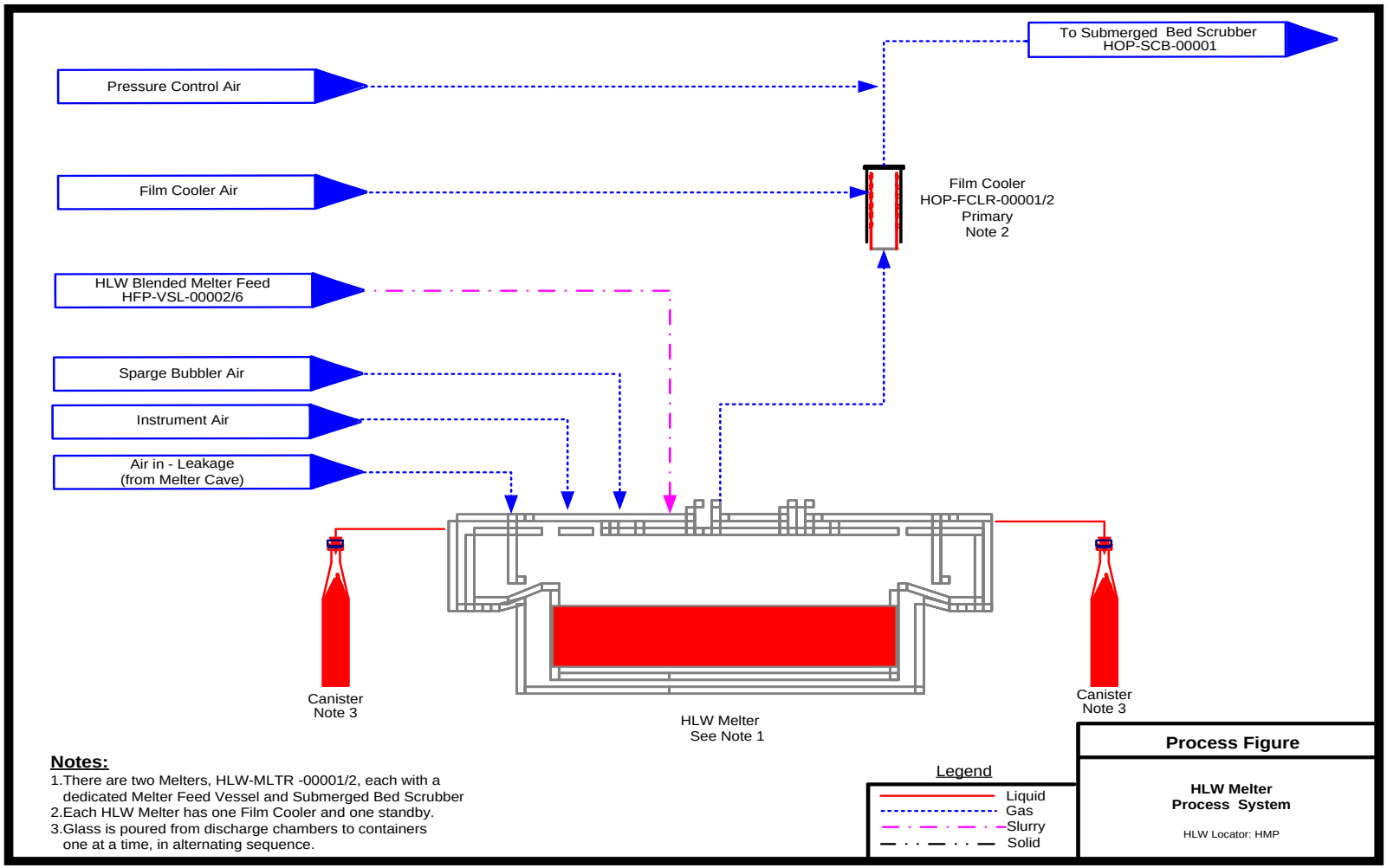

Figure 4A-27 HLW Melter Process System (HMP)

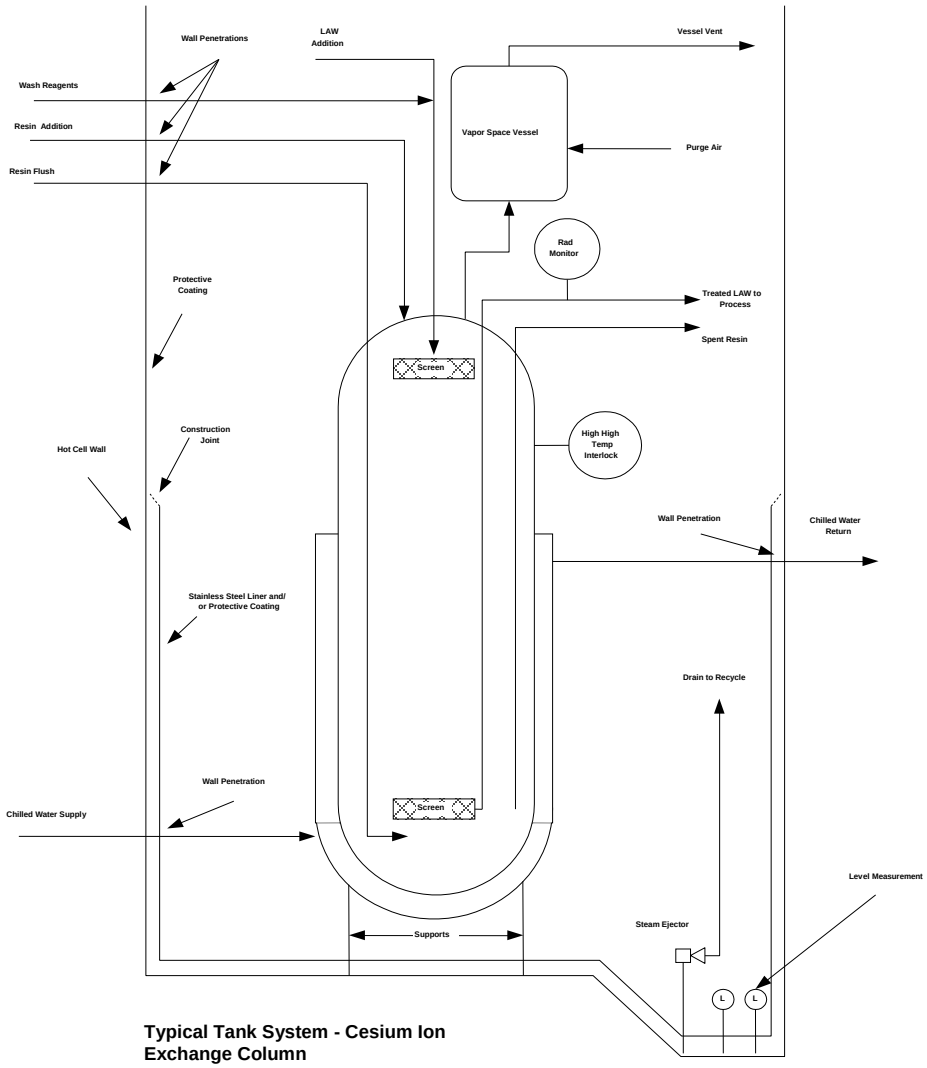

Figure 4A-38 Typical Tank System – Cesium Ion Exchange Column

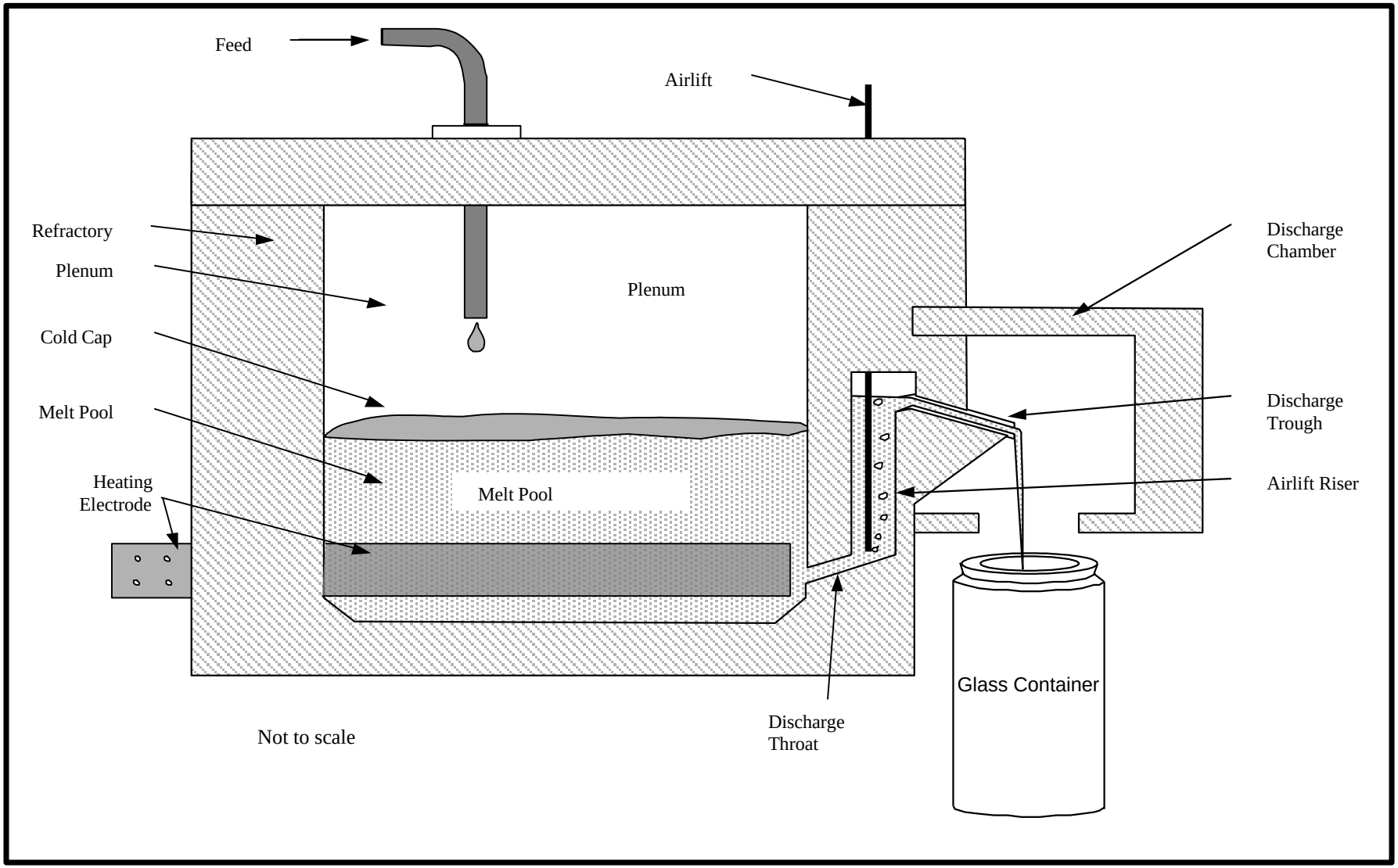

Figure 4A-48 Typical System - LAW Melter Process System (LMP)

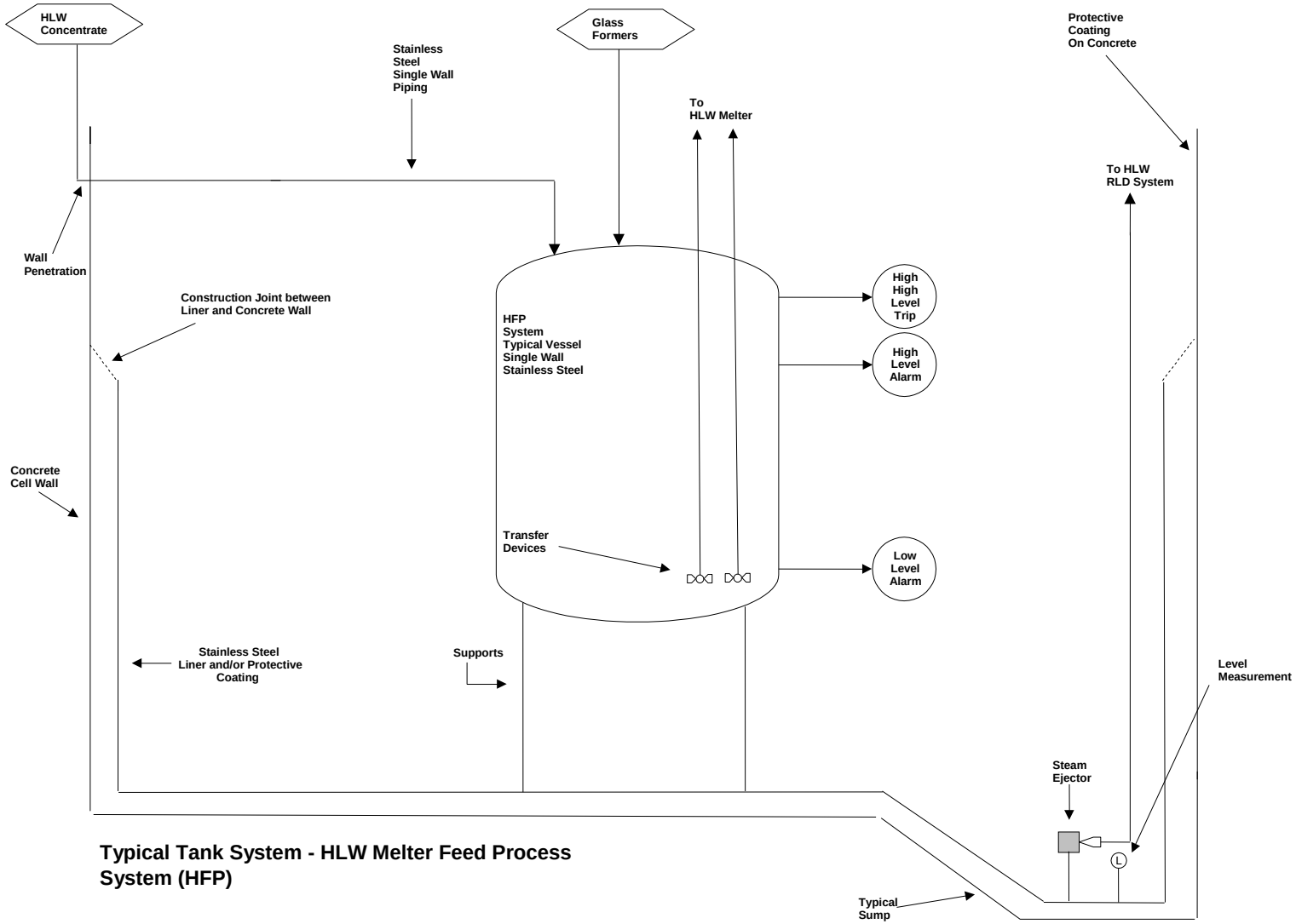

Figure 4A-53 Typical Tank System – HLW Melter Feed Process System (HFP)

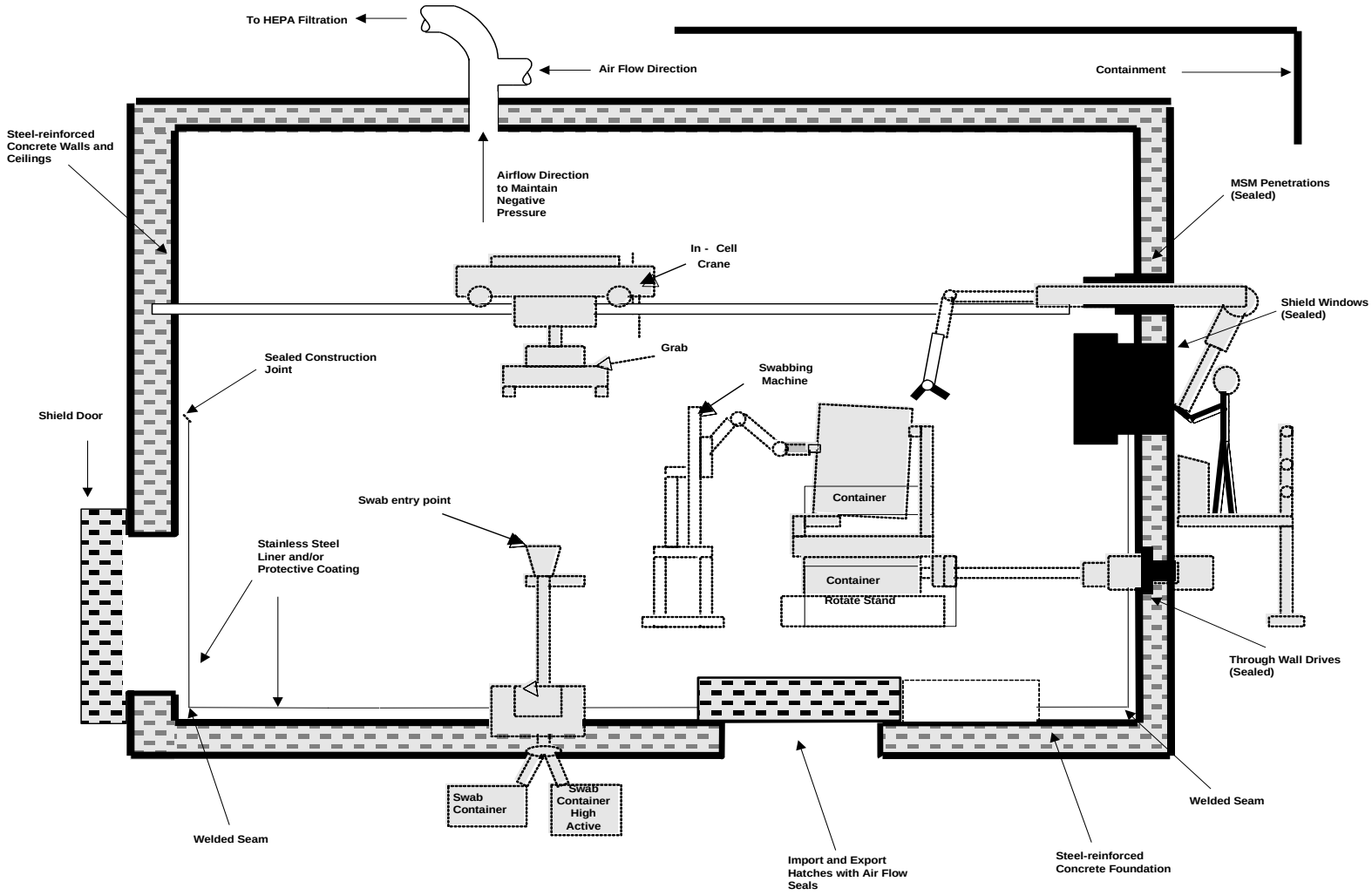

Typical System - Containment Building

Figure 4A-59 Typical System - Containment Building (Sheet 1)

Figure 4A-59 Typical System - Containment Building Typical Design Features Crosswalk (Sheet 2)

Containment Building	Negative Cell Air Pressure	Air Flow to HEPA Filters	SS Liner With Welded Seams	Import / Export Hatch - (Controlled Air Gap)	Shield Windows - (Sealed)	Steel Reinforced Concrete Floor/Foundation	Steel Reinforced Concrete Walls & Ceilings	Through Wall MSMs - (Sealed)	In - Cell Bridge Crane / Monorail	Horiz./Vertical Shield Doors - (Controlled Air Gap)	Miscellaneous In-cell Room Equipment
Pretreatment Plant											
Pretreatment Hot Cell Containment Building (P-0123)	X	X	X	X	X	X	X	X	X	X	X
Pretreatment Maintenance Containment Building											
PM0124 Hot Cell Crane Maintenance Mezzanine	X				X	X	X		X		X
P-0121A Spent Resin Dewatering	X	X		X	X	X	X				X
P-0122A Waste Packaging Area	X	X		X	X	X	X				X
P-0123A Remote Decontamination Maintenance Cave	X	X	X	X	X	X	X		X		X
P-0124 C3 Workshop	X	X		X	X	X	X		X		X
P-012C1 C3 Workshop	X	X		X	X	X	X		X		X
P-0125 Cask Lidding Airlock	X	X		X	X	X	X			X	X
P-0125A Cask Lidding Room	X	X		X	X	X	X		X		X
P-0128A MSM Repair Area	X	X		X	X	X	X				X
P-0128 Temporary Storage Room	X				X	X	X				X
Pretreatment Spent Filter Drum Handling Area Containment Building (P-0223)	X	X				X	X			X	X
Pretreatment Filter Cave Room-Containment Building (P-0335)	X	X	X			X	X			X	X
Pretreatment PJV Secondary HEPA Filter Room Containment Building (P-0431A)	X	X				X	X				

Containment Building	Negative Cell Air Pressure	Air Flow to HEPA Filters	SS Liner With Welded Seams	Import / Export Hatch - (Controlled Air Gap)	Shield Windows - (Sealed)	Steel Reinforced Concrete Floor/Foundation	Steel Reinforced Concrete Walls & Ceilings	Through Wall MSMs - (Sealed)	In - Cell Bridge Crane / Monorail	Horiz./Vertical Shield Doors - (Controlled Air Gap)	Miscellaneous In-cell Room Equipment
LAW Vitrification Plant											
LAW LSM Gallery Containment Building (L-0112)	X	X				X	X			X	X
ILAW Container Finishing Containment Building											
L-0109B Swabbing Cell North Line	X	X		X	X	X	X	X	X	X	X
L-0109C Decontamination Area North Line	X	X		X	X	X	X	X	X	X	X
L-0109D Inert Fill / Welding Area North Line	X	X		X	X	X	X	X	X	X	X
L-0115B Swabbing Cell South Line	X	X		X	X	X	X	X	X	X	X
L-0115C Decontamination Area South Line	X	X		X	X	X	X	X	X	X	X
L-0115D Inert Fill / Welding Area South Line	X	X		X	X	X	X	X	X	X	X
L-0109E Container Monitoring/Export Area - North Line	X	X		X	X	X	X	X	X	X	X
L-0115E Container Monitoring/Export Area - South Line	X	X		X	X	X	X	X	X	X	X
LAW Vit Plant C3 Workshop Containment Building (L-226A)	X	X				X	X		X		X
LAW Consumable Import/Export Containment Building (L-0119B)	X	X				X	X		X		X
LAW Pour Cave Containment Building											
L-B015A Pour Cave (Melter 1)	X	X		X	X	X	X	X	X	X	X
L-B013C Pour Cave (Melter 1)	X	X		X	X	X	X	X	X	X	X
L-B013B Pour Cave (Melter 2)	X	X		X	X	X	X	X	X	X	X
L-B011C Pour Cave (Melter 2)	X	X		X	X	X	X	X	X	X	X
L-B011B (Spare)	X	X		X	X	X	X	X	X	X	X
L-B009B (Spare)	X	X		X	X	X	X	X	X	X	X
ILAW Container Buffer Storage Containment Building											
L-B025C											
L-B025D											

Containment Building	Negative Cell Air Pressure	Air Flow to HEPA Filters	SS Liner With Welded Seams	Import / Export Hatch - (Controlled Air Gap)	Shield Windows - (Sealed)	Steel Reinforced Concrete Floor/Foundation	Steel Reinforced Concrete Walls & Ceilings	Through Wall MSMs - (Sealed)	In - Cell Bridge Crane / Monorail	Horiz./Vertical Shield Doors - (Controlled Air Gap)	Miscellaneous In-cell Room Equipment
HLW Vitrification Plant											
HLW Melter Cave 1 Containment Building:	X	X	X	X	X	X	X	X	X	X	X
H-0117 Melter Cave 1	X	X	X	X	X	X	X	X	X	X	X
H-0116B Melter Cave 1 - C2/C3 Airlock	X	X				X	X			X	
H-0310A Melter Cave 1 Equipment Decon Pit	X	X	X	X	X	X	X	X	X	X	
HLW Melter Cave2 Containment Building:	X	X	X	X	X	X	X	X	X	X	X
H-0106 Melter Cave 2	X	X	X	X	X	X	X	X	X	X	X
H-0105B Melter Cave 2 - C2/C3/ Airlock	X	X				X	X		X	X	
1 H-0304A Melter Cave 2 Equipment Decontamination Area	X	X	X	X	X	X	X	X	X	X	
IHLW Canister Handling Cave Containment Building (H-0136)	X	X	X	X	X	X	X	X	X	X	X
IHLW Canister Swab and Monitoring Cave Containment Building (H-0133)	X	X		X	X	X	X	X	X	X	
C3 Workshop Containment Building:	X	X				X	X				X
C3 Workshop (H-0311A)	X	X				X	X				X
C3 MSM Maintenance Workshop (H-0311B)	X	X				X	X				
HLW Filter Cave Containment Building (H-0104)	X	X		X	X	X	X	X	X	X	X
HLW Waste Handling Area Containment Building:	X	X				X	X				
H-0410B E&I Room	X	X				X	X				
H-0411 Waste Handling Room	X	X				X	X				
HLW Pour Tunnel 1 Containment Building (H-B032)	X	X	X	X		X	X		X		
HLW Pour Tunnel 2 Containment Building (H-B005A)	X	X	X	X		X	X		X		
HLW Drum Swabbing and Monitoring Area Containment Building:	X	X				X	X		X		
H-0126A Crane Maintenance Room	X	X				X	X				
H-0126B Swabbing and Monitoring Room	X	X				X	X				
H-B028 Cask Import/Export Room	X	X				X	X		X		

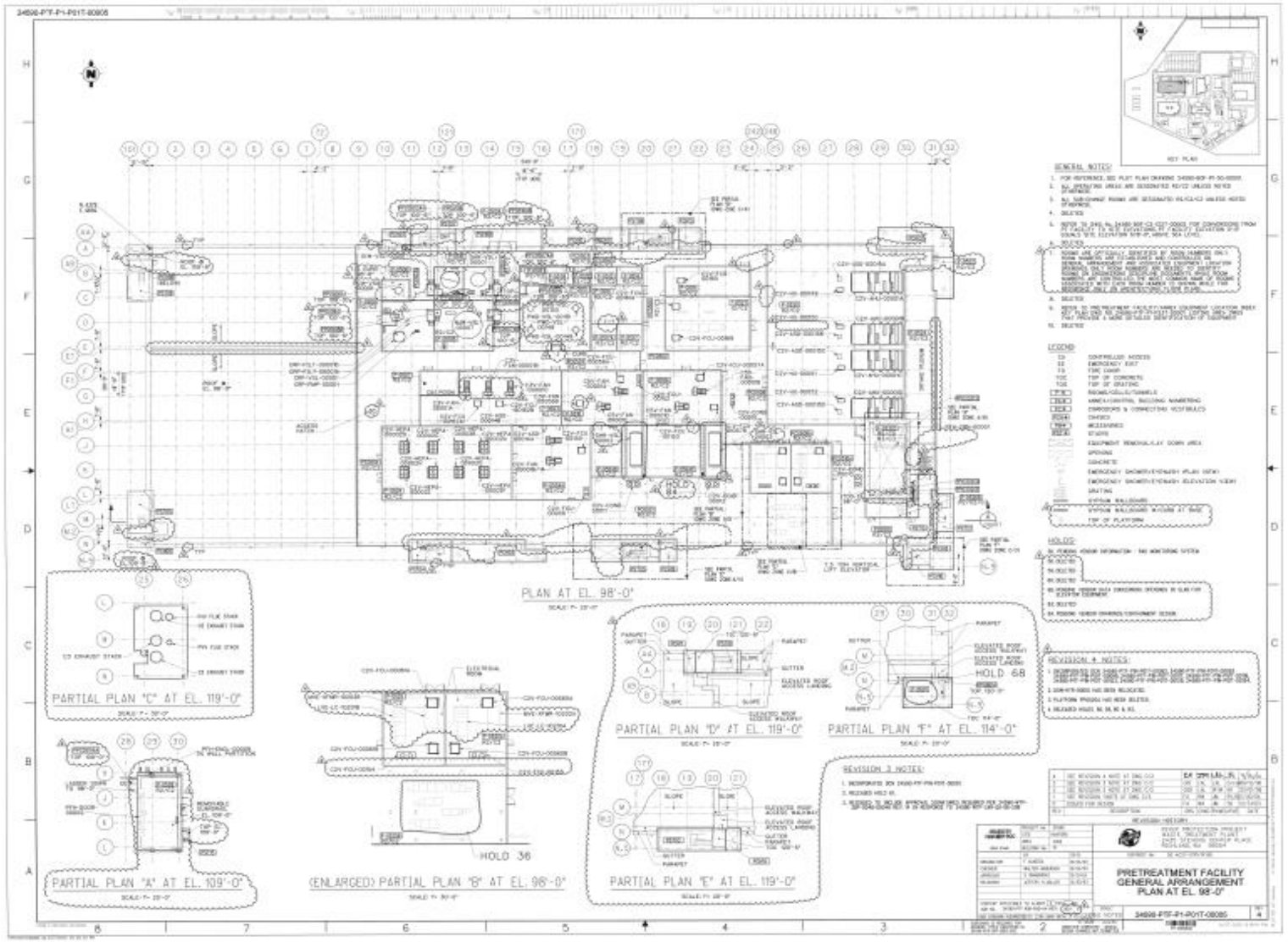

Figure 4A-65 Simplified General Arrangement Pretreatment - Plan at El. 98

Some information, on this page, may appear to be illegible; however, the information necessary for assuring adequate design is legible

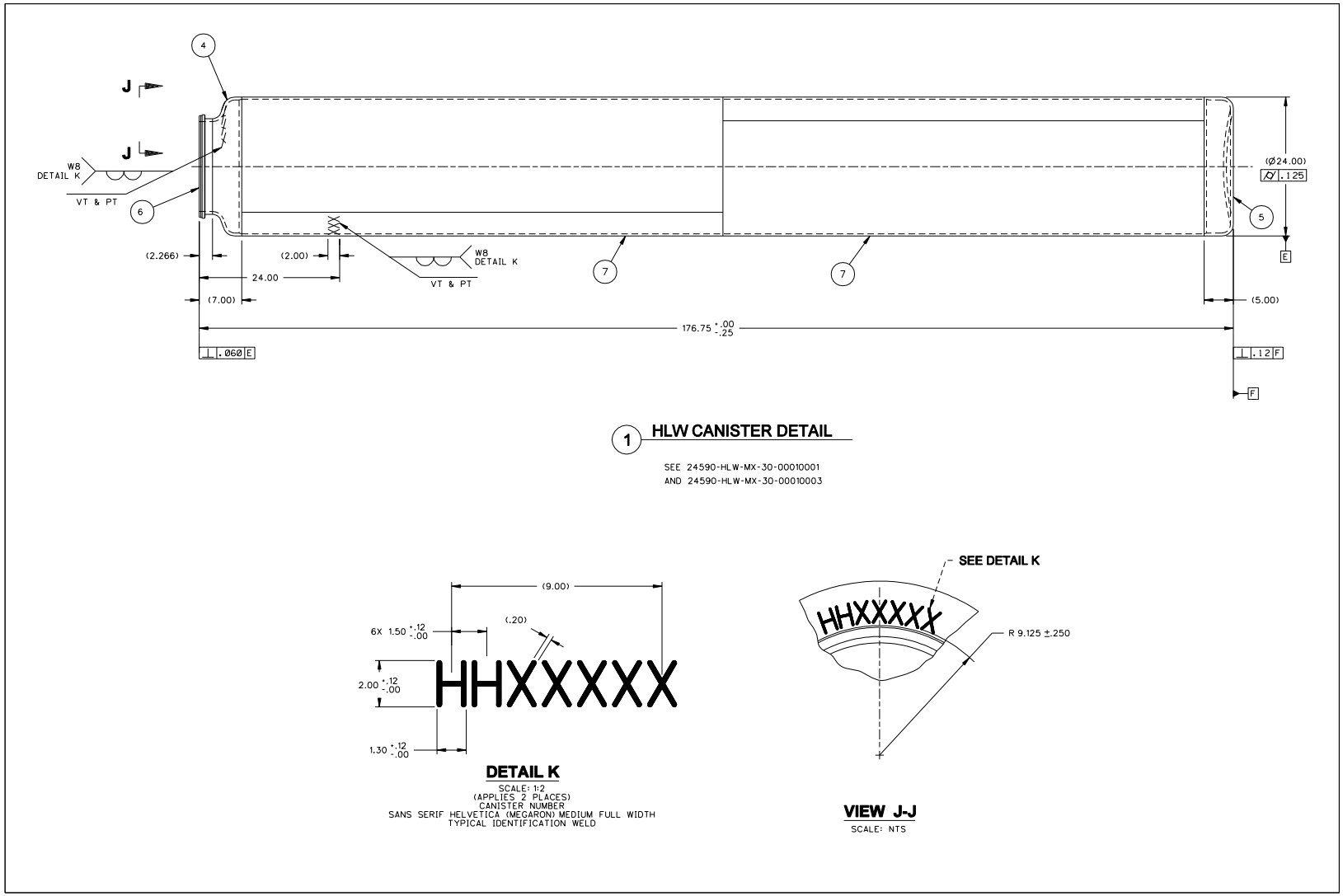

Figure 4A-118 Schematic of an Example IHLW Container and Label

Some information, on this page, may appear to be illegible; however, the information necessary for assuring adequate design is legible

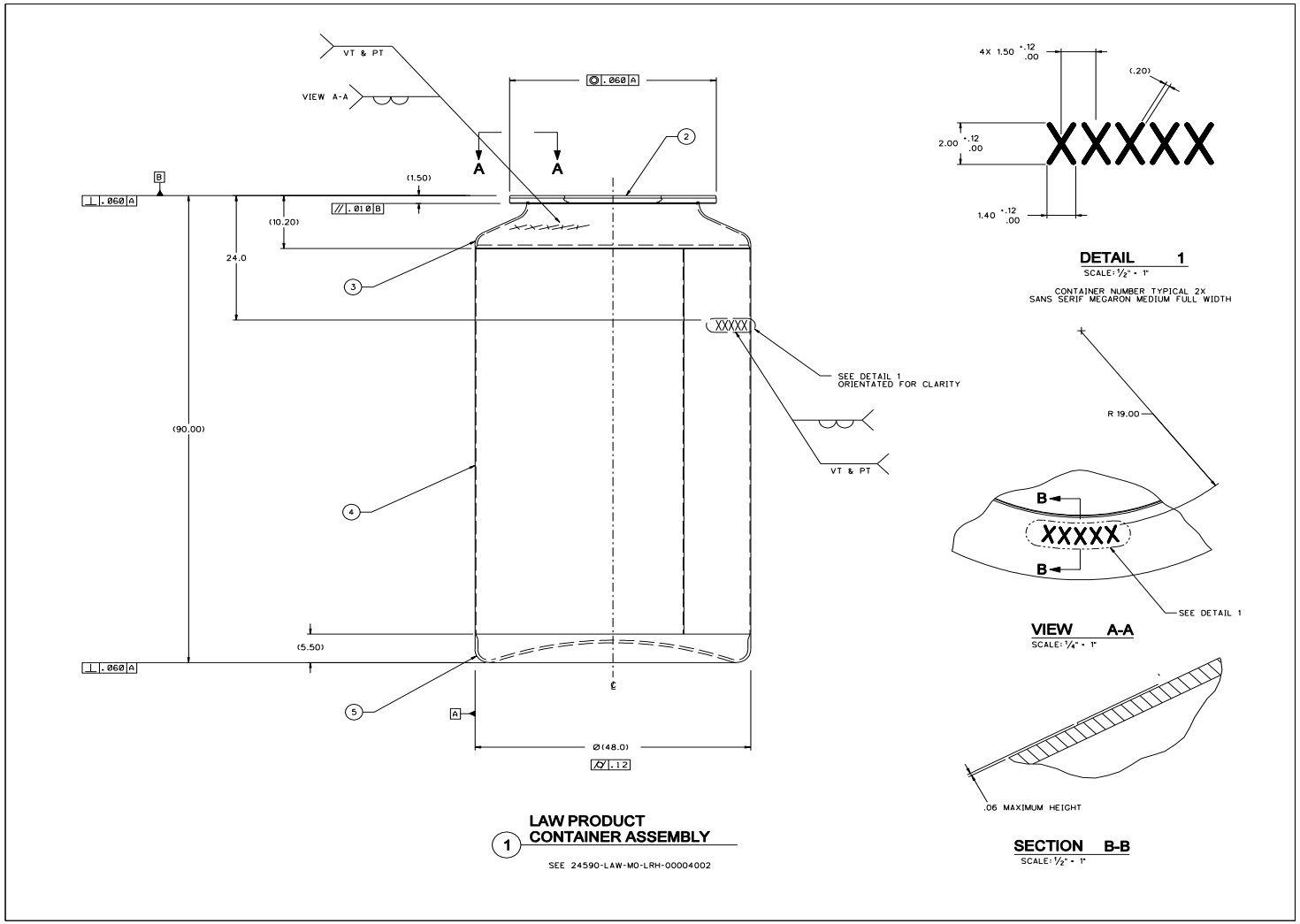

Figure 4A-119 Schematic of an Example ILAW Container and Label

Some information, on this page, may appear to be illegible; however, the information necessary for assuring adequate design is legible

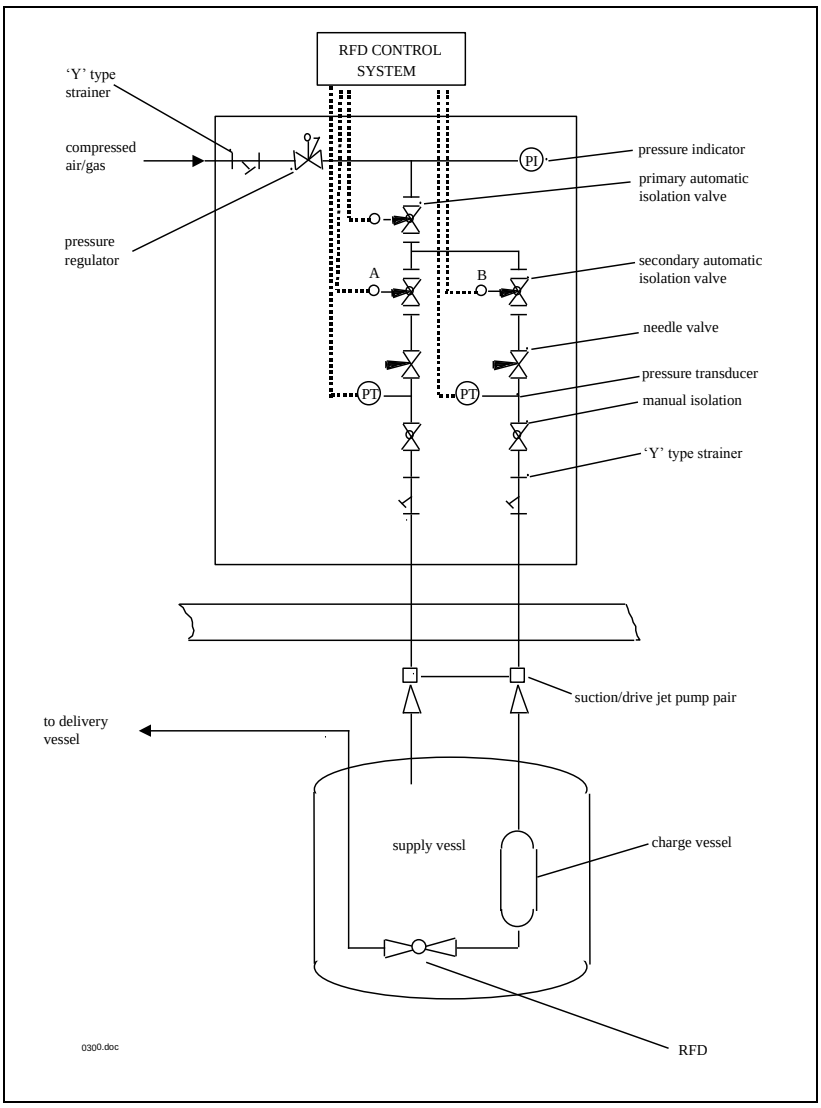

Figure 4A-120 Typical Arrangement of a Reverse Flow Diverter

Some information, on this page, may appear to be illegible; however, the information necessary for assuring adequate design is legible

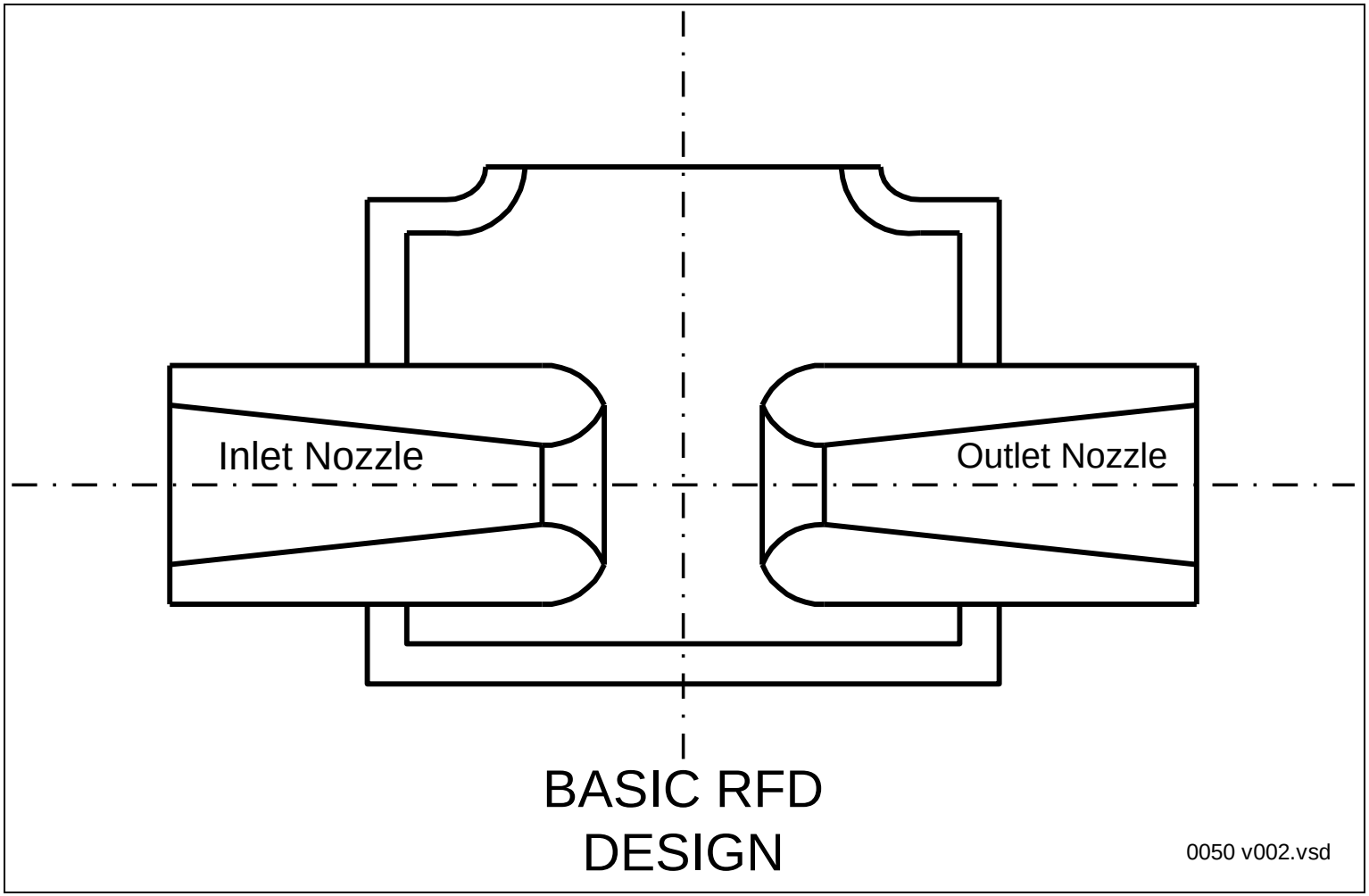

Figure 4A-121 Basic Reverse Flow Diverter Design

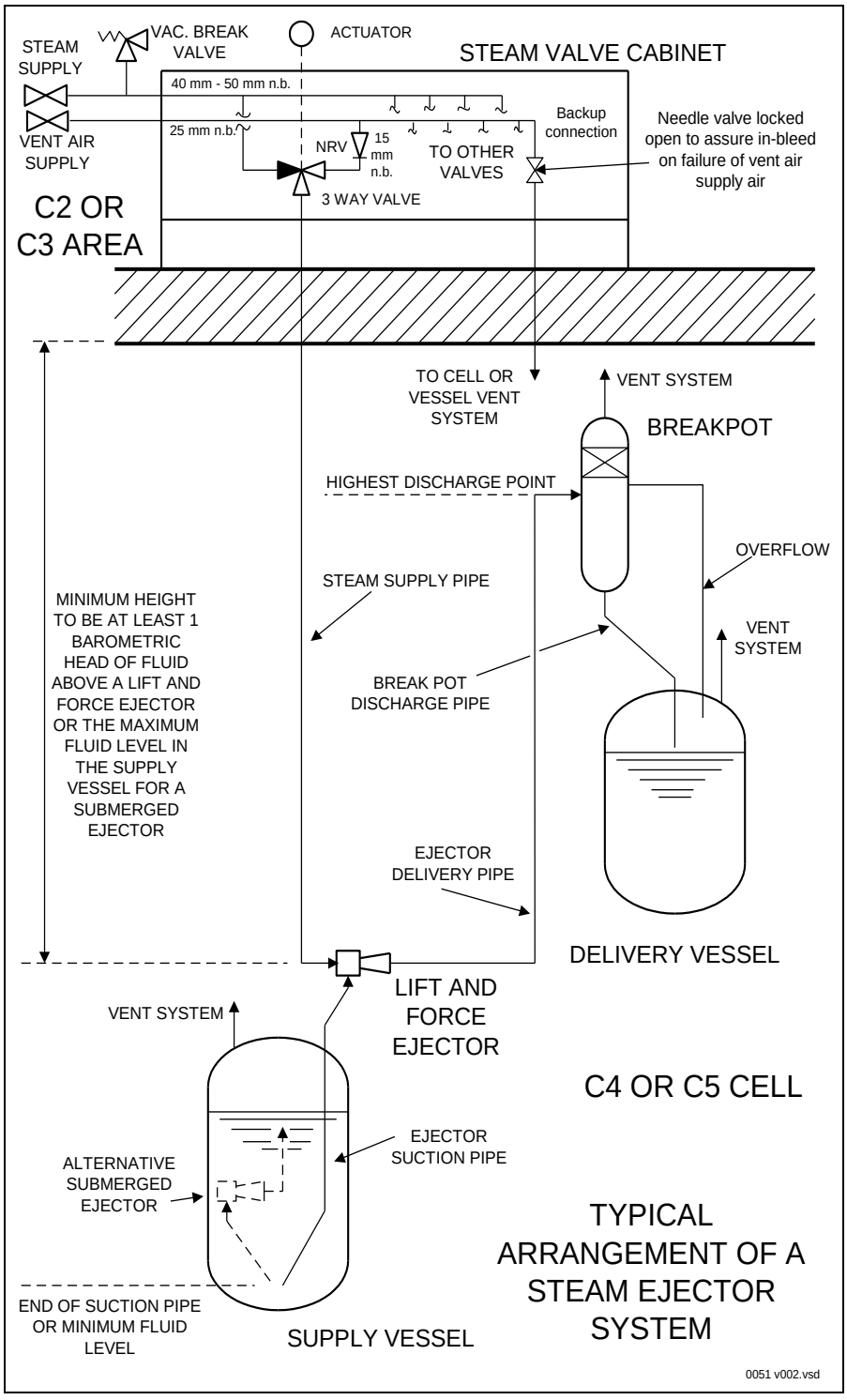

Figure 4A-122 Typical Arrangement of a Steam Ejector System

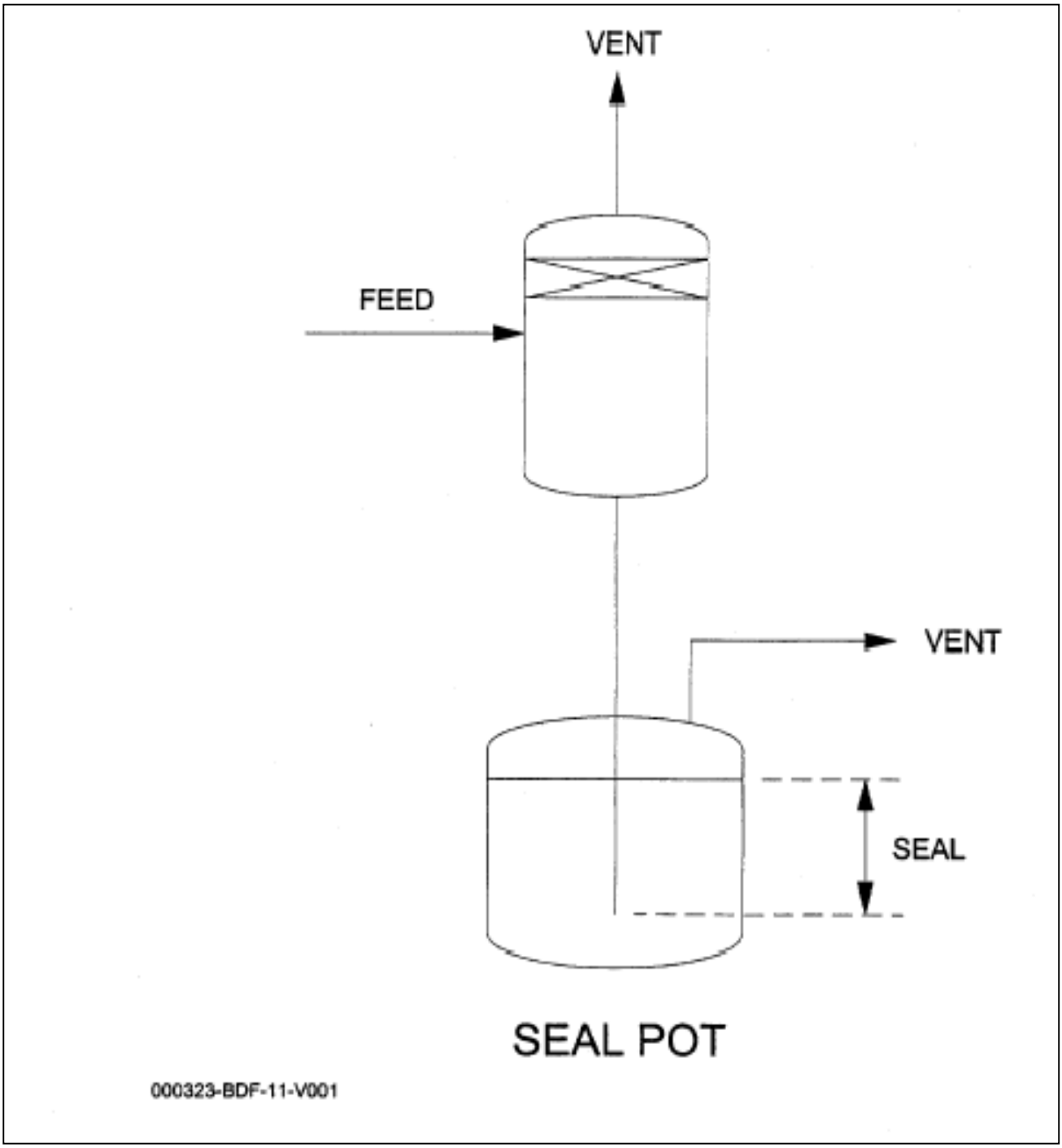

Figure 4A-123 Typical Seal Pot Arrangement

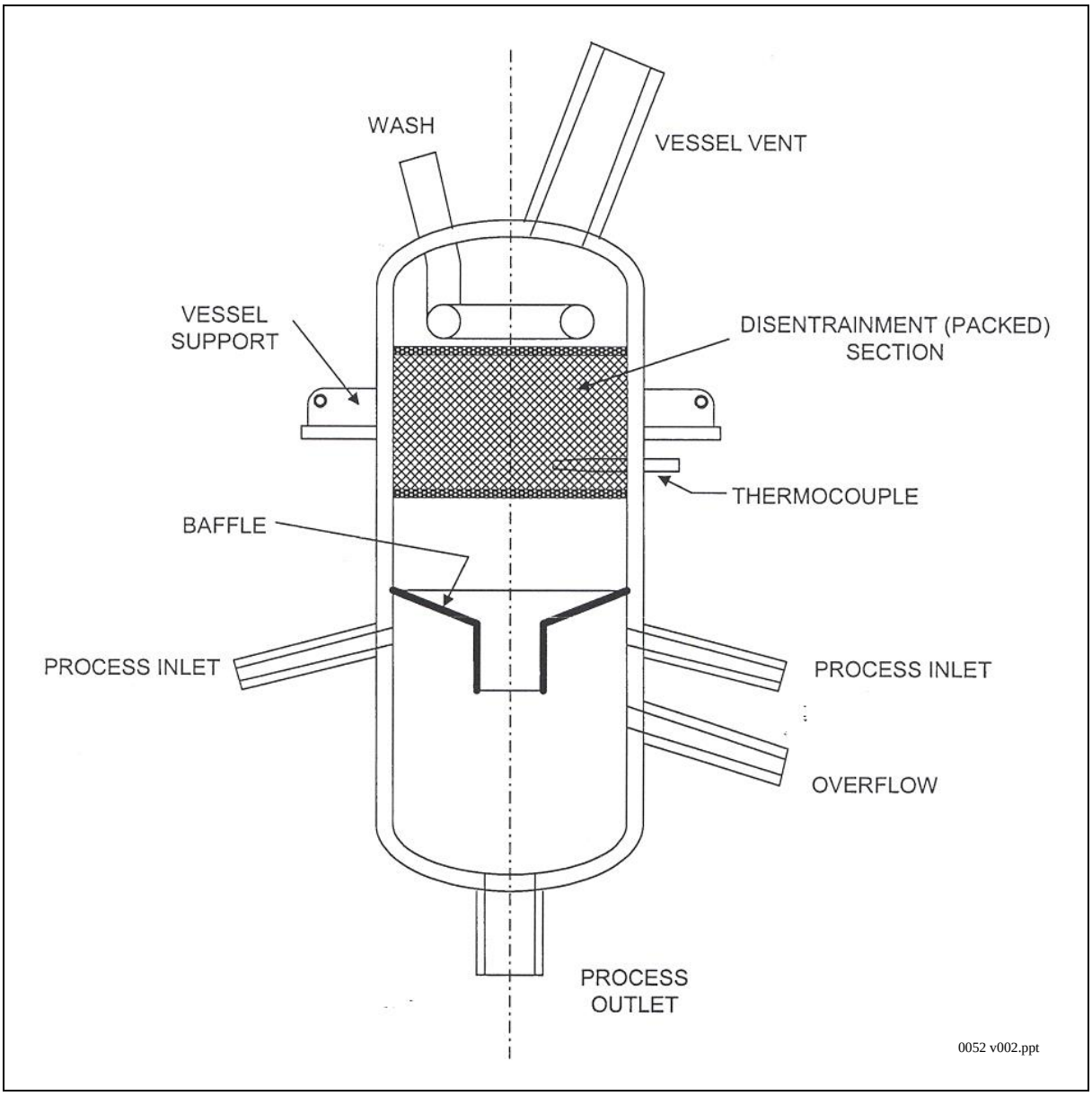

Figure 4A-124 Typical Breakpot Arrangement

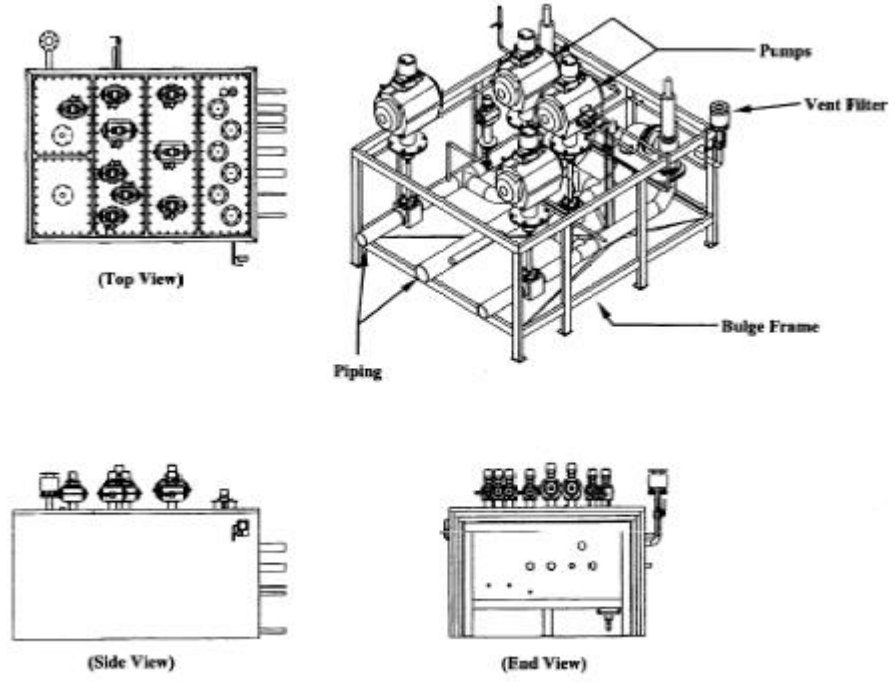

Figure 4A-127 Typical Bulge Configuration

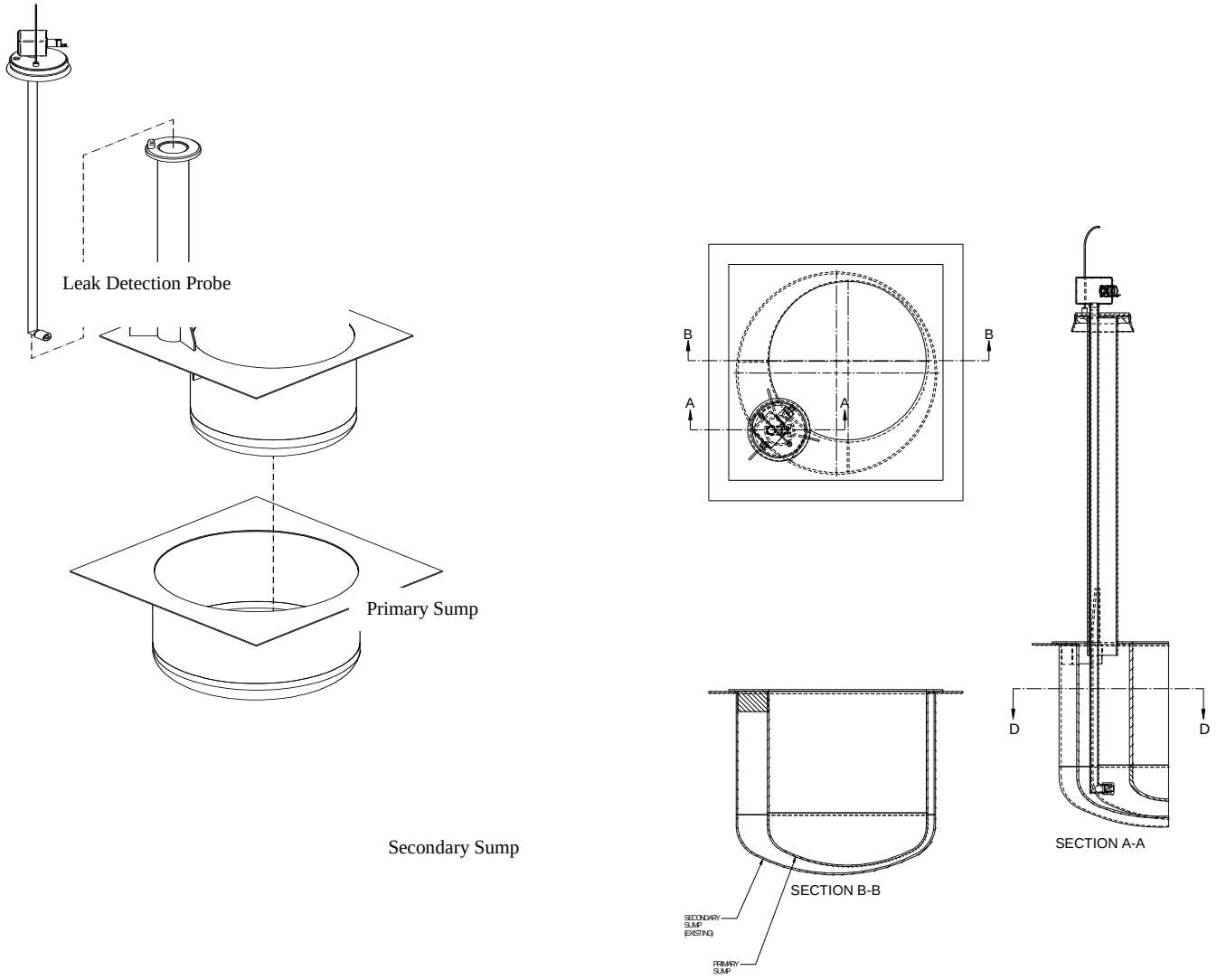

FIgure 4A-128 Typical Primary Containment Sump Conceptual Design

This page intentionally left blank.

APPENDIX 4E
LOW-ACTIVITY WASTE (LAW) VITRIFICATION FACILITY

This page intentionally left blank.

APPENDIX 4E
LOW-ACTIVITY WASTE (LAW) VITRIFICATION FACILITY

TABLE OF CONTENTS

4E LOW-ACTIVITY WASTE (LAW) VITRIFICATION FACILITY 1
4E.1 Containers 2
4E.1.1 Description of Containers 3
4E.1.2 Container Management Practices 4
4E.1.2.1 ILAW Containers 4
4E.1.2.2 Waste Tracking 6
4E.2 Tank Systems 9
4E.2.1 LAW Melter Feed Process 10
4E.2.2 LAW Melter Process (LMP) System 13
4E.2.3 Radioactive and Nonradioactive Liquid Waste Disposal (RLD and NLD) Systems 16
4E.2.4 LAW Radioactive Solid Waste Handling (RWH) System 19
4E.2.5 ILAW Glass Container Handling 20
4E.2.6 LAW Melter Equipment Support Handling (LSH) System 25
4E.2.7 LAW Melter Handling (LMH) System 26
4E.3 Containment Buildings 26
4E.3.1 LAW LSM Gallery Containment Building (L-0112) 27
4E.3.2 ILAW Container Finishing Line Containment Building (L-0109B, L-0109C, L-0109D, L-0109E, L-0115B, L-0115C, L-0115D, L-0115E) 29
4E.3.3 LAW Consumable Import/Export Containment Building (L-0119B) 32
4E.3.4 LAW C3 Workshop Containment Building (L-0226A) 34
4E.3.5 LAW Pour Cave Containment Building (L-B009B, L-B011B, L-B011C, L-B013B, L-B013C, L-B015A) 36
4E.3.6 LAW Container Buffer Storage Containment Building (L-B025C, L-B025D) 37
4E.4 Air Emission Control 39
4E.4.1 LAW Vitrification Facility Ventilation 39
4E.4.2 LAW Melter Offgas System 41
4E.4.2.1 LAW Primary Offgas Process (LOP) System 43
4E.4.2.2 LAW Secondary Offgas/Vessel Vent Process (LVP) System 45

TABLES

Table 4E-1 LAW Vitrification Facility Tank Systems 49
Table 4E-2 LAW Vitrification Facility Miscellaneous Units (Systems and Sub-Systems) 51
Table 4E-3 LAW Vitrification Facility Secondary Containment Rooms/Areas 54

Table 4E-4 LAW Vitrification Facility Sumps, Leak Detection Boxes, and Floor Drains/Lines 55
Table 4E-5 LAW Vitrification Facility Containment Buildings Summary 59

This page intentionally left blank.

4E Low-Activity Waste (LAW) Vitrification Facility

~~The purpose of this appendix is to describe the major systems associated with the LAW vitrification facility.~~This appendix describes the WTP Low-Activity Waste (LAW) vitrification facility, including processes and systems associated with management of tank systems, miscellaneous units, and containment buildings. The LAW vitrification facility has major processes, systems, permitted tanks, miscellaneous units (MUs), containment building units, and support systems. Figure 4A-3 located in Appendix 4A presents a simplified process flow diagram of the LAW vitrification processes. ~~This~~The LAW vitrification facility ~~will consist of several process~~processes and systems ~~designed to~~ perform the following functions:

- Receive and store pretreated LAW feed.
- Convert blended LAW feed and glass formers into glass.
- ~~Provide melter offgas treatment systems.~~
- Treat melter offgas.
- Handle ILAW containers.
- Store ILAW containers.
- Provide supporting equipment in the melter gallery.
- Handle miscellaneous secondary waste.
- Ventilate the LAW vitrification facility.

The following figures located in Appendix 4A and drawings found in DWP Operating Unit Group 10, Appendix 9, provide additional detail for the LAW vitrification facility:

- Simplified flow diagrams for the WTP and the LAW vitrification facility.
- Process flow figures and drawings for process information.
- Typical system figures depicting common features for each regulated system.
- General arrangement figures and drawings showing locations of regulated equipment.
- Waste management area figures and drawings showing facility locations to be permitted.

Instrumentation, alarms, controls, and interlocks will be provided for the tank systems and miscellaneous treatment unit sub-systems to indicate or prevent the following conditions, as appropriate:

- Overfilling: Plant items are protected against overfilling by liquid level indication, high level instrumentation interlocks to shut off feed sources, and process control system control functions backed up by hard wired trips as required.
- Loss of containment: Plant items are protected against containment loss by liquid level indication, ~~and by~~ process control system control and alarm functions as required, including shut off of feed sources. Tanks ~~or~~and miscellaneous units (MUs) that manage liquid mixed and/or dangerous waste ~~is~~are provided with secondary containment. Ancillary equipment and miscellaneous unit ancillary equipment ~~is~~are provided with secondary containment or ~~is~~are visually inspected for leaks on a daily basis in accordance with WAC 173-303-640(4)(f). Some LAW vitrification facility tanks and/or MUs utilize daily visual ~~inspection~~inspections for leak detection. Sumps associated with the

management of mixed and/or dangerous waste are provided with liquid level instrumentation and an ejector or pump to empty the sump as needed.

- Inadvertent transfers of fluids: System sequential operations are properly interlocked to prevent inadvertent transfers at the wrong time or to the wrong location.
- Loss of mixing function: Tank systems are instrumented (air pressure/flow indication) to prevent hydrogen accumulation and solids settling. Tanks with agitators are instrumented to prevent agitator and/or vessel damage at low liquid level.
- Unsafe or off-normal melter operating conditions.
- Degraded emissions control equipment and/or operating conditions.
- Loss of air flow: The ventilation systems are designed to create a pressure gradient which causes air to flow through engineered routes from an area of lower contamination potential to an area of higher contamination potential.
- Loss of site power.

In addition to level control, temperature and pressure may be monitored for tank systems and miscellaneous treatment unit systems in some cases. Additional information may be found in the system logic descriptions located in DWP Operating Unit Group 10, Appendix 9.13. Regulated process and leak detection system instruments and parameters will be provided in DWP Table III.10.E.F for tank systems and in DWP Table III.10.H.C for miscellaneous treatment unit sub-systems.

Descriptions of the LAW vitrification process, melter offgas treatment systems, and ILAW glass container handling systems are provided in Sections 4E.2 through 4E.4. Table 4E-1 lists current tank design information (capacity, materials of construction, and dimensions). Table 4E-2 lists the current miscellaneous unit design information. The tanks and miscellaneous units are grouped by process systems in these tables.

Tanks or miscellaneous units that manage liquid mixed or dangerous waste are provided with secondary containments. Table 4E-3 summarizes the secondary containment rooms/areas and calculated minimum liner heights. Sumps, leak detection boxes, and secondary containment drain systems are listed in Table 4E-4.

4E.1 Containers

~~This section identifies the containers and container management practices that will be followed at the LAW vitrification facility. The term "container" is used as defined in Washington Administrative Code (WAC) 173-303-040. Note that in this appendix and throughout the permit, terms other than containers may be used, such as canisters, boxes, bins, flasks, casks, and overpacks.~~

~~The following sections address waste management containers:~~

- ~~Description of Containers - Section 4E.1.1~~
- ~~Container Management Practices - Section 4E.1.2~~
- ~~Container Labeling - Section 4E.1.3~~
- ~~Containment Requirements for Storing Waste - Section 4E.1.4~~
- ~~Prevention of Ignitable, Reactive, and Incompatible Wastes in Containers - Section 4E.1.5~~

The LAW Vitrification Facility does not have permitted container storage areas. The dangerous and mixed waste generated at the LAW Vitrification Facility is managed in containment buildings, as described in section 4E.3. In addition, containerized secondary waste is managed in 90-day accumulation areas and satellite accumulation areas pursuant to the requirements in WAC 173-303-200, generating dangerous waste on-site. All waste anticipated to be dangerous or mixed waste is managed in accordance with WAC 173-303-170, requirements for generators of dangerous waste, through WAC 173-303-230, special conditions. The dangerous and mixed waste is labeled and characterized in accordance with requirements in WAC 173-303-070, designation of dangerous waste. Information on all 90-day accumulation areas and satellite accumulation areas is maintained as required in the Hanford Dangerous Waste Permit, Part II General Facility Conditions, permit condition III.I.1.a.

4E.1.1 Description of Containers

~~These~~The following types of waste will be managed in containers:

- ILAW (immobilized glass)
- Miscellaneous mixed waste (secondary waste)
- Miscellaneous nonradioactive dangerous waste (secondary waste)

The waste form dictates the type of containers used for waste management. ~~-~~The following ~~paragraphs describe these types~~are examples of ~~containerized~~the generated secondary waste

- Spent or failed equipment
- Offgas HEPA filters
- Spent maintenance materials
- Melter consumables
- Personal Protective Equipment

~~that are managed at the LAW vitrification facility.: Immobilized Glass Waste~~

~~The immobilized glass waste is a mixed waste that will be managed in ILAW containers specially designed to remain stable during receipt of glass waste, and which are capable of remote handling.~~

~~The ILAW containers will be approximately 90 inches (in.) high and 48 in. in diameter, with a wall thickness of approximately 0.187 in. and a nominal capacity of 90 cubic feet (ft^3). ILAW containers will be constructed of austenitic (304L) stainless steel.~~

~~Miscellaneous Mixed Waste~~

~~Generally, miscellaneous mixed wastes are secondary wastes that may include, but are not limited to, the following items:~~

- ~~Spent melters~~

~~Spent equipment and offgas filters will typically be managed in commercially-available containers such as steel drums or steel boxes, of varying size. The containers for miscellaneous mixed waste will comply with transportation requirements, with receiving treatment, storage, and disposal (TSD) facility waste acceptance criteria, and will be compatible with the miscellaneous mixed waste. These containers may or may not include a liner. Final container selection, container and waste compatibility, and the need for liners, will be based on the physical, chemical, and radiological properties of the waste being managed.~~

~~Melter consumables are routinely generated wastes and include spent feed tubes, pressure transducers, bubblers, thermocouples, and discharge risers. LAW melter consumables will be placed into approved disposal containers of varying size.~~

~~The LAW Locally Shielded Melter (LSM) will be classified as hazardous debris for land disposal restrictions purposes. After a spent melter is deemed to meet criteria and regulations for onsite disposal, it will be placed in a welded carbon steel container (overpack) or other acceptable packaging in accordance with waste acceptance criteria for the receiving TSD facility. Regulatory issues and permitting actions associated with onsite disposal of spent and/or failed melters will be addressed in the future.~~

~~Each miscellaneous mixed waste container will have associated documentation that describes the contents, such as waste type, physical and chemical characterization, and radiological characterization. This information will be retained within the plant information network.~~

~~Most miscellaneous secondary mixed wastes will be spent equipment and consumables such as pumps, air lances, HEPA filters, etc., and are not expected to contain liquids. If wastes are generated that contain liquids, these wastes may be treated to remove or absorb liquids, to comply with the receiving TSD facility waste acceptance criteria.~~

~~Miscellaneous Nonradioactive Dangerous Waste~~

~~Each nonradioactive dangerous waste container will have associated documentation that describes the contents, such as waste type and physical and chemical characterization. Typically, commercially available containers will be used. The types of containers used for packaging nonradioactive dangerous waste will comply with the receiving TSD facility waste acceptance criteria and transportation requirements. However, final container selection, container and waste compatibility, and the need for liners will be based on the physical and chemical properties of the waste being managed.~~

4E.1.2 Container Management Practices

The following paragraphs describe how each of the containers used at the LAW vitrification facility are managed.

4E.1.2.1 ~~Immobilized Glass Waste~~ILAW Containers

Immobilized glass waste ILAW containers will be moved remotely due to the high radiation content of the waste. A brief discussion of how the containers move through the WTP is presented below~~.~~

~~ILAW Containers~~

An empty container will be transported to a LAW glass pour cave and placed on a turntable designed to hold three containers. There are two LAW pour caves at each melter, each with the capacity to manage three containers at a time. The container will be sealed to the melter discharge with a pour head connection. The glass waste will fill the container during the course of approximately 10 hours.

The filled ILAW container will be lowered back onto the turntable. The filled container will cool for 10 to 30 hours to reach glass transition temperature (approximately 400°C to 500°C), which characterizes the transformation from an equilibrated melt to a "frozen" glass structure. At this stage, the waste glass does not contain liquid and is in a viscous state that ultimately stabilizes to a solid. Once the container has cooled, it will be rotated to the transfer position. The container will then be lifted by a remotely operated monorail hoist, moved to the transfer tunnel, lowered onto a container transfer bogie, and transported to a position within the transfer tunnel below the finishing line. In the event the finishing line becomes backed up, the container may be transported to the LAW container buffer storage containment building. The containers will not be stacked.

The container will be transported to the LAW container finishing line (see Section 4E.3), where the level of waste glass will be measured and additional inert filler will be added, if needed.

A sample of the glass may also be collected in this location prior to inert filling. Glass within the neck of the container will be removed by abrasion and the lid will be attached to the container. The debris generated from residual glass removal will be collected with a vacuum system and disposed of as a secondary waste.

After the lid is mechanically sealed, the container will be moved to the decontamination cell where contamination will be removed. Using a turntable, the container will revolve while a power manipulator tracks the entire surface with decontamination equipment. The dry decontamination process will use carbon dioxide pellets. The container will then be transported to the swabbing cell, where its surface will be swabbed. The radiation levels of the swab will be remotely monitored, and the results will determine whether the ILAW container will be ready for transportation to the disposal site, or go through decontamination again.

Other ILAW Container Storage Requirements

As stated in WAC 173-303-630(5)(c), a 30 in. separation is required between aisles of containers holding dangerous waste~~.~~ in permitted container storage areas. In addition, WAC 173-303-340(3) requires a 30 in. separation to allow unobstructed movement of personnel, fire protection equipment, spill control equipment, and decontamination equipment in an emergency.

Evaluation of the 30-in. aisle spacing requirement by the United States Department of Energy (DOE), WTP, the United States Environmental Protection Agency (EPA), and the Washington State Department of Ecology (Ecology) for ILAW containers concluded that aisle spacing in the range of 4 to 16 in. was adequate based on the following factors:

- Personnel access into the immobilized glass canister storage cave will be restricted. High radiation dose rates from immobilized glass waste canisters will preclude personnel entry into the process and storage areas, and inspection of the ILAW containers will be performed remotely. (See Operating Unit Group 10, Chapter 6.0 for the inspection approach.)
- Water-based fire suppression systems will not be used in the ILAW container buffer storage containment building. Because of its inert nature, the glass waste will present a low fire hazard, and a minimal amount of combustible material will be present. The only potentially combustible material that may be present in the immobilized glass waste canister storage cave is insulation on crane motors and associated cables. To ensure no water is introduced into the canister storage cave, a dry chemical fire suppressant system may be installed.
- Spill control equipment will not be necessary within the ILAW container buffer storage containment building. Spills or leaks from the stored canisters will not occur because the glass waste will be in a solid form and will not contain free liquid. The glass transition temperature characterizes the transformation from an equilibrated melt to a "frozen" glass structure.

The ILAW containers will be stored in a storage rack to allow airflow. No stacking of the ILAW containers will occur. Closed circuit television cameras will enable general viewing of both areas.

~~Miscellaneous Nonradioactive Dangerous Waste Containers~~

~~Miscellaneous dangerous waste containers will typically be managed in non-permitted waste management units (satellite accumulation areas and less-than-90-day storage areas) located throughout the LAW vitrification facility. Containers will be kept closed unless waste is being added, removed, or sampled.~~

~~They will routinely be moved by forklift or drum cart, and will be managed in a manner that prevents ruptures and leaks.~~

4E.1.2.2 Waste Tracking

The plant information network interfaces with the integrated control network and is designed to collect and maintain plant information. The plant information network is currently planned to the following systems (all systems used at the plants/facilities and balance of facilities are provided for information only):

- Plant data warehouse and reporting system
- Laboratory information management system
- Waste tracking and inventory system

Inventory and Batch Tracking

The waste tracking and inventory system will interface with the information system data historian to provide reporting information such as tank volumes, waste characteristics, and facility inventories of process waste. The waste tracking system will also be used to query operations parameters at any time information is needed, as specified by operations, to manage the process system. ILAW containers will be tracked within the facility using an operations developed system: for example, manually recording on a board, manually inputting into the information network, or if available, automated through the integrated control network.

Secondary Waste Stream Tracking

Containerized secondary waste streams and equipment will be tracked and managed through commercially available database management software. Containers will be mapped in each plant and updated during the inspection process using a commercially available drawing software application.

Laboratory Information Management System

The laboratory information management system (LIMS) will be an integral feature of the plant information network. The LIMS will serve as an essential tool for providing data management of regulatory and processing samples. The chosen LIMS will be a commercial off-the-shelf software package designed for performing laboratory information management tasks as described in ASTM E1578-93, *Standard Guide for Laboratory Information Management Systems (LIMS)*.

The LIMS will track the flow of samples through the laboratory. Samples received in the laboratory will be identified with a unique identification label. The identification label provides details of the sample process stream. Baseline analyses are defined by the requesting plant. Additional analyses, as required, will be input into LIMS by laboratory analysts. Data will be input into LIMS manually or by data transfer using LIMS/instrument interface. Analyses will be performed using approved and validated analytical procedures.

Analytical results will be compiled by the LIMS and held pending checking and approval by appropriate staff. Approved results will be reported to the requesting plant.

~~**4E.2 Container Labeling**~~
~~**4E.3 Immobilized Waste Glass Containers**~~
~~**4E.4 Due to the radioactivity and handling requirements of the immobilized waste containers, conventional labeling of the immobilized waste containers will not be feasible and an alternative to the standard labeling requirements will be used. This alternative**~~

labeling approach will use a unique numeric identifier for the ILAW container that will be welded onto each immobilized glass waste container.

4E.5 The welded "identifier" will ensure that the number is always legible, will not be removed or damaged during container handling, will not be damaged by heat or radiation, emits no gas upon heating when waste glass enters the container, and will not degrade over time.

4E.6 The identifier will be welded onto the shoulder and side wall of each immobilized glass container at two locations approximately 180 degrees apart. Characters will be approximately 2 in. high by 1.5 in. wide. The identifier will be formed by welding on stainless steel filler material at the time of container fabrication. This identifier will be used to track the container from receipt at the WTP, throughout its subsequent path at the WTP, until it leaves the plant to be disposed or stored.

4E.7 Each identifier will be unique. This unique number will be maintained within the plant information network and will list data pertaining to the waste container including waste numbers and the major risk(s) associated with the waste.

4E.8 Personnel access into the immobilized glass waste container storage areas will be limited and controlled administratively. Signs designating the hazards associated with the immobilized waste glass will be posted at appropriate locations outside the container storage areas.

4E.9 Miscellaneous Mixed Waste Containers

4E.10 The miscellaneous mixed waste containers will be labeled with the accumulation or generation start date, as appropriate, the major risk(s) associated with the waste, and the words "hazardous waste" or "dangerous waste." A waste tracking and inventory system will be implemented. Labels and markings will be positioned so that required information is visible. The label will meet the WAC 173-303-630(3) requirements, and the dangerous waste number will be clearly identified.

4E.11 The labels on the overpack for the spent melters will carry the accumulation or generation start date, the major risk(s) associated with the waste, and the words "hazardous waste" or "dangerous waste". A waste tracking and inventory system will be implemented. Labels and markings will be positioned so that required information is visible, and the dangerous waste number will be clearly identified.

4E.12 Miscellaneous Dangerous Waste Containers

4E.13 The miscellaneous dangerous waste drums will be labeled with the accumulation or generation start date, as appropriate, the major risk(s) associated with the waste, and the words "hazardous waste" or "dangerous waste". A waste tracking and inventory system will be implemented. Labels and markings will be positioned so that required information is visible. The label will meet the WAC 173-303-630(3) requirements, and the dangerous waste number will be clearly identified.

4E.14 Containment Requirements for Storing Waste

4E.15 Secondary containment requirements for the waste are discussed below.

4E.16 Secondary Containment System Design

4E.17 Secondary containment is required for areas in which containers hold free liquids. It is also required for areas managing wastes exhibiting the characteristics of ignitability or reactivity as defined in WAC 173-303-090(5) and (7).

4E.18 Miscellaneous Mixed Waste

4E.19 Miscellaneous mixed waste storage areas may contain waste requiring secondary containment. If wastes containing liquids or wastes exhibiting the characteristics of

~~ignitability or reactivity are generated, portable secondary containment that meets the requirements of WAC 173-303-630(7) will be provided.~~

~~4E.20 Miscellaneous Dangerous Waste~~

~~4E.21 Miscellaneous dangerous waste storage areas may contain waste requiring secondary containment. If wastes containing liquids or wastes exhibiting the characteristics of ignitability or reactivity are generated, portable secondary containment that meets the requirements of WAC 173-303-630(7) will be provided.~~

~~4E.22 System Design (Reserved)~~

~~4E.23 Miscellaneous Dangerous Waste~~

~~4E.24 Containers with liquids will be provided with portable secondary containment meeting the requirements of WAC 173-303-630(7).~~

~~4E.25 Structural Integrity of the Base~~

~~4E.26 The storage areas will be constructed to support storage and transportation of containers within the container storage areas and will be designed with the following:~~

~~4E.27 Containment system capable of collecting and holding spills and leaks.~~

~~4E.28 Base will be free of cracks and gaps and sufficiently impervious to contain leaks.~~

~~4E.29 Positive drainage control.~~

~~4E.30 Sufficient containment volume.~~

~~4E.31 Sloped to drain or remove liquid, as necessary.~~

~~4E.32 Containment System Capacity~~

~~4E.33 Miscellaneous Mixed Waste~~

~~4E.34 Each container holding liquid dangerous waste will be placed into portable secondary containment that meets the requirements of WAC 173-303-630(7). The waste~~

~~container will function as the primary containment while the portable containment device will function as the secondary containment.~~
~~4E.35 Each portable secondary containment will have the capacity to contain 10% of the volume of all containers within the containment area, or the volume of the largest container, whichever is greater.~~
~~4E.36 Miscellaneous Dangerous Waste~~
~~4E.37 Each container holding liquid nonradioactive dangerous waste will be placed into portable secondary containment. The waste container will function as the primary containment while the portable sump will function as the secondary containment.~~
~~4E.38 Each portable secondary containment will have the capacity to contain 10% of the volume of all containers within the containment area, or the volume of the largest container, whichever is greater. Typically, the waste containers will be steel drums.~~
~~4E.39 Control of Run-On~~
~~4E.40 Miscellaneous Mixed Waste~~
~~4E.41 Run-on will not reach the interior of the miscellaneous mixed waste storage areas, because they will be located within buildings, which will have roof gutters to remove precipitation.~~
~~4E.42 Miscellaneous Dangerous Waste~~
~~4E.43 Run-on will not reach the interior of the miscellaneous dangerous waste storage areas, because waste will be managed in buildings with walls and roof to remove precipitation.~~
~~4E.44 Removal of Liquids from Containment System~~
~~4E.45 Miscellaneous Mixed Waste~~
~~4E.46 Portable secondary containment sumps will be provided for individual containers that contain liquids. Hand pumps or similar devices will be used to remove liquid released to the portable secondary containments.~~
~~4E.47 Miscellaneous Dangerous Waste~~
~~4E.48 Portable secondary containment sumps will be provided for individual containers that contain liquids. Hand pumps or similar devices will be used to remove liquid released to the portable secondary containments.~~
~~4E.49 Demonstration that Containment is not Required because Containers do not Contain Free Liquids, Wastes that Exhibit Ignitability or Reactivity, or Wastes Designated F020-023, F026 or F027~~
~~4E.50 Miscellaneous Mixed Waste~~
~~4E.51 Secondary containment will be provided for individual containers that manage liquids. Wastes with the F020-F023, F026, and F027 numbers are not identified for the double shell tank (DST) system. Therefore, these waste numbers will not be present at the LAW vitrification facility.~~
~~4E.52 Miscellaneous Dangerous Waste~~
~~4E.53 Wastes with the F020-F023, F026, and F027 numbers are not identified for the DST system. Therefore, these waste numbers will not be present at the LAW vitrification facility.~~
~~4E.54 Prevention of Reaction of Ignitable, Reactive, and Incompatible Wastes in Containers~~
~~4E.55 Ignitable, Reactive, or Incompatible Miscellaneous Mixed Waste and Miscellaneous Dangerous Waste~~
~~4E.56~~4E.2 ~~Potentially incompatible wastes are not expected to be managed in the miscellaneous mixed waste storage areas. If such wastes are managed in one of these areas, the containers of incompatible waste or chemicals will not be stored in close~~

~~proximity to each other. Acids and bases will be stored on separate portable secondary containment sumps; oxidizers will be stored in areas separate from combustible materials; and corrosive chemicals will be stored on a separate secondary containment sump. These separate storage areas within the unit will be clearly marked with signs indicating the appropriate waste to be stored in each area. Potentially incompatible waste will be stored at least one aisle width apart.~~**Tank Systems**

~~4E.56.14~~4E.2.1 LAW Melter Feed Process

The LAW melter feed consists of the following systems:

- LAW concentrate receipt process system (LCP)
- LAW melter feed process system (LFP)
- Glass former reagent system (GFR) (the GFR system does not manage dangerous waste and is provided for ~~information~~informational purposes only)

Process flow diagram of the LAW Concentrate Receipt Process (LCP) System and the LAW Melter Feed Process (LFP) System are provided in DWP Operating Unit Group 10, Appendix 9.1. The LCP and LFP systems prepare feed for the LAW melters to produce a vitrified immobilized low-activity waste (ILAW) product. An analysis of the waste ~~determines a~~is conducted to determine the appropriate glass additive formulation for the conversion of the waste to glass. The glass additives specified in the formulation are weighed and mixed with the waste. There are two melter feed trains to supply the two LAW melters. Each melter feed train consists of a melter concentrate receipt vessel, a melter feed preparation vessel, and a melter feed vessel.

The LCP system includes the melter concentrate receipt vessels. The LFP system includes the melter feed preparation vessel and the melter feed vessel for each of the two melters~~.~~;.

The LCP tank system consists of the following tanks and their associated ancillary equipment:

- Melter Concentrate Receipt Vessels (LCP-VSL-00001/2)

The LFP tank system consists of the following tanks and their associated ancillary equipment:

- Melter Feed Preparation Vessels (LFP-VSL-00001/3)
- Melter Feed Vessels (LFP-VSL-00002/4)

Melter Concentrate Receipt Vessels (LCP-VSL-00001/2)

DWP Operating Unit Group 10, Appendix 9.1 contains a process flow diagram of the Melter Concentrate Receipt Vessels (LCP-VSL-00001/2). The ~~Melter Concentrate Receipt Vessels~~melter concentrate receipt vessels in LCP system receive ~~melter~~LAW feed concentrate from the ~~pretreatment~~Pretreatment facility~~. The Melter Feed Preparation Vessels are~~, LAWPS, and EMF. One of these vessels is located in each of the two functional process cells~~, and each~~. There is also one MFPV and one melter feed vessel in each of the two functional process ~~cell contains a Melter Concentrate Receipt Vessel, a Melter Feed Preparation Vessel, and a Melter Feed Vessel. The vessels are~~cells. These vessels are described below. Each concentrate receipt vessel is equipped with the following:

- Mechanical agitator
- ~~Pumps~~ Pump with installed spare to transfer ~~LAW~~ concentrate feed
- Instrumentation for liquid level, temperature, pressure, and density measurements

- Internal rotary spray ~~wash~~ nozzles for periodic washdown
- Overflow ~~nozzle~~ to C3/C5 ~~Drains/ Sump Collection Vessel (RLD-VSL-00004)~~drain/sump collection vessel

~~Spare nozzles~~• Vent to the LAW secondary offgas system (LVP) via the vessel vent header

- Plant service air purge to control flammable gas accumulation, with instrumentation and alarm to
- monitor for low purge airflows
- Backup air supply connection.

Valves are located in valve bulges LCP-BULGE-00001/2/3. ~~Valving in LCP-BULGE-00001~~Valve ~~alignment receives~~alignment receives LAW concentrate from the PTF in the baseline configuration, and from LAWPS, and EMF in the Direct Feed LAW (DFLAW) configuration, and directs it to the LAW Concentrate Receipt Vessels (LCP-VSL-00001/2). ~~Valving~~Valve alignment in bulges LCP-BULGE-00001/3 allows the LAW concentrate to be routed to the Melter Feed Preparation Vessels (LFP-VSL-00001/3), or to the Plant Wash Vessel (RLD-VSL-00003) if the Melter Concentrate Receipt Vessels (LCP-VSL-00001/2) are being cleaned out or if the contents of the vessels cannot be satisfactorily processed. In addition, LAW concentrate can be transferred between the two Melter Concentrate Receipt Vessels (LCP-VSL-00001/2), or directs it to the ASX system for sampling (ASX-SMPLR-00012/13).

Transfer of out-of-specification LAW concentrate from the LAWPs to LAW is prevented by batch sampling and prior acceptance by WTP before a batch transfer begins, in addition, feed transfers have radiation monitoring and interlock.

Glass Former Reagent (GFR) System

The GFR system contains the glass former feed mixers that receive blended glass formers and sucrose by dense-phase pneumatic conveyors from the glass former system.

The feed mixers are equipped with filters to remove the dust from air used for pneumatic conveying and blending. A series of single filter cartridges will be mounted on the top of the mixers. The filters are cleaned by introducing compressed air through the cleaning nozzle to blow accumulated dust back into the hoppers.

The feed mixers are equipped with load cells to weigh the glass formers to confirm that the material in the upstream blending silo is conveyed to the feed hoppers and to confirm that the glass formers are transferred out of the feed hoppers to the Melter Feed Preparation Vessels.

The glass formers are gravity-fed with a rotary feeder into the Melter Feed Preparation Vessels, where the glass formers are mixed with the waste feed. This equipment is located in an isolated area that serves as a contamination barrier between the melter feed preparation vessels and the glass former supply. The rotary valve controls the rate of glass former addition into the melter feed preparation vessels.

Melter Feed Preparation Vessels (LFP-VSL-00001/3)

DWP Operating Unit Group 10, Appendix 9.1 contains a process flow diagram of the Melter Feed Preparation Vessels (LFP-VSL-00001/3). The Melter Feed Preparation Vessels mix LAW concentrate from the Melter Concentrate Receipt Vessels (LCP-VSL-00001/2) with glass formers and sucrose from the glass former feed hoppers. ~~The vessels are equipped with~~The LFP Melter Feed Preparation Vessels (LFP-VSL-00001/3), their internal components, and the associated ancillary equipment include the following:

- ~~Mechanical~~One mechanical agitator (LFP-AGT-00001/3)
- ~~Pumps~~

- ~~Instrumentation for~~Two vertical pumps (LFP-PMP-00001A/B) or (LFP-PMP-00003A/B)
- Instruments, including liquid level measurement
- Internal spray wash nozzles
- Overflow ~~nozzle~~line to the common header to C3/ C5 Drains/ Sump Collection Vessel (RLD-VSL-00004)
- ~~Spare nozzles~~
- Vent line to the vessel vent collection header
- Sample lines to auto samplers (ASX-SMPLR-00012/13)
- Valve bulges LFP-BULGE-00001/2.

The ~~Vessel~~vessel pumps LFP-PMP-00001A/B and LFP-PMP-00003A/B transfer ~~wastes~~waste using valve bulges, LFP-BULGE-00001/2. Valves in the bulge allow melter feed to be routed to the associated Melter Feed Vessel (LFP-VSL-00002/4) or to the Plant Wash Vessel (RLD-VSL-00003) if the Melter Feed Preparation Vessels (LFP-VSL-00001/3) are being cleaned out. The vessel contents can be circulated through the pump and injected back into the vessel in the recirculation mode. In addition, melter feed can be pumped between the two Melter Feed Preparation Vessels (LFP-VSL-00001/3), or ~~directs it~~directed to the ASX system for sampling (ASX-SMPLR-00012/13).

Melter Feed Vessels (LFP-VSL-00002/4)

DWP Operating Unit Group 10, Appendix 9.1 contains a process flow diagram of the Melter Feed Vessels (LFP-VSL-00002/ 4). The Melter Feed Vessels receive blended melter feed, consisting of LAW concentrate and glass formers, from the Melter Feed Preparation Vessels (LFP-VSL-00001/ 3). ~~The vessels~~Each Melter Feed Vessel (LFP-VSL-00002/4) are equipped with the following:

- ~~Mechanical~~One mechanical agitator (LFP-AGT-00002/4(
- Six Air ~~displacement supply~~Displacement Slurry (ADS) pumps ~~to transfer feed to the corresponding LAW melter~~(LFP-PMP-00007 through 12) or (LFP-PMP-00013 through 18)
- ~~Feed vessel~~One vertical pump (LFP-PMP-00002/4)
- ~~Instrumentation for liquid level measurement~~
- ~~Miscellaneous solution addition line~~
- Internal spray wash nozzles
- Instruments, including liquid level measurement
- Overflow ~~nozzle~~lines to the common header to C3/ C5 Drains/ Sump Collection Vessel ~~(~~RLD-VSL-00004~~)~~
- ~~Spare nozzles~~
- Vent line to the vessel vent collection header
- Sample lines to auto samplers (ASX-SMPLR-00012/13)
- Valve bulges (LFP-BULGE-00001/2)

The feed vessel pumps (LFP-PMP-00002/4) transfer waste feed through the valve bulges LFP-BULGE-00001/2. ~~Valving~~Valve alignment in the bulges allows the waste feed to be pumped between all four vessels: the two Melter Feed Preparation Vessels (LFP-VSL-00001/3) and the two Melter Feed Vessels (LFP-VSL-00002/4). Waste feed can also be transferred from the Melter Feed Vessels to the Plant Wash Vessel (RLD-VSL-00003) for vessel cleanout, or directs it to the ASX system

for sampling (ASX-SMPLR-00012/13). Normally, ADS pumps transfer the melter feed from the melter feed vessel to the melter.

~~4E.56.2~~4E.2.2 LAW Melter Process (LMP) System ~~(LMP)~~

Figure 4A-21 located in Appendix 4A presents a simplified process flow diagram of the LAW Melter Process (LMP) System. DWP Operating Unit Group 10, Appendix 9.1 contains a process flow diagram of the LAW Melter Process (LMP) System ~~(LMP).~~. The purpose of the LMP system is to convert a blended slurry of liquid LAW feed and glass former additives into a durable ILAW product.

The locally shielded LAW melter system design is based on operating two joule-heated melters located in a C3 environment. Key functions of LMP include containment, joule heated melting, melter feed, and glass discharge.

Miscellaneous Treatment Unit Sub-Systems

Each LAW Melter (LMP-MLTR-00001/2) includes the following major components:

- Melter shell
- Refractory
- Electrodes
- Discharge systems
- Instruments, including level detection, density, temperature, and pressure measurements
- Offgas lines (LOP system)

The LAW Melters (Appendix 4A, Figure 4A-48) have a nameplate capacity of 15 metric tons of glass per melter per day.

The melter shell is comprised of the base, walls, lid, and gas barrier plates structurally supported by the enclosure. Each LAW Melter has a single internal glass chamber with a rectangular surface area. The melter shell inner surface will also minimize the release of melter gases and contaminants in the event of the melter pressurization. A small air purge will be provided for the annular space between the cooling panels and the shell to reduce the deposition of materials. This purge will be driven by melter vacuum.

The melters are equipped with ceramic refractory that ~~has~~have two unique sections. These sections are the refractory in contact with the molten glass pool (glass pool refractory), and the refractory surrounding the gas space above the glass pool (plenum refractory). Glass pool refractory is designed to withstand corrosion from molten glass. The glass pool refractory, used in conjunction with active cooling provided by a water jacket, will provide glass containment, thermal insulation, and electrical isolation. The plenum is lined with refractory designed to withstand hot corrosive gases, thermal shock, and glass and feed splatter. ~~Key functions of LMP include containment, joule heated melting, melter feed, and glass discharge.~~

~~Miscellaneous Treatment Unit Sub-Systems~~

- ~~LAW Melters (LMP-MLTR-00001/2)~~

~~The LAW Melters (Appendix 4A, Figure 4A-48) have a nameplate capacity of 15 metric tons of glass per melter per day. Each LAW Melter has a single internal glass chamber with a rectangular surface area.~~
The melter is powered by three pairs of electrodes that are ~~mounded~~mounted opposite each other along the long axis of each melter. The glass is discharged through either of two discharge chambers located within one of the long axis walls of the melter. The lid of the melter is composed of layers of refractory backed by a corrosion-resistant metal plate and support structure. The lid also supports the components

that are submerged in the melt pool and suspended in the melter plenum. The melter is encased in an integral shielding and secondary containment enclosure. The melter plenum is maintained at a controlled vacuum with offgas system fans and injection of air into the offgas line near the melter exhaust. This assures containment and avoids pressurization.

~~The refractory is part of the melter containment and can be described as two separate sections. These sections are the refractory in contact with the molten glass pool and the refractory surrounding the gas space above the glass pool, which is referred to as the plenum. The glass pool refractory, used in conjunction with active cooling provided by a water jacket, will provide glass containment, thermal insulation, and electrical isolation. The plenum refractory is primarily designed to resist thermal breakdown, resist corrosion by offgases, and resist corrosion by splashed feed and glass.~~

~~The melter shell is comprised of the base, walls, lid, and gas barrier plates structurally supported by the enclosure. The melter shell inner surface is designed to allow operation of the melter at a negative pressure. This inner surface will also minimize the release of melter gases and contaminants in the event of melter pressurization. A small air purge will be provided for the annular space between the cooling panels and the shell to reduce the deposition of materials. This purge will be driven by melter vacuum.~~

The LAW melter system has been designed to shield and contain the melter so that no additional shielding or contamination control will be required for normal operations. This has been accomplished by enclosing the melter assembly in a steel box. Shielding is provided by the entire enclosure. Access panels are provided through the external shielding. When removed, these panels will allow access to equipment such as jack-bolts, electrodes, electrode thermocouples, viewing cameras.

~~The heat for the LAW melter~~Electrodes/Joule Heating

The LAW Melters (LMP-MLTR-00001/2) are powered by three pairs of electrodes that are located opposite each other. The heat for the LAW Melters (LMP-MLTR-00001/2), startup is provided by temporarily installed radiant electric heaters mounted on the roof of the melter. ~~These heaters melt glass formers sufficiently to make it ionically conductive between the melter's joule heating electrodes.~~ When a conducting path is established, the melter is heated ~~in a controlled manner~~ by passing ~~more and more~~ current between the electrodes through the glass (a process known as joule heating). After some time, the ~~melter reaches its~~LAW Melters (LMP-MLTR-00001/2) reach the operating temperature and slurry feeding can start. ~~As water evaporates, the feed forms a "cold cap" on the surface of the melt. As more slurry is fed, molten~~The nominal glass melt pool temperature is approximately 1,150 °C. This is ~~formed by dissolution and melting of the cold cap materials~~measured with thermocouples in thermowells submerged into the ~~glass melt. When the melt level rises~~pool at various locations. The power to ~~a predetermined level, it~~the electrodes is ~~discharged into a container.~~regulated to maintain the temperature within a selected range.

~~The melter plenum is maintained at a controlled vacuum with offgas system fans and injection of air into the offgas line near the melter exhaust. This assures containment and avoids pressurization.~~

~~Joule Heating~~

~~The joule heating system contains the melter electrodes, melter electrode power supplies, melter glass pool thermocouples, and the melter electrode control system.~~

~~The electrode configuration for each LAW Melter will consist of three pairs of plate electrodes mounted parallel to each other on the long axis of the melter.~~ The electrodes will have forced- air cooled electrode extensions. The extensions will penetrate the side of the melter below the glass level to minimize the effects of thermal expansion and to minimize the potential for corrosion by sulfate.

Active cooling of the extensions and the use of a water- cooling jacket will prevent glass from migrating through the refractory package adjacent to the electrode extension penetrations. ~~Power to the electrodes will be single-phase alternating current applied across opposing electrodes. The nominal glass melt pool temperature is approximately 1,150°C. This is measured with thermocouples in thermowells submerged into the pool at various locations. The power to the electrodes is regulated to maintain the temperature within a selected range.~~

Melter Feed System

Feed will be introduced to the melter as a slurry through nozzles in the melter lid. Water and volatile constituents in the slurry will evaporate, leaving behind a layer of material known as the cold cap. Waste feed components in the cold cap will undergo chemical reactions, be converted to their respective oxides, and dissolve in the molten glass. The feed rate determines the cold cap coverage on the glass melt pool. The feed rate can be controlled based on the average plenum temperature measured by plenum thermocouples mounted in the melter lid. New slurry will be added at about the same rate as the cold cap dissolves, maintaining the quantity of cold cap material at a steady level. Air injectors will be used to mix and agitate the molten glass. When the melt level rises to a predetermined upper limit, an air lift mechanism is actuated and glass is discharged to a container.

~~Glass Discharge System~~A list of conditions that stop the waste feed to the LAW Melters (LMP-MLTR-00001/2) is provided below.

- Melter plenum high pressure
- LVP header high pressure
- Loss of offsite power
- High differential pressure across the offgas HEPA filters
- Melter glass pool ~~level measurement will be used to indicate when to start and stop glass discharge. It also provides alarms for high or low glass pool levels. Each LAW Melter has~~high level
- Low flow in caustic scrubber recirculation line
- High temperature in either melter lid cooling cavity
- High level in the associated melter feed vessel
- Low/high level in the associated SBS vessel
- High SBS condensate temperature
- Low differential temperature from the offgas/vessel vent and the filter train inlet
- High differential COx concentrations across the mercury mitigation skid.

Glass Discharge System

Each of the melters (LMP-MLTR-00001/2) have two identical ~~and~~ independently operated glass discharge systems ~~located adjacent to each other on one side of the melter. Each of these systems includes~~to include an airlift riser, a glass pour trough, a ~~heated~~ discharge chamber~~,~~ and other components and instruments needed to control the discharge of glass~~.~~ into the ILAW ~~container..~~container. The melter glass pool level measurement will be used to indicate when to start and stop glass discharge. It also provides alarms for high or low glass pool levels. When a container is required for filling, it is retrieved from the clean container staging area and lowered through the import hatch onto one of the two pour turntable bogies. The bogie travels to a position in front of one of the pour caves. The container is retrieved by one of the four monorail hoists and transported to one of the four pour cave turntables. The container is then rotated into the pour position. A through-wall position sensor confirms that the container is in position prior to lock pin engagement. A through-wall lock pin engages the turntable in its

pour position and prevents accidental rotation while the container elevator raises the container to the melter seal head and the container is filled with glass. The level of glass in the container is controlled by an infrared camera and the container load cell.

The glass discharge from the melter is initiated by injecting air or an inert gas at the bottom of the airlift riser. As the gas bubbles rise in the glass they will entrain glass in the riser, which is replaced by glass flowing in from the pool through the riser throat. The glass is lifted to the inlet of the trough, where the air bubbles disengage and the entrained glass flows into the trough. The glass then flows down the trough due to gravity and falls from the pour tip at the end of the trough into the container. The rate of glass discharge is controlled by adjusting the rate at which air is injected into the bottom of the riser.

Instrumentation, alarms, controls, and interlocks will be provided for the LMP to indicate or prevent the following conditions:

- Decrease or loss of melter plenum vacuum.
- Glass temperature that is too high or too low.
- Electrode extension temperature too high.
- Loss of melter cooling water.
- Plugged feed nozzle.
- Overfilling of glass container.

~~4E.56.3~~4E.2.3 Radioactive and Nonradioactive Liquid Waste Disposal (RLD and NLD) Systems

DWP Operating Unit Group 10, Appendix 9.1 contains a process flow diagram of the Radioactive and Nonradioactive Liquid Waste Disposal (RLD and NLD) System. ~~The RLD receives LAW vitrification process effluents for storage and transfer~~The functional purpose of the LAW RLD system is to receive mixed waste effluent for interim storage and to transfer the mixed waste effluent to the PTF or the EMF. In addition, mixing and sampling of the mixed waste effluent may be performed in this system as required.

~~The RLD tank system consists of three main vessels:~~

The LAW RLD system receives mixed waste effluent, overflow, drains, condensate, and tank washes from process and building support systems. The LAW RLD tanks collect, store, mix, provide samples to the auto sampling system (ASX), and transfer the mixed waste effluent to the PWD and TLP systems in the PTF or EMF. The LAW facility liquid waste that is non-dangerous/ non-radioactive is not normally routed to the RLD system. The LAW mixed waste effluent is collected in one of three permitted RLD tanks:

- Plant Wash Vessel (RLD-VSL-00003)
- LAW C3/ C5 Drains/ Sump Collection Vessel (RLD-VSL-00004)
- SBS Condensate Collection Vessel (RLD-VSL-00005)

The SBS Condensate Collection Vessel (RLD-VSL-00005) and the Plant Wash Vessel (RLD-VSL-00003) are located in the LAW effluent cell. The C3/C5 Drains/Sump Collection Vessel (RLD-VSL-00004) is located below grade to provide fire protection water collection and to collect effluents from the wet electrostatic precipitator, and C3/C5 gravity floor drains and sumps.

Sources of effluents into the RLD system are production and nonproduction-related activities. Production effluents are mixed waste liquids or slurries ~~routinely or periodically~~ generated by the waste treatment process. These effluents are routed ~~directly or indirectly~~ to the SBS Condensate Collection Vessel (RLD-VSL-00005). Liquid effluent from nonproduction activities, such as vessel, equipment and cell/cave washes, and sump discharges, are routed to one of the three vessels, depending on the nature of the effluent. Dangerous or mixed waste is routed to either the Plant Wash Vessel (RLD-VSL-00003) or the C3/C5 Drains/Sump Collection Vessel (RLD-VSL-00004). Liquid that is nondangerous/nonradioactive is routed to the C1/C2 Floor Drain/Sump Collection Tank in the NLD system.

~~The functional purpose of the RLD system is to receive effluents for interim storage and to transfer the effluent to the pretreatment facility. In addition, mixing and sampling of the effluent may be performed in this system as required.~~

Plant Wash Vessel (RLD-VSL-00003)

DWP Operating Unit Group 10, Appendix 9.1 contains a process flow diagram of the Plant Wash Vessel (RLD-VSL-00003).

This vessel is designed to receive the total volume of either the largest vessel in the LAW vitrification facility or the largest volume from the vessel/equipment wash or drain in the LAW vitrification facility. The largest volume is from the SBS Condensate Collection Vessel (RLD-VSL-00005). ~~Effluent sources for the~~The Plant Wash Vessel (RLD-VSL-00003) ~~are vessel~~is normally empty, but infrequently can receive plant washes from the following sources:

- Sumps (RLD-SUMP-00028 through 32), (RLD-SUMP-00035 and 36)
- Vessel washes or off-specification material from process vessels (LCP-VSL-00001/2) and (LFP-VSL-00001/2/3/4)
- Drains from the ~~overflow~~berm surrounding Caustic Collection Vessel (LVP-TK-00001)
- Suspect radioactive material from the C1/C2 Drains/Sump Collection Vessel (NLD-VSL-00005)
- Transfers from the C3/C5 Drains/Sump Collection Vessel (RLD-VSL-00004)
- Off-normal transfers from the SBS Condensate Collection Vessel (RLD-VSL-00005~~).)~~
- Overflows from the SBS Condensate Collection Vessel (RLD-VSL-00005)

Plant Wash Vessel (RLD-VSL-00003) has two vertical cantilever pumps (RLD-PMP-00001A/B) for transfer and sampling and one mechanical agitator (RLD-AGT-00001) for mixing of effluent. The Plant Wash Vessel (RLD-VSL-00003) is equipped with internal spray nozzles for flushing the tank interior, if needed.

The contents of the LAW Plant Wash Vessel (RLD-VSL-00003) are normally transferred to the Plant Wash Vessel PWD-VSL-00044 in the PTF or to the EMF. In addition, the contents can also be routed to the LAW SBS Condensate Receipt Vessel TLP-VSL-00009A/B in the PTF, SBS Condensate Collection Vessel (RLD-VSL-00005) or EMF. Content of the LAW Plant Wash Vessel (RLD-VSL-00003) is analyzed via auto sampler (ASX-SMPLR-00012) before transferred to the PTF or EMF.

The vessel is fitted with level instrumentation. The vessel is vented into a common vessel ventilation header that drains into the C3/C5 Drains/Sump Collection Vessel (RLD-VSL-00004). ~~During normal operation, the effluent characterized in the Plant Wash Vessel (RLD-VSL-00003) is expected to be transferred to the pretreatment facility~~.

LAW C3/C5 Drains/Sump Collection Vessel (RLD-VSL-00004)

DWP Operating Unit Group 10, Appendix 9.1 contains a process flow diagram of the LAW C3/C5 Drains/Sump Collection Vessel (RLD-VSL-00004).

The RLD C3/C5 Drains/Sump Collection Vessel (RLD-VSL-00004), its internal components, and the associated ancillary equipment include the following:

- Recirculation/transfer pumps (RLD-PMP-00002A/B) located in (RLD-BULGE-00001)
- Three mixing eductors (RLD-EDUC-00001A/B/C)
- Vessel overflow line to secondary containment (RLD-SUMP-00028)
- Vent line to a common header
- Sample line to and from auto sampler (ASX-SMPLR-00013)
- Instruments, including liquid level measurement
- Valve and Pump Bulge (RLD-BULGE-00001)

The C3/C5 Drains/Sump Collection Vessel (RLD-VSL-00004) normally receives liquid effluent from the following sources:

- Melter 1/2 WESP (LOP-WESP-00001/2) drains
- Overflows from other LAW process tanks through the overflow header
- Sump contents from the filter room and floor drains from C3/C5 areas
- Drains from the LVP vessel vent header
- Drains from auto sampler (ASX-SMPLR-00012/13)
- HVAC condensate drains

This vessel is designed to contain the maximum amount of fire protection water and the volume equivalent to the largest C3/C5 floor area wash. The C3/C5 Drains/Sump Collection Vessel (RLD-VSL-00004) routinely collects liquid drained from the Melter Wet Electrostatic Precipitators (LOP-WESP-00001/2). The overflow from the Melter Concentrate Receipt Vessels (LCP-VSL-00001/2) is also routed to the C3/C5 Drains/Sump Collection Vessel.

Routine process-related effluent from Wet Electrostatic Precipitator drains will be routed from this vessel to the SBS Condensate Collection Vessel. Effluent generated from other sources will drain to the Plant Wash Vessel (RLD-VSL-00003) until it reaches a predetermined level to maintain adequate capacity for fire protection water.

~~The C3/C5 Drains/Sump Collection Vessel (RLD-VSL-00004) is fitted with level instrumentation. The C3/C5 Drains/Sump Collection Vessel is vented into a common vessel ventilation header. Condensate that forms in the header drains into the C3/C5 Drains/Sump Collection Vessel. Sampling capability is provided using a sampling leg off the pump recirculation line to an autosampler unit.~~

The C3/C5 Drains/Sump Collection Vessel is located in an enclosed C3/C5 cell area. The C3/C5 Drains/Sump Collection Vessel overflows to a sump in the same cell. During normal operation, the effluent characterized in the C3/C5 Drains/Sump Collection Vessel is expected to be transferred to the TLP system via the SBS Condensate Collection Vessel (RLD-VSL-00005).

SBS Condensate Collection Vessel (RLD-VSL-00005)

DWP Operating Unit Group 10, Appendix 9.1 contains a process flow diagram of the SBS Condensate Collection Vessel (RLD-VSL-00005). ~~This~~.

SBS Condensate Collection Vessel (RLD-VSL-00005), its internal components, and the associated ancillary equipment include the following:

- Two transfer pumps per vessel ~~is designed~~(RLD-PMP-00003A/B)
- One mechanical agitator (RLD-AGT-00002)
- Vessel overflow line to ~~store SBS column purge effluent.~~ the Plant Wash Vessel (RLD-VSL-00003)
- Vent line to a common header
- Instruments, including liquid level measurement
- Valve and Pump Bulge (RLD-BULGE-00004)

The SBS Condensate Collection Vessel (RLD-VSL-00005) ~~routinely~~ receives effluent from the ~~Submerged Bed Scrubber (~~following sources:

- SBS Scrubbers (LOP-SCB-00001/2~~)) and the~~
- SBS Condensate Vessels (LOP-VSL-00001/2)
- C3/C5 Drains/Sump Collection Vessel (RLD-VSL-00004).

The SBS Condensate Collection Vessel is fitted with level instrumentation and is vented into a common vessel ventilation header that drains into the C3/C5 Drains/Sump Collection Vessel (RLD-VSL-00004). ~~Sampling capability is provided using a sampling leg off the pump recirculation line to an autosampler unit.~~ The SBS Condensate Collection Vessel ~~overflows to the Plant Wash Vessel~~ (RLD-VSL-~~00003). During normal operation, the effluent characterized in the~~00005) is equipped with two vertical cantilever pumps (RLD-PMP-00003A/B) for recirculation, transfer, and sampling, and one mechanical agitator (RLD-AGT-00002) for mixing. Sampling capability is provided to an auto sampler (ASX-SMPLR-00012). The SBS Condensate Collection Vessel ~~is expected to be transferred to the TLP system~~(RLD-VSL-00005) has two internal spray nozzles for flushing the tank interior, if needed.

The contents of the SBS Condensate Collection Vessel (RLD-VSL-00005) are normally transferred to the LAW SBS Condensate Receipt Vessels (TLP-VSL-00009A/B) in the PTF or to the EMF. Transfers can be routed to the PTF Plant Wash Vessel (PWD-VSL-00044), LAW Plant Wash Vessel (RLD-VSL-00003), or to the EMF. Content of the SBS Condensate Collection (Vessel RLD-VSL-00005) can be analyzed via auto sampler (ASX-SMPLR-00012).

The SBS Condensate Collection Vessel overflows to the Plant Wash Vessel (RLD-VSL-00003).

~~4E.56.4~~4E.2.4 LAW Radioactive Solid Waste Handling (RWH) System

. The ~~primary functions of this~~LAW RWH system ~~will be~~ does not include permitted tanks or MUs. The purpose of the RWH system is to provide equipment ~~for the~~ to facilitate change-out ~~of LAW~~ and packaging of secondary radioactive solid waste (RSW) in the LAW facility. The typical RSW in the LAW facility include the melter consumables, such as melter bubblers, spent HEPA filters, and failed process ~~vessels and other miscellaneous mixed wastes. This~~cells equipment. The LAW RWH system provides ~~the equipment to move waste out of the building~~crane coverage to support these activities.

The vessels are designed for 40 years of service. However, in the event of a failure, the process vessel will be prepared for export by rinsing, disconnection of the process lines, and decontamination. The vessel will be lifted out of the process cell and covered to prevent a spread of contamination. The vessel will be placed in an approved package staged for vessel receipt. Once closed and secured, the package, containing the vessel, will be delivered to an appropriate TSD facility. A similar process in reverse will be used for the introduction and installation of new LAW process vessels.

It is anticipated that LAW Melters will require periodic replacement. When the end of a melter's operational life is reached, as much residual molten glass as is practical will be removed as immobilized glass product. The LAW Melter will be allowed to cool and then will be disconnected. Openings in the melter shell will be seal welded, and the melter shell will be decontaminated if required, and transported to an appropriate TSD facility.

Disposal of miscellaneous mixed waste streams created during operation will be done by packaging at the point of generation. Localized collection points and disposal routes will be established at logical and optimal locations to accommodate maintenance and operations. Waste containers will be transferred to a staging area where packages will be weighed, labeled, and decontaminated for nonfixed contamination, if needed, prior to export. The packaged waste will then be stored at the WTP, and as needed transported to a Hanford site or off-site commercial treatment facility prior to final disposal at the Hanford site.

~~4E.56.5~~4E.2.5 ILAW Glass Container Handling

The ILAW glass container handling systems are support systems that do not include permitted tanks or MUs. The ILAW glass container handling systems provide equipment to import the ILAW containers, transfer within the LAW facility, and export for treatment and disposal. The ILAW glass container handling activities will consist of the following systems:

- LAW container receipt handling (LRH) system ~~(LRH)~~
- LAW container pour handling (LPH) system ~~(LPH)~~
- LAW container finishing handling (LFH) system ~~(LFH)~~
- LAW container export handling (LEH) system ~~(LEH)~~

The individual systems and their primary functions are described below:

LAW Container Receipt Handling (LRH) System

The primary function of the LRH system ~~takes delivery of new ILAW containers and provides a means~~is to provide mechanical handling equipment to transfer ~~these~~ empty containers from initial receipt in the LSH system truck bay to the pour tunnel. The LRH system accepts empty ILAW containers into the LAW facility and transports the containers to the LPH ~~transfer bogie (wheeled cart for container transfer).~~system where glass-filling operations are performed.

Container Receipt

After removal of the shipping over-wrap and initial receipt inspection, the containers are placed on a conveyor system and transferred into the facility as needed. New containers are then logged into the tracking system.

Container Import

Prior to the need for additional containers, a final inspection and transfer takes place in the container import bay. Each new container is moved to a container inspection stand. This allows an operator to assess the upper head/lifting flange area, including the "fill" opening, and to observe the inside of the container with a light.

The rest of the container is inspected as required, then the container is placed on the import line 1 or 2 staging conveyer, and the tracking log is updated. If the container inspection fails, it is logged and tagged appropriately and set aside.

Each time a container is placed on the conveyor, an operator initiates a conveyor transfer. The transfer serves to index containers on the staging conveyor forward so there is always a container in the "pickup" position on the airlock conveyor.

Container import instrumentation, alarms, controls, and/or interlocks will be provided as follows:

- The hatches are interlocked with the hoist and bogies so the hatch cannot be opened unless a process crane is positioned above the hatch. Conversely, the process cranes cannot leave hatch positions unless the hatch is closed and locked.
- The hatches are interlocked with the bogies so that the hatches cannot open unless a bogie is positioned below the hatch. The interlock prevents the bogie from leaving the hatch position unless the hatch is closed.

LAW Container Pour Handling (LPH) System

~~Each of the LAW melters has two glass discharges~~The LPH system receives empty containers from the LRH system, positions empty containers for filling, and transfers filled and cooled containers to the LFH system. Typical activities within the LPH system include container transfers from the container transfer bogies into the buffer storage area, container transfers within the buffer storage area, transfer from the buffer storage area to the transfer tunnel, and for container rework, if necessary. Each of the LAW melters has two glass discharge systems that operate independently. Each melter discharge chamber is aligned with a glass pour cave under the melter cell with associated features for filling a container with glass. Containers can be filled using one pour cave, using alternating caves, or both caves at the same time using alternating lifts. ~~The LPH system handles and positions product containers for filling with LAW glass product.~~ The major pieces of equipment include the container turntable, container elevator, transfer bogies, and monorail hoists.

Container Turntable, Container Elevator, Glass Pour Seal Head

A container turntable is provided in each pour cave for handling containers. The turntable accommodates three containers and rotates to position them at three stations: the container transfer station, the container fill station, and the container cooling station. At each container location in the turntable is a lower overpack section that locates the containers and provides support. Containers remain in the overpack during the elevating and glass filling cycle.

As containers are filled and cooled, the turntable rotates to the transfer station where container changeout occurs. Cooled, full product containers are removed from the turntable and replaced with empty containers. The turntable is rotated to position the empty container at the fill station. The container elevator raises the empty container and lower overpack up to the glass pour seal head for container filling.

The elevator is equipped with features to provide a weight of the product container being supported. Weight is used to verify that a container is present and that it is empty. The weight must be between established minimum and maximum values for glass pouring to occur. Additionally, the weight can be used to ensure that container filling is occurring and to provide the rate of glass pouring. The elevator weight is not intended to give an accurate weight of the container; it is merely used as an indication of container presence and condition.

The glass pour seal head is the interface between the melter discharge chamber and the product container during glass pouring. The seal head consists of a metal bellows arrangement that is connected to the melter discharge chamber with the other end of the bellows open for interface with product containers.

Container fill level is monitored by a thermal imaging camera. The camera provides a view of the diameter and the upper one-half of a container. The thermal imaging camera indicates container fill level

for primary control of fill rate and pour shut off. In the event of primary level detection failure, a gamma detector activates a high-high level shutdown.

The container is filled using several pours. The pour process occurs more quickly than glass can be made in the melter, resulting in lag time between pours. Rapid pouring allows molten glass to flow out to all edges of the container. Following the final glass pour batch, the container remains in position to provide initial container cooling and containment of final glass discharges. The container is then lowered to the turntable. The turntable is again rotated, placing the recently filled container at the cooling/venting station. Container cooling continues while another container undergoes the fill cycle. Once cooled, the container is rotated to the transfer position for export and the process is repeated.

Container Transportation

Another function of the LPH system is to provide product container transportation between the container transfer bogie and the pour cave turntable. The system transfers empty product containers from the container transfer bogie to the melter turntable, and transfers full product containers from the turntable to the transfer bogie in a manner that supports the facility throughput goals.

Concrete walls separate the pour caves from the bogie transfer tunnel. These walls have doorways large enough to allow the hoist units loaded with new or filled product containers to pass through them. The doorways are fitted with steel shield doors.

Concrete walls also separate the monorail maintenance facility from the bogie transfer tunnel. These walls have openings sized to prevent an ILAW container from entering the maintenance area. These doorways are also fitted with steel shield doors that provide radiological shielding from sources in the transfer tunnel during hands-on maintenance activities in the monorail maintenance facility.

Pour cave transfer operations are conducted remotely with only a few exceptions. Maintenance and recovery operations in the bogie transfer tunnel, such as a jammed grapple, may require hands-on intervention. Monorail hoist maintenance operations conducted in the maintenance facility are completely hands-on. Monorail hoist recovery operations can become a hands-on/remote combination depending on the failure details.

Buffer Storage Area

The LPH system provides a buffer storage area for ILAW containers in the event downstream processing lines become backed up. ~~Additionally, ILAW container rework is conducted in the~~ The buffer storage area~~.~~ includes the container rework area. Anticipated activities include ILAW container transfers into the buffer storage area from the container transfer bogies, container transfers within the buffer storage area, container ~~transfer~~transfers from the buffer storage area to the transfer tunnel, and container transfers to the container rework~~.~~ area, where ILAW container rework is conducted. The buffer storage area is adjacent to a crane maintenance facility. The crane maintenance area is shielded from the buffer storage area to allow hands-on maintenance in the crane maintenance facility and transfer tunnel while containers are present in the buffer storage area.

The LPH transfer tunnel runs from the bogie maintenance area on the west end of the facility to the buffer storage area at the east end of the building. The buffer storage area import/export positions are located within the container transfer corridor. Concrete walls with passages for ILAW containers separate the north and south buffer storage areas and the container transfer corridor. The passages are equipped with manually operated steel shield doors to support maintenance or bogie recovery operations that might be required in this portion of the transfer tunnel. The LFH hoists operating in the lidding area above this section of the container transfer corridor transfer ILAW containers to and from the buffer storage area import/export position.

Buffer storage area container transfer operations are conducted with the use of a bridge crane. The crane rails begin in the crane maintenance facility adjacent to the north end of the buffer storage area and extend south. The runway provides crane coverage to the crane maintenance area, the ILAW container buffer storage area, the container transfer corridor, and the two container import/export positions. There are container storage positions in the north and south portions of the ~~store~~buffer storage area, and one rework position also in the south portion of the ~~store~~buffer storage area. The rework position is located in the southeast corner of the ILAW container buffer storage area/rework area. The rework position can be fitted with a powered turntable, a pair of master-slave manipulators. A shielded window is located in this area. Directly east of the rework position, on the cold side of the buffer storage area, is a rework area operating platform that provides operator access to the master-slave manipulators and shielded window.

A winch is provided to support maintenance operations on the buffer storage area bridge crane. A steel shield door and a concrete wall separate the crane maintenance facility from the buffer storage area, allowing maintenance operations to be conducted while the buffer storage area contains full ILAW containers.

LAW Container Finishing Handling (LFH) System

Figure 4A-24 located in Appendix 4A presents a simplified process flow diagram of the LAW container finishing handling system (LFH). There are two LFH finishing lines. The functions of the LFH system are to verify the container fill level, determine if inert fill is required, complete closure of the ILAW container, decontaminate the exterior of the container, and verify surface contamination levels before exporting the container. The system also has the ability to sample the solidified glass, place the glass shards in a vial, and make these vials available for transfer to the laboratory.

The filled containers are raised from the transfer tunnel into one of two finishing lines and placed on a bogie. The bogie is used to shuttle the container between lidding area stations and the container decontamination station. The bogie with the container travels to the shard sampling station. A sample of the glass may be taken with the glass shard sampler. Based on the measured level in the container, inert fill is added as needed. From there the bogie travels to the container lidding station where the lid is mechanically secured to the container. After mechanically sealing the lid to the container, the bogie travels to the decontamination ~~area.~~

~~At the decontamination station, the container is decontaminated with carbon dioxide pellets. Debris produced during decontamination is collected with a HEPA filtered exhaust system. This gas stream is then routed to the plant vent system where it is passed through the facility's HEPA filters before being discharged through the stack.~~

~~Once the container is decontaminated, it is transported to the swabbing station where it is surveyed for loose surface contamination to verify it meets the contamination requirements. The swabbing machine uses a power manipulator to maneuver the swabs over the surface. The contaminated swabs are then monitored to determine gamma-beta levels for smearable contaminates. If contamination levels exceed C2 contamination criteria, the container can go through the carbon dioxide decontamination station. ILAW containers can be routed back through the decontamination stations until the radiological contamination levels are within specification.~~station. Once the container meets C2 contamination criteria, the bogie moves into the monitoring/export station.

~~The container is transported into the monitoring/export station from the swabbing station, and the gamma monitor measures the surface dose rate of the decontaminated container.~~ The container is then exported for shipment to the disposal site. If the container exceeds the dose rate, it is classified as an out-of-specification container. ~~Otherwise, the dose rate is measured and is recorded with the container's records. The container is then exported for shipment to the disposal site.~~

In the off-normal event that an out-of-specification ILAW container is generated, the container will be segregated and a corrective action plan generated. Container characterization data will be evaluated to ~~determine if it~~verify that the ILAW container can be disposed in accordance with approved Hanford Site Solid Waste Acceptance Criteria~~.~~ (HSSWAC).

Instrumentation, alarms, controls, and interlocks will be provided for the LFH system to indicate or prevent the following conditions:

- Opening of personnel access door when container is present in the line transfer station.
- Opening of personnel access door when either line transfer trap doors are open.
- Opening of both line transfer trap doors at the same time.
- Opening of personnel access door if airborne contamination levels are higher than design contamination classification within the line transfer station.

Decontamination Station

A decontamination station is located within each of the finishing lines in the LAW vitrification facility. After the ILAW container has been sealed, it is transported to the decontamination station. Equipment items located in the decontamination station include the carbon dioxide decontamination manipulator, turntable, and exhaust system. Most other items are located outside of the decontamination station, including the carbon dioxide pelletizer, the transport air compressor, and the liquid carbon dioxide storage and delivery system, exhaust fans, and HEPA filters.

The containers are decontaminated using carbon dioxide pellets. The carbon dioxide decontamination manipulator is fitted with an exhaust recovery hood to recover the effluent from the decontamination operation. Debris produced during decontamination is collected with a HEPA filtered exhaust system. This gas stream is then routed to the plant vent system where it is passed through the plant's HEPA filters before being discharged through the stack.

Once the container is decontaminated, it is transported from the decontamination station to the swabbing station.

Instrumentation, alarms, controls, and interlocks will be provided for the decontamination station to indicate or prevent the following conditions:

- Opening of the decontamination or decontamination/ swabbing containment door during decontamination.
- Opening of the decontamination and decontamination/ swabbing containment door at the same time.

Swabbing and Swabbing-Monitoring Station

At the swabbing station, containers are surveyed for loose surface contamination to verify that they meet the contamination requirement. The swabbing machine maneuvers the swabs over the container surface. After a prescribed area is covered, the contaminated swabs are exported away from radioactive source for monitoring to determine gamma-beta levels for smearable contaminates. If contamination levels exceed C2 criteria, the container is transported back into the decontamination station for rework. If the container meets C2 criteria, the turntable bogie moves into the export station.

Once the container is transported into the monitoring/export station from the swabbing station, a gamma monitor measures the dose rate of the decontaminated container.

If the container exceeds the specified dose requirement, it is classified as an out-of-specification container; otherwise, the dose rate is measured and is recorded within the container's records. The container is then exported out of the monitoring/export station for shipment to the disposal site.

Instrumentation, alarms, controls, and interlocks will be provided for the swab monitoring station to indicate or prevent the following conditions:

- Personnel access when a container is present in swab monitoring station.
- Opening of decontamination/ swabbing or swabbing/ export containment door during swabbing.
- Opening of personnel access door when container is present in the swabbing station.
- Opening of personnel access door if airborne contamination levels are higher than design contamination classification within the decontamination area.
- Opening of personnel access door if high concentration of carbon dioxide is present within the decontamination area.
- Rotation of ~~posting turntable~~ pour turntable during swabbing.
- Export of swab if radiation levels from swab are higher than design radiation classification in the operational area.

LAW Container Export Handling (LEH) System

The purpose of the LEH system is to load ILAW containers onto a transportation vehicle for transfer to a Hanford Site TSD unit. This system is contained in a truck bay on the east end of the LAW vitrification facility.

Under normal operations the ILAW container will be received from the LFH system through a hatch. Radiological dose rate and contamination level are determined and verified to be within limits prior to entering the LEH system. An overhead crane lifts the ILAW container through the hatch and places it on the transportation vehicle.

Operations are remote and maintenance is "hands-on" in the LEH system. The overhead crane is provided with closed circuit television cameras for operation when radiological conditions do not permit personnel access during the ILAW container loading.

~~4E.56.6~~4E.2.6 LAW Melter Equipment Support Handling (LSH) System

The primary function of the LSH system is to provide the equipment and support necessary to complete maintenance tasks on all melters and equipment in the melter gallery of the LAW vitrification facility. The primary equipment used in support of the maintenance efforts are:

- Consumable change-out boxes.
- Consumable change-out boxes storage racks.
- Consumable change-out boxes preparation stand.
- Melter gallery process cranes.
- Consumable change-out boxes handler.
- Lifting head.
- Melter gamma gate.

- Shield cover removal tool.

Melter consumables will be removed through the top of the melter shielding. Melter consumable items will be those that require routine and nonroutine maintenance, but provide necessary functions to continue melter operations. The routine consumable items will include bubbler assemblies. New bubbler assemblies will be shipped to the facility and will be installed into the melter.

Spent bubblers will be extracted from the melter, and transferred into a consumable change-out box (CCB) and then transferred into a box for treatment and disposal.

Refractory thermocouples, airlifts, level detectors, feed nozzles, and film coolers will be removed, bagged and loaded into the CCB and then transferred to a disposal box. These waste management tasks will be considered nonroutine and are replaced on an as-needed basis ~~according to~~. The waste is disposed of as secondary waste ~~management procedures and with appropriate LSH equipment.~~
according to secondary waste management procedures.

~~4E.56.7~~4E.2.7 LAW Melter Handling (LMH) System

The ~~Low Activity Waste (~~LAW~~) melter handling~~ LMH system ~~(LMH)~~ does not include permitted tanks or MUs. The LAW LMH system provides the mechanical handling equipment associated with the import of new Locally Shielded Melters (LSMs) and the export of failed or spent LSMs. The LMH system also provides specific facility structures to support LAW LSMs import and export operations, as well as miscellaneous mechanical handling equipment to support operations.

The function of System LMH include:

- Transfer new LAW melter from equipment pad to LAW Melter operating position (L-0112).
- Transfer equipment between C1/C2 airlock (L-0113) and monorail hoist maintenance rooms (L-B023A/ L-B023B).
- Transfer spent melters that are seal-welded and ready for transport from operating position (L-0112) to equipment pad.

The LAW Assembly/Staging Pad Area is located external to the LAW Facility at an elevation of +3’-0”. New melters are assembled in the assembly/staging pad area. The East side of the pad is configured as a loading dock to permit transfer of a spent LAW melter to the Tank Operating Contractor (TOC) supplied melter transport system. The pad incorporates LAW melter rails and provides multiple embed locations to mount a winch assembly.

The LAW Winch Assembly provides the motive force for transferring the new or spent LSM along fixed melter rails. The winch assembly operates in conjunction with pulley block assemblies to transfer an LSM. The winch assembly is only installed for LSM transfer operations and then is removed and stored.

When the LAW melter has reached the end of its operating life, it is disconnected from all systems and all penetrations on the enclosure are seal welded before it is be moved out of the LAW vitrification facility. Prior to deployment the LSM is surveyed and decontaminated as required and is loaded on the TOC melter transport system.

~~4E.57~~4E.3 Containment Buildings

This section describes how these units are designed and operated, in accordance with the requirements of WAC 173-303-695, which incorporates 40 CFR 264 Subpart DD, “Containment Buildings”, by reference. Regulatory citations in this section list the applicable section of the CFR to make it easier for readers to find the requirement. A typical containment building is illustrated in Appendix 4A, Figure 4A-59.

There are twenty-one containment buildings at the WTP: five located within the pretreatment facility; six in the LAW vitrification facility; and ten in the HLW vitrification facility. The regulated units in the LAW vitrification facility are:

- LAW LSM gallery containment building (L-0112)
- ~~LAW~~ILAW container finishing containment building (L-0109B, L-0109C, L-0109D, L-0109E, L-0115B, L-0115C, L-0115D, L-0115E, L-0116A)
- LAW vitrification facility consumable import/export containment building (L-0119B)
- LAW vitrification facility C3 workshop containment building (L-0226A)
- LAW pour cave containment building (L~~-B015A~~-B009B, L~~-B013C~~-B011B, L~~-B013B, L-~~-B011C, L~~-B011B, and L-B009B~~-B013B, L-B013C, L-B015A)
- ~~LAW~~ILAW container buffer storage containment building (L-B025C, L-B025D)

Table 4E-5 summarizes the units within the LAW vitrification facility. The following figures and drawings found in DWP Operating Unit Group 10 provide further detail for the containment buildings:

- Figure 4A-59 depicting common features of containment buildings.
- General arrangement figures and drawings showing locations of containment buildings.
- Waste management area figures showing containment building locations to be permitted.

Control of fugitive emissions from containment buildings is described in *Fugitive Emissions Control Description* (24590-WTP-PER-HV-02-001) located in Operating Unit Group 10 Appendix 7.15.

The following sections address each of the containment buildings.

~~4E.57.14~~4E.3.1 LAW LSM Gallery Containment Building (L-0112)

There will be six containment buildings in the LAW vitrification facility. The first is the LAW locally shielded melter (LSM) gallery containment building, which will house the two LAW Melters. The LAW Melters are designed to include a roller or wheel assembly that travels on rails that will be used to move the melters in and out of the containment building. Spent LAW Melters will be disconnected from the offgas system, feed lines, electrical lines, and instrumentation. Open ports will be seal welded. The sealed exterior of the melter will be decontaminated, if needed, prior to removal from the containment building.

LAW LSM Gallery Containment Building Design

The LAW LSM gallery containment building will be completely enclosed within the LAW vitrification facility. The unit will be designed to prevent the release and exposure of dangerous constituents to the outside environment. The design and construction of the LAW vitrification facility exterior will prevent water from running into the facility.

The roof of the LAW vitrification facility will consist of metal roofing, roof insulation, and a vapor barrier. Rainwater run-off will be collected by roof drains and a drainage system with overflow drains. The approximate dimensions of the unit are summarized in Table 4E-5.

The melter feed slurry will be introduced to the LAW melters through stainless steel feed lines and specialized reinforced flex hoses. The feed lines in between the melter feed vessel and the melter will pass through the Melter Feed Encasement Assembly (LMP-LDB-00001/00002) that functions as

secondary containment and provides leak detection. The encasement assembly and associate bellows are provided with a conductivity cable lead detection system. A drain within the assembly has also been incorporated into the design to allow drainage to a sump located in the adjacent process room.

The containment building design requirements of 40 CFR 264.1101(b) do not apply because any dangerous wastes with free liquids will be managed on portable secondary containment that meets the requirements of WAC 173-303-630(7). The only anticipated source of liquids in the LSM gallery are the waterlines to the two film cooler pipes, and the melter and melter lid cooling water piping systems. These clean water lines (isolated from contact with dangerous wastes) will be instrumented to detect leaks. The melter annulus and the gas barrier contain cooling liquids within the locally shielded melter and are both provided with leak detection. The melter lid cooling system is also a clean water system that is provided with temperature indication, level transmitters and flow and pressure indicators to identify a potential leak. A rupture of either water line or a waste feed line would be an abnormal event and the liquid would be contained within the locally shielded melter or in the encasement assembly and corrective measures would be initiated. Corrective action would start with closure of the supply line and draining of remaining water outside the melter, and could require feed cutoff and melter idling or shut down.

LAW LSM Gallery Containment Building Structure

The LAW LSM gallery containment building will be fully enclosed within the LAW vitrification facility. Therefore, structural requirements for the containment building will be met by the design standards of the LAW vitrification facility. The design will ensure that the unit has sufficient structural strength to prevent collapse or failure. Within the containment building will be partitions between the LSMs. DWP Operating Unit Group 10, Supplement 1 provides documentation that the seismic requirements for the LAW vitrification facility meet or exceed the Uniform Building Code Seismic Design Requirements.

LAW LSM Gallery Containment Building Materials

The LAW LSM gallery containment building will be constructed of steel-reinforced concrete. The interior floor and the walls of the unit will be covered with an epoxy coating to protect the concrete and facilitate decontamination.

Use of Incompatible Materials for the LAW LSM Gallery Containment Building

The epoxy coating will be applied to the concrete floor and a portion of the walls of the unit. The coating will be compatible with the wastes that will be managed in the containment building. The wastes to be managed in this containment building will include LAW LSM melters and consumables, which may be metallic parts and failed equipment. Reagents that could impact the epoxy ~~decontamination~~ coating will not be used within the unit.

Primary Barrier Integrity in the LAW LSM Gallery Containment Building

The LAW LSM gallery containment building will be designed to withstand loads from the movement of personnel, wastes, and handling equipment. The seismic design criteria found in DWP Operating Unit Group 10, Supplement 1 ensures that appropriate design loads, load combinations, and structural acceptance criteria are employed at the WTP.

Certification of Design for the LAW LSM Gallery Containment Building

Prior to initial receipt of dangerous and mixed waste, certification by a qualified registered professional engineer that the LAW LSM gallery containment building meets the design requirements of 40 CFR 264.1101(a), and (c) will be obtained. The requirements of 40 CFR 264.1101(b) do not apply to this design because any dangerous waste containing free liquids will be managed on portable secondary containment that meets the requirements of WAC 173-303-630(7).

Operation of the LAW LSM Gallery Containment Building

Operational and maintenance controls and practices will be established and followed to ensure containment of the waste within the LAW LSM gallery containment building, as required by 40 CFR 264.1101(c)(1). Activities in the building will be remotely conducted.

Maintenance of the LAW LSM Gallery Containment Building

The epoxy ~~decontamination~~ coating will be constructed and maintained in a manner that will be free of significant cracks, gaps, corrosion, or other deterioration. The concrete coating will be free of corrosion or other deterioration because it will be compatible with materials that will be managed in the containment building, including the glass waste and containerized or ~~uncontainerized~~un-containerized waste and equipment.

Measures to Prevent Tracking Wastes from the LAW LSM Gallery Containment Building

The unit is designed to manage LAW melters. ~~The melters will be~~When the LAW melter has reached the end of its operating life, it is disconnected from ~~systems when determined to be~~all waste~~. The ports where the melter was attached to systems will be sealed~~ feed and utility systems and all penetrations on the enclosure are seal welded so glass waste will be contained within the melter. This design will prevent waste from entering the containment building and thus from being tracked from the unit.

The unit will be classified as a C3 contamination area, which allows only limited personnel access. Access will be required only for non-routine events such as when melters are determined to be waste, approximately every 5 years, or when equipment must be dismantled. Dry decontamination methods will be used to decontaminate the melter and gallery areas.

Procedures in the Event of Release or Potential for Release from the LAW LSM Gallery Containment Building

Conditions that could lead to a release from the LAW LSM gallery containment building will be corrected on a schedule intended to preclude a release that could be hazardous to public health or the environment.

In the unlikely event of a release of dangerous wastes from the containment building, actions required by 40 CFR 264.1101(c)(3)(i) through (iii) will be taken. Specific administrative and operating methods that will be used to satisfy this requirement will be developed prior to initial receipt of dangerous and mixed waste. The methods will be followed to repair conditions that could lead to a release.

Inspections of the LAW LSM Gallery Containment Building

An inspection program will be established to detect conditions that could lead to release of wastes from the LAW LSM gallery containment building. The inspection and monitoring schedule and methods that will be used to detect releases from the unit are included in DWP Operating Unit Group 10, Chapter 6.0.

~~4E.57.2~~4E.3.2 ~~LAW~~ILAW Container Finishing Line Containment Building (L-0109B, L-0109C, L-0109D, L-0109E, L-0115B, L-0115C, L-0115D, L-0115E)

The ~~LAW~~ILAW container finishing line containment building will be located in the LAW vitrification facility. It will be used for managing ILAW containers that have cooled sufficiently to be closed and prepared for finishing. Typical waste management activities performed in this containment building include storage of open waste containers and container decontamination.

An ILAW container is transported from an inert filling and lidding room, to a decontamination room, and finally to a swab and monitor room, and then out of the containment building. This sequence of rooms is

considered a finishing line. There are two finishing lines within the ILAW container finishing line containment building.

~~LAW~~ILAW Container Finishing Containment Building Design

The ~~LAW~~ILAW container finishing containment building will be completely enclosed within the LAW vitrification facility. It will be designed to prevent the release and exposure of dangerous constituents to the outside environment. The design and construction of the LAW vitrification facility exterior will prevent water from running into the facility. The roof of the LAW vitrification facility will consist of metal roofing, roof insulation, and a vapor barrier. Roof drains and drainage system with overflow drains will collect run-off. The approximate dimensions of the unit are summarized in Table 4E-5.

~~LAW~~ILAW Container Finishing Containment Building Structure

Because the ~~LAW~~ILAW container finishing containment building will be a concrete-walled structure fully enclosed within the LAW vitrification facility, its structural requirements will be met by the design standards of the LAW vitrification facility. The design will ensure that the unit has sufficient structural strength to prevent collapse or failure. DWP Operating Unit Group 10, Supplement 1 provides documentation that the seismic requirements for the LAW vitrification facility meet or exceed the Uniform Building Code Seismic Design Requirements.

~~LAW~~ILAW Container Finishing Containment Building Materials

The ~~LAW~~ILAW container finishing containment building will be constructed of steel-reinforced concrete. The interior floor and a portion of the walls of the decontamination rooms will be coated with an epoxy coating to facilitate decontamination of the concrete.

Use of Incompatible Materials for the ~~LAW~~ILAW Container Finishing Containment Building

The primary concrete barrier will have an epoxy ~~decontamination~~ coating. This epoxy coating will be compatible with the waste managed in the unit. The waste to be managed includes vitrified waste glass within the stainless steel containers. This coating will be present in the two inert fill ~~rooms, the fixative application room, and~~rooms and the two swab and monitor rooms.

The epoxy coating will be provided to protect the concrete and facilitate decontamination. The coating will be compatible with the wastes that will be managed, which will include filled ILAW containers. Glass waste is not expected to be present on the exterior of the containers, due to the design of the melter pour stations. The interior is the only portion of the container that will be exposed to the glass waste. Additionally, the removal of glass will occur in the inert fill and lidding rooms. Carbon dioxide pellets, compatible with the stainless steel container, will be used to remove contamination from the container surface. Reagents that could cause the decontamination coating to leak, corrode, or otherwise fail will not be used within the unit.

Primary Barrier Integrity in the ~~LAW~~ILAW Container Finishing Containment Building

The ~~LAW~~ILAW containment building will be designed to withstand loads from the movement of personnel, wastes, and handling equipment. The seismic design criteria found in DWP Operating Unit Group 10, Supplement 1 ensures that appropriate design loads, load combinations, and structural acceptance criteria are employed at the WTP.

Certification of Design for the ~~LAW~~ILAW Container Finishing Containment Building

Prior to initial receipt of dangerous and mixed waste, certification by a qualified registered professional engineer that the ~~LAW~~ILAW containment building meets the design requirements of 40 CFR 264.1101(a) and (c) will be obtained.

The requirements of 40 CFR 264.1101(b) do not apply to this design because any dangerous waste containing free liquids will be managed on portable secondary containment that meets the requirements of WAC 173-303-630(7).

Operation of the ~~LAW~~ILAW Container Finishing Containment Building

Operational and maintenance controls and practices will be established to ensure containment of the waste within the ~~LAW~~ILAW containment building, as required by 40 CFR 264.1101(c)(1). Activities in the building will be remotely conducted.

Maintenance of the ~~LAW~~ILAW Container Finishing Containment Building

The epoxy decontamination coated concrete floor and walls of the of the containment building will be constructed and maintained in a manner that will be free of significant cracks, gaps, corrosion, or other deterioration. The coated concrete will be free of corrosion or other deterioration because it will be compatible with materials that will be managed in the containment building, which will include ILAW containers, containerized secondary waste, and failed equipment. Waste containers managed in the containment building will not be stacked.

Measures to Prevent Tracking Wastes from the ~~LAW~~ILAW Container Finishing Containment Building

The ~~LAW~~ILAW containment building is designed to sample, mechanically seal, and decontaminate the filled ILAW containers. Conducting these activities in a C3 zone prevents the spread of contaminated materials from the unit as air flow is managed in the LAW vitrification facility ventilation system. The containment building is under negative pressure. Air flow through this containment building goes to a C5 air system, which passes through HEPA filters before exiting the facility stack.

A vacuum cleanup system, located in the two inert fill rooms, is expected to be infrequently used to collect dust from the inert filling activities, and thereby minimize the potential for dust to be tracked from the unit. The dust will be disposed of as secondary waste.

Additionally, personnel access to the containment building, which is classified as a C3 contamination area, will be allowed only under limited circumstances, reducing the potential for contacting the waste and tracking it from the unit.

Procedures in the Event of Release or Potential for Release from the ~~LAW~~ILAW Container Finishing Containment Building

Conditions that could lead to a release from the ~~LAW~~ILAW containment building will be corrected on a schedule intended to preclude a release that could be hazardous to public health or the environment. In the unlikely event of a release of dangerous wastes from the containment building, actions required by 40 CFR 264.1101(c)(3)(i) through (iii) will be taken. Specific administrative and operating methods to satisfy this requirement will be developed prior to initial receipt of dangerous and mixed waste. The methods will be followed to repair conditions that could lead to a release.

Inspections of the ~~LAW~~ILAW Container Finishing Containment Building

An inspection program will be established to detect conditions that could lead to a release of wastes from the ~~LAW~~ILAW container finishing containment building. The inspection and monitoring schedule and methods that will be used to detect releases from the unit are included in DWP Operating Unit Group 10, Chapter 6.0.

~~4E.57.34~~4E.3.3 LAW Consumable Import/Export Containment Building (L-0119B)

The LAW vitrification facility consumable import/export containment building will be located in the west end of the LAW vitrification facility on the 3 ft elevation. Typical waste management activities performed in this containment building include decontamination, size reduction, and packaging of spent equipment.

~~Simple dry~~Dry wipe down decontamination of components will be performed to allow contact handling. Waste streams generated within the consumable import/export containment building will be transferred into a consumable change-out box (CCB) equipped with an internal bagging capabilities, and then packaged into a box for disposal. Waste typically generated in the consumable import/export area are managed in large waste boxes.

LAW Vitrification Facility Consumable Import/Export Containment Building Design

The LAW vitrification facility consumable import/export containment building will be designed as a completely enclosed area within the LAW vitrification facility. It is designed to prevent the release of dangerous constituents and their exposure to the outside environment. The design and construction of the LAW vitrification facility exterior will prevent water from running into the facility. The roof of the LAW vitrification facility will consist of metal roofing, roof insulation, and vapor barrier. Rainwater run-off will be collected by roof drains and drainage systems with overflow roof drains. The approximate dimensions of the unit are summarized in Table 4E-5.

LAW Vitrification Facility Consumable Import/Export Containment Building Structure

The LAW vitrification facility consumable import/export containment building will be a concrete-walled structure fully enclosed within the LAW vitrification facility. Therefore, structural requirements for the containment building will be met by the design standards of the LAW vitrification facility. The design will ensure that the unit has sufficient structural strength to prevent collapse or failure. DWP Operating Unit Group 10, Supplement 1 provides documentation that the seismic requirements for the LAW vitrification facility meet or exceed the Uniform Building Code Seismic Design Requirements.

LAW Vitrification Facility Consumable Import/Export Containment Building Materials

The LAW vitrification facility consumable import/export containment building will be constructed of steel-reinforced concrete. The interior floor and a portion of the walls of the unit will be coated with an epoxy coating to protect the concrete and facilitate decontamination.

Use of Incompatible Materials in the LAW Vitrification Facility Consumable Import/Export Containment Building

An epoxy ~~decontamination~~ coating will be provided for the floor of this unit. The coating will be compatible with the wastes that will be managed. Activities in the unit will be limited to decontamination and packaging the waste components into drums or waste boxes. Treatment reagents that could cause the coating to leak, corrode, or otherwise fail will not be used within the unit.

Primary Barrier Integrity in the LAW Vitrification Facility Consumable Import/Export Containment Building

The LAW vitrification facility consumable import/export containment building will be designed to withstand loads from the movement of personnel, wastes, and handling equipment. The seismic design criteria found in DWP Operating Unit Group 10, Supplement 1 ensures that appropriate design loads, load combinations, and structural acceptance criteria are employed at the WTP.

Certification of Design for the LAW Vitrification Facility Consumable Import/Export Containment Building

Prior to receipt of dangerous and mixed waste, a certification by a qualified registered professional engineer that the LAW vitrification facility consumable import/export containment building meets the design requirements of 40 CFR 264.1101(a) and (c) will be obtained. The requirements of 40 CFR 264.1101(b) do not apply to this design because any dangerous waste containing free liquids will be managed on portable secondary containment that meets the requirements of WAC 173-303-630(7).

Operation of the LAW Vitrification Facility Consumable Import/Export Containment Building

Operational and maintenance controls and practices will be established and followed to ensure containment of the wastes within the LAW vitrification facility C3 containment building unit as required by 40 CFR 264.1101(c)(1).

Maintenance of the LAW Vitrification Facility Consumable Import/Export Containment Building

The epoxy ~~decontamination~~ coating of the unit will be constructed and maintained in a manner that will be free of significant cracks, gaps, corrosion, or other deterioration. The coating will remain free of corrosion or other deterioration because it is compatible with materials that will be managed in the containment building. The failed equipment that will be managed and packaged in the containment building unit will be compatible with the protective coating. Only decontamination chemicals that are compatible with the coating will be used.

Measures to Prevent Tracking Wastes from the LAW Vitrification Facility Consumable Import/ Export Containment Building

The LAW vitrification facility consumable import/export containment building will be designed to package failed equipment to prevent the spread of contaminated materials. Very little dust is expected to be generated in the unit.

The containment building will be classified as a C3 contamination area, which allows only limited access by personnel. Wastes leaving the unit will be enclosed within containers. If necessary, these containers will be decontaminated in the unit prior to release and transportation to a permitted treatment and disposal area.

Procedures in the Event of Release or Potential for Release from the LAW Vitrification Consumable Import/Export Containment Building

The design and operation of the unit makes it very unlikely that releases will occur. The design and operational measures will minimize the generation of dust and contain it within the unit. The ventilation system will also use negative air pressure to keep contamination from spreading to areas of lesser contamination.

Inspections will identify conditions that could lead to a release. Such conditions will be corrected on a schedule intended to preclude a release that could be hazardous to public health or the environment. In the unlikely event that a release of dangerous wastes from the containment building is detected, actions required by 40 CFR 264.1101(c)(3)(i) through (iii) will be taken. Specific administrative and operating methods that will be used to satisfy this requirement will be developed prior to initial receipt of dangerous and mixed waste. These methods will be followed to repair conditions that could lead to a release.

Inspections of the LAW Vitrification Facility Consumable Import/Export Containment Building

An inspection program will be established to detect conditions that could lead to a release of wastes from the LAW vitrification facility consumable import/export containment building. The inspection and monitoring schedule and methods that will be used to detect releases from the unit are included in DWP Operating Unit Group 10, Chapter 6.0.

~~4E.57.44~~4E.3.4 LAW C3 Workshop Containment Building (L-0226A)

The C3 workshop containment building will be located in the west side of the LAW vitrification facility at elevation 28 ft.

Typical waste management activities performed in this containment building include decontamination, size reduction, and packaging of spent equipment. Equipment will be transported to the unit contained in shielded containers, drums, or in waste boxes. In the workshop, the equipment will be decontaminated to enable hands-on maintenance.

Spent equipment and parts will be bagged and placed in standard waste containers or boxes for disposal. Size reduction may be performed to facilitate packaging. Other spent equipment will be packaged in drums or waste boxes.

C3 Workshop Containment Building Design

The C3 workshop containment building will be a completely enclosed area within the LAW vitrification facility. It will be designed to prevent the release of dangerous waste and their exposure to the outside environment. The design and construction of the LAW vitrification facility exterior will prevent water from running into the facility. The roof of the LAW vitrification facility will consist of metal roofing, roof insulation, and vapor barrier. Rainwater run-off will be collected by roof drains and drainage systems with overflow roof drains. The approximate dimensions of the unit are summarized in Table 4E-5.

C3 Workshop Containment Building Structure

The C3 workshop containment building will be fully enclosed within the LAW vitrification facility. Therefore, structural requirements for the containment building will be met by the design standards of the LAW vitrification facility. The design will ensure that the unit has sufficient structural strength to prevent collapse or failure. DWP Operating Unit Group 10, Supplement 1 provides documentation that the seismic requirements for the LAW vitrification facility meet or exceed the Uniform Building Code Seismic Design Requirements.

C3 Workshop Containment Building Materials

The C3 workshop containment building will be constructed of a steel-reinforced epoxy coated concrete floor and plasterboard partition walls. The floor will be coated with an epoxy coating to protect the concrete and facilitate decontamination.

Use of Incompatible Materials in the C3 Workshop Containment Building

Activities in the unit will be limited to decontamination, size reduction, and packaging the waste components into drums or waste boxes. Treatment reagents that could cause the epoxy coating to leak, corrode, or otherwise fail will not be used within the unit.

Primary Barrier Integrity in the C3 Workshop Containment Building

The C3 workshop containment building is designed to withstand loads from the movement of personnel, wastes, and handling equipment. The seismic design criteria found in DWP Operating Unit Group 10, Supplement 1 ensures that appropriate design loads, load combinations, and structural acceptance criteria are employed at the WTP.

Certification of Design for the C3 Workshop Containment Building

Prior to initial receipt of dangerous and mixed waste, a certification by a qualified registered professional engineer that the C3 workshop containment building meets the design requirements of 40 CFR 264.1101(a) and (c) will be obtained. The requirements of 40 CFR 264.1101(b) do not apply to

this design because any dangerous waste containing free liquids will be managed on portable secondary containment that meets the requirements of WAC 173-303-630(7).

Operation of the C3 Workshop Containment Building

Operational and maintenance controls and practices will be established and followed to ensure containment of the wastes within the C3 workshop containment building unit as required by 40 CFR 264.1101(c)(1).

Maintenance of the C3 Workshop Containment Building

The epoxy coated concrete will be constructed and maintained in a manner that will be free of significant cracks, gaps, corrosion, or other deterioration.

The concrete will remain free of corrosion or other deterioration because it is compatible with materials that will be managed in the containment building. The failed equipment that will be managed in the containment building unit will be compatible with the coated concrete. Only decontamination chemicals that are compatible with the concrete coating will be used.

Measures to Prevent Tracking Wastes from the C3 Workshop Containment Building

The C3 workshop containment building will be designed to isolate failed equipment from the accessible environment and to prevent the spread of contaminated materials. Very little dust is expected to be generated in the unit.

The containment building is classified as a C3 contamination area, which allows only limited access by personnel. Personnel access will be via a C2/C3 sub-change room. Equipment will enter and exit the workshop via a C2/C3 airlock. Repaired equipment leaving the unit will be decontaminated, when necessary, before being released for removal from the containment building. Wastes leaving the unit will be packaged in waste containers or waste boxes. If necessary, the containers will be decontaminated in the unit prior to transportation to a permitted treatment or disposal area.

Procedures in the Event of Release or Potential for Release from the C3 Workshop Containment Building

The design and operation of the unit makes it very unlikely that releases will occur. The design and operational measures will minimize the generation of dust and contain it within the unit. The ventilation system will also use negative air pressure to keep contamination from areas of lesser contamination. Offgas will be routed to the LAW offgas treatment system.

Inspections will identify conditions that could lead to a release. Such conditions will be corrected on a schedule intended to preclude a release that could be hazardous to public health or the environment. In the unlikely event that a release of dangerous wastes from the containment building is detected, actions required by 40 CFR 264.1101(c)(3)(i) through (iii) will be taken. Specific administrative and operating methods that will be used to satisfy this requirement will be developed prior to initial receipt of dangerous and mixed waste. These methods will be followed to repair conditions that could lead to a release.

Inspections of the C3 Workshop Containment Building

An inspection program will be established to detect conditions that could lead to a release of wastes from the C3 workshop containment building. The inspection and monitoring schedule and methods that will be used to detect releases from the unit are included in DWP Operating Unit Group 10, Chapter 6.0.

~~4E.57.5~~4E.3.5 LAW Pour Cave Containment Building (L-B009B, L-B011B, L-B011C, L-B013B, L-B013C, L-B015A)

The LAW pour cave containment building (rooms L-B009B, L-B011B, L-B011C, L-B013B, L-B013C, L-B015A) will be located in the LAW vitrification facility, elevation -21 ft. It will be used for managing ILAW containers as they are filled with glass from the LAW Melters (LAW-MLTR-00001/2). The filled ILAW containers will be allowed to cool with the lids off the container. Cooled ILAW containers will be transferred to the ~~LAW~~ILAW container finishing line containment building for lidding and preparation for export to a storage facility.

LAW Pour Cave Containment Building Design

The LAW pour cave containment building will be completely enclosed within the LAW vitrification facility, which will be designed to prevent the release and exposure of dangerous constituents to the outside environment. The design and construction of the LAW vitrification facility exterior will prevent precipitation from entering into the facility. The roof of the LAW vitrification facility will consist of metal roofing, roof insulation, and a vapor barrier. Roof drains and drainage system with overflow drains will collect run-off. The approximate dimensions of the unit are summarized in Table 4E-5.

LAW Pour Cave Containment Building Structure

Because the LAW pour cave containment building will be a concrete-walled structure fully enclosed within the LAW vitrification facility, its structural requirements will be met by the design standards of the LAW vitrification facility. The design will ensure that the unit has sufficient structural strength to prevent collapse or failure. DWP Operating Unit Group 10, Supplement 1 provides documentation that the seismic requirements for the LAW vitrification facility meet or exceed the Uniform Building Code Seismic Design Requirements.

LAW Pour Cave Containment Building Materials

The LAW pour cave containment building will be constructed of steel-reinforced concrete that is provided with an insulated stainless steel liner to protect the concrete from thermal damage and support decontamination.

Use of Incompatible Materials for the LAW Pour Cave Containment Building

The waste to be managed includes vitrified waste glass within the stainless steel containers and insulated stainless cladding. No glass waste is expected to be present on the exterior of the containers, due to the design of the melter pour stations. The interior is the only portion of the container that will be exposed to the glass waste. Reagents that could cause corrosion or other failure will not be used within the unit.

Primary Barrier Integrity in the LAW Pour Cave Containment Building

The LAW pour cave containment building will be designed to withstand loads from the movement of personnel, wastes, and handling equipment. The seismic design criteria found in *RPP-WTP Compliance with Uniform Building Code Seismic Design Requirements*, DWP Operating Unit Group 10, Supplement 1 ensures that appropriate design loads, load combinations, and structural acceptance criteria are employed at the WTP.

Certification of Design for the LAW Pour Cave Containment Building

Prior to initial receipt of dangerous and mixed waste, certification by a qualified registered professional engineer that the LAW pour cave containment building meets the design requirements of 40 CFR 264.1101(a) and (c) will be obtained. The requirements of 40 CFR 264.1101(b) do not apply to

this design because any dangerous waste with free liquids will be managed on portable secondary containment that meets the requirements of WAC 173-303-630(7).

Operation of the LAW Pour Cave Containment Building

Operational and maintenance controls and practices will be established to ensure containment of the waste within the LAW pour cave containment building, as required by 40 CFR 264.1101(c)(1). Activities in the building will be remotely conducted during normal operation when ILAW containers are present.

Maintenance of the LAW Pour Cave Containment Building

The insulated stainless steel clad concrete will be free of corrosion or other deterioration because it will be compatible with materials that will be managed in the containment building, which will include containerized glass waste and equipment.

Measures to Prevent Tracking Wastes from the LAW Pour Cave Containment Building

The LAW pour cave containment building is designed to manage the filling and movement of ILAW containers. Conducting these activities in a C5 zone prevents the spread of contaminated materials from the unit as airflow is managed in the LAW vitrification facility ventilation system. The containment building is under negative pressure. Airflow through this containment building goes to a C5 air system, which passes through HEPA filters before exiting the facility stack. Personnel access will be restricted during normal operation since it is classified as a C5 contamination area. The containment building may be reclassified as a C3 area for equipment maintenance.

Procedures in the Event of Release or Potential for Release from the LAW Pour Cave Containment Building

Conditions that could lead to a release from the LAW pour cave containment building will be corrected on a schedule intended to preclude a release that could be hazardous to public health or the environment. In the unlikely event of a release of dangerous wastes from the containment building, actions required by 40 CFR 264.1101(c)(3)(i) through (iii) will be taken. Specific administrative and operating methods to satisfy this requirement will be developed prior to initial receipt of dangerous and mixed waste. The methods will be developed to repair conditions that could lead to a release.

Inspections of the LAW Pour Cave Containment Building

An inspection program will be established to detect conditions that could lead to a release of wastes from the LAW pour cave containment building. The inspection and monitoring schedule and methods that will be used to detect releases from the unit are included in DWP Operating Unit Group 10, Chapter 6.0.

~~4E.57.6~~4E.3.6 LAW Container Buffer Storage Containment Building (L-B025C, L-B025D)

The LAW container buffer storage containment building (rooms L-B025C, L-B025D) will be located in the LAW vitrification facility, elevation -21 ft. It will be used for managing ILAW containers ~~as~~ after they are filled with glass from the LAW Melters (LAW-MLTR-00001/2). The filled ILAW containers will be allowed to cool with the lids off the container. Cooled ILAW containers will be transferred to the ~~LAW~~ILAW container finishing line containment building for lidding and preparation for export to a storage or disposal facility.

LAW Container Buffer Storage Containment Building Design

The LAW container buffer storage containment building will be completely enclosed within the LAW vitrification facility, which will be designed to prevent the release and exposure of dangerous constituents to the outside environment. The design and construction of the LAW vitrification facility exterior will prevent precipitation from entering into the facility. The roof of the LAW vitrification facility will

consist of metal roofing, roof insulation, and a vapor barrier. Roof drains and drainage system with overflow drains will collect run-off. The approximate dimensions of the unit are summarized in Table 4E-5.

LAW Container Buffer Storage Containment Building Structure

Because the LAW container buffer storage containment building will be a concrete-walled structure fully enclosed within the LAW vitrification facility, its structural requirements will be met by the design standards of the LAW vitrification facility. The design will ensure that the unit has sufficient structural strength to prevent collapse or failure. DWP Operating Unit Group 10, Supplement 1 provides documentation that the seismic requirements for the LAW vitrification facility meet or exceed the Uniform Building Code Seismic Design Requirements.

LAW Container Buffer Storage Containment Building Materials

The LAW container buffer storage containment building will be constructed of steel-reinforced concrete provided with an epoxy coating to protect the concrete and facilitate decontamination.

Use of Incompatible Materials for the LAW Container Buffer Storage Containment Building

The waste to be managed includes vitrified waste glass within the stainless steel containers. No glass waste is expected to be present on the exterior of the containers. The interior is the only portion of the container that will be exposed to the glass waste. Reagents that could cause corrosion or other failure of the epoxy coating will not be used within the unit.

Primary Barrier Integrity in the LAW Container Buffer Storage Containment Building

The LAW container buffer storage containment building will be designed to withstand loads from the movement of personnel, wastes, and handling equipment. The seismic design criteria found in *RPP-WTP Compliance with Uniform Building Code Seismic Design Requirements*, DWP Operating Unit Group 10, Supplement 1 ensures that appropriate design loads, load combinations, and structural acceptance criteria are employed at the WTP.

Certification of Design for the LAW Container Buffer Storage Containment Building

Prior to initial receipt of dangerous and mixed waste, certification by a qualified registered professional engineer that the LAW container buffer storage containment building meets the design requirements of 40 CFR 264.1101(a) and (c) will be obtained. The requirements of 40 CFR 264.1101(b) do not apply to this design because any dangerous waste containing free liquids will be managed on portable secondary containment that meets the requirements of WAC 173-303-630(7).

Operation of the LAW Container Buffer Storage Containment Building

Operational and maintenance controls and practices will be established to ensure containment of the waste within the LAW container buffer storage containment building, as required by 40 CFR 264.1101(c)(1). Activities in the building will be remotely conducted during normal operation when ILAW containers are present.

Maintenance of the LAW Container Buffer Storage Containment Building

The epoxy coated concrete will be free of corrosion or other deterioration because it will be compatible with materials that will be managed in the containment building, which will include containerized glass waste and equipment. Wastes containers managed in the containment building will not be stacked.

Measures to Prevent Tracking Wastes from the LAW Container Buffer Storage Containment Building

The LAW container buffer storage containment building is designed to manage the movement and storage of ILAW containers. Conducting these activities in a C5 zone prevents the spread of contaminated materials from the unit as airflow is managed in the LAW vitrification facility ventilation system. The containment building is under negative pressure. Airflow through this containment building goes to a C5 air system, which passes through HEPA filters before exiting the facility stack. Personnel access will be restricted during normal operation since it is classified as a C5 contamination area. The containment building may be reclassified as a C3 area for equipment maintenance.

Procedures in the Event of Release or Potential for Release from the LAW Container Buffer Storage Containment Building

Conditions that could lead to a release from the LAW container buffer storage containment building will be corrected on a schedule intended to preclude a release that could be hazardous to public health or the environment. In the unlikely event of a release of dangerous wastes from the containment building, actions required by 40 CFR 264.1101(c)(3)(i) through (iii) will be taken. Specific administrative and operating methods to satisfy this requirement will be developed prior to initial receipt of dangerous and mixed waste. The methods will be developed to repair conditions that could lead to a release.

Inspections of the LAW Container Buffer Storage Containment Building

An inspection program will be established to detect conditions that could lead to a release of wastes from the LAW container buffer storage containment building. The inspection and monitoring schedule and methods that will be used to detect releases from the unit are included in DWP Operating Unit Group 10, Chapter 6.0.

~~4E.58~~4E.4 Air Emission Control

~~4E.58.1~~4E.4.1 LAW Vitrification Facility Ventilation

The LAW vitrification facility will be divided into four numbered zones (the C4 designation is not used) listed and defined below, with the higher number indicating greater radiological hazard potential and therefore a requirement for a greater degree of control or restriction. The zoning of the ventilation system will be based on the classifications assigned to building areas for potential radiological contamination. Zones classified as C5 are potentially the most contaminated and include the pour caves, buffer storage area, and process cells. Zones classified as C1 are uncontaminated areas.

Containment will be achieved by maintaining C5 areas at the greatest negative pressure, with airflows cascaded through engineered routes from C2 areas to C3 areas and on to the C5 areas. The cascade system, in which air passes through more than one area, will reduce the number of separate ventilation streams and hence the amount of air requiring treatment. Adherence to this concept in the design and operation of the LAW vitrification facility will ensure that the ventilation air does not become a significant source of exposure to operators, and that the air emissions do not endanger human health or the environment.

An exhaust air radiation monitoring system, consisting of sensors to monitor radiation in the exhaust air stream, or a representative sampling system is provided in the discharge header downstream of the exhaust fans. A monitoring system would consist of probe assemblies, vacuum pumps, a stack flow sensor, temperature sensor, and radiation sensors. A temperature transmitter is also provided in the discharge header downstream of the exhaust fans for continuous monitoring of exhaust air temperature.

C1 Ventilation (C1V) System

C1 areas are normally occupied~~. C1 areas will typically consist of administrative offices, control rooms, conference rooms, locker rooms, rest rooms,~~ and ~~equipment rooms.~~are expected to remain free of

contamination. C1 areas will be operated slightly pressurized relative to atmosphere and other adjacent areas.

The C1V system consists of AHUs, change rooms exhaust fan, ductwork, and accessories. Areas served by this system include:

- Office spaces
- Control Room
- Incident Command Post (ICP) [During DFLAW operations]
- Lunch Room
- Restrooms
- Change Rooms
- Truck Bays
- LAW Switchgear Building

C2 Ventilation (C2V) System

C2 areas will typically consist of non-process operating areas, equipment rooms, stores, access corridors, and plant rooms adjacent to areas with higher contamination potential. The C2V is served by dedicated air handling units and exhaust fans. Ventilation air supplied to C2 areas will be exhausted by the C2 exhaust system and cascaded into adjacent C3 areas. The sum of the volumetric flow rates exhausted by the C2 exhaust system and cascaded into adjacent C3 areas will be greater than the volumetric flow rate supplied to C2 areas. This will cause the C2 areas to maintain a nominal negative pressure relative to atmosphere. C2 exhaust will pass through one stage of HEPA filters and be discharged to the atmosphere by the exhaust fans. Supply and exhaust fans are provided with variable frequency drives.

C3 Ventilation (C3V) System

C3 areas are normally unoccupied, but allow operator access, for instance during maintenance. C3 areas will typically consist of filter plant rooms, workshops, maintenance areas, and monitoring areas. Air will generally be drawn from C2 areas and, wherever possible, cascaded through the C3 areas into C5 areas, or alternatively exhausted from the C3 areas by the C3 exhaust system. In general, air cascaded into the C3 areas will be from adjacent C2/C3 subchange rooms. C3 exhaust will pass through one stage of HEPA filters and be discharged to the atmosphere by the exhaust fans. C3 exhaust fans are provided with variable frequency drives.

C5 Ventilation (C5V) System

Where there is in-bleed air from the C3 system to the C5 system, fan cascade trip interlocks protect the system from backflow.

The C5 areas in the LAW vitrification facility will be composed of the following:

- Pour caves
- Container transfer tunnel
- Buffer storage area
- C3/ C5 drains/ sump collection vessel room
- Process cells
- Finishing line

Air will be cascaded into the C5 areas and exhausted by the C5 exhaust system. Engineered ventilation pipe entries (air in-bleeds) through the C5 confinement boundary will be protected by backflow isolation dampers. C5 exhaust will pass through two stages of HEPA filters and be discharged to the atmosphere by the exhaust fans. C5 exhaust fans are provided with variable frequency drives.

~~4E.58.2~~4E.4.2 LAW Melter Offgas System

The LAW Melter Offgas System consists of the following process systems:

- LAW Primary Offgas Process (LOP) System
- LAW Secondary Offgas/Vessel Vent Process (LVP) System

Process flow ~~diagram~~diagrams of the ~~LAW Primary Offgas Process (~~LOP~~)~~ System are provided in DWP Operating Unit Group 10, Appendix 9.1. The LOP tank system consists of the following tanks and miscellaneous treatment unit sub-systems and their associated ancillary equipment:

Tank System

- LAW Melter SBS Condensate Vessels (LOP-VSL-00001/2)
- Pumps
- Eductor (LOP-EDUC-00001)

Miscellaneous Treatment Unit Sub-Systems

- Melter 1 and Melter 2 Primary and Standby Film Coolers (LOP-FCLR-00001/2/3/4), one set for each melter
- Melter 1 and Melter 2 Submerged Bed Scrubbers (SBS)(LOP-SCB-00001/2)
- Melter 1 and Melter 2 Wet Electrostatic Precipitators (WESP) (LOP-WESP-00001/2)

Process flow diagram of the ~~LAW Secondary Offgas/Vessel Vent Process (~~LVP~~)~~ System are provided in DWP Operating Unit Group 10, Appendix 9.1. The LVP tank system consists of the following tanks and miscellaneous treatment unit sub-systems and their associated ancillary equipment.

Tank System

- LAW Caustic Collection Tank (LVP-TK-00001)

Miscellaneous Treatment Unit Sub-Systems

- Melter Offgas HEPA Preheaters(LVP-HTR-00001A/1B)
- Melter Offgas HEPA Filters (LVP-HEPA-00001A/1B/2A/2B/3A)
- Offgas Mercury Adsorbers (LVP-ADBR-00001A/1B)
- ~~Catalytic Oxidizer Electric Heater (LVP-HTR-000002)~~
- Thermal Catalytic Oxidizer Skid (LVP-SKID-00002)
- Selective Catalytic Oxidizer (SCO) (LVP-SCO-00001)
- NOx Selective Catalytic Reduction Unit (SCR) (LVP-SCR-00001)

- Catalytic Oxidizer Heat Recovery Unit (LVP-HX-00001)
- ~~Melter Offgas Exhausters (LVP-EXHR-00001A/B/C)~~
- ~~Melter Offgas Caustic Scrubber (LVP-SCB-00001)~~
- Catalytic Oxidizer Electric Heater (LVP-HTR-000002)

Melter offgas is generated from the vitrification of LAW feed in the two joule-heated ceramic melters and the vessel ventilation system. The rate of generation of gases in the melter is dynamic. The melters generate offgas resulting from decomposition, oxidation, and vaporization of feed material. Constituents of the offgas include:

- Nitrogen oxides from decomposition of metal nitrates in the melter feed.
- Chloride, fluoride, and sulfur as oxides, acid gases, and salts.
- Particulates and aerosols.
- Entrained feed material and glass.
- Mercury.

In addition, the LAW Melters generate small quantities of other volatile compounds including iodine-129, carbon-14, tritium, and volatile organic compounds. Carbon-14 and tritium are in the form of carbon dioxide and water, respectively.

The purpose of the LAW Melter offgas system is to cool and treat the melter offgas and vessel ventilation offgas to a level that is protective of human health and the environment. The offgas system ~~must~~ also ~~provide~~provides a pressure confinement boundary that will control melter pressure and prevent vapor release to the cell. The design of the melter offgas system ~~must accommodate~~accommodates changes in offgas flow from individual melters without causing either melter to pressurize and without allowing variations in the flow from one melter to impact the other melter.

Separate systems are provided for the initial treatment of offgas from each melter. This is considered the primary offgas treatment system. This primary offgas system is designed to handle intermittent surges of seven times the normal steam generation rate and three times the normal non-condensable gas generation rate from the melter feed without causing interruption of melter operations. The primary system consists of Film Coolers (LOP-FCLR-00001/3), Submerged Bed Scrubbers (LOP-SCB-00001/2), and a Melter Wet Electrostatic Precipitator (LOP-WESP-00001/2). This system cools the offgas and removes particulates.

There is a second offgas line from the Melter to the Submerged Bed Scrubbers (LOP-SCB-00001/2) consisting of a Standby Film Cooler (LOP-FCLR-00002/4) and a butterfly valve as the isolation device. The melter is operated under negative pressure. In the event that the primary offgas line plugs or the melter surges beyond design basis, the butterfly valve opens allowing offgas flow to the submerged bed scrubber through the second offgas line, thereby preventing melter pressurization. The line is also designed to handle surges up to seven times the normal steam generation rate and three times the non-condensable gas generation rate from melter feed without causing interruption in melter operations. In the event that the melter surge exceeds the pressure relief set point, the pressure relief device opens venting the offgas to the process cell. The pressure relief device closes as the melter pressure approaches the desired set point. Offgas from the wet process cell is drawn through C5V HEPA Filters to remove particulates before discharged to the atmosphere.

The vessel ventilation system offgas consists primarily of air, water vapor, and minor amounts of aerosols generated by the agitation or movement of vessel contents. The vessel ventilation system header joins the primary offgas system after the Wet Electrostatic Precipitators (LOP-WESP-00001/2), and the combined offgas is routed to the secondary offgas treatment system.

The secondary offgas system (from HEPA preheater to final discharge) is designed to handle maximum sustained flowrate from the two melters assuming both melters are operating. The system is also capable of operating effectively if only one melter is running. The secondary offgas system consists of Melter Offgas Preheater (LVP-HTR-00001A/1B) with Melter Offgas HEPA Filter trains (LVP-HEPA-00001A/2A/3A and 00001B/2B), and the Melter Offgas Exhausters (LVP-EXHR-00001A/B/C). The balance of the secondary offgas system includes the Offgas Mercury Adsorbers (LVP-ADBR-00001A/B), LVP-SKID-00002 made up of a Thermal Catalytic Oxidizer (LVP-SCO-00001)/Selective CatalyticReducer (LVP-SCR-00001), the Catalytic Oxidizer Heat Recovery Unit (plate and frame heat exchanger) (LVP-HX-00001), Catalytic Oxidizer Electric Heater (LVP-HTR-00002), the catalyst for volatile organic compound oxidation and the catalyst for nitrogen oxides reduction; and a Melter Offgas Caustic Scrubber (LVP-SCB-00001).

The melter offgas exhausters will be located downstream of the LVP Caustic Scrubber (LVP-SCB-00001) and maintain negative pressure across the LVP primary and secondary offgas equipment upstream of the exhausters. The following sections provide descriptions of major melter offgas treatment components.

~~4E.58.2.1~~4E.4.2.1 LAW Primary Offgas Process (LOP) System

Process flow diagram of the LAW Primary Offgas Process (LOP) System are provided in DWP Operating Unit Group 10, Appendix 9.1. The purpose of the LOP tank system and miscellaneous treatment unit sub-systems is to cool the offgas and remove aerosols generated by each of the two LAW melters. The primary components consist of a film cooler, submerged bed scrubber, and a wet electrostatic precipitator.

Melter Film Coolers (LOP-FCLR-00001/2/3/4)

The primary function of the Film Cooler miscellaneous treatment unit sub-system is to cool the offgas and entrained molten glass droplets below the glass sticking temperature to minimize glass deposition on the offgas piping walls. The offgas exits the melter and is mixed with steam or steam/air mixture in the offgas Film Cooler. The Film Cooler is a double-walled pipe designed to introduce air/steam axially along the walls of the offgas pipe through a series of holes or slots in the inner wall. Each melter has a primary and a standby Film Cooler.

Melter Submerged Bed Scrubber (LOP-SCB-00001/2)

Each LAW Melter has a dedicated Submerged Bed Scrubber miscellaneous treatment unit sub-system. After each primary Film Cooler (LOP-FCLR-00001/3), the offgas enters the Submerged Bed Scrubber column for further cooling and solids removal. The Submerged Bed Scrubber is a passive device designed for aqueous scrubbing of entrained particulates from melter offgas, cooling and condensation of melter vapor emissions, and interim storage of condensed fluids. It will also quench the offgas to a desired discharge temperature through the use of cooling coils/jacket. The offgas leaves the Submerged Bed Scrubber in approximate thermal equilibrium with the scrubbing solution.

The Submerged Bed Scrubbers (LOP-SCB-00001/2) have two offgas inlets, one for the normal operations line and one for the standby line. Standby Film Coolers (LOP-FCLR-00002/4) can be routed to either Submerged Bed Scrubber. Each Standby Film cooler is normally routed to its respective submerged bed scrubber; however, each film cooler can be routed to the alternate submerged bed scrubber. The offgas enters the Submerged Bed Scrubber through the appropriate inlet pipe that runs down through the center of the bed to the packing support plate. The bed-retaining walls extend below the support plate creating a

lower skirt to allow the formation of a gas bubble underneath the packing. The entire bed is suspended off the floor of the Submerged Bed Scrubber to allow the scrubbing solution to circulate freely through the bed. After formation of the gas ~~bubble~~bubbles beneath the packing, the injected offgas ~~then~~ bubbles up through the packed bed. The rising gas bubbles also cause the scrubbing liquid to circulate up through the packed bed, resulting in a general recirculation of the scrubbing solution. The packing breaks larger bubbles into smaller ones to increase the gas to water contacting surface, thereby increasing particulate removal and heat transfer efficiencies. The warmed scrubbing solution then flows downward outside of the packed bed past the cooling coils/jacket.

To maintain a constant liquid level within the Submerged Bed Scrubbers (LOP-SCB-00001/2), ~~it will be equipped with~~ overflow lines will be installed that ~~allows~~allow for the continuous discharge of offgas condensate and some scrubbed particulates to the Melter SBS Condensate Vessels (LOP-VSL-00001/2~~)~~), located next to the Submerged Bed Scrubber. The Melter SBS Condensate Vessels are equipped with a cooling jacket. The rate of condensate discharge is determined by how much the offgas temperature is lowered below its dew point. The condensate and some collected particulates overflow into the Melter SBS Condensate Vessels.

To minimize the buildup of the solids in the bottom of the Submerged Bed Scrubber, condensate from the Melter SBS Condensate Vessels (LOP-VSL-00001/2) will be re-circulated back to the Submerged Bed Scrubber and injected through multiple lances to agitate and suspend solids on the submerged bed scrubber floor. The collected solids will then be pumped directly off the Submerged Bed Scrubber vessel floor to the Melter SBS Condensate Collection Vessel (RLD-VSL-00005). This purging and recycling process occurs simultaneously. Submerged Bed Scrubber condensate from the SBS Condensate Collection Vessels (LOP-VSL-00001/2) ultimately flows to the TLP system. Venting of the Melter SBS Condensate Vessels is via the Submerged Bed Scrubber into the main offgas discharge pipe.

The scrubbed offgas discharges through the top of the Submerged Bed Scrubbers (LOP-SCB-00001/2) and is routed to the Melter Wet Electrostatic Precipitators (one per melter) (LOP-WESP-00001/2) for further particulate removal.

In addition to the instrumentation, alarms, controls, and interlocks addressed in Appendix 4E, the following will be provided for the Submerged Bed Scrubber to indicate or prevent the following conditions:

- High scrubber liquid temperature.
- Low and High scrubber liquid level.
- High condensate vessel liquid level.
- Loss of chilled water supply.
- Differential pressure across the unit.

Melter Wet Electrostatic Precipitators (LOP-WESP-00001/2)

The Submerged Bed Scrubber (LOP-SCB-00001/2) discharge is routed to the Melter Wet Electrostatic Precipitator miscellaneous treatment unit sub-system for removal of aerosols down to and including submicron size. Each melter system has a dedicated Melter Wet Electrostatic Precipitator (LOP-WESP-00001/2). The offgas enters the unit and passes through a distribution plate. The evenly distributed saturated gas then flows up through tubes which act as positive electrodes. Each of the tubes has a single negatively charged electrode, which runs down the center of the tube. A high voltage, direct current transformer supplies power to the electrodes. A strong electric field is generated along the electrodes giving a negative charge to the aerosols passing through the tubes. The negatively charged

particles move towards the positively charged tube walls for collection. Collected particles are continuously washed from the tube walls along with collected mists. The final condensate continuously drains to the dished bottom area of the Melter Wet Electrostatic Precipitators' (LOP-WESP-00001/2~~) dished bottom area.~~). A water spray may be used periodically to facilitate the washing of collected aerosols from the tubes. The tube drain and wash solution are routed to the C3/C5 Drains/Sump Collection Vessel (RLD-VSL-00004).

In addition to the instrumentation, alarms, controls, and interlocks addressed in Appendix 4E, ~~the following~~a standby offgas line and a maintenance bypass line will be provided for the Melter Wet Electrostatic Precipitators~~ to~~. The lines indicate or prevent the following conditions:

- Loss of electrical power to the unit.
- High differential pressure across the unit.
- Accumulation of liquid.
- Loss of process water supply.

Standby Offgas Line

The standby offgas line consists of an offgas pipe from the melter to a Submerged Bed Scrubber (LOP-SCB-00001/2), a Standby Film Cooler (LOP-FCLR-00002/4), and a butterfly valve ~~as the~~ isolation device.

During an off-normal melter surge or if the primary offgas pipe becomes plugged, ~~this~~the butterfly valve will open rapidly, ~~providing~~and provide an alternative path for the melter offgas to flow to the Submerged Bed Scrubbers (LOP-SCB-00001/2). With this alternative routing, pressure control on the melter plenum can be maintained. This standby offgas pipe will extend to the bottom of the Submerged Bed Scrubber packed bed, identical to the main offgas line. It is the same size as the main offgas line, thus providing a doubling of flow cross-section for melter-generated gases.

Maintenance Bypass Line

The LAW Melters are also equipped with a maintenance bypass line, allowing offgases from one melter to be routed to the other's Submerged Bed Scrubber for cooling. The gas will be processed through both a primary and secondary offgas treatment system in the same manner as the normal path. The purpose of this line is to provide melter ventilation during idling conditions in the unlikely event that a Submerged Bed Scrubber (LOP-SCB-00001/2) or Melter Wet Electrostatic Precipitator (LOP-WESP-00001/2) requires maintenance. Prior to initiating use of the maintenance bypass line, waste feed ~~would~~will be secured, and the melters placed into an idle condition. ~~No waste~~Waste feed ~~would be fed~~ to ~~the~~ melters will not occur when the maintenance bypass line is in use.

Idling emissions from the melter are mainly heated air at a lower gas volume than expected during slurry feeding. The gas will be processed through secondary offgas treatment system that includes HEPA filtration, thermal catalytic oxidation, and selective catalytic reduction.

~~4E.58.2.2~~4E.4.2.2 LAW Secondary Offgas/Vessel Vent Process (LVP) System

Process flow diagram of the LAW Secondary Offgas/Vessel Vent Process (LVP) System are provided in DWP Operating Unit Group 10, Appendix 9.1. The ~~offgas~~LVP system prevents migration of waste contaminants into the process cells and ~~potentially~~ operating areas. It does this by maintaining the various LAW process vessels under a slight vacuum relative to the cell. The composition of the vessel ventilation air is expected to be primarily ambient air with slight mixed waste particulate contamination.

The vessel ventilation air is combined with the melter offgas prior to entering the secondary offgas system HEPA filter electric preheaters. The combined air streams are treated together in the remaining sections of the secondary offgas treatment systems. A pressure control valve is used to regulate the pressure between the vessel ventilation offgas system and the melter offgas system.

The melter offgas stream that is treated through the primary offgas system is combined with the vessel ventilation offgas stream and treated through the LVP tanks and miscellaneous treatment sub-systems. The secondary offgas system removes the remaining particulate, mercury and miscellaneous acid gases, gaseous nitrogen oxide compounds, carbon monoxide, and volatile organic compounds.

Descriptions of the tanks and miscellaneous treatment sub-systems comprising the LVP are provided below:

Melter Offgas HEPA Filters, HEPA Preheaters, and Exhausters

The purpose of ~~these~~the miscellaneous treatment unit sub-systems is to provide a final protection against dispersion of particulate and to protect the downstream equipment from particulate contamination. The combined offgas stream is first passed through the LAW Melter Offgas HEPA Preheaters (LVP-HTR-00001A/1B). Preheating increases the gas temperature sufficiently above its dew point to avoid condensation in the melter offgas HEPA filters. The offgas then passes through radial flow HEPA Filters (LVP-HEPA-00001A/2A/3A or 00001B/2B). The system is composed of two parallel trains of two filter banks in series.

The offgas passes through one train while the other remains available as an installed backup. Motive force for the ventilation is provided by the Melter Offgas Exhausters (LVP-EXHR-00001A/B/C). The melter offgas exhausters will be located downstream of the LVP Caustic Scrubber (LVP-SCB-00001) and maintain negative pressure across the LVP primary and secondary offgas equipment upstream of the exhausters.

Instrumentation, alarms, controls, and interlocks will be provided for the LVP system to indicate or prevent the following conditions:

- High or low differential pressure across a HEPA filter alarms.
- Loss of electric heater element.

Additional information to the instrumentation, alarms, controls, and interlocks associated with a bypass of the LVP system addressed in Appendix 4E are described in the *LAW Vitrification Offgas Bypass Analysis*, 24590-LAW-PER-PR-03-001.

Offgas Mercury Adsorber (LVP-ADBR-0001A/B)

The Offgas Mercury Adsorbers (LVP-ADBR-00001A/B) make up LVP-SKID-00001 and are the miscellaneous treatment sub-system that removes volatile mercury, iodine, and some acid gases from the offgas. The offgas flows through two internal activated carbon beds normally operated in series. When breakthrough gaseous mercury is detected ~~breaking through~~in the leading activated carbon bed, ~~indicating that~~ the carbon is loaded. In response, the offgas flow is manually changed to make the trailing bed the leading bed. Only one activated carbon bed is used when the spent activated carbon media is removed~~,~~ and replaced. ~~The~~ After replacement, the flow is ~~then~~ changed to make the fresh activated carbon bed the trailing bed.

The activated carbon is batch loaded into the adsorber by gravity. The spent activated carbon media is batch transferred by gravity into waste containers. The spent activated carbon media is managed as secondary waste.

Instrumentation, alarms, controls, and interlocks will be provided for the Offgas Mercury Adsorbers (LVP-ADBR-00001A/B) to indicate or prevent the following conditions:

- Mercury breakthrough in the leading carbon bed, signaling to switch ~~to~~a ~~the~~the trailing carbon bed.
- With the detection of high carbon monoxide/carbon dioxide concentrations, the inlet and outlet valves are closed, isolating the carbon media and bypassing the carbon beds from the offgas stream. This limits the available oxygen to a carbon bed fire and is the primary fire suppression control.
- A water suppression system is available in the event of a carbon bed fire. Alarms notify an operator allowing the connection of the water fire suppression system and manual activation of the suppression system if needed.

Thermal Catalytic Oxidizer (TCO) (LVP-SCO-00001) and NOx Selective Catalytic Reduction Unit (SCR) ~~Unit~~ (LVP-SCR-00001)

The offgas passes through the catalytic oxidizer/reducer skid (LVP-SKID-00002~~)~~), housing a heat recovery unit (LVP-HX-00001), an electric heater (LVP-HTR-00002), VOC catalyst (LVP-SCO-00001), and SCR catalyst (LVP-SCR-00001) miscellaneous treatment unit sub-systems to remove volatile organic compounds, carbon monoxide, nitrogen oxide compounds in the offgas stream.

The heat recovery exchange first raises the offgas temperature using the hot offgas from the catalyst beds. The electric heater is used to supplement the heat recovery exchange primarily during start-up and when operating with low NO_x concentrations. The heated offgas is passed through the VOC catalyst to oxidize VOCs and carbon monoxide to carbon dioxide and water vapor. The offgas is then injected with a mixture of ammonia vapor and C3 air from an ammonia/air dilution skid. Following ammonia injection, the offgas is passed through the SCR catalyst to reduce NO_x to nitrogen and water vapor.

The reduction reaction is exothermic, significantly increasing the offgas temperature. The outgoing hot offgas is cooled down in the heat exchanger and concurrently serves as the heating media for the incoming offgas. The cooled offgas stream is then directed to the Caustic Scrubber for acid gas removal and final cooling.

Instrumentation, alarms, controls, and interlocks will be provided for the Thermal Catalytic Oxidizer / Selective Catalytic Reducers to indicate or prevent the following conditions:

- High differential pressure across each catalyst bed.
- Loss of ammonia gas supply to the nitrogen oxides selective catalytic reduction unit.
- Failure of the electric heater.
- Ammonia analyzer to indicate ammonia slip in the outlet.
- Low offgas temperature entering the unit.
- High temperature differential across the unit.
- High nitrogen oxide concentration in the unit outlet stream.
- High volatile organic compound concentration in the unit outlet stream.

Offgas Caustic Scrubber (LVP-SCB-00001)

The LAW Melters' offgas Caustic Scrubber miscellaneous treatment unit sub-system further treats the offgas by removing iodine and acid gases and providing final offgas cooling. The offgas stream enters

the bottom of the scrubber and flows upward through a packed bed. Contaminants in the offgas stream are absorbed into the liquid stream through interaction of the gas, liquid, and packing media. To neutralize the collected acid gases, a sodium hydroxide solution is added periodically to the LAW Caustic Collection Tank (LVP-TK-00001). The clean offgas is then discharged through an internal mist eliminator to prevent droplet carryover. The scrubbing liquid flows downward through the packing bed and drains into the LAW Caustic Collection Tank (LVP-TK-00001). The contents of this tank are periodically transferred to the ~~pretreatment facility.~~PTF or the EMF. After passing through the Caustic Scrubber (LVP-SCB-00001) and the Melter Offgas Exhausters (LVP-EXHR-00001A/B/C), the offgas is released to the environment via a flue in the plant stack.

In addition to the instrumentation, alarms, controls, and interlocks addressed in Appendix 4E, the following will be provided for the Caustic Scrubber to indicate or prevent the following conditions:

- Loss of recirculation pump.
- Loss of caustic supply.
- Loss of process water supply.
- High differential pressure across the column.
- Low scrubbing liquid level.
- High scrubbing liquid level.
- Loss of transfer pump.
- Low pH.
- High specific gravity (density).

Table 4E-1 LAW Vitrification Facility Tank Systems						
No.	**System**	**Vessel Number/Location**	**Description**	**Material**	**Total Volume (US Gallons)**	**Approximate Dimensions (Inside Diameter) × Height or Length in feet and inches (tangent line/tangent line)**
1	LCP	LCP-VSL-00001 L-0123	LAW Melter 1 Concentrate Receipt Vessel	Stainless Steel	18,130	14’-0” 12’-9”
2	LCP	LCP-VSL-00002 L-0124	LAW Melter 2 Concentrate Receipt Vessel	Stainless Steel	18,130	14’-0” 12’-9”
3	LFP	LFP-VSL-00001 L-0123	Melter 1 Feed Preparation Vessel	Stainless Steel	9,123	11’-0” 10’-6”
4	LFP	LFP-VSL-00002 L-0123	Melter 1 Feed Vessel	Stainless Steel	9,123	11’-0” 10’-6”
5	LFP	LFP-VSL-00003 L-0124	Melter 2 Feed Preparation Vessel	Stainless Steel	9,123	11’-0” 10’-6”
6	LFP	LFP-VSL-00004 L-0124	Melter 2 Feed Vessel	Stainless Steel	9,123	11’-0” 10’-6”
7	LVP	LVP-TK-00001 L-0218	LAW Caustic Collection Tank	Stainless Steel	14,232	13’-0’ (od) 14’-4”
8	LOP	LOP-VSL-00001 L-0123	LAW Melter 1 SBS Condensate Vessel	Hastelloy	9,056	12’-0” 8’-2”
9	LOP	LOP-VSL-00002 L-0124	LAW Melter 2 SBS Condensate Vessel	Hastelloy	9,056	12’-0” 8’-2”

Table 4E-1 LAW Vitrification Facility Tank Systems						
No.	**System**	**Vessel Number/Location**	**Description**	**Material**	**Total Volume (US Gallons)**	**Approximate Dimensions (Inside Diameter) × Height or Length in feet and inches (tangent line/tangent line)**
10	RLD	RLD-VSL-00003 L-0126	Plant Wash Vessel	6% Mo/Stainless Steel	25,780	16’-0” 15’-5”
11	RLD	RLD-VSL-00004 L-B001B	LAW C3/C5 Drains/Sump Collection Vessel	Stainless Steel/Inconel 625	7,696	10’-0” 11’-0”
12	RLD	RLD-VSL-00005 L-0126	SBS Condensate Collection Vessel	6% Mo/Stainless Steel	25,780	16’-0” 15’-5”

Table 4E-2 LAW Vitrification Facility Miscellaneous Units (Systems and Sub-Systems)					
No.	**System/ Subsystem**	**Component Number/Location**	**Description**	**Material**	**Total Volume (US Gallons)**
LAW Vitrification Facility					
1	LOP	LOP-FCLR-00001 L-0112	Melter 1 Primary Film Cooler	Stainless Steel	NA
2	LOP	LOP-FCLR-00002 L-0112	Melter 1 Standby Film Cooler	Stainless Steel	NA
3	LOP	LOP-FCLR-00003 L-0112	Melter 2 Primary Film Cooler	Stainless Steel	NA
4	LOP	LOP-FCLR-00004 L-0112	Melter 2 Standby Film Cooler	Stainless Steel	NA
5	LOP	LOP-SCB-00001 L-0123	Melter 1 Submerged Bed Scrubber	Ceramic Packing/Hastelloy	4,948
6	LOP	LOP-SCB-00002 L-0124	Melter 2 Submerged Bed Scrubber	Ceramic Packing/Hastelloy	4,948
7	LOP	LOP-WESP-00001 L-0123	Melter 1 Wet Electrostatic Precipitator	6% Molybdenum/Stainless Steel	N/A
8	LOP	LOP-WESP-00002 L-0124	Melter 2 Wet Electrostatic Precipitator	6% Molybdenum/Stainless Steel	N/A
9	LMP	LMP-MLTR-00001 L-0112	LAW Melter 1	Stainless Steel/Alloys	1,860

Table 4E-2 LAW Vitrification Facility Miscellaneous Units (Systems and Sub-Systems)					
No.	**System/ Subsystem**	**Component Number/Location**	**Description**	**Material**	**Total Volume (US Gallons)**
10	LMP	LMP-MLTR-00002 L-0112	LAW Melter 2	Stainless Steel/Alloys	1,860
11	LVP	LVP-SCB-00001 L-0304F	Melter Offgas Caustic Scrubber	Hastelloy/Metal Intalox Packing/Stainless Steel	TBD
12	LVP	LVP-HEPA-00001A L-0304H	Melter Offgas HEPA Filter	Synthetic Fibrous Materials/Stainless Steel	NA
13	LVP	LVP-HEPA-00001B L-0304H	Melter Offgas HEPA Filter	Synthetic Fibrous Materials/Stainless Steel	NA
14	LVP	LVP-HEPA-00002A L-0304H	Melter Offgas HEPA Filter	Synthetic Fibrous Materials/Stainless Steel	NA
15	LVP	LVP-HEPA-00002B L-0304H	Melter Offgas HEPA Filter	Synthetic Fibrous Materials/Stainless Steel	NA
16	LVP	LVP-HEPA-00003A L-0304H	Melter Offgas HEPA Filter	Synthetic Fibrous Materials/Stainless Steel	NA
17	LVP	LVP-SCO-00001 (located on LVP SKID-00002) L-0304F	Thermal Catalytic Oxidizer	Stainless Steel	NA
18	LVP	LVP-SCR-00001 (located on LVP SKID-00002) L-0304F	NOx Selective Catalytic Reduction Unit	Stainless Steel	NA
19	LVP	LVP-HTR-00001A	Melter Offgas HEPA Preheater	Stainless Steel/Incoloy 800	NA

Table 4E-2 LAW Vitrification Facility Miscellaneous Units (Systems and Sub-Systems)					
No.	**System/ Subsystem**	**Component Number/Location**	**Description**	**Material**	**Total Volume (US Gallons)**
		L-0304H			
20	LVP	LVP-HTR-00001B L-0304H	Melter Offgas HEPA Preheater	Stainless Steel/Incoloy 800	NA
21	LVP	LVP-HTR-00002 (located on LVP SKID-00002) L-0304F	Catalytic Oxidizer Electric Heater	Stainless Steel	NA
22	LVP	LVP-HX-00001 (located on LVP SKID-00002) L-0304F	Catalytic Oxidizer Heat Recovery Unit	Stainless Steel	NA
23	LVP	LVP-ADBR-00001A (located on LVP-SKID-00001) L-0304F	Offgas Mercury Adsorber	Stainless Steel	NA
24	LVP	LVP-ADBR-00001B (located on LVP-SKID-00001) L-0304F	Offgas Mercury Adsorber	Stainless Steel	NA
25	LVP	LVP-EXHR-00001A L-0304C	Melter Offgas Exhausters	Stainless Steel	NA
26	LVP	LVP-EXHR-00001B L-0304D	Melter Offgas Exhausters	Stainless Steel	NA
27	LVP	LVP-EXHR-00001C L-0304E	Melter Offgas Exhausters	Stainless Steel	NA

Table 4E-3 LAW Vitrification Facility Secondary Containment Rooms/Areas				
Room/Area	**Approximate Room/Area Dimensions (L×W, in feet)**	**Miscellaneous Treatment Units or Tanks in Room/Area (Largest Plant Item)**	**Volume of Largest Plant Item in Room/Area (US Gallons)**	**Minimum Secondary Containment Height (feet)**
LAW Vitrification Facility				
1. L-0123, Melter 1 Process Cell	Minimum secondary containment for these cells has been deleted and superceded by *Flooding Volume for LAW Facility*, 24590-LAW-PER-M-02-002 (DWP, Operating Unit Group, Appendix 9.8).			
2. L-0124, Melter 2 Process Cell				
3. L-0126, Effluent Cell				
4. L-B001B, C3/C5 Drains/Sump Collection Vessel Room				
5. L-0218, Caustic Scrub Blowdown Collection Berm				
6. L-0304 F, Caustic Scrubber Curb Area				
7. ASX Sampler Cabinets • ASX-SMPLR-00012 (L-0301) • ASX-SMPLR-00013 (L-0301)	Secondary containment liners for Isolok flush tubing, no minimum liner height required. The LAW ASX sampler upper secondary containment area liner dimensions are approximately 33” X 34”. The lower containment area liner dimensions are approximately 39” X 68”			
8. Bulges • LCP-BULGE-00001 (L-0202) • LCP-BULGE-00002 (L-0202) • LCP-BULGE-00003 (L-0202) • LFP-BULGE-00001 (L-0202) • LFP-BULGE-00002 (L-0202) • LOP-BULGE-00001 (L-0202) • LOP-BULGE-00002 (L-0202)	Secondary containment for ancillary equipment, no minimum liner height required			

Table 4E-3 LAW Vitrification Facility Secondary Containment Rooms/Areas				
Room/Area	**Approximate Room/Area Dimensions (L×W, in feet)**	**Miscellaneous Treatment Units or Tanks in Room/Area (Largest Plant Item)**	**Volume of Largest Plant Item in Room/Area (US Gallons)**	**Minimum Secondary Containment Height (feet)**
• RLD-BULGE-00001 (L-B001A) • RLD-BULGE-00004 (L-0202)				

Table 4E-4 LAW Vitrification Facility Sumps, Leak Detection Boxes, and Floor Drains/Lines				
Sump/Leak Detection Box or Floor Drain/Line I.D.#, Room, and Elevation	**Maximum Sump/Leak Detection Box Capacity (US Gallons)**	**Sump/Leak Detection Box Level Detection Type**	**Sump/Leak Detection Box or Floor Drain/Line Dimensions (approximate) and Materials of Construction**	**Piping and Instrumentation Diagram Number**
LAW Vitrification Facility				
Sumps				
RLD-SUMP-00028 L-B001B (C3/C5 Drains/Sump Collection Vessel Cell, El. –21’)	59	Radar	24” Dia. x 30” Deep Stainless Steel (6% Mo)	**24590-LAW** -M6-RLD-00002005
RLD-SUMP-00029 L-0123 (Process Cell, El. 3’	37	Radar	30” Dia. x 12” Deep Stainless Steel (6% Mo)	**24590-LAW** -M6-RLD-00003002
RLD-SUMP-00030 L-0123 (Process Cell, El. 3’)	37	Radar	30” Dia. x 12” Deep Stainless Steel (6% Mo)	**24590-LAW** -M6-RLD-00003002

Table 4E-4 LAW Vitrification Facility Sumps, Leak Detection Boxes, and Floor Drains/Lines				
Sump/Leak Detection Box or Floor Drain/Line I.D.#, Room, and Elevation	**Maximum Sump/Leak Detection Box Capacity (US Gallons)**	**Sump/Leak Detection Box Level Detection Type**	**Sump/Leak Detection Box or Floor Drain/Line Dimensions (approximate) and Materials of Construction**	**Piping and Instrumentation Diagram Number**
RLD-SUMP-00031 L-0124 Process Cell Sump, El. 3')	37	Radar	30" Dia. x 12" Deep Stainless Steel (6% Mo)	**24590-LAW** -M6-RLD-00003002
RLD-SUMP-00032 L-0124 (Process Cell, El. 3')	37	Radar	30" Dia. x 12" Deep Stainless Steel (6% Mo)	**24590-LAW** -M6-RLD-00003002
RLD-SUMP-00035 L-0126 (Effluent Cell, El. 3')	37	Radar	30" Dia. x 12" Deep Stainless Steel (6% Mo)	**24590-LAW** -M6-RLD-00003003
RLD-SUMP-00036 L-0126 (Effluent Cell, El. 3')	37	Radar	30" Dia. x 12" Deep Stainless Steel (6% Mo)	**24590-LAW** -M6-RLD-00003003
Bulges/Floor Drains				
RLD-FD-00001 Floor Drain L-B001B (RLD-BULGE-00001 Drain, El. -21')	N/A	N/A	2" Dia. 316L	**24590-LAW** -M6-RLD-00002003
RLD-FD-00035 Floor Drain L-0126 (RLD-BULGE-0000-4 Drain El. 3')	N/A	N/A	2" Dia. 6% Mo	**24590-LAW** -M6-RLD-00001005
LOF-FD-00001 Floor Drain L-0123 (LOP-BULGE-00001 drain El. 3)	N/A	N/A	2" Dia. 6% Mo	**24590-LAW** -M6-LOP-00001003

Table 4E-4 LAW Vitrification Facility Sumps, Leak Detection Boxes, and Floor Drains/Lines				
Sump/Leak Detection Box or Floor Drain/Line I.D.#, Room, and Elevation	**Maximum Sump/Leak Detection Box Capacity (US Gallons)**	**Sump/Leak Detection Box Level Detection Type**	**Sump/Leak Detection Box or Floor Drain/Line Dimensions (approximate) and Materials of Construction**	**Piping and Instrumentation Diagram Number**
LCP-FD-00001 Floor Drain L-0123 (LCP-BULGE-00001 Drain, El. 3')	N/A	N/A	2" Dia. 316L	**24590-LAW** -M6-LCP-00001001
LCP-FD-00002 Floor Drain L-0123 (LCP-BULGE-00002 Drain, El. 3')	N/A	N/A	2" Dia. 316L	**24590-LAW** -M6-LCP-00001004
LFP-FD-00001 Floor Drain L-0123 (LFP-BULGE-00001 Drain, El. 3)	N/A	N/A	2" Dia. 316L	**24590-LAW** -M6-LFP-00001005
LOP-FD-00002 Floor Drain L-0124 (LOP-BULGE-00002 Drain, El. 3)	N/A	N/A	2" Dia. 6% Mo	**24590-LAW** -M6-LOP-00002003
LCP-FD-00003 Floor Drain L-0124 (LCP-BULGE-00003 Drain, El. 3)	N/A	N/A	2" Dia. 316L	**24590-LAW** -M6-LCP-00002001
LFP-FD-00002 Floor Drain L-0124 (LFP-BULGE-00002 Drain, El. 3)	N/A	N/A	2" Dia. 316L	**24590-LAW** -M6-LFP-00003005
LVP-FD-00001 Floor Drain L-0218 (Berm floor drain for LVP-TK-00001, El. 28')	N/A	N/A	4" Dia. 316L	**24590-LAW** -M6-LVP-00002003
RLD-FD-00025 Floor Drain L-0304F (Curb floor drain for LVP-TK-00001, El. 48')	N/A	N/A	4" Dia. 316L	**24590-LAW** -M6-RLD-00003001
Drain Lines				
RLD-WS-20037-S11B-01 Drain Line	N/A	N/A	1" Dia.	**24590-LAW**

Table 4E-4 LAW Vitrification Facility Sumps, Leak Detection Boxes, and Floor Drains/Lines				
Sump/Leak Detection Box or Floor Drain/Line I.D.#, Room, and Elevation	**Maximum Sump/Leak Detection Box Capacity (US Gallons)**	**Sump/Leak Detection Box Level Detection Type**	**Sump/Leak Detection Box or Floor Drain/Line Dimensions (approximate) and Materials of Construction**	**Piping and Instrumentation Diagram Number**
L-0123 (Melter 1 Encasement Assembly Drain, El. 3')			316L	-M6-LMP-00012001
RLD-WS-20033-S11B-11 Drain Line L-0124 (Melter 2 Encasement Assembly Drain, El. 3')	N/A	N/A	1" Dia. 316L	**24590-LAW** -M6-LMP-00042001
Autosampler Drain Lines				
RLD-WU-22123-S11B-03 ASX Sampler 00012 Lower Containment Drain Line (L-0301, El. 48')	N/A	Thermal Dispersion	3" Dia. Stainless Steel 316L	**24590-LAW** -M6-RLD-00003001
RLD-WU-22117-S11B-03 ASX Sampler 00013 Lower Containment Drain Line (L-0301, El. 48')	N/A	Thermal Dispersion	3" Dia. Stainless Steel 316L	**24590-LAW** -M6-RLD-00003001

Table 4E-5 LAW Vitrification Facility Containment Buildings Summary	
Location	**Approximate Room Dimensions (L × W × H in feet)**
LAW Vitrification Facility	
1. L-0112 LAW LSM Gallery Containment Building	150 x 62 x 24
2. ~~LAW~~ILAW Container Finishing Containment Building:	
L-0109B Swabbing Area Line 2	21 × 15 × 24
L-0109C Decontamination Area Line 2	18 × 15 × 24
L-0109D Inert Fill Area Line 2	55 × 15 × 24
L-0115B Swabbing Area Line 1	21 × 15 × 24
L-0115C Decontamination Area Line 1	18 × 15 × 24
L-0115D Inert Fill Area Line 1	55 × 15 × 24
L-0109E Container Monitoring/Export Area	19 × 18 × 14
L-0115E Container Monitoring/Export Area	19 × 18 × 14
3. L-0119B LAW Consumable Import/Export Containment Building	30 x 28 x 17
4. L-0226A LAW C3 Workshop Containment Building	34 x 22 x 19
5. LAW Pour Cave Containment Building:	
L-B015A Melter 1 Pour Cave	16.5 × 20 x 23
L-B013C Melter 1 Pour Cave	16.5 × 20 x 23
L-B013B Melter 2 Pour Cave	16.5 × 20 x 23
L-B011C Melter 2 Pour Cave	16.5 × 20 x 23

Table 4E-5 LAW Vitrification Facility Containment Buildings Summary	
Location	**Approximate Room Dimensions (L × W × H in feet)**
L-B011B Future Melter 3 Pour Cave	16.5 × 20 x 23
L-B009B Future Melter 3 Pour Cave	16.5 × 20 x 23
6. ~~LAW~~ILAW Container Buffer Storage Containment Building:	
L-B025C Container Buffer Store	22 x 22 x 23
L-B025D Container Rework	22 x 14 x 23

APPENDIX 4G
DIRECT FEED LOW-ACTIVITY WASTE (EFFLUENT MANAGEMENT FACILITY)

This page intentionally left blank.

APPENDIX 4G
DIRECT FEED LOW-ACTIVITY WASTE (EFFLUENT MANAGEMENT FACILITY)

TABLE OF CONTENTS

1 4G DIRECT FEED LOW-ACTIVITY WASTE (EFFLUENT MANAGEMENT FACILITY) 1
2 4G.1 CONTAINERS 4
3 4G.2 TANK SYSTEMS 4
4G.2.1 Low-Point Drain Vessel (DEP-VSL-00001) 4
4G.2.2 Evaporator Feed Vessel (DEP-VSL-00002) 5
4G.2.3 Evaporator Concentrate Vessels (DEP-VSL-00003A/B/C) 6
4G.2.4 Overhead Sampling Vessels (DEP-VSL-00004A/B) 6
4G.2.5 Process Condensate Lag Storage Vessels (DEP-VSL-00005A/B) 7
4 4G.3 MISCELLANEOUS UNITS 7
4G.3.1 Evaporator Separator Vessel (DEP-EVAP-00001) 7
4G.3.2 Evaporator Primary Condenser (DEP-COND-00001) 8
4G.3.3 Evaporator Inter-Condenser (DEP-COND-00002) 8
4G.3.4 Evaporator After-Condenser (DEP-COND-00003) 8
4G.3.5 Process Condensate Filter (DEP-FILT-00002) 8
4G.3.6 Evaporator Feed Prefilter (DEP-FILT-00003) 9
4G.3.7 Condensate Duplex Cartridge Filters (DEP-FILT-00004A/B) 9
4G.3.8 Evaporator Concentrate/Feed Vessels LAW Effluent Cooler (DEP-HX-00001) 9
4G.3.9 Evaporator Reboiler (DEP-RBLR-00001) 9
5 4G.4 SECONDARY CONTAINMENT AND RELEASE DETECTION FOR EMF 9
4G.4.1 Low-Point Drain Sump (DEP-SUMP-00001) 10
4G.4.2 Pipeline Containment and Leak Detection 10
4G.4.3 Evaporator Secondary Containment System 11
4G.4.4 Evaporator Condenser Secondary Containment System 11
4G.4.5 Process Condensate Vessel Area Sumps (DEP-SUMP-00005A/B) 12
4G.4.6 Feed Vessel Area Sumps (DEP-SUMP-00004A/B) 12
6 4G.5 AIR EMISSION CONTROL 13
4G.5.1 Direct Feed LAW EMF Vessel Vent Process System (DVP) 13
7 4G.6 EMF PROCESS SAMPLING 13

TABLES

8 Table 4G-1 Effluent Management Facility Tank Systems 15
9 Table 4G-2 Effluent Management Facility Miscellaneous Units (Systems and Sub-Systems) 15

Table 4G-3 Effluent Management Facility Secondary Containment Rooms/Areas 17
Table 4G-4 Effluent Management Facility Sumps, Leak Detection Boxes, Drain Lines/ Floor Drains 17

This page intentionally left blank.

4G Direct Feed Low-Activity Waste (Effluent Management Facility)

The Direct Feed Low-Activity Waste (DFLAW) configuration allows for the operation of the LAW Vitrification Facility and Analytical Laboratory (Lab) prior to operation of the Pretreatment Facility. In this configuration, low-activity waste is fed directly from the Hanford Tank Farms LAW Pretreatment System (LAWPS) to the LAW Vitrification Facility. The LAWPS is permitted as a separate Treatment, Storage, and Disposal Facility under the Hanford Dangerous Waste Permit. The DFLAW configuration differs from the baseline configuration. In the baseline configuration, low-activity waste and high-activity waste is transferred directly from the Hanford Tank Farms to the Pretreatment Facility and treated by ultrafiltration and cesium ion exchange before transfer to the LAW Vitrification Facility or High-Level Waste (HLW) Vitrification Facility; in addition, the generated off-gas effluents from the LAW Vitrification Facility and HLW Vitrification Facility processes are returned to the Pretreatment Facility. In the DFLAW configuration, low-activity waste bypasses the Pretreatment Facility and feeds directly into the LAW Vitrification Facility. As such, the replication of some functions of the Pretreatment Facility is required. The Effluent Management Facility (EMF) is in place to replicate activities conducted in the baseline configuration, including the management and treatment of the liquid effluent from the LAW Vitrification Facility Radioactive Liquid Waste Disposal (RLD) System and the Lab RLD System, and management of the effluent from the LAW Secondary Offgas/Vessel Vent Process (LVP) System. Waste received at the LAW Vitrification Facility from the LAWPS will not be characterized as ignitable (D001) or reactive (D003); therefore, tanks/vessels associated with the DFLAW configuration are not required to be designed to manage reactive or ignitable wastes.

Permitted processes involved with the DFLAW configuration include the Direct Feed LAW EMF Process (DEP) System, the Direct Feed LAW EMF Vessel Vent Process (DVP) System, and the underground waste transfer lines.

Direct Feed LAW EMF Process (DEP) System

The DEP System allows the EMF to collect, process, recycle, and dispose of the liquid effluent from the Lab, LAW Vitirification Facility, and underground waste transfer line flushes. The DEP System performs the following functions:

- Receipt of liquid effluent;
- Liquid effluent volume reduction;
- Process stream sampling;
- Waste conditioning.

The DEP System includes the following major components:

- An evaporator system consisting of an evaporator separator vessel (DEP-EVAP-00001), evaporator reboiler (DEP-RBLR-00001), evaporator condensers (DEP-COND-0001/2/3), recirculation pump and vacuum ejectors;
- Low-Point Drain Vessel (DEP-VSL-00001);
- Evaporator Feed Vessel (DEP-VSL-00002);
- Evaporator Concentrate Vessels (DEP-VSL-00003A/B/C);
- Overhead Sampling Vessels (DEP-VSL-00004A/B);
- Process Condensate Lag Storage Vessels (DEP-VSL-00005A/B);
- Other equipment, including pumps, filters, and associated piping and valves.

The DEP System evaporator loop functions to reduce the volume of liquid effluent that is received from the LAW Vitrification Facility, Lab and underground waste transfer line flushes, and recycle the concentrate back to the LAW Vitrification Facility. The design also supports the transfer of the concentrate to the Hanford Tank Farms and to the tanker truck load out area. Condensate from the DEP System process can be disposed of at the Liquid Effluent Retention Facility (LERF)/ Effluent Treatment Facility (ETF).

The evaporator loop consists of the evaporator separator vessel, reboiler, condensers, and the recirculation piping. As the liquid effluent circulates through the reboiler, the temperature rises. Then, the liquid rises into the separator vessel, the hydrostatic head diminishes, and flash evaporation occurs near the liquid surface. The liquid stream recirculates in the closed loop while the vapor stream enters the evaporator overheads. The evaporator loop operates under a vacuum to reduce the boiling temperatures and minimize corrosion.

The reboiler is a tube-and-shell heat exchanger. High pressure steam, supplied from the Balance of Facilities (BOF), is used to heat a secondary steam loop that feeds the heat exchanger shell side, while the evaporator feed circulates through the heat exchanger tubes.

Direct Feed LAW EMF Vessel Vent Process (DVP) System

The DVP System is comprised of two main parts, air inlet and exhaust. The DVP System provides vessel ventilation for the DEP System vessels, the purpose of the DVP System is to direct vessel vent gases to emission control systems, and purge hydrogen to maintain the vessel hydrogen concentration below dangerous levels.

The DVP System includes the following major components:

- Process Ventilation Preheaters (DVP-HTR-00001A/B);
- Process Ventilation Primary HEPA Filters (DVP-HEPA-00003A/B)
- Process Ventilation Secondary HEPA Filters (DVP-HEPA-00004A/B);
- Process Ventilation Exhausters (DVP-EXHR-00001A/B).

For the DEP System vessels in the LAW Effluent Process Building, a purge air inbleed is used to meet the very low required flow rates. The vessel vent is the exhaust portion of the DVP System and provides suction pressure on the vessel headspace, to draw in the purge air, and mitigate hydrogen accumulation. The discharged air is sent through a preheater, two-stage HEPA filters, and through an exhaust fan to discharge out of the EMF stack. The DVP exhaust fans control and maintain the suction pressure inside the various process vessels, maintaining the continuous purge air inbleed.

Underground Waste Transfer Lines

The underground waste transfer lines installed to support the DFLAW configuration are coaxial lines that are constructed of stainless steel primary pipe, with a carbon steel encasement pipe that is coated with fusion bonded epoxy (FBE). The coating system and water barrier consist of the FBE, polyurethane insulation, and a jacket or thermoplastic outer water barrier made of high density polyethylene (HDPE). Cathodic protection is not needed for the underground waste transfer lines installed to support the DFLAW configuration as the pipe system is made of corrosion resistant materials, providing water resistant construction to isolate the underground waste transfer lines from the soil and moisture.

The underground waste transfer lines transfer waste from various areas to support the DFLAW configuration. Underground waste transfer lines support the receipt of the low-activity waste from LAWPS to the LAW Vitrification Facility, as well as effluent transfers from LAW Vitrification Facility

and Lab, to the EMF and the LERF/ETF. Evaporator concentrate is sent back to the LAW Vitrification Facility through the LAWPS underground waste transfer line. In addition, liquid effluent can be transferred from the DEP System to the Hanford Tank Farms.

After every waste transfer from the LAWPS to LAW Vitrification Facility, the underground waste transfer lines are flushed and drained to the EMF low-point drain vessel (DEP-VSL-00001); the effluent is collected and processed at the EMF. The effluent is monitored for flow and density to minimize the volume of flush liquid that is transferred to the LAW concentrate receipt vessel.

There are eight major WTP underground waste transfer lines that support the EMF process. Line DEP-PB-00009-S32B-03 transfers LAWPS feed from the WTP property boundary to the low-point drain vessel. Line LCP-PB-03368-S32B-03 transfers LAWPS feed and EMF concentrate from the low-point drain vessel to the LAW Vitrification Facility. LAW LVP process effluent and LAW RLD process effluent are transferred from the LAW Vitrification Facility to the EMF through line LVP-ZY-00171-W31A-03. Lab RLD process effluent is transferred from the Lab to the EMF through line RLD-WU-22142-S32B-03. Line DEP-ZS-00069-W31A-03 returns EMF concentrate from the EMF to the WTP property boundary, with transfer to the Hanford Tank Farms. EMF effluent is transferred to the existing LERF/ETF transfer line that connects in between the Pretreatment Facility and the WTP property boundary through lines RLD-ZS-66989-W31A-04 and RLD-ZS-66991-W31A-03.

EMF Buildings

The EMF, located north of the Lab, is comprised of four buildings, the LAW effluent process building, the LAW effluent drain tank building, the LAW effluent electrical building, and the LAW effluent utility building. The EMF contains an evaporator system, nine major process vessels, three supporting reagent product storage tanks, heating, ventilation and air conditioning (HVAC) equipment, and electrical utilities. The buildings are described in more detail below.

Building 25 – LAW Effluent Process Building

The LAW effluent process building houses the DEP System and DVP System. The DEP System is the main process system for the EMF and consists of vessels and ancillary equipment used to support the collection, processing, and disposal of the mixed waste effluent from the LAW and Lab Facilities; a more detailed discussion of the processes contained in this building are located in section 4G.2 and 4G.3. The DVP System provides vessel ventilation for the DEP System vessels. A more detailed discussion of this system can be found in 4G.5.

Building 25A – LAW Effluent Drain Tank Building

The LAW effluent drain tank building consists of the low-point drain vessel (DEP-VSL-00001) and the drain tank maintenance area. The low-point drain vessel is sized to handle flushing of the DFLAW underground waste transfer lines, between the LAWPS and the LAW Vitrification Facility and the effluent lines between the LAW Vitrification Facility, the Lab and the EMF. A more detailed discussion of the processes contained in this building are located in 4G.2.

Building 26 – LAW Effluent Utility Building

The LAW effluent utility building contains the building ventilation HVAC high efficiency particulate air (HEPA) filters and fans, and the BOF utility pumps and storage vessels. The LAW effluent utility building shares a ventilation system with the LAW effluent process building. The building does not contain equipment that manages dangerous or mixed waste.

Building 27 – LAW Effluent Electrical Building

The LAW effluent electrical building houses most of the EMF electrical equipment, which includes electrical batteries and control/instrumentation equipment. It has a separate power supply and exhaust system. The building does not contain equipment that manages dangerous or mixed waste.

Figure 4G-1, EMF Process Flow, presents a simplified process flow diagram of the EMF Process.

4G.1 Containers

The dangerous and mixed waste generated at the EMF is managed in 90-day accumulation areas and satellite accumulation areas pursuant to the requirements in WAC 173-303-200, generating dangerous waste on-site. All waste anticipated to be dangerous or mixed waste is managed in accordance with WAC 173-303-170, requirements for generators of dangerous waste, through WAC 173-303-230, special conditions. The dangerous and mixed waste is labeled and characterized in accordance with requirements in WAC 173-303-070, designation of dangerous waste. Information on all 90-day accumulation areas and satellite accumulation areas is maintained as required in the Hanford Dangerous Waste Permit, Part II General Facility Conditions, permit condition II.I.1.a.

The dangerous and mixed waste generated at the EMF is containerized secondary waste. The following are examples of the generated secondary waste:

- Spent or failed equipment
- Offgas HEPA filters
- Personal Protective Equipment
- Spent maintenance materials

4G.2 Tank Systems

Permitted tank systems are designed to comply with bounding design criteria, such as pH, temperature, and pressure conditions. The EMF evaporator feed vessel (DEP-VSL-00002), the overhead sampling vessels (DEP-VSL-00004A/B), evaporator concentrate vessels (DEP-VSL-00003A/B/C), and the process condensate lag storage vessels (DEP-VSL-00005A/B) are located outside in secondary containment areas. The remaining EMF process vessel, the low-point drain vessel (DEP-VSL-00001), is located indoors, in a below grade process area. All tank systems are located within process areas with controlled access.

In general, overflows are prevented by inventory controls in conjunction with level monitoring. The fluid level in a vessel is maintained within low- and high-level ranges. Appropriate alarm settings are used to note deviations from the designed settings. Automatic and operator alarm responses are designed to shut down feed to the vessel when the high-level settings are exceeded.

A list of all EMF tank systems can be found in Table 4G-1, Effluent Management Facility Tank Systems.

4G.2.1 Low-Point Drain Vessel (DEP-VSL-00001)

The low-point drain vessel (DEP-VSL-00001) is located below grade, within an enclosed room (ED-B001), in the LAW effluent drain tank building. The low-point drain vessel collects effluent from

underground waste transfer line flushes, including effluent from flushes of the underground waste transfer lines.

The low-point drain vessel also collect effluent from the DEP System concentrate transfer line relief valve; west process area sumps (DEP-SUMP-00002A/B), feed vessel area sumps (DEP-SUMP-00004A/B), tanker truck loadout sump (DEP-SUMP-00008); and the drains from the evaporator concentrate/feed vessels LAW effluent cooler (DEP-HX-00001). In addition, the low-point drain vessel collects overflow from several DEP System process vessels, including the evaporator feed vessel (DEP-VSL-00002), evaporator concentrate vessels (DEP-VSL-00003A/B/C), overhead sampling vessels (DEP-VSL-00004A/B), and process condensate lag storage vessels (DEP-VSL-00005A/B), as well as effluent from the sampler return line, evaporator drain line, fume hood drain line, and off-specification evaporator concentrate drain line.

The vessel drain line, overflow pipe, and the low-point drain sump (DEP-SUMP-00001) are decontaminated with demineralized water. The demineralized water used for decontamination is ultimately sent to LERF/ETF.

The low-point drain vessel is equipped with a vessel agitator (DEP-AGT-00001) to help prevent buildup of settled solids in the waste. The agitator has a manual start and operates when transferring or sampling liquid. The low-point drain vessel is vented to the vessel vent header and overflows to the low-point drain area sump through a loop seal. This sump effluent is transferred to the evaporator feed prefilter (DEP-FILT-00003) and then to the evaporator feed vessel by the low-point drain vessel area sump pump. In-vessel pumps (DEP-PMP-00001A/B) are used to transfer the low-point drain vessel contents to the evaporator feed vessel through the evaporator feed prefilter. The evaporator feed prefilter is used to keep any solids larger than 5 microns from entering the evaporator process.

4G.2.2 Evaporator Feed Vessel (DEP-VSL-00002)

The evaporator feed vessel (DEP-VSL-00002) receives filtered effluent from multiple sources and caustic solution from the caustic tank (SHR-TK-00013) for pH adjustment.

Effluent from the LAW plant wash vessel (RLD-VSL-00003), the RLD submerged bed scrubber condensate collection vessel (RLD-VSL-00005), the Lab RLD vessel (RLD-VSL-00164), and the low-point drain vessel (DEP-VSL-00001) are collected in the evaporator feed vessel prior to transfer to the evaporator separator vessel (DEP-EVAP-00001).

The evaporator feed vessel also receives off-specification effluent from the overhead sampling vessels (DEP-VSL-00004A/B), off-specification concentrate from the evaporator separator vessel (DEP-EVAP-00001), and sump effluent from the low-point drain sump (DEP-SUMP-00001).

The evaporator system concentrates the feed from the evaporator feed vessel to reduce the overall effluent volume for recycle to the LAW Vitrification Facility, or for transfer to the Hanford Tank Farms and the tanker truck load out area. In addition, the evaporator system provides an overhead condensate that can be processed by LERF/ETF.

The evaporator feed vessel is equipped with eductors to mix vessel contents to support sampling. The eductors circulate fluid from the evaporator feed vessel using recirculation pumps and operate while the pumps are running. In the event of an off-normal condition within the EMF, the evaporator feed vessel recirculation pumps can bypass

the evaporator separator vessel and transfer effluent to the Hanford Tank Farms after passing through the evaporator concentrate/feed vessels LAW effluent cooler (DEP-HX-00001).

4G.2.3 Evaporator Concentrate Vessels (DEP-VSL-00003A/B/C)

The evaporator concentrate vessels (DEP-VSL-00003A/B/C) are used to accumulate concentrated effluent from the evaporator separator vessel (DEP-EVAP-00001). In addition, the evaporator concentrate vessels may receive filter backflush from the evaporator feed prefilter (DEP-FILT-00003) and caustic solution from the caustic tank (SHR-TK-00013). The concentrate effluent can either be recycled back to the LAW LCP vessels (LCP-VSL-00001/2), to the Hanford Tank Farms, or to the tanker truck load out area. In the event of an overflow, the liquid flows by gravity into the low-point drain vessel (DEP-VSL-00001). Each batch is sampled in the evaporator concentrate vessels and characterized before it is sent to the LAW Vitrification Facility or the Hanford Tank Farms.

The evaporator concentrate transfer pumps (DEP-PMP-00003A/B) are used to circulate fluid from the evaporator concentrate vessels via eductors. The evaporator concentrate pumps also transfer the evaporator concentrate vessels' contents to LAW LCP vessels, the Hanford Tank Farms, or the tanker truck load out area.

When transferring concentrate to the Hanford Tank Farms, the effluent stream must comply with the Hanford Tank Farm waste acceptance criteria. The evaporator concentrate transfer pumps transfer the effluent through the evaporator feed prefilter (DEP-FILT-00003) to remove solids, the filtered effluent is mixed with process condensate and sodium nitrite, as necessary, and then the effluent is sent through the evaporator concentrate/feed vessel LAW effluent cooler (DEP-HX-00001) before being sent to the Hanford Tank Farms.

4G.2.4 Overhead Sampling Vessels (DEP-VSL-00004A/B)

The overhead sampling vessels (DEP-VSL-00004A/B) receive inter and after condenser condensate from the evaporator primary condenser (DEP-COND-00001), inter-condenser (DEP-COND-00002) and the after-condenser (DEP-COND-00003), caustic scrubber fluids from the LVP system (LVP-TK-00001), off-specification condensate from the process condensate lag storage vessels (DEP-VSL-00005A/B), effluent from west process area sumps (DEP-SUMP-00002A/B), effluent from the feed vessel area sumps (DEP-SUMP-00004A/B) and liquid from the non-radioactive liquid waste disposal system (NLD) sumps (NLD-SUMP-00031/32). Only qualified effluent is transferred to the overhead sampling vessels. Effluent in the west process area sumps and the feed vessel area sumps is also characterized using sampling or process knowledge prior to transfer to the overhead sampling vessels. Each process batch is sampled in the concentrate vessels and characterized before it is sent to the LAW facility or to the Hanford tank farms. Similarly, each batch is sampled in the overhead sampling vessels and characterized before it is sent to the process condensate lag storage vessels. If the waste does not meet LERF/ETF requirements (i.e., off-specification), it can be blended in the other overhead sampling vessel in attempt to meet the LERF/ETF requirements. If required, the liquid effluent can be transferred to the evaporator feed vessel (DEP-VSL-00002).

The overhead sampling vessel transfer/recirculation pumps (DEP-PMP-00004A/B/C) are used to recirculate the overhead sampling vessels contents to a sample connection, where samples are collected and fluid is returned to the overhead sampling vessels through the eductors. After the content quality has

been verified through laboratory testing, pumps are used to transfer the contents to the process condensate lag storage vessels. In the event of an overflow, the liquid gravity drains to the low-point drain vessel (DEP-VSL-00001).

4G.2.5 Process Condensate Lag Storage Vessels (DEP-VSL-00005A/B)

The process condensate lag storage vessels (DEP-VSL-00005A/B) receive batches of process condensate from the overhead sampling vessels (DEP-VSL-00004A/B), secondary steam blowdown (SCW-VSL-00054) and effluent from the east process area sumps (DEP-SUMP-00003A/B) and the process condensate vessel area sumps (DEP-SUMP-00005A/B). The vessels allow for lag storage before sending the process condensate to the LERF/ETF. In the event of an overflow, the liquid will flow by gravity into the low-point drain vessel (DEP-VSL-00001). While sampling normally occurs in the overhead sampling vessels, the process condensate vessel can also be sampled prior to transfer to LERF/ETF.

Recirculation pumps are used to circulate fluid in the process condensate lag storage via eductors. The recirculation pumps are also used to flush the evaporator feed prefilter (DEP-FILT-00003), flush the low-point drank vessel transfer pumps, flush the pump suction lines of the three evaporator concentrate vessels, as well as dilute evaporator concentrate prior to transfer back to the Hanford Tank Farms. The condensate is added to the evaporator concentrate in a tee prior to the evaporator concentrate/feed vessel LAW effluent cooler (DEP-HX-00001). The flow ratios, based upon sampling before the transfer, are recorded and a sample is taken for post transfer confirmation to verify that the transfer meets the Hanford Tank Farms waste acceptance criteria. The effluent is then transferred to the Hanford Tank Farms.

4G.3 Miscellaneous Units

The following miscellaneous units are part of the DEP System and are managed under this permit as tanks and tank systems. Table 4G-2 Effluent Management Facility Miscellaneous Units (Systems and Sub-Systems) summarizes the miscellaneous units within the EMF.

4G.3.1 Evaporator Separator Vessel (DEP-EVAP-00001)

The evaporator separator vessel (DEP-EVAP-00001) receives feed from the evaporator feed vessel (DEP-VSL-00002) and circulates the contents through the evaporator reboiler (DEP-RBLR-00001). The stream from the evaporator reboiler is introduced below the liquid level and flashes to steam in the vacuum atmosphere at the liquid surface. The overhead vapors, consisting mainly of water, are processed to remove entrained liquid, with the overhead vapor continuing on to the evaporator primary condenser (DEP-COND-00001). The majority of the bottom liquid is recycled through the evaporator reboiler with a small amount sent to the evaporator concentrate vessels (DEP-VSL-00003A/B/C).

The evaporator separator vessel is equipped with nozzles in the vessel to spray process condensate on the demister pads and with an impingement plate tray to remove larger water droplets. The evaporator separator vessel also has a nozzle for injection of antifoam reagent. A circulation pump is used to transfer evaporator separator vessel contents to the evaporator reboiler. The evaporator reboiler adds heat to the contents to cause evaporation in the evaporator separator. Multiple transfer options are considered depending on the density, flow, and radiation of the concentrate; the effluent may be discharged to the evaporator concentrate vessels, recirculated back to the evaporator separator vessel, or if off-specification,

transferred to the evaporator feed vessel. In addition, a drain line is provided from the evaporator separator vessel to the low-point drain vessel (DEP-VSL-00001) to drain the evaporator during maintenance.

4G.3.2 Evaporator Primary Condenser (DEP-COND-00001)

The evaporator primary condenser (DEP-COND-00001) is the primary condenser for the evaporator separator vessel (DEP-EVAP-00001). The overhead vapors from the top of the evaporator separator vessel are condensed in the shell and tube condenser using a secondary cooling water loop. The condensate is pumped to the overhead sampling vessels (DEP-VSL-00004A/B) by evaporator condensate pumps (DEP-PMP-00006A/B), or sent back to the evaporator separator vessel as reflux. A portion of the condensate is also filtered via the condensate duplex cartridge filters (DEP-FILT-00004A/B) and used to spray the demister pads and for intermittent wash down of the evaporator separator vessel.

The vacuum for the evaporator separator vessel is established and maintained through condensing the vapor into liquid in the evaporator primary condenser. The first stage ejector (DEP-EJCTR-00001) is used for additional pressure control in the evaporator separator vessel.

4G.3.3 Evaporator Inter-Condenser (DEP-COND-00002)

Non-condensable overhead vapor is moved from the evaporator separator vessel (DEP-EVAP-00001) and evaporator primary condenser (DEP-COND-00001) via the first stage ejector and discharged to the evaporator inter-condenser (DEP-COND-00002). The evaporator inter-condenser and evaporator after-condenser (DEP-COND-00003) work with the steam ejectors to create a vacuum in the evaporator separator vessel.

4G.3.4 Evaporator After-Condenser (DEP-COND-00003)

The second stage ejector (DEP-EJCTR-00002) pulls vapor from evaporator inter-condenser (DEP-COND-00002) and discharges into the evaporator after-condenser (DEP-COND-00003), where the steam is condensed and the remaining vapor is drawn into the vessel vent header. The condensate from the condensers flows to a drain pot on the boot of the primary condenser, from there it is pumped by evaporator condensate pumps (DEP-PMP-00006A/B) to the overhead sampling vessels (DEP-VSL-00004A/B), and/or back to the evaporator separator vessel (DEP-EVAP-00001) to be used as continuous mesh-wash spray or intermittent wash-down, or sent back to the evaporator feed vessel as reflux.

4G.3.5 Process Condensate Filter (DEP-FILT-00002)

Prior to transfer to LERF/ETF, effluent is filtered through a 5-micron process condensate filter (DEP-FILT-00002) downstream of the process condensate lag storage transfer pumps (DEP-PMP-00005A/B).

4G.3.6 Evaporator Feed Prefilter (DEP-FILT-00003)

The evaporator feed prefilter (DEP-FILT-00003) is used to remove solids larger than 5 microns from the effluent entering the evaporator feed vessel (DEP-VSL-00002). It filters all effluent except for off-specification recycled condensate from overhead sampling vessels (DEP-VSL-00004A/B), contaminated secondary condensate from reboiler condensate collection vessel (DEP-VSL-00008), and off-specification concentrate from evaporator separator vessel (DEP-EVAP-00001). Filtered solids are flushed to the evaporator concentrate vessels (DEP-VSL-00003A/B/C), where the solids are mixed with the evaporator concentrate for transfer back to the LAW Vitrification Facility or filtered through the evaporator feed prefilter and sent the Hanford Tank Farms. Filtered solids do not enter the evaporator feed vessel.

4G.3.7 Condensate Duplex Cartridge Filters (DEP-FILT-00004A/B)

A portion of the condensate from the evaporator primary condenser (DEP-COND-00001) is also filtered via the condensate duplex cartridge filters (DEP-FILT-00004A/B) and used to spray off the demister pads or for intermittent wash down of the evaporator separator vessel (DEP-EVAP-00001).

4G.3.8 Evaporator Concentrate/Feed Vessels LAW Effluent Cooler (DEP-HX-00001)

The evaporator concentrate/feed vessels LAW effluent cooler (DEP-HX-00001) uses plant cooling water to cool the effluent stream prior to return to Hanford Tank Farms per the Tank Farm acceptance criteria; it is a plate and frame heat exchanger, where metal plates are used to transfer heat between the effluent and the plant cooling water. The effluent stream may be mixed with sodium nitrite and/or process condensate, as necessary.

4G.3.9 Evaporator Reboiler (DEP-RBLR-00001)

The evaporator reboiler **(**DEP-RBLR-00001) is a forced flow shell and tube reboiler that heats the high flow rate bottom stream from the evaporator separator vessel (DEP-EVAP-00001). The process fluid is on the tube side, with saturated steam on the shell side. The evaporator circulation pump (DEP-PMP-00017) is used to circulate evaporator separator vessel contents through the evaporator reboiler and back to the evaporator separator vessel. The heat input from the stream is adjusted depending on the temperature, level, and vaporization rate in the evaporator separator vessel. The evaporator reboiler has temperature and level sensing capabilities on the utility outlet piping, which interfaces with the Process Control System (PCJ) to remotely monitor temperature and level on the process fluid side. Also, the evaporator reboiler has conductivity sensing capability for the utility side of the reboiler, which interfaces with the PCJ to remotely monitor the evaporator reboiler for tube leaks. The reboiler condensate collection vessel (DEP-VSL-00008) manages clean steam condensate as part of a closed loop system. During normal operations, it does not handle dangerous waste or mixed waste.

4G.4 Secondary Containment and Release Detection for EMF

The EMF is constructed of steel reinforced concrete. The design ensures that the containment units have sufficient structural strength to prevent collapse or failure. The primary barriers of the EMF containment

units are designed to withstand loads from the movement of personnel, wastes, and equipment handling. Stainless steel liners are provided on the interior floors, and a portion of the walls, for the areas containing the low-point drain vessel (DEP-VSL-00001), the evaporator feed vessel (DEP-VSL-00002), and the evaporator concentrate vessels (DEP-VSL-00003A/B/C). The remaining containment areas are provided with special protective coatings that are constructed with chemical-resistant water stops and compatible with the stored waste.

The specifications for the preparation, design, and construction of the secondary containment systems are documented in Operating Unit Group 10, Appendix 13.7, and designed to applicable national codes and standards. Construction of tank systems to required specifications ensures that foundations are capable of supporting tank and secondary containment systems and that uneven settling and failures from pressure gradients will not occur.

Table 4G-3, Effluent Management Facility Secondary Containment Rooms/Areas and Table 4G-4, Effluent Management Facility Sumps, LDBs, Drain Lines and Floor Drains, summarizes the EMF secondary containment systems.

4G.4.1 Low-Point Drain Sump (DEP-SUMP-00001)

The low-point drain sump (DEP-SUMP-00001) is used to capture overflow effluent from the low-point drain vessel (DEP-VSL-00001). In addition, underground waste transfer line leak detection box drain headers discharge to the low-point drain sump. The low-point drain sump discharges to the evaporator feed vessel (DEP-VSL-00002). The liquid level in the low-point drain sump is monitored with transmitters that communicate with the PCJ and provide control room alarm indication.

4G.4.2 Pipeline Containment and Leak Detection

The DEP System has LDBs on the headers of the coaxial underground waste transfer piping. Leak detection boxes are provided for the underground transfer lines from LAWPS to LAW Vitrification Facility. Leak detection boxes are also provided on underground transfer lines between EMF and LAW Vitrification Facility, between EMF and Lab, between EMF and the Hanford Tank Farms, and between EMF and the LERF/ ETF. The WTP underground transfer line LDBs are located in the LAW effluent drain tank building (Room ED-B001) with the exception of the LERF/ ETF transfer line LDBs which are located at the interface point on the WTP property line. The LDBs are designed to detect a leak within the annular space of the coaxial piping. The liquid level in the sumps is monitored with transmitters that communicate with the PCJ and provide control room alarm indication.

Within EMF, the pipelines associated with the tank systems/miscellaneous units are primarily single-walled. Secondary containment is provided for piping within the plant through the use of special protective coatings and waterstops or stainless liners in process areas and process rooms. A short section of process piping is located in a pipe chase in Room ED-CH01, between the west process area and the low-point drain tank area, where coaxial piping is used. The leak detection equipment located within the process areas and process rooms sumps alert operators of a piping leak through the use of level detection instrument alarms. The west process area and the low-point drain area are connected by a pipe chase with coaxial piping that drains to the low-point drain sump (DEP-SUMP-00001).

For all secondary containment area sumps, residual liquids may be present after the sump has been flushed and pumped using the large transfer pump. When residual liquid is detected in sumps in readily

accessible areas, an entry will occur to remove the residual liquid using a portable sump pump or absorbent device. An exception to this process is in place for the feed vessel area sumps (DEP-SUMP-00004A/B) in room E-0105. These sumps include designated sample pumps (DEP-PMP-00042A/B) located in the EMF Sampling Fume Hood (DEP-HOOD-00001). The pumps are designed to support sampling of the sumps as well as the removal of small volumes of precipitation or residual liquids after the large transfer pump has completed the transfer.

The leak detection instrumentation for all secondary containment area sumps include a LKY function. The LKY function indicates an increase in fluid levels in the sump, even when residual liquid is present.

Design details for EMF Sumps, LDBs, drain lines and floor drains are included in Table 4G-4, and are shown on the process and instrumentation diagrams for DEP systems located in Operating Unit Group 10, Appendix 13.2.

4G.4.3 Evaporator Secondary Containment System

The secondary containment system and associated ancillary equipment for the evaporator separator vessel (DEP-EVAP-00001) is located in the area known as the west process area, located in the LAW effluent process building. The west process area sumps (DEP-SUMP-00002A/B) are located in Room E-0103. The west process area sumps and level detection instruments detect leakage from the evaporator separator vessel, evaporator feed prefilter (DEP-FILT-00003), and the additional ancillary equipment associated with the evaporator separator vessel. The west process area is sloped to the room sumps and is provided with a special protective coating and waterstops as part of secondary containment.

Fluid contained in the west process area sumps is transferred to the overhead sampling vessels (DEP-VSL-00004A/B) or the low-point drain vessel (DEP-VSL-00001) by sump pumps (DEP-PMP-00032A/B). The liquid level in the west process area sumps is monitored with transmitters that communicate with the PCJ and provide control room alarm indication.

4G.4.4 Evaporator Condenser Secondary Containment System

The secondary containment system for the evaporator condensers (DEP-COND-00001/2/3) and associated ancillary equipment is located in the area known as the east process area. The east process area sumps (DEP-SUMP-00003A/B) are located in Room E-0102. The east process area sumps and level detection instruments detect leakage from the evaporator condensers, the evaporator reboiler (DEP-RBLR-00001), the evaporator concentrate/feed vessels LAW effluent cooler (DEP-HX-00001), and the ancillary equipment associated with the evaporator condensers and evaporator reboiler. The east process area is sloped to the east process area sumps and is provided with a special protective coating and waterstops as part of secondary containment.

Fluid contained in the east process area sumps is transferred to the process condensate lag storage vessels (DEP-VSL-00005A/B) by sump pumps (DEP-PMP-00033A/B). The liquid level in sumps is monitored with transmitters that communicate with the PCJ and provide control room alarm indication.

4G.4.5 Process Condensate Vessel Area Sumps (DEP-SUMP-00005A/B)

The process condensate vessel area sumps (DEP-SUMP-00005A/B) are located in Room E-0106. The process condensate vessel area sumps are equipped with level detection instruments to detect precipitation or leakage from the overhead sampling vessels (DEP-VSL-00004A/B) and the process condensate lag storage vessels (DEP-VSL-00005A/B). The process condensate vessel area sumps also collect leakage from ancillary equipment located in this room. Room E-0106 is sloped to the sumps and is provided with a special protective coating and waterstops as part of secondary containment.

Fluid contained in the process condensate vessel area sumps is transferred to the process condensate lag storage vessels (DEP-VSL-00005A/B) by sump pumps (DEP-PMP-00035A/B). Room E-0106 is an easily accessible area, and sump liquid will be transferred to the lag storage vessels after an operator verifies that the source of the sump effluent did not originate in either of the lag storage vessels. When effluent is transferred from a sump to a vessel in a shared secondary containment area, the effluent will only be transferred to a non-leaking vessel.

If sampling verifies that the source of liquid in the overhead sampling vessel area sumps is precipitation, large volumes of precipitation can be transferred to the process condensate lag storage vessels (DEP-VSL-00005A/B) to be treated and disposed at the LERF/ETF. If small volumes of precipitation are accumulated, the liquid from the sumps can be manually transferred to a container and managed as non-dangerous waste. The effluent in the sumps will be removed within 24 hours or as practicable after receipt of the sample results.

A small volume of residual liquids may be present after the sump has been flushed and pumped using the large transfer pump. When residual liquid is detected in Room E-106 sumps, an entry will occur to remove the residual liquid using a portable pump or absorbent spill devices.

The liquid level in the sump is monitored and the sump is equipped with level transmitters that communicate with the PCJ and provide a control room alarm indication. The leak detection instrumentation for all secondary containment area sumps include a LKY function. The LKY function indicates an increase in fluid levels in the sump, even when residual liquid is present.

4G.4.6 Feed Vessel Area Sumps (DEP-SUMP-00004A/B)

The feed vessel area sumps (DEP-SUMP-00004A/B) are located in Room E-0105 and provide leak detection for the evaporator feed vessel (DEP-VSL-00002) and the evaporator concentrate vessels (DEP-VSL-00003A/B/C). The sumps also collect leakage from ancillary equipment or precipitation collected in Room E-0105. The room is sloped to the feed vessel area sumps. The secondary containment area located in the room is provided with a stainless steel liner. The liquid level in the feed vessel area sumps is monitored with transmitters that communicate with the process control system (PCJ) and provide control room alarm indication. Due to radiation dose rates there is limited access to Room E-0105.

If sampling verifies that source of liquid in the feed vessel area sumps is precipitation, large volumes of precipitation can be transferred to the overhead sampling vessels to be returned to the process. If small volumes of precipitation are accumulated, the liquid from the sample pumps (DEP-PMP-00042A/B) will be discharged to the DEP-HOOD-00001 drain that discharges to the low-point drain vessel (DEP-VSL-00001). Alternately, precipitation can be discharged to a container and managed as non-dangerous waste. The effluent in the sumps will be removed within 24 hours or as practicable after receipt of the sample results.

A small volume of residual liquids may be present after the sump has been flushed and pumped using the large transfer pump. When residual liquid is detected the sample pumps (DEP-PMP-00042A/B) can be used to remove the residual liquids after the large transfer pump has completed the transfer.

The leak detection instrumentation for all secondary containment area sumps include a LKY function. The LKY function indicates an increase in fluid levels in the sump, even when residual liquid is present. The feed vessel area sumps are equipped with pumps that transfer the liquid to the appropriate vessel; the liquid is transferred after sampling occurs to characterize the liquid. Precipitation collected in the feed vessel area sumps can be transferred by sump pumps (DEP-PMP-00034A/B) to the overhead sampling vessels (DEP-VSL-00004A/B). Effluent from a spill is transferred to the low-point drain vessel (DEP-VSL-00001) by sump pumps (DEP-PMP-00034A/B) and recycled back into the process.

4G.5 Air Emission Control

4G.5.1 Direct Feed LAW EMF Vessel Vent Process System (DVP)

The Direct Feed LAW EMF Vessel Vent Process System (DVP) is comprised of two main parts, air intake and exhaust. The DVP is designed to maintain hydrogen levels below dangerous levels and remove mixed waste particulates that may be present in the gases that fill the headspace of select DEP System process vessels. The DEP System process vessels and condenser that directly interface with the DVP are the low-point drain vessel (DEP-VSL-00001), evaporator feed vessel (DEP-VSL-00002), evaporator concentrate vessels (DEP-VSL-00003A/B/C), overhead sampling vessels (DEP-VSL-00004A/B), process condensate lag storage vessels (DEP-VSL-00005A/B) and the evaporator after condenser (DEP-COND-00003). The headspace in the evaporator separator vessel (DEP-EVAP-00001) is exhausted by the DVP through the evaporator condensers (DEP-COND-00001/2/3). The inlet air is taken from lower contamination areas throughout the building to provide purged air for maintaining the DEP System process vessels below the lower flammability limit for hydrogen.

The exhaust air is sent through a preheater (DVP-HTR-00001A/B), two-stages of HEPA filters (DVP-HEPA-00004A/B) and (DVP-HEPA-00003A/B), and an exhaust fan (DVP-EXHR-00001A/B), which discharges the air into the EMF stack downstream of the EMF Active Confinement Ventilation System (ACV) HEPA filters and exhaust fans. The exhaust fan is downstream of the DEP System process vessels, preheater and HEPA filters, to ensure that the DEP System vessel headspaces are at negative pressure. The tie-in point to the EMF stack is upstream of the stack monitoring systems, which monitor the exhaust air streams prior to discharge to the atmosphere.

4G.6 EMF Process Sampling

A liquid sampling station (DEP-HOOD-00001) is provided for the manual sampling of eight unique EMF process fluid streams, while maintaining the safety of the operator/worker. The sampling station consists of a standard fume hood, the low-point drain vessel (DEP-VSL-00001) process pipelines, manual sampling collection points, utilities systems and a drain system. The seven EMF process sample streams include samples from:

- DEP-VSL-00001
- DEP-VSL-00002
- DEP-VSL-00003A/B/C

- DEP-VSL-00004 A/B
- DEP-VSL-00005A/B
- DEP-EVAP-00001
- DEP-HX-00001

The fume hood functions to capture, confine, and exhaust fumes, vapors, and particulate matter produced or generated within the enclosure. The process pipelines provide primary containment for the radioactive process fluid to be sampled, and the hood is located within the east process area (Room E-0102).

Process pipelines bring the process fluids to the sampling station, recirculate the stream before the sample is collected to ensure the sample is representative for the batch, and provide the means to collect the sample into a sampling bottle. A system of valves is installed on the pipelines and used to control the flow during the sampling. The manual sampling collection points are individual points for each process vessel and are designed to hold and secure the sampling bottle during collection.

The utility systems are provided in the sampling station to allow for flushing and cleanup of the sampling lines at completion of the sampling campaign, and cleanup of the sampling station work area, whenever needed. The drain system collects the liquid waste resulting from the line flushing process and from the hood cleanup. The drain system connects the liquid sampling station and drains to the low-point drain vessel (DEP-VSL-00001).

Table 4G-1 Effluent Management Facility Tank Systems

No.	System	Vessel Number/Location	Description	Material	Approximate Total Volume (US Gallons)	Approximate Dimensions (Inside Diameter × Height or Length in feet) (tangent line/tangent line)
1	DEP	DEP-VSL-00001 ED-B001	Low-point drain vessel	Reserved	18,000	14 ft x 12.75 ft
2	DEP	DEP-VSL-00002 E-0105	Evaporator feed vessel	Reserved	42,300	14 ft x 32 ft
3	DEP	DEP-VSL-00003A E-0105	Evaporator concentrate vessel	Reserved	14,805	12 ft x 13.5 ft
4	DEP	DEP-VSL-00003B E-0105	Evaporator concentrate vessel	Reserved	14,805	12 ft x 13.5 ft
5	DEP	DEP-VSL-00003C E-0105	Evaporator concentrate vessel	Reserved	14,805	12 ft x 13.5 ft
6	DEP	DEP-VSL-00004A E-0106	Overhead sampling vessel	Reserved	40,800	14 ft x 30.75 ft
7	DEP	DEP-VSL-00004B E-0106	Overhead sampling vessel	Reserved	40,800	14 ft x 30.75 ft
8	DEP	DEP-VSL-00005A E-0106	Process condensate lag storage vessel	Reserved	127,260	25 ft x 29.5 ft
9	DEP	DEP-VSL-00005B E-0106	Process condensate lag storage vessel	Reserved	127,260	25 ft x 29.5 ft

Table 4G-2 Effluent Management Facility Miscellaneous Units (Systems and Sub-Systems)

No.	System/ Subsystem	Component Number/Location	Description	Material	Total Volume (US gallons)
Effluent Management Facility					

No.	System/ Subsystem	Component Number/Location	Description	Material	Total Volume (US gallons)
1	DEP	DEP-COND-00001 E-0102	DEP Evaporator Primary Condenser	Reserved	NA
2	DEP	DEP-COND-00002 E-0102	DEP Evaporator Inter-Condenser	Reserved	NA
3	DEP	DEP-COND-00003 E-0102	DEP Evaporator After-Condenser	Reserved	NA
4	DEP	DEP-EVAP-00001 E-0103	DEP Evaporator Separator Vessel	Reserved	NA
5	DEP	DEP-FILT-00002 E-0103	DEP Process Condensate Filter	Reserved	NA
6	DEP	DEP-FILT-00003 E-0103	DEP Evaporator Feed Prefilter	Reserved	NA
7	DEP	DEP-FILT-00004A E-0102	DEP Condensate Duplex Cartridge Filter	Reserved	NA
8	DEP	DEP-FILT-00004B E-0102	DEP Condensate Duplex Cartridge Filter	Reserved	NA
9	DVP	DVP-HTR-00001A E-0102	Process Ventilation Preheater	Reserved	NA
10	DVP	DVP-HTR-00001B E-0102	Process Ventilation Preheater	Reserved	NA
11	DVP	DVP-HEPA-00003A E-0102A	Process Ventilation Primary HEPA Filter	Reserved	NA
12	DVP	DVP-HEPA-00003B E-0102A	Process Ventilation Primary HEPA Filters	Reserved	NA
13	DVP	DVP-HEPA-00004A E-0102A	Process Ventilation Secondary HEPA Filters	Reserved	NA
14	DVP	DVP-HEPA-00004B E-0102A	Process Ventilation Secondary HEPA Filters	Reserved	NA
15	DEP	DEP-HX-00001 E-0103	Evaporator Concentrate/Feed Vessels LAW Effluent Cooler	Reserved	NA
16	DEP	DEP-RBLR-00001 E-0103	DEP Evaporator Reboiler	Reserved	NA
17	DVP	DVP-EXHR-00001A E-0102	Process Ventilation Exhausters	Reserved	NA

No.	System/ Subsystem	Component Number/Location	Description	Material	Total Volume (US gallons)
18	DVP	DVP-EXHR-00001B E-0102	Process Ventilation Exhausters	Reserved	NA

Table 4G-3 Effluent Management Facility Secondary Containment Rooms/Areas

Room/Area	Approximate Room/Area Dimensions (L×W, in feet)	Miscellaneous Treatment Units or Tanks in Room/Area (Largest Plant Item)	Volume of Largest Plant Item in Room/Area (US Gallons)	Minimum Secondary Containment Height (feet)
E-0102 east evaporator process area	62 ft x 94 ft 6 in.	Process condensate lag storage vessel	127,260	4 ft 6 in.
E-0103 west evaporator process area	62 ft x 56 ft 6 in.	Evaporator feed vessel	42,300	3 ft 5 in.
ED-B001 low-point drain vessel area	28 ft x 33 ft	Low-point drain vessel	18,000	4 ft 2 in.
E-0105-evaporator feed vessel area	45 ft 6 in. x 39 ft	Evaporator feed vessel	42,300	5 ft 2 in.
E-0106 process condensate lag storage vessel area	45 ft6 in. x 84 ft 4 in.	Process condensate lag storage vessel	127,260	6 ft 10 in.

Table 4G-4 Effluent Management Facility Sumps, Leak Detection Boxes, Drain Lines/ Floor Drains

Sump/Leak Detection Box, or Floor Drain/Line I.D.# and Room#	Maximum Sump/Leak Detection Box Capacity (gallons)	Sump/Leak Detection Box Level Detection Type	Sump, Leak Detection Box or Floor Drain/Line Dimensions (approximate) and Materials of Construction	Piping and Instrumentation Diagram Number
Effluent Management Facility				
Sumps				
DEP-SUMP-00001 ED-B001	~58	Radio Frequency (RF) Capacitance	24 in. Dia. x 30 in. Length 304L SS	**24590-BOF** -M6-DEP-00001002
DEP-SUMP-00002A E-0103	~58	RF Capacitance	24 in. Dia. x 30 in. Length 304L SS	**24590-BOF** -M6-DEP-00009001

DEP-SUMP-00002B E-0103	~58	RF Capacitance	24 in. Dia. x 30 in. Length 304L SS	**24590-BOF** -M6-DEP-00009001
DEP-SUMP-00003A E-0102	~58	RF Capacitance	24 in. Dia. x 30 in. Length 304L SS	**24590-BOF** -M6-DEP-00009004
DEP-SUMP-00003B E-0102	~58	RF Capacitance	24 in. Dia. x 30 in. Length 304L SS	**24590-BOF** -M6-DEP-00009004
DEP-SUMP-00004A E-0105	~58	RF Capacitance	24 in. Dia. x 30 in. Length 304L SS	**24590-BOF** -M6-DEP-00009002
DEP-SUMP-00004B E-0105	~58	RF Capacitance	24 in. Dia. x 30 in. Length 304L SS	**24590-BOF** -M6-DEP-00009002
DEP-SUMP-00005A E-0106	~58	RF Capacitance	24 in. Dia. x 30 in. Length 304L SS	**24590-BOF** -M6-DEP-00009005
DEP-SUMP-00005B E-0106	~58	RF Capacitance	24 in. Dia. x 30 in. Length 304L SS	**24590-BOF** -M6-DEP-00009005
Leak Detection Boxes				
DEP-LDB-00001 ED-B001	~7	Conductivity Switch	8 in. Dia. x 41 in. Length 316L SS	**24590-BOF** -M6-DEP-00011001
DEP-LDB-00002 ED-B001	~7	Conductivity Switch	8 in. Dia. x 41 in. Length 316L SS	**24590-BOF** -M6-DEP-00011001
DEP-LDB-00003 ED-B001	~7	Conductivity Switch	8 in. Dia. x 41 in. Length 316L SS	**24590-BOF** -M6-DEP-00011001
DEP-LDB-00004 ED-B001	~7	Conductivity Switch	8 in. Dia. x 41 in. Length 316L SS	**24590-BOF** -M6-DEP-00011001
DEP-LDB-00005 ED-B001	~7	Conductivity Switch	8 in. Dia. x 41 in. Length 316L SS	**24590-BOF** -M6-DEP-00011001
DEP-LDB-00006 ED-B001	~7	Conductivity Switch	8 in. Dia. x 41 in. Length 316L SS	**24590-BOF** -M6-DEP-00011001

Drain Lines					
BOF-DEP-ZS-20282-W11A-011/02-01 ED-CH01	NA	NA	4 in. Dia. 316L SS	Containment pipe	**24590-BOF** -M6-DEP-00001001
			1 ½ in. Dia. AL6XN	Process pipe	
BOF-DEP-ZS-20236-W31A-02-01 ED-CH01	NA	NA	4 in. Dia. Carbon Steel	Containment pipe	**24590-BOF** -M6-DEP-00001001
			2 in. Dia. 316L SS	Process pipe	
BOF-DEP-ZS-20245 -W11A-04-01ED-CH01	NA	NA	6 in. Dia. 3166 SS	Containment pipe	**24590-BOF** -M6-DEP-00001001
			4 in. Dia. AL6XN	Process pipe	
BOF-DEP-ZS-20231-W31A-03-01 ED-CH01	NA	NA	6 in. Dia. Carbon Steel	Containment pipe	**24590-BOF** -M6-DEP-00001001
			3 in. Dia. 316L SS	Process pipe	
BOF-DEP-ZS-20242-W31A-10-01 ED-CH01	NA	NA	14 in. Dia. Carbon Steel	Containment pipe	**24590-BOF** -M6-DEP-00001001
			10 in. Dia. 316L SS	Process pipe	
BOF-DEP-ZS-20249-W31A-03-01 ED-CH01	NA	NA	6 in. Dia. Carbon Steel	Containment pipe	**24590-BOF** -M6-DEP-00001001
			3 in. Dia. 316L SS	Process pipe	
BOF-DEP-ZS-20225-W31A-02-01 ED-CH01	NA	NA	4 in. Dia. Carbon steel	Containment pipe	**24590-BOF** -M6-DEP-00001002
			2 in. Dia. 316L SS	Process pipe	
BOF-DEP-ZS-20219-W31A-02-01	NA	NA	4 in. Dia. Carbon steel	Containment pipe	**24590-BOF** -M6-DEP-00001002
			2 in. Dia.	Process	

ED-CH01			316L SS	pipe	
BOF-DEP-ZS-20222-W31A-02-01 ED-CH01	NA	NA	4 in. Dia. Carbon Steel	Containment pipe	**24590-BOF** -M6-DEP-00001002
			2 in. Dia 316L SS.	Process pipe	
BOF-DEP-ZS-20252-W11A-03-01 ED-CH01	NA	NA	6 in. Dia. 316L SS	Containment pipe	**24590-BOF** -M6-DEP-00010001
			3 in. Dia. AL6XN	Process pipe	
BOF-DEP-ZS-20265-W31A-03-01 ED-CH01	NA	NA	6 in. Dia. Carbon Steel	Containment Pipe	**24590-BOF** -M6-DEP-00002006
			3 in. Dia. 316L SS	Process pipe	
BOF-DEP-ZY-00181-W31A-03-01 ED-CH01	NA	NA	6 in. Dia. Carbon Steel	Containment Pipe	**24590-BOF** -M6-DEP-00001001
			3 in. Dia. 316L SS	Process pipe	
BOF-DEP-WU-00008-W31A-03-01 ED-CH01	NA	NA	6 in. Dia. Carbon steel	Containment pipe	**24590-BOF** -M6-DEP-00001001
			3 in. Dia. 316L SS	Process pipe	
BOF-DVP-GV-00026-W31A-03-01 ED-CH01	NA	NA	6 in. Dia. Carbon steel	Containment Pipe	**24590-BOF** -M6-DEP-00001001
			3 in. Dia. 316L SS	Process pipe	

Figure 4G-1 Effluent Management Facility Process Flow

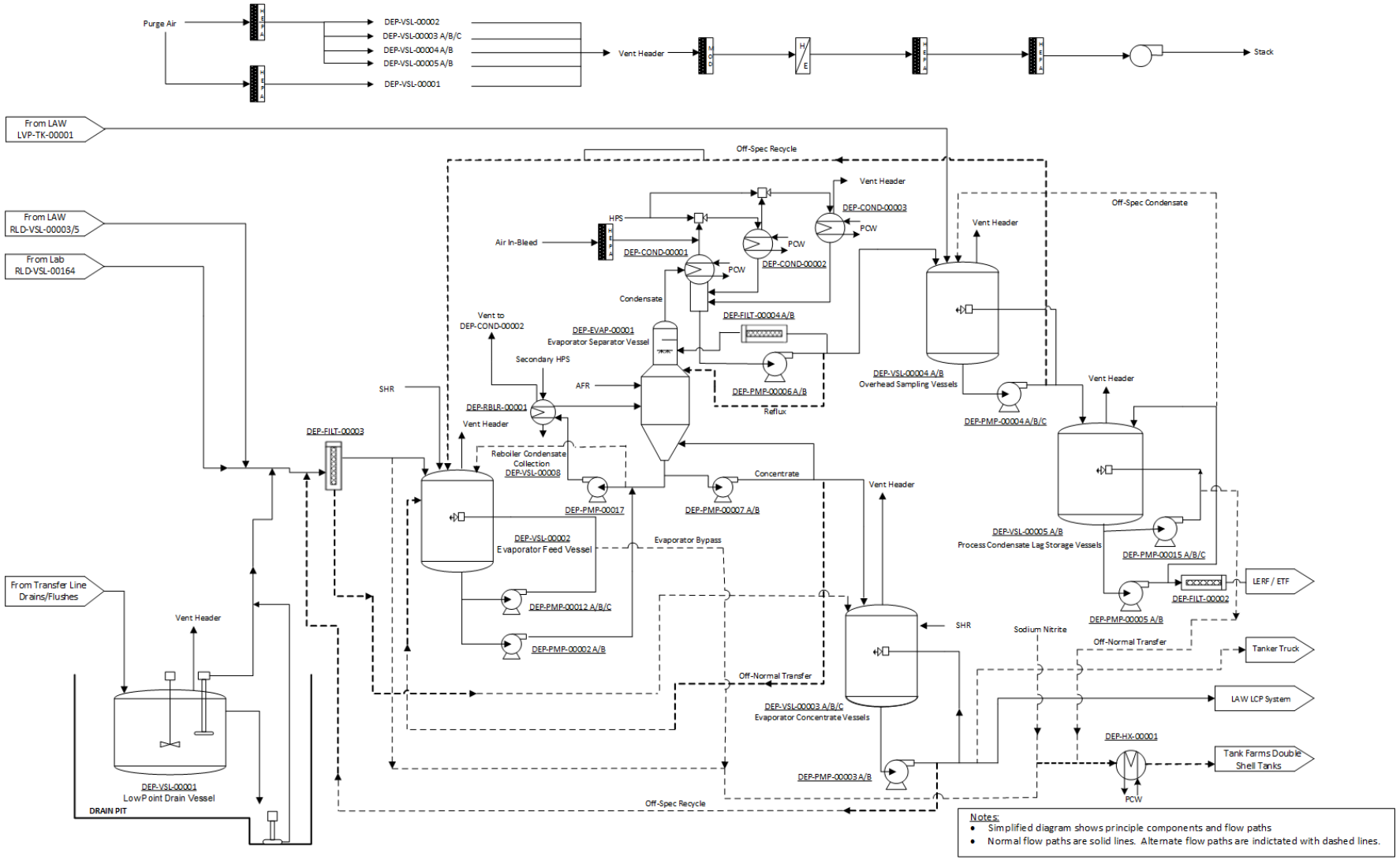

APPENDIX 4H
ANALYTICAL LABORATORY (LAB)

This page intentionally left blank.

APPENDIX 4H
ANALYTICAL LABORATORY (LAB)

TABLE OF CONTENTS

4H ANALYTICAL LABORATORY (LAB) 1
4H.1 Containers 9
4H.1.1 Description of Containers 9
4H.1.2 Container Management Practices 10
4H.1.2.1 Miscellaneous Mixed Waste and Miscellaneous Nonradioactive Dangerous Waste Containers 10
4H.1.2.2 Waste Tracking 10
4H.1.3 Container Labeling 11
4H.1.4 Containment Requirements for Storing Waste 11
4H.1.4.1 Secondary Containment System Design 12
4H.1.4.2 System Design 12
4H.1.4.3 Structural Integrity of the Base 13
4H.1.4.4 Containment System Capacity 13
4H.1.4.5 Control of Run-On 14
4H.1.4.6 Removal of Liquids from Containment System 14
4H.1.4.7 Demonstration that Containment is not Required because Containers do not Contain Free Liquids, Wastes that Exhibit Ignitability or Reactivity, or Wastes Designated F020-023, F026 or F027 14
4H.1.5 Prevention of Reaction of Ignitable, Reactive, and Incompatible Wastes in Containers 14
4H.2 Tank Systems 15
4H.2.1 Radioactive Liquid Waste Disposal (RLD) System 15
4H.2.2 Autosampling System (ASX) 16
4H.2.2.1 Autosampler Secondary Containment and Leak Detection Functions 17
4H.3 Air Emission Control 18
4H.4 Laboratory Maintenance 19
4H.5 Solid Waste Management 19
4H.5.1 Hotcell Solid Waste Management 20
4H.5.2 Container Storage Area for the Analytical Laboratory 20

TABLES

Table 4H-1 Analytical Laboratory Tank Systems 21
Table 4H-2 Analytical Laboratory Tank Systems Secondary Containment Areas 22
Table 4H-3 Analytical Laboratory Sumps, Leak Detection Boxes, and Floor Drains/Lines 23
Table 4H-4 Analytical Laboratory Container Storage Areas 25

This page intentionally left blank.

4H Analytical Laboratory (Lab)

The Analytical Laboratory (Lab) is designed to incorporate the features and capability necessary to ensure efficient Hanford Tank Waste Treatment and Immobilization Plant (WTP) operations and meet permitting, process control, authorization basis, and waste form qualification requirements. The Lab is designed for "24/7" - 365 days per year operation to support peak throughput for each WTP facility. The Lab is a process support facility. The Resource Conservation and Recovery Act (RCRA) permitted portion of the Lab include the Radioactive Liquid Waste Disposal (RLD) tank system (tank and ancillary equipment) and the container storage areas. The Lab will also include satellite accumulation areas for the accumulation of secondary wastes generated by laboratory activities. Barcode readers and computer workstations are provided in designated areas to input and retrieve data from the LIMS.

The workstations will be logically segregated to provide a degree of isolation from possible cross contamination that could reduce the validity of the analytical results. This isolation will be a design consideration. Isolation is also provided to enhance the ability of the laboratory to function even when a room or workstation is nonfunctioning. Redundant capabilities will be provided, as appropriate, to mitigate contamination incidents to maintain required support to the processes when one system fails.

~~A sample~~Samples prepared ~~in either~~within the Analytical ~~Hotcell~~ Laboratory ~~(AHL) or Analytical Radiological Laboratory (ARL)~~ may be ~~delivered~~sent to ~~an~~ off-site ~~facility.~~facilities for analysis. The sample ~~is~~(s) are packaged according to the dose rate and destination in "strong tight containers" or shielded shipping containers. The day the shipment is scheduled to be made, the packaged sample will be surveyed for final radiological release, shipping papers including chain-of-custody forms will be verified for completion, and transferred with the shipment package.

The laboratory design will be validated with information from tank utilization modeling of the process tanks and operational research modeling of the treatment process, as appropriate. General arrangement drawings 24590-LAB-P1-60-00007 and -00008 in ~~DWP~~Dangerous Waste Permit (DWP) Operating Group 10, Appendix 11.4 provide a general layout of the 0'-0" and -19'-2" elevations of the Lab where analytical, maintenance, administrative, and waste management activities take place. The following attributes are outlined in the facility design figures described above:

- Workstations have been defined as required by the sampling and analysis plan for WTP process control and waste form qualification.
- Capability to provide limited process technology will be provided.
- Contamination controls have been incorporated for reliability of laboratory service to the WTP processes.
- Management of samples for off-site analysis by an outsource laboratory including feed receipt samples.

Drawings and other documents, found in DWP Operating Group10, Appendix 11.0 provide additional detail for the Lab:

- General arrangement drawings showing locations of tank systems, secondary waste management and analytical laboratory activities.
- Process flow diagrams for process information.
- Piping and instrumentation diagrams (P&IDs), mechanical drawings, typical system figures depicting the analytical laboratory tank system and ancillary equipment.

The Lab contains both high-activity and low-activity laboratories. High-activity samples will be managed in the analytical hotcell laboratory (AHL~~.~~). Low-activity samples will be managed and analyzed in the

analytical radiological laboratory (ARL~~, also known as the Rad Labs.~~). The ARL also includes a sample receiving/shipping area designed to manage the inflow of manually transported samples.

The AHL will operate in the Baseline configuration. Associated hotcell laboratories, tank systems, and ventilation systems, will be isolated in the Direct Feed LAW (DFLAW) configuration, and will not operate until Pretreatment operations begin.

The facility is also being designed to coordinate the management of samples that will be outsourced and analyzed at off-site laboratories. Outsource laboratories will be used to analyze the majority of very low-activity samples such as water quality and air emission samples. Outsource laboratories will also be used to analyze double shell tank (DST) system unit characterization samples. Analytical methods and equipment selected to support laboratory analyses will be in accordance with applicable requirements. A laboratory information management system (LIMS) network is provided to track and maintain an inventory of samples, reagents, and materials in the Lab area including sample analyses and data collection. In addition, the Lab includes waste drum management, maintenance, and support areas for facility operation.

The second floor of the Lab will be dedicated to the mechanical room, which will contain the C1 and C2 air handling units.

The RLD system vessels are located at approximately 19 ft below grade. Table 4H-1 lists current tank design information (capacity, materials of construction, and dimensions). Tank systems that manage liquid mixed or dangerous waste are provided with secondary containments. Table 4H-2 summarizes the secondary containment rooms/areas and calculated minimum liner heights. Sumps, leak detection boxes, and secondary containment drain systems are listed in Table 4H-3.

Samples will be transported to the Lab in two ways. The majority of samples will be collected and transported from the processing facilities via the autosampling system (ASX)~~. system~~ Samples will be collected in a sample bottle or vial and transferred into a sample carrier. High-activity samples from the Pretreatment Facility (PTF) and High-Level Waste (HLW) vitrification facility will be pneumatically transferred to the hotcell sample receipt area through a dedicated transfer system for high-activity samples. Low-activity samples from the Low-Activity Waste (LAW) vitrification facility will be transferred directly to the sample receipt laboratory area through a dedicated low-activity transfer system. ~~A~~Effluent management Facility (EMF) samples and a small percentage of samples from other facilities will be transported to the laboratory manually in appropriately shielded transportation casks or containers.

General Description of the Analytical Radiological Laboratory (ARL)

The ARL is one of the two analytical areas contained within the Lab. The ARL ~~will consist~~consists of thirteen laboratories commonly referred to as Rad Labs~~.~~ and is designed to operate during both the Baseline and DFLAW configurations. The other area is the AHL. The AHL will only operate in the Baseline configuration

Laboratory areas manage dangerous and/or mixed waste in Satellite Accumulation Areas (SAAs) and 90-Day Accumulation Areas pursuant to the generator requirements [WAC 173-303-200]. Organic liquids will be segregated and managed as Lab Packs; other liquid wastes will be transferred to RLD Vessels to be returned back into the WTP process.

The ~~Rad Labs (designation RL) are~~ARL is designed to support the preparation and analysis of low-activity mixed waste samples. The ~~Rad~~ Labs also support the analyses of samples diluted, digested, and prepared in the hotcell facility. Samples will be manually transferred from the hotcell facility to the ~~Rad Labs~~ARL. The ~~Rad Labs~~ARL will be capable of receiving these low-activity samples transferred from the process facilities via the ASX ~~system~~as well as manually transported low-activity samples from the process facilities. Equipment used in the preparation of samples for analyses will be located inside the fume hoods vented to the C3 ventilation system. All analyses except counting will be completed with

equipment located in ventilation hoods. Barcode readers and computer workstations are provided in designated areas to input and retrieve data from the LIMS.

The ~~Rad Labs include~~ARL includes utilities and equipment required to support activities such as:

- Sample receipt and (manual) transport
- Dissolution/dilution
- Distillation/titration
- Standard/reagent preparation
- X-ray fluorescence spectrometry (XRF)
- Fourier transformation infrared spectrometry (FT-IR)
- Total Inorganic Carbon/Total Organic Carbon analyses (TIC/TOC)
- Analyses of elements and anions
- Ultraviolet and visible spectroscopy
- Preparation of samples for elemental analysis
- General physical properties analysis
- Radionuclide separation and counting
- Management of outsourced samples
- Satellite accumulation areas for secondary wastes

Sample Receipt Laboratory (RL-1)

The Sample Receipt Laboratory will serve as the sample receipt and staging area for the ARL. This laboratory will be provided with hoods for sample receipt, inspection/evaluation, sample staging and transfers. RL-1 will also contain four shielded cabinets each ventilated to the C3V system, and refrigerators for storage of samples requiring sample preservation. Sample preparations are completed with equipment located in hoods vented to the C3 ventilation system. ~~Satellite Accumulation Area(s) (SAAs) will be available in the laboratory to accumulate solid wastes generated during the sample receipt, evaluation, and dispatch. Organic liquids will be segregated and managed as Lab Packs; other liquid wastes will be disposed in the Rad Lab sink drains (RLD system) and recycled back into the WTP process.~~

Dissolution/Dilution Lab (RL-2)

The Dissolution/Dilution Lab supports general wet chemistry activities including the preparation of samples for analyses that will be performed in the other Rad Labs. RL-2 will house instrumentation and supplies to support a variety of sample preparation techniques. The two primary sample preparation methods to be performed in RL-2 are microwave-assisted acid dissolution and fusion dissolution. Sample preparations are completed with equipment located in hoods vented to the C3 ventilation system. ~~SAA(s) will be available in the laboratory to accumulate solid wastes generated during the sample preparation and analyses. Organic liquids will be segregated and managed as Lab Packs; other liquid wastes will be disposed in the Rad Lab sink drains (RLD system) and recycled back into the WTP process.~~

Distillation/Titration Lab (RL-3)

The Distillation/Titration Lab provides sample preparation including distillation, titration, and physical measurements of samples. Sample preparation performed in this laboratory involves determining the

aliquot or sub-sample weight, measurement of the specific gravity/density of sample solutions, and acid and base titrations. Sample preparations are completed with equipment located in hoods vented to the C3 ventilation system. ~~SAA(s) will be available in the laboratory to accumulate solid wastes generated during the sample preparation and analyses. Organic liquids will be segregated and managed as Lab Packs; other liquid wastes will be disposed in the Rad Lab sink drains (RLD system) and recycled back into the WTP process.~~

Standard/Reagent Preparation Laboratory (RL-4)

The Standard/Reagent Preparation Laboratory provides for prepared standards and reagents prior to their distribution to the other laboratories. Sources used for infrequent calibration of counting equipment will be stored in this laboratory. Sample preparations are completed with equipment located in hoods vented to the C3 ventilation system. ~~SAA(s) will be available in the laboratory to accumulate solid wastes generated during the sample preparation and analyses. Organic liquids will be segregated and managed as Lab Packs; other liquid wastes will be disposed in the Rad Lab sink drains (RLD system) and recycled back into the WTP process.~~

X-ray Laboratory (RL-5)

The X-ray Laboratory is used for quantifying elemental concentrations utilizing the X-ray Fluorescence (XRF) system. Optical microscopes are used for qualitatively identifying crystals as needed during process troubleshooting. Analyses are completed with equipment located in hoods vented to the C3 ventilation system. ~~SAA(s) will be available in the laboratory to accumulate solid wastes generated during the sample preparation and analyses. Organic liquids will be segregated and managed as Lab Packs; other liquid wastes will be disposed in the Rad Lab sink drains (RLD system) and recycled back into the WTP process.~~

Instrument Laboratory (RL-6)

The Instrument Laboratory supports unique functions associated with non-routine analyses. These functions include sample preparation and analysis functions such as the preparation of KBr pellets, preparation of dilutions and reagents for UV/VIS spectrophotometry, FT-IR Spectrometry for the quantitation of compounds in liquid, gas, or solid phases, and UV/VIS spectrometry for quantitation of compounds in liquids. Analyses and sample preparations are completed with equipment located in hoods vented to the C3 ventilation system. ~~SAA(s) will be available in the laboratory to accumulate solid wastes generated during the sample preparation and analyses. Organic liquids will be segregated and managed as Lab Packs; other liquid wastes will be disposed in the Rad Lab sink drains (RLD system) and recycled back into the WTP process~~.

Process Technology Laboratory (RL-7)

The Process Technology Laboratory provides non-routine measurement of physical characteristics of low-activity process samples and process tests. This laboratory is used for differential scanning calorimeter/thermal gravimetric analysis (DSC/TGA), particle size analysis, and rheology and pH measurements. Analysis and testing are completed with equipment located in hoods vented to the C3 ventilation system. ~~SAA(s) will be available in the laboratory to accumulate solid wastes generated during the sample preparation and analyses. Organic liquids will be segregated and managed as Lab Packs; other liquid wastes will be disposed in the Rad Lab sink drains (RLD system) and recycled back into the WTP process.~~

Process Technology Laboratory (RL-8)

The Process Technology Laboratory provides testing on laboratory scale equipment to observe the behavior of low-activity materials during processing through a process unit operation and to define anomalies to routine processing. All analyses are completed with equipment located in hoods vented to the C3 ventilation system. ~~SAA(s) will be available in the laboratory to accumulate solid wastes~~

~~generated during the sample preparation and analyses. Organic liquids will be segregated and managed as Lab Packs; other liquid wastes will be disposed in the Rad Lab sink drains (RLD system) and recycled back into the WTP process.~~

Elemental Analysis Laboratories (RL-9 and RL-9A)

The Elemental Analysis Laboratories are used for the preparation and analysis of medium level radioactive samples using an inductively coupled plasma/atomic emission spectrometer (ICP/AES) instrument for the analysis of elements, inductively coupled plasma/mass spectrometer (ICP/MS) instrument for the analysis of elements and specific radionuclides, and mercury analyzer for the analysis of mercury. The Elemental Analysis Laboratory RL-9A is a duplicate of Elemental Analysis Laboratory RL-9; RL-9A is a backup to RL-9. The space is available for the setup of process development evaluations. ~~SAA(s) will be available in the laboratories to accumulate solid wastes generated during the sample preparation and analyses. Organic liquids will be segregated and managed as Lab Packs; other liquid wastes will be disposed in the Rad Lab sink drains (RLD system) and recycled back into the WTP process~~All analyses are completed with equipment located in hoods vented to the C3 ventilation system.

General Chemistry Lab (RL-10)

The General Chemistry Lab is used to prepare and analyze samples using the Ion Chromatography (IC) for analysis of selected anions and organic acids, and the Total Carbon analyzer ~~(TC)~~ for total inorganic carbon, and total organic carbon (TIC/TOC) analysis. RL-10 equipment is split such that instrument electronics are on benches adjacent to fume hoods and the components for sample contact are inside hoods vented to the C3 ventilation system. ~~SAA(s) will be available in the laboratory to accumulate solid wastes generated during the sample preparation and analyses. Organic liquids will be segregated and managed as Lab Packs; other liquid wastes will be disposed in the Rad Lab sink drains (RLD system) and recycled back into the WTP process.~~

Rad Preparation Laboratories (RL-11 and RL-12)

The Rad Preparation Laboratories are used for sample preparation and separation of various radionuclides for analysis by nuclear spectroscopy (counting). Both of the laboratories will be identical in size and will have the capability to provide limited redundancy or both labs can be used to provide additional capacity. ~~SAA(s) will be available in the laboratories to accumulate solid wastes generated during the sample preparation and analyses. Organic liquids will be segregated and managed as Lab Packs; other liquid wastes will be disposed in the Rad Lab sink drains (RLD system) and recycled back into the WTP process~~All analyses are completed with equipment located in hoods vented to the C3 ventilation system.

Rad Counting Laboratory (RL-13)

The Rad Counting Laboratory is used for analyzing prepared samples, standards, and control sources. This laboratory will accommodate instrumentation for measurements of alpha, beta, and gamma radiation in samples transferred from the Rad Preparation Laboratories RL-11 and RL-12. There will be no hoods, water distribution, or sinks in this room. Samples will be manually transported on a cart from the Rad Preparation Laboratories. Shielded storage areas will be provided for temporary staging of samples, calibration and control check sources. Analyses will be completed using gamma spectrometer systems, gas-flow proportional counters for gross alpha/beta analysis, alpha spectroscopy multi-detector systems, and liquid scintillation counting systems for beta analysis. ~~SAA(s) will be available in the room to accumulate solid waste generated during the receiving and packaging operations~~.

Sample Shipping and Receiving Area (Rm A-0141F)

The Sample Shipping and Receiving Area is located adjacent to the primary airlock and is used for receiving manually delivered samples. This room will provide space for loading casks for off-site transport of samples as required. This room will also provide an area with low contamination potential and reduces the need for decontamination of casks and containers for off-site radiological release. This

area provides equipment to receive and transfer samples, chain of custody, staging for shipment to off-site facilities, and transfer to RL-1 or into the Sample Receipt Hotcell (HC-1) if the radioactivity level is determined to require shielding. A fume hood is provided to support sample receipt, packaging, and preparation for shipment.

If the sample is to be shipped to another facility, the sample will be placed on shelving or in the refrigerator awaiting shipping. If a sample originating in the Lab is to be shipped to another laboratory, the exterior of the sample container will be decontaminated and brought to this location for staging for shipment. ~~SAA(s) will be available in the room to accumulate solid waste generated during the receiving and packaging operations. Organic liquids will be segregated and managed as Lab Packs; other liquid wastes will be disposed in the Rad Lab sink drains (RLD system) and recycled back into the WTP process.~~

General Description of the Analytical Hotcell Laboratory (AHL)

~~Process~~In the Baseline configuration process samples from the WTP PTF and HLW facility taken by the ASX ~~system~~ are delivered to the Hotcell Receipt Station (HCRS) by a pneumatic transfer system. Samples from outside the WTP that require shielding are delivered to the hotcell in shielded sample carriers called pigs. Barcode readers are provided in each hotcell and a computer workstation is provided to input and retrieve data from the LIMS. A trolley is provided for inter-cell transfers of samples and smaller equipment items. A monorail is provided to move large equipment. Each hotcell is provided with an appropriate number of master slave manipulators (MSMs) to accomplish in-cell tasks remotely. The equipment used to perform the functions described in the following sections is representative of typical activities for safely performing operations on highly radioactive samples.

The AHL consists of 14 hotcells (HC), one hood assembly, and three glovebox assemblies adjoining the hotcell structure. The facility includes equipment in Hotcells 1 through 14 with the Hotcell 14 functioning as the secondary waste management area, and a more detailed description of Hotcell 14 waste management activities is provided in ~~Appendix~~Section 4H.~~5~~4, Solid Waste Management. Gloveboxes adjoining HC-12 and HC-13 will house the ICP/AES and ICP/MS instruments.

Samples will be moved into and between the hotcells using the trolley or monorail. Ventilation flow from the ~~hotcell~~hotcell area, including the waste cell, will be routed to the C5 HEPA filtration system.

Sample Receipt (HC-1)

The Sample Receipt Hotcell is located at the north end of the series of analytical hotcells. One glovebox assembly on HC-1 will be used to transfer samples and material out of the hotcells. One hood assembly on HC-1 will be used to introduce manually drawn samples into HC-1. This hotcell is outfitted with four MSM arms (two pairs) on the east and west sides to provide full floor coverage. The HCRS on top of HC-1 provides for the delivery of samples from the ASX ~~system~~. The mechanical de-capping of sample bottles, transferring samples to transparent container, and capping with a screw-type lid is performed in HC-1. HC-1 also provides radiation dose rate probe and meter to estimate the radiation level of both incoming and outgoing samples, pH meter for measurement of samples, and a barcode reader (or similar device) to identify and track sample containers.

The ASX HCRS is located on top of HC-1. The sample carrier will be delivered from an HLW or PTF ASX sampler to the HCRS. The HCRS will remove the sample bottle from the carrier utilizing robotics and place it in a chute attached to HC-1. ~~SAA(s) will be available in the hotcell to accumulate solid wastes generated during the sample preparation and analyses. Organic liquids will be segregated and managed as Lab Packs; other liquid wastes will be disposed in the hotcell floor drain (RLD system) and recycled back into the WTP process.~~

Sample Preparation (HC-2 and HC-3)

The Sample Preparation Hotcells are located south of the sample receiving hotcell and each hotcell will be outfitted with two MSMs. Activities carried out in these hotcells include the generation of individual sample aliquots using sample homogenizer, electronic scales, centrifuge, filtration, stirring, and desiccators. Individual sample aliquots are then transferred to other hotcells for further analysis. ~~SAA(s) will be available in the hotcell to accumulate solid wastes generated during the sample preparation and analyses. Organic liquids will be segregated and managed as Lab Packs; other liquid wastes will be disposed in the hotcell floor drain (RLD system) and recycled back into the WTP process.~~

Limited Process Technology (HC-4)

The limited process technology hotcell provides space for the evaluation of anomalies occurring in the processing facilities such as potential plugging of ultrafilters, ion exchange malfunction and material foaming, etc. This hotcell may also be used to prepare coupons for analyses in hotcells 12 and 13. This cell has one pair of MSMs and necessary sample preparation equipment (furnaces, drying ovens, balances, etc.) to complete process testing. ~~SAA(s) will be available in the hotcell to accumulate solid wastes generated during the sample preparation and analyses. Organic liquids will be segregated and managed as Lab Packs; other liquid wastes will be disposed in the hotcell floor drain (RLD system) and recycled back into the WTP process.~~

Physical Properties (HC-5)

The physical properties hotcell provides space for measurements such as rheology, solids, and particle size measurements to support process operations. This hotcell is provided with a pair of MSMs, and necessary sample preparation equipment (furnaces, drying ovens, balances, etc.) to complete process testing. ~~SAA(s) will be available in the hotcell to accumulate solid wastes generated during the sample preparation and analyses. Organic liquids will be segregated and managed as Lab Packs; other liquid wastes will be disposed in the hotcell floor drain (RLD system) and recycled back into the WTP process.~~

Dissolution and Dilution Hotcells (HC-6 and HC-7)

The dissolution and dilution hotcells will be used to perform thermal-assisted acid digestion and alkali fusion dissolutions of WTP process samples. Each hotcell contains a pair of MSMs and work surface for dissolving slurry feed samples (such as from the melter feed preparation vessels) and glass shards.

The equipment used to prepare samples in the dissolution/dilution hotcells includes microwave and/or convection ovens and accessories for heating and testing sample mixtures such as furnaces, drying ovens, balances, pH meters. ~~SAA(s) will be available in the hotcell to accumulate solid wastes generated during the sample preparation and analyses. Organic liquids will be segregated and managed as Lab Packs; other liquid wastes will be disposed in the hotcell floor drain (RLD system) and recycled back into the WTP process.~~

Radionuclide Preparation Hotcells (HC-8 and HC-9)

The radionuclide preparation hotcells will be used to separate radionuclides for further isolation and also to reduce the radiological dose rate of samples for export from the hotcells for counting and analyses in ARL. The equipment required to prepare samples consists of small pre-packed ion exchange columns and other support equipment such as balances and glassware. ~~SAA(s) will be available in the hotcells to accumulate solid wastes generated during the sample preparation and analyses. Organic liquids will be segregated and managed as Lab Packs; other liquid wastes will be disposed in the hotcell floor drain (RLD system) and recycled back into the WTP process.~~

Ion Chromatography and Total Inorganic Carbon/Total Organic Carbon Preparation (HC-10)

The Ion Chromatography and Total Inorganic and Organic Carbon Preparation hotcell is used to prepare samples for IC or TIC/TOC analyses in the ARL. Liquid samples for anion and TIC/TOC analyses are diluted and transferred to the Rad Lab. Solids are digested, diluted and transferred to the Rad Lab for

analyses. This preparation is needed to reduce dose rates to an acceptable level for analysis in Rad Labs. The equipment required to prepare samples consists of containers for performing water digestions, volumetric flasks and pipettes for diluting the samples and addition of control reagents, and filtration apparatus and vacuums for assisting in sample filtration. ~~SAA(s) will be available in the hotcell to accumulate solid wastes generated during the sample preparation and analyses. Organic liquids will be segregated and managed as Lab Packs; other liquid wastes will be disposed in the hotcell floor drain (RLD system) and recycled back into the WTP process.~~

Boildown and Physical Properties (HC-11)

This hotcell will provide the capability to determine the volume reduction of sample material achievable before solids form, to test the compatibility of different waste types and to develop analytical methods. The hotcell will be outfitted with the general equipment capabilities. Equipment required to prepare and/or test samples will include stirrers to homogenize sample materials, vessels to composite samples, and filtration systems to separate solids from liquids. ~~SAA(s) will be available in the hotcell to accumulate solid wastes generated during the sample preparation and analyses. Organic liquids will be segregated and managed as Lab Packs; other liquid wastes will be disposed in the hotcell floor drain (RLD system) and recycled back into the WTP process.~~

ICP Preparation and Analyses (HC-12 and HC-13)

The ICP Preparation and Analysis hotcell receives samples prepared in hotcells 2, 3, 4, 6 & 7. These hotcells will receive samples previously diluted in the sample preparation hotcells (HC-2 and HC-3) or made into coupons in Limited Process Technology hotcell (HC-4) or from the dissolution/dilution hotcells (HC-6 and HC-7). A glovebox approximately 4 feet (ft) by 4 ft will be attached perpendicular to the exterior of each hotcell. An ICP/AES and an ICP/MS will be integrated with the gloveboxes at hotcells 13 and 14. Equipment necessary to prepare and/or analyze samples in HC-12 and HC-13 will include:

- Volumetric glassware to perform sample dilutions.
- Pipettes to add spikes and reagents to samples.
- Stirrers to homogenize solutions.
- Analytical balance to perform dilutions by weight.
- Attached glovebox exterior to the hotcell.
- ICP/AES instrument integrated with the glovebox.
- ICP/MS instrument integrated with the glovebox.
- Laser system to ablate particulates from the surface of a prepared glass coupon.
- Sample positioning and focusing system to properly ablate glass particulates.
- Optical viewing system to observe and align area of the glass coupon for ablation.

Hotcell Solid Waste Management (HC-14)

Mixed and dangerous solid waste will be accumulated ~~in~~within the hotcells in SAAs and periodically placed in waste drums. Solid waste management in the hotcell will require remote handling. Waste from the SAAs which is ready to be removed from the hotcells is transferred to HC-14 where it can be removed from the hotcells into awaiting waste drum(s). Details about secondary waste management in the Hotcell Solid Waste Management area is provided in ~~Section 4H.4.1~~Section 4H.5.1. Liquid waste along with unused sample portions can be disposed of directly to the RLD system via hotcell drains.

4H.1 Containers

This section identifies the containers and container management practices that will be followed at the Lab. The term "container" is used as defined in Washington Administrative Code (WAC) 173-303-040. Note that in this appendix and throughout the permit, terms other than containers may be used, such as canisters, boxes, bins, flasks, casks, and overpacks.

The container storage area (secondary waste) located within the Lab consists of the following rooms:

- Waste Drum Management Room (A-0139)
- Lab Pack Room (A-0139A)
- Airlock (A-0139B)
- Volume Reduction Room (A-0139C)
- Airlock/Clean Drum Export Room (A-0139D)

Container storage area dimensions at the Lab are summarized in Table 4H-4.

The following sections address waste management containers:

- Description of Containers - Section 4H.1.1
- Container Management Practices - Section 4H.1.2
- Container Labeling - Section 4H.1.3
- Containment Requirements for Storing Waste - Section 4H.1.4
- Prevention of Ignitable, Reactive, and Incompatible Wastes in Containers - Section 4H.1.5

4H.1.1 Description of Containers

These types of waste will be managed in containers:

- Miscellaneous mixed waste (secondary waste)
- Miscellaneous nonradioactive dangerous waste (secondary waste)

The waste form dictates the type of containers used for waste management. The following paragraphs describe these types of containerized waste that are managed at the Lab.

Miscellaneous Mixed Waste

Generally, miscellaneous mixed wastes are secondary wastes that may include, but are not limited to, the following items:

- Spent or failed equipment
- ~~Offgas~~HVAC HEPA filters
- Analytical laboratory waste

Spent equipment and offgas filters will typically be managed in commercially-available containers such as steel drums or steel boxes, of varying size. The containers for miscellaneous mixed waste will comply with transportation requirements, with receiving treatment, storage, and disposal (TSD) facility waste acceptance criteria, and will be compatible with the miscellaneous mixed waste. These containers may or may not include a liner. Final container selection, container and waste compatibility, and the need for liners, will be based on the physical, chemical, and radiological properties of the waste being managed.

Each miscellaneous mixed waste container will have associated documentation that describes the contents, such as waste type, physical and chemical characterization, and radiological characterization. This information will be retained within the plant information network.

Most miscellaneous secondary mixed wastes will be spent equipment and consumables such as pumps, air lances, HEPA filters, etc., and are not expected to contain liquids. If wastes are generated that contain small quantities of liquids, ~~these wastes may~~absorbent products will be ~~treated~~added to ~~remove or~~ absorb liquids, to comply with the receiving TSD facility waste acceptance criteria. In addition, the analytical laboratory will generate containerized liquid waste (Lab Packs).

Miscellaneous Nonradioactive Dangerous Waste

Each nonradioactive dangerous waste container will have associated documentation that describes the contents, such as waste type and physical and chemical characterization. Typically, commercially available containers will be used. The types of containers used for packaging nonradioactive dangerous waste will comply with the receiving TSD facility waste acceptance criteria and transportation requirements. However, final container selection, container and waste compatibility, and the need for liners will be based on the physical and chemical properties of the waste being managed.

4H.1.2 Container Management Practices

The following paragraphs describe how each of the containers used at the Lab are managed.

4H.1.2.1 Miscellaneous Mixed Waste and Miscellaneous Nonradioactive Dangerous Waste Containers

Miscellaneous Mixed Waste Containers

Miscellaneous mixed waste (secondary waste) will be managed in:

- Laboratory waste management area (A-0139 and A-0139A/B/C/D)

Containers will be kept closed unless waste is being added, removed, or sampled while in the containment storage areas. Containers stored in these areas will be placed on pallets, or otherwise elevated to prevent contact with liquid, if present. Table 4H-4 summarizes the dimensions and maximum capacity of miscellaneous mixed waste storage areas. Containers will be managed in designated areas throughout the Lab, and then transferred to a suitable TSD facility.

The laboratory waste management area (A-0139 and A-0139A/B/C/D) will be located in the southern portion on the 0 ft elevation of the Lab. The unit will be used for storage of miscellaneous waste containers prior to disposition to a receiving TSD facility. The aisle space will be 30 inches (in.) and waste containers may or may not be stacked. This unit's storage capacity is listed in Table 4H-4.

Miscellaneous Nonradioactive Dangerous Waste Containers

Miscellaneous dangerous waste containers will typically be managed in ~~permitted or~~ non-permitted waste management units (SAAs and less-than-90-day storage areas) located throughout the Lab. Containers will be kept closed unless waste is being added, removed, or sampled. They will routinely be moved by forklift or drum cart, and will be managed in a manner that prevents ruptures and leaks.

4H.1.2.2 Waste Tracking

The plant information network interfaces with the integrated control network and is designed to collect and maintain plant information. The plant information network is currently planned to include the following systems (all systems used at the plants/facilities and balance of facilities are provided for information only):

- Plant data warehouse and reporting system

- Laboratory information management system
- Waste tracking and inventory system

Inventory and Batch Tracking

The waste tracking and inventory system will interface with the information system data historian to provide reporting information such as tank volumes, waste characteristics, and facility inventories of process waste. The waste tracking system will also be used to query operations parameters at any time information is needed, as specified by operations, to manage the process system.

Secondary Waste Stream Tracking

Containerized secondary waste streams and equipment will be tracked and managed through commercially available database management software. Containers will be mapped in each plant and updated during the inspection process using a commercially available drawing software application.

Laboratory Information Management System

The laboratory information management system (LIMS) will be an integral feature of the plant information network. The LIMS will serve as an essential tool for providing data management of regulatory and processing samples. The chosen LIMS will be a commercial off-the-shelf software package designed for performing laboratory information management tasks as described in ASTM E1578-93, *Standard Guide for Laboratory Information Management Systems (LIMS)*.

The LIMS will track the flow of samples through the laboratory. Samples received in the laboratory will be identified with a unique identification label. The identification label provides details of the sample process stream. Baseline analyses are defined by the requesting plant. Additional analyses, as required, will be input into LIMS by laboratory analysts. Data will be input into LIMS manually or by data transfer using LIMS/instrument interface. Analyses will be performed using approved and validated analytical procedures.

Analytical results will be compiled by the LIMS and held pending checking and approval by appropriate staff. Approved results will be reported to the requesting plant.

4H.1.3 Container Labeling

Miscellaneous Mixed Waste Containers

The miscellaneous mixed waste containers will be labeled with the accumulation or generation start date, as appropriate, the major risk(s) associated with the waste, and the words “hazardous waste” or “dangerous waste.” A waste tracking and inventory system will be implemented. Labels and markings will be positioned so that required information is visible. The label will meet the WAC 173-303-630(3) requirements, and the dangerous waste number will be clearly identified.

Miscellaneous Dangerous Waste Containers

The miscellaneous dangerous waste drums will be labeled with the accumulation or generation start date, as appropriate, the major risk(s) associated with the waste, and the words “hazardous waste” or “dangerous waste”. A waste tracking and inventory system will be implemented. Labels and markings will be positioned so that required information is visible. The label will meet the WAC 173-303-630(3) requirements, and the dangerous waste number will be clearly identified.

4H.1.4 Containment Requirements for Storing Waste

Secondary containment requirements for the waste are discussed below.

4H.1.4.1 Secondary Containment System Design

Secondary containment is required for areas in which containers hold free liquids. It is also required for areas managing wastes exhibiting the characteristics of ignitability or reactivity as defined in WAC 173-303-090(5) and (7).

Miscellaneous Mixed Waste

~~Miscellaneous mixed waste storage areas may contain waste requiring secondary containment. If wastes containing liquids or wastes exhibiting the characteristics of ignitability or reactivity are generated, portable secondary containment that meets the requirements of WAC 173-303-630(7) will be provided.~~Containers can be placed on portable secondary containment systems or elevated (e.g., pallets, skids), to protect the containers from contacting accumulated liquids. Waste that does not contain free liquids or is not ignitable or reactive does not require a containment device as stated in WAC 173- 303-630(7)(c) since the areas are within a building and are protected from precipitation. Further documentation discussing how WTP meets the WAC and permit requirements for storage areas in the Lab are located in the operating record.

~~Miscellaneous Dangerous Waste~~

~~Miscellaneous dangerous waste storage areas may contain waste requiring secondary containment. If wastes containing liquids or wastes exhibiting the characteristics of ignitability or reactivity are generated, portable secondary containment that meets the requirements of WAC 173-303-630(7) will be provided.~~

~~System Design~~ Miscellaneous Dangerous Waste

Containers can be placed on portable secondary containment systems or elevated (e.g., pallets, skids), to protect the containers from contacting accumulated liquids. Waste that does not contain free liquids or is not ignitable or reactive does not require a containment device as stated in WAC 173- 303-630(7)(c) since the areas are within a building and are protected from precipitation. Further documentation discussing how WTP meets the WAC and permit requirements for storage areas in the Lab are located in the operating record.

4H.1.4.2 System Design

The exterior walls of the WMA are constructed of reinforced concrete and the entire floor area is coated with a special protective coating. Coatings are provided to support the clean-up and decontamination of a potential spill and are not designed to provide secondary containment. The secondary containment requirement for containers containing liquid waste is met by using portable secondary containment pallets. The container storage areas in Rooms A-0139 and A-0139A, A-0139B, A-0139C, and A-0139D are not designed with containment systems as stated in WAC 173-303-630(7)(c) since the areas are within a building and protected from precipitation. Containers can be placed on portable secondary containment systems or elevated (e.g., pallets, skids), to protect the containers from contacting accumulated liquids. Waste that does not contain free liquids or is not ignitable or reactive does not require a containment device as stated in WAC 173- 303-630(7)(c) since the areas are within a building and are protected from precipitation.

Miscellaneous Mixed Waste

There will be a miscellaneous mixed waste (secondary waste) container storage area at the Lab, as follows:

- Laboratory waste management area (A-0139 and A-0139A/B/C/D)

~~Miscellaneous Dangerous Waste~~

- Miscellaneous mixed waste containers can be placed on portable secondary containment systems or elevated (e.g., pallets, skids), to protect the containers from contacting accumulated liquids. Waste that does not contain free liquids or is not ignitable or reactive does not require a containment device as stated in WAC 173- 303-630(7)(c) since the areas are within a building and are protected from precipitation. Further documentation discussing how WTP meets the WAC and permit requirements for storage areas in the Lab are located in the operating record.

Miscellaneous Dangerous Waste

~~Containers with liquids will be provided with portable secondary containment meeting the requirements of WAC 173-303-630(7).~~

- Miscellaneous dangerous waste containers can be placed on portable secondary containment systems or elevated (e.g., pallets, skids), to protect the containers from contacting accumulated liquids. Waste that does not contain free liquids or is not ignitable or reactive does not require a containment device as stated in WAC 173- 303-630(7)(c) since the areas are within a building and are protected from precipitation. Further documentation discussing how WTP meets the WAC and permit requirements for storage areas in the Lab are located in the operating record.

~~4H.1.4.2~~4H.1.4.3 Structural Integrity of the Base

The ~~storage areas will be constructed~~WMA floor is not designed nor intended to ~~support storage and transportation~~, provide secondary containment of materials. Therefore, no structural integrity assessment is required. Secondary containment is provided by commercially available portable secondary containment pallets/devices designed to contain 10% of the volume of all containers within the containment pallet, or the volume of the largest container ~~storage areas and will be designed with the following:~~, whichever is greater.

- ~~Containment system capable of collecting and holding spills and leaks.~~
- ~~Base will be free of cracks and gaps and sufficiently impervious to contain leaks.~~
- ~~Positive drainage control.~~
- ~~Sufficient containment volume.~~
- ~~Sloped to drain or remove liquid, as necessary.~~

~~4H.1.4.3~~4H.1.4.4 Containment System Capacity

Miscellaneous Mixed Waste

Liquid waste may be stored in the laboratory waste management area. Each container holding liquid dangerous waste will be placed into portable secondary containment that meets the requirements of WAC 173-303-630(7). The waste container will function as the primary containment while the portable containment device will function as the secondary containment.

Each portable secondary containment will have the capacity to contain 10% of the volume of all containers within the containment area, or the volume of the largest container, whichever is greater.

Miscellaneous Dangerous Waste

Each container holding liquid nonradioactive dangerous waste will be placed into portable secondary containment. The waste container will function as the primary containment while the portable ~~sump~~secondary containment will function as the secondary containment.

Each portable secondary containment will have the capacity to contain 10% of the volume of all containers within the containment area, or the volume of the largest container, whichever is greater. Typically, the waste containers will be steel drums.

~~4H.1.4.4~~4H.1.4.5 Control of Run-On

Miscellaneous Mixed Waste

Run-on will not reach the interior of the miscellaneous mixed waste storage areas, because they will be located within ~~buildings, which will have roof~~the Lab building which is provided with a grated precipitation collection trough located outside of the container storage area roll-up doors. Additionally, the building is provided with gutters to remove precipitation.

Miscellaneous Dangerous Waste

Run-on will not reach the interior of the miscellaneous dangerous waste storage areas, because the Lab building is provided with a grated precipitation collection trough located outside of the container storage area roll-up doors. Miscellaneous dangerous waste will be managed in buildings with walls and roof to remove precipitation.

~~4H.1.4.5~~4H.1.4.6 Removal of Liquids from Containment System

Miscellaneous Mixed Waste

Portable secondary containment ~~sumps~~ will be provided for individual containers that contain liquids. Hand pumps or similar devices will be used to remove liquid released to the portable secondary containments.

Miscellaneous Dangerous Waste

Portable secondary containment ~~sumps~~ will be provided for individual containers that contain liquids. Hand pumps or similar devices will be used to remove liquid released to the portable secondary containments.

~~4H.1.4.6~~4H.1.4.7 Demonstration that Containment is not Required because Containers do not Contain Free Liquids, Wastes that Exhibit Ignitability or Reactivity, or Wastes Designated F020-023, F026 or F027

Miscellaneous Mixed Waste

Liquids may be present in wastes in the laboratory waste management area. Secondary containment will be provided for individual containers that manage liquids. ~~The laboratory waste management area may manage D001 and D003 waste.~~ Wastes with the F020-F023, F026, and F027 numbers are not identified for the DST system. Therefore, these waste numbers will not be present at the Lab.

Miscellaneous Dangerous Waste

Secondary containment will be provided for individual containers that manage liquids. Wastes with the F020-F023, F026, and F027 numbers are not identified for the DST system. Therefore, these waste numbers will not be present at the Lab.

4H.1.5 Prevention of Reaction of Ignitable, Reactive, and Incompatible Wastes in Containers

Ignitable, Reactive, or Incompatible Miscellaneous Mixed Waste and Miscellaneous Dangerous Waste

~~Potentially incompatible wastes are not expected to be managed in the miscellaneous mixed waste storage areas, except for the laboratory waste management area. If such wastes are managed in this area, the~~The Lab generates and stores containers of ~~incompatible~~dangerous or mixed waste exhibiting the

characteristics of reactivity (D003) and ignitability (D001) as defined in WAC 173-303-090(5) and (7). Incompatible waste includes waste ~~or chemicals will not be stored in close proximity to each other.~~that is unsuitable for mixing with another waste or material because the mixture might produce heat or pressure, fire or explosion, violent reaction, toxic fumes, mists, or gases, or flammable fumes or gases. Proper precautions are taken to prevent any off-normal situations from occurring. Acids and bases ~~will be~~are stored in flammable storage cabinets or on separate portable secondary ~~containment sumps~~containments; oxidizers ~~will be~~are stored ~~in areas separate~~separately from combustible materials; and corrosive ~~chemicals will be~~waste are stored on ~~a~~ separate portable secondary ~~containment sump.~~containments or in flammable cabinets. These separate storage areas within the ~~unit will be~~WMA are clearly marked with signs indicating the appropriate waste ~~to be stored in each area.~~ category. Incompatible waste containers are stored at least thirty inches apart.

Separate labpack containers are used, and other waste types are not packed with ignitable waste. Ignitable, reactive, or incompatible waste is separated from containers of other waste types in the WMA. Within the WMA, ignitable or reactive waste are placed on separate portable secondary containment systems, such as individual spill pallets. Personnel inspect the containers for proper packaging, marking, and waste information before transport. Potentially incompatible waste will be stored at least one aisle width (30") apart.

4H.2 Tank Systems

4H.2.1 Radioactive Liquid Waste Disposal (RLD) System

The analytical laboratory RLD system is primarily composed of the following:

- Floor Drain Collection Vessel (RLD-VSL-00163)
- Laboratory Area Sink Collection Vessel (RLD-VSL-00164)
- Hotcell Drain Collection Vessel (RLD-VSL-00165)
- Associated ancillary equipment

The Floor Drain Collection Vessel (RLD-VSL-00163) collects, contains, and transfers noncontaminated liquid effluent. The floor drain collection vessel is identified as part of the RLD system. It is not designed or permitted to manage mixed or dangerous wastes. If a spill or release were to occur that contaminated this vessel, the vessel will be discharged to the Laboratory Area Sink Collection Vessel (RLD-VSL-00164) or the Hotcell Drain Collection Vessel (RLD-VSL-00165) and rinsed with water prior to being returned to service. This vessel collects effluent from radiological laboratory floor drains, eyewash, and safety shower equipment. The vessel also collects effluent from the C2 area floor drains located in areas such as the laboratory area corridors, hotcell bay area, and the filter room.

~~Liquid waste management~~The laboratory area sink drain collection vessel (RLD-VSL-00164) is located in the ~~hotcell will require remote handling prior to disposal to the Hotcell Drain Collection~~C3 Effluent Vessel ~~(RLD-VSL-00165) from low point drains.~~ Cell under the C3 filter/fan room in the Lab. Aqueous liquid ARL waste consists of samples (unused and residues), dilutions, and dissolution aliquots prepared for analysis. Liquids will be partially neutralized to reduce corrosivity ~~before they are discharged to the liquid waste system.~~. Containers of aqueous liquids will be poured down ARL fume hood sink drains and flushed with a minimum of 0.5gallon of flush water for each 40 milliliters (mL) of sample before they are discharged to the RLD-VSL-00164. While operating in the DFLAW configuration, the contents laboratory area sink drain collection vessel will be transferred to the EMF DEP system for evaporation and treatment prior to being returned to the LAW vitrification process, or treated at the Liquid Effluent Retention Facility/Effluent Treatment Facility (LERF/ETF). During cold commissioning, the vessel may discharge to a tanker truck.

After the PT Facility is brought on-line, while operating in the baseline configuration, the contents of the laboratory area sink drain collection vessel will be transferred to the hotcell drain collection vessel (RLD-VSL-00165). The contents of RLD-VSL-00165 are then transferred to the PTF for treatment in the PTF and HLW vitrification process or treated at the LERF/ETF.

In the Baseline configuration liquid waste management in the hotcell will require remote handling prior to disposal to the Hotcell Drain Collection Vessel (RLD-VSL-00165) from hotcell cup sink drains. Aqueous liquid AHL waste consists of samples (unused and residues), dilutions, and dissolution aliquots prepared for analysis. Liquids will be partially neutralized to reduce corrosivity before they are discharged to the liquid waste system. Containers of aqueous liquids for disposal are moved to and poured down ~~low point drain~~hotcell cupsink drains using the MSMs along with a minimum of 0.~~5 gallon~~5gallon of flush water for each 20 milliliters (mL) of ~~waste.~~ sample.

Liquid waste information (including quantity of liquid waste per disposal and identification of the sample that generated the waste) for each of the LAB RLD vessels is updated in LIMS using the computer workstation.

4H.2.2 Autosampling System (ASX) ~~System~~

The ASX is considered one of the laboratory systems; however, it includes components in the other WTP facilities. The ASX ~~system~~ includes the autosampling assemblies in each of the WTP chemical process facilities and the Pneumatic Transfer System (PTS) that transports samples between those facilities and the Lab~~.~~ and will only be operational in the Baseline configuration. Samples from the EMF will be manually transferred to the Lab. The ASX is a support system that collects and manages samples from each of the process facilities. The DWP regulates the secondary containment of sample feed and sample return process piping and sample line flush piping internal to the PTF, HLW and LAW sampler as described in Section 4H.2.2.1, Autosampler Secondary Containment and Leak Detection Functions.

Four ASX samplers are located in the PTF, three are located in the HLW facility, and two are located in the LAW facility. Each sampler interfaces with the process systems that require sampling of their contents via a process sample pipe loop. The loop will deliver process waste for sample collection to the sampler and return the pumped fluid, minus the collected sample, to the vessel from which it originated.

The PTS is a network of transport tubes, diverters, exhausters, HEPA filters, and controlled arrival stations that work concurrently to transfer the carriers and sample bottles to and from the analytical laboratory. Low-activity samples are delivered to the Fumehood Receipt Station in the analytical laboratory. The HCRS is the analytical laboratory receipt station for HLW and PTF samples. The Autosampling Control System (ASJ) will control and monitor the ASX process.

For high-frequency sampling and for highly radioactive, medium activity and transuranic-bearing streams, the sampling process is automated. Manual sampling techniques are primarily reserved for low-activity, low frequency, and large volume sample applications, or where needle-sampling techniques are inappropriate.

The WTP sampling systems for high-activity (HA) and low-activity (LA) sampling are independent and segregated because of the requirements for handling the HA samples when they reach the Lab. Both the HA and LA sample lines will transfer only one sample carrier at a time. The HA sampling system collects and pneumatically transfers samples from the PTF and HLW facilities to the ~~Sample Receipt~~Lab Hotcell ~~(HC-1).~~. The LA sample line transfers samples collected from the LAW facility directly to the radiological laboratory. Diverters will provide junction points that enable the sample carriers to be routed to and from destinations on the transfer line. Tracking switches along the transfer lines will be used to track sample carrier movement. In addition to the primary HA and LA sample lines, samples from the tank farms or other locations, and grab samples taken from WTP facilities, will be manually delivered to the Lab in shielded sample carriers.

Process liquids will be circulated through pipe lines into and out of the autosampler enclosures. Samples are collected by the ISOLOK samplers located in these recirculation loops. A supply line isolation valve will secure the recirculation process upon completion of sampling.

The mechanical process for ASX sample collection will commence by dispatching a carrier and sample bottle from the storage/dispatch magazine in the Lab and receiving it at the sampler docking station. The robotic arm will interface with the carrier at the glovebox docking port to retrieve the empty sample bottle from the carrier. The robotic arm will drive the sample bottle on to the ISOLOK sample injection needle. The ISOLOK captures, retains, and injects a specific volume of process material into the sample bottle. The ISOLOK sampler uses a pneumatically driven plunger to "grab" a measured sample volume of flowing material with each extension and retraction. The quantity collected for a sample, then, will be determined by the number of strokes set for the sample drawn.

The robotic arm replaces the filled sample bottle into the carrier, at the glovebox docking port, and the carrier is then flown through the PTS flight tube back to the HA or LA Lab receipt station where the sample will be retrieved for analysis. The carrier will also contain any potential leakage in the event of sample bottle damage or malfunction.

In conjunction with this sample collection sequence, two seal tests are performed. The Arm Interspace Seal Test (AIST) occurs at the initiation of a sample sequence. It confirms that the robotic arm has an effective seal on the docking port. The Carrier Interspace Seal Test (CIST) is performed when the carrier has been sealed against the docking port. It confirms that both the robotic arm and the carrier are sealed against the docking port. The CIST occurs prior to lifting the robotic arm off the docking port. The seal tests are performed to ensure that air from the glovebox confinement cannot be drawn into the PTS.

The ISOLOK sampler is flushed after sample collection to prevent needle plugging and to prevent cross contamination of subsequent samples. To flush the ISOLOK sampler, the sample vial with a triple septum cap will be repositioned with respect to the discharge needle so that water can be applied at a port that allows flow through the vent needle opening. The septum is punctured by the sample collection needles, and the vial is held in place while activating the flush valve. The sample plunger will be partially extended to align the ISOLOK port for this flush operation, which will continue until water runs clear, generating approximately 250 ml of secondary waste.

4H.2.2.1 Autosampler Secondary Containment and Leak Detection Functions

The ASX samplers in the PTF, HLW and LAW facilities contain both upper and lower secondary containment liners and leak detection systems. The upper containment area is designed to collect a potential leak from the incoming sample feed and return lines where they connect to the ISOLOK sampling device. If a leak occurs in the upper containment area, the leak flows to the sloped liner which diverts the leak to the annular space of the coaxial sample return lines. Leaks flow down the secondary containment pipe and discharge to secondary containment with leak detection, typically a sump with a radar level detector. The ASX sample feed and sample return lines, and the routing of potential leaks in the annular space of the return lines are shown on the associated process system P&IDs provided in Operating Unit Group 10, Appendices 8.2, 9.2, and 10.2.

The sloped stainless steel liner in the lower containment area is designed to divert liquids to a sloped collection trough. The trough contains a removable weir that allows liquids to collect and activate the thermal level detection switch and alarms to indicate that a leak has occurred. Effluent from a leak flows to the same drain line that manages ISOLOK flush solutions. The ISOLOK flush lines terminate below the top of the trough drain to ensure that the leak detection system is not activated when flushing the ISOLOK. The ASX lower containment area drain lines are shown on the associated process system P&IDs provided in Operating Unit Group 10, Appendices 8.2, 9.2, and 10.2. Typical autosampler secondary containment design details are provided in the Secondary Containment Design permit document provided in Operating Unit Group 10, Appendix 7.5.

The ASX secondary containment liner, liner trough, weir, leak detection instruments, coaxial sample feed and sample return piping make up the secondary containment and leak detection systems for the PTF, HLW and LAW ASX samplers. The balance of the ASX sampler equipment in each facility; the ASX pneumatic sample transfer lines between facilities, and the ASX sample receipt system in the Lab are not part of the ASX secondary containment system, and are excluded from the WTP permit by the sample exclusion [WAC 173-303-071(l)]. ~~ASX upper and lower secondary containment liner dimensions are provided in Table 4H-2.~~ Drain line and leak detection instrument design details are provided in Table 4H-3.

If a spill occurs in either the upper and lower containment area, these areas can be rinsed. In the upper containment area, a wash wand will be provided to allow for localized wash if required. In the lower containment area, a spray ring and spray wands are provided to rinse this containment area. Wash solutions will be directed to the required location by the operator. Valves mounted externally to the autosampler allow the operator to deliver a wash stream to targeted areas that may require decontamination.

4H.3 Air Emission Control

The analytical laboratory ventilation systems include C1V, C2V, C3V, and C5V systems that aid in the containment and confinement of radiological and hazardous chemical constituents. Clean occupied areas without contamination potential are classified as C1 and will be isolated from areas with the potential for contamination (C2) and from areas with restricted occupancy, normal radiological hazards and higher contamination potential (C3 and C5).

C3 areas are restricted occupied areas and allow operator access under administrative controls as required for scheduled maintenance and operations. C5 areas have the highest contamination potential and will normally be unoccupied. These areas have, by virtue of their location and the activities performed within them, an increased potential for the release of contamination. The design objectives of the analytical laboratory HVAC system, and therefore the C5 area ventilation system, will be as follows:

- Aid in the confinement and containment of radiological and hazardous chemical contamination sources.
- Remove airborne particulates from the discharge air to ensure that emissions are within prescribed limits.
- Maintain space temperatures within the indoor design conditions.
- Satisfy safety requirements and codes and standards that are a part of the Safety Requirements Document.

The C5V ventilation system, which services the hotcells and the Hotcell Drain Collection Vessel (RLD-VSL-00165), will be isolated while in the DFLAW configuration.

The C5 area ventilation system is being designed to maintain a negative pressure in the C5 areas with respect to the surrounding areas. Hotcell ventilation, the Hotcell Drain Collection Vessel (RLD-VSL-00165), and the C3 maintenance shop glovebox will be exhausted to the C5 ventilation system. Fume hoods within the Rad Labs, the waste reduction and lab pack room, and the C3 maintenance shop will be exhausted to the C3 ventilation system. The ventilation from C2 and C3 areas will be filtered through a single stage of HEPA filters and exhausted through the analytical laboratory stacks. Air cascading into the C5 areas from the adjacent C2 and/or C3 areas will be exhausted through the analytical laboratory building stacks by the C5 exhaust fans after passing through two stages of HEPA filter banks.

4H.4 Laboratory Maintenance

The analytical laboratory maintenance shop provides space for performing preventive and corrective maintenance on laboratory equipment. There will be two shops, located in different potential contamination areas. The C3 shop allows decontamination, maintenance, and storage of contaminated equipment such as hotcell manipulators. The C3 maintenance shop will be ventilated to the C3 ventilation system, and effluent from the C3 maintenance shop discharges to the Laboratory Area Sink Collection Vessel (RLD-VSL-00164). The C2 shop will provide space for the maintenance of equipment that is not expected to be radioactively contaminated such as electrical components, utilities systems components, and instruments, and will be ventilated to the C2 ventilation system.

A list of proposed maintenance activities that will be performed in the analytical laboratory maintenance shops is provided below.

Analytical Laboratory Maintenance and Waste Management Activity Summary

Task Description	Lab C3 Shop	In-Situ Activities
Filter change out [a]		X
Manipulator maintenance and repair [b]	X	X
Valve maintenance and repair		X
Pump maintenance and repair	X	X
Exhaust fan maintenance and repair		X
Repair and maintenance of fabricated equipment	X	X
Instrument maintenance and calibration	X	X

a Spent filters will be disposed of following filter changeout using approved maintenance, waste management, and radiological procedures.

b Manipulators requiring extensive repairs will be pulled and transferred to the C3 workshop for decontamination. Once the contamination levels are reduced to within acceptable limits for hands-on maintenance, the manipulator will be repaired using approved maintenance and radiological procedures.

4H.5 Solid Waste Management

Mixed and dangerous solid waste will be accumulated in hotcells and periodically placed in waste drums. Waste from the individual hotcells will be transferred to a waste management cell where waste management, consolidation, and packaging activities are conducted. The waste cell contains tools and equipment to complete size reduction. These solid mixed and dangerous wastes as well as organic lab pack wastes will be transferred into waste drums prior to being transferred to the laboratory waste drum management area. Mixed and dangerous solid waste and organic lab pack wastes from the Rad Labs and maintenance areas will be accumulated in the individual labs and shops until they are transferred to the laboratory waste management area for waste consolidation and volume reduction. Waste consolidation will be completed in the volume reduction and lab pack rooms in the waste drum management area.

Laboratory secondary solid wastes will be transferred to Hanford site and off-site treatment facilities for treatment as needed. Treated secondary wastes will be transferred to Hanford site TSD site (IDF or Low-Level Burial Grounds) for disposal. Low-level radioactive wastes will be transferred to a Hanford site low-level radioactive disposal facility.

4H.5.1 Hotcell Solid Waste Management

Mixed and dangerous solid waste will be accumulated in hotcells and periodically placed in waste drums. Solid waste management in the hotcell will require remote handling. Waste from the individual hotcells will be transferred to HC-14 where waste management, consolidation, and packaging activities are conducted. The waste cell contains tools and equipment to complete size reduction. These wastes will be transferred into waste drums prior to being transferred to the laboratory waste drum management area. Hotcell wastes will only be generated in the Baseline configuration.

Wastes generated in the hotcell area of the Lab are not packaged in the Waste Drum Management Area. Packaging and volume reduction of hotcell wastes, including high-activity wastes is completed in HC-14 prior to being transferred to the Waste Drum Management Area for storage.

4H.5.2 Container Storage Area for the Analytical Laboratory

The Lab Container Storage Area is located at the 0'-0" elevation and is referred to as the Waste Drum Management Area on laboratory facility drawings, and in laboratory system description documents. The Waste Drum Management Area includes five waste management rooms (139, 139A, B, C &D) located inside of the Lab facility. Room A-0139, the Waste Drum Management Room, is the primary dangerous and mixed secondary waste storage room, and is used to provide segregation of wastes. Separation of wastes will be provided to meet the separation distances provided in Uniform Fire Code and applicable sections of WAC 173-303.

The potential for precipitation inflow into the area is mitigated by a dry sump located inside the roll-up door on the south side of the airlock/clean drum export area.

Segregation and secondary containment for waste drums containing liquids will be provided by commercially available portable spill containment pallets/devices designed to contain 10 percent of the volume of all of the containers within the containment system or the volume of the largest container, whichever is greater. The exterior walls of the waste drum storage area are constructed of reinforced concrete and the entire floor area of the waste drum storage area is coated with a special protective coating. This coating is not designed to provide secondary containment. Coatings are provided to support the clean-up and decontamination of a potential spill.

Room A-0139A is equipped with a walk-in fume hood to support the packaging of organic liquids and other lab pack wastes. The room will be used to package and add absorbent to waste packages to comply with Hanford Site Solid Waste Acceptance Criteria (HSSWAC) and/or off-site disposal facility waste acceptance criteria for liquid and lab pack wastes. Room A-0139B is an airlock separating the main waste drum area and the lab pack and volume reduction areas. Room A-0139C is equipped with an in-drum compaction unit design to reduce the volume of low-activity wastes generated in the ~~Rad Lab~~ARL areas. Because volume reduction and the packaging of wastes to meet transportation and/or disposal facility waste acceptance criteria is not a permitted activity~~.~~, manufacturer cut sheets for support equipment in these rooms is not included in the package. The fifth room is Room A-139D, the airlock/clean drum export area. This area is used to provide additional storage, segregation, and management of waste containers prior to transfer to WTP, Hanford Site, or off-site waste disposal facilities.

Table 4H-1 Analytical Laboratory Tank Systems						
No.	**System**	**Vessel Number/Location**	**Description**	**Material**	**Total Volume (US Gallons)**	**Approximate Dimensions (Inside Diameter) × Height or Length in feet and inches (tangent line/tangent line)**
1	RLD	RLD-VSL-00164 A-B003	Laboratory Area Sink Drain Collection Vessel	6% Mo	3,180	8’ 6” x 5’ 9”
2	RLD	RLD-VSL-00165 A-B004	~~Hotcell~~Hotcell Drain Collection Vessel	6% Mo	9,100	16’ 0” x 2’ 3”

Table 4H-2 Analytical Laboratory Tank Systems Secondary Containment ~~Rooms/~~Areas				
Room/Area	**Approximate Room/Area Dimensions (L×W, in feet)**	**Miscellaneous Treatment Units or Tanks in Room/Area (Largest Plant Item)**	**Volume of Largest Plant Item in Room/Area (US Gallons)**	**Minimum Secondary Containment Height (feet)**
A-B003 Lab Area Sink Drain Collection Vessel Cell	27ft 3in x 13ft	Laboratory Area Sink Drain Collection Vessel RLD-VSL-00164	3,180	3.8
A-B004 Hot Cell Drain Collection, Vessel Cell	29ft x 21ft	Hot Cell Drain Collection, RLD-VSL-00165	9,100	2.7

Table 4H-3 Analytical Laboratory Sumps, Leak Detection Boxes, and Floor Drains/Lines				
Sump/Leak Detection Box or Floor Drain/Line I.D.#, Room, and Elevation	**Maximum Sump/Leak Detection Box Capacity (US Gallons)**	**Sump/Leak Detection Box Level Detection Type**	**Sump/Leak Detection Box or Floor Drain/Line Dimensions (approximate) and Materials of Construction**	**Piping and Instrumentation Diagram Number**
Analytical Laboratory				
Sumps				
RLD-SUMP-00041 A-B003 (C3 Effluent Vessel Cell, El. -18'7")	30	Radar	30" Dia. x 13" Deep Stainless Steel	**24590-LAB** -M6-RLD-00002001
RLD-SUMP-00042 A-B004 (C5 Effluent Vessel Cell, El. -19'2")	30	Radar	30" Dia. x 13" Deep Stainless Steel	**24590-LAB** -M6-RLD-00001001
RLD-SUMP-00045 A-B002 (C3 Pump Pit Sump, EL -6'-81/2"LP)	1.60	Radar	2'-0" x 2'-6" x 1/2" Stainless Steel	**24590-LAB** -M6-RLD-00002003
RLD-SUMP-00043A A-B007 (C5 Pump Pit Sump, EL -6'-7"LP)	1.60	Radar	1'-6" x 3'-0" x 1/2" Stainless Steel	**24590-LAB** -M6-RLD-00001002
RLD-SUMP-00043B A-B005 (C5 Pump Pit Sump, EL -6'-7" LP)	1.60	Radar	1'-6" x 3'-0" x 1/2" Stainless Steel	**24590-LAB** -M6-RLD-00001003
RLD-SUMP-00044 A-B006 (C5 Piping Pit Sump, EL -6'-7" LP)	1.60	Radar	2'-0" x 2'-6" x 1/2" Stainless Steel	**24590-LAB** -M6-RLD-00001004
Leak Detection Boxes				
RLD-LDB-00002 A-B004 (C5 Effluent Vessel Cell, El. -10')	6	Thermal Dispersion	8" Dia. x 24" Length/ Stainless Steel	**24590-LAB** -M6-RLD-00008001
RLD-LDB-00004 A-B004 (C5 Effluent Vessel Cell, El. -10')	6	Thermal Dispersion	8" Dia. x 24" Length/ Stainless Steel	**24590-LAB** -M6-RLD-00008001

Table 4H-3 Analytical Laboratory Sumps, Leak Detection Boxes, and Floor Drains/Lines				
Sump/Leak Detection Box or Floor Drain/Line I.D.#, Room, and Elevation	**Maximum Sump/Leak Detection Box Capacity (US Gallons)**	**Sump/Leak Detection Box Level Detection Type**	**Sump/Leak Detection Box or Floor Drain/Line Dimensions (approximate) and Materials of Construction**	**Piping and Instrumentation Diagram Number**
RLD-LDB-00005 A-B003 (C3 Effluent Vessel Cell, El. -10’)	6	Thermal Dispersion	8” Dia. x 24” Length/ Stainless Steel	**24590-LAB** -M6-RLD-00007001
RLD-LDB-00006 A-B003 (C3 Effluent Vessel Cell, El. -10’)	6	Thermal Dispersion	8” Dia. x 24” Length/ Stainless Steel	**24590-LAB** -M6-RLD-00007001
RLD-LDB-00007 A-B003 (C3 Effluent Vessel Cell, El. -10’)	6	Thermal Dispersion	8” Dia. x 24” Length/ Stainless Steel	**24590-LAB** -M6-RLD-00007001
RLD-LDB-00008 A-B003 (C3 Effluent Vessel Cell, El. -10’)	6	Thermal Dispersion	8” Dia. x 24” Length/ Stainless Steel	**24590-LAB** -M6-RLD-00007001
RLD-LDB-00009 A-B004 (C5 Effluent Vessel Cell, El. -10’)	6	Thermal Dispersion	8” Dia. x 24” Length/ Stainless Steel	**24590-LAB** -M6-RLD-00008001
RLD-LDB-00011 A-B003 (C3 Effluent Vessel Cell, El. -10’)	6	Thermal Dispersion	8” Dia. x 24” Length/ Stainless Steel	**24590-LAB** -M6-RLD-00007001
Drain Lines				
RLD-WU-02207-S11E-04 Drain Line A-B003, (C3 Effluent Vessel Cell, El. -18’7”)	N/A	N/A	4” Dia. 316L	**24590-LAB** -M6-RLD-00002001
RLD-ZN-02203-S11E-04 Drain Line A-B004, (C5 Effluent Vessel Cell, El. -19’2”)	N/A	N/A	4” Dia. 316L	**24590-LAB** -M6-RLD-00001001
RLD-ZN-03393-S11E-04 Drain Line A-B004, (C5 Effluent Vessel Cell, El. -19’2”)	N/A	N/A	4” Dia. 316L	**24590-LAB** -M6-RLD-00001001
RLD-ZN-03394-S11E-04 Drain Line A-B004, (C5 Effluent Vessel Cell, El. -19’2”)	N/A	N/A	4” Dia. 316L	**24590-LAB** -M6-RLD-00001001

Table 4H-4 Analytical Laboratory Container Storage Areas		
Container Storage Area	**Maximum Waste Volume (US Gallons) 1**	**Approximate Dimensions (L × W × H, in feet) 2**
Analytical Laboratory		
1. Laboratory Waste Management Area (A-0139 and A-0139A/B/C/D)	139,586	49’ x 38’ x 10’

[1] The conversion factor used to convert from cubic feet to gallons is 7.4805 gal/ft^3.

[2] The dimension for height (H) is based on the height of the largest waste container stored in the area (i.e., LAW container is 7.5 ft, HLW canister is 15 ft, melters are assumed to be 16 ft, and a B-25 box is 5 ft - stacked a maximum of two high is 10 ft).

APPENDIX 4I
BALANCE OF FACILITIES

This page intentionally left blank.

APPENDIX 4I
BALANCE OF FACILITIES

TABLE OF CONTENTS

1 4I BALANCE OF FACILITIES (BOF) 1
2 4I.1 Containers 1
3 4I.1.1 Description of Containers 2
4 4I.1.2 Container Management Practices 3
5 4I.1.2.1 Miscellaneous Mixed Waste and Miscellaneous Nonradioactive Dangerous Waste
6 Containers 3
7 4I.1.2.2 Waste Tracking 3
8 4I.1.3 Container Labeling 4
9 4I.1.4 Containment Requirements for Storing Waste 5
10 4I.1.4.1 Secondary Containment System Design 5
11 4I.1.4.2 System Design 5
12 4I.1.4.3 Structural Integrity of the Base 5
13 4I.1.4.4 Containment System Capacity 6
14 4I.1.4.5 Control of Run-On 6
15 4I.1.4.6 Removal of Liquids from Containment System 6
16 4I.1.4.7 Demonstration that Containment is not Required because Containers do not Contain
17 Free Liquids, Wastes that Exhibit Ignitability or Reactivity, or Wastes Designated
18 F020-023, F026 or F027 7
19 4I.1.5 Prevention of Reaction of Ignitable, Reactive, and Incompatible Wastes in Containers 7
20 4I.2 Plant Service Air (PSA) / Instrument Service Air Systems 7
21 4I.3 Plant Cooling Water System (PCW) 8
22 4I.4 Low-Pressure Steam System (LPS) 8
23 4I.5 High-Pressure Steam System (HPS) 8
24 4I.6 Demineralized Water System (DIW) 9
25 4I.7 Process Service Water System (PSW) 9
26 4I.8 Chilled Water (CHW) System 9
27 4I.9 Glass Former Reagent (GFR) System 10
28 4I.10 Cathodic Protection System 10

TABLE

29 Table 4I-1 BOF Container Storage Areas 12

This page intentionally left blank.

4I Balance of Facilities (BOF)

The Balance of Facilities(BOF ~~will provide~~) provides support systems and utilities required for the waste treatment processes within the ~~pretreatment facility,~~ Pretreatment Facility, Low-Activity Waste (LAW ~~vitrification facility,~~) vitrification facility, High-Level Waste (HLW ~~vitrification facility,~~) vitrification facility, Analytical Laboratory (Lab), and ~~analytical laboratory.~~the Effluent Management Facility (EMF). These will include, but ~~will~~ not ~~be~~ limited to, heating and cooling, process steam, process ventilation, chilled water, primary and secondary power supplies, and compressed air. The primary BOF process support ~~facilities are described in Sections 4I.2 through 4I.9. These support and utility systems do not manage dangerous waste and are described below for information only.~~systems are:

- Plant service air (PSA)
- Plant cooling water (PCW)
- Low-pressure steam (LPS)
- High-pressure steam (HPS)
- Demineralized water (DIW)
- Process service water (PSW)
- Chilled water (CHW)
- Glass former reagent (GFR)
- Cathodic protection (CPE)

The BOF systems are described in Sections 4I.1 through 4I.10. The BOF support and utility systems described in sections 4I.2 through 4I.9 will not manage dangerous waste, and are described below for informational purposes only. Section 4I.1 addresses BOF dangerous waste container management areas, and Section 4I.10 addresses the BOF cathodic protection system (CPE). The majority of the of underground piping systems within the CPE system are not dangerous/mixed waste lines, however, a segment of dangerous/mixed waste underground transfer lines between the Pretreatment Facility, and the HLW Vitrification Facility, the LAW Vitrification Facility, and the Lab are cathodically protected. Underground waste transfer lines to support the Direct Feed LAW configuration are isolated from the soil environment with insulation and an HPDE jacket, and are not part of the CPE system.

4I.1 Containers

This section identifies the containers and container management practices that will be followed at the BOF. The term “container” is used as defined in Washington Administrative Code (WAC) 173-303-040). Note that in this appendix and throughout the permit, terms other than containers may be used, such as canisters, boxes, bins, flasks, casks, and overpacks.

The container storage areas ~~(secondary waste)~~ located within the BOF ~~consists of~~ include:

- Nonradioactive dangerous waste storage area
- Failed melter storage facility

Container storage area dimensions at the BOF are summarized in Table 4I-1.

The following sections address waste management containers:

- Description of Containers - Section 4I.1.1
- Container Management Practices - Section 4I.1.2
- Container Labeling - Section 4I.1.3
- Containment Requirements for Storing Waste - Section 4I.1.4

- Prevention of Ignitable, Reactive, and Incompatible Wastes in Containers - Section 4I.1.5

4I.1.1 Description of Containers

~~These~~The types of waste ~~will be~~ managed in containers include:

- Miscellaneous mixed waste (secondary waste)
- Miscellaneous nonradioactive dangerous waste (secondary waste)

The waste form dictates the type of containers used for waste management. The following paragraphs describe these types of containerized waste that are managed at the BOF.

Miscellaneous Mixed Waste

Generally, miscellaneous mixed wastes are secondary wastes that may include, but are not limited to, the following items:

- Spent or failed equipment
- Offgas HEPA filters
- Melter consumables
- Spent melters

Spent equipment and offgas filters will typically be managed in commercially-available containers such as steel drums or steel boxes, of varying size. The containers for miscellaneous mixed waste will comply with transportation requirements, with receiving ~~treatment, storage~~Treatment, Storage, and ~~disposal~~Disposal (TSD) facility waste acceptance criteria, and will be compatible with the miscellaneous mixed waste. These containers may or may not include a liner. Final container selection, container and waste compatibility, and the need for liners, will be based on the physical, chemical, and radiological properties of the waste being managed.

Melter consumables are routinely generated wastes and include spent feed tubes, pressure transducers, bubblers, thermocouples, and discharge risers. LAW melter consumables will be placed into approved disposal containers of varying size.

HLW melter consumables will be remotely size reduced, if necessary, and placed into steel baskets with lids. The baskets will be placed into drums and the drums placed into shielded casks for export from the facility.

The LAW Locally Shielded Melter (LSM) will be classified as hazardous debris for land disposal restrictions purposes. After a spent HLW Melter is deemed to meet criteria and regulations for onsite disposal, it will be placed in a welded carbon steel container (overpack) or other acceptable packaging in accordance with waste acceptance criteria for the receiving TSD facility. ~~Regulatory issues and permitting actions associated with onsite disposal of spent and/or failed melters will be addressed in the future~~The design of the Failed Melter Storage Facility is addressed in interim compliance schedule, DWP Operating Unit Group 10, Appendix 1.0.

Each miscellaneous mixed waste container will have associated documentation that describes the contents, such as waste type, physical and chemical characterization, and radiological characterization. This information will be retained within the plant information network.

Most miscellaneous secondary mixed wastes will be spent equipment and consumables such as pumps, air lances, HEPA filters, etc., and are not expected to contain liquids. If wastes are generated that contain liquids, ~~these wastes~~absorbents may be ~~treated to remove or absorb liquids,~~added in order to comply with the receiving TSD ~~facility~~Facility waste acceptance criteria.

Miscellaneous Nonradioactive Dangerous Waste

Each nonradioactive dangerous waste container will have associated documentation that describes the contents, such as waste type and physical and chemical characterization. ~~Typically, commercially~~Commercially available containers will be used. The types of containers used for packaging nonradioactive dangerous waste will comply with the receiving TSD facility waste acceptance criteria and transportation requirements. However, final container selection, container and waste compatibility, and the need for liners will be based on the physical and chemical properties of the waste being managed.

4I.1.2 Container Management Practices

The following paragraphs describe how ~~each of the~~ containers ~~used at the BOF~~ are managed~~.~~ in the BOF container management areas.

4I.1.2.1 Miscellaneous Mixed Waste and Miscellaneous Nonradioactive Dangerous Waste Containers

Miscellaneous Mixed Waste Containers

Miscellaneous mixed waste (secondary waste) will be managed in~~:~~ the failed melter storage facility. Containers will be kept closed unless waste is being added, removed, or sampled while in the container storage area. Containers stored in this area will be placed on pallets, or otherwise elevated to prevent contact with liquid, if present. Table 4I-1 summarizes the dimensions and maximum capacity of the container storage area. Containers will be managed in the container storage area, and then transferred to a suitable TSD facility.

- ~~Failed melter storage facility (BOF)~~

~~Containers will be kept closed unless waste is being added, removed, or sampled while in the containment storage areas. Containers stored in these areas will be placed on pallets, or otherwise elevated to prevent contact with liquid, if present. Table 4I-1 summarizes the dimensions and maximum capacity of miscellaneous mixed waste storage areas. Containers will be managed in designated areas throughout the BOF, and then transferred to a suitable TSD facility.~~

The failed melter storage facility will be a stand-alone building. It will be used primarily to manage HLW melters that have completed their useful service life. The failed melters storage facility may also receive containerized miscellaneous mixed waste, if needed.

Miscellaneous Nonradioactive Dangerous Waste Containers

Miscellaneous dangerous waste containers will typically be managed in the nonradioactive dangerous waste container storage area, or in non-permitted waste management units (satellite accumulation areas and less-than-90-day storage areas) located throughout the BOF. The nonradioactive dangerous waste container storage area will consist of a concrete pad approximately 25 feet (ft) by 30 ft. The area may include a metal roof or portable storage buildings such as cargo containers or storage lockers. Containers will be kept closed unless waste is being added, removed, or sampled. They will routinely be moved by forklift or drum cart, and will be managed in a manner that prevents ruptures and leaks. The storage capacity for the nonradioactive dangerous waste container storage area is listed in ~~Table 4I-1.~~Table 4I-1. The containers in that area may be stacked two high and aisle spacing will be at least 30 inches (in.) between rows of containers. Containers stored in this area will be placed on pallets, or otherwise elevated to prevent contact with liquid, if present.

4I.1.2.2 Waste Tracking

The plant information network interfaces with the integrated control network and is designed to collect and maintain plant information. The plant information network is currently planned to support the following systems (all systems used at the plants/facilities and BOF are provided for information only):

- Plant data warehouse and reporting system
- Laboratory information management system
- Waste tracking and inventory system

Inventory and Batch Tracking

The waste tracking and inventory system will interface with the information system data historian to provide reporting information such as tank volumes, waste characteristics, and facility inventories of process waste. The waste tracking system will also be used to query operations parameters at any time information is needed, as specified by operations, to manage the process system.

Secondary Waste Stream Tracking

Containerized secondary waste streams and equipment will be tracked and managed through commercially available database management software. Containers will be mapped in each plant and updated during the inspection process using a commercially available drawing software application.

Laboratory Information Management System

The laboratory information management system (LIMS) will be an integral feature of the plant information network. The LIMS will serve as an essential tool for providing data management of regulatory and processing samples. The chosen LIMS will be a commercial off-the-shelf software package designed for performing laboratory information management tasks as described in ASTM E1578-93, *Standard Guide for Laboratory Information Management Systems (LIMS)*.

The LIMS will track the flow of samples through the laboratory. Samples received in the laboratory will be identified with a unique identification label. The identification label provides details of the sample process stream. Baseline analyses are defined by the requesting plant. Additional analyses, as required, will be input into LIMS by laboratory analysts. Data will be input into LIMS manually or by data transfer using LIMS/instrument interface. Analyses will be performed using approved and validated analytical procedures.

Analytical results will be compiled by the LIMS and held pending checking and approval by appropriate staff. Approved results will be reported to the requesting plant.

4I.1.3 Container Labeling

Miscellaneous Mixed Waste Containers

The miscellaneous mixed waste containers will be labeled with the accumulation or generation start date, as appropriate, the major risk(s) associated with the waste, and the words “hazardous waste” or “dangerous waste.” A waste tracking and inventory system will be implemented. Labels and markings will be positioned so that required information is visible. The label will meet the WAC 173-303-630(3) requirements, and the dangerous waste number will be clearly identified. A waste tracking and inventory system will be implemented. Labels and markings will be positioned so that required information is visible, and the dangerous waste number will be clearly identified.

Miscellaneous Dangerous Waste Containers

The miscellaneous dangerous waste drums will be labeled with the accumulation or generation start date, as appropriate, the major risk(s) associated with the waste, and the words “hazardous waste” or “dangerous waste”. A waste tracking and inventory system will be implemented. Labels and markings will be positioned so that required information is visible. The label will meet the WAC 173-303-630(3) requirements, and the dangerous waste number will be clearly identified.

4I.1.4 Containment Requirements for Storing Waste

Secondary containment requirements for the waste are discussed below.

4I.1.4.1 Secondary Containment System Design

Secondary containment is required for areas in which containers hold free liquids. It is also required for areas managing wastes exhibiting the characteristics of ignitability or reactivity as defined in WAC 173-303-090(5) and (7).

Miscellaneous Mixed Waste

Miscellaneous mixed waste storage areas may contain waste requiring secondary containment. If wastes containing liquids or wastes exhibiting the characteristics of ignitability or reactivity are generated, portable secondary containment that meets the requirements of WAC 173-303-630(7) will be provided. The portable secondary containment provided will be capable of collecting and holding spills and leaks. It will have the capacity to contain ten percent of the volume of all containers or the entire volume of the largest container, whichever is greater.

Miscellaneous Dangerous Waste

The nonradioactive dangerous waste storage area may contain waste requiring secondary containment. If wastes containing liquids or wastes exhibiting the characteristics of ignitability or reactivity are generated, portable secondary containment that meets the requirements of WAC 173-303-630(7) will be provided. The portable secondary containment provided will be capable of collecting and holding spills and leaks. It will have the capacity to contain ten percent of the volume of all containers or the entire volume of the largest container, whichever is greater.

4I.1.4.2 System Design

Miscellaneous Mixed Waste

There will be one miscellaneous mixed waste (secondary waste) container storage area at the BOF, as follows:

- Failed melter storage facility

The failed melter storage facility will be used primarily to manage HLW Melters that have completed their useful service life. These units will be received in carbon steel overpack containers allowing limited hands-on contact. These overpacks will not be opened while the waste melters are located in this storage facility. The facility is capable of storing up to three waste melters at any given time. The spent HLW Melters will not be stacked.

The failed melter storage facility may also receive containerized miscellaneous mixed waste, if needed. These waste containers will be sealed prior to transport to the failed melter storage facility. The containers will not be opened while at this storage facility. The waste containers will not be stacked more than two containers high. The failed melter storage facility will be a stand-alone building located in the southern portion of the WTP.

Miscellaneous Dangerous Waste

Waste containing liquid may be present in the nonradioactive dangerous waste storage area. Containers with liquids will be provided with portable secondary containment meeting the requirements of WAC 173-303-630(7).

4I.1.4.3 Structural Integrity of the Base

The storage areas will be constructed to support storage and transportation of containers within the container storage areas and will be designed with the following:

- Containment system capable of collecting and holding spills and leaks.
- Base will be free of cracks and gaps and sufficiently impervious to contain leaks.
- Positive drainage control.
- Sufficient containment volume.
- Sloped to drain or remove liquid, as necessary.

4I.1.4.4 Containment System Capacity

Miscellaneous Mixed Waste

Each container holding liquid dangerous waste will be placed into portable secondary containment that meets the requirements of WAC 173-303-630(7). The waste container will function as the primary containment while the portable containment device will function as the secondary containment.

Each portable secondary containment will have the capacity to contain 10% of the volume of all containers within the containment area, or the volume of the largest container, whichever is greater.

Miscellaneous Dangerous Waste

Waste containing liquid may be present in the nonradioactive dangerous waste container storage area. Each container holding liquid nonradioactive dangerous waste will be placed into portable secondary containment. The waste container will function as the primary containment while the portable ~~sump~~secondary containment device will function as the secondary containment.

Each portable secondary containment will have the capacity to contain 10% of the volume of all containers within the containment area, or the volume of the largest container, whichever is greater. Typically, the waste containers will be steel drums.

4I.1.4.5 Control of Run-On

Miscellaneous Mixed Waste

Run-on will not reach the interior of the BOF miscellaneous mixed waste storage areas, because ~~they~~the storage areas will be located within buildings~~, which will have~~ provided with roof gutters to remove precipitation.

Miscellaneous Dangerous Waste

Run-on will not reach the interior of the nonradioactive dangerous waste container storage area, because waste will be managed in buildings with walls and roof to remove precipitation.

4I.1.4.6 Removal of Liquids from Containment System

Miscellaneous Mixed Waste

Portable secondary containment ~~sumps~~devices will be provided for individual containers that contain liquids. Hand pumps or similar devices will be used to remove liquid released to the portable secondary containments.

Miscellaneous Dangerous Waste

Portable secondary containment ~~sumps~~devices will be provided for individual containers that contain liquids. Hand pumps or similar devices will be used to remove liquid released to the portable secondary containments.

4I.1.4.7 Demonstration that Containment is not Required because Containers do not Contain Free Liquids, Wastes that Exhibit Ignitability or Reactivity, or Wastes Designated F020-023, F026 or F027

Miscellaneous Mixed Waste

Secondary containment will be provided for individual containers that manage liquids. Wastes with the F020-F023, F026, and F027 numbers are not identified for the double shell tank (DST) system. Therefore, these waste numbers will not be present at the BOF.

Miscellaneous Dangerous Waste

The nonradioactive dangerous waste container storage area may manage liquids and D001 and D003 waste; therefore, secondary containment will be provided. Wastes with the F020-F023, F026, and F027 numbers are not identified for the DST system. Therefore, these waste numbers will not be present at the BOF.

4I.1.5 Prevention of Reaction of Ignitable, Reactive, and Incompatible Wastes in Containers

~~The requirements of this section are not applicable to the spent melters.~~

~~Ignitable, Reactive, or Incompatible Miscellaneous Mixed Waste and Miscellaneous Dangerous Waste~~

Potentially incompatible wastes are not expected to be managed in the ~~miscellaneous mixed waste storage areas, except for the nonradioactive dangerous waste~~BOF container storage ~~area.~~ areas. If such wastes are managed in ~~this area~~ these areas, the containers of incompatible ~~waste~~wastes or chemicals will not be stored in close proximity to each other. Acids and bases will be stored on separate portable secondary containment ~~sumps~~devices; oxidizers will be stored in areas separate from combustible materials; and corrosive chemicals will be stored on a separate portable secondary containment ~~sump~~devices. These separate storage areas within the unit will be clearly marked with signs indicating the appropriate waste to be stored in each area. Potentially incompatible waste will be stored at least one aisle width apart.

4I.2 Plant Service Air (PSA) / Instrument Service Air Systems

The BOF plant service air (PSA) system will provide a continuous supply of clean, dry air for the process systems in the pretreatment facility, ~~analytical laboratory~~Lab, LAW vitrification facility, EMF, and HLW vitrification facility. Each facility will maintain a reservoir of PSA to accommodate load fluctuations and distributes the compressed air to the designated end users. The air distributed from the BOF PSA system to each facility is the source of the PSA and the Instrument Service Air (ISA) within each facility. ~~The pretreatment facility PSA/ISA system is the source of back-up PSA and ISA for certain applications at the PTF and HLW facilities when normal BOF PSA supply is not available.~~

The PSA system components will consist of compressors, dryers, air receiver vessels, distribution piping, pressure control stations, air amplifiers, valves, vents, drains, utility racks, filters and monitoring instruments.

The ISA system is a distribution piping network that will reduce and control downstream air pressure and supplies compressed air to designated equipment, instruments, and other end users located throughout the facility. It will maintain a reservoir of compressed air received from the BOF PSA system and in doing so, dampen pressure fluctuations caused by variations in the supplied airflow or in end-user demands. In addition, the Pretreatment facility and LAW vitrification facility are designed to use ISA stored air as a short-term supply of backup air in the event that services from the BOF PSA are interrupted.

The air supplied by PSA and ISA systems within each facility supports operation of tanks and miscellaneous unit systems, instruments and ancillary equipment.

4I.3 Plant Cooling Water System (PCW)

The BOF plant cooling water system (PCW) ~~provides~~system will provide a continuous supply of cooling water to selected plant equipment for heat removal. The BOF PCW ~~system supplies~~will receive potable make-up water from the domestic water system (DOW) at the cooling tower. A backup source will be provided from the raw water system (RWW). The PCW system will supply cooling water to the ~~air and~~ chiller ~~compressors~~/compressor plant, steam plant and process areas. The system will remove heat from active process equipment and cooling coils in process buildings and conducts this heat to the atmosphere or local environment through evaporation at the cooling tower. In ~~PTF~~the Pretreatment facility, the PCW is used in the waste feed evaporation process (FEP), treated LAW evaporation process (TLP), cesium nitric acid recovery process (CNP), and pretreatment vessel vent process (PVP) systems.

Cooling water for the HLW ~~facility~~vitrification facility supports the HLW ~~concentrate receipt process (HCP), HLW~~ melter feed process (HFP), HLW melter process (HMP), ~~and the~~ HLW melter offgas treatment system (HOP~~).~~), and melter power supplies. For the LAW ~~facility~~vitrification facility, the major user is the LAW melter process system (LMP~~).~~), pour cave cooling panels, and LAW melter power supplies.

The BOF PCW system will include, but is not limited to, the cooling tower, cooling tower basin, the primary cooling water circulation pumps, filter pumps, chemical injection tanks, and associated piping. The cooling water system is designed with primary and secondary loops to remain uncontaminated by mixed waste constituents. The primary loop circulates cooling ~~water~~waste through heat exchangers within the HLW vitrification facility, LAW vitrification facility, and ~~pretreatment facilities~~Pretreatment facility and through equipment in the BOF chiller compressor plant. The system also provides cooling water to quench the steam plant blow down. The HLW vitrification facility, LAW vitrification facility and ~~pretreatment facilities~~Pretreatment facility will also have closed secondary loops that distribute cooling water to process equipment. Cooling water will be chemically treated to promote system operability and service life of 40 years.

4I.4 Low-Pressure Steam System (LPS)

~~This~~The low-pressure steam system (LPS) will provide a continuous supply of low-pressure steam for various users in the pretreatment facility, Lab, LAW ~~vitrification facility~~vitrification facility, EMF, and HLW ~~vitrification facility~~vitrification facility. The process facilities main use of steam will be for tank heating for the evaporation process, and for HVAC heating coils.

The low-pressure steam system will be supplied from the high-pressure steam system through pressure-reducing stations. The low pressure applications will consist of air handling units, humidifiers, and booster heaters. The steam condensate and feed system will collect condensate from the low-pressure steam users, monitor for mixed waste contamination, and return it to the steam plant for re-use.

4I.5 High-Pressure Steam System (HPS)

The high-pressure steam system (HPS) will provide a continuous supply of high-pressure steam ~~for ejectors used for fluid transfers, and hot water heaters in the pretreatment, LAW~~to the Pretreatment facility, Lab, LAW vitrification facility, EMF, and HLW vitrification facility. ~~facilities.~~ The high pressure saturated steam is generated in the BOF steam plant facility ~~(SPF) houses the boilers that produce the steam~~, which consists of six fire tube boiler packages (five continuously operating at peak conditions, and one in standby), and associated supporting equipment. The HPS distributes steam through above ground piping to process equipment, ejectors for transfer of fluids, and hot water heaters in the Pretreatment Facility, Lab, LAW Vitrification Facility, EMF, and HLW Vitrification Facility.

4I.6 Demineralized Water System (DIW)

~~This~~ The demineralized water system ~~treats~~(DIW) will treat process service water ~~to~~, and produce, store and distribute ~~demineralized water~~ the treated water through an underground piping distribution system to users in ~~pretreatment, HLW, LAW~~BOF, Pretreatment facility, Lab, ~~and BOF facilities.~~LAW vitrification facility, EMF, and HLW vitrification facility. Demineralized water ~~is~~will be produced in the BOF water treatment building by pumping process service water through ~~5-micron, 2-micron and 1-micron~~ a series of cartridge filters~~. Water is further treated by one of two~~ and reverse osmosis units. ~~Demineralized~~The treated water ~~is~~will be stored in the BOF demineralized storage tank. ~~Prior to distribution to process facilities, demineralized water is treated using~~Demineralized water will be pumped from the storage tank through an ultraviolet ~~(UV)~~ sterilization ~~and an additional 2-micron~~system to decontaminate biological organisms then sent through a final cartridge filter~~.~~ before it is fed into the distribution system.

~~The primary systems that utilize demineralized water include:~~

- ~~Fresh ion exchange resin addition~~
- ~~Chemical reagent makeup~~
- ~~Wet electrostatic precipitator misting~~
- ~~Wash rings~~
- ~~Decontamination~~
- ~~Melters~~
- ~~Analytical laboratory~~
- ~~Process and transfer piping and tank system flushes~~
- ~~Boiler make-up~~

Demineralized water will primarily be used for boiler makeup, chemical reagent makeup, equipment decontamination, process pipeline flushes, sampling pipeline flushes, vessel and bulge rinses, pump priming, Wet Electrostatic Precipitator misting, and instrumentation rinses.

4I.7 Process Service Water System (PSW)

~~This~~The process service water system (PSW) will ~~supply~~provide filtered water for operations and maintenance purposes. The water will be stored and distributed to the Pretreatment facility, LAW vitrification facility, EMF, HLW vitrification facility and Lab. The system will consist of two storage tanks, filters, pumps, and distribution piping and supply filtered water to end users~~. This water will serve processes~~ for various systems, such as offgas treatment, plant wash ~~systems~~, and make-up to chilled water ~~systems. The BOF process service water system receives~~. The PSW will receive water directly from the Hanford site domestic (potable) water system (DOW). ~~The water is stored and distributed to the pretreatment, LAW, HLW, and Lab facilities,~~Equipment for the ~~chiller compressor plant (CCP),~~PSW is located in the ~~demineralized water system (DIW), and~~ water treatment building ~~(WTB).~~, except for the tanks, which are located outside.

4I.8 Chilled Water (CHW) System

~~This closed-loop~~ The chilled water (CHW) system will ~~supply chilled~~supply chilled water to ~~various HVAC unit cooling coils and plant~~selected equipment ~~coolers for~~in the ~~WTP. Chilled water~~HLW vitrification facility, EMF, Lab, LAW vitrification facility, and Pretreatment facility. The CHW system will consist of chillers, fixed-speed distribution pumps, adjustable-speed drive booster pumps, an expansion vessel, a chemical feed vessel, an air separator, piping, valves, in-line components, instruments, and controls.

Each of these facilities will be ~~used in various systems throughout~~equipped with a secondary CHW loop that draws from the ~~WTP.~~ primary distribution. The HLW vitrification facility, Lab, EMF, and LAW vitrification facility secondary loops will supply water to air handling units, fan coil units, in-bleed

cooling coils, and breathing service air system compressors. Both the LAW vitrification facility and Pretreatment facility secondary loops will supply water to heat exchangers used by the process cooling loops.

The chilled water system is designed to remain uncontaminated by mixed waste constituents. ~~The~~The process cooling loops are closed loops systems and do not share circulating water with the secondary or primary loops. The process cooling loops in the LAW vitrification facility and Pretreatment facility are used for cooling both process vessel cooling coils and process vessel cooling jackets. Secondary chilled water ~~will be chemically treated to promote system operability and provide a service life of 40 years.~~returns from the HLW vitrification facility, Lab, LAW vitrification facility, EMF, and Pretreatment facility and cascades through the PSA dryer coolers before it is cooled and once again returns to the end users.

The CHW system primary and secondary loops, as well as the LAW and PTF CHW process cooling loops, will receive corrosion inhibitors and pH adjustment chemicals, as needed, to limit deterioration of the materials that are in contact with the cooling medium and the fouling of heat transfer surfaces.

4I.9 Glass Former Reagent (GFR) System

The glass former reagent system ~~provides~~(GFR) will provide glass former reagents and sucrose to the LAW Vitrification Facility and HLW ~~vitrification facilities.~~Vitrification Facility. The system will also ~~provides~~provide silica to the LAW container finishing handling system (LFH) for inert void fill for ILAW containers. Sucrose may also be mixed with the glass formers and added to the radioactive waste to enhance melter performance. The GFR system is comprised of the equipment needed to receive, store, blend and transport glass formers to the ~~vitrification facilities.~~LAW Vitrification Facility and HLW Vitrification Facility. The GFR system includes the glass former handling equipment in BOF, the glass former mixers located in HLW vitrification facility and LAW ~~facilities~~ vitrification facility and the inert fill ~~day~~ hoppers in the LAW vitrification facility. The LAW vitrification facility and HLW vitrification facility portions of the GFR system are described in WTP DWP Permit Sections 4E.2.1 and 4F.2.1, respectively.

4I.10 Cathodic Protection System

An impressed current cathodic protection system will be used for eliminating or mitigating corrosion on interplant underground piping as well as the interior surfaces and bottoms of most field erected tanks. The cathodic protection system will maintain a negative polarized potential between the protected pipe or tank and a saturated copper/copper sulfide reference electrode. The impressed current cathodic protection system will use direct current provided by a rectifier that is powered from the plant's normal 480 VAC power system. The direct current from the rectifier will be connected across the buried anode wire and the protected pipe or tank bottom. The current flows from the anode wire, which is positive, through the electrolyte, to the protected surface, which is negative, and back to the rectifier completing the electrical circuit.

BOF non-dangerous/mixed waste containing pipelines and equipment that will be cathodically protected include:

- Plant service air main headers
- Diesel fuel oil pipelines (between the diesel fuel oil tank and the steam plant facility)
- Anhydrous ammonia reagent pipeline
- PSA-ITS compressed air pipeline
- Metallic piping and fittings that are within the zone of influence of the cathodic protection system.

BOF non-dangerous/mixed waste field erected tanks that are cathodically protected include:

- Fuel oil tank
- Domestic water tank
- Demineralized water tank
- Process service water feed tank
- Process service water supply tank
- Non-rad effluent tank
- Fire water tanks

Additionally, various underground waste transfer pipelines that manage mixed waste are cathodically protected. Underground mixed waste transfer pipelines within WTP that will be cathodically protected include:

- Transfer lines between the Pretreatment Facility and the HLW Vitrification Facility
- Transfer lines between the Pretreatment Facility and the LAW Vitrification Facility
- Transfer lines between the Analytical Laboratory and the Pretreatment Facility

The underground waste transfer lines installed to support the Direct Feed LAW (DFLAW) configuration are coaxial lines that are constructed of stainless steel primary pipe, with a carbon steel encasement pipe that is coated with fusion bonded epoxy (FBE). The coating system and water barrier consist of the FBE, polyurethane insulation, and a jacket or thermoplastic outer water barrier made of high density polyethylene (HDPE). Cathodic protection is not needed for the underground waste transfer lines installed to support the DFLAW configuration as the pipe system is made of corrosion resistant materials, providing water resistant construction. Additional information on the cathodic protection system for the underground waste transfer lines that manage mixed waste for all facilities can be found in Chapter 4 Process Information.

Table 4I-1 BOF Container Storage Areas		
Container Storage Area	**Maximum Waste Volume (US Gallons) [1]**	**Approximate Dimensions (L × W × H, in feet) [2]**
~~**Other Areas**~~		
1. Nonradioactive Dangerous Waste Container Storage Area (located on the Part A Figures)	56,104	25’ × 30’ × 10’
2. Failed Melter Storage Facility (located on the Part A Figures)	403,947	75’ × 45’ × 16’

[1] The conversion factor used to convert from cubic feet to gallons is 7.4805 gal/ft^3.

[2] The dimension for height (H) is based on the height of the largest waste container stored in the area (i.e., LAW container is 7.5 ft, HLW canister is 15 ft, melters are assumed to be 16 ft, and a B-25 box is 5 ft - stacked a maximum of two high is 10 ft).

Chapter 6.0

Procedures to Prevent Hazards

This page intentionally left blank.

Chapter 6.0
PROCEDURES TO PREVENT HAZARDS

Contents

6.0 INTRODUCTION
.....1

6.1 Security 1
6.1.1 Security Procedures and Equipment 1
6.1.2 Warning Signs.....2
6.1.3 Surveillance and/or Barriers 2
6.1.4 Waiver.....2

6.2 Preparedness and Prevention Requirements 9
6.2.1 Equipment Requirements.....9
6.2.1.1 Internal Communications.....9
6.2.1.2 External Communications.....9
6.2.1.3 Emergency Equipment.....10
6.2.1.4 Water for Fire Control 10

6.3 Aisle Space Requirement.....10

6.4 Preventive Procedures, Structures, and Equipment 11
6.4.1 Unloading/Loading Operations.....11
6.4.2 Runoff 11
6.4.3 Contamination of Water Supplies.....12
6.4.4 Equipment and Power Failures 12
6.4.5 Personal Protection Equipment.....13
6.4.6 Prevent Releases to the Atmosphere 13

6.5 Prevention of Reaction of Ignitable, Reactive, and/or Incompatible Waste 14

Acronyms

DST	double-shell tank
EMF	Effluent Management Facility
FM	Factory Mutual
IHLW	immobilized high-level waste
ILAW	immobilized low-activity waste
NFPA	National Fire Protection Association
TSD	treatment, storage, or disposal
WTP	Waste Treatment and Immobilization Plant

This page intentionally left blank.

CHAPTER 6.0: PROCEDURES TO PREVENT HAZARDS

6.0 INTRODUCTION

This chapter addresses hazard prevention at the River Protection Project – Waste Treatment and Immobilization Plant (WTP). It covers the following topics: security; preparedness and prevention requirements; preventive procedures, structures, and equipment; and prevention of reaction of the ignitable, reactive, and incompatible waste at the WTP. Information is presented in two formats: narrative and table. The Inspection Plan can be found in Appendix 6A.

Information is presented in two formats: narrative and table. See Appendix 6A for example inspection tables.

6.1 6.1 Security

This section describes WTP security procedures and equipment. Hanford Site security measures are discussed in the *Hanford Facility Dangerous Waste Permit Application, General Information Portion (DOE-RL 1998).*

6.1.1 6.1.1 Security Procedures and Equipment

The following sections describe the barrier and warning signs that support security and control access to the WTP.

6.1.1.1 24-Hour Surveillance System

The entire Hanford Site is a controlled-access area. For surveillance information of the Hanford Site, refer to the Site-wide Permit.

6.1.1.2 Barrier and Means to Control Entry

The WTP will use two fences, one around the facility's perimeter, and a second inner fence that controls access to dangerous waste management areas. The inner fence will be of sufficient height and construction to prevent people, livestock, and wildlife accidental access to the WTP. Vehicle access to the WTP administration building will be through a normally open gate in the perimeter fence. Visitors must check in at the administration building and will be escorted as required.

WTP personnel entry to the process areas will be through a controlled pedestrian gate. Service vehicles delivering supplies will enter process areas through a controlled gate. See the topographic map in Chapter 2.0 for further information regarding barriers and vehicular access.

6.1.1.3 The following sections describe the procedures and equipment used to prevent the unknowing entry, and to minimize the possibility for unauthorized entry into the WTP. Security methods include barriers, entry control through facility entrances and warning signs that support security and control access to the WTP.

6.1.2 Warning Signs

Warning signs, written in English, stating, "DANGER - UNAUTHORIZED PERSONNEL KEEP OUT~~" (or an equivalent legend),"~~, are provided in sufficient numbers to be seen from areas that contain dangerous or mixed waste, are legible from a distance of at least 25 feet, and visible from any angle of approach to the WTP. These warning signs will be posted ~~in~~at the following locations ~~such as~~:

- ~~Around the perimeter of the WTP fenced areas~~
- ~~On each entrance, gate, and other access points to portions~~active portion of the WTP ~~facility actively managing dangerous waste~~ facilities
- On entrances and exits to ~~other~~ enclosed ~~areas within the plant that contain~~buildings (i.e., LAW) where dangerous or mixed waste is actively managed.

~~Points of access into waste handling and storage areas will have clearly marked warnings for radiation exposure and the major health risks associated with the waste. Access points into these areas will be strictly controlled. In addition, signs~~Signs will be posted at the main site access entrance, instructing visitors to report to the WTP administration building to gain access to the WTP (WAC 173-303-310 (2~~) ()~~(a)).

~~6.1.2 Waiver~~

Sign posting locations will be added to the WTP permit prior to managing any dangerous or mixed waste.

6.1.3 Surveillance and/or Barriers

The entire Hanford Site is a controlled-access area. For continuous surveillance information of the Hanford Site, refer to the Site-wide Permit. At the WTP facility, independent security contractors perform 24/7 guard coverage. The security force is responsible for controlling entry into the WTP facility via two access gates. In addition, the security force will perform random vehicle inspections, routine facility patrols and will be responsible for issuing visitor badges. Visitors must check in at the administration building located next to the main entry gate and will be escorted as required. Refer to Chapter 2.0 for information about the WTP fencing and control access gates.

The WTP facility uses two fences, one around the facility's perimeter and a second inner fence that control access to dangerous waste management areas. The perimeter and inner fences are approximately 7-foot-high and made of chain link.

6.1.4 Waiver

No waivers of the security procedures and equipment requirements for the WTP are requested.

6.2 INSPECTION PLAN

The following sections describe the WTP dangerous waste inspection plan. The WTP will use a graded approach to preventing and detecting malfunctions, deterioration, operator errors, and discharges that will range from daily inspections to integrity assessments. This graded approach is comprised of activities that, at a minimum, will meet the inspection requirements and will include more precautions for equipment at higher risk of failure. Monitoring via instrumentation will be used to perform remote inspections in areas of high radioactivity, including, but not limited to, the Pretreatment areas, the LAW vitrification area, and the HLW vitrification area. Due to the radioactive nature of the waste and consistent with ALARA principles, monitoring by instrumentation will be the primary means of fulfilling the inspection requirements in these areas. The WTP will also use cameras, windows, process control, function checks, and preventive maintenance to comply with inspection requirements.

Example inspection schedules, which are part of the inspection plan, are presented as tables in Appendix 6A. Each table addresses a particular dangerous waste management unit, or group of units, such as tanks. Within each management unit table, the inspections are presented by system, and are further broken down by individual component in each system.

6.2.1 General Inspection Requirements

This section describes general, WTP-wide inspection requirements used to help prevent, detect, or respond to environmental or human health hazards related to dangerous waste handling, treatment, and storage at the WTP. The inspection schedules are provided in Table 6A-1.

Instruments, such as those used for overfill detection; will be connected to the Process Control System (PCJ). The PCJ will be the computer system that continuously monitors the instruments' data. Should the PCJ detect a reading outside the range of acceptable operation, control personnel will be alerted (in real time) by alarm in the control room. The monitoring system will provide trending of selected monitoring data, graphics, and equipment summary displays. The WTP will use a maintenance management system to plan and track preventive maintenance activities and function testing at the WTP. Other methods of performing inspections at the WTP will be visual where safe and effective to do so.

6.2.1.1 Items to be Inspected

The WTP inspection plan will include specific inspection schedules that meet the requirements. In Appendix 6A are example inspection schedules of the types of items to be inspected. The following are listed in the inspection schedule tables:

- General inspections for safety and emergency equipment, security, and preparedness and prevention
- Tank systems
- Container storage areas
- Miscellaneous units
- Containment building areas

6.2.1.2 Types of Problems to Look for During Inspections

The example inspection tables in Appendix 6A include a column titled "inspections". This column specifies the type of inspection activities to be performed (such as verifying the operability of equipment and problems to look for) for each inspected item.

6.2.1.3 Frequency of Inspections

In the example inspection tables in Appendix 6A, the column titled "frequency" provides the frequency of inspection for each item. Inspection frequencies were developed using a graded approach that will be finalized prior to the start of operations, and are based on the following:

- Regulatory requirements where specified
- Rate of possible deterioration of equipment
- Probability of a release to the environment
- Potential to cause harm to human health and the environment
- Manufacturer's specifications
- Integrity assessments of tank systems
- Operating experience and knowledge

6.2.1.4 Schedule Location

Controlled copies of the inspection plan will be kept at the WTP facility. The project document control manager, or equivalent, will be responsible for ensuring that controlled copies of the inspection plan are kept current when revisions to the inspection plan are made.

6.2.1.5 Employee Positions Responsible for Conducting Inspections

Personnel performing dangerous waste inspections will have the appropriate facility-specific training as required by the *Personnel Training Plan* (Chapter 8.0) and as defined in the *Waste Treatment Plant Dangerous Waste Training Plan*. The training program will identify the individuals qualified to perform dangerous waste-related inspections.

6.2.2 Inspection Log

Hand written records of inspections (the inspection log) will include the date and time of inspection; the legible, printed name and hand written signature of the inspector; a notation of the observations made; and an account of spills or discharges. Most of the daily inspections will be recorded as part of the process control data recording system and will therefore be fully retrievable and auditable. Repairs, and remedial or corrective actions needed, will become part of the WTP's corrective action system and the date and nature of repairs or remedial actions taken will be recorded in the inspection log. The inspection log will be stored in the WTP operating record for at least 5 years from the date of inspection.

Electronic media and hard copy media may be used for recording inspections at the WTP. Electronic media will be used where it is sensible, cost-effective, and/or consistent with ALARA practices. Inspection records will be readily retrievable. Dangerous waste inspection requirements will be incorporated into the operating procedures and documentation. The

procedures and operating requirements that satisfy compliance with WAC 173-303 (including inspection requirements) will be identified so that they are distinguishable within the larger universe of facility operational requirements.

6.2.3 Schedule for Remedial Action for Problems Revealed

Remedial action will be taken as soon as practicable by facility management to implement the *Waste Treatment Plant Emergency Response Plan* (ERP) (Chapter 7.0) if an inspection identifies an unplanned spill, release, fire, or explosion, unplanned spill or release involving a dangerous waste, or an imminent hazard to human health or the environment.

An investigation will begin within 24 hours upon detection of unplanned release in the plant. Depending upon the scope of the hazard, volume of the release, or the characterization of the release, cleanup may be completed within 24 hours, or as soon as practicable, after completion of the initial investigation period. However, the time required to cleanup the release will depend on factors such as analytical turnaround time, radioactivity, and volume.

When inspections reveal problems that do not present an immediate threat to human health or the environment, nor result in a release of hazardous material (cracks in secondary containment coatings, nonfunctioning instrumentation, and labeling errors or omissions), such inspection findings will be logged and response actions scheduled and tracked within 24 hours as corrective actions. The following steps are used, in general, to resolve corrective actions:

- Problem identification and documentation
- Classification
- Cause analysis
- Corrective action
- Follow-up investigation

Non-emergency corrective actions will be completed within 24 hours if possible; however, additional response time may be required because of the radioactive component of the waste being managed at the WTP.

The precise title of the personnel that will be responsible for authorizing such corrective actions has not been decided; however, the position will be one equivalent to a shift operations manager.

6.2.4 Specific Process or Waste Type Inspection Requirements

The following sections describe specific process inspection requirements.

6.2.4.1 Container Inspections

The WTP will store immobilized low-activity waste (ILAW) in containers, immobilized high-level waste (IHLW) in canisters, and secondary dangerous and mixed waste in containers. For purposes of IHLW, the term canisters is used to specifically address the unique disposal requirements of the filled containers. Throughout this section, general references to containers

apply to the IHLW canisters. Secondary waste refers to newly generated waste (or a waste by-product from treating the Hanford tank waste) that is designated as dangerous waste or mixed waste. Secondary waste also will be generated by laboratory activities, from maintenance waste, and failed contaminated equipment. The location and design description of the containers and their associated storage areas are included in Chapter 4.0. Inspections of container storage areas will be performed weekly when waste is in the storage areas. Table 6A-2 provides examples of container and container storage area inspection schedules for ILAW, IHLW, and secondary waste.

Immobilized Low-Activity Containers and High-Level Waste Canisters

Filled ILAW containers and IHLW canisters will be radioactive and thus, inspections must be performed remotely. Therefore, in lieu of conventional container inspections while the containers are in storage, each container will be inspected before and after filling, and when it is moved into and out of the ILAW and IHLW containment buildings or container storage areas. The containers will not contain free liquids, will be chemically and physically stable (not ignitable or reactive), and will have either a welded closure (IHLW) or pressed fitted closure seal (ILAW). The IHLW canisters will be placed in special racks inside the storage areas that will prevent them from toppling. The immobilized waste containers and storage areas are described in Chapter 4.0.

The WTP will inspect the ILAW and IHLW container storage or containment building areas, when they are in use, weekly by remote means. These remotely managed process storage areas do not include thirty-inch aisle spacing. The example inspection schedules (Appendix 6A) specify the problems for which to look and how inspections are performed.

The dangerous waste container labeling requirements will be met by using a unique alphanumeric identifier that will be welded to each container. Deterioration of the identifier is not expected due to the permanent nature of these markings and provisions for subsequent handling that will safeguard against damage to the containers and the identifying marks.

Using the identification on each container, a tracking system will record key movements of each immobilized waste container through the facility. Information about the waste canister tracking system is in Chapter 4.0. For each container of ILAW and IHLW produced, the system will track the following:

- The location of each container in process and storage areas
- The date that waste was first placed in the container
- The date the container was shipped from the facility, and its destination
- The nature of waste in the container, including dangerous waste designation codes, and land disposal restriction requirements

Secondary and Miscellaneous Waste in Containers

Example inspection schedules for secondary dangerous waste and mixed waste container storage areas are given in Table 6A-2.

6.2.4.2 Tank Systems Inspections and Corrective Actions

A description of the tank systems, and their safety and interlock controls, at the WTP can be found in Addendum C. Examples of tank system inspections, inspection frequencies, and problems to look for are given in Table 6A-3. Following is a brief discussion of the tank system inspections.

Inspection procedures and the complete inspection schedule will be available at the WTP prior to starting operation. Each tank, or grouping of identical tanks, is shown as a line item in the inspection schedule tables. Each inspection item includes a description of problems to look for, and the frequency of inspection.

Cathodic Protection

Cathodic protection systems will be used to prevent or mitigate metal corrosion on underground dangerous waste transfer lines where the outermost pipes are in contact with the soil. The cathodic protection systems are described in Addendum C. Example inspection schedules for cathodic protection systems and sources of impressed current are in Table 6A-4.

Tank Integrity Assessments

A periodic integrity assessment approach will be developed for the WTP waste tanks to ensure that the tanks' systems remain fit-for-use. The schedule for performing periodic integrity assessments will be developed during the new tank design assessment placed in Appendix 7.15.

6.2.4.3 Tank Systems – Corrective Actions

Operating procedures describing corrective actions will be developed prior to operations.

6.2.4.4 Storage of Ignitable or Reactive Wastes]

Dangerous waste codes assigned to the waste in the *Double-Shell Tank System Dangerous Waste Part A* Permit Application (DOE-RL 1996) apply to the waste feed the WTP will receive. The waste feed will include the waste codes for ignitability (D001) and reactivity (D003), but the waste is not expected to exhibit the characteristics listed in WAC 173-303-090 for these two waste codes. Based on past process knowledge that includes the age, temperature, history, and chemical composition of the waste feed stored in the DST system, the waste codes D001 and D003 will be removed by the WTP. See the Waste Analysis Plan (Appendix 3A) for specific information on the waste codes and their removal.

Consequently, only the waste feed receipt tanks will be inspected for tanks storing ignitable and reactive waste. The remainder of the process tanks will not contain ignitable or reactive waste. Ignitable or reactive secondary waste may be stored in tanks or containers at the WTP. Annual inspections of all areas managing D001 and D003 waste will be conducted by personnel familiar with the Uniform Fire Code, or in the presence of the local, state, or federal fire marshal. Inspections will be entered into the WTP operating record and maintained at the WTP for 5 years (see Table 6A-5 for the inspection schedule for ignitable or reactive wastes).

6.2.4.5 Air Emissions Control and Detection - Inspections, Monitoring, and Corrective Actions

Air Emissions from Process Vents (Subpart AA)
The WTP does not use any of the regulated devices or processes listed; therefore, the WTP will not be subject to regulation under Subpart AA (40 CFR 264).

Air Emission Standards for Equipment Leaks (Subpart BB)
WAC 173-303-691 and Subpart BB (40 CFR 264) applies to equipment that contains or contacts hazardous wastes with organic concentrations of at least 10 percent by weight. This provision will not apply to the facility because the WTP will not accept or treat wastes with organic concentrations at or above 10 percent by weight. Compliance with this provision will be documented through analyses of verification samples, as described in the Waste Analysis Plan.

Air Emission Standards for **Tanks**, Impoundments, and Containers (Subpart CC)
The regulations specified under WAC 173-303-692 and 40 CFR Part 264 Subpart CC, incorporated by reference, do not apply to the WTP mixed waste tank systems and containers. These tanks and containers qualify as waste management units that are "used solely for the management of radioactive dangerous waste in accordance with all applicable regulations under the authority of the Atomic Energy Act and the Nuclear Waste Policy Act" and are excluded under WAC 173-303-692(1)(b)(vi). Containers or tanks bearing nonradioactive, dangerous waste, such as maintenance and laboratory waste, that are not excluded under WAC 173-303-692(1)(b)(ii) or 40 CFR 264.1082(c), will comply with the container and tank standards specified under 40 CFR part 264 Subpart CC.

6.2.4.6 Miscellaneous Unit Inspections

The WTP melters are miscellaneous units under WAC 173-303-680. Remote inspections and monitoring will be performed by instrumentation that will be supplemented by camera(s) and viewing through shielded windows because of the high levels of radiation in process areas. Other miscellaneous units will be visually or remotely inspected based on accessibility. Inspections will verify the integrity of melter equipment and detect malfunctions, deterioration, leaks, or operator errors that have the potential to release dangerous waste into the facility or the environment. An example miscellaneous unit inspection schedule is provided in Table 6A-6.

6.2.4.7 Containment Building Inspection

Containment buildings will be inspected for items listed in Table 6A-7. The WTP containment building example inspection schedules include the requirements from 40 CFR 264 Subpart DD. Example inspection schedules for tank systems and miscellaneous units located within containment buildings are in Tables 6A-3 and Table 6A-7.

6.2.4.8 Waste Pile Inspection

Operation of the WTP does not involve the placement of mixed waste in piles. Therefore, this section is not applicable to the WTP.

~~**6.2.4.9 Surface Impoundment Inspection**~~

~~Operation of the WTP does not involve the placement of mixed waste in a surface impoundment. Therefore, this section is not applicable to the WTP.~~

~~**6.2.4.10 Incinerator Inspection**~~

~~Operation of the WTP does not involve using a waste incinerator. Therefore, this section is not applicable to the WTP.~~

~~**6.2.4.11 Landfill Inspection**~~

~~Operation of the WTP does not involve the placement of mixed waste in a landfill. Therefore, this section is not applicable to the WTP.~~

~~**6.2.4.12 Land Treatment Facility Inspection**~~

~~Operation of the WTP does not involve the land treatment of mixed waste. Therefore, this section is not applicable to the WTP.~~

6.2 ~~6.3~~ Preparedness and Prevention Requirements

~~The following sections document~~This section describes the preparedness and prevention measures ~~to be taken at~~employed by the WTP~~.~~ to avoid or mitigate the possibility of a fire, explosion, or any unplanned sudden release of dangerous waste or dangerous waste constituents to air, soil, or surface water that could threaten human health or the environment.

6.2.1 ~~6.3.1~~ Equipment Requirements

The following sections describe internal and external communications, and emergency equipment required and located at WTP.

6.2.1.1 ~~6.3.1.1~~ Internal Communications

The onsite communication system at the WTP provides immediate emergency information to facility personnel, and includes public address and alarm systems. The public address system provides for verbal instruction and communication to WTP personnel. The internal communication system also notifies personnel of the following local or plant-wide alarm-activated emergency situations: building evacuations, fire or explosion, radioactive discharges, and high airborne contamination. ~~The ERP~~The Contingency Plan found in Chapter 7.0 provides additional information on the response activities.

6.2.1.2 ~~6.3.1.2~~ External Communications

The WTP is equipped with devices for summoning emergency assistance from the Hanford Fire Department, the Hanford Hazardous Materials Response Team, or local emergency response teams, as necessary. External communication ~~will be~~is via a telephone communication system. Telephones ~~will be~~are available for staff use at numerous locations throughout the facility.

Under no circumstances will only one staff member be at the WTP site. In addition, the current Hanford communication system ~~will be~~is utilized as described in the *Hanford Emergency Management Plan* (DOE/RL-94-02), Section 5.2.

6.2.1.3 ~~6.3.1.3~~ Emergency Equipment

Portable fire extinguishers, fire control equipment, spill control equipment, and decontamination equipment are available to personnel at the WTP. A list of emergency and decontamination equipment is provided in the ~~ERP.~~ Contingency Plan, Chapter 7.0.

6.2.1.4 ~~6.3.1.4~~ Water for Fire Control

The primary water supply for fire protection ~~will be~~is provided from the 200 East Area raw water distribution system. The fire water supply system comprises two water storage tanks designed to National Fire Protection Association (NFPA) 22, *Standard for Water Tanks for Private Fire Protection* (NFPA 1998); and Factory Mutual (FM) Data Sheet 3-2, *Water Tanks for Fire Protection* (FM 2001a). Each water storage tank ~~will be~~is capable of supplying fire-water for a minimum of two hours at the maximum anticipated demand.

The pumping system is being designed to NFPA 20, *Standard for the Installation of Stationary Pumps for Fire Protection* (NFPA 1999a), and Factory Mutual Data Sheet 3-7N, *Stationary Pumps for Fire Protection* (FM 2001b). A fire pump ~~will be~~is installed and connected to each water storage tank. Each pump ~~will be~~is capable of providing the maximum system demand and ~~will be~~is connected to the underground distribution system in a manner that ~~will prevent~~ prevents single failure from disabling both water supplies.

The underground distribution piping and valving ~~will be~~is designed and installed according to NFPA 24, *Standard for Installation of Private Fire Service Mains and Their Appurtenances* (NFPA 1995); and Factory Mutual Data Sheet 3-10, *Installation and Maintenance of Private Fire Service Mains and Their Appurtenances* (FM 2000).

The distribution system in the various buildings and structures are being designed following the various appropriate codes and standards that apply to their specific occupancy. The standards include NFPA 13, *Standard for the Installation of Sprinkler Systems* (NFPA 1999b); NFPA 14, *Standard for the Installation of Standpipe, private Hydrant, and Hose Systems* (NFPA 2000); NFPA 15, *Standard for Water Spray Fixed Systems for Fire Protection* (NFPA 1996); and the appropriate Factory Mutual standards, as required.

6.3 ~~6.3.2~~ Aisle Space Requirement

~~Sufficient aisle space~~Aisle spacing will be maintained throughout the facility buildings to allow access of personnel and equipment responding to fires, spills, or other emergencies.

~~Alternate~~Evaluation of the 30-in. aisle ~~space~~spacing requirement by the DOE, WTP, EPA, and Ecology for ILAW and IHLW ~~and ILAW container storage area~~containers/canisters concluded

that aisle spacing in the range of 4 to 16 in. was adequate based on personnel safety and the immobilization of the waste.

Additional information about the ILAW and IHLW containers/canisters is ~~explained~~located in ~~Chapter~~ Appendix 6A, Section 6A.4.~~0~~1. Secondary wastes stored in container storage areas will meet the 30-inch minimum aisle space requirement.

6.4 Preventive Procedures, Structures, and Equipment

The following sections describe preventive procedures, structures, and equipment. Refer to Chapter 4.0 for additional information on feed transfer piping and tank overfill protection structures, equipment, and instrumentation.

6.4.1 Unloading/Loading Operations

Waste feed to be treated at the WTP ~~will be~~is received from the DST system staging tank through ~~a pipeline~~underground waste transfer lines. These waste feed transfer lines are equipped with secondary containment; leak detection; and cathodic protection~~, where~~. During DFLAW configuration, the waste transfer lines ~~are in contact with~~have been designed to be isolated from the soil~~.~~ environment; thus, not requiring cathodic protection. The WTP will not receive waste for treatment in containers.

The filled ILAW and IHLW containers and canisters ~~will be~~are loaded for transport using special shielding and heavy lifting equipment. The immobilized waste ~~will present~~presents no hazards from spills, leaks, run-off, or chemical exposures to personnel from the dangerous waste constituents because the waste ~~will be~~is solid (~~contain~~contains no free liquids) and the containers ~~will be~~are permanently sealed.

Containers of secondary waste bound for transport to another TSD will be packaged according to the federal, state, and local regulations ~~in place at the time. (Because the WTP will not begin generating secondary waste for several years, information such as the procedures, structures, and equipment is not yet available.)~~, as detailed in Chapter 4.0, Process Information.

6.4.2 Runoff

Waste stored and treated inside the ~~plants~~LAW & HLW facilities and Pretreatment Plant cannot come into contact with precipitation and therefore, cannot contaminate runoff from WTP structures, nor can precipitation enter secondary containment for the process and storage areas within the plants. Additionally, the process ~~condensate~~ vessels located outside ~~the Pretreatment Plant will be~~are surrounded by a concrete berm lined with a protective coating for secondary containment. The ~~secondary containment~~concrete berm will ~~collect and~~be designed to hold ~~leaks and~~ 100% of the capacity of the largest tank within the berm; in addition to, capable of containing the volume of a 24-hour rainfall as determined by a 25-year storm. Spills, leaks or precipitation ~~until~~in the ~~liquid can~~berm will be ~~removed. There will~~collected in a sump located within the bermed area and analyzed. Based on the analysis results, the waste may be ~~no~~

~~contaminated runoff from the outside tanks.~~containerized and managed as secondary waste or pumped back into the associated process.

6.4.3 Contamination of Water Supplies

The active portions of the facility are being designed with robust structural features such as thick, reinforced concrete floors and walls; secondary containment (lined with stainless steel or other protective coating); and off-gas treatment systems. The structural features alone are designed to prevent waste feed from contacting the environment. Operation of the WTP is also intended to prevent a release of waste to the environment. The WTP design, construction, and operation ~~will prevent~~prevents waste feed and secondary waste from contaminating groundwater and drinking water supplies (see Chapter 4.0 for structural design information).

Raw and potable water ~~will be~~is supplied to the WTP via separate underground lines from the 200 East Area water treatment and distribution system. Backflow preventers or interconnection breaks ensure that in the event water is contaminated at the WTP, the water cannot flow back into the water systems' sources. There will be no connections between potable water and raw water systems, or between the potable water system and piping that will contain mixed waste.

6.4.4 Equipment and Power Failures

Should there be a partial or total loss of electrical power to the WTP, automatic measures ensure the plant is in a safe operational configuration. ~~(~~Safe operational configuration is defined as a shutdown to minimal operations that ~~will prevent~~prevents releases and ~~prevent~~prevents unnecessary damage to the equipment~~.)~~.

The emergency power system ~~will consist~~consists of two diesel turbine~~-~~ driven automatically controlled emergency ~~diesel~~ generators and one standby diesel engine ~~standby~~ generator. The ~~automatic~~emergency and standby generators are connected to ~~three~~two separate 4.16kV emergency switchgears. ~~-~~The two emergency turbine generators support safety class systems in the PT and HLW facilities. The standby diesel generator supports the non-safety systems in the LAW facility. In the DFLAW configuration, emergency power will be reliant on uninterruptible power supply systems.

Upon loss of power the emergency diesel turbine generators ~~will~~ automatically start.~~-~~ The emergency diesel turbine generators are capable of starting, accelerating, and being loaded with the design load in a specified time limit. The standby diesel generator is started manually or automatically in the event of a prolonged loss of offsite power. The emergency power system ~~will be~~is connected to essential loads in order to ensure only a short-term power interruption for those loads designated as essential. Critical indications and controls are backed up by uninterruptible power supplies and batteries. ~~The plant will remain in a safe condition during loss of electrical power.~~

Egress lighting ~~will consist~~ consists of self-contained fixtures with battery packs and charging systems. These lighting systems ~~will be~~are located in stairways, exit routes and fire alarm stations and ~~will come on~~ activate automatically upon loss of normal power to the fixture. A

selected part of the normal lighting ~~will operate~~ operates as essential lighting, and ~~will provide~~provides a minimum level of illumination throughout the plant to aid in restoring the plant to normal operation. Essential lighting ~~will be~~is powered by the emergency power system and ~~will be~~is available ~~after an offsite~~whenever power ~~loss, following a delay required to start the emergency power supply diesel generators and for the generators to pick up the essential loads~~supplies are interrupted.

Selected instrumentation and controls ~~will be~~are unaffected by a loss of offsite power, since many of these instruments and controls ~~will be~~are powered by uninterruptible power supply systems. The uninterruptible power supply systems ~~will be~~are battery backed, and the battery chargers ~~will be~~are connected to the emergency power supply. Emergency lighting, such as in the central control room, ~~will be~~is connected to an uninterruptible power supply system. Radiation monitoring using continuous air monitors and area radiation monitors are also powered by these systems and continue operating during power failure.

6.4.5 Personal Protection Equipment

Facility design, operating practices, and administrative controls are the primary means of preventing personnel exposure to dangerous and mixed waste. The following practices, structures, and equipment are intended to minimize personnel exposure to chemicals, radioactive contamination, and radiation exposure:

- Remote operation and viewing
- Active ventilation that moves air from uncontaminated zones to progressively more contaminated zones
- Waste cutoff systems that automatically keep operations in a safe condition
- Secondary containment for liquids
- Offices, control rooms, change rooms, and lunchrooms that are situated to minimize casual exposure of personnel

Before the start of an operation that might expose employees to the risk of injury or illness, a review of the operation ~~will be~~is performed to ensure the appropriate protective gear is selected. Personnel ~~will be~~are instructed to wear personal protective equipment in accordance with training, posting, and instructions. The inspection schedule for personal protective equipment is found in Table 6A-1; however, the specific items listed as personal protective equipment ~~will be~~is in the ~~ERP (~~Contingency Plan, Chapter 7.0~~)~~, Table 7.5-4 and not duplicated here.

6.4.6 Prevent Releases to the Atmosphere ~~[WAC 173-303-806(4)(a)(viii)(F)]~~

The WTP off-gas treatment systems are the primary means of preventing contaminated releases to the atmosphere. The procedures, structures, and equipment used in these systems ~~will be~~are described in Chapter 4.0.

6.5 Prevention of Reaction of Ignitable, Reactive, and/or Incompatible Waste

While operating in the Direct Feed LAW configuration, WTP will not accept and/or treat mixed waste that carries the D001 (ignitable) waste code and/or the D003 (reactive) waste code. While operating in the baseline configuration, WTP may accept mixed waste that carries the D001 (ignitable) waste code and/or the D003 (reactive) waste code. Once waste has been received, process knowledge will be used to remove the D001 and D003 waste codes. Waste initially characterized as reactive and/or ignitable will only be stored in dangerous waste management units designed for these waste codes.

The following analyses, at a minimum, will be conducted for each new DFLAW feed campaign in accordance with the methods prescribed in WAC 173-303-110: ammonia, pH, metals, organic acids, mercury, cyanide, volatiles, semi-volatiles, PCBs/pesticides, anions, total organic carbon, and compatibility (ASTM Method D5058-90). Additionally, an evaluation of the LAW feed will have been performed to ensure that it does not carry waste codes D001 (ignitability) and D003 (reactivity) when transferred to the LAW Facility.

Tanks

Dangerous waste codes assigned to the waste in the Double-Shell Tank System Dangerous Waste Part A Permit Application (DOE-RL 1996) apply to the waste feed the WTP receives. The waste feed includes the waste codes for ignitability (D001) and reactivity (D003), but the waste is not expected to exhibit the characteristics listed in WAC 173-303-090, Dangerous Waste Characteristics for these two waste codes. Based on past process knowledge that includes the age, temperature, history, and chemical composition of the waste feed stored in the DST system, the waste codes D001 and D003 will be removed by the WTP. ~~The WTP will receive waste feed that is designated as ignitable or reactive; the WTP may store, in containers, secondary waste that is designated as ignitable, reactive, or incompatible (see Chapter 3.0 and Waste Treatment Plant~~ Prior to receiving waste from the tank farms, waste must meet the criteria in the Waste Analysis Plan~~,~~ (Appendix 3A).

~~Process knowledge, administrative controls, and the active ventilation system prevent the formation or release of ignitable vapors that could harm human health or the environment.~~

Containers

Small amounts of ignitable (D001) and reactive (D003) waste may be generated as secondary waste during maintenance and laboratory operations. Secondary waste streams that designate as ignitable and/or reactive are managed in accordance with administrative procedures. Storage of ignitable wastes are protected from sources of ignition or reaction. When ignitable waste is being handled, smoking and open flames are prohibited from the vicinity of the ignitable waste. Smoking is prohibited within the WTP process buildings and areas where dangerous waste is managed. In addition, “No smoking” signs are placed wherever a hazard exists from ignitable or reactive waste.

Large quantities of potentially incompatible waste are not expected to be generated through maintenance and laboratory operations. Administrative barriers will be put in place to prevent storage of incompatible waste within proximity to each other. For example, acids and bases are stored on separate portable secondary containment; oxidizers are stored in areas separate from combustible materials; and corrosive chemicals are stored on a separate secondary containment. In addition, storage areas are clearly marked with signs indicating appropriate waste type.

This page intentionally left blank.

Appendix 6A

Inspection ~~Schedules~~Plan

APPENDIX 6A
INSPECTION SCHEDULES

Contents

6A.0 INSPECTION PLAN 1

6A.1 General Inspection Requirements 2
6A.1.1 Inspection Methods 2
6A.1.2 Inspection Frequencies 2
6A.1.3 Suspended Inspections 3

6A.2 Inspection Log 3

6A.3 Schedule for Remedial Action for Problems Revealed 3
6A.3.1 Remedies 3

6A.4 Specific Process or Waste Type Inspection Requirements 4
6A.4.1 Container Inspections 4
6A.4.2 Tank Systems Inspections, Assessments and Corrective Actions 5
6A.4.2.1 Tank System Inspections 5
6A.4.2.2 Tank System Integrity Assessments 5
6A.4.2.3 Tank Systems – Corrective Actions 6

6A.6 Air Emissions Control and Detection 6
6A.6.1 Air Emissions from Process Vents (Subpart AA) 6
6A.6.2 Air Emission Standards for Equipment Leaks (Subpart BB) 6
6A.6.3 Air Emission Standards for Tanks and Containers (Subpart CC) 6

Tables

Table 6A-1 Example WTP General Inspection Schedule 7

Table 6A-2 Example Canister and Container Storage Inspection Schedules 8

Table 6A-3 Example Tank Systems and Ancillary Equipment Inspection Schedule 10

Table 6A-4 Example Cathodic Protection Inspection Schedule-Dangerous Waste Transfer Lines 16

Table 6A-5 Example Ignitable or Reactive Wastes Inspection Schedule 16

Table 6A-6 Example Miscellaneous Treatment Unit Schedule 17

Table 6A-7 Example Containment Buildings Inspection Schedule 22

Acronyms

ALARA	As Low As Reasonably Achievable
EMF	Effluent Management Facility
HLW	High-Level Waste
IHLW	Immobilized HLW
ILAW	Immobilized LAW
LAW	Low-Activity Waste
WTP	Waste Treatment and Immobilization Plant

APPENDIX 6-A INSPECTION PLAN

~~INSPECTION SCHEDULES~~

~~This section provides example WTP inspection schedules showing inspection frequencies and what to look for. These example inspection schedules list the monitoring equipment, safety and emergency equipment, security devices, preparedness and prevention equipment, and operating and structural equipment that help prevent, detect, or respond to environmental or human health hazards related to mixed and dangerous waste. A copy of the current and complete inspection schedules will be retained at the WTP or other approved locations.~~

~~Table 6A-1 contains examples of the general inspection requirements. The remaining tables are organized by type of waste management unit. Following is a list of tables and their locations included in this Appendix.~~

6A.0 INSPECTION PLAN

The following sections describe the Waste Treatment and Immobilization Plant (WTP) dangerous waste inspection plan. The WTP plan uses a graded approach to preventing and detecting malfunctions, deterioration, operator errors, and discharges that range from daily inspections to integrity assessments. This graded approach is comprised of activities that, at a minimum, meets the inspection requirements in WAC 173-303-320 and includes more precautions for equipment at higher risk of failure. Monitoring via instrumentation will be used to perform remote inspections in areas of high radioactivity, including, but not limited to, the Pretreatment Areas, Low Activity Waste (LAW) vitrification area, Laboratory, Effluent Management Facility (EMF) and the High Level Waste (HLW) vitrification area. Due to the radioactive nature of the waste and consistent with as low as reasonably achievable (ALARA) principles, monitoring by instrumentation is the primary means of fulfilling the inspection requirements in these areas. The WTP also use cameras, windows, process control, function checks, and preventive maintenance to comply with inspection requirements.

The inspections for various facilities are provided in sections 6A-1 through 6A-6 of this inspection schedule. Each table addresses a particular dangerous waste management unit, or group of units, such as tanks. Within each dangerous waste management unit table, the inspections are presented by system, and are further broken down by individual component. Once a dangerous waste management unit receives dangerous and/or mixed waste, the inspection criteria and frequencies detailed in the tables for each specific unit (Table 6A-1 through 6A-7) will be active. Controlled copies of the inspection plan will be kept at the WTP facility.

The WTP has no waste pile units, surface impoundment units, incinerator units, landfill units, or land treatment facilities. The requirements for inspection of these units and activities are not applicable to the WTP and are not included in this inspection schedule.

6A.1 General Inspection Requirements

This section describes general, WTP-wide inspection requirements used to help prevent, detect, or respond to environmental or human health hazards related to dangerous and/or mixed waste handling, treatment, and storage at the WTP.

6A.1.1 Inspection Methods

The method of inspection is how an inspection is to be performed. The three primary methods of inspection identified and required by this inspection plan are described below.

Methods of Inspection	
Physical	An inspection conducted physically in person (e.g. maintenance or operator). A physical inspection requires the physical presence of the inspector at the item of inspection and is not to be confused with a remote inspection. Due to accessibility limitation, physical inspections may be conducted with the aid of instruments (e.g., borescope, mirrors)
Remote	An inspection conducted by one or all of the following methods: closed-circuit television, observation windows, control panels, process control system, or any other inspection that is not conducted physically in person.
Functional	An inspection conducted by operating or testing the item being inspected to determine if equipment/instrument is operating correctly and capable of performing its function.

Due to the radioactive nature of the waste and consistent with ALARA principles, remote inspections are the primary method of conducting inspections for several facilities at WTP. Areas of higher radiation have been identified for all of the operating facilities, i.e. lab, Pretreatment, LAW vitrification area, HLW vitrification area and EMF. Unless otherwise stated in this permit, inspections of equipment, items, and systems are performed as physical inspections.

6A.1.2 Inspection Frequencies

The frequency of inspection is how often (at a minimum) an inspection must be performed. For the purposes of this inspection schedule, the various inspection frequencies have been established with sufficient conservatism to be protective of human health and the environment. The inspection frequencies most frequently used in this plan are outlined below.

Inspection Frequencies	
Frequency	**Definition**
Daily	Once per calendar day
Weekly	Once per calendar week *
Monthly	Once per calendar month
Bimonthly	Once every other calendar month
Quarterly	Once per calendar quarter
Semi-Annual	Once per 6-month calendar period

Annually	At least once during a 12-month period +/- 30 days

* Washington Administrative Code requires some dangerous waste inspections to be completed every 7 days. Affected inspections are identified in the Inspection Tables.

6A.1.3 Suspended Inspections

When a dangerous waste management unit is no longer receiving, managing or treating waste, the unit's specific inspections may be suspended. During these situations, inspections can be suspended until the affected system is placed back into dangerous waste operation. Prior to resuming dangerous waste operations, "initial" inspections will be conducted when the system is brought back online and regularly scheduled inspections are resumed. Inspections detailed in Table 6A-1 cannot be suspended.

In the case an inspection has been suspended prior to the expiration of the next scheduled inspection, the inspection requirement is satisfied by performing the inspection prior to resuming dangerous waste operations. In the case of suspended daily inspections, the initial (restart) inspection satisfies the daily inspection requirement for that day. All suspended inspections will be documented in the inspection log described in Section 6A.2. The decision to suspend a permit required inspection requires verbal notification to the Department of Ecology.

6A.2 Inspection Log

Inspection checklists will be used to document completion of the inspection schedule in this plan. These checklists will be records of the items contained in the inspection schedule and will be kept as a hardcopy or an electronic copy. Records of completed inspections will include the date and time of inspection; the legible, printed name and hand written signature of the inspector (or equivalent), a notation of the observations made, an account of spills or discharges and the date and nature of any repairs or remedial actions taken.

Personnel performing these inspections will be appropriately trained and qualified in the system being inspection as prescribed in Chapter 8.0, Personnel Training. When performing the inspection, the inspector will note all observations and deficiencies on the inspection sheet. Inspection deficiencies discovered by the inspector and corrective actions that have been initiated are delegated to responsible individuals in the operations group. Completed and/or suspended inspection checklists are stored in the WTP operating record for at least 5 years from the date of the inspection.

6A.3 Schedule for Remedial Action for Problems Revealed

6A.3.1 Remedies

Problems revealed by inspections will be corrected on a schedule that prevents hazards to the public health and environment. If inspections show that nonemergency maintenance is required, maintenance is completed as soon as possible to prevent further damage and to reduce the need for subsequent emergency response. Non-emergency corrective actions will be initiated within 24 hours if possible; however, additional response time may be required because of the radioactive component of the waste being managed at the WTP. Where a hazard is imminent or

has already occurred, remedial actions are taken immediately to prevent equipment damage and prevent hazards to human health and the environment.

If an inspection identifies a fire, explosion, or release involving a dangerous waste, or an imminent hazard to human health or the environment, the WTP Contingency Plan, Chapter 7.0, is followed.

6A.4 Specific Process or Waste Type Inspection Requirements

6A.4.1 Container Inspections

The WTP will store immobilized low-activity waste (ILAW) in containers and immobilized high-level waste (IHLW) in canisters, and secondary dangerous and mixed waste in containers. For purposes of IHLW, the term canisters are used to specifically address the unique disposal requirements of the filled containers. Throughout this section, general references to containers also applies to the IHLW canisters. Inspections of container storage areas will be performed weekly when waste is in the storage areas.

Immobilized Low-Activity Containers and High-Level Waste Canisters

Filled ILAW containers and IHLW canisters will be radioactive and thus, inspections must be performed remotely. Therefore, in lieu of conventional container inspections while the containers are in storage, each container will be inspected before and after filling, and when it is moved into and out of the ILAW and IHLW containment buildings or container storage areas. The containers will not contain free liquids, will be chemically and physically stable (not ignitable or reactive), and will have either a welded closure (IHLW) or pressed fitted closure seal (ILAW). The IHLW canisters will be placed in special racks inside the storage areas that will prevent them from toppling.

The WTP will inspect the ILAW and IHLW container storage or containment building areas, when they are in use, weekly by remote means. As specified in III.10.D.4.b.ii, these remotely managed storage areas are exempt from the 30-inch aisle spacing. ILAW and IHLW containers/canisters aisle spacing is anticipated to be in the range of 4 to 16 inches, as described in Appendix 4E.1.2.1 and 4F.1.2.1, respectively. Tables 6A-2 details the methods and criteria used to inspect the ILAW containers and IHLW canisters.

The dangerous waste container labeling requirements will be met by using a unique alphanumeric identifier that will be welded to each container. Deterioration of the identifier is not expected due to the permanent nature of these markings and provisions for subsequent handling that will safeguard against damage to the containers and the identifying marks.

Using the identification on each container, a tracking system will record key movements of each immobilized waste container through the facility. Information about the waste canister tracking system is in Chapter 4.0. For each container of ILAW and IHLW produced, the system will track the following:

- The location of each container in process and storage areas
- The date that waste was first placed in the container

- The date the container was shipped from the facility, and its destination
- The nature of waste in the container, including dangerous waste designation codes, and land disposal restriction requirements

Secondary and Miscellaneous Waste in Containers

Secondary waste refers to newly generated waste (or a waste by-product from treating the Hanford tanks waste) that is designated as dangerous waste or mixed waste. Secondary waste will be generated at the WTP, for example, waste associated with laboratory activities, maintenance activities and failed contaminated equipment.

6A.4.2 Tank Systems Inspections, Assessments and Corrective Actions

6A.4.2.1 Tank System Inspections

A description of the tank systems, and their safety and interlock controls, at the WTP can be found in Chapter 4. Access to regulated tanks for inspection and integrity assessments must be consistent with keeping radiation exposure ALARA. Each tank or grouping of identical tanks is shown as a line item in the inspection schedule, Table 6A-3. Each inspection item includes a description of problems to look for and the frequency of inspection. The inspection will address the tanks overfill and spill control equipment, data gathered from monitoring and leak detection equipment, construction materials, the area immediately surrounding the externally accessible portion of the tank as well as secondary containment system.

6A.4.2.2 Tank System Integrity Assessments

Periodic integrity assessments will be performed over the life of the regulated tank systems to assure they retain their structural integrity and will not collapse, rupture, or fail. The frequency of integrity assessments will be based on the potential for corrosion and erosion. The classification system allows extra assessment efforts to be focused on tank system that may have the highest potential consequences if failure or loss of containment should occur.

Assessment of equipment with lower potential for corrosion and erosion with accessible areas or hot cells is made during the routine or maintenance outages and within 10 years after start of hot commissioning at selected accessible points where baseline NDE measurements had been taken. Subsequent integrity assessments will be based on the results of previous integrity assessments, the age of the equipment, materials of construction, characteristics of the waste, and any other relevant factors, but there will be no more than 10 years between integrity assessments.

Assessment of equipment with higher potential for corrosion and erosion within accessible areas is made during routine or maintenance outages and within 7 years after the start of hot commissioning at selected accessible points where baseline NDE measurements had been taken. Subsequent integrity assessments will be based on the results of previous integrity assessments, the age of the equipment, materials of construction, characteristics of the waste, and any other relevant factors but there will be no more than 7 years between integrity assessments.

6A.4.2.3 Tank Systems – Corrective Actions

If a leak or spill of dangerous and/or mixed waste is detected in a secondary containment system during the course of an inspection, the permittee will follow the remedial actions found in permit conditions III.10.E.5.i.i through III.10.E.5.i.v.

6A.5 Storage of Ignitable or Reactive Wastes

Small amounts of ignitable (D001) and reactive (D003) waste may be generated as secondary waste during maintenance and laboratory operations. Management of this waste will be performed either in Lab Pack Room (A-0139A) or Waste Drum Management Room (A-0139), in accordance with WAC 173-303-395. Annual inspections of all areas managing D001 and D003 waste will be conducted by personnel familiar with the International Fire Code, or in the presence of the local, state, or federal fire marshal. The date and time of the inspection, the name of the inspector or fire marshal, a notation of the observation made, and any remedial actions, will be documented in the inspection log.

6A.6 Air Emissions Control and Detection

6A.6.1 Air Emissions from Process Vents (Subpart AA)

The WTP does not use any of the regulated devices or processes listed; therefore, the WTP will not be subject to regulation under Subpart AA (40 CFR 264).

6A.6.2 Air Emission Standards for Equipment Leaks (Subpart BB)

The WAC 173-303-691 and Subpart BB (40 CFR 264) applies to equipment that contains or contacts hazardous wastes with organic concentrations of at least 10 percent by weight. This provision will not apply to the facility because the WTP will not accept or treat wastes with organic concentrations at or above 10 percent by weight. Compliance with this provision will be documented through analyses of verification samples, as described in the Waste Analysis Plan.

6A.6.3 Air Emission Standards for Tanks and Containers (Subpart CC)

The regulations specified under WAC 173-303-692 and 40 CFR Part 264 Subpart CC, incorporated by reference, do not apply to the WTP mixed waste tank systems and containers. These tanks and containers qualify as waste management units that are "used solely for the management of radioactive dangerous waste in accordance with all applicable regulations under the authority of the Atomic Energy Act and the Nuclear Waste Policy Act" and are excluded under WAC 173-303-692(1)(b)(vi).

Containers or tanks bearing nonradioactive, dangerous waste, such as maintenance and laboratory waste, that are not excluded under WAC 173-303-692(1)(b)(ii) or 40 CFR 264.1082(c), will comply with the container and tank standards specified under 40 CFR part 264 Subpart CC.

Table 6A-1 Example WTP General Inspection Schedule

Component Name	Inspection	Frequency
Security Devices		
WTP inner fence	Check for damaged fencing	Monthly
Posted warning signs (see Chapter 6.0, section 1.~~1.~~32) that say: "DANGER - UNAUTHORIZED PERSONNEL KEEP OUT" ~~(or equivalent)~~	Verify signs are present, legible from a distance of 25 ft, and visible; ensure buildings or rooms containing dangerous or mixed waste are posted	Monthly
Points of access to active portions turnstiles, doors, and/or magnetic encoded bar readers	Verify operability	Monthly
Emergency Preparedness Equipment		
Safety showers and eyewash stations	Verify operability and sufficient pressure	At least every seven days
Automatic fire suppression system(s)	Verify operability	Annually
Portable fire extinguishers (all types)	Check for adequate charge	Monthly
Emergency lighting	Test operability	Monthly
Spill kit and spill control equipment	Verify contents complete	Quarterly
Emergency sirens and alarms	Verify operability	Monthly
Voice paging system (pagers or PA system)	Verify operability	Monthly
Emergency telephones	Verify operability	Monthly
Personal protective clothing and equipment	Ensure supplies meet ERP listing and requirements	Quarterly
Power Supply Inspections		
Emergency uninterruptible power supply system(s)	Verify operability	Annual
Emergency diesel generator	Perform no-load test and verify sufficient fuel	Annual

Table 6A-2-2 Example Canister and Container Storage -Inspection Schedules

Name	Inspection	Frequency
Dangerous and/or Mixed Waste Container Storage Inspections		
• HLW East corridor El. 0 ft (HC-0108/09/10) • HLW Loading Area (H-0130) ~~• Laboratory waste management area~~ • Lab Pack Room (A-0139A) • Waste Drum Management Room (A-0139) • Non-radioactive dangerous waste container storage area • Failed melter storage facility Container storage in HLW, PTF, and LAW Containment Building described in Table III.10.D.A	Verify major risk labels present and legible, ensure all containers are closed (except when waste is being added to container); Check that container storage areas are free of liquid and debris; Check for significant cracks, gaps, and other signs of deterioration of storage area floors; Verify minimum 30 inches of aisle space between containers, except for IHLW canisters and ILAW containers ; Verify that any dangerous and or mixed waste container holding free liquids have portable secondary containment and no liquids accumulated in portable secondary containment	At least every seven days
Immobilized -ILAW Container Storage in Containment Buildings		
-ILAW -containers	Inspect that unique alphanumeric identifier is welded to ILAW container and is legible	Prior to placing in storage
Filled -ILAW containers [1]	Inspect (visually, by camera surveillance, or cell window) each container for cracks, leaks, bulges, or other abnormalities	After sealing container
	Record in tracking system each container's location when placed in storage; Record in tracking system all container location changes if container(s) are moved while in storage; Verify container in recorded location when transporting container out of WTP storage.	Within 48 hours of placing or moving each container
Container Monitoring/Export Areas (L-0109E and L-0115E)	Inspect (visually, by camera surveillance, or cell window) for deformities in storage area floors or debris in storage area	At least every seven days when facility is storing waste in immobilized waste container monitoring/export area
HLW Vitrification Plant Canister Storage Area		
IHLW canisters	Inspect that unique alphanumeric identifier is welded to IHLW canister and is legible	Prior to placing in storage
Filled IHLW Canister [1]	Inspect (visually, by camera surveillance, or cell window) each canister for cracks, leaks, bulges, or other abnormalities	After sealing canister

Table 6A-2-2 Example Canister and Container Storage -Inspection Schedules

Name	Inspection	Frequency
	Record in tracking system each canister's location when placed in storage; Record in tracking system all canister location changes if canister(s) are moved while in storage; Verify canister in recorded location when transporting canister out of WTP storage.	Within 48 hours of placing or moving each canister
IHLW Canister Storage Cave (H-0132)	Inspect (visually, by camera surveillance, or cell window) for deformities in storage area floors or debris in storage area	At least every seven days when facility is storing waste in immobilized waste canister storage area

Footnote:
[1] Direct access to container of ILAW and IHLW for the purposes of inspection is precluded due to high radioactivity levels. Therefore, ILAW and IHLW containers are exempt from the 30-inch aisle requirements (III.10.D.4.b.ii).

Table 6A-3-3 Example Tank Systems and Ancillary Equipment Inspection Schedule

Component Name	Plant item number	Inspection	Frequency
Pretreatment Plant Tank System			
FRP			
Waste feed receipt vessels	FRP-VSL-00002A FRP-VSL-00002B FRP-VSL-00002C FRP-VSL-00002D	Inspect tank level monitoring data to prevent overflow	Daily
FEP			
Waste feed evaporator feed vessels	FEP-VSL-00017A FEP-VSL-00017B	Inspect tank level monitoring data to prevent overflow	Daily
Waste feed evaporator condensate vessel	FEP-VSL-00005	Inspect tank level monitoring data to prevent overflow	Daily
HLP			
HLW Lag storage vessel	HLP-VSL-00027A HLP-VSL-00027B	Inspect tank level monitoring data to prevent overflow	Daily
HLW feed receipt vessel	HLP-VSL-00022	Inspect tank level monitoring data to prevent overflow	Daily
HLW feed blend vessel	HLP-VSL-00028	Inspect tank level monitoring data to prevent overflow	Daily
UFP			
Ultrafiltration feed preparation vessels	UFP-VSL-00001A UFP-VSL-00001B	Inspect tank level monitoring data to prevent overflow	Daily
Ultrafiltration feed vessels	UFP-VSL-00002A UFP-VSL-00002B	Inspect tank level monitoring data to prevent overflow	Daily
Ultrafilter permeate collection vessel	UFP-VSL-00062A UFP-VSL-00062B UFP-VSL-00062C	Inspect tank level monitoring data to prevent overflow	Daily
Ultrafilters	UFP-FILT-00001A UFP-FILT-00001B UFP-FILT-00002A UFP-FILT-00002B UFP-FILT-00003A UFP-FILT-00003B UFP-FILT-00004A UFP-FILT-00004B UFP-FILT-00005A UFP-FILT-00005B	Inspect tank level monitoring data to prevent overflow	Daily

Table 6A-3-3 Example Tank Systems and Ancillary Equipment Inspection Schedule

Component Name	Plant item number	Inspection	Frequency
CXP			
Cesium ion exchange feed vessel	CXP-VSL-00001	Inspect tank level monitoring data to prevent overflow	Daily
Cesium ion exchange columns	CXP-IXC-00001 CXP-IXC-00002 CXP-IXC-00003 CXP-IXC-00004	Inspect column monitoring data to prevent release	Daily
Cesium reagent vessel	CXP-VSL-00005	Inspect tank level monitoring data to prevent overflow	Daily
Cesium ion exchange caustic rinse collection vessel	CXP-VSL-00004	Inspect tank level monitoring data to prevent overflow	Daily
Cesium ion exchange treated LAW collection vessels	CXP-VSL-00026A CXP-VSL-00026B CXP-VSL-00026C	Inspect tank level monitoring data to prevent overflow	Daily
CNP			
Cesium evaporator eluate lute vessel	CNP-VSL-00001	Inspect tank level monitoring data to prevent overflow	Daily
Cesium evaporator recovered nitric acid vessel	CNP-VSL-00004	Inspect tank level monitoring data to prevent overflow	Daily
Eluate contingency storage vessel	CNP-VSL-00003	Inspect tank level monitoring data to prevent overflow	Daily
PVP			
Vessel ventilation HEME drain collection vessel	PVP-VSL-00001	Inspect tank level monitoring data to prevent overflow	Daily
PWD			
Ultimate overflow vessel	PWD-VSL-00033	Inspect tank level monitoring data to prevent overflow	Daily
Plant wash vessel	PWD-VSL-00044	Inspect tank level monitoring data to prevent overflow	Daily
Acidic/alkaline effluent vessel	PWD-VSL-00015	Inspect tank level monitoring data to prevent overflow	Daily

Table 6A-~~3~~-3 Example Tank Systems and Ancillary Equipment Inspection Schedule

Component Name	Plant item number	Inspection	Frequency
Acidic/alkaline effluent vessel	PWD-VSL-00016	Inspect tank level monitoring data to prevent overflow	Daily
C3 floor drains tank	PWD-VSL-00046	Inspect tank level monitoring data to prevent overflow	Daily
HLW effluent transfer vessel	PWD-VSL-00043	Inspect tank level monitoring data to prevent overflow	Daily
TLP			
Treated LAW evaporator condensate vessel	TLP-VSL-00002	Inspect tank level monitoring data to prevent overflow	Daily
LAW SBS condensate receipt vessel	TLP-VSL-00009A TLP-VSL-00009B	Inspect tank level monitoring data to prevent overflow	Daily
TCP			
Treated LAW concentrate storage vessel	TCP-VSL-00001	Inspect tank level monitoring data to prevent overflow	Daily
RDP			
Spent resin slurry vessels	RDP-VSL-00002A RDP-VSL-00002B RDP-VSL-00002C	Inspect tank level monitoring data to prevent overflow	Daily
Spent resin dewatering moisture separation vessel	RDP-VSL-00004	RESERVED	Daily
RLD			
Process condensate vessels	RDP-TK-00006A RDP-TK-00006B	Inspect tank level monitoring data to prevent overflow	Daily
Alkaline effluent vessels	RLD-VSL-00017A RLD-VSL-00017B	Inspect tank level monitoring data to prevent overflow	Daily
PIH			
Decontamination soak tank	PIH-TK-00001	Inspect tank level monitoring data to prevent overflow	Daily
LAW Vitrification Plant Tank System			
LCP			
LAW Melter 1 concentrate receipt vessel	LCP-VSL-00001	Inspect tank level monitoring data to prevent overflow	Daily
LAW Melter 2 concentrate receipt vessel	LCP-VSL-00002	Inspect tank level monitoring data to prevent overflow	Daily

Table 6A-3-3 Example Tank Systems and Ancillary Equipment Inspection Schedule

Component Name	Plant item number	Inspection	Frequency
LFP			
Melter 1 feed preparation vessel	LFP-VSL-00001	Inspect tank level monitoring data to prevent overflow	Daily
Melter 1 feed vessel	LFP-VSL-00002	Inspect tank level monitoring data to prevent overflow	Daily
Melter 2 feed preparation vessel	LFP-VSL-00003	Inspect tank level monitoring data to prevent overflow	Daily
Melter 2 feed vessel	LFP-VSL-00004	Inspect tank level monitoring data to prevent overflow	Daily
LVP			
LAW caustic collection tank	LVP-TK-00001	Inspect tank level monitoring data to prevent overflow	Daily
LOP			
LAW Melter 1 SBS condensate vessel	LOP-VSL-00001	Inspect tank level monitoring data to prevent overflow	Daily
LAW Melter 2 SBS condensate vessel	LOP-VSL-00002	Inspect tank level monitoring data to prevent overflow	Daily
RLD			
Plant wash vessel	RLD-VSL-00003	Inspect tank level monitoring data to prevent overflow	Daily
C3/C5 drains/sump collection vessel	RLD-VSL-00004	Inspect tank level monitoring data to prevent overflow	Daily
SBS condensate collection vessel	RLD-VSL-00005	Inspect tank level monitoring data to prevent overflow	Daily
HLW Vitrification Plant Tank System			
HOP			
Melter 1 SBS condensate receiver vessel 1	HOP-VSL-00903	Inspect tank level monitoring data to prevent overflow	Daily
Melter 2 SBS condensate receiver vessel 2	HOP-VSL-00904	Inspect tank level monitoring data to prevent overflow	Daily
HDH			
Canister decon vessel 1	HDH-VSL-00002	Inspect tank level monitoring data to prevent overflow	Daily
Canister decon vessel 2	HDH-VSL-00004	Inspect tank level monitoring data to prevent overflow	Daily

Table 6A-~~3~~3 Example Tank Systems and Ancillary Equipment Inspection Schedule

Component Name	Plant item number	Inspection	Frequency
Waste neutralization vessel	HDH-VSL-00003	Inspect tank level monitoring data to prevent overflow	Daily
Canister rinse vessel	HDH-VSL-00001	Inspect tank level monitoring data to prevent overflow	Daily
RLD			
Acidic waste vessel	RLD-VSL-00007	Inspect tank level monitoring data to prevent overflow	Daily
Plant wash and drains vessel	RLD-VSL-00008	Inspect tank level monitoring data to prevent overflow	Daily
Offgas drains collection vessel	RLD-VSL-00002	Inspect tank level monitoring data to prevent overflow	Daily
HFP			
HLW Melter 1 feed preparation vessel	HFP-VSL-00001	Inspect tank level monitoring data to prevent overflow	Daily
HLW Melter 2 feed preparation vessel	HFP-VSL-00005	Inspect tank level monitoring data to prevent overflow	
HLW Melter 1 feed vessel	HFP-VSL-00002	Inspect tank level monitoring data to prevent overflow	Daily
HLW Melter 2 feed vessel	HFP-VSL-00006	Inspect tank level monitoring data to prevent overflow	
HSH			
Decontamination Tank Melter cave 1	HSH-TK-00001	Inspect tank level monitoring data to prevent overflow	Daily
Decontamination Tank Melter cave 2	HSH-TK-00002	Inspect tank level monitoring data to prevent overflow	Daily
Analytical Laboratory Tank System			
RLD			
Lab area sink drain collection vessel	RLD-VSL-00164	Inspect tank level monitoring data to prevent overflow	Daily
Hot cell drain collection vessel	RLD-VSL-00165	Inspect tank level monitoring data to prevent overflow	Daily
Effluent Management Facility Tank System			
Evaporator Process System Vessels	DEP-VSL-00001 DEP-VSL-00002	Inspect tank level monitoring data to prevent overflow	Daily

Table 6A-~~3~~-3 Example Tank Systems and Ancillary Equipment Inspection Schedule

Component Name	Plant item number	Inspection	Frequency
Evaporator Discharge System Vessels	DEP-VSL-00003A DEP-VSL-00003B DEP-VSL-00003C	Inspect tank level monitoring data to prevent overflow	Daily
	DEP-VSL-00004A DEP-VSL-00004B	Inspect tank level monitoring data to prevent overflow	Daily
	DEP-VSL-00005A DEP-VSL-00005B	Inspect tank level monitoring data to prevent overflow	Daily
Primary Containment Sumps as identified the WTP Permit (Reserved)			
Secondary Containment			
Leak detectors for all tank systems, miscellaneous units, and containment buildings managing dangerous and/or mixed waste	See Chapter 4.0	Monitor leak detection instrumentation or monitoring data to detect leaks	Daily
Underground Piping (receiving from DST and transferring out)			
Leak detectors		Monitor leak detection instrumentation or monitoring data to detect leaks	Daily

Table 6A-~~4~~-4 Example Cathodic Protection Inspection Schedule-Dangerous Waste Transfer Lines

Component Name and Line Number	Inspection	Frequency
Cathodic protection systems for dangerous and mixed waste transfer lines	Verify proper operation	Initial (less than 6 months after installation) Annually (from date of initial installation inspection, above)
All sources of impressed current supporting cathodically protected dangerous and mixed waste transfer lines	Test for proper function	Bi-monthly

Table 6A-~~5~~-5 Example Ignitable or Reactive Wastes Inspection Schedule

Component Name	Inspection	Frequency
~~Receipt tanks~~	~~Inspect, by qualified personnel or in the presence of fire marshal, for compliance with Uniform Fire Code and enter inspection into operating record~~	~~365 days~~
Container storage areas storing ignitable or reactive waste	Inspect, by professional person or in the presence of fire marshal for compliance with Uniform Fire Code and enter inspection into operating record. Inspect container storage areas for compliance with WAC 173-303-630 (8) requirements.	365 days

Table 6A-~~6~~ 6 Example Miscellaneous Treatment Unit Schedule

Component Name	Plant Item Number	Inspection	Frequency
Pretreatment Facility Miscellaneous Treatment Unit Systems			
TLP			
Treated LAW evaporator separator vessel	TLP-SEP-00001	Inspect vessel level monitoring data to prevent overflow	Daily
Treated LAW Reboiler	TLP-RBLR-00001	TBD	TBD
Treated LAW Primary Condenser	TLP-COND-00001	TBD	TBD
Treated LAW Inter-Condenser	TLP-COND-00003	TBD	TBD
Treated LAW After-Condenser	TLP-COND-00002	TBD	TBD
FEP			
Waste Feed Evaporator Separator Vessels	FEP-SEP-00001A FEP-SEP-00001B	TBD	TBD
Waste Feed Evaporator Reboilers	FEP-RBLR-00001A FEP-RBLR-00001B	TBD	TBD
Waste Feed Evaporator Primary Condensers	FEP-COND-00001A FEP-COND-00001B	TBD	TBD
Waste Feed Evaporator Inter-Condensers	FEP-COND-00002A FEP-COND-00002B	TBD	TBD
Waste Feed Evaporator After-Condensers	FEP-COND-00003A FEP-COND-00003B	TBD	TBD
PJV			
PJV Primary HEPA filters	PJV-HEPA-00001A PJV-HEPA-00001B PJV-HEPA-00001C PJV-HEPA-00001D PJV-HEPA-00001E PJV-HEPA-00001F PJV-HEPA-00001G	TBD	TBD
PJV Secondary Exhaust HEPA filters	PJV-HEPA-00002A PJV-HEPA-00002B PJV-HEPA-00002C PJV-HEPA-00002D PJV-HEPA-00002E PJV-HEPA-00002F	TBD	TBD
PJV Exhaust fans	PJV-FAN-00001A PJV-FAN-00001B PJV-FAN-00001C	TBD	TBD
PJV Demisters	PJV-DMST-00002A PJV-DMST-00002B PJV-DMST-00002C	TBD	TBD

Table 6A-~~6~~ 6 Example Miscellaneous Treatment Unit Schedule

Component Name	Plant Item Number	Inspection	Frequency
PVP			
Electric heaters	PVP-HTR-00001A PVP-HTR-00001B PVP-HTR-00001C	TBD	TBD
Vessel Vent After-cooler	PVP-CLR-00001	TBD	TBD
Vessel Vent Carbon Bed Adsorbers	PVP-ADBR-00001A PVP-ADBR-00001B	TBD	TBD
Vessel Vent VOC Oxidizer unit	PVP-OXID-00001	TBD	TBD
Vessel Vent Adsorber Outlet filters	PVP-FILT-00001	TBD	TBD
Vessel Vent HEME (mist eliminator)	PVP-HEME-00001A PVP-HEME-00001B PVP-HEME-00001C	TBD	TBD
Vessel Vent Scrubbing Liquid Cooler	PVP-HX-00002	TBD	TBD
Vessel Vent Caustic Scrubber	PVP-SCB-00002	TBD	TBD
PVV			
Vessel Vent HEPA primary filters	PVV-HEPA-00001A PVV-HEPA-00001B	TBD	TBD
Vessel Vent HEPA secondary filters	PVV-HEPA-00002A PVV-HEPA-00002B	TBD	TBD
Vessel Vent Exhaust fans	PVV-FAN-00001A PVV-FAN-00001B	TBD	TBD
CNP			
Cesium evaporator Separator Vessel	CNP-EVAP-00001	TBD	TBD
Cesium evaporator concentrate reboiler	CNP-HX-00001	TBD	TBD
Cesium evaporator nitric acid rectifier column	CNP-DISTC-00001	TBD	TBD
Cesium evaporator primary condenser	CNP-HX-00002	TBD	TBD
Cesium evaporator inter-condenser	CNP-HX-00003	TBD	TBD
Cesium evaporator after-condenser	CNP-HX-00004	TBD	TBD

Table 6A-~~6~~ 6 Example Miscellaneous Treatment Unit Schedule

Component Name	Plant Item Number	Inspection	Frequency
LAW Vitrification Plant Miscellaneous Treatment Unit Subsystems			
LMP			
LAW Melter 1 LAW Melter 2	LMP-MLTR-00001 LMP-MLTR-00002	Visual inspection (via cave window or CCTV if provided) for damage, leaks, or abnormalities Inspect melter level monitoring data to prevent overflow	Daily
LOP			
Melter 1 and melter 2 submerged bed scrubbers	LOP-SCB-00001 LOP-SCB-00002	TBD	TBD
Melter 1 and melter 2 wet electrostatic precipitators	LOP-WESP-00001 LOP-WESP-00002	TBD	TBD
Primary/standby film coolers	LOP-FCLR-00001 LOP-FCLR-00002 LOP-FCLR-00003 LOP-FCLR-00004	TBD	TBD
LVP			
Melter Offgas Caustic scrubber	LVP-SCB-00001	TBD	TBD
Melter Offgas HEPA filters	LVP-HEPA-00001A LVP-HEPA-00001B LVP-HEPA-00002A LVP-HEPA-00002B LVP-HEPA-00003A	TBD	TBD
Thermal catalytic oxidizer	LVP-SCO-00001	TBD	TBD
NO_xselective catalytic reduction unit	LVP-SCR-00001	TBD	TBD
Melter Offgas HEPA Preheaters	LVP-HTR-00001A LVP-HTR-00001B	TBD	TBD
Catalytic oxidizer electric heater	LVP-HTR-00002	TBD	TBD
Catalytic oxidizer heat recovery unit	LVP-HX-00001	TBD	TBD
Offgas Mercury Adsorbers	LVP-ADBR-0000A1/1B	TBD	TBD
Melter Offgas Exhausters	LVP-EXHR-00001A LVP-EXHR-00001B LVP-EXHR-00001C	TBD	TBD

Table 6A-~~6~~ 6 Example Miscellaneous Treatment Unit Schedule

Component Name	Plant Item Number	Inspection	Frequency
HLW Vitrification Plant Miscellaneous Treatment Unit Subsystems			
HMP			
HLW Melter 1	HMP-MLTR-00001	Visual inspection (via cave window or CCTV if provided) for damage, leaks, or abnormalities Inspect melter level monitoring data to prevent overflow	Daily
HLW Melter 2	HMP-MLTR-00002		
HOP			
Submerged Bed Scrubber	HOP-SCB-00001 HOP-SCB-00002	TBD	TBD
Wet Electrostatic Precipitators (WESP)	HOP-WESP-00001 HOP-WESP-00002	TBD	TBD
Thermal Catalytic Oxidizer	HOP-SCO-00001 HOP-SCO-00004	TBD	TBD
NOx Selective Catalytic Reduction Units	HOP-SCR-00001 HOP-SCR-00002	TBD	TBD
Silver Mordenite Columns	HOP-ABS-00002 HOP-ABS-00003	TBD	TBD
HEPA Filters	HOP-HEPA-00001A HOP-HEPA-00001B HOP-HEPA-00002A HOP-HEPA-00002B HOP-HEPA-00007A HOP-HEPA-00007B HOP-HEPA-00008A HOP-HEPA-00008B	TBD	TBD
Melter Offgas Film Coolers	HOP-FCLR-00001/3 HOP-FCLR-00002/4	TBD	TBD
Catalyst Skid Preheaters	HOP-HX-00001 HOP-HX-00003	TBD	TBD
HEPA Preheaters	HOP-HTR-00001B HOP-HTR-00002A HOP-HTR-00005A HOP-HTR-00005B	TBD	TBD
Catalyst Skid Electric Heaters	HOP-HTR-00007 HOP-HTR-00001		
Silver Mordenite Preheaters	HOP-HX-00002 HOP-HX-00004	TBD	TBD

Table 6A-~~6~~ 6 Example Miscellaneous Treatment Unit Schedule

Component Name	Plant Item Number	Inspection	Frequency
Stack Extraction Fans	HOP-FAN-00008A HOP-FAN-00008B HOP-FAN-00008C HOP-FAN-00010A HOP-FAN-00010B HOP-FAN-00010C	TBD	TBD
Booster Extraction Fans	HOP-FAN-00001A HOP-FAN-00001B HOP-FAN-00001C HOP-FAN-00009A HOP-FAN-00009B HOP-FAN-00009C	TBD	TBD
Activated Carbon Adsorber	HOP-ADBR-00001A HOP-ADBR-00001B HOP-ADBR-00002A HOP-ADBR-00002B	TBD	TBD
High Efficiency Mist Eliminators (HEME)	HOP-HEME-00001A HOP-HEME-00001B HOP-HEME-00002A HOP-HEME-00002B	TBD	TBD
PJV			
PJV HEPA Filters	PJV-HEPA-00004A PJV-HEPA-00004B PJV-HEPA-00005A PJV-HEPA-00005B	TBD	TBD
Pulse Ventilation HEPA Electric Preheater	PJV-HTR-00002	TBD	TBD
Pulse Vent Extraction Fans	PJV-FAN-00002A PJV-FAN-00002B	TBD	TBD

~~Table 6A-7 Example Containment Buildings Inspection Schedule~~**Effluent Management Facility Miscellaneous Treatment Unit Subsystems**			
DEP evaporator separator	DEP-EVAP-00001	TBD	TBD
DEP evaporator reboiler	DEP-RBLR-00001	TBD	TBD
Evaporator primary condenser	DEP-COND-00001	TBD	TBD
Evaporator intercondenser	DEP-COND-00002	TBD	TBD
Evaporator after condenser	DEP-COND-00003	TBD	TBD
Process condensate lga storage transfer line filter	DEP-FILT-00002	TBD	TBD
Evaporator Feed prefilter	DEP-FILT-00003	TBD	TBD
Condensate duplex cartridge filter	DEP-FILT-00004A DEP-FILT-00004B	TBD	TBD
Feed vessel area sump pump filter	DEP-FILT-00005	TBD	TBD
Concentrate effluent cooler	DEP-HX-00001	TBD	TBD
Process Ventilation primary HEPA	DVP-HEPA-00003A DVP-HEPA-00003B	TBD	TBD
Process Ventilation secondary HEPA	DVP-HEPA-00004A DVP-HEPA-00004B	TBD	TBD
Process Ventilation Heater	DVP-HTR-00001A/B	TBD	TBD
Process Ventilation Exhauster	DVP-EXHR-00001A/B	TBD	TBD

Table 6A-7 Example Containment Buildings Inspection Schedule

Component Name	Inspection	Frequency
Containment building areas as designated in Chapter 4.0	Inspect and record in the operating record data gathered from monitoring equipment and leak detection equipment as well as the containment building and the area immediately surrounding the containment building to detect signs of releases of dangerous waste. All areas should be inspected for significant cracks, gaps, corrosion, or other signs of deterioration; look for liquids on floor. Check differential pressure monitoring records to ensure negative pressure in containment building area	At least every seven days

1

Chapter 7.0

Contingency Plan

This page intentionally left blank.

Chapter 7.0
CONTINGENCY PLAN

Contents

7.1 General Facility Information 2
7.1.1 Facility Name 2
7.1.2 Facility Location 2
7.1.3 Owner 2
7.2 Emergency Response Organization 3
7.2.1 Building Emergency Director/Emergency Coordinator 3
7.3 Circumstances Prompting Implementation 3
7.3.1 Facility Hazards 4
7.3.1.1 Hazardous Materials 5
7.3.1.2 Industrial Hazards 6
7.3.1.3 Radioactive, Dangerous, and Mixed Waste 6
7.3.2 Response to Facility Operations Emergencies 7
7.3.2.1 Facility Operations Emergencies 7
7.3.2.1.1 Loss of Utilities 7
7.3.2.1.1.1 Loss of Electrical Power 8
7.3.2.1.1.2 Loss of Water 8
7.3.2.1.1.3 Loss of Ventilation 8
7.3.2.1.1.4 Loss of Process or Instrument Air 9
7.3.2.1.2 Major Process Disruption/Loss of Plant Control 9
7.3.2.1.3 Pressure Release 9
7.3.2.1.4 Fire and (or) Explosion 10
7.3.2.1.5 Hazardous Material, Dangerous and/or Mixed Waste Spill 10
7.3.2.1.6 Transportation and (or) Packaging Incidents 11
7.3.3 Natural Phenomena 11
7.3.3.1 Seismic Event 11
7.3.3.2 Volcanic Eruption or Ash Fall 11
7.3.3.3 High Winds or Tornadoes 11
7.3.3.4 Flood 11
7.3.3.5 Range Fire 12
7.4 Emergency Response Procedures 12
7.4.1 Incident Response, Hazard Assessment, and Identification 12
7.4.2 Notification 12
7.4.3 Containment and Control of Emergencies 12
7.4.4 Protective Actions 12
7.4.4.1 Evacuation 13
7.4.4.2 Take Cover 13
7.4.5 Identification of Dangerous Materials 13

7.4.5.1 Damaged or Unacceptable Shipments 15
7.4.6 Prevention of Recurrence or Spread of Fires, Explosions, or Releases 15
7.4.7 Post-Emergency Actions 15
7.4.7.1 Termination of Event 16
7.4.7.2 Incident Recovery and Restart of Operations 16
7.5 Emergency Equipment 17
7.5.1 Communications Equipment/Warning Systems 17
7.5.2 Portable Emergency Equipment 18
7.5.3 Communications Equipment 18
7.5.4 Personal Protective Equipment 18
7.5.5 Spill Control and Containment Supplies 19
7.5.6 Incident Command Post 19
7.6 Coordination Agreements 20
7.7 Evacuation Plan 20
7.8 Required Reports, Recordkeeping, and Certifications 20
7.8.1 General Requirements 20
7.8.2 Requirements For Tank Systems 20
7.9 Plan Locations and Amendment to Contingency Plan 20
7.10 References 21

Appendices

Appendix-7-1 Hanford Site Evacuation Routes 22
Appendix-7-2 WTP Site Evacuation Routes 25

Tables

Table 7.5-1 Fixed Emergency Equipment 17
Table 7.5-2 Portable Emergency Equipment 18
Table 7.5-3 Communications Equipment 18
Table 7.5-4 Personal Protective Equipment 19
Table 7.5-5 Spill Kits and Spill Control Equipment 19

Figures

Figure App-7-1 Hanford Site Evacuation Routes 24
Figure App-7-2 WTP Site Evacuation Routes 26

This page intentionally left blank.

Chapter 7.0 Contingency Plan

The contingency plan requirements provided in Washington Administrative Code (WAC) 173-303-350, *Contingency Plan and Emergency Procedures*, are satisfied in portions of the following documents:

- *River Protection Project - Waste Treatment Plant (RPP-WTP) Emergency Response Plan* (Appendix 7A of this document).
- *Hanford Emergency Management Plan* (DOE/RL-94-02 1999)*(Attachment 4 of the Dangerous Waste Portion of the Resource Conservation and Recovery Act (RCRA) Permit for the Treatment, Storage, and Disposal of Dangerous Waste)(Ecology 1994a)*

A detailed outline of the Emergency Response Plan was provided to meet Compliance Schedule Item 5. A final Emergency Response Plan will be provided prior to receipt of waste to demonstrate compliance with WAC-173-303-340, Preparedness and Prevention; WAC-173-303-350, Contingency Plan and Emergency Procedures; and WAC-173-303-360, Emergencies.

The *RPP-WTP Emergency Response Plan* also serves to satisfy a broad range of other requirements (e.g., *Occupational Safety and Health Administration Standards* [29 CFR 1910], *Toxic Substance Control Act of 1976* [40 CFR 761], and United States Department of Energy Orders). Therefore, revisions made to portions of this contingency plan document that are not governed by the requirements of WAC 173-303 will not be considered as a modification subject to WAC 173-303-830 or Hanford Facility Dangerous Waste Permit, Condition I.C.3.

Table 7-1 identifies which portions of the *RPP-WTP Emergency Response Plan* are written to meet WAC 173-303 contingency plan requirements. In addition to the *RPP-WTP Emergency Response Plan* portions identified in Table 7-1, Section 12.0 of the *RPP-WTP Emergency Response Plan* is written to meet WAC 173-303 requirements identifying where copies of the *Hanford Emergency Management Plan* and the *RPP-WTP Emergency Response Plan* are maintained on the Hanford Facility. Therefore, revisions to Section 12.0 and the portions identified in Table 7-1 are considered a modification subject to WAC 173-303-830 or Hanford Facility Dangerous Waste Permit, Condition I.C.3.

7.1 General Facility Information

The Hanford Tank Waste Treatment and Immobilization Plant (WTP) will be a dedicated treatment plant that will treat mixed waste transferred from the US Department of Energy (DOE), Office of River Protection (ORP) Double-Shell Tank System Unit at the Hanford Site. The WTP is located on the Hanford Site, a 560-square-mile (1,450-square kilometer) DOE site in southeastern Washington State. The WTP is located in the east portion of the 200 Area near the center of the Hanford Site.

The Hanford Site Emergency Preparedness Program is based on the incident command system (ICS) that allows a graded approach for response to emergency events. This plan contains a description of WTP facility specific emergency planning and response and is used in conjunction with the *Hanford Emergency Management Plan* (DOE/RL-94-02). Response to events is performed using WTP and ~~(or)~~ Hanford Site level emergency procedures. A revised and updated contingency plan will be submitted at least 18 months before the start of cold commissioning, when all information necessary for emergency planning is available. The plan will be updated to incorporate additional WTP facilities as they are completed and become operational.

7.1.1 Facility Name

US Department of Energy Hanford Site
~~River Protection Project~~ – Waste Treatment Plant

7.1.2 Facility Location

Benton County, Washington, within the 200 East Area.

Buildings and facilities covered by this plan are as follows:

- Pretreatment Facility (PTF)
- Low-Activity Waste (LAW) Facility
- High-Level Waste Facility (HLW)
- Balance of Facilities (e.g., support buildings)
- Analytical Laboratory (Lab)
- Effluent Management Facility

7.1.3 Owner

United States Department of Energy
Office of River Protection
P.O. Box 450
Richland, Washington 99352

Facility Manager:

Bechtel National, Inc.

2435 Stevens Center Pl.
Richland, Washington 99354

7.2 Emergency Response Organization

The Emergency Response Organization (ERO), as described in this section and in Section 2.2 of DOE/RL-94-02, is available 24 hours each day to respond to events at the plant. The Building Emergency Director (BED) is prepared to carry out his or her duties immediately and whenever an imminent or actual emergency exists, as required by *Washington Administrative Code* (WAC) 173-303-360 (2)(a), (b), and (c). DOE/RL-94-02, Section 2.2.1, details the responsibilities of the BED. An on-duty BED will be the designated primary BED. A designated alternate BED will also be available on each shift. Other ERO personnel will be on duty with either primary or alternate responsibilities. A BED, Incident Command Post (ICP) Hazards Communicator, ICP Communicator, and a Hazards Assessor (chemical or radiological, or both, depending on the event) will staff the ERO along with various BED support personnel. In addition, the BED will designate a plant operations specialist to support the Hanford Fire Department (HFD) personnel.

7.2.1 Building Emergency Director/Emergency Coordinator

Emergency response will be directed by the BED, as the Emergency Coordinator, until the Incident Commander (IC) arrives. The Incident Command System (ICS) staff with supporting on call personnel then fulfill the responsibilities of the Emergency Coordinator as discussed in WAC 173-303-360. During events, facility personnel perform response duties under the direction of the BED. The Incident Command Post (ICP) is managed by either the senior Hanford Fire Department member present on the scene or senior Hanford Patrol member present on the scene (security events only). These individuals are designated as the IC and as such, have the authority to request and obtain any resources necessary for protecting people and the environment. The BED becomes a member of the ICP and functions under the direction of the IC. In this role, the BED continues to manage and direct facility operations.

A listing of BEDs by title, work location, and work telephone numbers will be inserted in the Building Emergency Plan when issued prior to operations. The BED is located at the WTP (current locations are not determined at this time) or available through an “on-call” list 24 hours a day.

Names and home telephone numbers of the BEDs will be available from the Patrol Operations Center (POC) prior to operations, in accordance with Permit Condition II.A.4.

7.3 Circumstances Prompting Implementation

This plan will be implemented when the BED has determined that a release, fire, or explosion has occurred at the facility or in adjacent site facilities. Actions determined in DOE/RL-94-02 and the requirements of WAC 173-303 will be implemented as described below.

The BED ensures that trained personnel identify the character, source, amount, and aerial extent of the release, fire, or explosion to the extent possible. Waste identification is made by activities that can include, but are not limited to the following:

- Visual inspection of involved containers
- Sampling activities in the field

- Reference to inventory records
- Consulting with facility personnel

~~Samples of materials involved in an emergency may be taken by qualified personnel and analyzed as appropriate. These activities will be performed with a sense of immediacy and will include available information.~~

The BED will use the following guidelines to determine if an event has met the requirements of WAC 173-303-360(2)(d):

1 The event involved an unplanned spill, release, fire, or explosion,

AND

2 a The unplanned spill or release involved a dangerous waste, or the material involved became a dangerous waste as a result of the event (e.g., product that is not recoverable), or

2 b The unplanned fire or explosion occurred at the WTP or transportation activity subject to the *Resource Conservation and Recovery Act of 1976* (RCRA) contingency planning requirements,

AND

3 Time-urgent response from an emergency services organization was required to mitigate the event, or a threat to human health or the environment exists.

As soon as possible, after stabilizing event conditions, the BED will determine in consultation with the Environmental Organization if notification to the Washington State Department of Ecology (Ecology) is needed to meet WAC 173-303-360(2)(d) reporting requirements. Additional information is found in Permit Attachment 4 and DOE/RL-94-02, Section 4.2.

If review of all available information does not yield a definitive assessment of the danger posed by the incident, a worst-case condition will be presumed and appropriate protective actions and notifications will be initiated. The BED will be responsible for initiating any protective actions based on their best judgment of the incident.

The BED will assess each incident to determine the response necessary to protect personnel, facility, and the environment. If assistance from Hanford Patrol, HFD, or ambulance units is required, the Hanford Emergency Response Number (911 from site office phones or 373-0911 from cellular phones) will be used to contact the Patrol Operations Center and request the desired assistance. ~~To request other resources or assistance from outside the WTP, the Patrol Operations Center business number is 509-373-3800.~~

7.3.1 Facility Hazards

Chemical and radiological hazards will be present in the WTP operating facilities. In addition, while construction is ongoing, dangerous wastes will be generated that are typical of construction, consisting mostly of ignitable materials (e.g., spent solvents, waste fuels), corrosives (acids and bases), and toxic materials, which are packaged in various-sized US Department of Transportation containers for shipment to permitted, offsite treatment and disposal facilities. The WTP Project has established accumulation areas for these construction-type wastes. Prior to facilities becoming operational, this plan will be updated to reflect additional hazards information.

7.3.1.1 Hazardous Materials

The WTP maintains and manages a chemical Safety Data System (SDS) database on a real time basis and can be queried to provide a list of all chemicals on site meeting the criteria for further evaluation. Chemicals used at the WTP Construction Site are evaluated in accordance with procedures that will be developed prior to the receipt of waste. During the chemical evaluation, if the product has a 3 or 4 on a the health hazard rating (National Fire Protection Agency or Hazardous Materials Identification System [NFPA or HMIS]) or contains a chemical that is listed on the Superfund Amendments and Reauthorization Act (SARA) Extremely Hazardous Substance (EHS) list 302, it is sent to the Emergency Management Administrator for evaluation.

A list of chemicals meeting the listed criteria above can be generated using the WTP SDS ~~SOS~~ database ~~(Dolphin)~~ at any time to provide the most up to date list. In addition, 24590-WTP-RPT-CON-03-001, Rev 6, Emergency Planning Hazards Survey provides a brief summary of chemicals that will be evaluated for future WTP Operations.

Chemicals that meet the following criteria are excluded from further consideration if they meet one or more of the criteria:

Public Use - Commonly available to and used by the general public (if the formulation and is the same as for products that are distributed without significant restrictions to the public.)

Dispersible - Materials that do not present an airborne exposure hazard due to its physical form or other factors. Materials may be eliminated if they meet one of the following tests:

- The substance is a solid at normal temperatures and does not contain or include a significant fraction of small particles readily dispersible (less than I0 microns in diameter).
- No plausible release mechanism/process by which a large fraction of a solid material can be reduced to small particles for dispersion and inhalation (less than I0 microns in diameter).
- The substance is a liquid and exhibits a vapor pressure (or partial pressure of a hazardous material in solution) of less than 11 mmHg at about 25 degrees Celsius

Human Health Hazard - Materials that have been assigned a NFPA health hazard category rating (or a health hazard rating assigned locally using the criteria published in NFPA 704) of 0, 1, or 2.

Quantity - Individual container quantities smaller than those "easily and safely manipulated by one person (i.e., "laboratory scale" quantities). As used here, containers with capacities of no more than 5 gallons (19 L) for liquids, 40 pounds (18 kg) for solids or 10 pounds (4.5 kg) for compressed gases meet such a definition. Note that this threshold is used as a final screening criterion for material that could not be screened out using any of the other criteria above.

Currently the WTP chemical screening process identified no hazardous chemicals having an NFPA or HMIS hazard rating of 3 or 4 that require an Emergency Planning Hazard Assessment (EPHA) to be completed. Future chemical use for operational activities and processes will be evaluated when established.

7.3.1.2 Industrial Hazards

Industrial hazards associated with the WTP Site include electrical equipment, pressurized equipment and systems, high temperature equipment, rotating equipment, confined spaces, forklifts, cranes, lifting operations, and compressed gas cylinders.

Safe design of the plant, job safety analysis, job control system work packages, and SDSs provide the basis for the safe use of this equipment in the workplace. Personnel will be trained in the safe use and handling of compressed gas cylinders, cranes, forklifts etc., as applicable.

7.3.1.3 Radioactive, Dangerous, and Mixed Waste

Safe design of the plant, job safety analysis, job control system work packages, and ~~M~~SDSs provide the basis for safe handling of radioactive, dangerous, and mixed waste.

Dangerous waste categories managed at the WTP will be identical to the double-shell tank farms when tank waste treatment commences. Categories include characteristic, listed, and state-only wastes, two of which are designated as extremely hazardous waste (WT01 and WP01). The following summarizes the dangerous waste numbers:

~~Table 7-1 Hanford Facility Documents Containing Contingency Plan Requirements of WAC 173-303-350(3)~~**Characteristic Waste Numbers**

D001	D002	D003	D004
D005	D006	D007	D008
D009	D010	D011	D018
D019	D022	D028	D029
D030	D033	D034	D035
D036	D038	D039	D040
D041	D043		
Listed Waste Numbers			
F001	F002	F003	F004
F005	F039[a]		
State-only Wastes[b]			
WT01	WT02	WP01	WP02

a Multi-source leachate (F039) is included as a waste derived from non-specific wastes F001 through F005.
b Washington State criteria

The WTP will use the following types of permitted dangerous waste management units:

- Storage in containers
- Treatment and storage in tanks
- Treatment in miscellaneous units (e.g., the melters)
- Containment buildings
- Miscellaneous Units

~~• Treatment and storage in tanks~~

~~When WTP becomes operational, the following additional dangerous waste management units will be used:~~

- ~~Treatment in miscellaneous units (e.g., melters, evaporator)~~

Solid Form

Radioactive, dangerous, and mixed wastes may be generated at the WTP during process and maintenance activities. Any waste generated will be properly managed in a designated accumulation area(s) and transported to a permitted storage area. Temporary SAAs and/or 90-day pads may also be used during an event if necessary and will be regulated in accordance with WAC 173-303-200(2).

Liquid Form

Highly radioactive mixed waste solutions may be present at the WTP operating facilities. Although these solutions and slurries contain chemicals that are hazardous, the bounding consequence for spills or releases of this waste is usually based on the radiological components of the waste.

Gaseous Form

The WTP airborne effluent streams are produced through the following:

- Radiological control area heating ventilation air conditioning (HVAC) system – exhaust from radiological controlled areas.
- Vessel off-gas systems – vapors and gases from these systems.

The off-gas systems remove particulate, condensate NOx, and organic vapors from the air stream before discharging them to the radiological controlled area HVAC system. The combined air stream passes through high efficiency particulate air filtration and is monitored for radioactivity and chemicals.

7.3.2 Response to Facility Operations Emergencies

Depending on the severity of the event, the BED reviews the site-wide procedures and the WTP emergency response procedure(s) and, as required, categorizes and/or classifies the event. If necessary, the BED initiates area protective actions and Hanford Site ERO activation. The steps identified in the following description of actions do not have to be performed in sequence because of the unanticipated sequence of incident events.

7.3.2.1 Facility Operations Emergencies

7.3.2.1.1 Loss of Utilities

A case-by-case evaluation is required for each event to determine loss of utility impacts. When a BED determines a loss of utility impact, actions are taken to ensure dangerous and/or mixed waste is being properly managed to the extent possible given event circumstances. As necessary, the BED will stop operations and take appropriate actions until the utility is restored.

7.3.2.1.1.1 Loss of Electrical Power

Should there be a partial or total loss of electrical power to the WTP; automatic measures ensure the plant is in a safe operational configuration. (Safe operational configuration is defined as a shutdown to minimal operations that will prevent releases and prevent unnecessary damage to the equipment.)

The emergency power system will consist of two diesel turbine- automatically controlled emergency diesel generators and one diesel engine standby generator. The automatic and standby generators are connected to three separate 4.16kV emergency switchgears. Upon loss of power the emergency diesel turbine generators will automatically start. The emergency diesel turbine generators are capable of starting, accelerating, and being loaded with the design load in a specified time limit. The standby diesel generator is started manually or automatically in the event of a prolonged loss of offsite power. The emergency power system will be connected to essential loads in order to ensure only a short-term power interruption for those loads designated as essential. Critical indications and controls are backed up by uninterruptible power supplies and batteries. The plant will remain in a safe condition during loss of electrical power.

Egress lighting will consist of self-contained fixtures with battery packs and charging systems. These lighting systems will be located in stairways, exit routes and fire alarm stations and will come on automatically upon loss of normal power to the fixture. A selected part of the normal lighting will operate as essential lighting, and will provide a minimum level of illumination throughout the plant to aid in restoring the plant to normal operation. Essential lighting will be powered by the EPS and will be available after an offsite power loss, following a delay required to start the emergency power supply diesel generators and for the generators to pick up the essential loads.

Selected instrumentation and controls will also be powered by an un-interruptible power supply (UPS) system and therefore will be unaffected by a loss of offsite power. UPS systems will be battery backed, and the battery chargers will be connected to the EPS. Radiation monitors, such as Continuous Air Monitors (CAMs) and area 1 radiation monitors, are also powered by the UPS systems and continue operating during power failure.

7.3.2.1.1.2 Loss of Water

Upon loss of the raw water system, operations will be restricted. Upon loss of potable water chemical operations will be terminated until safety showers and eyewash stations are available. Upon loss of the fire suppression system, the plant will be placed in a safe configuration, and corrective actions will be implemented.

7.3.2.1.1.3 Loss of Ventilation

A cascade ventilation system is used at the WTP in conjunction with physical building containment features to confine transferable radioactive contamination in the event of an accidental release, spill, or system failure. The ventilation system is designed to maintain building differential pressures so air will flow from areas of lesser contamination potential to areas of greater contamination potential through containment boundary penetrations such as engineered air gaps and air in-bleed ductwork.

The WTP is divided into numbered zones with the higher number indicating the greater hazard potential and therefore the greater degree of control/restriction required. Radiation (R1 to R5) and contamination

(C1 to C5) zones are classified independently in order to differentiate between the need for shielding or confinement.

Supply air in C2 areas flows via C3 to the C5 areas, where it will be discharged by the C5 exhaust fans. In some instances, the airflow will flow from the C2 areas to the C3 areas, where it will be discharged by the C3 exhaust fans. Some C2 air flow will be directly exhausted. Upon loss of the ventilation system, restoration of the C3 and C5 exhaust fans will be immediately attempted. If the C3 and C5 exhaust fans cannot be restored immediately, the C2 supply fans are automatically stopped, and personnel may be notified to evacuate C3 areas, as a precautionary measure.

The BED and either the ERO or the IC will take the following actions:

- Locate the source of the problem, and take steps necessary to control the event
- Ensure appropriate areas have been evacuated
- Monitor contamination levels in the plant
- Restore ventilation system

7.3.2.1.1.4 Loss of Process or Instrument Air

The process air system will use redundant air compressors. One will be in operation and the other(s) will be in autostart mode. If the standby compressor fails to start on loss of the operating compressor, a backup compressor will be started locally.

7.3.2.1.2 Major Process Disruption/Loss of Plant Control

A major process disruption or loss of plant control could be caused by a failure of the process control system. A system condition that causes loss of the process control system could cause plant abnormalities that would lead to increased radiological challenges to WTP protection systems.

Non-essential personnel will exit the area of WTP where the system condition has occurred. The system condition will be assessed, and corrective actions will be implemented. Operations will be placed on recirculation by securing the waste feed to the plant. Facility shutdown will be accomplished by performing manual, localized actions such as system isolation, equipment shutdown, etc.

7.3.2.1.3 Pressure Release

The WTP has high-pressure steam and low-pressure compressed air and steam systems. Loss of the compressed air or steam system or systems could result in loss of plant control or a process disruption. Process disruption or loss of plant control could interrupt operations. However, it is not likely that this event would be classified as an emergency.

Pressurized gases are used throughout the WTP. In addition, compressed gas cylinders will be stored in the compressed gas storage area. The inventory of gases includes flammable and nonflammable gases. These gases pose a hazard in the immediate storage area, or in the immediate area of the location being used. Failure of compressed gas bottles could cause flying debris hazards.

A process system pressure release is categorized as a condensate spray release.

7.3.2.1.4 Fire and (or) Explosion

In the event of a fire, the discoverer activates a fire alarm; calls 911 from site office phones/373-0911 from cellular phones or verifies that 911 has been called. Automatic initiation of a fire alarm (by the smoke detectors, sprinkler systems, or pull boxes) is also possible.

- Unless otherwise instructed, personnel shall evacuate the area/building by the nearest safe exit and proceed to the designated staging area for accountability.
- On actuation of the fire alarm, ONLY if time permits, personnel should shut down equipment, secure waste, and lock up classified materials (or hand carry them out). The alarm automatically signals the Hanford Fire Department.
- The BED proceeds directly to the ICP, obtains all necessary information pertaining to the incident, and sends a representative to meet Hanford Fire Department.
- The BED provides a formal turnover to the IC when the IC arrives at the ICP.
- The BED informs the Hanford Site ERO as to the extent of the emergency (including estimates of dangerous waste, mixed waste, or radioactive material quantities released to the environment).
- If operations are stopped in response to the fire, the BED ensures that systems are monitored for leaks, pressure buildup, gas generation, and ruptures.
- Hanford Fire Department firefighters extinguish the fire as necessary.

The following is representative of the type of information that the BED may be called upon to provide to the incident command structure or other response agencies:

- Location and health of personnel, including missing personnel and possible locations for fire fighters to search for them
- Location and severity of fire, including character, exact source, and the amount, area, and extent of any released materials
- Known hazardous conditions (such as, radiological, non-radiological, electrical, thermal, flammable materials, pressurized cylinders, toxic gas, pressure systems, batteries, radiation areas)
- Plant operating status
- Utility systems status
- Support for WTP radiological control personnel (that is, monitoring, surveys, sampling,
- decontamination)
- WTP layout
- Support for firefighter activities as required
- Notifications as required in accordance with plant procedures and Hanford Emergency
- Management Plan (DOE/RL-94-02),

NOTE: Following a fire and/or explosion, WAC 173-303-640(7) will be addressed for the WTP regarding fitness for use.

7.3.2.1.5 Hazardous Material, Dangerous and/or Mixed Waste Spill

Dangerous waste or mixed waste could spill due to equipment failure or operator error. The severity of the event would depend on the nature and quantity of the spill. In addition, the presence of process chemicals could result in a spill of hazardous materials, due to equipment failure or operator error. ~~The~~

~~severity of the event would be dependent on the nature and quantity of the spill.~~ See section 7.4 of this document for details on responding to incidents.

7.3.2.1.6 Transportation and (or) Packaging Incidents

A transportation or packaging event involving hazardous chemicals or radioactive material could result in personnel exposure to hazardous materials. Potential environmental damage could occur due to the release of hazardous or radioactive materials.

7.3.3 Natural Phenomena

The WTP operating facilities are being designed such that it will not fail under a design basis event. Therefore, natural phenomena events are not expected to cause structural damage to these facilities, which would constitute an emergency, or cause a release to the environment. However, the following natural phenomena that have the potential to cause conditions that are beyond the facility design basis are discussed: a beyond design basis seismic event, high winds, volcanic eruption and ash fall, a flood, a range fire, and an aircraft crash.

7.3.3.1 Seismic Event

Depending on the magnitude of the beyond design basis event, severe structural damage can occur, resulting in serious injuries or fatalities and the release of hazardous materials to the environment. Damaged electrical circuits and wiring could result in the initiation of fires.

7.3.3.2 Volcanic Eruption or Ash Fall

Though not expected to cause structural damage, the ash resulting from a volcanic eruption could cause shorts in electrical equipment and plug ventilation system filters.

7.3.3.3 High Winds or Tornadoes

High winds defined as sustained winds above a threshold that would potentially or actually cause significant structural damage to the facility are not expected to occur. (Significant structural damage is interpreted to mean a breach of facility containment and confinement systems sufficient to cause an actual or potential release of hazardous material to the environment). However, dirt and dust from windstorms could cause shorts in electrical equipment, or could plug ventilation system filters. Disruption of normal operations is possible.

7.3.3.4 Flood

The 200 Area is well above projected flood elevations for the Columbia and Yakima Rivers; therefore, a flood is not considered a credible natural event for the WTP. The grading and drainage features that are provided ensures that precipitation, even from a downpour, would infiltrate the ground or drain off toward the Columbia River without significant flooding. The WTP is not sited in a wetlands or coastal high-hazard area.

7.3.3.5 Range Fire

The hazards associated with a range fire are similar to those associated with a building fire plus potential site access restrictions and travel hazards such as poor visibility. Smoke and ash from a range fire can also cause shorts in electrical equipment, or plug ventilation system filters. Disruption of normal operations is possible.

7.4 Emergency Response Procedures

7.4.1 Incident Response, Hazard Assessment, and Identification

The initial response to any emergency is to immediately protect the health and safety of people in the affected area. Identification of released material is essential to determine appropriate protective actions. Containment, treatment, and disposal assessment are secondary responses.

The following sections describe the process for implementing basic protective actions as well as descriptions of response actions for the events listed in Section 7.3 of this plan. DOE/RL-94-02, Section 1.3, provides concept of operations for emergency response on the Hanford Site. Site-specific procedures are detailed in *RL Emergency Plan Implementing Procedures* (DOE-0223) and DOE/RL-94-02, Section 1.3.3.2. will be used as necessary for hazard assessment and identification of hazards. Facility specific actions will be denoted in WTP Building Emergency Plan (BEP).

7.4.2 Notification

As soon as possible after stabilizing event conditions, the BED will determine in consultation with the Environmental Organization if notification to Ecology is needed to meet WAC 173-303-360(2)(d) reporting requirements. Additional information regarding requirements for appropriate notifications is found in Permit Attachment 4 and DOE/RL-94-02, Section 4.2.

7.4.3 Containment and Control of Emergencies

Site-specific procedures are detailed in RL Emergency Plan Implementing Procedures (DOE-0223) and will be used as necessary for the containment and control of emergencies. Facility specific actions will be denoted in WTP Building Emergency Plan (BEP).

7.4.4 Protective Actions

Depending on the severity of the event, the BED reviews the site-wide and WTP emergency response procedure(s) and, as required, categorizes and (or) classifies the event. If necessary, the BED initiates area protective actions and Hanford Site ERO activation. The steps identified in the following description of actions do not have to be performed in sequence because of the unanticipated sequence of incident events.

The following emergency signals will be used to initiate emergency response:

- Evacuation - steady siren
- Take cover - wavering siren
- Fire - gong/bell

Protective action responses are discussed in the following sections. The steps identified in the description of actions do not have to be performed in sequence because of the unanticipated sequence of incident events.

7.4.4.1 Evacuation

The objective of a facility evacuation order is to limit personnel exposure to hazardous materials or dangerous/mixed waste by increasing the distance between personnel and the hazard. The scope of the evacuation includes evacuation of the facility due to an event at the facility as well as evacuation of the facility in response to a site evacuation order. Evacuation is directed by the BED when conditions warrant and applies to all personnel not actively involved in the event response or in emergency plan related activities.

The BED initiates the evacuation by directing an announcement be made to evacuate along with the evacuation location over the public address system and facility radios. Personnel proceed to a predetermined staging area (see Figure App-7-2 WTP Site Evacuation Routes), or other safe upwind location, as determined by the BED. The BED determines the operating configuration of the facility and identifies any additional protective actions to limit personnel exposure to the hazard.

Emergency organization personnel or assigned operations personnel conduct a sweep of occupied buildings to ensure that all personnel and visitors have evacuated. For an immediate evacuation, accountability is performed at the staging area. The BED assigns Personnel Accountability Aides (PAAs) and Staging Area Managers (SAMs) with the responsibility to ensure that evacuation actions are taken at WTP. When evacuation actions are complete, the aides/managers provide a status report to the BED. The BED provides status to the IC.

7.4.4.2 Take Cover

The objective of the take cover order is to limit personnel exposure to hazardous or dangerous/mixed waste when evacuation is inappropriate or not practical. Evacuation might not be practical or appropriate because of extreme weather conditions or the material release might limit the ability to evacuate personnel safely.

The BED initiates the take cover by directing an announcement be made over the public address system and facility radios, and, as conditions warrant, by activating the 200 Area take cover alarms by calling the POC using 373-3800. Protective actions associated with operations include configuring, or shutting down, the ventilation systems. Determination of additional take cover actions is based on operating configuration, weather conditions, amount and duration of release, and other conditions, as applicable to the event and associated hazard. As a minimum, personnel exposure to the hazard is minimized. The BED assigns personnel as accountability aides with responsibility to ensure that take cover actions are taken at all occupied buildings (take cover locations at WTP). When take cover actions are complete, the PAAs provide the BED with a status report.

7.4.5 Identification of Dangerous Materials

The WTP has engineering controls to contain and/or minimize spills. These controls include containment berms, dedicated spill control sumps, remote leak detection systems, remote gauges and level indicators. The WTP operating procedures will provide alarm response and maintenance actions for leak detection equipment, surveillance of possible leak locations, and response actions for detected spills.

Spills can result from many sources including process leaks, container spills or leaks, damaged packages or shipments, or personnel error. Spills of mixed waste are complicated by the need to deal with the extra hazards posed by the presence of radioactive materials.

The following actions will be taken in response to a spill or release of hazardous material, dangerous and (or) mixed waste:

The person discovering a spill will immediately:

Stops work
Warns others in the vicinity
Isolates the area, so others do not wander into the hazard
Minimizes exposure by moving upwind (if outside) or to another area (if indoors)

- The discoverer notifies the BED and provides details, including size of spill, location, quality, and item spilled.
- The BED determines if emergency conditions exist requiring response from the HFD based on classification of the spill, injured personnel, and evaluates need to perform additional protective actions.
- If HFD resources are not needed, the spill is mitigated with resources identified and proper notifications are made.
- If the HFD resources are needed, the BED calls 373-0911 and requests emergency services.
- The BED sends a representative to meet the HFD.
- The BED provides a formal turnover to the IC when the IC arrives.
- The BED informs the Hanford Site ERO as to the extent of the emergency (including estimates of dangerous waste, mixed waste, or radioactive material quantities released to the environment).
- If operations are stopped in response to the spill, the BED ensures that systems are monitored for leaks, pressure buildup, gas generation, and ruptures.
- The HFD stabilizes the spill.

As necessary, the BED will also initiate or arrange for the following and ensure all personnel involved follow the guidance from Hanford Emergency Management Plan (DOE/RL-94-02 1999):

- Notify plant personnel of the spill or release by making an announcement over the public address system and facility radios.
- Establish a control point at a safe location, and coordinate further spill mitigation activities.
- Notify the contractor Environmental Point of Contact for support.
- Obtain all available information pertaining to the event, evaluate the need for event categorization or classification, and begin ERO activation as necessary.
- Initiate use of plant and emergency response procedures.
- Arrange for care of any injured persons.
- Maintain access control at the event site by keeping unauthorized personnel and vehicles away from the area. Security personnel can be used to assist in site control. In determining which areas are to be controlled, the BED will consider environmental factors such as wind velocity and direction.
- Arrange for proper remediation of the event after evaluation, and if required, incident investigation processes have been initiated.
- Remain available for fire, patrol, and other authorities on the scene, and provide all required information.

- Enlist the assistance of alternate BED(s) or ERO personnel, if response activities are projected to be long term.
- Ensure the use of proper protective equipment, remedial techniques, transfer procedures and decontamination procedures by all involved personnel, if remediation is performed by plant personnel.
- Remain at the scene to oversee activities and provide information, if remediation is performed by the HFD Hazardous Materials (HAZMAT) Team or other response teams.
- Ensure proper containerization, packaging, and labeling of recovered spill materials.
- Ensure decontamination (or restocking) and restoration of emergency equipment used in the spill remediation before resuming operations.
- Provide required reports after the event in accordance with WTP procedures

Additional actions to be taken in response to a leaking tank include the following:

- Removal of the leaking tank from service.
- Conduct an investigation to determine the cause of the event.
- Perform repairs or replacements before the tank is returned to service—with, as required—final approval from an independent certified professional engineer.
- Following an emergency event involving a tank system, address all requirements of WAC 173-303-640(7) regarding fitness for use.

If a catastrophic dumping of mixed waste occurs, affected plants or processes will be immediately shut down. The actions described in Section 7.3 will be performed. If a catastrophic dumping causes a high radiation alarm on the C5 or C3 ventilation systems, the standby systems will be started, and actions described in Section 7.3.2.1.1.3 will be performed.

7.4.5.1 Damaged or Unacceptable Shipments

No waste will be received at the WTP from outside of the Hanford Site. Therefore, this section of the plan is not applicable.

7.4.6 Prevention of Recurrence or Spread of Fires, Explosions, or Releases

The BED, as part of the Incident Command System, takes the steps necessary to ensure that a secondary release, fire, or explosion does not occur. The BED will take measures, where applicable, to stop processes and operations, collect and contain released wastes and remove or isolate containers. The BED ensures monitoring for leaks, pressure buildups, gas generation, or ruptures in valves, pipes or other equipment, whenever this is appropriate.

Following a fire and (or) explosion, WAC 173-303-640(7) will be addressed for any tank systems that may have been affected regarding fitness for use.

7.4.7 Post-Emergency Actions

DOE/RL-94-02, Section 9, describes actions for event termination, incident recovery, and restart of operations. The extent by which these actions are employed is based on the incident classification of each event. In addition, DOE/RL-94-02 also contains actions for management of incompatible wastes that might apply.

Equipment used during an incident is decontaminated (if practicable) or disposed of as spill debris. Decontaminated equipment is checked for proper operation before storage for subsequent use. Consumable and disposed materials are restocked. Fire extinguishers are replaced.

The BED ensures that equipment used during the incident is cleaned and fit for its intended use before operations are resumed. Depleted stocks of neutralizing and absorbing materials are replenished.

7.4.7.1 Termination of Event

Hanford Emergency Management Plan (DOE/RL-94-02), Section 9.0, describes actions for

event termination, incident recovery, and restart of operations. The extent by which these actions are employed is based on the incident classification of each event. In addition, Hanford Emergency Management Plan (DOE/RL-94-02) also contains actions for the management of incompatible wastes that might apply.

For events where the RL-EOC is activated, the RL and DOE Office of River Protection Emergency Manager has the authority to declare event termination. This decision is based on input from the BED, IC, and other emergency response organization members. For events where the RL-EOC is not activated, the ICS and staff will declare event termination.

7.4.7.2 Incident Recovery and Restart of Operations

A recovery plan is developed when necessary in accordance with DOE/RL-94-02, Section 9.2. A recovery plan is needed following an event where further risk could be introduced to personnel, the facility, or the environment through recovery action and (or) to maximize the preservation of evidence.

If the emergency response is implemented in accordance with Section 4 of this plan, Ecology will be notified before operations can resume. This notification is in addition to the required reports discussed in Section 5.1 of DOE/RL-94-02 and will include the following statements:

- There are no incompatibility issues with the waste and released materials from the incident
- All the equipment has been cleaned, fit for its intended use, and placed back into service

The notification required by WAC 173-303-360(2)(j) may be made via telephone conference and documentation of the notification will be included in the WTP operating record. Additional information that Ecology requests regarding these restart conditions will be included in the required 15-day report identified in Section 7.8 of this plan and required by WAC 173-303-360(2)(k).

For emergencies not involving activation of the RL-EOC, the BED ensures that conditions are restored to normal before operations are resumed. If the Hanford Site ERO was activated and the emergency phase is complete, a special recovery organization could be appointed at the discretion of RL to restore conditions to normal. This process is detailed in RL and contractor emergency procedures. The makeup of this organization depends on the extent of the damage and the effects. The onsite recovery organization will be appointed by the appropriate contractor's management.

After an event, the BED or the onsite recovery organization ensures that no waste that might be incompatible with the released material is treated, stored, and (or) disposed of until cleanup is completed

pursuant to WAC 173-303-360(2)(j). Cleanup actions are taken by WTP personnel or other assigned personnel. DOE/RL-94-02, Section 9.2.3, describes actions to be taken.

Waste from cleanup activities is designated and managed as newly generated waste. A field check for compatibility is performed before storage, as necessary. Incompatible wastes are not placed in the same container. Waste containers are placed in approved storage areas appropriate for their compatibility class.

If incompatibility of waste was a factor in the incident, the BED or the onsite recovery organization ensures that the cause is corrected.

7.5 Emergency Equipment

Hanford Site emergency resources and equipment are described and listed in DOE/RL-94-02, Appendix C. Emergency resources and equipment for the entire WTP are presented in this section.

~~7.1.1~~7.5.1 Communications Equipment/Warning Systems

Table 7.5-1 lists the fixed emergency equipment available at the WTP.

Table 7.5-1 Fixed Emergency Equipment

Type	Location	Capability
Safety shower/eye wash station	Throughout the WTP in locations designated by facility procedures.	Assist in flushing chemicals and materials from body or eyes and face.
Automatic sprinkler system	Throughout the WTP.	Assist in the control of fire.
Fire alarm pull boxes	Throughout the WTP.	Activate the building fire alarm and notify fire department, as developed by Coordination Agreements.
Emergency diesel generators	East of the LAW Facility.	Provide emergency power.
Fire hose connections	Throughout the WTP in locations designated by facility procedures.	Allow for connection of fire hoses to site water system for manual fire suppression.

~~7.1.2~~7.5.2 Portable Emergency Equipment

Table 7.5-2 lists the portable emergency equipment available at the WTP.

Table 7.5-2 Portable Emergency Equipment

Type	Location	Capability
General purpose fire extinguishers	Throughout the WTP.	Fire suppression for class A, B, and C fires.
CO_2 or clean-agent fire extinguishers	Throughout the WTP.	Suppress electrical fires.
Miscellaneous emergency equipment	Throughout the facility located in emergency equipment cabinets as designated by facility procedures.	Safety harnesses, blankets, first aid kits, stretchers, emergency lights, and emergency tools.

7.5.3 Communications Equipment

Table 7.5.3 lists communications and warning systems at the WTP.

Table 7.5-3 Communications Equipment

Type	Location	Capability
Siren System Evacuation STEADY SIREN Take Cover WAVERING SIREN Fire GONG/BELL	Throughout the WTP.	Alert facility personnel of emergency conditions.
Public address system	Throughout the WTP.	Provides for information dissemination to facility personnel.
Telephone system	WTP CCR, office areas, and other plant locations.	Internal and external communications.
Portable two-way radios	Throughout the WTP.	Communications to the CCR.

7.5.4 Personal Protective Equipment

Table 7.5-4 lists types of protective equipment available at the WTP.

Table 7.5-4 Personal Protective Equipment

Type	Location	Capability
• Waterproof coveralls Leather protective wear • Respirators • Filtered masks • Oxygen supplies • Escape packs • SCBAs	Throughout the facility in or near emergency equipment cabinets as designated by facility procedure.	Protection from various hazards (e.g., smoke, fumes, oxygen deficient atmosphere, chemicals, high airborne radioactivity concentrations, and radiological contamination)

SCBA = self-contained breathing apparatus.

7.5.5 Spill Control and Containment Supplies

Table 7.5-5 lists the locations of spill kits and includes a basic listing of contents.

Table 7.5-5 Spill Kits and Spill Control Equipment

Type	Location	Capability
Absorbents and spill response materials 55-gal drums Overpack drums Bags Step-off pads Protective clothing Chemical resistant coveralls Surgical and chemical gloves Acid Goggles/Face shields Sodium-bicarbonate Barrier Tape Rags Scissors Flashlight Batteries pH paper Mop handles Mop heads Mop bucket with wringer Hazardous material labels Non-sparking shovel Hazardous absorbent booms Ear plugs Portable barriers	Throughout the facility in or near spill kit cabinets as designated by facility procedures.	Control and mitigation of radioactive and chemical spills.

7.5.6 Incident Command Post

If the ICP is activated, the BED will notify appropriate personnel of its location by either the public address system, radios, or telephones. Emergency resource materials are stored at each location. The IC could activate the Hanford Fire Department Mobile Command Unit if necessary.

The ICP will contain the following:

- Telephone communications, (including speakerphones and headsets) including the Hanford Site Emergency Alerting System (HSEAS)
- Radio communications
- Access to the public address system
- Access to plant operations data
- Access to plant systems information
- Access to accountability and building access control information

7.6 Coordination Agreements

RL has established a number of coordination agreements, or memoranda of understanding with various agencies to ensure proper response resource availability for incidents involving the Hanford Site. A description of the agreements is contained in DOE/RL-94-02, Section 3, Table 3-1.

7.7 Evacuation Plan

Figure App-7-1 and Figure App-7-2 shows the evacuation routes for the Hanford Site and WTP Facility. Evacuation routing maps for the WTP will be maintained in the facility operating record and provide identification of the primary staging area and a general layout of the facility. Alternate evacuation routes and staging areas will be determined and used on a case-by-case basis, and based on meteorological conditions at the time of an event.

7.8 Required Reports, Recordkeeping, and Certifications

Post incident written reports are required for certain incidents on the Hanford Site. The reports are described in DOE/RL-94-02, Section 5.1.

7.8.1 General Requirements

Facility management will note in the WTP operating record, the time, date, and details of any incident that requires implementation of the contingency plan (refer to Section 7.3 of this plan). Within fifteen (15) days after the incident, a written report on the incident will be submitted to Ecology. The report will include all items specified in WAC 173-303-360(2)(k).

7.8.2 Requirements For Tank Systems

If a release from a tank system occurs that requires notification according to WAC 173-303-640 (7), notification as described in WTP procedures will be followed.

7.9 Plan Locations and Amendment to Contingency Plan

Copies of this Contingency plan are maintained at the following locations:

- WTP ICP
- WTP Control Room

Portions of the plan will be reviewed and immediately amended if necessary when conditions described in DOE/RL-94-02, Section 14.3.1.1, occur. In addition, the plan will be revised prior to operation of additional WTP facilities. This will include information that is not currently available. Subsequently, the plan will be reviewed annually and updated as needed.

7.10 References

DOE/RL-94-02, Hanford Emergency Management Plan, as amended

WAC 173-303, Washington State Dangerous Waste Regulations, Washington Administrative Code, Washington State Department of Ecology, Olympia, Washington, as amended

Ecology, 2011, Dangerous Waste Portion of the Hanford Facility Resource Conservation and Recovery Act Permit for the Treatment, Storage, and Disposal of Dangerous Waste, Permit Number WA7890008967, Washington State Department of Ecology, Olympia, Washington, as amended

DOE-0223, Emergency Plan Implementing Procedures

24590-WTP-RPT-CON-03-001, Rev 6, Emergency Planning Hazards Survey

Appendix-7-1

Hanford Site Evacuation Routes

Figure App-7-1 Hanford Site Evacuation Routes

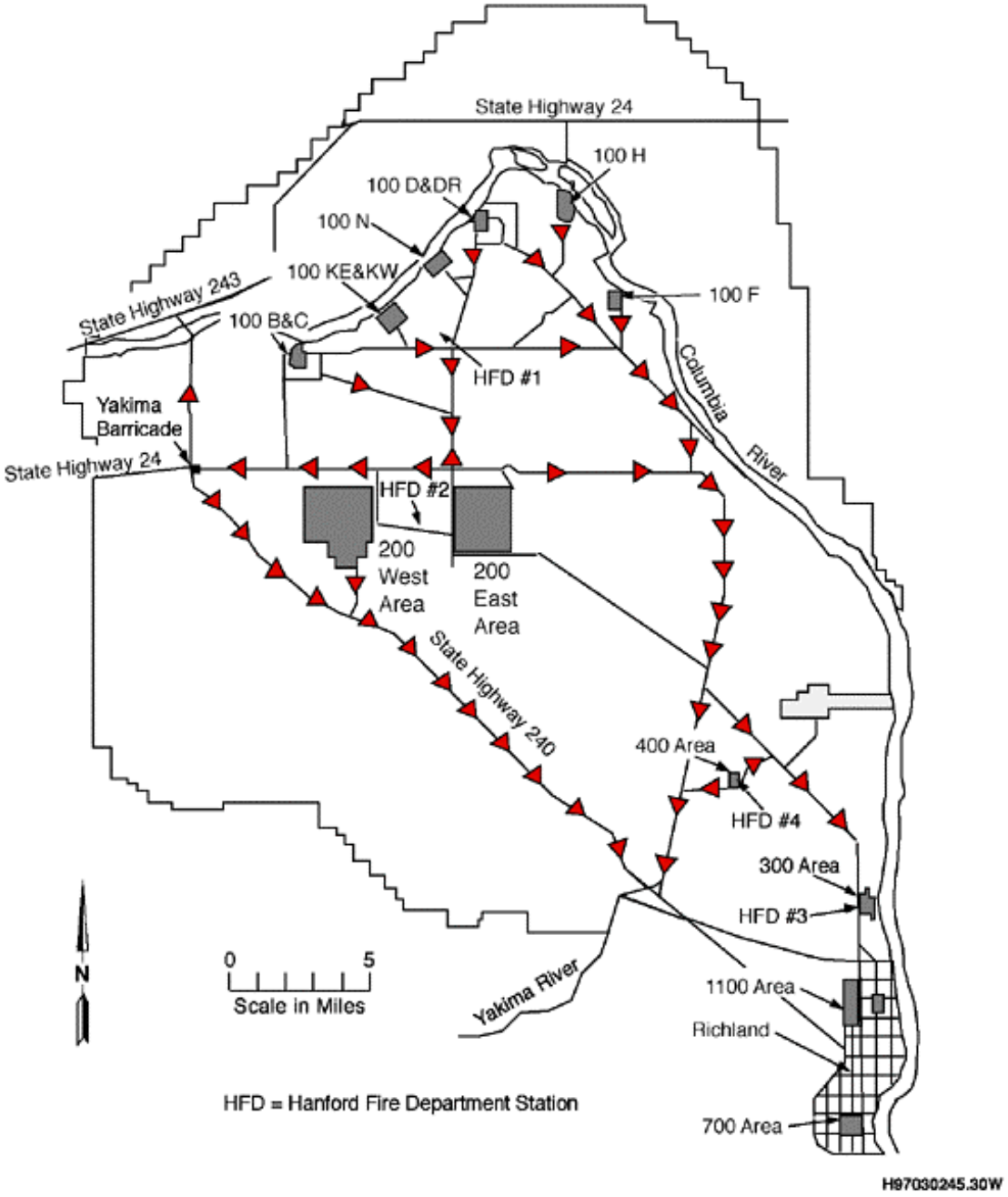

Appendix-7-2

WTP Site Evacuation Routes

Figure App-7-2 WTP Site Evacuation Routes

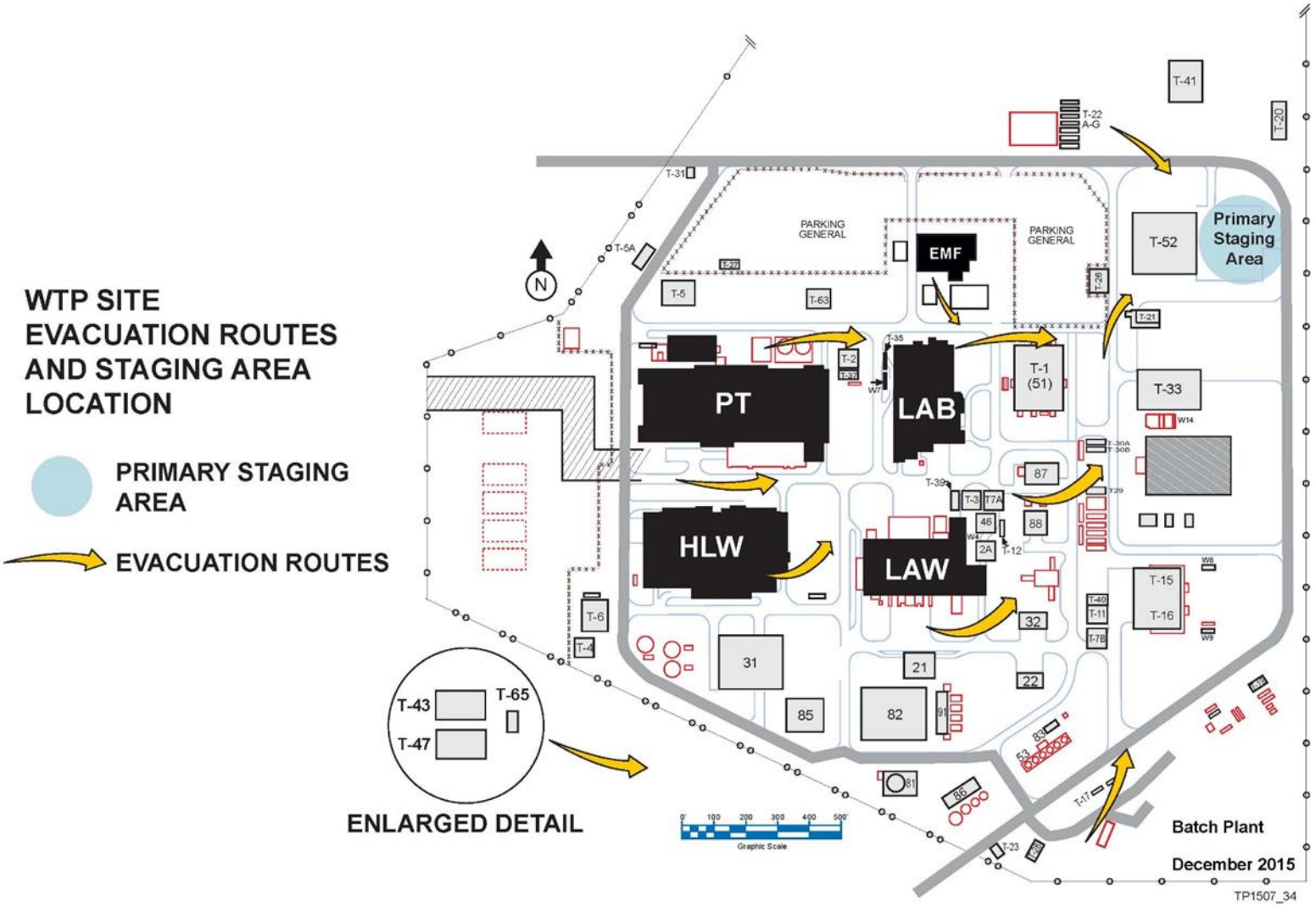

Appendix 7A

Emergency Response Plan

This page intentionally left blank.

APPENDIX 7A
EMERGENCY RESPONSE PLAN

Contents

1.0 General Information 10-7A-1
1.1 Facility Name 10-7A-1
1.2 Facility Location 10-7A-1
1.3 Owner 10-7A-1
1.4 Description of the Waste Treatment Plant Facility and Operations 10-7A-2
1.5 Building Evacuation Routing 10-7A-3
2.0 Purpose 10-7A-10
3.0 Waste Treatment Plant Emergency Response Organization 10-7A-10
3.1 Building Emergency Director 10-7A-10
3.2 Other Members 10-7A-11
4.0 Implementation of the Plan 10-7A-11
5.0 Facility Hazards 10-7A-12
5.1 Hazardous Materials 10-7A-12
5.2 Industrial Hazards 10-7A-13
5.3 Radioactive, Dangerous, and Mixed Waste 10-7A-13
5.4 Criticality 10-7A-15
6.0 Potential Emergency Conditions 10-7A-15
6.1 Facility Operations Emergencies 10-7A-15
6.1.1 Loss of Utilities 10-7A-15
6.1.2 Major Process Disruption/Loss of Plant Control 10-7A-16
6.1.3 Pressure Release 10-7A-16
6.1.4 Fire and/or Explosion 10-7A-16
6.1.5 Hazardous Material Spill 10-7A-16
6.1.6 Dangerous/Mixed Waste Spill 10-7A-16
6.1.7 Transportation and /or Packaging Incidents 10-7A-16
6.1.8 Radiological Waste Release 10-7A-17
6.1.9 Criticality 10-7A-17
6.2 Natural Phenomena 10-7A-17
6.2.1 Seismic Event 10-7A-17
6.2.2 Volcanic Eruption/Ash fall 10-7A-17
6.2.3 High Winds/Tornadoes 10-7A-17
6.2.4 Flood 10-7A-18
6.2.5 Range Fire 10-7A-18

6.2.6 Aircraft Crash 10-7A-18

6.3 Security Contingencies 10-7A-18
6.3.1 Bomb Threat/Explosive Device 10-7A-18
6.3.2 Hostage Situation/Armed Intruder 10-7A-18
6.3.3 Suspicious Object 10-7A-18

7.0 Incident Response 10-7A-19

7.1 Protective Action Responses 10-7A-19
7.1.1 Evacuation 10-7A-19
7.1.2 Take Cover 10-7A-20

7.2 Response to Facility Operations Emergencies 10-7A-21
7.2.1 Loss of Utilities 10-7A-21
7.2.2 Major Process Disruption/Loss of Plant Control 10-7A-23
7.2.3 Pressure Release 10-7A-23
7.2.4 Fire and/or Explosion 10-7A-24
7.2.5 Hazardous Material, Dangerous and/or Mixed Waste Spill 10-7A-25
7.2.6 Radiological Material Release 10-7A-27
7.2.7 Criticality 10-7A-27

7.3 Prevention of Recurrence or Spread of Fires, Explosions, or Releases 10-7A-27

7.4 Response to Natural Phenomena 10-7A-27
7.4.1 Seismic Event 10-7A-27
7.4.2 Volcanic Eruption/Ash fall 10-7A-28
7.4.3 High Winds/Tornadoes 10-7A-28
7.4.4 Flood 10-7A-29
7.4.5 Range Fire 10-7A-29
7.4.6 Aircraft Crash 10-7A-29

7.5 Security Contingencies 10-7A-29
7.5.1 Bomb Threat/Explosive Device 10-7A-29
7.5.2 Hostage Situation/Armed Intruder 10-7A-29
7.5.3 Suspicious Object 10-7A-30

8.0 Termination of Event, Incident Recovery, and Restart of Operations 10-7A-30

8.1 Termination of Event 10-7A-30

8.2 Incident Recovery and Restart of Operations 10-7A-30

8.3 Incompatible Waste 10-7A-31

8.4 Post Emergency Equipment Maintenance And Decontamination 10-7A-31

9.0 Emergency Equipment 10-7A-32

9.1 Fixed Emergency Equipment 10-7A-32

9.2 Portable Emergency Equipment 10-7A-32

9.3 Communications Equipment/Warning Systems 10-7A-33

9.4 Personal Protective Equipment 10-7A-33

9.5 Spill Control and Containment Supplies 10-7A-34
9.6 Incident Command Post 10-7A-34
10.0 Coordination Agreements 10-7A-35
11.0 Required Reports 10-7A-35
12.0 Plan Location and Amendments 10-7A-35
13.0 Facility Emergency Response Organization 10-7A-36
14.0 References 10-7A-36

Tables

Table 7A-1 Locations of Dangerous Waste Management Units 10-7A-8
Table 7A-2 Fixed Emergency Equipment 10-7A-32
Table 7A-3 Portable Emergency Equipment 10-7A-32
Table 7A-4 Communications Equipments 10-7A-33
Table 7A-5 Personal Protective Equipment 10-7A-33
Table 7A-6 Spill Kits and Spill Control Equipment 10-7A-34
Table 7A-7 WTP BEDs 10-7A-36

Figures

Figure 7A-1 Location of the WTP on the Hanford Site 10-7A-4
Figure 7A-2 WTP Site Layout 10-7A-6
Figure 7A-B-1 Hanford Site Evacuation Routes 10-7A-B-2

Appendices

Appendix 7A-A List of Emergency Response Procedures 10-7A-A-1
Appendix 7A-B Evacuation Routes 10-7A-B-1

This page intentionally left blank.

1.0 GENERAL INFORMATION

The Waste Treatment and Immobilization Plant (WTP) will be a dedicated treatment plant that will treat mixed waste transferred from the United States Department of Energy, Richland Operations Office (DOE-RL) Double-Shell Tank System Unit at the Hanford Site. The WTP is located on the Hanford Site, a 560-square-mile (1,450-square kilometer) United States Department of Energy (DOE) site in southeastern Washington State. The WTP is located in the East portion of the 200 Area near the center of the Hanford Site. Figures 7A-1 and 7A-2 show the location of the WTP with respect to the Hanford Site and the 200 East Area of the Hanford Site.

The Hanford Site Emergency Preparedness Program is based on the incident command system that allows a graded approach for response to emergency events. This plan contains a description of WTP facility specific emergency planning and response and is used in conjunction with *Hanford Emergency Management Plan* (DOE/RL-94-02). Response to events is performed using WTP and/or Hanford Site level emergency procedures.

This plan is being issued to meet permitting requirements. This plan will be updated to provide additional necessary information prior to the introduction of bulk quantities of hazardous chemicals into the WTP.

1.1 FACILITY NAME

United States Department of Energy Hanford Site
Waste Treatment and Immobilization Plant

1.2 FACILITY LOCATION

Benton County, Washington, within the 200 East Area.

Facilities covered by this plan are:

- Pretreatment Facility (PTF)
- Analytical Laboratory (Lab)
- Low-Activity Waste Facility (LAW)
- High-Level Waste Facility (HLW)
- Balance of Facilities (BOF) (e.g., support buildings)

1.3 OWNER

United States Department of Energy
Office of River Protection
P.O. Box 450
Richland, Washington 99352

Facility Manager:

Bechtel National, Inc.
2435 Stevens Center Place
Richland, Washington 99354

1.4 DESCRIPTION OF THE WTP FACILITY AND OPERATIONS

The WTP will be composed of a pretreatment facility that includes the waste receipt tanks, an analytical laboratory, two vitrification facilities, and an assortment of other support facilities collectively referred to as the Balance of Facility (BOF). Figure 7A-3 shows the layout of the WTP, with the major buildings identified.

The WTP will receive waste from the double-shell tank (DST) system located in the 200 Area of the Hanford Facility. The waste to be treated meets the regulatory definition of "radioactive high level waste" referred to in the Land Disposal Restriction Treatment Standards (40 CFR 268.40). The WTP will pretreat the tank waste by separating the waste into Low Activity Waste (LAW) feed and High Level Waste (HLW) feed. After separating the waste into two feed streams, the waste will be piped to the vitrification facilities; LAW and HLW to be immobilized in a glass matrix. The vitrification process involves mixing waste feed with glass-forming materials, pouring the mixture into a melter, heating until it is liquefied, pouring it into stainless steel containers (called canisters), and then welding on a lid after each canister finishes cooling.

The canisters of immobilized HLW will remain on the Hanford Site until a permanent repository is available. The immobilized LAW, containing relatively small amounts of radioactive material, will be disposed of on the Hanford Site.

The air emissions (off-gas) from the pretreatment and vitrification processes will be treated to ensure safe levels before being released to the atmosphere. Air emissions are regulated by the Washington State Departments of Ecology and Health, and the United States Environmental Protection Agency, and will be treated to a level protective of human health and the environment. The WTP will discharge air emissions through four primary stacks, one each for pretreatment, LAW facility, HLW facility, and the laboratory.

The WTP will use the following four types of permitted dangerous waste management units:

- Storage in containers
- Treatment and storage in tanks
- Treatment in miscellaneous units (the melters)
- Containment buildings

The locations of these dangerous waste management units are summarized in Table 7A-1.

The buildings used for treating and storing waste will be constructed of reinforced concrete and structural steelwork. Below-grade portions of buildings will be reinforced concrete construction, and the superstructure will be made of reinforced concrete and structural steelwork with a metal roof. The plant structure will be supported by a reinforced concrete mat foundation.

Except for two outdoor on-ground storage tanks surrounded by a concrete berm for secondary containment, all other tanks and treatment processes managing dangerous waste will be located inside buildings. Container storage areas will be located in buildings or covered storage areas. Where floors and walls provide secondary containment they will either be lined with stainless steel, a protective coating, or a combination of both. The WTP dangerous waste management units will be equipped with leak detection systems and inspected regularly.

The waste and off-gas treatment processes will generate "secondary wastes," such as used equipment, laboratory waste, and other chemically and radiologically contaminated materials. (These "newly generated wastes" also are referred to as "miscellaneous wastes"). Secondary waste will either be transferred elsewhere in the WTP for treatment or transferred to another permitted treatment, storage, or disposal (TSD) facility. Non-radiological dangerous waste may also be generated by laboratory and maintenance activities. Such waste will be managed in containers at the WTP until it can be transferred to a permitted TSD facility.

The three primary processes at the WTP (pretreatment, LAW vitrification, and HLW vitrification) and the LAB are supported by BOF systems and utilities. The BOF will include support systems and utilities required for the waste treatment processes within the main process areas (pretreatment, LAW vitrification, and HLW vitrification). The BOF support systems and utilities will include, but not be limited to, heating and cooling, process steam, process water, chilled water, and compressed air.

1.5 BUILDING EVACUATION ROUTING

Figure 7A-1 shows evacuation routes for the Hanford Site. Identification of the primary and secondary staging areas, a general layout of the evacuation routes and evacuation routes for each of the primary buildings which comprise the WTP will be provided in a revision of this document before the introduction of bulk quantities of hazardous chemicals into the WTP. These evacuation routes will be placed in Appendix 7A-B. Alternate evacuation routes will be used on a case-by-case basis, based on meteorological conditions at the time of an event.

Figure 7A-1 Location of the WTP on the Hanford Site

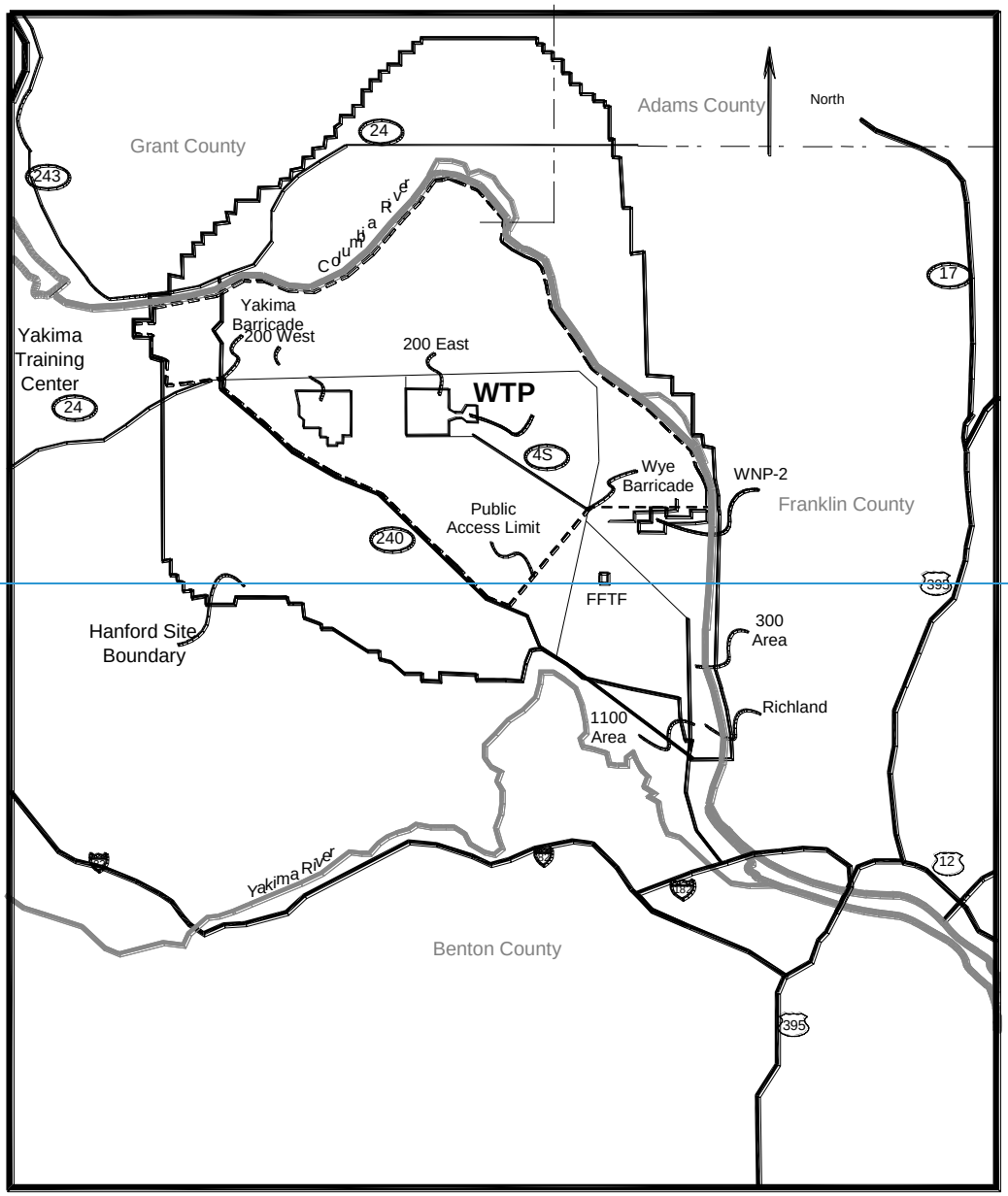

This page intentionally left blank.

Figure 7A-2 WTP Site Layout

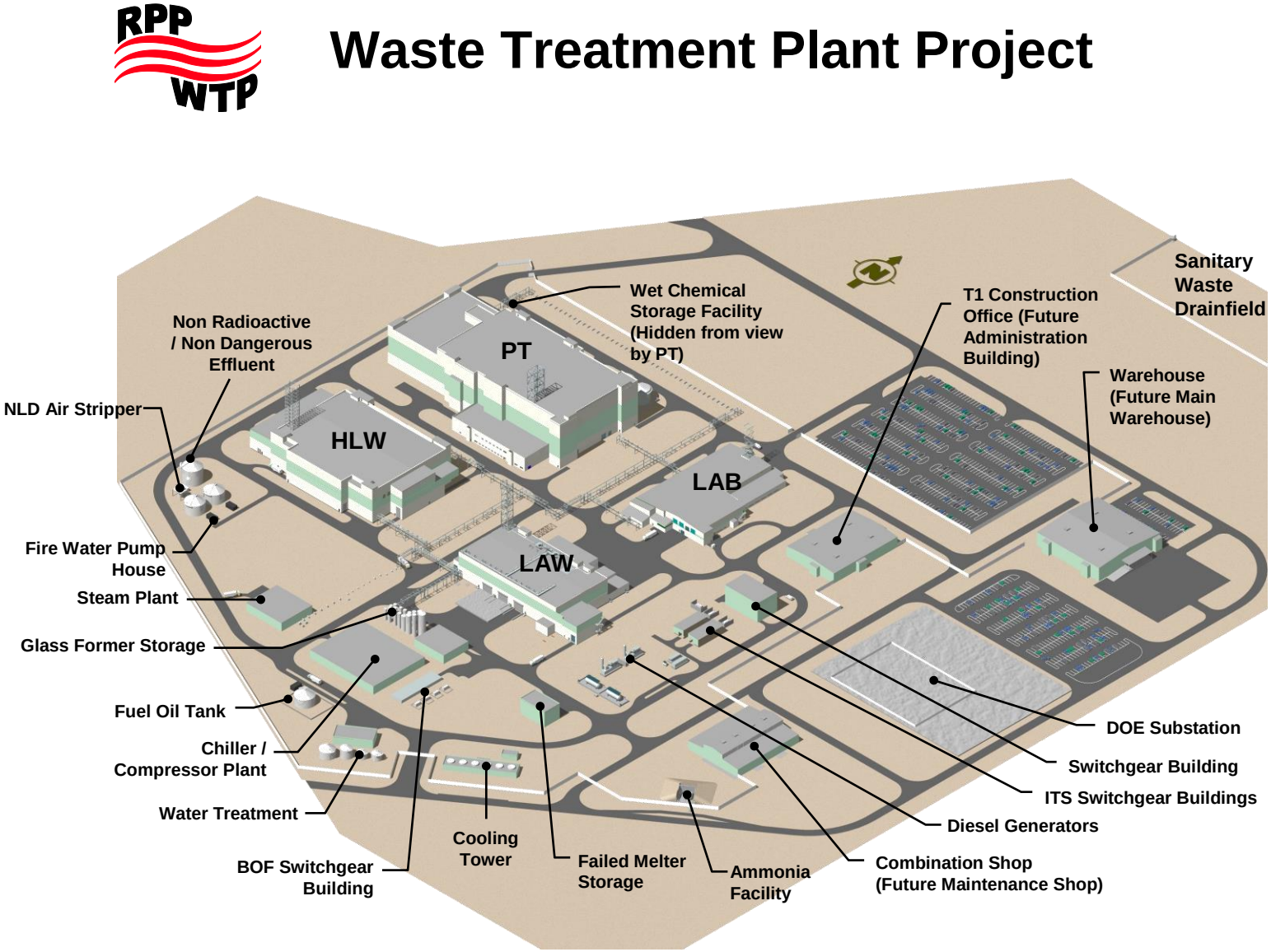

This page intentionally left blank.

1

Table 7A-1 Locations of Dangerous Waste Management Units

Dangerous Waste Management Unit	General Location
Container Storage Areas (see Chapter 4.0, Tables 4-1 and 4-7)	Immobilized LAW (ILAW) storage in LAW Facility.
	Immobilized HLW (IHLW) storage in HLW Facility
	Miscellaneous secondary waste container storage in pretreatment facility, LAW Facility, HLW Facility, and failed melter storage areas.
Tank Systems (see Chapter 4.0, Tables 4-1 through 4-5)	Pretreatment Facility tank systems
	• Cesium nitric acid recovery process (CNP)
	• Cesium ion exchange process (CXP)
	• Waste feed receipt process (FRP)
	• Waste feed evaporation process (FEP)
	• HLW Lag Storage and Feed Blending Process (HLP)
	• Treated LAW Concentrate Storage Process (TCP)
	• Treated LAW Evaporation Process (TLP)
	• Spent Resin Collection and Dewatering Process (RDP)
	• Radioactive Liquid Waste Disposal (RLD)
	• Plant Wash and Disposal (PWD)
	• Ultrafiltration Process (UFP)
	• Pretreatment Vessel Vent Process (PVP)
	• Pretreatment In-Cell Handling (PIH)
	• LAW intermediate waste storage in pretreatment facility
	• HLW feed receipt in pretreatment facility
	• HLW ultrafiltration in pretreatment facility
	LAW facility tank systems
	• LAW Concentrate Receipt Process (LCP)
	• LAW Melter Feed Process (LFP)
	• LAW Primary OffgasProcess System (LOP)
	• LAW Secondary Offgas/Vessel Vent Process System (LVP)
	• Radioactive Liquid Waste Disposal System (RLD)
	HLW facility tank system

Table 7A-1 Locations of Dangerous Waste Management Units

Dangerous Waste Management Unit	General Location
	• HLW Melter Feed Process System (HFP)
	• HLW Vit Primary Offgas Treatment System /Process Vessel Vent System (HOP/PVV)
	• HLW Canister Decontamination Handling (HDH)
	• Radioactive Liquid Waste Disposal System (RLD)
	• HLW Melter Cave Support Handling System (HSH)
	LAB tank system:
	• Radioactive Liquid Waste Disposal System (RLD)
Miscellaneous Thermal Treatment Units (melters) (see Chapter 4, Table 4-3)	HLW melter (2 used) in HLW facility
	LAW melters (2 used) in LAW facility
Containment Buildings (see Chapter 4, Table 4-7)	Pretreatment hot cells, maintenance areas, filter cave, and air filters handling areas.
	LAW locally shielded melter gallery, container finishing, consumable import/export, pour cave, ILAW buffer container storage, and C3 workshops.
	HLW melter caves, pour tunnels, canister handling, canister swabbing and monitoring, waste handling area, C3 workshops, drum swabbing and monitoring, and filter cave.

2.0 PURPOSE

This plan describes both the facility hazards and the basic responses to upset and/or emergency conditions within the WTP. These events may include spills or releases caused by equipment failure during processing, fires and explosions, transportation activities, movement of materials, packaging, storage of hazardous materials, and natural and security contingencies. When used in conjunction with *Hanford Emergency Management Plan* (DOE/RL-94-02), this plan meets the requirements for contingency planning as required by WAC 173-303. Sections 1.5, 3.1, 4.0, 7.1, 7.1.1, 7.1.2, 7.2, 7.2.1, 7.2.2, 7.2.3, 7.2.4, 7.2.5, 7.2.5.1, 7.3, 8.2, 8.3, 8.4, 9.0, 9.1, 9.2, 9.3, 9.4, 9.5, 9.6, 11.0, 12.0, 13.0 of this plan are enforceable sections meeting Resource Conservation and Recovery Act (RCRA) contingency planning requirements. Enforceable sections cannot be changed without coordinating the change with the Site-wide Permit modification process.

3.0 WTP EMERGENCY RESPONSE ORGANIZATION

The WTP Emergency Response Organization (ERO), as described in this section and in Section 2.2 of the *Hanford Emergency Management Plan* (DOE-RL-94-02, 2006), will be available 24 hours each day to respond to events at the plant. The Building Emergency Director (BED) will be prepared to carry out his or her duties immediately and whenever an imminent or actual emergency exists, as required by *Washington Administrative Code* (WAC) 173-303-360 (2)(a), (b), and (c). The *Hanford Emergency Management Plan* (DOE-RL-94-02, 2006), Section 2.2.1, details the responsibilities of the BED. The on-duty Pretreatment shift operations manager will be the designated primary BED. A designated alternate BED will be available on each shift. Other ERO personnel will be on duty with either primary or alternate responsibilities. A BED, Incident Command Post (ICP) Hazards Communicator, ICP Communicator, and a Hazards Assessor (chemical or radiological, or both, depending on the event) will staff the ERO along with various BED support personnel. In addition, the BED will act as the plant operations specialist for the Hanford Fire Department (HFD) personnel.

3.1 BUILDING EMERGENCY DIRECTOR

Emergency response will be directed by the BED until the Incident Commander (IC) arrives. The incident command system (ICS) and staff, with supporting on-call personnel, fulfill the responsibilities of the Emergency Coordinator as discussed in WAC 173-303-360. During events, WTP personnel perform response duties under the direction of the BED. The ICP is managed by either the senior Hanford Fire Department member present or senior Hanford Patrol member present on the scene (security events only). These individuals are designated as the IC and as such, have the authority to request and obtain any resources necessary for protecting people and the environment.

The BED becomes a member of the ICP and functions under the direction of the IC. In this role, the BED continues to manage and direct WTP operations.

A listing of primary and alternate BEDs by title, work location and work telephone number is contained in Section 13.0 of this plan. The BED will be on the premises or will be available through an "on-call" list 24-hours-a-day. Names and home telephone numbers of the BEDs will be available from the Patrol Operations Center (POC), in accordance with Site-wide Permit, General Condition II.A.3.

3.2 OTHER MEMBERS

As a minimum, facility management appoints and ensures training is provided to individuals to perform as Personnel Accountability Aides and Staging Area Managers. The Personnel Accountability Aides are responsible for facilitating the implementation of protective actions (evacuation or take cover) and for facilitating the accountability of personnel after the protective actions have been implemented. Staging Area Managers are responsible for coordinating and conducting activities at the staging area. In addition, the BED can identify additional support personnel (radiological control, maintenance, engineering, hazardous material coordinators, etc.) to be part of the WTP Emergency Response Organization as necessary.

The complete WTP Emergency Response Organization listing of positions, names, work locations and telephone numbers will be maintained in a separate location in a format determined appropriate by WTP management. Copies will be distributed to appropriate WTP locations and to the Hanford Emergency Operations Center.

4.0 IMPLEMENTATION OF THE PLAN

This plan will be implemented when the BED has determined that a release, fire, or explosion has occurred at the facility or in adjacent site facilities. Actions determined in *Hanford Emergency Management Plan* (DOE/RL-94-02) and the requirements of WAC 173-303 will be implemented as described below.

The BED ensures that trained personnel identify the character, source, amount, and aerial extent of the release, fire, or explosion to the extent possible. Identification of waste can be made by activities that can include, but are not limited to: visual inspection of involved containers, sampling activities in the field, reference to inventory records, or by consulting with facility personnel.

Samples of materials involved in an emergency may be taken by qualified personnel and analyzed as appropriate. These activities will be performed with a sense of immediacy and will include available information.

The BED will use the following guidelines to determine if an event has met the requirements of WAC 173-303-360(2)(d):

1 The event involved an unplanned spill, release, fire, or explosion,

AND

2 a The unplanned spill or release involved a dangerous waste, or the material involved became a dangerous waste as a result of the event (e.g., product that is not recoverable.), or

2 b The unplanned fire or explosion occurred at the WTP or transportation activity subject to RCRA contingency planning requirements,

AND

3 Time-urgent response from an emergency services organization was required to mitigate the event, or a threat to human health or the environment exists.

As soon as possible, after stabilizing event conditions, the BED will determine, in consultation with the WTP environmental single-point-of-contact, if notification to Ecology is needed to meet WAC-173-303-360 (2)(d) reporting requirements. If all of the conditions under 1, 2, and 3 are met, notifications are to be made to Ecology. Additional information is found in *Hanford Emergency Management Plan* (DOE/RL-94-02), Section 4.2.

If review of all available information does not yield a definitive assessment of the danger posed by the incident, a worst-case condition will be presumed and appropriate protective actions and notifications will be initiated. The BED is responsible for initiating any protective actions based on his best judgment of the incident.

The BED will assess each incident to determine the response necessary to protect the personnel, facility, and the environment. If assistance from Hanford Patrol, Hanford Fire Department, or ambulance units is required, the Hanford Emergency Response Number (911) will be used to contact the POC and request the desired assistance. To request other resources or assistance from outside the WTP, the POC business number is used (509-373-3800).

5.0 FACILITY HAZARDS

Chemical and radiological constituent hazards that could occur at the WTP will be identified and evaluated in the hazards assessment required by the *Hanford Emergency Management Plan* (DOE-RL-94-02, 2006), Section 1.3.3.2. The objective of this section is to describe in a general manner the hazards that pose significant risks to human health or to the environment.

Prior to the implementation of this plan, before the introduction of bulk quantities of hazardous chemicals into the WTP, additional information will be provided in this section. Information to be provided will include the following:

- Updates on chemical and radiological hazards upon completion of the hazards assessment
- Updates based on the Draft Work Plan for Screening Level Risk Assessment for the WTP (BNFL Inc. 1999b)]

5.1 HAZARDOUS MATERIALS

Potentially hazardous materials are used for normal operations, maintenance, and support functions at the WTP. These materials could include acids, caustics, oils, diesel fuel, and solvents.

Material Safety Data Sheets (MSDSs) are provided in the control rooms, storage areas, and operating areas of the WTP.

The following is a representative list of the types of hazardous materials that will be stored and used in the WTP.

Nitric Acid
Sodium Hydroxide

Sodium Nitrate
Sodium Permanganate
Strontium Nitrate
Solvents
Urea

Safe design of the plant, Job Safety Analysis, Job Control System Work Packages, and MSDSs provide the basis for safe use of the materials in the workplace. Plant procedures and training that address these hazardous materials will be in place before the introduction of bulk chemicals into the plant. Employees who work with or handle hazardous wastes will be trained according to requirements identified in the *River Protection Project – Waste Treatment Plant Dangerous Waste Training Plan* (BNI, 2001a).

5.2 INDUSTRIAL HAZARDS

Industrial hazards associated with the WTP will include electrical equipment, pressurized equipment and systems, high temperature equipment, rotating equipment, confined spaces, forklifts, cranes, lifting operations, and compressed gas cylinders.

Safe design of the plant, Job Safety Analysis, Job Control System Work Packages, and MSDSs provide the basis for the safe use of this equipment in the workplace. Plant procedures that address these hazards will be in place prior to the implementation of this plan. Employees will be trained in the safe use and handling of compressed gas cylinders, cranes, forklifts etc as applicable.

5.3 RADIOACTIVE, DANGEROUS, AND MIXED WASTE

Safe design of the plant, Job Safety Analysis, and Job Control System Work Packages provide the basis for safe handling of radioactive, dangerous, and mixed waste. Plant procedures that address the management of these wastes will be in place prior to operation of the WTP.

Dangerous waste categories treated at the WTP will be identical to the Double-Shell Tank Farms. Categories include characteristic, listed, and state-only wastes, two of which are designated as extremely hazardous waste (WT01 and WP01). The following summarizes the dangerous waste numbers for the WTP.

Characteristic Waste Numbers

D001	D002	D003	D004
D005	D006	D007	D008
D009	D010	D011	D018
D019	D022	D028	D029
D030	D033	D034	D035
D036	D038	D039	D040
D041	D043		

Listed Waste Numbers

F001	F002	F003	F004
F005	F039[a]		

State-only Wastes[b]

WT01	WT02	WP01	WP02

a – Multi-source leachate (F039) is included as a waste derived from non-specific wastes F001 through F005.
b – Washington State criteria

The WTP will use the following four types of permitted dangerous waste management units:

- Storage in containers
- Treatment and storage in tanks
- Treatment in miscellaneous units (e.g., the melters)
- Containment buildings

Solid Form

Radioactive, dangerous, and mixed wastes will be generated at the WTP during sampling, decontamination, and maintenance activities. This waste will be accumulated in a designated accumulation area(s) and transported to a permitted storage area.

Liquid Form

Highly radioactive mixed waste solutions and slurries will be processed at the WTP and stored in the pretreatment facility, HLW facility, and LAW facility for further treatment. Although these solutions and slurries will contain chemicals that are hazardous, the bounding consequence for spills or releases of this waste is usually based on the radiological components of the waste.

Gaseous Form

Airborne effluent streams will be produced through the following:

- Radiological control area Heating Ventilation Air Conditioning (HVAC) system – exhaust from radiological controlled areas.
- Vessel off-gas systems – vapors and gases from tanks and process equipment including the melters.

The off-gas systems will remove particulate, condensate NO_x and organic vapors from the air stream before discharging them to the radiological controlled area HVAC system. The combined air stream will pass through HEPA filtration and will be monitored for radioactivity and chemicals.

5.4 CRITICALITY

Analyses have shown that there is no credible criticality event that can be postulated to occur at the WTP (BNI 2001b).

6.0 POTENTIAL EMERGENCY CONDITIONS

Potential emergency conditions, under both WAC 173-303 and the DOE, may include one of three basic categories: 1) operations (process upsets, fires and explosions, loss of utilities, spills, and releases), 2) natural phenomena (e.g., earthquakes), and 3) security contingencies (bomb threat, hostage situation, etc.). The following are conditions that may lead to an emergency at the WTP. For a summary of responses to emergency conditions see Section 7.2.

The results of the WTP hazards assessment will be used to update the information presented in this section.

6.1 FACILITY OPERATIONS EMERGENCIES

6.1.1 Loss of Utilities

6.1.1.1 Loss of Electrical Power

A loss of electrical power to the WTP is possible. The power will be provided to the WTP from two power transformers, supplied by two independent 230 kV transmission lines. The transformers will deliver a 13.8 kV secondary voltage for internal distribution at the plant. The plant loads will be divided into two load groups, normal, and alternate (Load Groups A and B).

6.1.1.2 Loss of Water

A loss of water, potable, raw or fire suppressant will not likely result in a plant emergency or evacuation of the WTP. Operations may be limited in order to minimize impact from the loss of water. A loss of water to the fire suppression system could result in a plant emergency, if a fire should develop.

6.1.1.3 Loss of Ventilation

A loss of ventilation could cause a change to plant operation and could require local evacuation of personnel if a loss of contamination control is suspected.

6.1.1.4 Loss of Process Air or Instrument Air

A loss of process air or instrument air could cause a change to plant systems but would not require implementation of personnel-protective actions.

6.1.2 Major Process Disruption/Loss of Plant Control

A major process disruption could be caused by a failure of the Process Control System (PCS). A loss of the PCS could cause plant abnormalities that would lead to increased radiological challenges to the WTP's protection systems.

6.1.3 Pressure Release

The WTP will have high-pressure steam and low-pressure compressed air and steam systems. Loss of the compressed air or steam system or systems could result in loss of plant control or a process disruption. Process disruption or loss of plant control could interrupt the treatment processes. However, it is not likely that this event would be classified as an emergency.

Pressurized gases will be used throughout the WTP. Additionally, compressed gas cylinders will be stored in the compressed gas storage area. The inventory of gases includes flammable and nonflammable gases. These gases pose a hazard in the immediate storage area, or in the immediate area of the location being used. Failure of compressed gas bottles could cause flying debris hazards. This condition is addressed in Section 6.1.4.

A process system pressure release is categorized as a condensate spray release. This condition is addressed in Section 6.1.5.

6.1.4 Fire and/or Explosion

A fire or explosion could generate highly toxic or corrosive fumes, or release of radioactive material. Flying debris might result from explosions or compressed gas cylinder failure. Process system disruption, loss of plant control, and breach of process system boundaries could result from the flying debris. In addition, heavy smoke could disrupt the operation of the ventilation system.

6.1.5 Hazardous Material Spill

Prior to the introduction of bulk quantities of hazardous chemicals into the WTP, this plan will be revised to include the types of hazardous materials that will be present, their locations, quantities, and characteristics. Additionally the potential effects from an accidental release of hazardous materials will be discussed.

6.1.6 Dangerous/Mixed Waste Spill

Dangerous waste or mixed waste could spill, due to equipment failure or operator error. The severity of the event would be dependent on the nature and quantity of the spill.

6.1.7 Transportation and /or Packaging Incidents

A transportation or packaging event involving hazardous chemicals, samples or radioactive material could result in personnel exposure to hazardous materials. Potential environmental damage could occur due to the release of hazardous or radioactive materials.

6.1.8 Radiological Waste Release

The WTP processes include large quantities of radioactive liquids and slurries. Radioactive waste could accumulate in various treatment systems. The plant has the potential for concentrating radioactive waste; therefore, responses for abnormal radiation levels and radioactive waste releases are included in the scope of emergency planning. The release could come as a result of either failure of the ventilation system or a catastrophic leak of mixed waste.

The ventilation system is designed to provide an air supply from areas of no contamination potential to areas of high contamination potential. Areas within the WTP are classified into one of three zones, C2, C3 and C5, according to their potential for radioactive contamination, with C5 having the highest potential for radioactive contamination. The C3 and C5 exhaust fans maintain a negative pressure in areas where radioactive contamination is most likely to occur.

Failure of the C3 or C5 exhaust fans could cause a reverse flow and cause a release of radioactive contamination.

6.1.9 Criticality

Analyses have shown that there is no credible criticality event that can be postulated to occur at the WTP (BNI 2001b).

6.2 NATURAL PHENOMENA

The WTP is designed such that it will not fail under a design basis event. Therefore, natural phenomena events are not expected to cause structural damage to the WTP, which would constitute an emergency, or cause a release to the environment. However, the following natural phenomena that have the potential to cause conditions which are beyond the facility design basis are discussed: a beyond design basis seismic event, high winds, volcanic eruption and ash fall, a flood, a range fire, and an aircraft crash.

6.2.1 Seismic Event

Depending on the magnitude of the beyond design basis event, severe structural damage can occur resulting in serious injuries or fatalities and the release of hazardous materials to the environment. Damaged electrical circuits and wiring could result in the initiation of fires.

6.2.2 Volcanic Eruption/Ash fall

Though not expected to cause structural damage, the ash resulting from a volcanic eruption could cause shorts in electrical equipment and plug ventilation system filters.

6.2.3 High Winds/Tornadoes

High winds that are defined as sustained winds above a threshold that would potentially or actually cause significant structural damage to the facility, are not expected to occur. (Significant structural damage is interpreted to mean a breach of facility containment/confinement systems sufficient to cause an actual or potential release of hazardous material to the environment). However, dirt and dust from windstorms could cause shorts in electrical equipment, or could plug ventilation system filters. Disruption of normal operations is possible.

6.2.4 Flood

The 200 Area is well above projected flood elevations for the Columbia and Yakima Rivers; therefore, a flood is not considered a credible natural event for the WTP. The grading and drainage features that are provided ensures that precipitation, even from a downpour, would infiltrate the ground or drain off toward the Columbia River without significant flooding. The WTP is not sited in a wetlands or coastal high hazard area.

6.2.5 Range Fire

The hazards associated with a range fire are similar to those associated with a building fire plus potential site access restrictions and travel hazards such as poor visibility. Smoke and ash from a range fire can also cause shorts in electrical equipment, or plug ventilation system filters. Disruption of normal operations is possible.

6.2.6 Aircraft Crash

In addition to the potential for serious injuries or fatalities, an aircraft crash could result in the direct release of hazardous materials to the environment or cause a fire that could lead to the release.

6.3 SECURITY CONTINGENCIES

Security contingencies are discussed in the following sections.

6.3.1 Bomb Threat/Explosive Device

A bomb threat may be received by anyone who answers the telephone or receives mail. The major effect on the WTP is that personnel will need to initiate emergency shutdown before evacuation. If an explosive device detonates, the effects are the same as those discussed under fire and explosion.

6.3.2 Hostage Situation/Armed Intruder

A hostage situation or the entry of an armed hostile intruder(s) can pose an emergency if either of these conditions has the potential to adversely affect facility operations. This could result in a loss of facility control or the coercion of an employee to take some malevolent action. The severity of the emergency would be based on actual or potential damage to the WTP or release of hazardous material or radioactive, dangerous, or mixed waste.

6.3.3 Suspicious Object

A suspicious object could result in an explosion. If a suspicious device were to detonate, the effects would be the same as those discussed under fire and explosion. The response to a suspicious device with the potential to contain a bomb would be the same as a bomb threat discussed in Section 6.3.1 above.

7.0 INCIDENT RESPONSE

The initial response to any emergency is to immediately protect the health and safety of persons in the affected area. Identification of released material is essential to determine appropriate protective actions. Containment, treatment, and disposal assessment are secondary responses.

The following sections describe the process for implementing basic protective actions as well as descriptions of response actions for the events listed in Section 6.0 of this plan. *Hanford Emergency Management Plan* (DOE/RL-94-02), Section 1.3, provides concept of operations for emergency response on the Hanford Site. Site specific procedures are detailed in DOE-0223 and will be used as necessary. Facility specific actions will be denoted in WTP emergency response procedures. Procedure titles will be included in Appendix 7A-A when the documentation is revised prior to the introduction of bulk quantities of hazardous chemicals into the WTP.

7.1 PROTECTIVE ACTION RESPONSES

Protective action responses are discussed in the following sections. The steps identified in the following description of actions do not have to be performed in sequence because of the unanticipated sequence of incident events.

7.1.1 Evacuation

The WTP may need to be evacuated when conditions warrant (such as fire, explosion, release of hazardous material, etc.). Evacuation will be initiated by automatic alarms or directed by the

BED. The evacuation alarm is a steady siren signal. The BED will use WTP emergency response procedures, experience and training to determine when conditions warrant evacuation.

The BED may initiate the evacuation of a building(s) or the entire WTP site with a verbal announcement or by manually initiating an evacuation alarm. The evacuation alarm will be delivered by a combination of the WTP siren system and warning lights. Specific instructions can be provided to personnel via the WTP public address system. As conditions warrant, the 200 Area evacuation alarms will be activated by telephoning the POC, using either 911 (preferred) or 373-3800. The BED will determine if an alternate staging area should be used based on the location of the event, wind direction, and WTP emergency procedures.

The Hanford Site evacuation routes are shown in Figure 7A-B-1, Appendix 7A-B. Evacuation routes out of the buildings will be provided in a revision of this document before the introduction of bulk quantities of hazardous chemicals into the WTP. These routes will be based on providing simple egress. Employees are trained on evacuation routes and procedures. Routes will be clearly marked and maintained clear of all obstructions. The BED will determine the operating configuration of the WTP and identify any additional protective actions needed for limiting exposure of personnel to the hazard.

Staging areas will be designated when the site and building layouts have been finalized. The exterior staging areas will be based on prevailing wind direction (NW), gates, and roadways leading off the site. These locations will be based on historical wind data in the 200 East Area. Alternate staging areas will be available for use if the wind direction or other circumstances necessitate.

For an immediate evacuation, accountability will be performed at the staging area. Personnel Accountability Aides (PAAs) and Staging Area Managers (SAMs) will ensure evacuation actions are taken at all applicable WTP buildings. These positions are standing assignments. Implementing actions executed by the PAAs and SAMs will be directed by site or plant emergency response procedures. When evacuation actions are complete, the PAAs will report to the SAMs. The Staging Area Managers will report to the BED via radio communications or other means, as necessary. When personnel cannot be accounted for active searches will be conducted. ERO personnel, utilizing personal protective equipment appropriate for the conditions, will conduct these searches.

To evacuate from any WTP building, personnel will proceed to the nearest exit. Stairways, not elevators, will be used to ascend or descend to the main level (0 ft. elevation). From the building, personnel will proceed to the primary staging areas unless otherwise instructed by the BED or other ERO personnel. Personnel in protective clothing when an evacuation alarm sounds will make every effort to follow normal exit procedures when exiting from radiological control areas, unless threatened by the emergency event. Personnel unable to remove protective clothing will remain separated from the others and report to the contaminated personnel staging sign (there will be a sign at each staging area). These personnel will notify staging area personnel that they need a radiation survey.

Personnel will immediately evacuate the building and proceed to the primary staging area (unless directed otherwise by the BED or other ERO personnel), when a fire alarm is heard. The discoverer of the fire will contact the Central Control Room (CCR) via telephone or radio. The BED will make an announcement on the public address system, stating which building has initiated the fire alarm, and inform personnel to stand clear of the area.

The BED may direct personnel to evacuate to an offsite location, if required. Personnel will remove and leave protective clothing in the parking lot and obtain a radiation survey prior to entering a vehicle. Personnel will use their privately owned vehicles. Personnel with their own vehicles will be asked to accommodate other personnel who are without transportation. Government vehicles may be available and may be obtained upon request from the RL Emergency Operations Center (RL-EOC).

7.1.2 Take Cover

The BED will initiate a local take cover notice for the WTP using the facility communications systems. Where area 200 could be affected, the BED will initiate the take cover alarm by telephoning the POC, using either 911 (preferred) or 509-373-3800. The take cover alarm is a wavering siren signal. Actions to complete a take cover order will be directed by WTP emergency response procedure. Determination of additional take cover actions will be based on operating configuration, weather conditions, type and duration of release, and other conditions, as applicable to the event and the associated hazard. The intent of this protective action is to minimize personnel exposure to hazardous materials and move personnel to locations where additional instructions can be provided.

When the take cover alarm is activated, personnel will halt work, place equipment in a safe condition, and take cover in the nearest building capable of providing shelter from an airborne hazard. Exterior doors and windows will be closed; and heating, ventilation, and air conditioning (HVAC) systems will be secured. If possible, personnel will follow normal exit procedures from radiological controlled areas in preparation for evacuation. The PAAs have responsibility to ensure that take cover actions are taken. These positions are standing assignments. When take cover actions are complete, the PAAs will provide the BED with a status report via communications paths identified in WTP procedures.

7.2 RESPONSE TO FACILITY OPERATIONS EMERGENCIES

Depending on the severity of the event, the BED reviews the site-wide and WTP emergency response procedure(s) and, as required, categorizes and/or classifies the event. If necessary, the BED initiates area protective actions and Hanford Site Emergency Response Organization activation. The steps identified in the following description of actions do not have to be performed in sequence because of the unanticipated sequence of incident events.

The following emergency signals will be used to initiate emergency response:

- Evacuation - steady siren
- Take Cover - wavering siren
- Fire - Gong/Bell

7.2.1 Loss of Utilities

A case-by-case evaluation is required for each event to determine loss of utility impacts. When a BED determines a loss of utility impact, actions are taken to ensure dangerous and/or mixed waste is being properly managed, to the extent possible given event circumstances. As necessary, the BED will stop operations and take appropriate actions until the utility is restored.

7.2.1.1 Loss of Electrical Power

Should there be a partial or total loss of electrical power to the WTP; automatic measures ensure the plant is in a safe operational configuration. (Safe operational configuration is defined as a shutdown to minimal operations that will prevent releases and prevent unnecessary damage to the equipment.)

The emergency power system will consist of two diesel turbine- automatically controlled emergency diesel generators and one diesel engine standby generator. The automatic and standby generators are connected to three separate 4.16kV emergency switchgears. Upon loss of power the emergency diesel turbine generators will automatically start. The emergency diesel turbine generators are capable of starting, accelerating, and being loaded with the design load in a specified time limit. The standby diesel generator is started manually or automatically in the event of a prolonged loss of offsite power. The emergency power system will be connected to essential loads in order to ensure only a short-term power interruption for those loads designated as essential. Critical indications and controls are backed up by uninterruptible power supplies and batteries. The plant will remain in a safe condition during loss of electrical power.

Egress lighting will consist of self-contained fixtures with battery packs and charging systems. These lighting systems will be located in stairways, exit routes and fire alarm stations and will come on automatically upon loss of normal power to the fixture. A selected part of the normal lighting will operate as essential lighting, and will provide a minimum level of illumination throughout the plant to aid in restoring the plant to normal operation. Essential lighting will be powered by the EPS and will be available after an offsite power loss, following a delay required to start the emergency power supply diesel generators and for the generators to pick up the essential loads.

Selected instrumentation and controls will also be powered by an un-interruptible power supply (UPS) system and therefore will be unaffected by a loss of offsite power. UPS systems will be battery backed, and the battery chargers will be connected to the EPS. Radiation monitors, such as Continuous Air Monitors (CAMs) and area radiation monitors, are also powered by the UPS systems and continue operating during power failure.

7.2.1.2 Loss of Water

Upon loss of the raw water system, operations will be restricted. Upon loss of potable water chemical operations will be terminated until safety showers and eyewash stations are available. Upon loss of the fire suppression system, the plant will be placed in a safe configuration, and corrective actions will be implemented.

7.2.1.3 Loss of Ventilation

A cascade ventilation system is used at the WTP in conjunction with physical building containment features to confine transferable radioactive contamination in the event of an

accidental release, spill, or system failure. The ventilation system is designed to maintain building differential pressures so air will flow from areas of lesser contamination potential to areas of greater contamination potential through containment boundary penetrations such as engineered air gaps and air in-bleed ductwork.

The WTP is divided into numbered zones with the higher number indicating the greater hazard potential and therefore the greater degree of control/restriction required. Radiation (R1 to R5) and contamination (C1 to C5) zones are classified independently in order to differentiate between the need for shielding or confinement.

Supply air in C2 areas flows via C3 to the C5 areas, where it will be discharged by the C5 exhaust fans. In some instances, the airflow will flow from the C2 areas to the C3 areas, where it will be discharged by the C3 exhaust fans. Some C2 air flow will be directly exhausted. Upon loss of the ventilation system, restoration of the C3 and C5 exhaust fans will be immediately attempted. If the C3 and C5 exhaust fans cannot be restored immediately, the C2 supply fans are automatically stopped, and personnel may be notified to evacuate C3 areas, as a precautionary measure.

The BED and either the ERO or the IC will take the following actions:

- Locate the source of the problem, and take steps necessary to control the event
- Ensure appropriate areas have been evacuated
- Monitor contamination levels in the plant
- Restore ventilation system

7.2.1.4 Loss of Process or Instrument Air

The process air system will use redundant air compressors. One will be in operation and the other(s) will be in autostart mode. If the standby compressor fails to start on loss of the operating compressor, a backup compressor will be started locally.

7.2.2 Major Process Disruption/Loss of Plant Control

If there is a major process disruption, the BED will be notified while an attempt is made to return the system to service. The BED will compare the situation to criteria provided in the facility categorization/classification procedure to determine if an Operational Emergency is occurring. If it is determined that an Operational Emergency is in progress, the BED will make the appropriate categorization/classification, initiate protective actions, begin the notification process, and request that the ERO be activated. The system condition will be assessed, and mitigative/corrective actions will be implemented.

7.2.3 Pressure Release

Pressure hazards in plant buildings associated with pressurized gases or compressed gas bottles could require changes to the plant operation and may require local evacuation. A fire or explosion caused by a release of pressurized gas will be responded to in accordance with Section 7.2.4. If a mixed waste release occurs, actions identified in Section 7.2.5 will be performed.

7.2.4 Fire and/or Explosion

In the event of a fire, the discoverer activates a fire alarm (pull box); calls 911 (509-373-3800 if using a cellular phone) or verifies that 911 has been called; and calls the CCR. Automatic initiation of a fire alarm (through the smoke detectors and sprinkler systems) is also possible. Activation of a fire alarm automatically signals the HFD and the Hanford POC and will be audible in the CCR.

As soon as non-essential personnel are notified of a fire (verbally or by fire alarm activation), they will immediately exit the WTP area or building by the nearest safe exit, proceed to the nearest staging area upwind of the area/building, check-in with PAAs, and follow the instructions of responding personnel. If personnel are reported missing, and might be within the WTP area/building, the BED will be notified. A search will be made, if safe to do so. The BED will initiate emergency response procedures and will notify ERO members and the incident command structure.

Initial actions to be taken by non-response personnel will consist of:

- Unless otherwise instructed, personnel will evacuate the area/building by the nearest safe exit and proceed to the designated staging area for accountability.
- On actuation of the fire alarm, ONLY if time permits, personnel should shut down equipment, and secure waste.

Trained and certified operations personnel may initiate a plant shutdown depending on the location and severity of the fire, and the location and type of hazards in the affected area. The BED will interface with the appropriate agencies of the incident command structure and will perform the following:

- Proceed directly to the ICP, obtain all necessary information pertaining to the incident, and send a representative to meet Hanford Fire Department.
- Provide a formal turnover to the IC, when the IC arrives at the ICP.
- Inform the Hanford Site Emergency Response Organization as to the extent of the emergency (including estimates of dangerous waste, mixed waste, or radioactive material quantities released to the environment).
- If operations are stopped in response to the fire, ensure that systems are monitored for leaks, pressure buildup, gas generation, and ruptures.

The following is representative of the type of information that the BED may be called upon to provide to the incident command structure or other response agencies:

- Location and health of personnel, including missing personnel and possible locations for fire fighters to search for them
- Location and severity of fire, including character, exact source, and the amount, area, and extent of any released materials
- Known hazardous conditions (such as, radiological, non-radiological, electrical, thermal, flammable materials, pressurized cylinders, toxic gas, pressure systems, batteries, radiation areas)
- Plant operating status

- Utility systems status
- Support for WTP radiological control personnel (that is, monitoring, surveys, sampling, decontamination)
- WTP layout
- Support for firefighter activities as required
- Notifications as required in accordance with plant procedures and *Hanford Emergency Management Plan* (DOE/RL-94-02), Section 5.1.1

Following a fire and/or explosion, WAC 173-303-640(7) will be addressed for any WTP tank systems that may have been affected regarding fitness for use.

7.2.5 Hazardous Material, Dangerous and/or Mixed Waste Spill

The WTP has engineering controls to contain or minimize spills. These controls include containment berms, dedicated spill control sumps, remote leak detection systems, remote gauges and level indicators as well as shielding on chemical pipe flanges. WTP procedures provide alarm response and maintenance actions for leak detection equipment, surveillance of possible leak locations, and response actions for detected spills.

Spills can result from many sources including process leaks, container spills or leaks, damaged packages or shipments, or personnel error. Spills of mixed waste are complicated by the need to deal with the extra hazards posed by the presence of radioactive materials.

The following actions will be taken in response to a spill or release of hazardous material, dangerous and/or mixed waste:

- The discoverer notifies the BED and initiates SWIMS response:

Stops work
Warns others in the vicinity
Isolates the area
Minimizes the spill if possible
Requests the BED **S**ecure ventilation.

- The BED determines if emergency conditions exist requiring response from the Hanford Fire Department based on classification of the spill and injured personnel, and evaluates need to perform additional protective actions.
- If the Hanford Fire Department resources are not needed, the spill is mitigated with resources identified in Section 9.0 of this plan and proper notifications are made.
- If the Hanford Fire Department resources are needed, the BED calls 911 (509-373-3800 if using a cellular phone).
- The BED sends a representative to meet the Hanford Fire Department.
- The BED provides a formal turnover to the IC when the IC arrives at the ICP.
- The BED informs the Hanford Site Emergency Response Organization as to the extent of the emergency (including estimates of dangerous waste, mixed waste, or radioactive material quantities released to the environment).

- If operations are stopped in response to the spill, the BED ensures that systems are monitored for leaks, pressure buildup, gas generation, and ruptures.
- Hanford Fire Department stabilizes the spill.

As necessary, the BED will also initiate or arrange for the following:

- Notify plant personnel of the spill or release by sounding the appropriate alarm, using the public address system, or other available means.
- Establish a control point at a safe location, and coordinate further spill mitigation activities.
- Obtain all available information pertaining to the event, evaluate the need for event categorization or classification, and begin ERO activation as necessary.
- Initiate use of plant and emergency response procedures.
- Arrange for care of any injured persons.
- Maintain access control at the event site by keeping unauthorized personnel and vehicles away from the area. Security personnel can be used to assist in site control. In determining which areas are to be controlled, the BED will consider environmental factors such as wind velocity and direction.
- Arrange for proper remediation of the event after evaluation, and if required, incident investigation processes have been initiated.
- Remain available for fire, patrol, and other authorities on the scene, and provide all required information.
- Enlist the assistance of alternate BED(s) or ERO personnel, if response activities are projected to be long term.
- Ensure the use of proper protective equipment, remedial techniques, transfer procedures and decontamination procedures by all involved personnel, if remediation is performed by plant personnel.
- Remain at the scene to oversee activities and provide information, if remediation is performed by the HFD HAZMAT Team or other response teams.
- Ensure proper containerization, packaging, and labeling of recovered spill materials.
- Ensure decontamination (or restocking) and restoration of emergency equipment used in the spill remediation before resuming operations.
- Provide required reports after the event in accordance with plant procedures.

Additional actions to be taken in response to a leaking tank include:

- Removal of the leaking tank from service.
- Conduct an investigation to determine the cause of the event.
- Perform repairs or replacements before the tank is returned to service, with, as required, a final approval from an independent certified professional engineer.
- Following an emergency event involving a tank system, address all requirements of WAC 173-303-640(7) regarding fitness for use.

7.2.5.1 Damaged or Unacceptable Shipments

No wastes will be received at the WTP from outside of the Hanford Site. Therefore, this section of the plan is not applicable to the WTP.

7.2.6 Radiological Material Release

7.2.6.1 C2, C3 or C5 Ventilation System Release

If high radiation alarms indicate the occurrence of a radiological material release from the C2, C3 or C5 ventilation system the operating ventilation system can be immediately switched over to the standby HEPA filtration system. Near-contact radiation surveys and additional assessment making use of on-line instruments will be performed to determine the extent of the radiological material released. The actions described in Section 7.2.1.3 will be performed.

7.2.6.2 Release of Mixed Waste into the Plant

If a catastrophic dumping of mixed waste occurs, affected plants or processes will be immediately shut down. The actions described in Section 7.2.5 will be performed.

If a catastrophic dumping causes a high radiation alarm on the C5 or C3 ventilation systems, the standby systems will be started, and actions described in Section 7.2.1.3 will be performed.

7.2.7 Criticality

Analyses have shown that there is no credible criticality event that can be postulated to occur at the WTP (BNI 2001b).

7.3 PREVENTION OF RECURRENCE OR SPREAD OF FIRES, EXPLOSIONS, OR RELEASES

The BED, as part of the ICS, takes the steps necessary to ensure that a secondary release, fire, or explosion does not occur. The BED will take measures, where applicable, to stop processes and operations; collect and contain released wastes and remove or isolate containers. The BED will also monitor for leaks, pressure buildups, gas generation, or ruptures in valves, pipes, or other equipment, whenever this is appropriate.

7.4 RESPONSE TO NATURAL PHENOMENA

Depending on the severity of the event, the BED reviews site wide and WTP emergency response procedure(s) and, as required, categorizes and/or classifies the event. If necessary, the BED initiates area protective actions and Hanford Site Emergency Response Organization activation. The steps identified in the following description of actions do not have to be performed in sequence because of the unanticipated sequence of incident events.

7.4.1 Seismic Event

The Hanford Site Emergency Response Organization's primary role in a seismic event is coordinating the initial response to injuries, fires, and fire hazards and acting to contain or control radioactive and/or hazardous material releases.

Individuals should remain calm and stay away from windows, steam lines, and hazardous material storage locations. Once the shaking has subsided, individuals should evacuate carefully and assist personnel needing help. The location of any trapped individuals should be reported to the BED or is reported to 911 (509-373-3800 if using a cell phone).

The BED takes whatever actions are necessary to minimize damage and personnel injuries. Responsibilities include the following:

- Coordinating searches for personnel and potential hazardous conditions (fires, spills, etc.)
- Conducting accountability.
- Securing utilities and facility operations.
- Arranging rescue efforts, and notifying 911 for assistance.
- Determining if hazardous materials were released.
- Determining current local meteorological conditions.
- Warning other facilities and implementing protective actions if release of hazardous materials poses an immediate danger.
- Providing personnel and resource assistance to other facilities, if required and possible.

7.4.2 Volcanic Eruption/Ash fall

When notified of an impending ash fall, the BED will implement measures to minimize the impact of the ash fall. BED actions may include the following:

- Installing filter media over building ventilation intakes
- Installing filter media or protective coverings on outdoors equipment that may be adversely affected by the ash (diesel generators, equipment rooms etc.)
- Shutting down some or all operations and processes
- Sealing secondary use exterior doors

If other emergency conditions arise as a result of the ashfall (e.g., fires due to electrical shorts or lightning), response is as described in other sections of this plan.

7.4.3 High Winds/Tornadoes

Upon notification of impending high winds, the BED takes steps necessary to secure all outdoor waste and hazardous material containers and storage locations.

All doors and windows are shut, and personnel are warned to use extreme caution when entering or exiting the building. Ventilation, utilities, and operations will be shut down as appropriate to lessen the severity of the impact.

7.4.4 Flood

Since the 200 Area is well above projected flood elevations for the Columbia and Yakima Rivers, this section is not applicable.

7.4.5 Range Fire

Responses to range fires are handled by preventive measures (i.e., keeping hazardous material and waste accumulation areas free of combustible materials such as weeds and brush). If a range fire breaches the WTP boundary, the response is as described in Section 7.2.4.

7.4.6 Aircraft Crash

The response to an aircraft crash is the same as for a fire and/or explosion (Section 7.2.4).

7.5 SECURITY CONTINGENCIES

Depending on the severity of the event, the BED reviews sitewide and WTP emergency response procedure(s) and, as required, categorizes and/or classifies the event. If necessary, the BED initiates area protective actions and Hanford Site Emergency Response Organization activation. The steps identified in the following description of actions do not have to be performed in sequence because of the unanticipated sequence of incident events.

7.5.1 Bomb Threat/Explosive Device

Response to a bomb threat/explosive device is discussed in the following sections.

7.5.1.1 Telephone Threat

Individuals receiving telephoned threats attempt to get as much information as possible from the caller (using the bomb threat checklist if available). Upon conclusion of the call, notify the BED and Hanford Patrol by calling 911 (do not use a cellular phone or hand-held radio for reporting a bomb threat/explosion unless beyond 300 feet from suspected object).

The BED evacuates the WTP and questions personnel at the staging area regarding any suspicious objects. When Hanford Patrol personnel arrive, their instructions will be followed.

7.5.1.2 Written Threat

Receivers of written threats should handle the letter as little as possible. The BED and Hanford Patrol will be notified by calling 911 (do not use a cellular phone or hand-held radio for reporting a bomb threat/explosion unless beyond 300 feet from suspected object). Depending on the content of the letter, the BED might evacuate the affected locations. The letter is turned over to Hanford Patrol and their instructions are followed.

7.5.2 Hostage Situation/Armed Intruder

The discoverer of a hostage situation or armed intruder reports the incident to 911 (509-373-3800 if using a cell phone) and to the BED if possible. The BED, after conferring with Hanford Patrol, might covertly evacuate areas not observable by the hostage taker(s)/intruder. No alarms will be sounded.

Hanford Patrol will determine the remaining response actions and will activate the Hostage Negotiating Team, if necessary.

7.5.3 Suspicious Object

The discoverer of a suspicious object reports this object to the BED and to 911 (do not use a cellular phone or hand-held radio for reporting a bomb threat/explosive device unless beyond 300 feet from suspected object), if possible, and ensures that the object is not disturbed.

The BED will evacuate the WTP and (based on the description provided by the discoverer) attempt to determine the identity or owner of the object. Personnel will be questioned at the staging area to attempt to identify the owner of the object.

If the identity/ownership of the object cannot be determined, then Hanford Patrol will assume command of the incident. The canine unit will be used to determine if the package contains explosives. If there is a positive indication of explosives or it cannot be assured that there are no

explosives, then an Explosive Ordnance Disposal Team will be dispatched to properly dispose of the object.

8.0 TERMINATION OF EVENT, INCIDENT RECOVERY, AND RESTART OF OPERATIONS

Hanford Emergency Management Plan (DOE/RL-94-02), Section 9.0, describes actions for event termination, incident recovery, and restart of operations. The extent by which these actions are employed is based on the incident classification of each event. In addition, Hanford *Emergency Management Plan* (DOE/RL-94-02) also contains actions for the management of incompatible wastes that might apply.

8.1 TERMINATION OF EVENT

For events where the Hanford Emergency Operations Center (Hanford-EOC) is activated, the RL/ORP Emergency Manager has the authority to declare event termination. This decision is based on input from the BED, IC, and other emergency response organization members. For events where the Hanford-EOC is not activated, the incident command system and staff will declare event termination.

8.2 INCIDENT RECOVERY AND RESTART OF OPERATIONS

A recovery plan is developed when necessary in accordance with *Hanford Emergency Management Plan* (DOE/RL-94-02), Section 9.2. A recovery plan is needed following an event where further risk could be introduced to personnel, the WTP facilities, or the environment through recovery action and/or to maximize the preservation of evidence.

If the WTP ERP is implemented in accordance with Section 4.0 of this plan, Ecology will be notified before operations can resume. This notification is in addition to the required reports discussed in Section 5.1 of *Hanford Emergency Management Plan* (DOE/RL-94-02) and will include the following statements;

- There are no incompatibility issues with the waste and released materials from the incident.
- All the equipment has been cleaned, fit for its intended use, and placed back into service.

The notification required by WAC 173-303-360(2)(j) may be made via telephone conference. Additional information that Ecology requests regarding these restart conditions will be included in the required 15-day report identified in Section 11.0 of this plan.

For emergencies not involving activation of the Hanford-EOC, the BED ensures that conditions are restored to normal before operations are resumed. If the Hanford Site Emergency Response Organization was activated and the emergency phase is complete, a special recovery organization could be appointed at the discretion of RL to restore conditions to normal. This process is detailed in RL and contractor emergency procedures. The makeup of this organization depends on the extent of the damage and the effects. The onsite recovery organization will be appointed by the appropriate contractor's management.

8.3 INCOMPATIBLE WASTE

After an event, the BED, or the onsite recovery organization ensures that no waste that might be incompatible with the released material is treated, stored, and/or disposed of until cleanup is completed. Clean up actions are taken by WTP personnel or other assigned personnel. *Hanford Emergency Management Plan* (DOE/RL-94-02) Section 9.2.3, describes actions to be taken.

Waste from cleanup activities is designated and managed as newly generated waste. A field check for compatibility is performed before storage, as necessary. Incompatible wastes are not placed in the same container. Containers of waste are placed in approved storage areas appropriate for their compatibility class.

If incompatibility of waste was a factor in the incident, the BED or the onsite recovery organization ensures that the cause is corrected

8.4 POST EMERGENCY EQUIPMENT MAINTENANCE AND DECONTAMINATION

All equipment used during an incident is decontaminated (if practicable) or disposed of as spill debris. Decontaminated equipment is checked for proper operation before storage for subsequent use. Consumable and disposed materials are restocked. Fire extinguishers are replaced.

The BED ensures that all equipment is cleaned and fit for its intended use before operations are resumed. Depleted stocks of neutralizing and absorbing materials are replenished, self-contained breathing apparatus are cleaned and refilled, protective clothing is cleaned or disposed of and restocked, etc.

9.0 EMERGENCY EQUIPMENT

Hanford Site emergency resources and equipment are described and listed in *Hanford Emergency Management Plan* (DOE/RL-94-02), Appendix C. Emergency resources and equipment for the WTP are presented in this section.

9.1 FIXED EMERGENCY EQUIPMENT

The following table lists the fixed emergency equipment available at the WTP.

Table 7A-2 Fixed Emergency Equipment

Type	**Location**	**Capability**
Safety shower/eye wash station	Throughout the WTP in locations designated by facility procedures.	Assist in flushing chemicals/materials from body or eyes and face.
Automatic sprinkler system	Throughout the WTP.	Assist in the control of fire.
Fire alarm pull boxes	Throughout the WTP.	Activates the building fire alarm and notifies fire department, as developed by Coordination Agreements.
Emergency diesel generators	East of the LAW Facility.	Provide emergency power.
Fire hose connections	Throughout the WTP in locations designated by facility procedures.	Allow for connection of fire hoses to site water system for manual fire suppression.

Table 7A-2 Fixed Emergency Equipment

Type	Location	Capability
Personnel decontamination rooms	TBD	Personnel decontamination.

Note: TBD = To be determined

9.2 PORTABLE EMERGENCY EQUIPMENT

The following table lists available portable emergency equipment.

Table 7A-3 Portable Emergency Equipment

Type	Location	Capability
General purpose fire extinguishers	Throughout the WTP.	Fire suppression for class A, B, and C fires.
CO_2 or clean agent fire extinguishers	Throughout the WTP.	Suppress electrical fires.
Miscellaneous emergency equipment	Throughout the facility located in emergency equipment cabinets as designated by facility procedures.	Safety harnesses, blankets, first aid kits, stretchers, emergency lights, and emergency tools.

9.3 COMMUNICATIONS EQUIPMENT/WARNING SYSTEMS

The following table lists all communications and warning systems.

Table 7A-4 Communications Equipment

Type	Location	Capability
Siren System Evacuation STEADY SIREN Take Cover WAVERING SIREN Fire GONG/BELL	Throughout the WTP.	Alert facility personnel of emergency conditions.
PA System	Throughout the WTP.	Provides for information dissemination to facility personnel.
Fire alarm pull boxes	Throughout the WTP.	Summon aid in the event of a fire.
Telephone system	WTP CCR, office areas, and other plant locations.	Internal and external communications.
Portable two-way radios	Throughout the WTP.	Communications to the CCR.
Pagers	Assigned to key personnel.	To alert key personnel to respond, either individually or by group alert.

9.4 PERSONAL PROTECTIVE EQUIPMENT

The following table lists types of protective equipment available.

Table 7A-5 Personal Protective Equipment

Type	Location	Capability

Waterproof coveralls, Leather protective wear, Respirators, Filtered masks, Oxygen supplies, Escape Paks, SCBAs.	Throughout the facility in or near emergency equipment cabinets as designated by facility procedure.	Protection from various hazards (e.g., smoke, fumes, oxygen deficient atmosphere, chemicals, high airborne radioactivity concentrations, radiological contamination)

9.5 SPILL CONTROL AND CONTAINMENT SUPPLIES

The following table lists the locations of spill kits and includes a basic listing of contents.

Table 7A-6 Spill Kits and Spill Control Equipment

Type	**Location**	**Capability**
Absorbent materials 55-gal drums Overpack drums Bags Step-off pads Protective clothing Chemical resistant coveralls Surgical and chemical gloves Acid Goggles/Face shields Sodium bicarbonate Barrier Tape Rags Scissors Flashlight Batteries pH paper Mop handles Mop heads Mop bucket with wringer Hazardous material labels Non-sparking shovel Hazardous absorbent booms Ear plugs Portable barriers	Throughout the facility in or near spill kit cabinets as designated by facility procedures.	Control and mitigation of radioactive and chemical spills.

9.6 INCIDENT COMMAND POST

The WTP primary ICP is located in the administration building. Alternate locations will be determined at the time of the emergency, if necessary. The location may be inside a building or outside, and may change depending on the weather, wind direction, and location and severity of the event. The IC could also activate the Hanford Fire Department Mobile Command Unit if necessary.

The ICP will contain the following:

- Telephone communications, (including speakerphones and headsets) including the Hanford Site Emergency Alerting System (HSEAS)
- Radio communications
- Access to the public address system
- Access to plant operations data
- Access to plant systems information
- Access to accountability and building access control information
- Access to the Hanford Local Area Network (HLAN) as necessary

10.0 COORDINATION AGREEMENTS

RL has established a number of coordination agreements, or memoranda of understanding (MOU) with various agencies to ensure proper response resource availability for incidents involving the Hanford Site. A description of the agreements is contained in *Hanford Emergency Management Plan* (DOE/RL-94-02), Section 3.0, Table 3-1.

11.0 REQUIRED REPORTS

Post incident written reports are required for certain incidents on the Hanford Site. The reports are described in *Hanford Emergency Management Plan* (DOE/RL-94-02), Section 5.1.

Facility management will note in the WTP operating record, the time, date, and details of any incident that requires implementation of the contingency plan (refer to Section 4.0 of this plan). Within fifteen (15) days after the incident, a written report on the incident will be submitted to Ecology. The report will include all items specified in WAC 173-303-360(2)(k).

If a release from a tank system occurs that requires notification according to WAC 173-303-640(7), notification as described in WTP procedures will be followed.

12.0 PLAN LOCATION AND AMENDMENTS

Copies of this plan are maintained at the following locations:

- WTP CCR
- RL EOC
- POC
- HFD

Portions of the plan will be reviewed and immediately amended if necessary, when conditions described in *Hanford Emergency Management Plan* (DOE/RL-94-02), Section 14.3.1.1 occur. In addition, the plan will be revised prior to the introduction of bulk quantities of hazardous chemicals into the WTP. This will include information that is not currently available. Subsequently, the plan will be reviewed and updated annually.

13.0 FACILITY EMERGENCY RESPONSE ORGANIZATION

The following table lists the Building Emergency Directors (BED) by job title.

Building Emergency Director

Table 7A-7 WTP BEDs

Title	**Location**	**Phone**
Shift Operations Manager (SOM), Pretreatment Facility	Central Control Room, Pretreatment Facility	TBD
SOM, LAW Facility	Control Room, LAW Facility	TBD
SOM, HLW Facility	Control Room, HLW Facility	TBD

Names and home telephone numbers of the BEDs will be available from the POC (509-373-3800) in accordance with Hanford Facility Dangerous Waste Permit, General Condition II.A.3. This list will be available prior to the introduction of bulk quantities of hazardous chemicals into the WTP.

14.0 REFERENCES

BNFL Inc. 1999b. *Draft Work Plan for Screening Level Risk Assessment for the RPP-WTP*, RPT-W375-EN00001, Revision D, 15 November 1999. BNFL Inc., Richland, Washington, USA.

BNI 2001a. *River Protection Project – Waste Treatment Plant Dangerous Waste Training Plan*, Revision 1, August 2001. Bechtel National Incorporated, Richland, Washington, USA.

BNI 2001b. *Criticality Safety Evaluation Report for RPP-WTP*, 24590-WTP-RPT-NS-01-001, Revision 0, Sept 4, 2001. Bechtel National Incorporated, Richland, Washington, USA.

DOE Order 232.1, *Occurrence Reporting and Processing of Operations Information*, United States Department of Energy, Washington D.C.

DOE/RL-94-02, *Hanford Emergency Management Plan*, as amended

WAC 173-303, *Washington State Dangerous Waste Regulations*, *Washington Administrative Code*, Washington State Department of Ecology, Olympia, Washington, as amended

Ecology, 1994, *Dangerous Waste Portion of the Hanford Facility Resource Conservation and Recovery Act Permit for the Treatment, Storage, and Disposal of Dangerous Waste, Permit* Number WA7890008967, Washington State Department of Ecology, Olympia, Washington, as amended

This page intentionally left blank.

Appendix 7A-A

List of Emergency Response Procedures

DOE-0223, *Emergency Plan Implementing Procedures*: RLEP 3.4, "Emergency Termination, Reentry, and Recovery"
DOE-0223, *Emergency Plan Implementing Procedures*: RLEP 1.1, "Hanford Incident Command System and Event Recognition and Classification"
DOE-0223, *Emergency Plan Implementing Procedures*: RLEP 1.0, "Recognizing and Classifying Emergencies," Appendix 1-X.X.
Facility specific procedures will be available prior to the introduction of bulk quantities of hazardous chemicals into the WTP.

This page intentionally left blank.

Appendix 7A-B

Evacuation Routes

This Appendix will contain figures of:

- The site plot plan showing the position of the staging areas.
- Floor plans for each WTP Facility showing evacuation routes.

These figures will be provided prior to the introduction of bulk quantities of hazardous chemicals into the WTP.

Figure 7A-B-1 Hanford Site Evacuation Routes

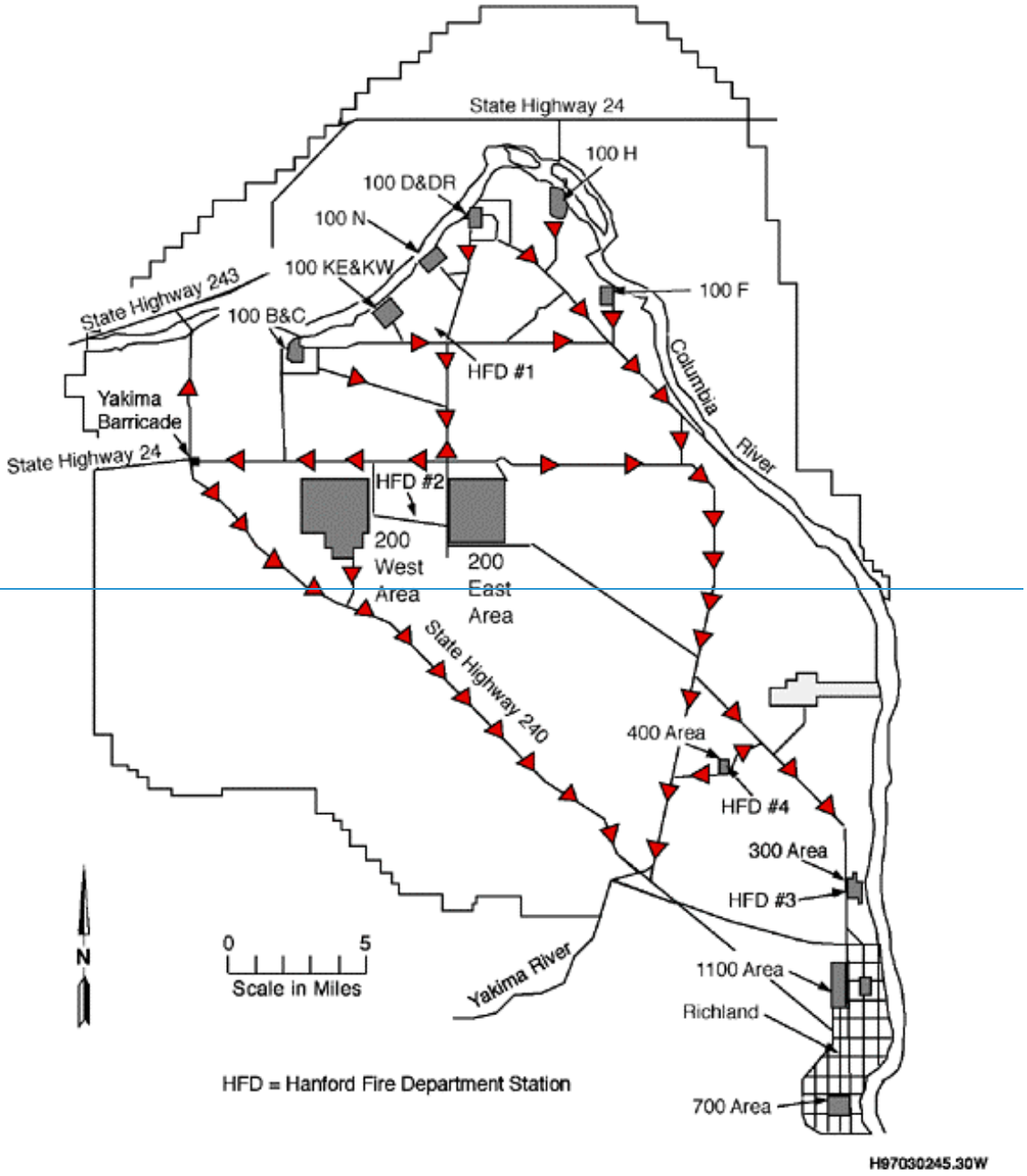

Chapter 8.0

Personnel Training

This page intentionally left blank.

CHAPTER 8.0
PERSONNEL TRAINING

Contents

8.1 Introduction 1
8.2 Initial Training 1
8.3 Task Specific Training 2
8.4 Description of Training Plan 4
8.5 Continuing Training 5
8.6 Training Program Administration 6
8.7 Job Title and Job Description 6
8.8 Documentation and Record Retention 6

Tables

Table 8-1 Example WTP Training Matrix 7

8.1 Introduction

This chapter discusses personnel training requirements based on Washington Administrative Code (WAC) 173-303 and the *Dangerous Waste Portion of the Hanford Facility Resource Conservation and Recovery Act Permit for the Treatment, Storage, and Disposal of Dangerous Waste* (Ecology 1994a), hereafter referred to as "the Permit".

Permit Condition II.C (Personnel Training) contains training requirements applicable to Hanford ~~Facility personnel and non-~~Site facility personnel and non-facility personnel. Compliance with these requirements at the Hanford Tank Waste Treatment and Immobilization Plant (WTP) is demonstrated by information contained in both Permit Attachment 5 and this chapter. ~~–~~A ~~WTP Dangerous Waste Training Plan~~ training plan for the WTP will be submitted for incorporation into the ~~Administrative Record~~operating record prior to initial receipt of waste to meet ~~Compliance Schedule Item~~interim compliance schedule item 7.

~~**This chapter will be updated and resubmitted for agency approval prior to initial receipt of waste, in accordance with Compliance Schedule Item 6.**~~

~~8.1 Outline of Introductory and Continuing Training Programs~~

~~**The introductory and continuing training programs are designed to prepare personnel during the operations phase, to manage and maintain the WTP in a safe, effective, and environmentally sound manner. In addition to preparing personnel to manage and maintain the WTP under normal conditions, the training programs ensure that personnel are prepared to respond in a prompt and effective manner should off normal or emergency conditions occur. Emergency response training is consistent with the description of actions contained in Part III, Operating Unit Group 10, Chapter 7.0, Contingency Plan. The introductory and continuing training programs are intended to meet the following objectives:**~~

- ~~**Teach WTP personnel to perform their duties in a way that ensures the WTP's compliance with WAC 173-303 and this Permit**~~
- ~~**Teach WTP personnel dangerous waste management procedures (including implementation of the contingency plan) relevant to the job titles and positions in which they are employed**~~
- ~~**Ensure that WTP personnel can respond effectively to emergencies**~~

8.~~1.1 Introductory~~2 Initial Training

Introductory training includes general Hanford Facility training and WTP-specific training. General Hanford Facility training is described in Permit Attachment 5, and provided in accordance with~~,~~ Permit Condition II.C. WTP-specific training is provided to WTP personnel allowing personnel to work

unescorted, and in some cases is required for escorted access. WTP personnel cannot perform a task for which they are not properly trained, except to gain required experience while under the direct supervision of a supervisor or coworker who is properly trained. WTP personnel will be trained within ~~six~~6 months after their employment at or on assignment to the WTP. If personnel are assigned to a new job title or position at the WTP, any additional position-specific training will be completed within ~~six~~6 months.

General Hanford Facility Orientation: Refer to description in Permit Attachment 5, Section 5.1.

Contingency plan training: WTP personnel receive training on applicable portions of the *Hanford Emergency Management Plan*~~,~~ (DOE/RL-94-02~~,~~), as amended (Permit Attachment 4) in General Hanford Facility Orientation. In addition, WTP personnel receive training on the description of actions contained in the ~~Contingency Plan~~contingency plan documentation in Part III, Operating Unit Group 10, Chapter 7.0 ~~and Appendix 7A,~~ to be able to effectively respond to WTP emergencies ~~at the WTP~~.

Emergency coordinator training: WTP personnel who perform emergency coordinator duties as specified in WAC 173-303-360 (~~for example,~~e.g., the~~-~~ Building Emergency Director) in the Hanford Incident Command System (ICS) receive training on implementation of the ~~Contingency Plan~~contingency plan and fulfilling the position within the Hanford ~~Incident Command System.~~ICS. These WTP personnel will also become thoroughly familiar with applicable ~~Contingency Plan~~contingency plan documentation, operations, activities, location, and properties of waste handled, location of records, and the unit and building layout.

Operations training: Dangerous waste management operations training (~~for example,~~e.g., waste designation training, shippers training) will be determined on a unit-by-unit basis, and will consider the type of waste management unit and the type of activities performed at the waste management unit. For example, training provided for management of dangerous waste in containers will be different than the training provided for management of dangerous waste in a tank system. Common training required for compliance within similar waste management units can be provided in general training, and supplemented at the WTP. Training provided for WTP-specific operations ~~will be~~are identified in both this chapter and will be included in the WTP Dangerous Waste Training Plan. The detailed course curricula descriptions will be contained in the WTP Dangerous Waste Training Plan. WTP-specific training ~~will be~~is based on the following:

- Whether a general training course exists
- The training needs to ensure waste management unit compliance with WAC 173-303
- Training commitments agreed to with the Washington State Department of Ecology

8.~~1.2 Continuing~~3 Task Specific Training

~~Continuing training meets the requirements for WAC 173-303-330(1)(b) and includes general facility training and unit specific training, as specified below.~~

~~General Hanford Facility Orientation Annual refresher training is provided for General Hanford Facility training. Refer to description in Permit Attachment 5, Section 5.1.~~

~~Contingency Plan Training: Annual refresher training is provided for contingency plan training. Refer to description above in Section 8.1.1.~~

~~Emergency Coordinator Training: Annual refresher training is provided for emergency coordinator training. Refer to description above in Section 8.1.1.~~

~~Operations Training: Refresher training occurs on various frequencies for operations training (that is, annual, every other year, every three years). When justified, some training will not contain a refresher course and will be identified as a one-time-only training course. The WTP Dangerous Waste Training Plan and the training matrix in Table 8-1 of this chapter will specify the frequency for each training course. Refer to description above in Section 8.1.1.~~

~~8.2 DESCRIPTION OF TRAINING DESIGN~~

A properly designed training program ensures that personnel who perform duties at the WTP related to WAC 173-303-330(1)(d) are trained to perform their duties in compliance with WAC 173-303. Actual job tasks, referred to as duties, are used to determine training requirements.

- The first step taken to ensure that WTP personnel have received the proper training is to determine and document the waste management duties by job title~~/~~ and position.
- In the second step, waste management duties are compared to the general waste management unit training curriculum. If the general waste management unit training curriculum does not address the waste management duties, the training curriculum is supplemented and~~/~~ (or) on-the-job training is provided.
- The third step summarizes the content of a training course necessary to ensure ~~that~~ the training addresses the appropriate waste management duties.
- The fourth and last step is to assign training curriculum to WTP personnel based on their job title~~/~~ and position. The WTP Dangerous Waste Training Plan ~~describes~~will describe this process.

Waste management duties include those specified in ~~Section~~Attachment 5 and Table 8-1, as well as those contained in WAC 173 303-330(1)(d). Training elements of WAC 173-303-330(1)(d) applicable to WTP operations include the following:

- Procedures for using, inspecting, repairing, and replacing emergency equipment and monitoring equipment
- Key parameters for automatic waste feed cut-off systems
- Communications or alarm systems
- Response to fires or explosions
- ~~Response to groundwater contamination incident~~
- Shutdown of operations

WTP personnel who perform these duties receive training specific to their duties. The WTP Dangerous Waste Training Plan ~~described in Section 8.3~~ will contain detailed course curricula for the types of training WTP personnel receive based on ~~the outline in Section 8.~~Attachment 5 and Table 8-1.

8.~~3~~4 Description of Training Plan

The WTP Dangerous Waste Training Plan will consist of one or more documents and a training ~~database. As allowed under Permit Condition II.C.5.b, training records will be maintained in hard copy and/or electronic media.~~ database. As allowed under Permit Condition II.C.5.b, training records will be maintained in hard copy and/or electronic media.

In accordance with Permit Condition II.C.5.b, the WTP Dangerous ~~2~~ Waste Training Plan is maintained outside the Permit, in the WTP Unit-Specific Files of the Hanford Facility Operating Record. Changes to the WTP Dangerous Waste Training Plan are not required to undergo a permit modification. However, any change to this chapter is required to undergo a permit modification, which may affect information contained in the training plan. Upon completion of a permit modification that updates this chapter, the permittee has 6 months to submit an updated WTP Dangerous Waste Training Plan for incorporation into the Operating Record.

In accordance with Permit Condition II.C.1, the unit-specific portion of the Permit will contain a description of the training plan.

A description of how The WTP Dangerous Waste Training Plan meets the requirements in WAC 173-303-330(2) is as follows:

1 -330(2)(a): "The job title, job description, and name of the employee filling each job. The job description will include requisite skills, education, other qualifications, and duties for each position."
Description: The specific WTP personnel job title and position is correlated to the waste management duties. Waste management duties relating to WAC 173-303 are correlated to training courses to ensure training is properly assigned.

Only names of WTP personnel who perform duties relating to waste management operations at the WTP are required to be maintained. Names are maintained as described in the WTP Dangerous Waste Training Plan. A list of personnel assigned to the WTP is available upon request.

Information on requisite skills, education, and other qualifications for job title and positions are addressed by providing a reference where this information is maintained (for example, ~~Human Resources). Specific information concerning job title, requisite skills, education, and other qualifications for personnel can be provided upon request.~~ Human Resources). Specific information concerning job title, requisite skills, education, and other qualifications for personnel can be provided upon request.

2 -330(2)(b): "A written description of the type and amount of both introductory and continuing training required for each position."
Description: In addition to the outline provided in Section 8.1, training courses developed to comply with the introductory and continuing training programs are identified and described in the WTP Dangerous Waste Training Plan. As discussed above in Section 8.2, the training plan will be updated to include detailed course curricula for the types of training WTP personnel receive based on the

outline in Section 8.1. ~~-~~The type and amount of training is specified in the training plan. ~~.—~~Table 8-1 is included as an example of a typical training matrix that shows typical job/titles and positions matched to a training category.~~–~~ The WTP Training Plan will be developed and submitted in accordance with Permit Condition III.10.C.7, and will include dangerous waste management related job titles and position descriptions, and the type and amount of initial, refresher, and on-the-job training required for each.

3 -330(2)(c) and 330(3): "Records documenting that personnel have received and completed the ~~training required~~training required by this section.~~-~~ The Department may require, on a case-by-case basis, that training records include employee initials or signature to verify that training was received."

Description: ~~-~~Training records are maintained consistent with Permit Attachment 5, Section 8.5.5~~.~~ and WAC 173-303-330(3)"

8.5 Continuing Training

Initial and continuing training programs are also designed to prepare personnel during the operations phase, and to manage and maintain the WTP in a safe, effective, and environmentally sound manner. In addition to preparing personnel to manage and maintain the WTP under normal conditions, the training programs ensure that personnel are prepared to respond in a prompt and effective manner should off normal or emergency conditions occur. Emergency response training is consistent with the description of actions contained in Part III, Operating Unit Group 10, Chapter 7.0, Contingency Plan. The introductory and continuing training programs are intended to meet the following objectives:

- Teach WTP personnel to perform their duties in a way that ensures the WTP's compliance with WAC 173-303 and this permit
- Teach WTP personnel dangerous waste management procedures (including implementation of the contingency plan) relevant to the job titles and positions in which they are employed
- Ensure that WTP personnel can respond effectively to emergencies
- Ensure that the WTP training program is reviewed annually to meet the requirements in WAC 173-303-330 (1) (b).

Continuing training meets the requirements for WAC 173-303-330(1)(b) and includes general facility training and unit specific training, as specified below.

General Hanford Facility Orientation: Annual refresher training is provided for general Hanford Facility training. Refer to description in Permit Attachment 5, Section 5.1.

Contingency Plan Training: Annual refresher training is provided for contingency plan training. Refer to description above in Section 8.2.

Emergency Coordinator Training: Annual refresher training is provided for emergency coordinator training. Refer to description above in Section 8.2.

Operations Training: Refresher training occurs on various frequencies for operations training (i.e., annual, every other year, every 3 years). When justified, some training will not contain a refresher course and will be identified as a one-time-only training course.

8.6 Training Program Administration

The WTP Project Training Department is responsible for identifying the appropriate training requirements specified in Attachment 5 and Table 8-1 to ensure that personnel are trained, qualified, and capable of performing their assigned tasks. Project Training is also responsible for providing the support necessary to ensure that personnel are qualified to safely and effectively meet job requirements.

8.7 Job Title and Job Description

The job titles and job positions are specified in Attachment 5 and categorized in Table 8-1.

8.8 Documentation and Record Retention

All personnel training records at the WTP facility will be recorded and maintained in the WTP Unit operating record, (Hanford Facility Operating Record), and will be kept onsite or at the permittee's offices located in Richland, Washington, per recordkeeping requirements in Permit Condition II.I and WAC 173-303-380.

Table 8-1 Example WTP Training Matrix

Training Category[a]								
Permit Attachment 5 Training Category	**General Hanford Facility Training**	**Contingency Plan Training**	**Emergency Coordinator Training**	**Operations Training**				
WTP DWTP Implementing Category	**Orientation Program**	**Emergency Management Plan**	**Emergency Coordinator Training**	**General Waste Mgmt**	**Container Mgmt**	**Tank System Mgmt**	**Containment Buildings Mgmt**	**Misc Unit Mgmt**
Example Job Title/Position								
Operators	X	X		X		X	X	X
Shift Operations Manager	X	X	X	X	X	X	X	X
Hazardous Waste Operations (HWO) Manager	X	X		X	X	X	X	X
Operations Manager	X	X	X	X				
Environmental Compliance Officer	X			X				
Waste Service Provider	X			X	X			
Hazardous Waste Operators	X	X		X	X	X	X	X
Laboratory Technician –Hazardous Waste Operations (HWO)	X	X		X	X			
Laboratory Technician	X	X						
Laboratory Manager	X	X	X		X			

[a]Refer to the WTP Dangerous Waste Training Plan for a complete description of coursework in each training category.

CHAPTER 11.0
CLOSURE PLAN

This page intentionally left blank.

CHAPTER 11

CLOSURE PLAN

TABLE OF CONTENTS

11.0 Introduction 1
11.1 Closure Plan Overview 1
11.1.1 Closure Plan Revisions 2
11.2.0 Closure Performance Standard 3
11.2.1 Closure Standards for Soils, Groundwater, Surface Water, and Air 7
11.2.2 Closure Standards for Decontamination of Structures and Equipment 8
11.2.3 Closure Standards for Tank Systems 10
11.2.4 Closure Standards for Container Storage Areas 11
11.2.5 Closure Standards for Containment Buildings 11
11.2.6 Closure Standards for Miscellaneous Units 11
11.3.0 Closure Activities 12
11.3.1 Maximum Extent of Operations 17
11.3.2 Removing Dangerous/Mixed Waste 17
11.3.3 Decontaminating Structures, Equipment, and Soils 18
11.3.3.1 Secondary Containment Structures and Associated Equipment 20
11.3.3.2 Building Air Emission Control Equipment 21
11.3.3.3 Soil 21
11.3.4 Sampling and Analysis to Identify Extent of Decontamination/Removal and to Verify Achievement of Closure Performance Standard 22
11.3.4.1 Sampling to Confirm Decontamination of Structures and Soil 23
11.4.0 Other Activities 23
11.4.1 Certification of Closure 23
11.4.2 Run-on and Runoff Control 24
11.4.3 Equipment Reuse 24
11.5.0 Maximum Waste Inventory 25
11.6.0 Closure of Tanks, Container Storage, Containment Buildings, and Misc. Units 25
11.6.1 Closure of Tank Systems 25

11.6.2 Closure of Container Storage Areas 27
11.6.3 Closure of Containment Building Units 28
11.6.4 Closure of Miscellaneous Units 29
11.7.0 Schedule for Closure 29
11.8.0 Extension for Closure Time 30

TABLES

Table 11-1 Maximum Waste Inventory 32
Table 11-2 Clean Closure Performance Standards and Activities[a] 32
Figure 11-1 Sample Clean Debris Surface Checklist 33
Figure 11-2 Closure Strategy Flowchart for Tank Systems 34
Figure 11-3 Closure Strategy for Container Storage, Containment Building, Miscellaneous Unit, and Tank System Secondary Containment Areas 35
Figure 11-4 Closure Strategy Flowchart for Soils and Groundwater 37
Figure 11-5 Example Closure Certification Statement 38
Figure 11-6 WTP Permitting, Deactivation, and Closure 39
Figure 11-7 Closure Schedule for WTP 40

CHAPTER 11
CLOSURE PLAN

Note: Where information regarding treatment, management, and disposal of the radioactive source byproduct material and/or special nuclear components of mixed waste (as defined by the Atomic Energy Act of 1954 as amended) has been incorporated into this document, it is not incorporated for the purpose of regulating the radiation hazards of such components under the authority of this permit or chapter 70.105 RCW and its implementing regulations but is provided for information purposes only.

This chapter is the Resource Conservation and Recovery Act (RCRA) closure plan for the River Protection Project Waste Treatment Plant (WTP) permitted ~~mixed~~dangerous waste management units~~,~~ (DWMUs), as required per the Washington Administrative Code (WAC) 173-303-806(4)(a)(xiii). This closure plan describes the activities that are necessary to close the WTP permitted ~~mixed waste management units.~~DWMUs. The procedures and estimated times to complete these activities are discussed in this plan. Submittal of this closure plan completes the requirement of III.10.C.8.b and Compliance Schedule Item 8.

This closure plan is provided in compliance with the applicable requirements of the WAC 173-303-610, -620, and -806. This plan is also intended to demonstrate compliance with Conditions II.J and III.10.C.8 of the Hanford Facility Dangerous Waste Permit (Ecology 2009).

With several exceptions, this plan follows the format of a typical closure plan as outlined in the *Dangerous Waste Permit Application Requirements* ~~*for Facilities Which Store and/or Treat Dangerous Wastes in Tank Systems and/or Containers (Ecology 1996).*~~ *For facilities that store and/or treat dangerous wastes in tank systems and/or containers. Washington State Department of Ecology Hazardous Waste and Toxics Reduction Program Publication 95-402 (Ecology 2013).* The exceptions are the exclusion of sections that do not apply to the WTP (financial assurance, liability, "already closed disposal unit," and post-closure requirements), and the addition of new sections not addressed in the guidance (closure of tank, miscellaneous unit, container storage, and containment building units).

~~H.1~~11.0 Introduction

This closure plan identifies the steps and procedures necessary to close any WTP permitted ~~mixed waste management unit~~DWMU at any point in its active life. This includes the removal of dangerous and mixed waste and the decontamination of the permitted ~~mixed waste management units~~DWMUs, ancillary equipment, and the associated secondary containment systems. The RCRA closure activities will be consistent with the requirements of the WTP deactivation, decontamination, and decommissioning plan to be prepared under separate authorities. They will be revised as necessary to maintain consistency between the plans. Deactivation of the WTP is discussed further in Sections ~~H~~11.3.2 and ~~H~~11.7.0.
~~H1~~

11.1 Closure Plan Overview

Mixed waste will be handled and stored in the following areas of the WTP, as identified in ~~DWP~~the Dangerous Waste Permit (DWP) and Chapter 4:

Pretreatment plant building

- WTP portion of the waste transfer lines from the double-shell tank (DST) system
- Intra-facility transfer lines between WTP buildings
- WTP portion of the effluent transfer lines from the WTP to the Liquid Effluent Retention Facility (LERF)
- Low Activity Waste (LAW) vitrification building
- High-Level Waste (HLW) vitrification building
- Laboratory
- Effluent Management Facility (EMF)
- Failed Melter Storage

The permitted ~~mixed waste management units~~DWMUs in the WTP are identified in Chapter 4. The WTP ~~mixed waste management units~~permitted DWMUs, including ancillary equipment, secondary containment areas, supporting structures and underlying soil, are addressed in this closure plan. Closure of the pipelines connecting the WTP with the DST system unit and the LERF/ETF will be integrated with those respective facilities. Closure criteria will be developed jointly by ~~DOE,~~United States Department of Energy (DOE), its contractors, and Ecology prior to initiating closure activities. DOE will be responsible for implementing the cleanup standards.

The closure plan indicates several potential Hanford treatment, storage, and disposal (TSD) units that may be used to manage dangerous and mixed wastes generated during closure of the WTP permitted ~~mixed waste management units.~~DWMUs. These identifications are preliminary and are subject to change as the Hanford facility is developed, and as the Hanford Facility Dangerous Waste Permit (Ecology 2009) is modified in the future.

The remainder of the closure plan provides the following information:

-
- Section ~~H~~11.2.0 of the closure plan identifies the regulatory standards that apply to closure, and the processes to be used for developing specific cleanup standards that may be achieved during closure.
- Section ~~H~~11.3.0 describes the overall approach for removing the mixed waste inventory, flushing and decontamination operations, removing and disposing of contaminated equipment and residues, and inspections and sampling to verify clean closure.
- Section ~~H~~11.4.0 describes other activities, including certification of completion of closure, control of run-on and runoff during closure, and equipment reuse.
- Section ~~H~~11.5.0 provides the maximum possible mixed waste inventory.
- Section ~~H~~11.6.0 describes the closure procedures for each type of permitted ~~mixed waste management unit~~DWMU.
- Section ~~H~~11.7.0 provides the schedule for closure.
- Section ~~H~~11.8.0 describes the demonstration required to support a request to extend the standard 90- and 180-day mixed waste removal and closure completion time limits, as specified in WAC 173-303-610(4)(a) and (b).

11.1.1 Closure Plan Revisions

Clean closure is the goal for the WTP permitted ~~mixed waste management units~~DWMUs. The closure plan will be revised if efforts to achieve the clean closure standards are unsuccessful. The WTP may also be closed as a landfill, as provided in WAC 173-303-610, if the clean closure standards cannot be

achieved through the removal of radiological contamination levels and the closure performance standards cannot be achieved. The revised closure plan will be accompanied by a written request for modification of the permit.

The design life of the WTP is 40 years after the initiation of waste treatment operations. The actual operating life of the plant may change depending on expansion in treatment capacity, improvements in treatment technology, or many other factors. The closure plan will be revised and submitted for approval under WAC 173-303-830 (Permit Changes) to incorporate future advances in decontamination technology, changes in plant capacity, newly designated dangerous waste, or other factors that may affect the closure of the WTP permitted ~~mixed waste management units~~DWMUs.

The closure plan may also be revised before the start of closure work, based on relevant information from the operational history of the WTP and the permitted ~~mixed waste management units~~DWMUs, and when information such as decontamination and access of high rad areas becomes available. The final revised closure plan will provide the necessary final detailed decontamination schedule and procedures, sampling and analysis plan, health and safety plan, interface with DST system unit and LERF/ETF closure plans, and additional information dependent on future conditions, as indicated in the following pages. Also, if necessary, a post-closure plan presenting details of any post-closure processes and activities will be submitted to Ecology in accordance with WAC 173-303-610(8).

~~H~~11.2.0 Closure Performance Standard

The WTP permitted ~~mixed waste management units will~~DWMUs will be closed in accordance with the requirements of Conditions II.J and III.10.C.8 of the Hanford Facility Dangerous Waste Permit (Ecology 2009).

Clean closure requires decontamination or removal and disposal of dangerous/mixed waste, waste residues, contaminated equipment, soil, or other material, in accordance with the clean closure performance standards of WAC 173-303-610(2). Clean closure as described in this closure plan will accomplish the following:

- Minimize the need for future maintenance.
- Control, minimize, or eliminate, to the extent necessary to protect human health and the environment, post-closure escape of dangerous waste, dangerous constituents, leachate, contaminated runoff, or dangerous waste decomposition products, to the ground, surface water, groundwater, or the atmosphere.
- Return the land to the appearance and use of the surrounding land areas to the degree possible given the nature of the previous dangerous waste activity.

Activities beyond that point will be decided and documented in the revised plan prior to closure. The WTP buildings will not be used for RCRA-regulated TSD activities following clean closure, unless a new permit is issued.

The appearance of the land where the WTP buildings are located will be consistent with the appearance and future use of the surrounding processing land areas, after completion of clean closure activities. The WTP buildings will remain at the site until final disposition is determined and implemented. The WTP buildings may be demolished, if the buildings will have no future mission. Future land use decisions may be considered during the WTP decommissioning process. The final decision on building disposition and the appearance and use of the plant area will be integrated with the decisions on disposition of the buildings in the adjacent 200 East Area.

The long-term future use of the WTP site and the adjacent 200 Areas was addressed in the *Final Hanford Comprehensive Land-Use Plan Environmental Impact Statement* (DOE 1999). The Central Plateau as defined in that document includes the United States Ecology commercial waste disposal facility, the DOE Environmental Restoration and Disposal Facility (ERDF), and the 200 West and 200 East Areas, as well as the WTP site.

Permitted units where mixed or dangerous wastes have been treated or stored will undergo closure activities. Contaminated equipment, debris, and solid decontamination residues generated during the closure of the WTP permitted ~~mixed waste management units will~~DWMUs will be designated and packaged in accordance with the appropriate regulatory requirements (expected to be the WAC dangerous waste regulations in effect at the time of closure). The dangerous and mixed waste will then be transferred to a permitted TSD unit either on or off the Hanford Site. Equipment and debris that are not adequately decontaminated will be treated to comply with land disposal restriction requirements. Liquid decontamination solutions or agents generated during closure activities will be collected, designated, and disposed of at an appropriate TSD unit.

If a product, residual waste, or decontamination fluid is spilled or released to the environment during closure activities, spill response will be initiated as described in Chapter 7 ~~and Chapter 7A (*River Protection Project – Waste Treatment Plant Emergency Response*~~Contingency Plan~~),~~ and in accordance with WAC 173-303-145(2) and 173-303-360(2)(d) reporting requirements. The residual waste will be collected, designated, and managed appropriately. The waste will be managed in accordance with the appropriate regulatory requirements.

Clean Debris Surface

This closure plan proposes use of a "clean debris surface," defined in the following paragraph, as the clean closure performance standard for the WTP metal structures and equipment and concrete structures that will remain after closure, as well as all of the DWP equipment used for waste management; Attainment of a clean debris surface can be verified visually in accordance with the standard in WAC 173-303-610(2)(b)(ii), incorporating 40 CFR 268.45, Table 1, footnote 3, which states:

> "Clean debris surface" means that the surface, when viewed without magnification, will be free of all visible contaminated soil and hazardous (dangerous) waste except that residual staining from soil and waste consisting of light shadows, slight streaks, or minor discolorations, and soil and waste in cracks, crevices, and pits may be present provided that such staining and waste and soil in cracks, crevices, and pits will be limited to no more than 5 % of each square inch of surface area."

The clean debris surface standard will be achieved by using the physical and chemical extraction techniques identified in ~~40 CFR 268.45, Table 1, incorporated by reference WAC 173-303-140.~~40 CFR 268.45, Table 1, incorporated by reference WAC 173-303-140. The primary method of decontamination may be water washing, followed by a choice of using chemical decontamination solutions, ultrahigh-pressure water technologies, impact technologies such as sand blasting and CO_2 blasting, or other new technologies that may be developed prior to closure. Also, to meet this standard the surface layer may be need to be removed using mechanical equipment such as striking piston heads, saws or rotary grinding wheels, or scabbling equipment. The concrete surface will then be examined to meet the requirement for clean debris surface. These Physical extraction methods that remove up to 0.6 cm of concrete will be used only after the previous technologies have failed to result in a clean-debris

surface, or if there has been a failure of the coated concrete surface. Visual verification may be performed by direct worker observation with written inspection documentation ~~(Figure H-1,~~(Figure 11-1, Sample Clean Debris Surface Checklist), or by other means such as remote-operated closed circuit television and videotape.

Concrete surfaces may be protected with a contamination-resistant protective coating. Protective coatings in good condition may be decontaminated using one of the technologies described above, then inspected to determine if a clean debris surface is present in the same manner as steel or other metal surfaces. If there is evidence that a dangerous/mixed waste release has occurred, such as confirmation of contamination behind a stainless-steel lined breach or identification of damaged or deteriorated protective coating on a concrete floor where a dangerous/mixed waste release has occurred, and if the concrete is adjacent to soil, a contamination investigation may be performed.

If the concrete protective coating exhibits more damage than hairline cracks and has lost integrity, the concrete surface under the deteriorated coating will be treated with aggressive physical extraction technologies, such as high pressure water or scabbling, to remove at least 0.6 cm of material below the original surface. This approach also applies to uncoated concrete behind or beneath stainless-steel ~~lined breaches.~~liners. The exposed concrete will again be inspected to verify that the clean debris surface standard is met. The treatment will be repeated until the clean debris surface standard is met. Closure standards for soil underlying the WTP are addressed in Section ~~H~~11.2.1.

If the clean debris surface standard as described cannot be performed or cannot not be achieved, an alternative method will be proposed in the revised Closure Plan as required by DWP Conditions III.10.C.8.c and III.10.C.8.d.

~~Designation Limit~~

Risk Based Clean Up Standard

Some waste handling equipment metal surfaces cannot be visually inspected (for example, internal pipe, pump, and tank surfaces). A component or portions of a component may be flushed with decontamination solutions if it cannot be decontaminated to meet the clean debris surface standard, or if it cannot be inspected to verify that it meets the standard. The decontamination solution, or rinsate, will be sampled and analyzed using methods complying with *Test Methods for Evaluating Solid Waste, Physical Chemical Methods* (EPA 1986) for indicator constituents. Analytical data that meet the criteria defined in WAC 173-303-610(2)(a) and (b) will indicate successful decontamination and attainment of the clean closure performance standard. The rinsate analysis criterion is hereafter referred to as the ~~designation limit~~risk based clean up standard.

Closure Strategy for Tank Systems

The general closure strategy for tank systems is outlined in flowcharts in ~~Figures H-2 and H-3.~~Figures 11-2 and 11-3. Triple-rinsing followed by visual inspections is an accepted method of decontaminating tanks. However, modification of this technique may be necessary, if determined at a later date.

~~Figure H-2~~Figure 11-2 shows that internal flushing and decontamination of tanks and ancillary equipment, inspection of the secondary containment area, and sealing of observed stainless-steel lined breaches will be performed prior to final decontamination efforts. Disposition of solid and liquid

treatment residuals is shown only at the initial flushing step (below "flush tanks, piping"), to avoid unnecessary complexity in ~~Figure H-2.~~Figure 11-2. The residuals from the following internal and external decontamination steps are expected to follow the same paths.

The two "more decon?" decision boxes in ~~Figure H-2~~Figure 11-2 (following determinations that decontamination efforts so far have been inadequate) are the symbols for the key decisions the future closure managers may have to make:

- Perform additional decontamination to meet the clean closure standard.
- Stop decontamination and designate that tank or ancillary equipment as mixed waste debris to be removed, reduced in size, encapsulated, packaged, and disposed.

~~Figure H-2~~Figure 11-2 does not show that additional decontamination of external tank or other surfaces may be required to continue on the disposal path (after "remove, dispose of as mixed waste") because such additional decontamination, if required, will be due to radiological dose concerns, not dangerous/mixed waste requirements. ~~Figure H-2~~Figure 11-2 also illustrates the assumption that internal surfaces of tanks and ancillary equipment cannot be adequately or efficiently decontaminated and/or inspected to demonstrate that the clean debris surface standard is met, and that the decontamination solution or rinsate ~~designation limit~~risk based clean up standard will apply to all internal tank system surfaces.

Closure Strategy for Secondary Containment Areas

~~Figure H-3~~Figure 11-3 shows the strategy for closure of secondary containment areas. These steps illustrate the approach for decontaminating stainless steel liners and coated concrete surfaces. Secondary containment area liner breaches may need to be sealed prior to decontamination or removal of equipment. The general procedure for investigating liner breaches or breaks, and decontaminating the concrete behind or below such breaches, is shown in ~~Figure H-3.~~Figure 11-3.

The closure strategy for concrete with intact protective coatings is straightforward. If a release of dangerous or mixed waste in the permitted unit has not been documented in the facility operating record, and no evidence of a release is found during the initial closure inspection, the assumption will be made that the concrete floor surface meets the clean debris surface standard.

If a release has been documented, and the concrete does not meet the clean debris standard, decontamination technologies, as described in Section ~~H~~11.2.0, will be performed until the clean debris standard can be met and documented.

If evidence is found that a release has occurred on a concrete floor where the protective coating has even minor cracking, physical extraction will be required. Physical extraction of the concrete surface may also be required if sampling of the area determines there is dangerous waste contamination in areas where the protective coating is substantially damaged or deteriorated; for example, if it is broken or peeling. The extraction will be followed by an inspection and sampling of the surface to verify and document the presence of a clean debris surface. If a release is documented at such a location and the concrete at that location is resting on or against soil, ~~a~~ soil ~~investigation~~sampling may be required. These steps are

illustrated in the last two boxes before the final decision box, "Visible Crack or Decomposed Concrete?" ~~in Figure H-3.~~in Figure 11-3.

Closure Strategy for Soil

The criteria for determining whether additional soil ~~investigation~~sampling is required are shown in ~~the final decision box in Figure H-4.~~Figure 11-4. Contaminated soil will be removed to meet risk-based concentration limits, referred to as the soil cleanup limits (see Section ~~H~~11.2.1). Soil sampling and analyses will be performed after removal to verify compliance with the soil cleanup standard. ~~Figure H-4~~Figure 11-4 shows the strategy for addressing potential impacts to soil ~~and groundwater~~.

Compliance with this plan and attainment of the closure standards will be documented by ~~videotape~~electronic media or written inspection records, such as those shown in the sample checklist in ~~Figure H-1,~~Figure 11-1, the example Closure Certification Statement in ~~Figure H-5,~~Figure 11-5, and other supporting records as discussed in Section ~~H~~11.4.1.

~~H~~11.2.1 Closure Standards for Soils, Groundwater, Surface Water, and Air

The design of the WTP mixed waste management units is intended to prevent the release of dangerous/mixed waste to the soil, groundwater, surface water, or air. Clean closure of the soil beneath the WTP mixed waste management units will be accomplished by demonstrating that the stainless-steel process cell liners, and the coated concrete walls and floors in the secondary containments, have not lost integrity and have therefore prevented contaminants from reaching the soil. If loss of secondary containment integrity has occurred, the potential for soil contamination will be investigated. The demonstrations will consist of performing and documenting inspections and decontamination work, and soil sampling and removal, if necessary.

The need for sampling of soil will be determined on a unit-specific basis ~~per WAC 173-303-610(~~in accordance with WAC 173-303-610(2)(b)(i), and will take into consideration the mixed waste management unit operating history.

Where a dangerous/mixed waste release is known or suspected to have occurred, the following conditions indicate probable secondary containment failure and potential soil contamination: the observation of potential through-thickness cracks or crumbling concrete at a liner breach location or in a secondary containment area with deteriorated concrete floor coating. Potential soil contamination will be investigated through coring and sampling of both the concrete and the soil. Biased sampling will be focused in the vicinity of the liner defect or coating defect, concrete cracks, or in the known or suspected release location. Samples will be analyzed for constituents of concern (COCs). The proposed COCs will be submitted to Ecology with the revised closure plan submitted before the start of closure. The COCs to be used will be developed using process knowledge, operating record, and waste characterization analyses, whenever possible.

The appropriate risk-based cleanup standard will be consistent with the future land-use classification. The standard will be reviewed prior to initiating closure to ensure it is still appropriate. Clean closure concentration limits for soils will be established in accordance with WAC 173-303-610(2)(b)(i). Given the long operating life of the WTP and the current state of assumptions for toxicity data, and regulatory guidance, calculation of specific limits is not appropriate at this time.

In establishing soil clean closure concentration limits, consideration will also be given to "area background", as defined in Ecology's *Guidance on Sampling and Data Analysis Methods (Ecology 1995)*

and in accordance with WAC 173-303-610(3)(a)(v). The TWRS Phase 1 Privatization Site Preconstruction Characterization Report (HNF 1998), *the Hanford Site Background Part 1, Soil Background for Nonradioactive Analytes* (DOE/RL 1995), or other site-specific soil background information will be used to assist in determining background levels in the soil. If the closure soil sample data are at or below the calculated soil cleanup levels, or the site-specific background concentrations, whichever is greater for each constituent, the soil will be considered clean-closed.

Due to the level of secondary containment provided at the WTP, non-permitted releases of dangerous/mixed wastes to soil, groundwater, surface water, or air are not anticipated.

Areas in which soil could have become contaminated will be mapped during the liner or concrete secondary containment area inspection and decontamination process. Soil sampling is addressed in Appendix A, Sampling and Analysis for Closure of WTP Facility (SAP). As necessary, a more detailed sampling and analysis plan may be included in a future revision to the closure plan in accordance with DWP Conditions III.10.C.8.c and III.10.C.8.d~~.that is required under permit condition III.10.C.8.d.~~.. The revised closure plan will be submitted to Ecology for review and approval prior to the initiation of closure. The current SAP is consistent with the Guidance for Clean Closure of Dangerous Waste Units and Facilities (Ecology 2005), as incorporated by reference at WAC 173-303-140(2)(a).

~~H~~11.2.2 Closure Standards for Decontamination of Structures and Equipment

Some of the dangerous/mixed waste-contaminated structures and ancillary equipment that will undergo decontamination during the closure of the WTP consist of equipment with smooth metal surfaces. Concrete and protective coating surfaces in secondary containment areas with stainless-steel liners will also be decontaminated as part of closure. The types of structures and associated equipment that may be decontaminated to meet the clean debris surface standard include, but are not limited to:

- Interior and exterior tank and pipe surfaces
- Secondary containment area stainless steel liners
- Uncoated concrete floors and walls behind stainless-steel liners
- Coated concrete walls and ceilings above stainless-steel lined secondary containment, as necessary
- Coated concrete floors in secondary containment areas

Decontamination of interior surfaces of tanks and pipes and documentation that they meet the clean debris surface standard may or may not be possible, given the current state of decontamination and inspection technologies. At present, the available ~~miniature~~ equipment may not be adequate to remove hardened waste or contaminated corrosion coatings from relatively inaccessible interior tank and pipe surfaces. Similarly, available video equipment may not provide the inspection capability necessary to demonstrate attainment of the clean debris surface standard on interior surfaces. The criteria for whether or not decontamination is possible will be developed and submitted for approval prior to initiating closure activities. In addition, for areas such as the PT and HLW Facility Black Cells and Hot Cells, they are currently provided with spare penetrations that can be used for spray wands if needed during closure activities to facilitate dangerous waste decontamination. If, after decontamination, safe physical access in black cells is not available to perform visual verification during the closure period to ~~enable~~determine if the use of the clean debris surface standard, which requires visual verification, other technologies such as remote operated CCTVs may be used.

Decontamination of equipment and stainless-steel lined secondary containment or liners will be conducted by using water washing and spraying or ultrahigh-pressure water jetting, or other technologies listed in Section ~~H~~11.3.0. Residues from these extraction operations will be collected, sampled ~~as necessary, designated~~ in accordance with WAC 173-303, and transferred to a TSD facility such as the LERF/ETF or the Central Waste Complex (CWC) for treatment, storage, and/or disposal.

Decontamination of intact secondary containment protective coating surfaces on concrete to meet the clean debris surface standard will also be performed primarily through water washing and spraying. Additional technologies that may be used include chemical decontamination solutions, ultrahigh-pressure water technologies, impact technologies such as sand blasting and CO_2 blasting, or other new technologies that may be developed prior to closure. The secondary containment protective coating on concrete is designed and applied to provide a durable, non-porous surface. If decontamination of the impermeable protective coating surface in secondary containment areas cannot be completed through chemical extraction, or if the protective coating has broken, cracked, or peeled away from the concrete, then at least 0.6 cm (0.24 inches) of the underlying concrete will be removed using one or more of the physical extraction technologies. The physical extraction performance standard for concrete is removal of 0.6 cm of the surface layer and treatment to a clean debris surface, as noted in the *Guidance for Clean Closure of Dangerous Waste Units and Facilities* (Ecology 2005), Section 5.6, and as noted in 40 CFR 268.45, Table 1, as incorporated by reference at WAC 173-303-140(2)(a).

Metal surface areas of equipment that cannot be documented to meet the clean debris surface standard may be decontaminated using water washing, followed by a choice of chemical decontamination solutions, ultrahigh-pressure water technologies, impact technologies such as sand blasting, or other new technologies that may be developed prior to closure. Rinsate may be sampled and analyzed, using methods complying with *Test Methods for Evaluating Solid Waste, Physical Chemical Methods* (EPA 1986) for Ecology-approved indicator constituents. If other analytical methods are developed and chosen for use, the closure plan will be revised and submitted for approval. ~~Indicators~~Indicator constituents will be determined on the basis of process knowledge, operating record, and waste characterization analyses, whenever possible.

Analytical data less than ~~designation~~risk-based limits will indicate successful decontamination and attainment of the clean closure performance standard for the tank, piping, or other metal structures and equipment. Documentation ~~of the representative character~~ of the sample and laboratory quality control and quality assurance data will be entered into the closure record as specified in Sections ~~H~~11.3.4 and ~~H~~11.4.1. Concrete and protective coated concrete surfaces will not be addressed using ~~designation~~risk-based limits.

If the metal structure or equipment cannot be considered decontaminated using the clean debris surface or ~~designation~~risk-based limit criteria, or if further decontamination is determined to be impractical due to high radiation levels, waste minimization, cost considerations, or other reasons, it will be packaged using the debris treatment standard for immobilization by encapsulation. The waste will be designated on the basis of process knowledge and transported to a permitted dangerous or mixed waste disposal facility such as Hanford Low Level Burial Ground (LLBG) mixed waste trenches. Examples of equipment that may undergo encapsulation and disposal include, but are not limited to:

- Tanks and pipe
- Melter off-gas duct work, scrubber, condenser, precipitator, and washout holding vessels
- Pumps, agitators, wash rings, and ejectors

Contaminated items and solid decontamination residues removed from the WTP permitted ~~mixed waste management units will~~DWMUs will be designated, packaged, and treated as necessary to meet the waste acceptance criteria of the receiving facility. Sampling of items and solid residues known to be contaminated and intended for disposal is not necessary if process knowledge is adequate to accurately designate the wastes with the proper dangerous waste identification codes. The closure plan will be revised prior to start of closure and will address treatment and disposal plans in more detail.

~~H~~11.2.3 Closure Standards for Tank Systems

At closure of a tank system, the owner or operator is required by WAC 173-303-640(8)(a) to remove or decontaminate dangerous/mixed waste residues, contaminated secondary containment system components (such as liners), contaminated soils, and structures and equipment contaminated with dangerous/mixed waste, and manage them as dangerous/mixed waste, with few exceptions.

For the purposes of the WTP RCRA closure, the standard is interpreted to mean that each tank and associated ancillary equipment, including the secondary containment area, will meet the clean debris surface standard and/or ~~designation~~risk-based limit criteria for rinsate. Indicator constituents or COCs to be used for rinsate evaluation will be determined using process knowledge, including consideration of the available waste characterization data, and other relevant information in the facility operating record.

Inspectable surfaces may be declared clean if they meet the definition of a clean debris surface, including portions of concrete secondary containment with intact protective coating surfaces, and physically-extracted concrete surfaces behind stainless-steel lined breaches, or under abraded or loose protective coating that have had at least 0.6 cm of material removed from the original surface. Rough or inaccessible metal surfaces such as corroded tank secondary containment area liner surfaces, or tank and pipe interior surfaces, may be declared clean when the decontamination solution sample is analyzed, with appropriate quality control and quality assurance as noted in Section ~~H~~11.3.4, and the indicator parameter or COC data are determined to be less than or equal to the ~~designation~~risk-based limits.

If decontaminating a tank system in place is not feasible or is ineffective, an alternative method is to remove the tanks, disassemble them, and decontaminate the tank parts using extraction technologies described under alternative treatment standards for hazardous debris (40 CFR 268.45), as incorporated by reference at WAC 173-303-140(2)(a). With Ecology's concurrence, the decontaminated debris can then be disposed of as non-dangerous (but possibly controlled as radioactive) waste, as indicated in Section 5 of *Guidance for Clean Closure of Dangerous Waste Units and Facilities* (Ecology 2005).

Tank systems will be inspected for compliance with the clean debris surface standard by observing the external and internal metal surfaces. Portions of a tank system that cannot be fully inspected (such as interior surfaces of tanks and attached piping, pumps, ejectors, and welded pipe connections or penetrations) or that may pose as low as reasonably achievable (ALARA) compliance problems, may be decontaminated with chemical or physical extraction technologies. The decontamination solutions from these portions of the system will be sampled and analyzed for indicator parameters, and the results will be compared to waste ~~designation~~risk-based limits. Solid residues will be removed, containerized, designated, and disposed of at a permitted disposal facility as required. The tank or ancillary equipment, if not decontaminated to meet clean debris standard, will be removed, treated as necessary, and disposed of in a permitted landfill. Treatment may include macro-encapsulation or micro-encapsulation, or other processes that comply with land disposal restrictions.

Standards for clean closure of tank system secondary containment are identical to standards for decontamination of secondary containment areas for the container storage, containment building, and miscellaneous units; that is, clean debris surface standard and/or ~~designation~~risk-based limits.

The proposed COCs will be submitted to Ecology and finalized in the revised closure plan to be submitted before the start of closure.

~~H~~11.2.4 Closure Standards for Container Storage Areas

In addition to the requirements of WAC 173-303-610, WAC 173-303-630(10) requires that at closure, dangerous/mixed waste and residues will be removed from the secondary containment system. Remaining containers, liners, bases, and soil contaminated with dangerous/mixed waste or residues will be decontaminated or removed.

Standards for clean closure of ~~clad~~ container storage secondary containment are identical to standards for decontamination of secondary containment areas for the tank system, containment building, and miscellaneous units (that is, clean debris surface standard and/or ~~designation~~risk-based limits). Special requirements for clean closure of several secondary containment areas with coated concrete floors were explained in Section ~~H~~11.2.2.

~~H~~11.2.5 Closure Standards for Containment Buildings

At closure of a containment building system, the owner or operator is required by WAC 173-303-695 (incorporating 40 CFR 264.1102(a)) to remove or decontaminate dangerous/mixed waste residues, contaminated secondary containment system components (such as liners), contaminated soils, and structures and equipment contaminated with waste and leachate, and manage them as dangerous waste, unless WAC 173-303-070(2)(a)(ii) applies.

Standards for clean closure of containment building units are identical to standards for decontamination of secondary containment areas for the tank system, container storage, and miscellaneous units (that is, clean debris surface standard and/or ~~designation~~risk-based limits).

~~H~~11.2.6 Closure Standards for Miscellaneous Units

The owner or operator is required by WAC 173-303-680(2) to close miscellaneous units in a manner that will ensure protection of human health and the environment. Miscellaneous units at WTP include, but are not limited to, melters, scrubbers, condensers, precipitators, reboilers, oxidizers, adsorbers, and filters. The LAW and HLW melters will be removed and replaced several times during the operational life of the WTP. Removal and replacement are not considered closure or partial closure activities. Melters may be replaced according to the schedule based on the design life of the melter components, or replaced when unplanned failure of a component occurs. In either case, ancillary equipment will be removed or disconnected from the melter after molten glass has been removed to the maximum practical extent.

Openings to the LAW locally shielded melter (LSM) will be sealed and the melter will be removed from the LAW vitrification building, after surface decontamination, as a single container.

Spent HLW melters will be placed in a specially designed shield overpack and then removed from the HLW vitrification building to a disposal facility. Failed melters will be placed in the WTP failed melter storage building (container storage area).

~~During closure of the WTP, the failed HLW melters will be dispositioned to meet disposal site waste acceptance criteria.~~
Spent LAW and HLW melters may also be stored in the WTP failed melter storage building (container storage areas) if necessary to accommodate scheduling of treatment and disposal operations, or for other reasons. The melters will be shipped to permitted treatment and disposal facilities. ~~The WTP miscellaneous units that treat liquid mixed waste will be housed in containment building units, caves, and process/hot cells that provide secondary containment.~~
Standards for clean closure of the miscellaneous unit secondary containment areas are ~~the~~identical to standards for decontamination of secondary containment areas for the tank system, container storage, and containment building units (that is, the clean debris surface standard and/or ~~designation~~risk-based limits).

~~H~~11.3.0 CLOSURE ACTIVITIES

This section describes closure activities that will be conducted to meet the clean closure performance standards. Details provided here may change, and if necessary, the plan will be revised to reflect those changes. The facility is scheduled to close at the end of its operating life. If the WTP is shut down prior to this time, an updated closure plan will be submitted prior to start of closure activities. If partial closures of the WTP mixed waste management units are necessary, updates to the closure plan will be submitted prior to initiating closure activities.

Section ~~H~~11.3.1 describes the maximum extent of operations. Section ~~H~~11.3.2 describes the process for removing dangerous (mixed) wastes from permitted units. Section ~~H~~11.3.3 identifies several chemical and physical extraction technologies that may be used to achieve the clean debris surface standard. Section ~~H~~11.3.4 describes the approach for verification sampling and analysis to confirm that decontamination and/or removal activities have attained the ~~designation~~risk-based limit standard. Section ~~H~~11.4.0 describes the procedures to be followed in order to comply with closure certification requirements, to control run-on and runoff during closure, and to reuse equipment from the plant. Section ~~H~~11.5.0 provides the estimated maximum mixed-waste inventory for each type of dangerous/mixed waste management unit. Section ~~H~~11.6.0 describes how each of the four types of permitted units will be closed. The goal for closure of the WTP permitted ~~mixed waste management units~~DWMUs is clean closure, which is contingent on achievement of the clean debris surface standard or verification that indicator constituents in decontamination solutions from the permitted ~~mixed waste management units~~DWMUs are not present in concentrations above ~~designation~~risk-based limits.

Partial closure may be considered for some of the mixed waste management units; that is, one or more treatment processes or tank systems may be closed prior to the start of closure of the entire plant. Closure of a single mixed waste management unit or group of units could be necessary if a process were to be redesigned, eliminating the previous functions of the permitted ~~mixed waste management units.~~DWMUs. Abnormal occurrences could also force partial closure, such as plugging of a tank or piping. Partial closures of the plant are not planned but could result from unforeseen circumstances. The closure plan will be revised to address the specific details for the permitted ~~mixed waste management units~~DWMUs if partial closure is necessary, and the revised plan will be submitted to Ecology for review, approval, and incorporation into the permit prior to start of closure activities.

The following assumptions were made in developing the closure plan:

- The maximum inventory will be present approximately nine months or more before the start of the closure period. This is the case because of the batch nature of the entire WTP treatment

scheme. The treatment systems within the WTP will operate normally until the last portions of this final transfer are treated.

- The pretreatment building and the HLW melter will treat mixed waste and may be fully operational at the start of the closure period. These portions of the WTP will continue to operate during the closure period until the tank system flush solutions and residues are removed from each system to the maximum practical extent and treated before final decontamination begins.
- Operating records documenting the constituents and volumes of the mixed wastes in the storage and treatment areas, and of the mixed wastes previously processed through the facility, will be available. The operating record also will include detailed information on historical releases of dangerous/mixed wastes into secondary containment areas, previous decontamination work, and equipment that is present in secondary containment areas. This information will be directly relevant to final detailed planning of decontamination steps and procedures, especially treatment and disposal of the decontamination solutions and residues that will be generated.
- A release of dangerous/mixed wastes outside ~~permitted mixed waste management unit~~DWMU secondary containment areas will not occur.
- Equipment necessary for dangerous/mixed waste removal and equipment decontamination will be functional or will be repaired or replaced.
- Permitted TSD facilities will be available to receive dangerous and mixed wastes that will be generated during closure.

Overall Closure Approach

After the final waste feed shipment or inventory is processed, the LAW LSM units will be closed and removed from the site. Tanks and piping will be flushed. The flush solutions will be treated in the pretreatment building by filtration and evaporation, and concentrated solids will be immobilized in glass produced in the HLW melter. Immobilized waste may or may not be acceptable at the facilities that accepted standard immobilized low-activity waste (ILAW) and immobilized high-level waste (IHLW) during the operating life of the WTP. Specific disposal plans for this type of waste may not be finalized until submittal of the final revised closure plan prior to start of closure.

The next step in the overall closure approach is to decontaminate the WTP mixed waste management units' components to the maximum feasible extent and remove components that cannot be decontaminated to meet the clean debris performance standards. Contaminated components will be disposed of~~, and the residues and decontamination fluids remaining after treatment operations at the WTP mixed waste management units have ceased will be transferred to the CWC, LERF/ETF or another Hanford Site permitted TSD facility. Other Hanford Site TSD facilities that may be considered for treatment or disposal of closure wastes in addition to the CWC and LERF/ETF include the LLBG, the Waste Receiving and Processing (WRAP) facility, and the Integrated Disposal Facility (IDF~~ in accordance with WAC 173-303-610(5)).

Vitrification treatment will not be available after the last melter is shut down, near the completion of WTP deactivation work. Small quantities of feed waste or flushing residues may remain in tanks after the last melter is shut down, in addition to insoluble adhered coatings in piping and tanks. The remaining aqueous residues may have to be transferred to the LERF/ETF or the CWC for evaporation, precipitation, filtration, solidification, or other treatment.

General Sequence of Closure Activities

The general sequence of activities necessary to close permitted ~~mixed waste management units~~DWMUs within the WTP, and the basis for establishing the order of performing these activities, is summarized in the following discussion:

Dangerous/Mixed Waste Inventory Removal

- Dangerous/mixed waste removal: The nonradioactive dangerous waste, if present, will be removed from the WTP to minimize the possibility of release. Note: dangerous wastes may be generated at the WTP throughout the closure period from maintenance activities.
- Inventory removal: The mixed waste inventory present in the WTP mixed waste management units at the beginning of the closure (primarily heels in the bottoms of tanks) will be removed and processed (pretreated and vitrified) to the maximum practical extent. This removal will minimize the possibility for release and allow decontamination of the equipment to proceed. Tank systems, miscellaneous units, and ancillary equipment will undergo flushing as part of closure activities.

Decontamination

- Liner inspection: After removal of mixed wastes (flushing), but before final decontamination of tanks and other permitted ~~mixed waste management units~~DWMUs begins, each secondary containment area will be inspected to identify potential or apparent breaks, cracks, or separation of the liner or protective coating from the concrete floors and walls. These locations (if any) will be mapped and documented, and sealed by welding or by application of patching or protective coating material, to prevent entry of contaminants during decontamination activities.
- Decontamination: Tank systems and other equipment in the ~~permitted mixed waste management units~~DWMUs will be decontaminated. Additional chemical or physical extraction may be performed before tank systems, piping, or the equipment and equipment support structures in the ~~permitted mixed waste management units~~DWMUs are removed. Extraction will be performed not only to meet clean debris standards detailed in Section ~~H~~11.2.0, but also to minimize the amount of mixed waste constituents that could be readily available for migration or release during equipment removal.

Equipment may be left in place as clean-closed if it can be successfully decontaminated.

Inspection

- Equipment inspection: Tank/miscellaneous units systems and ancillary equipment will be inspected to ensure that the clean debris surface standard and/or rinsate analyses ~~designation~~risk-based limits are met. If necessary, the equipment will be identified as requiring removal, encapsulation, and disposal.

Removal

- Equipment removal: If the permitted equipment cannot be decontaminated to meet the closure performance standard, it will be removed, treated by encapsulation, and disposed at a permitted facility. Size reduction treatment may also be performed.
- Permitted equipment decontamination: After the last batch of waste feed has been fully processed through the WTP, the LAW LSMs will be shut down and removed. Pretreatment process vessels

and lines will be flushed with water or other solutions. Flushing liquids will be determined prior to initiation of closure activities, and if a liquid other than water is identified for use, the closure plan will be revised and submitted for approval prior to initiating closure activities. Flushing wastes will be treated in the pretreatment evaporation, cesium removal, and ultrafiltration processes. The concentrates will be transferred to a HLW melter. Water condensate will be routed to the LERF/ETF. One HLW melter may be operated after shutdown of the LAW LSMs to provide treatment for the solid flushing residues and evaporator concentrates. At the completion of treatment operations, the HLW melter will be shutdown by procedure for melter change out. The HLW failed melters will be disposed of in accordance with LDR requirements and to the degree necessary to meet disposal facility waste acceptance criteria (Section ~~H~~11.3.3). LAW LSMs are not expected to require decontamination or size reduction treatment, other than surface decontamination after the operating equipment openings are closed. Spent HLW melters will be overpacked, and shipped to a permitted disposal facility.

Structure Decontamination

- Building structure decontamination, stainless steel-lined secondary containment areas: Liners in the ~~permitted mixed waste management unit~~DWMU secondary containment areas will be decontaminated using chemical or physical extraction technologies, or both. Most of the secondary containment areas in the mixed waste management units will be lined with stainless steel. Coated concrete floors in secondary containment areas will be decontaminated using only chemical extraction technologies, unless the protective coating is damaged or deteriorated. Damaged protective coating in secondary containment areas, and contaminated concrete under or behind liner breaches, will be decontaminated using physical extraction technologies. Decontamination solutions may be sampled to determine treatment requirements and transferred via existing pipelines to the LERF/ETF if they meet the LERF/ETF acceptance criteria or to another permitted Hanford TSD unit. Structure decontamination activities are described in Section ~~H~~11.3.3.
- Building structure decontamination, concrete secondary containment areas: Examples of mixed waste management units that have coated concrete secondary containment without stainless steel include the condensate tank system, the LAW LSM gallery containment building, ILAW container finishing containment building, and several secondary waste container storage areas. At the time of closure, the facility operating record will be reviewed and each mixed waste management unit will be inspected to determine if releases of dangerous/mixed wastes have occurred in these areas. If a release of dangerous/mixed waste has occurred on a secondary containment concrete floor where the protective coating is even slightly damaged or deteriorated, the concrete in that secondary containment area will be physically extracted to remove at least 0.6 cm of concrete from the original surface. This effort will demonstrate compliance with the clean debris surface standard. If a release is not documented or suspected, minor or hairline cracks may still be accepted in determining that the clean debris surface standard is met. If the secondary containment protective coating is intact, the surface may be decontaminated by chemical extraction. If chemical extraction is unsuccessful, or if the coating is damaged by the chemical extraction, physical extraction will be performed.
- Building examination to verify decontamination: After each mixed waste management unit in each building has been decontaminated, the mixed waste management units will be inspected and closure documentation will be examined to verify that the clean closure standards have been met.

Soil Investigation, Removal, and Verification

- Potentially contaminated soil identification: Areas in which soil could have become contaminated will be mapped during the liner or concrete secondary containment area inspection and decontamination process. Soil sampling protocols will be established and implemented if potentially contaminated areas are identified.
- Soil decontamination: Soil removal will be performed if necessary. A revised closure plan and a post-closure plan per WAC 173-303-610(3) and WAC 173-303-610(7) will be submitted if removal to the established risk-based standards is not feasible.
- Soil sampling to verify decontamination for indicator constituents: The soil will be sampled and analyzed for indicator constituents after the contaminated soil has been removed.

NOTE: Sampling of soil to verify decontamination will be addressed per the SAP and is included as Appendix A of the Closure Plan.

Disposition of Decontamination Wastes

- Disposition of decontamination fluids: Wastewater or chemical extraction solutions from decontamination activities will enter an existing collection system for waste characterization and verification against LERF/ETF waste acceptance criteria. At the final stage of closure, when the transfer pipeline to the LERF/ETF is taken out of service, decontamination solutions may be containerized and transported to the LERF/ETF by truck. Characterization of the closure residues in the permitted ~~mixed waste management units~~DWMUs will be documented based on process knowledge or analysis of the mixed waste treated in the units. If the wastewater cannot be accepted by LERF/ETF, it may be solidified and transferred to the CWC or another available permitted unit.
- Disposition of the building air emission control equipment (i.e., HVAC): Building air emission control equipment will remain in place until decontamination of other WTP components meets the clean closure performance standards. The HVAC equipment will be decontaminated to meet the clean closure performance standard, or will be removed, designated, and packaged to meet the waste acceptance criteria of a permitted disposal facility.
- Disposition of decontamination equipment: Equipment or materials used in performing closure activities will be decontaminated or disposed of at a permitted disposal facility. Personal protective equipment will be disposed of as appropriate.

The general order of closure activities was selected to minimize the potential for release of mixed waste constituents by removing the bulk of the mixed waste constituents early in the closure process. This order of closure also minimizes waste generation by reducing the possibility that decontaminated areas will become contaminated again by ongoing closure efforts.

Detailed scheduling of closure activities depends on the necessary facility functions required to be maintained during the closure period and the degree of contamination in each permitted ~~mixed waste management unit~~DWMU , especially after the mixed waste inventory is removed and decontamination activities start. The large number of tank systems increases the potential for a highly complex schedule. Similar tank systems and other types of permitted ~~mixed waste management units~~DWMUs may be grouped for the purpose of minimizing the bulk and complexity of plans for closure activities. The detailed decontamination operations schedule will be included in the revised closure plan to be submitted before the start of closure activities (see Section ~~H~~11.7.0).

Work will be performed in a manner that minimizes worker exposure to dangerous and/or mixed waste or other workplace hazards and will meet the ALARA principles.

Additional detail will be provided describing waste removal, equipment decontamination, and closure-generated dangerous/mixed waste disposal activities in the revised closure plans to be submitted prior to start of closure.

~~H~~11.3.1 Maximum Extent of Operations

The maximum extent of operations during the active life of the WTP corresponds to the maximum mixed waste inventory with full feed tanks, the melters operating at design capacity, and full storage areas.

The general arrangement drawings in Chapter 4 show the locations of tanks, melters, miscellaneous units, containment buildings, and container storage areas. The dimensions of the permitted dangerous/mixed waste management units are included in Chapter 4 tables.

~~H~~11.3.2 Removing Dangerous/Mixed Waste

The mixed waste feed inventory present in the WTP after the final receipt of waste feed from the DST system unit will be processed before the start of the first phase of closure. The mixed waste will be removed from tank systems to the maximum practical extent. Removal will be continued by processing the last bulk volumes of waste feed through the applicable pretreatment and vitrification systems, and transferring treated ILAW and IHLW to other TSD units or facilities from the container and canister shipping docks. These activities will follow normal operating procedures.

The following description of mixed waste removal is intended to provide a brief overview of the WTP permitted ~~mixed waste management units~~DWMUs closure activities.

At the completion of mixed waste treatment operations, DOE and its contractor will close the permitted ~~mixed waste management units~~DWMUs and deactivate the WTP facilities. Deactivation, when completed, will leave the facilities in a safe, stable, and passive state that can be monitored with minimal cost and minimal requirements for service support from either personnel or active equipment.

The WTP deactivation operations will comprise a large portion of the RCRA closure activities of the permitted ~~mixed waste management units~~DWMUs that will occur between the start of the closure period, as defined in WAC 173-303-610(3)(c)(ii), and the final shutdown of the HLW vitrification system. Closure operations for some permitted ~~mixed waste management units~~DWMUs may begin before the completion of treatment of the final batch of waste feed from the DST system unit.

Overlaps between dangerous/mixed waste management unit closure and the WTP facilities' deactivation activities, and the overall TSD facility permitting process, as defined in the *Hanford Federal Facility Agreement and Consent Order* (Ecology, EPA and DOE 2011) and the implementing attachment known as the *Tri-Party Agreement Action Plan*, Section 6.3, are illustrated in ~~Figure H-6.~~Figure 11-6. The full extent of necessary interfaces, and detailed definition of the intermediate points in this timeline, will not be determined until deactivation and closure planning are finalized before the start of closure.

Vitrified waste in storage at the WTP at the start of the closure period will be shipped to disposal units on the Hanford Site or to other appropriate facilities. If the inventory of untreated waste feed cannot be treated at the WTP, it will be transferred to a permitted TSD facility. Circumstances under which the waste feed inventory would not be treated through vitrification are not accounted for in this closure plan and would require revision of the plan. Properly completed shipping papers and certifications, as applicable, will accompany waste shipments.

Once the final batch of waste feed has been processed, residual heels will be flushed from the tank systems in accordance with deactivation procedures. Wastewater from flushing and decontamination solutions will be filtered, evaporated, and further treated as necessary in the WTP pretreatment building. The removed solids will be sent to the HLW melter. Wastewater will be sent to the LERF/ETF for treatment if acceptance criteria is met, or it will be transported to the CWC or another permitted TSD unit for storage, treatment, and disposal. Treatment in containers could be performed at the WTP if necessary or preferable, and if the resulting waste will meet the CWC or another TSD unit's waste acceptance criteria. The treatment in containers alternative is not likely to be used, due to the relatively large volumes of flush solutions that will be generated.

If non-radioactive waste is present as inventory at the start of the closure period at the dangerous/mixed waste container storage unit, it will be transferred to a permitted off-site facility for treatment or disposal. Non-radioactive dangerous waste generated during the closure or deactivation work will be managed similarly.

The TSD units available at the time of closure, and their waste acceptance criteria, may include additional units that are not available today.

Complete records will be kept as to the date of shipment, waste characterization, waste quantity, destination facility, land disposal restriction certifications and notifications, and other appropriate information for removed dangerous/mixed waste. Specific documentation requirements are discussed in Chapter 3A. This information will be included in the closure documentation supporting certification, which is described in Section ~~H~~11.4.1.

The specific types of off-site treatment and disposal units for dangerous wastes generated during closure will be determined and provided in the revised closure plan to be submitted before closure begins. Interfaces with the DST system unit and LERF/ETF will be specified in the revised plan to be submitted before the start of closure.

~~H~~11.3.3 Decontaminating Structures, Equipment, and Soils

The only structures and equipment that may be contaminated at the start of the closure period are within the ~~permitted mixed waste management unit~~DWMU secondary containment areas. Some of the types of waste handling equipment that may be located in each permitted ~~mixed waste management unit~~DWMU can be determined by review of the design drawings and operating plans. Examples include, but are not limited to, cranes, power manipulators, and welding machines. Many other types of hand tools, instruments, lights and cameras, radiation monitors, buckets, and other equipment may be present in one or more ~~permitted mixed waste management unit~~DWMU secondary containment areas. If contaminated with dangerous/mixed waste, these structures, tools, and equipment will be decontaminated, if feasible, using one or more of the following technologies to achieve the clean closure performance standard:

- Ultrahigh-pressure water jet
- Rotating cavitation water jet
- Soap scrubbing and wet vacuuming
- Steam vacuuming
- Vacuum abrasive blasting
- Soda blasting
- Shot blasting

- Ice blasting
- Hydroblasting
- Grit blasting
- Cryogenic CO_2 pellet blasting
- Sponge blasting
- Etching
- Rotating brushes/honing

More aggressive decontamination methods may be used on concrete if it becomes necessary to remove mixed waste accumulations that extend into the concrete:

- Needle scaler
- Paving breaker or chipping hammer
- Piston scabbler

These decontamination technologies were chosen based upon demonstrated effectiveness in a radioactive environment and the ability to successfully achieve the RCRA closure performance standard. These technologies are covered under the generic physical or chemical extraction technology categories listed in 40 CFR 268.45, Table 1. This approach is consistent with Ecology guidance (Ecology 2005) to achieve clean closure.

Specific methods of decontamination (and removal and disposal if required) of the permitted ~~mixed waste management unit~~DWMU components and equipment will be determined at the time of closure. These methods will be based on information in the operating record, including historical mixed waste releases, and DOE plans for future use of the buildings. The feasibility, or practicality, of decontamination depends on many factors that cannot be fully defined until the closure plan is finalized. Decision criteria may include, but are not limited to, radiation hazards, secondary mixed waste volumes, schedule and budget restrictions, and availability of TSD facilities to receive secondary mixed wastes. Equipment and debris that are not decontaminated will be disposed of as mixed waste.

Decontamination solutions from interiors of tanks, attached piping, and other equipment will be collected in tank drain piping and collection tanks. Decontamination solutions from tank and pipe exterior surfaces, and from decontamination of other free-standing ancillary equipment and secondary containment walls and floors in the four types of permitted ~~mixed waste management units~~DWMUs will be collected in secondary containment area sumps, then transferred by pumping or gravity drainage to plant wash collection tanks. Exceptions to this process may include decontamination of small surface areas where drainage may be captured in portable collection basins or buckets. Transfers of decontamination solutions to the LERF/ETF, CWC or another on-site TSD unit, or if the waste is ~~non-~~not a dangerous mixed waste, to an off-site TSD facility, are addressed in Section ~~H~~11.3.2.

The decontamination solutions and residues will be designated on the basis of process knowledge, or sampling and analysis if necessary, and transferred by existing hard piping to the LERF/ETF. The pipe connection to the LERF/ETF will be one of the last WTP components to be taken out of service, after decontamination activities are complete. The last few decontamination activities may require the collection of wastewater in a temporary sump and container, and will be transported by truck to the LERF/ETF.

Solid residues will be collected into containers by vacuuming or mechanical means (such as sweeping or shoveling), treated, if necessary, at the WTP, CWC, or WRAP to stabilize or solidify the residues, and disposed in the LLBG or a permitted disposal unit on the Hanford Site. Off-site mixed-waste landfill disposal facilities may be considered if an appropriate Hanford Site unit is not available.

Contaminated debris and solid decontamination residues removed from the WTP will be designated and packaged to meet the waste acceptance criteria of the receiving facility. Sampling of equipment and solid residues that are known to be contaminated and are intended for disposal is not necessary, if process knowledge is adequate to accurately designate the waste with the proper dangerous waste identification codes. Process knowledge includes the operating record, which should provide adequate waste analyses and waste processing histories for each permitted ~~mixed waste management unit~~DWMU in the WTP.

Information to support disposal of melters and other debris will be provided in a revised closure plan to be submitted before the start of closure.

~~H~~11.3.3.1 Secondary Containment Structures and Associated Equipment

Within most of the process areas, stainless steel liners supported by steel reinforced concrete structures provide secondary containment for the process tanks, miscellaneous units, HLW melters, LAW melters, and ancillary equipment. Coated concrete surfaces (the walls and ceilings above the liners) in lined mixed waste management areas are not part of the required dangerous waste secondary containment structure, although additional controls may be provided for splashes and airborne contamination. Concrete in stainless-steel lined permitted secondary containment areas, where control of splashes, washdown sprays, or airborne contamination is necessary, will be coated during construction with a durable chemical-resistant impermeable protective coating. Top edges of the liner plates in these secondary containment areas will be sealed to the concrete surface.

Steel liners and coated concrete surfaces will be inspected visually. The visual inspection may be conducted remotely using CCTV. The purpose of the inspections will be twofold: to identify and map cracks that might provide a migration pathway for contaminants and to identify areas that are potentially contaminated with mixed waste or waste residues.

Identified cracks in secondary containment areas will be sealed to prevent infiltration of decontamination solutions between the stainless steel liner and the concrete, or migration into cracks in concrete. Coated concrete and liner surfaces will be decontaminated to achieve the clean debris surface standard using chemical extraction, or if necessary, through physical extraction as described in Section ~~H~~11.2.0.

Secondary containment areas with concrete surfaces are eligible for decontamination by chemical extraction only if the protective coating is intact. Minor cracking in the protective coating will not disqualify the concrete surface from being eligible for classification as a clean debris surface, if that surface has not been directly exposed to dangerous waste as a result of a container leak or some other release mechanism. The facility operating record will be consulted before decontamination work begins to identify those permitted ~~mixed waste management units~~DWMUs where leaks or other dangerous/mixed waste releases have occurred. These permitted secondary containment areas will also be ~~physically~~visually inspected to determine whether the protective coating is intact, and whether undocumented evidence of a mixed waste release is present.

Secondary containment areas with intact protective coatings may be decontaminated with water washing if necessary. If additional decontamination is necessary, other technologies will be used, such as chemical decontamination solutions, ultrahigh-pressure water technologies, impact technologies such as sand blasting and CO_2 blasting, or other new technologies that may be developed prior to closure. Physical extraction methods that remove up to 0.6 cm of concrete will be necessary on concrete surfaces where the protective coating has peeled, bubbled, or is broken (before or after decontamination), exposing bare concrete. Stainless-steel liners may also require physical extraction treatment to remove mixed waste residues or corrosion. Inspections of the concrete and liner surfaces for a clean debris surface will be documented in an inspection record. Details of the decontamination methods to be used will be developed and submitted for approval prior to initiating closure activities.

Concrete and steel grinding, scaling, or scabbling residues will be collected, placed in containers, and sampled and analyzed for indicator constituents~~.~~ (COCs). The ~~parameters, or the~~ residues~~,~~ will be designated based on knowledge of the process or the waste that contaminated the concrete or steel.

The operating record will be reviewed prior to closure to determine if decontamination procedures should be performed in any areas outside the permitted unit secondary containment areas. These areas may include equipment decontamination bays or secondary containment sumps in transfer tunnels, or other locations where mixed wastes may have been generated or transferred during the operating life of the WTP and accidentally released. A final revised closure plan that includes areas identified as a result of the operating record review will be submitted to Ecology for review and approval before closure starts. Floors and walls in non-permitted areas of the building (such as offices, lunch rooms, or bulk storage areas for non-hazardous materials) that do not have documented releases of dangerous or mixed waste are not included in this closure plan.

~~H~~11.3.3.2 Building Air Emission Control Equipment

Building air emission control (i.e., heating, ventilation, and air conditioning, HVAC) equipment will remain in place and in operation as necessary to facilitate deactivation and decontamination of the WTP. HVAC equipment will be taken out of service in stages as radiological contamination is progressively removed or reduced. Compliance with applicable air emission standards and permits will be maintained. Air permits for operations will be evaluated to determine if they will support closure activities. The permits will be modified if necessary.

After completion of decontamination operations that may generate fumes, vapors, or dust that will be controlled by the building ventilation system, the HVAC equipment will be decontaminated, then dismantled, and reduced in size to the extent necessary to facilitate preparation for disposal. DOE may determine that the HVAC equipment will remain in place after closure.

Modifications to air emission standards or other appropriate standards to prevent or minimize the release of dangerous waste or dangerous waste constituents to the air or surrounding environment during closure will be specified in the revised closure plan to be submitted before the start of closure.

~~H~~11.3.3.3 Soil

Discovery of an apparent or potential breach in a cell liner or in the protective coating in unlined permitted secondary containment areas, on an exterior wall, or bottom floor adjacent to soil will require further investigation. The presence of soil contamination will be a unit-specific determination based on WTP records and direct visual or CCTV inspection of the stainless-steel liners and concrete surfaces as described in Section ~~H~~11.2.0. The liner will be removed to allow access for additional investigation and

decontamination if this inspection reveals areas of poor liner integrity such as severe corrosion, weld breaks, or other damage to the steel. Coring and soil sampling will be performed if a liner breach or damaged protective coating is found on a wall or floor adjacent to external soil and if the concrete has lost integrity at that location. If the concrete is not cracked, deteriorated, or porous, and a clean debris surface can be obtained by physical extraction treatment, no further investigation or soil removal may be necessary. If soil is sampled, it will be analyzed for indicator constituents of concern identified on the basis of the mixed wastes contained in that permitted ~~mixed waste management unit~~DWMU during the operating life of the plant.

If soil having levels of contamination that exceed the risk-based soil cleanup levels is found, it will be removed and managed as media containing dangerous waste, and will be designated and disposed of accordingly at a permitted disposal facility. Soil at the limits of excavation will be sampled and analyzed after removals are completed to confirm that the concentrations of dangerous waste constituents are below the risk-based exposure limits. The appropriate risk-based cleanup standard will be consistent with the future land-use classification from the Final Hanford Comprehensive Land-Use Plan Environmental Impact Statement (DOE 1999). Risk assessment principles will be used to establish clean closure concentration limits for soils in accordance with WAC 173-303-610(2)(b)(i).

~~H~~11.3.4 Sampling and Analysis to Identify Extent of Decontamination/Removal and to Verify Achievement of Closure Performance Standard

If there are stainless-steel lined secondary containment breaches or concrete that has lost integrity, efforts to define the extent of contamination will use a graded approach using field screening and survey followed by verification sampling if needed. This section is an outline for a SAP that describes the approach that will be followed for verification sampling. The SAP will also assist in confirming that decontamination and/or removal activities have attained the closure performance standard. Sampling may be employed where the clean debris surface standard cannot be met, such as interior tank and pipe surfaces, or where evidence is found indicating apparent failure of ~~permitted mixed waste management unit~~DWMU secondary containment such as liner cracks.

However, the SAP cannot be finalized at this time because the dangerous waste COCs at each permitted dangerous/mixed waste management unit and restrictions on sampling and analysis activities due to high radiation levels are not adequately defined. Prior to closure, this closure plan will be revised to specify sampling and analysis techniques in a site-specific SAP that may include: sampling to determine the closure performance standards are met, specify extent of dangerous/mixed waste contamination, sampling objectives, analytical parameters, sampling methods and locations, identification of sampling preservation, sampling and data quality control, the evaluation and reporting of data, and the chain-of-custody record.

Additional information, as follows, may be provided in the revised closure plan to be submitted prior to closure:

- Health and safety plan
- Details on sampling equipment
- COC indicator parameters for decontamination solution analyses

- Analytical methods that deviate from *Test Methods for Evaluating Solid Waste, Physical Chemical Methods* (EPA 1986), if any

~~H~~11.3.4.1 Sampling to Confirm Decontamination of Structures and Soil

Sampling of decontamination solutions may be conducted for equipment, structures, and debris that do not meet the clean debris surface standard following the decontamination process. This sampling will serve to define the extent of remaining contamination or confirm adequate decontamination of equipment, structures, or debris. The sampling process will be repeated after each subsequent round of decontamination effort until the decontamination effort is either determined to be successful, or is terminated, and the contaminated component is removed and disposed of as dangerous or mixed waste.

Soil found to be contaminated will be removed as part of the closure activities, and sampling will be performed to confirm that levels of contamination in the remaining soil do not exceed Ecology-approved risk-based soil cleanup levels. The Sampling and Analysis Plan for WTP is referenced in Appendix A.

~~H~~11.4.0 OTHER ACTIVITIES

This section describes the procedures to be followed in order to comply with closure certification requirements, to control run-on and runoff during closure, and to reuse equipment from the plant.

~~H~~11.4.1 Certification of Closure

WAC 173-303-610(6) requires that within 60 days of completion of closure activities of the permitted dangerous/mixed waste management units, a closure certification will be submitted to Ecology. Following completion of closure, DOE (or the DOE-selected contractor) and an Independent Qualified Registered Professional Engineer will submit certifications that the permitted ~~mixed waste management units~~DWMUs have been closed in accordance with the approved closure plan. The certifications will be submitted in accordance with the Hanford Facility Dangerous Waste Permit (Ecology 2009) Condition I.I.1 to ~~-~~the following address:

Program Manager, Nuclear Waste Program
Washington State Department of Ecology
3100 Port of Benton Boulevard
Richland, Washington 99354

The following documentation will be prepared to support the closure certification, and will be provided or accessible to Ecology on request:

Field notes related to closure activities

- A description of deviations from the approved closure plan and justifications for these deviations
- Documentation of the final disposition of dangerous wastes and dangerous waste residues, including contaminated media, debris, and treatment residuals
- Laboratory and field data (including quality assurance and quality control data) for samples and measurements, including those taken to determine background conditions or to determine or confirm clean closure

- A summary report that itemizes the data reviewed by the independent qualified registered professional engineer and tabulates the analytical results of samples taken to determine or confirm clean closure.

A draft decontamination documentation checklist and an example of RCRA closure certification statement are provided in ~~Figure H-1 and Figure H-5,~~Figure 11-1 and Figure 11-5, respectively.

Ecology will verify that the requirements for closure certification are properly completed per WAC 173-303-610(6).

~~If the closure certification is accepted, Ecology will inform DOE of the acceptance in writing.~~

~~H~~11.4.2 Run-on and Runoff Control

No runoff or run-on resulting from precipitation or surface water flows is anticipated in the areas undergoing closure. The WTP permitted dangerous/mixed waste management units are enclosed within highly secure reinforced concrete and steel frame buildings, with the exceptions noted below. Wash water or other liquids resulting from decontamination activities will be contained by WTP containment structures - floors, walls, ceilings, sumps, and catch tanks.

The only permitted ~~mixed waste management units~~DWMUs that may be exposed to direct precipitation are the two process condensate vessels outside the pretreatment building. The failed melter storage building will be a separate freestanding unit, and run-on or runoff control will be assured for this unit before and during operation of the WTP, as well as during the closure period. There will be no changes in the secondary containment capacities or runoff control design for this unit during closure activities.

Activities such as groundwater monitoring and run-on and runoff control will be described in a revision to the closure plan prior to closure.

~~H~~11.4.3 Equipment Reuse

- Equipment may be decontaminated and reused during or after closure, if practicable. For example, contaminated (radiological) material and handling equipment such as shield doors, cranes, and power manipulators may be decontaminated in order to reduce radiation dose rates. This will allow initial or repeated personnel entry to areas where additional decontamination, debris size reduction, or packaging and encapsulation activities will be conducted. Equipment described in Sections ~~H~~11.3.0 and ~~H~~11.6.0 will be decontaminated using methods selected from those specified under 40 CFR 268.45, or equivalent technologies.

Criteria for determining whether equipment will be reused or disposed of include the following:

- Degree of contamination (radiological)
- The need to minimize potential worker radiation and dangerous/mixed waste exposures during decontamination; the amount of decontamination residues that would be generated
- The value of the equipment
- Compliance with the approved schedule and budget

Equipment that could be used by DOE in future operations at the WTP site, in other Hanford projects, or at different DOE facilities, may be decontaminated first.

~~H~~11.5.0 MAXIMUM WASTE INVENTORY

The estimated maximum mixed waste inventory for each type of permitted ~~mixed waste management unit~~DWMU is listed in ~~Table H-1.~~Table 11-1. These are total storage capacity volumes from the WTP Part A ~~form in Chapter 1~~.

The actual volumes present at the start of the closure period will be much less than values shown in the table. For example, the containment buildings and container storage areas may be empty or nearly empty on the date of completion of treatment of the final volume of waste feed, and the tank systems are not likely to contain more than a few percent of the maximum capacity.

~~H~~11.6.0 CLOSURE OF TANKS, CONTAINER STORAGE, CONTAINMENT BUILDINGS, AND MISC. UNITS

This section of the closure plan identifies specific closure requirements for each type of permitted ~~mixed waste management unit~~DWMU at the WTP, and describes the removal of wastes and equipment, decontamination of the unit, and disposition of decontamination residues. A summary of the closure standards and activities for each type of permitted ~~mixed waste management unit~~DWMU is provided in ~~Table H-2.~~Table 11-2.

The performance standards and closure activities for many of the mixed waste management unit components are similar or identical for the four types of units, as indicated in the table. Differences in the detailed closure procedures will be due in part to variations in permitted ~~mixed waste management unit~~DWMU design, and different ancillary equipment present in various units, even in units of the same type. ~~-~~In the process cells/caves secondary containment areas for tanks or miscellaneous units, initial decontamination activities will be performed remotely, while the same types of activities may be performed by personnel in most of the other mixed waste management units, such as container storage units.

An overall estimate of the volume of closure wastes to be generated has not been prepared, due to the uncertainties regarding final disposition of the WTP equipment and structures. The estimate of the volume of closure wastes will be provided in an amended closure plan and submitted for approval prior to initiating closure activities. The volume of decontamination wastes that will be generated may be relatively large if most of the tanks, piping and related equipment, and major portions of the concrete and steel structures are removed and disposed of as waste. Volume of wastes may also be large if the same equipment and structures are completely decontaminated, resulting in large amounts of secondary residues, personnel protective equipment, and decontamination solutions. The volume of immobilized waste that will be generated during the closure period depends in part on the composition of the final batch of waste feed, which cannot be predicted at this time.

~~H~~11.6.1 Closure of Tank Systems

Tank systems will be decontaminated using chemical and/or physical extraction technologies. Types of tank systems that will be decontaminated include, but are not limited to, the following:

- LAW and HLW feed and storage tank systems

- Evaporators and condensers
- Waste filtration tanks
- Ion exchange tanks
- PTF condensate tanks
-
- EMF tank systems

Types of ancillary equipment that may be decontaminated include, but are not limited to, the following:

-
- Waste transport, rinse, and washdown piping
- Pumps, agitators, wash rings, and ejectors
- Air, steam, and water lines in secondary containment areas
- Intra-facility pipelines

Decontamination of tank systems including tanks, piping, and other ancillary equipment will be conducted using chemical extraction technology and water washing and spraying. High-pressure steam or other physical extraction technologies identified in Section ~~H~~11.3.3 will also be used to remove contamination if necessary. The decontamination procedures for closure of tanks will include, but may not be limited to, the following:

- Tank systems will be flushed after the final batch of bulk waste has been processed through that tank system. Large-volume flush solutions will remove as much waste as possible before smaller scale decontamination work begins. Flush water will be transferred to the pretreatment evaporation and ultrafiltration systems, and the concentrates will be sent to the HLW melter for vitrification, if the HLW vitrification system is operating. (If either or both vitrification systems will not be operating during the first phase of the closure period, this closure plan will be revised to account for changes in treatment and disposal of waste feed and flushing wastes, as necessary.) Water condensate from the evaporator will be routed to the LERF/ETF. The HLW melter will be shut down after flushing wastes are treated. Tank decontamination activities to be performed after completion of flushing may involve any of the chemical or physical extraction technologies identified in Section ~~H~~11.3.3. Used decontamination solutions will be transferred to the LERF/ETF or another permitted TSD facility.
- Physical evidence of mixed waste contamination in the secondary containment systems may be used, in addition to the operating record, to determine whether decontamination of the exterior of a tank system is needed. Before using decontamination solutions on the outside of a tank, the floor and wall liners will be inspected for cracks or other breaches. The cracks will be sealed before beginning decontamination treatment, or other engineered containment devices (such as collection basins) will be used to collect and contain solutions. The outer tank surface then will be cleaned with water or detergents, or other technologies as necessary, and rinsed. Decontamination of secondary containment for permitted ~~mixed waste management units~~DWMUs will be similar or identical to the procedures used for mixed waste container storage and containment building units.
- After the tanks are decontaminated, the tank interiors may be inspected using CCTV cameras to determine compliance with the clean debris surface standard. Because of possible radiation exposure, visual inspection of the process cells may be performed remotely using a camera with a zoom lens, or using another device that allows verification that the standard is met. Inspections will be documented in an inspection record.
- The outside of the tanks also will be inspected for compliance with the clean debris surface standard, and inspections will be documented in an inspection record.

- If tanks or ancillary equipment cannot be determined by visual inspection to meet the clean debris surface standard, the tanks may undergo further decontamination, or rinsate samples may be obtained to determine if the decontaminated tank meets the ~~designation~~risk-based limit performance standard for clean closure. Before or after decontamination efforts, a tank system may be designated as mixed waste debris, removed, reduced in size, packaged, treated by encapsulation, and sent to a permitted disposal facility.
- Decontamination residues will be collected, designated, and transferred to a permitted disposal facility.

The decontamination procedures for piping and ancillary equipment will include, but will not be limited to, the following activities:

- The facility design and process information, in combination with operating records, will be used to identify the equipment associated with treatment of mixed waste. Piping that may have carried mixed waste or may have become externally contaminated with mixed or dangerous waste will undergo decontamination. Contaminated piping may include waste transfer piping, sump contents transfer piping, nitric acid transfer piping, and other piping associated with waste treatment and secondary waste transfer.
- The piping will undergo bulk flushing at the same time the tanks are flushed. Flushing of the pipes and other ancillary equipment will remove the waste in order to meet the clean debris surface standard. Chemical and/or physical extraction technologies may be used to attempt to remove the remaining waste from piping and other ancillary equipment. Where it is not possible to visually verify that the clean debris surface standard has been met, verification may be attempted by rinsate sampling, analysis, and comparison of analyses with ~~designation~~risk-based limits.
- If it is not possible to meet the clean debris surface standard or ~~designation~~risk-based limits, contaminated portions of the piping and ancillary equipment will be removed, designated as dangerous/mixed waste, packaged in waste containers, transferred to the CWC or another permitted unit, encapsulated, and disposed of at a permitted landfill disposal unit on the Hanford Site. Encapsulation may be performed at the CWC or elsewhere.

~~H~~11.6.2 Closure of Container Storage Areas

Each permitted mixed waste container storage unit will be evaluated for historical spills or other releases of dangerous or mixed wastes by review of the facility operating records and by visual inspection. The ~~Visual~~visual inspections will determine if the container storage unit can be declared clean using the clean debris surface standard by checking for signs of any spills and/or releases of waste and loss of integrity, breaks, cracks, gaps, and other signs of deterioration of container storage area floors. If the record review and inspection support the conclusion that no releases of dangerous/mixed waste to the floor occurred, no further decontamination or sampling work will be required for that permitted mixed waste container storage unit. If either the inspection or record review indicate that dangerous/mixed waste releases to the floor of a mixed waste container storage occurred, decontamination will be required. If the protective coating is intact, physical extraction treatment will not be performed. If the coating is cracked or more severely damaged, physical extraction treatment will be required to remove at least 0.6 cm from the original surface. If the extent of the historical releases (the actual location on the floor) cannot be determined, the entire floor surface of the container storage area will be treated. If the resulting surface cannot be documented as a clean debris surface, the treatment may be repeated or the full thickness of the floor may be removed. The solid residues or rubble produced by treatment or removal will be disposed of as dangerous/mixed waste, unless sampling and analyses are performed to support a request for an Ecology determination that the rubble is not dangerous/mixed waste.

The presence of through-thickness cracks or other loss of integrity, if found in concrete floors that rest directly on soil, in secondary containment areas where dangerous/mixed waste releases are documented or suspected, may require a soil contamination investigation. Examples of adequate evidence that a release may have occurred include discoloration or staining of the concrete, odor, or elevated radiation readings observed during the initial closure inspection. Soil and possibly concrete samples will be obtained by coring in the vicinity of known or suspected mixed waste releases. Soil contaminated at concentrations above the risk-based soil cleanup levels will be removed, and confirmation samples will be taken at the limits of the excavation to confirm adequate removal. If analytical results are less than the Hanford soil background levels but greater than the risk-based soil cleanup concentrations, a request for approval of a clean closure-determination will be submitted to Ecology. The request will be supported with the analytical and other pertinent data for that mixed waste container storage unit.

If soil contamination is so extensive that the zone of contamination cannot be practically removed, or if groundwater contamination could result, the closure plan will be revised to provide for additional investigation and measures to address corrective action requirements.
Decontamination documentation will be prepared as described in Sections ~~H~~11.3.4 and ~~H~~11.4.1.

~~H~~11.6.3 Closure of Containment Building Units

One containment building unit, the pretreatment plant hot cell maintenance area containment building unit, will be used for secondary waste (mostly debris) decontamination, size reduction, and packaging operations throughout the operating life of the WTP. It may be used for these same functions during the closure period. The HLW melter (cave) containment building may be used for similar operations during closure, after the normal melter operations have been completed. In particular, the HLW melter containment building may be used to partially decontaminate and overpack failed HLW melters that were stored in the failed melter storage building (container storage area) during the operating life of the plant.

After completion of operations to facilitate closure of other permitted ~~mixed waste management units~~DWMUs, the melters and associated spent parts, feed apparatus, and off-gas control equipment will be removed. The containment buildings will be closed in the same manner, following the same inspection, decontamination, and documentation requirements identified in Sections ~~H~~11.6.1 and ~~H~~11.6.2 for tank system secondary containment areas and mixed waste container storage units. Several significant differences in design and mixed waste types may result in substantially longer time requirements for closure of the permitted containment building units, as compared to mixed waste container storage units. For example, most operations in the HLW melter cave will be conducted with remotely operated equipment until the final decontamination stages are reached. ~~–~~Complex remote operations are necessarily slow, and the full extent of necessary decontamination, size reduction, and packaging work will not be known until the final stages of closure. The ILAW ~~container finishing line and container fixative~~ containment building units are also larger and contain more equipment than most of the mixed waste container storage units.

Other containment building units are more similar to mixed waste container storage units, including coated concrete rather than cladded floors and walls. These containment buildings will be closed in the same manner as the mixed waste container storage units (Section ~~H~~11.6.2), with the added complications of various types of waste handling equipment such as power manipulators, cranes, and the LAW LSMs.

~~H~~11.6.4 Closure of Miscellaneous Units

The HLW and LAW melters are miscellaneous units. Several times during the life of the WTP, spent melters will be removed from the HLW melter cave and LAW LSM gallery containment buildings. Removal and replacement of spent melters is not considered closure. One or more of the LAW melters may actually be removed and not replaced before the start of the closure period. The HLW melter is planned to be operating during the deactivation period (the first part of the closure period). If necessary, the HLW melter may be removed and replaced during the closure period to provide treatment for the residues from tank system flushing operations. Such removal and replacement would not be considered closure, although it may occur during the closure period.

LAW melter operating equipment openings will be closed and the exterior surfaces decontaminated. The melters will be removed from the LAW melter gallery as intact assemblies, encapsulated, if required, and shipped to the LLBG or another permitted treatment/disposal unit. Failed HLW melters may be stored during the closure period, while treatment, transport, and disposal operations are arranged. HLW melters may be partially decontaminated and packaged in an overpack in the HLW melter cave during the final phases of closure activities. HLW melters in the failed melter storage building (container storage area) may be returned to the HLW melter cave for partial decontamination and packaging. Both types of melters will be treated in accordance with the immobilization treatment standard and disposed of at permitted mixed waste disposal facilities.

Removal of melter components will be accomplished according to standard procedures for the operational period of the plant. Special HLW melter closure activities, such as size reduction, decontamination of components, or packaging of components and decontamination residues, may require the development of new procedures or the installation of new equipment.

Other miscellaneous units such as offgas scrubbers, condensers, precipitators, reboilers, oxidizers, and adsorbers will be closed in the same manner, following the same inspection, decontamination, and documentation requirements identified in Sections ~~H~~11.6.1 and ~~H~~11.6.2 for tank systems and container storage areas.

~~H~~11.7.0 SCHEDULE FOR CLOSURE

For the purposes of this closure plan, the design life of the WTP is estimated at 40 years of operations. The estimated three-year schedule for closure is provided in ~~Figure H-7.~~Figure 11-7.

As required by WAC 173-303-610(3)(c), WTP will notify Ecology at least 45 days before the date on which the closure period is expected to start. In addition, WAC 173-303-610(3)(c) requires that the closure period begin no later than 30 days after the date on which WTP receives the final volume of dangerous waste. Due to the complexity of the WTP operations, the 30-day requirement to start closure activities will likely be unable to be met. Processing of the final batch of waste feed may require approximately nine months after receiving the final waste feed transfer from the DST system unit. Additional evaluation of the schedule will be conducted prior to closure.

The date of receipt of the final volume of bulk waste feed in the melters and various other specific individual permitted ~~mixed waste management units~~DWMUs within the WTP will be at the end of the processing of that final batch of waste feed. This date will roughly correspond to the date of the start of deactivation operations. The pretreatment and HLW feed preparation and melter systems may continue to operate for several months after the start of the closure period. These systems will be processing the tank

system flush solutions and producing immobilized waste glass containing most of the residual waste constituents left in the tanks at the start of the closure period.

The year the WTP permitted ~~mixed waste management units~~DWMUs close will depend on the time required for the initial portion of the tank waste inventory to be processed, the degree of success in this mission, and whether the WTP will be used to continue to process the remaining Hanford tank waste inventory. Other factors that could affect the year of closure include changes in operational requirements, lifetime extension upgrades, a different operating contractor, and other unforeseen factors.

This estimated three-year closure schedule is necessarily general and is not meant to be definitive. For example, completion of decontamination of the pretreatment building and residue removal is shown at approximately 21 months after the start of the closure period. However, decontamination of the LAW, EMF and HLW vitrification plant tanks and other permitted ~~mixed waste management units~~DWMUs is expected to require use of pipelines through the pretreatment building to transfer decontamination solutions and rinsates to the LERF/ETF. Therefore, the final decontamination of piping and collection tanks in the pretreatment building may not be completed until after the LAW, EMF and HLW vitrification plant tanks and other permitted ~~mixed waste management units~~DWMUs are decontaminated.

A more specific schedule will be provided in the revision of this closure plan prior to the start of closure activities. The revised schedule will take advantage of final design and operating procedure information that is not available at this time. The schedule for closure will include a breakdown of activities to be performed after the date of completion of vitrification processing of the last batch of waste feed from the DST system.

~~H~~11.8.0 EXTENSION FOR CLOSURE TIME

The following discussion addresses the extension of the dangerous/mixed waste removal and closure time periods as specified in WAC 173-303-610(4)(a) and (b), respectively. The first citation requires that within 90 days after receiving the final volume of dangerous waste (the DST waste), the owner or operator will treat, remove from the dangerous/mixed waste management unit, or dispose of all dangerous wastes in accordance with the approved closure plan. The second requirement is that all closure activities will be completed within 180 days after receiving the final volume of dangerous waste.

The need for more than 90 days to remove dangerous/mixed wastes and more than 180 days to complete closure activities is anticipated. This need is due in part to the high radiation fields in many of the mixed waste management units, even after the entire bulk waste inventory has been processed and the residues (the inventory present at the start of the closure period) are removed by flushing. Processing of the final batch of waste feed may require approximately nine months of operation at or near design capacity of the plant, prior to the start of deactivation and closure work. As explained in Section ~~H~~11.7.0, these processing operations will be completed, or nearly completed, at the start of the closure period.

The large number of mixed waste management units and extensive integrated ancillary equipment such as piping, valves, filters (mostly welded together), and the need to coordinate closure activities with other TSD units both at Hanford and offsite, means that more time will be required for closure than would be necessary for a typical dangerous waste management facility.

The decontamination operations described in this closure plan are intended to avoid excessive secondary waste generation and to provide for the recycling of some pieces of equipment. The decontamination operations will include extensive use of chemical and physical decontamination treatment technologies. Incineration is not considered as an option for dangerous/mixed wastes to be generated during closure.

Solidification, encapsulation, and landfilling of dangerous and mixed wastes will be deliberately minimized. The volumes of wastes that will be disposed of will also be minimized to the extent practical by physical size reduction. Size reduction will allow packaging of large tanks, pipe, and support structures in relatively small, densely packed drums or waste boxes. These waste management priorities are emphasized to support this request for extension of the waste removal and closure periods, as suggested in Section 8.3 of the *Ecology Guidance for Clean Closure of Dangerous Waste Units and Facilities* (Ecology 2005).

The WTP operator will take the actions necessary to prevent threats to human health and the environment from the unclosed but not operating WTP, including compliance with applicable permit requirements. During the first several months of the closure period, a large portion of the plant will be operating to remove waste residues from the tank systems to the maximum practical extent. Flushing, vitrification, and other deactivation activities will require continued security and monitoring of the other non-operating portions of the plant, and no part of the plant will be unsecured or abandoned during the closure period.

If necessary, an extension of the three-year closure schedule will be requested and the need for the extension demonstrated in accordance with WAC 173-303-610(4)(a) and (b). The request would be determined prior to initiating closure activities, or during closure activities should closure conditions necessitate. A revised closure plan will be submitted for approval if an extension is necessary.

Condition II.R.1 Hanford Facility Dangerous Waste Permit (Ecology 2009) requires the Permittees to notify Ecology in writing, as soon as possible, of deviations or expected deviations from the schedules of the permit. The Permittees will include with the notification information supporting their claim that they have used best efforts to meet the required schedules. If Ecology determines that the Permittees have made best efforts to meet the schedules of the permit, Ecology will notify the Permittees in writing by certified mail that the Permittees have been granted an extension. Such an extension will not require a permit modification under Condition I.C.3. Should Ecology determine that the Permittees have not made best efforts to meet the schedules of the permit, Ecology may take such action as is deemed necessary. Copies of correspondence regarding schedule extensions will be kept in the operating record.

Condition II.R.1 Hanford Facility Dangerous Waste Permit (Ecology 2009) provides that any schedule extension granted through the approved change control process identified in the *Hanford Federal Facility Agreement and Consent Order* (Ecology, EPA, and DOE 1998) will be incorporated into the permit. Such a revision will not require a permit modification under Condition I.C.3.

11/2016

Table ~~H~~11-1 Maximum Waste Inventory

Mixed Waste Management Unit	Maximum Inventory [a]
Total container storage	1,089,000 gal
Total tank storage	5,~~276~~717,000 gal

[a] Miscellaneous (e.g., melter and offgas equipment) and containment building units are not counted, as they will be processing the volumes previously stored in tanks, and producing treated and secondary wastes that are included in the container storage total.

Table ~~H~~11-2 Clean Closure Performance Standards and Activities[a]

Mixed Waste Management Unit Type	Components	Performance Standards	Closure Activities
Tank system	Exterior surfaces Interior surfaces Ancillary equipment Secondary containment	Clean debris surface, ~~designation~~risk-based limits, or removal	Extraction technologies or removal of tanks Liner and concrete decontamination and/or removal
Container storage area	Floor, walls, and ancillary equipment	Clean debris surface, ~~designation~~risk-based limits, or removal	Extraction technologies Liner and concrete decontamination and/or removal
Containment building	Floor, walls, and ancillary equipment	Clean debris surface, ~~designation~~risk-based limits, or removal	Extraction technologies Liner and concrete decontamination and/or removal
Miscellaneous units (melter)	Melters and ancillary equipment	Removal	Removal
Miscellaneous units (others)	Exterior surfaces Interior surfaces Ancillary equipment Secondary containment, as applicable	Clean debris surface, ~~designation~~risk-based limits, or removal	Extraction technologies or removal of miscellaneous units Liner and concrete decontamination and/or removal

[a] Refers to WAC 173-303-610 and 40 CFR 268.45, Table 1, as incorporated by reference at WAC 173-303-140 (2)(a).

Figure ~~H~~11-1 Sample Clean Debris Surface Checklist

DECONTAMINATION CHECKLIST

This checklist is intended to document decontamination work and the attainment of a clean debris surface for the following components, structures, and materials.

1 Building or location:
2 Component or Area:
3 Material (such as concrete, metal):
4 Decontamination treatment method[1]:
5 Decontamination treatment parameters:
– Temperature
– Propellant
– Solid media (such as shot, grit, beads)
– Pressure
– Residence time
– Surfactants
– Detergents
– Grinding or striking media (such as wheels, piston heads)
– Depth of surface layer removal in cm (in concrete, for example)
– Other

The decontamination of the building, component, or material identified in steps 1 through 3 was completed as specified at steps 4 and 5.

Title	Signature	/ Date

6 Performance Standard:

I have visually inspected the above-identified material before / after (circle one) decontamination or treatment in accordance with the closure plan. Dangerous waste residues have / have not (circle one) been removed to attain a clean debris surface[2].

Authorized Representative	Signature	/ Date

Notes:

1 Decontamination treatment will use a chemical or physical extraction method as listed in Table 1, Alternative Treatment Standards for Hazardous Debris (40 CFR 268.45).
2 Clean debris surface as defined in Table 1, Alternative Treatment Standards for Hazardous Debris (40 CFR 268.45): "'Clean debris surface' means the surface, when viewed without magnification, will be free of all visible contaminated soil and hazardous waste except that residual staining from soil and waste consisting of light shadows, slight streaks, or minor discolorations, and soil and waste in cracks, crevices, and pits may be present provided that such staining and waste and soil in cracks, crevices, and pits will be limited to no more than 5 % of each square inch of surface area."

Figure ~~H~~11-2 Closure Strategy Flowchart for Tank Systems

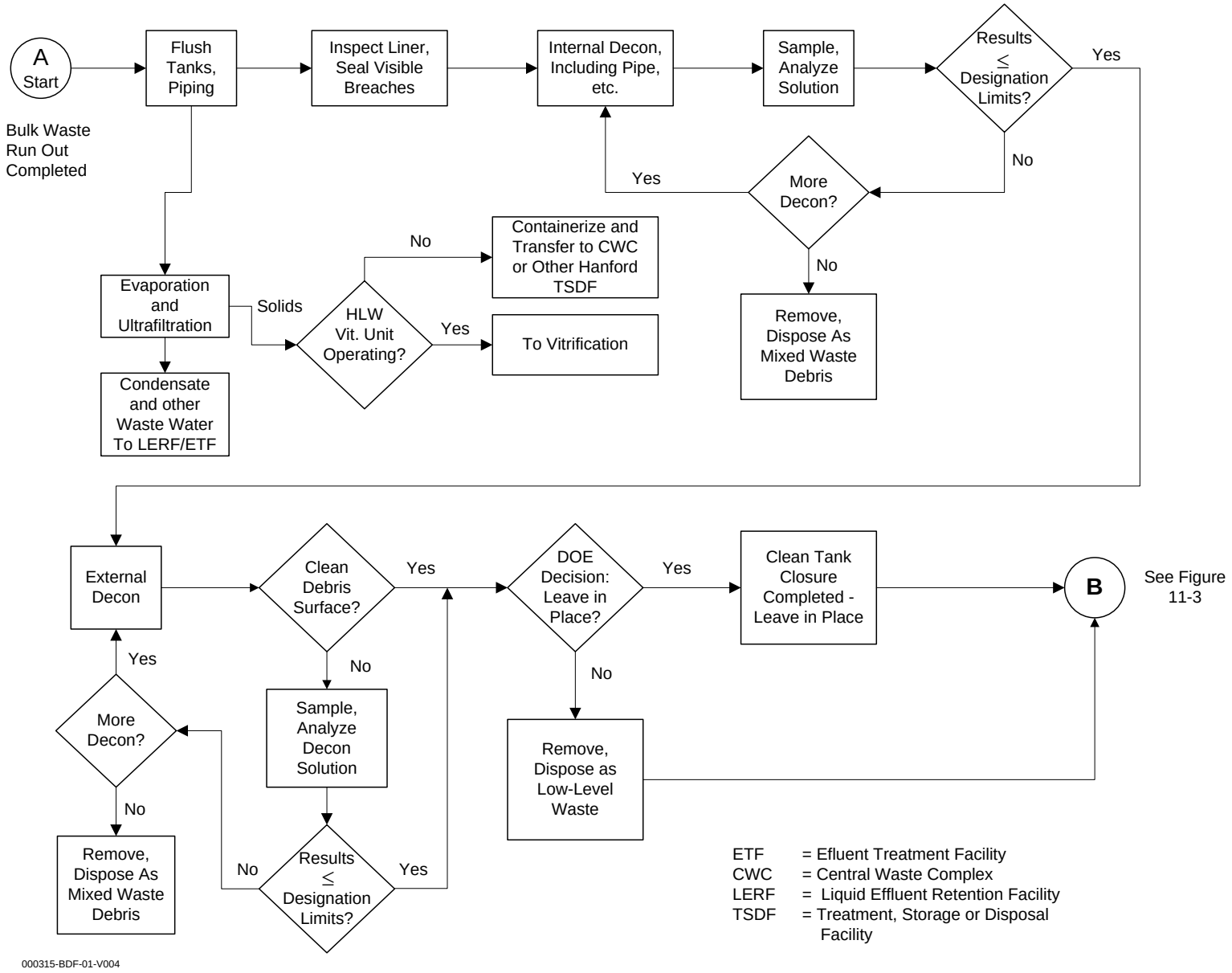

11/2016

Figure ~~H~~11-3 Closure Strategy for Container Storage, Containment Building, Miscellaneous Unit, and Tank System ~~-~~Secondary Containment Areas

11/2016

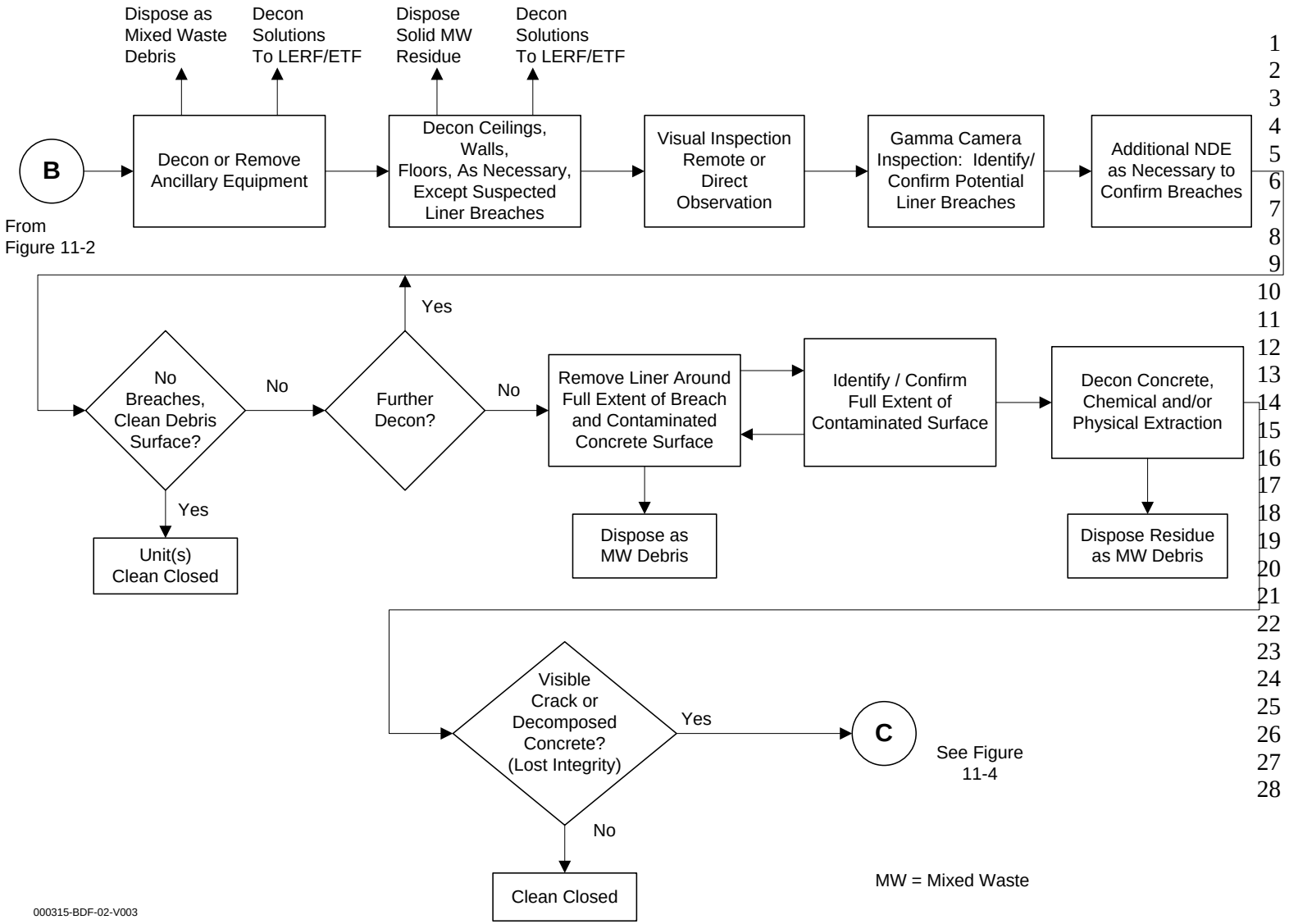
Dispose as Mixed Waste Debris
Decon Solutions To LERF/ETF
Dispose Solid MW Residue
Decon Solutions To LERF/ETF
B
From Figure 11-2
Decon or Remove Ancillary Equipment
Decon Ceilings, Walls, Floors, As Necessary, Except Suspected Liner Breaches
Visual Inspection Remote or Direct Observation
Gamma Camera Inspection: Identify/ Confirm Potential Liner Breaches
Additional NDE as Necessary to Confirm Breaches
Yes
No Breaches, Clean Debris Surface?
No
Further Decon?
No
Remove Liner Around Full Extent of Breach and Contaminated Concrete Surface
Identify / Confirm Full Extent of Contaminated Surface
Decon Concrete, Chemical and/or Physical Extraction
Yes
Unit(s) Clean Closed
Dispose as MW Debris
Dispose Residue as MW Debris
Visible Crack or Decomposed Concrete? (Lost Integrity)
Yes
C
See Figure 11-4
No
Clean Closed
MW = Mixed Waste
000315-BDF-02-V003

11/2016

Figure ~~H~~11-4 Closure Strategy Flowchart for Soils and Groundwater

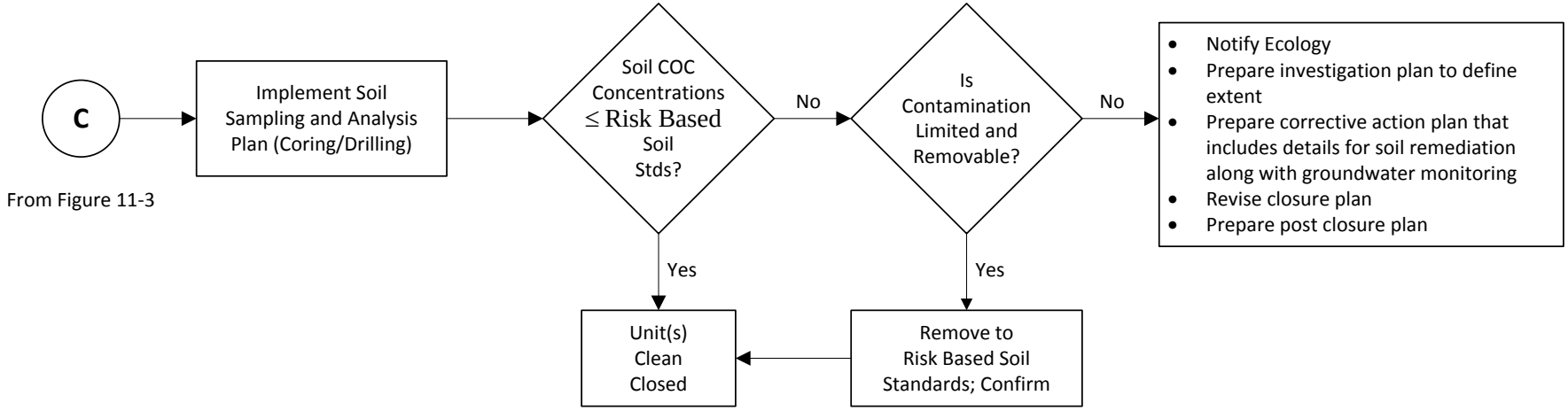

COC = Constituents of Concern

11/2016

Figure ~~H-5~~11-5 Example Closure Certification Statement

RCRA CLOSURE CERTIFICATION
FOR

River Protection Project – Waste Treatment Plant
Hanford Site
US Department of Energy, Richland Operations Office

We, the undersigned, hereby certify that _____ closure activities were performed in accordance with the specifications in the approved closure plan.

Owner/Operator	Signature	/ Date
Contractor Representative	Signature	/ Date
Independent Registered Professional Engineer	Signature	/ Date

Washington State PE # _____

Figure ~~H-6~~11-6 WTP Permitting, Deactivation, and Closure

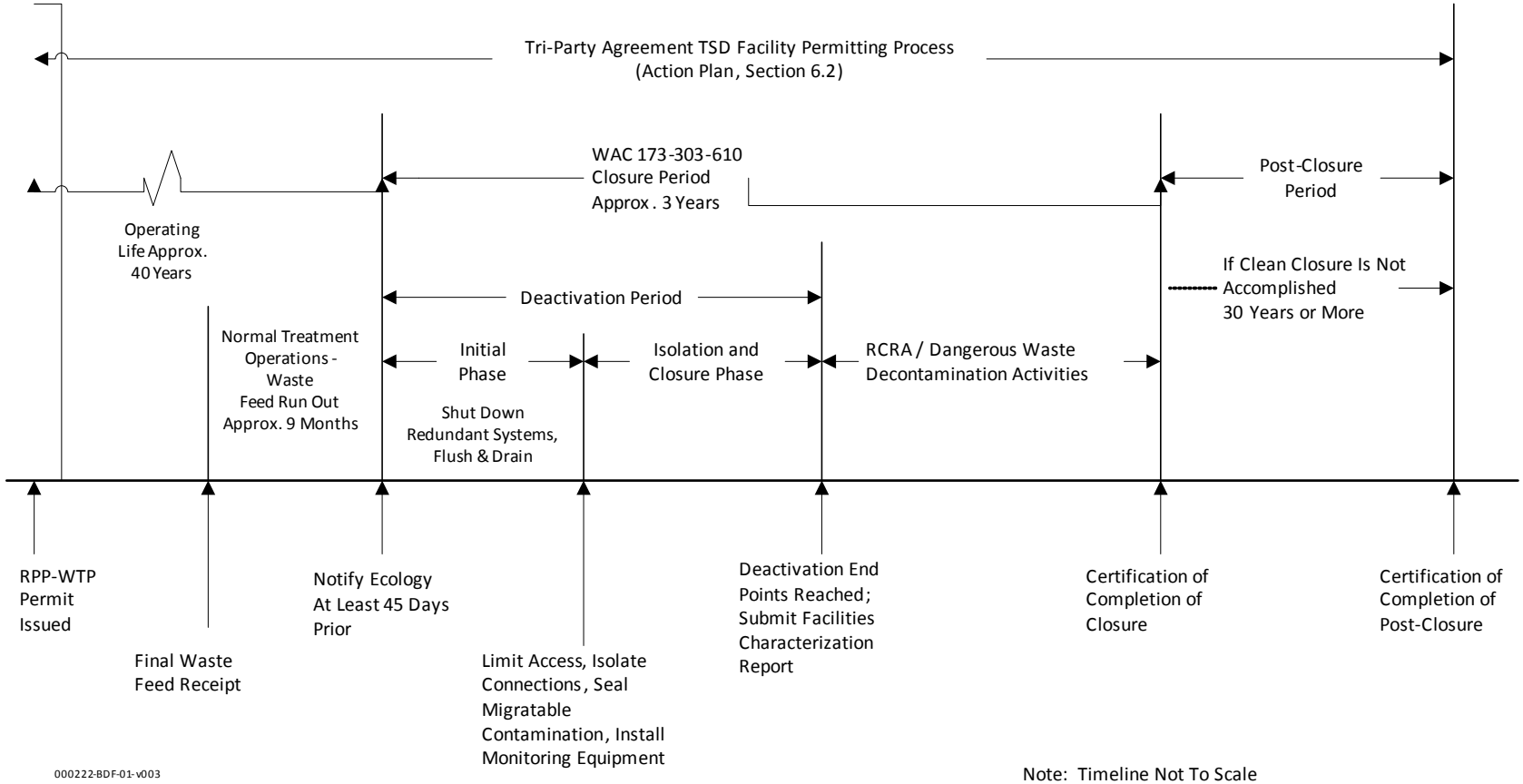

Figure ~~H-7~~11-7 Closure Schedule for WTP

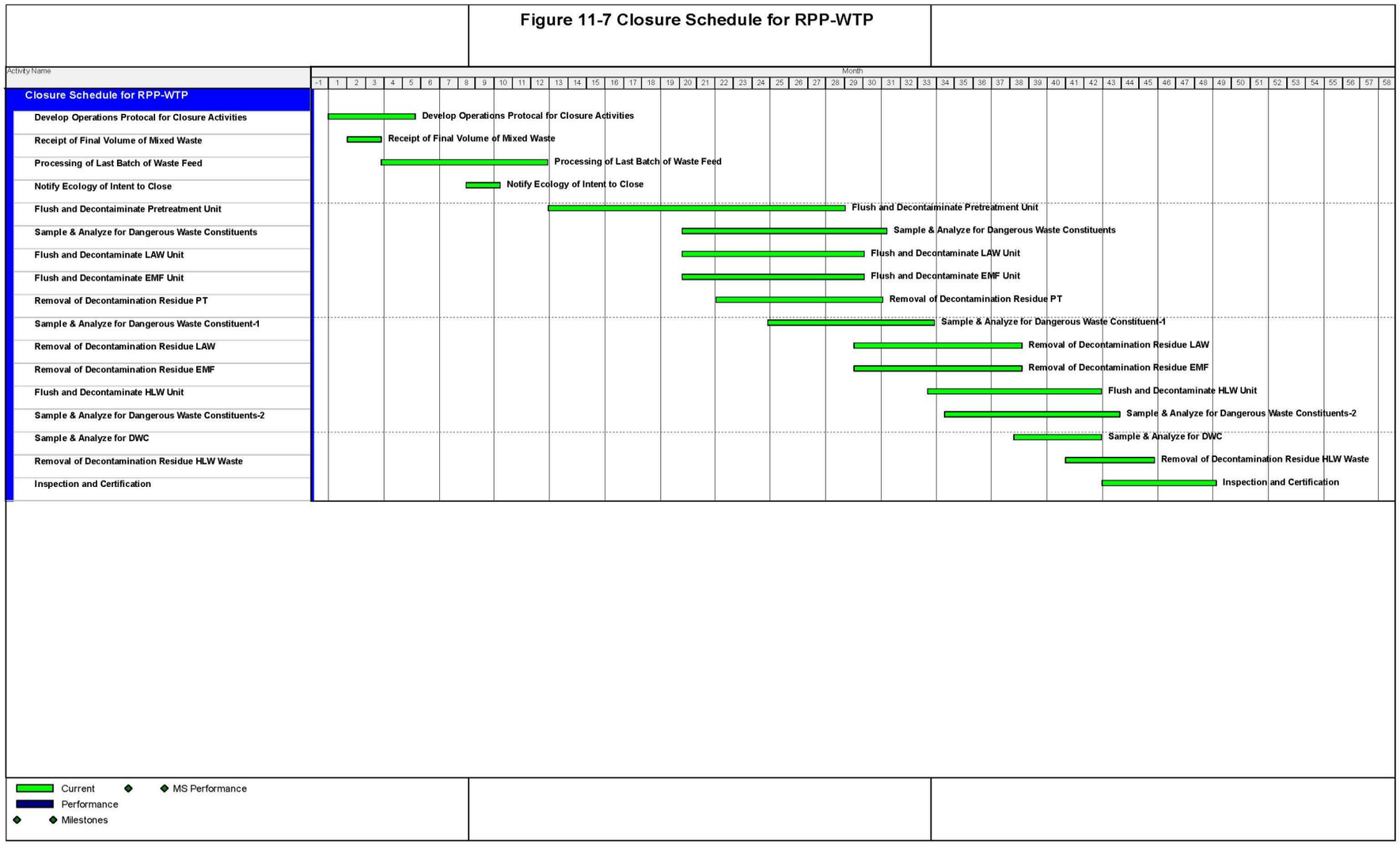

This page intentionally left blank.

R11776033

ISSUED BY
RPP-WTP-PDC

Document title: **Secondary Containment Design**

Contract number: DE-AC27-01RV14136

Department: CSA

Author(s): Janine Smith Dan Robertson

Originator
By Janine Smith
Org Name BNI WTP
Placed Mar 29 2016 3:52 pm

APPROVED
By Daniel C. Robertson at 6:57 am, Mar 30, 2016

Principal author signature:

Document number: 24590-WTP-PER-CSA-02-001, Rev 11

Checked by: David Taylor

Checked
By David Taylor
Org Name CSA
Placed Mar 30 2016 6:39 am

Checker signature:

Reviewed by: Tim Kelly

Reviewer signature:

Date of issue: 5-3-16

Issue status: Approved

Approved by: Luis Moreschi

Approver's position: CSA/EMF, Engineering Group Supervisor

Approver signature:

River Protection Project
Waste Treatment Plant
2435 Stevens Center Place
Richland, WA 99354
United States of America
Tel: 509 371 2000

Notice

Please note that source, special nuclear, and byproduct materials, as defined in the Atomic Energy Act of 1954 (AEA), are regulated at the US Department of Energy (DOE) facilities exclusively by DOE acting pursuant to its AEA authority. DOE asserts, that pursuant to the AEA, it has sole and exclusive responsibility and authority to regulate source, special nuclear, and byproduct materials at DOE-owned nuclear facilities. Information contained herein on radionuclides is provided for process description purposes only.

History Sheet

Rev	Date	Reason for revision	Revised by
0	6/24/02	Initial issue	Indra Ghosh
1	9/26/02	Issued for Permitting Use	Indra Ghosh / N. T. Desai
2	10/09/02	• Revised text in Section 1 • Added Yard Transfer Lines structural support description. • Changed material type from 304L to 316L on Fig. 4. • Added Reference to "LAB" building in all sections	Indra Ghosh / N. T. Desai
3	3/27/03	• Revised Figures 1,2,3 and 4, and deleted Figure 5 • Replaced Ref. 2.1.5 with Washington Administrative Code • Editorial changes in Section 3.1 as marked. Issued for Permitting Use	Indra Ghosh / N. T. Desai
4	2/12/04	• Addition of AEA Statement • Editorial changes in Section 3.2 as marked. • Revise Figure 1 to reflect changes to LAW vessel skirt • Deleted reference to the Lab in Figure 3 • Addition of Figure 5 describing the typical Laboratory vessel support details • Addition of Figures 6 and 7 providing typical Laboratory under sink and fume hood drain secondary containment drip pan details • Addition of Figure 8 describing typical Laboratory piping and pump pit sump weir details	Harsh Raval
5	8/4/04	Issued for Permitting Use	H. Raval, D. Robertson
6	8/25/04	Issued for Permitting Use	H. Raval, D. Robertson

Rev	Date	Reason for revision	Revised by
7	5/19/05	• Revised Section 3.1, Seismic Peak Ground Acceleration. Nathan Kyle • Corrected specification callout on Figure 1 • Revised typical PT sump and typical wall/mat penetration details on Figure 4 • Revised Note 3 and revised details on Figure 7 • General revision to Figure 8 (Added Details 1 and 2) • Revised Notes 3 and 4 for cupsink detail, and revised hot cell transfer port drain details on Figure 9. Added Note 5 for cupsink cover. • Revised Note 3, added Note 4 to embed plate detail on Figure 10. Added adjacent embed plate optional detail. • Added Figures 11 and 12. Issued for Permitting Use	Nathan Kyle
8	8/25/08	• Revised Figures 8 and 11 to provide additional sketch notes for Laboratory weir plans and sections • Addition of Figure 13 LAW Melter Encasement Assembly sketch Issued for Permitting Use	Bryson Bogart
9	2/8/10	• Added Figures 14 through 16, revised Figure 13 Issued for Permitting Use	Bryson Bogart, Dan Robertson
10	10/18/11	• Revised Figure 6 and 7, revised figure title blocks Issued for Permitting Use	Bryson Bogart, Dan Robertson
11	2/16/16	• Added Figures 17 through 22 • Revised sections 1 and 3 to include EMF related content Issued for Permitting Use	Janine Smith, Dan Robertson

Contents

Notice ii
History Sheet ii
1 Introduction 1
2 Applicable Documents 1
2.1 Codes and Standards 1
3 Description 2
3.1 Design Methodology, Material, Loads, and Load Combinations 2
3.2 Typical Details 3

Figures

Figure 1 Typical Vessel Embed, Support, and Flat Bottom Tank Details for LAW 3 Building 4
Figure 2 Liner Plate and Grillage Support Details for PT, HLW, LAW and LAB Buildings 5
Figure 3 Typical Process Vessel Support Details for PT and HLW Buildings 6
Figure 4 Misc. Typical Details Sumps, Trenches, Wall Penetrations, Embedded Plates and Special Protective Coating PT, HLW, LAW and LAB Buildings 7
Figure 5 Typical Process Vessel Support Details for LAB Building 8
Figure 6 Plan View of Typical Under Sink and Fume Hood Drain for LAB Bldg Secondary Containment Leak Collection Pan 9
Figure 7 Section View of Typical Laboratory Under Sink and Fume Hood Drain for LAB Bldg Secondary Containment Leak Collection Pan, Including Leak Test Plug 10
Figure 8 Typical Laboratory Piping and Pump Pit Sump and Weir Details for LAB Building 11
Figure 9 Typical Hot Cell Floor Drain Detail and Transfer Port Drain Detail for LAB Building 12
Figure 10 Typical HLW Building Sump Details & Typical PT Building SS Liner/CS Embed Detail 13
Figure 11 Typical Laboratory C3 Piping and Pump Pit Sump and Weir Details for LAB Building 14
Figure 12 Typical RLD Condensate Tank Support Details for PT Building (Exterior) 15
Figure 13 LAW Melter Encasement Assembly Secondary Containment Details 16
Figure 14 Typical Autosampling System ASX Sampler Full Half Section 17

Figure 15 Typical Autosampling System Lower Containment Area Leak Detection Details 18
Figure 16 HLW Building HOP Drum Transfer Tunnel Drip Pan Plan, Sections and Details 19
Figure 17 Typical Details; Waterstops; EMF Buildings 20
Figure 18 Typical Details; Liner Plate and Grillage Support Details; EMF Buildings 21
Figure 19 Typical Details; Equipment Support and Ring Beam; EMF Buildings 22
Figure 20 Typical Details; Sumps; EMF Buildings 23
Figure 21 Typical Details; Wall Penetrations; EMF Buildings 24
Figure 22 Typical Details; Embed Plate, Stanchion Support, Subchange Room Interface; EMF Buildings 25

1 Introduction

In accordance with Chapter 173-303 Washington Administrative Code (Ref. 2.1.5), facilities that manage liquid dangerous waste must provide secondary containment[1]. At the Waste Treatment and Immobilization Plant, secondary containment systems have been designed to prevent a release of dangerous waste to the environment as required by the Code.

This report describes and provides references to the design criteria, load definitions, load combinations, material of construction, and methodology for the analysis/design of Pretreatment (PT), High-Level Waste (HLW), Low-Activity Waste (LAW) facilities, Effluent Management Facility (EMF), and Analytical Laboratory (LAB) building with emphasis on secondary containment components. It also includes several representative typical details.

2 Applicable Documents

2.1 Codes and Standards

2.1.1 ACI 349, Code Requirements for Nuclear Safety-Related Concrete Structures.

2.1.2 ACI 318, Code Requirements for Structural Concrete.

2.1.3 Uniform Building Code (UBC), 1997.

2.1.4 ANSI/AISC N690, Specification for the Design, Fabrication, and Erection of Steel Safety-Related Structures for Nuclear Facilities.

2.1.5 Washington Administrative Code, Chapter 173-303.

2.1.6 AISC M016-89, Manual of Steel Construction -Allowable Stress Design, Ninth Edition.

2.1.7 ASCE 7, Minimum Design Loads for Buildings and Other Structures.

2.1.8 ASCE 4, Seismic Analysis of Safety-Related Nuclear Structures and Commentary.

2.1.9 Safety Requirements Document, Volume II, 24590-WTP-SRD-ESH-01-001-02.

[1] With the exception of ancillary equipment as provided by 173-303-640(4)(f) and approved by DWP.

3 Description

3.1 Design Methodology, Material, Loads, and Load Combinations

Methodology	Codes and specifications: • PT and HLW: General: ASCE 4 (Ref. 2.1.8). Concrete: ACI 349 (Ref. 2.1.1). Steel: ANSI/AISC N690 (Ref. 2.1.4) and AISC (Ref. 2.1.6). • LAW, LAB and EMF: General: UBC (Ref. 2.1.3). Concrete: ACI 318 (Ref. 2.1.2). Steel: AISC M016 (Ref. 2.1.6).
Dead Loads and Live loads:	ASCE 7 (Ref. 2.1.7), UBC (Ref. 2.1.3), and Tables 4-1, 4-2 and 4-3 of SRD (Ref. 2.1.9).
Seismic Loads	Site-specific response spectra as specified in SRD (Ref. 2.1.9). • PT and HLW: Peak Ground Horizontal Acceleration = 0.30g. Peak Ground Vertical Acceleration = 0.21g. • LAW, LAB and EMF: Seismic Zone 2B (UBC, Ref. 2.1.3). Peak Ground Horizontal Acceleration = 0.24g. (Zero Period Acceleration) Peak Ground Vertical Acceleration = 0.16g. (Zero Period Acceleration)
Material	
Concrete	28-day compressive strength, f,' = 4,000 psi and 5,000 psi.
Reinforcing Bar	ASTM A706, deformed.
Steel	W Shape – ASTM A992 or A572 Grade 50; Angles and Channels - ASTM A36 or A529 Grade 50; Plates - ASTM A36; Pipe - ASTM A53; Anchor Rods - ASTM F1554; Welded studs A108; Steel deck-ASTM A653.
Load Combinations	
Concrete	• HLW and PT: Based on ACI 349 (Ref 2.1.1). • LAW, LAB and EMF: ACI 318 (Ref. 2.1.2) and UBC (Ref 2.1.3).
Steel	• HLW and PT: Based on ANSI/AISC N690 (Ref 2.1.4) and AISC (Ref 2.1.6). • LAW, LAB and EMF: AISC M016-89 (Ref. 2.1.6) and UBC (Ref 2.1.3).
Stainless Steel Liners (SS)	Most commonly used in the process cells. Refer to Figures 2-5 for typical details concerning PT, HLW, LAW & LAB and Figures 18 & 20 for EMF buildings. Refer to Figures 14 and 15 for ASX liner typical details.
Special Protective Coating	Material for coatings will be compatible with the dangerous waste.
Yard Transfer Lines Structural Support	Structural support for yard transfer lines (intra and inter facility waste transfer lines) is described in Ancillary Equipment Pipe Support Design, 24590-WTP-PER-PS-02-001.

3.2 Typical Details

Figures 1 through 22 show several typical details related to secondary containment for PT, HLW, LAW, LAB and EMF buildings.

Figure 1 Typical Vessel Embed, Support, and Flat Bottom Tank Details for LAW 3 Building

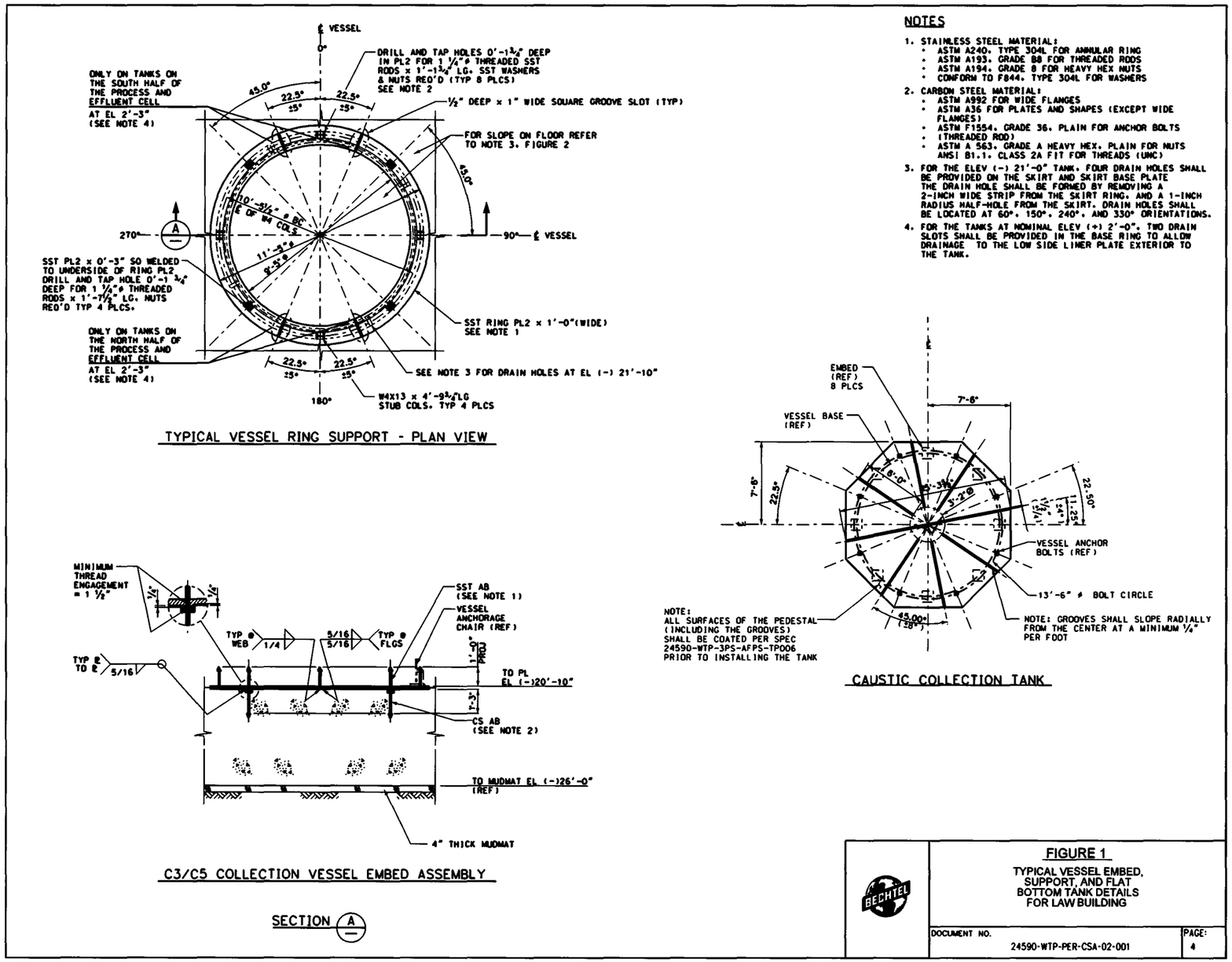

TYPICAL VESSEL RING SUPPORT - PLAN VIEW

C3/C5 COLLECTION VESSEL EMBED ASSEMBLY

SECTION A

NOTES

1. STAINLESS STEEL MATERIAL:
   - ASTM A240, TYPE 304L FOR ANNULAR RING
   - ASTM A193, GRADE B8 FOR THREADED RODS
   - ASTM A194, GRADE 8 FOR HEAVY HEX NUTS
   - CONFORM TO F844, TYPE 304L FOR WASHERS
2. CARBON STEEL MATERIAL:
   - ASTM A992 FOR WIDE FLANGES
   - ASTM A36 FOR PLATES AND SHAPES (EXCEPT WIDE FLANGES)
   - ASTM F1554, GRADE 36, PLAIN FOR ANCHOR BOLTS
   - (THREADED ROD)
   - ASTM A 563, GRADE A HEAVY HEX, PLAIN FOR NUTS
   - ANSI B1.1, CLASS 2A FIT FOR THREADS (UNC)
3. FOR THE ELEV (-) 21'-0" TANK, FOUR DRAIN HOLES SHALL BE PROVIDED ON THE SKIRT AND SKIRT BASE PLATE THE DRAIN HOLE SHALL BE FORMED BY REMOVING A 2-INCH WIDE STRIP FROM THE SKIRT RING, AND A 1-INCH RADIUS HALF-HOLE FROM THE SKIRT. DRAIN HOLES SHALL BE LOCATED AT 60°, 150°, 240°, AND 330° ORIENTATIONS.
4. FOR THE TANKS AT NOMINAL ELEV (+) 2'-0", TWO DRAIN SLOTS SHALL BE PROVIDED IN THE BASE RING TO ALLOW DRAINAGE TO THE LOW SIDE LINER PLATE EXTERIOR TO THE TANK.

CAUSTIC COLLECTION TANK

BECHTEL

FIGURE 1
TYPICAL VESSEL EMBED, SUPPORT, AND FLAT BOTTOM TANK DETAILS FOR LAW BUILDING

DOCUMENT NO. 24590-WTP-PER-CSA-02-001 | PAGE: 4

Figure 2 Liner Plate and Grillage Support Details for PT, HLW, LAW and LAB Buildings

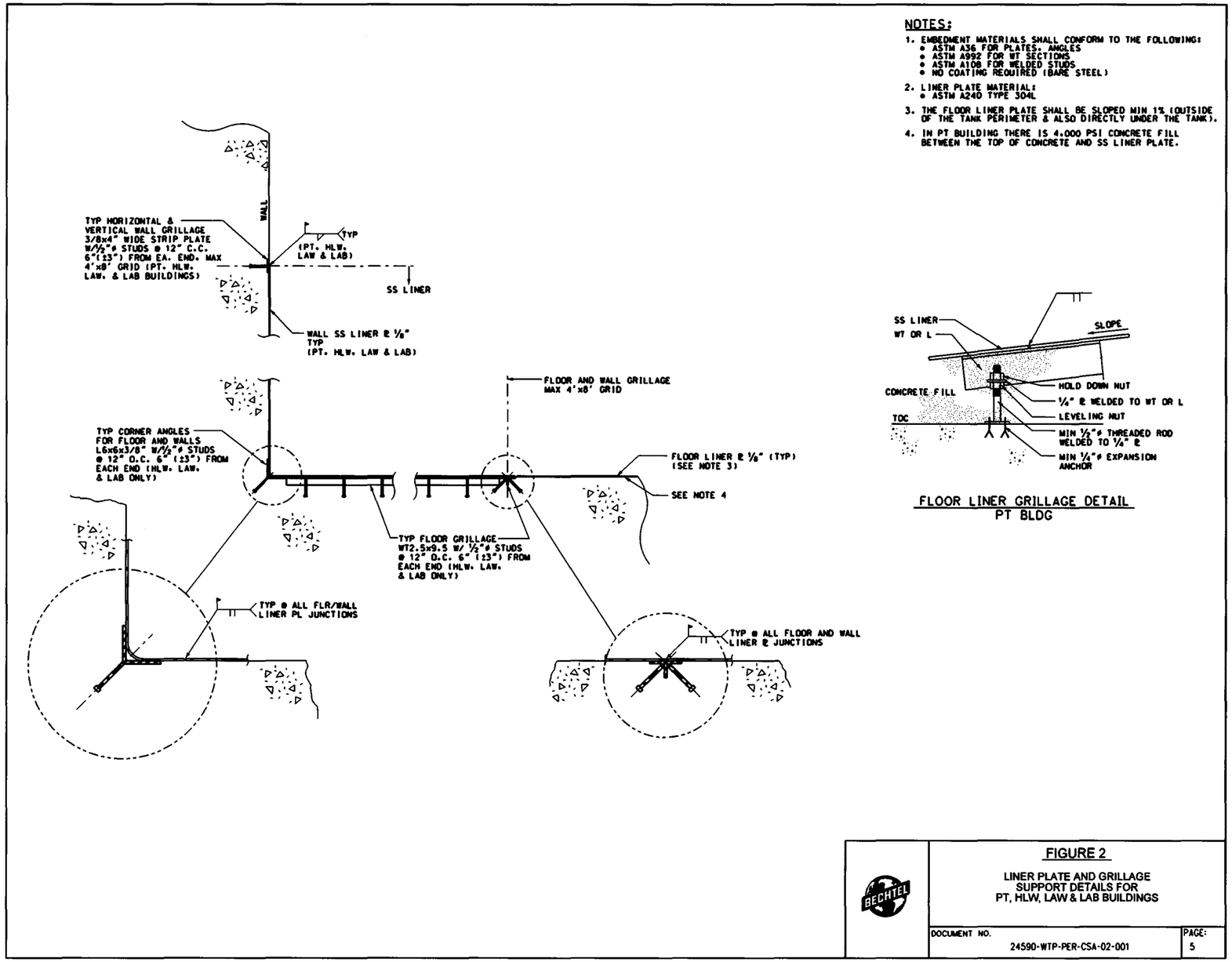

Figure 3 Typical Process Vessel Support Details for PT and HLW Buildings

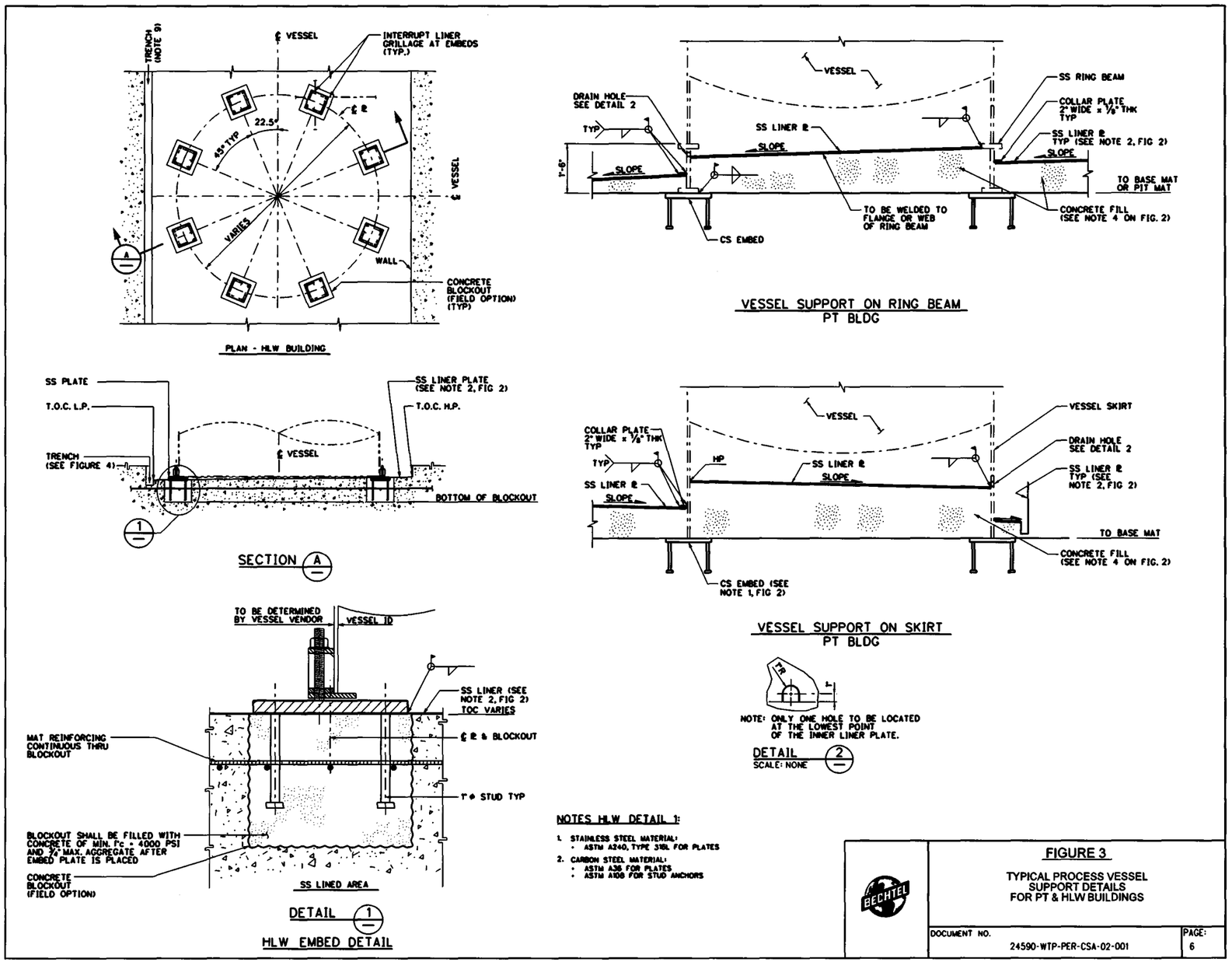

Figure 4 **Misc. Typical Details Sumps, Trenches, Wall Penetrations, Embedded Plates and Special Protective Coating PT, HLW, LAW and LAB Buildings**

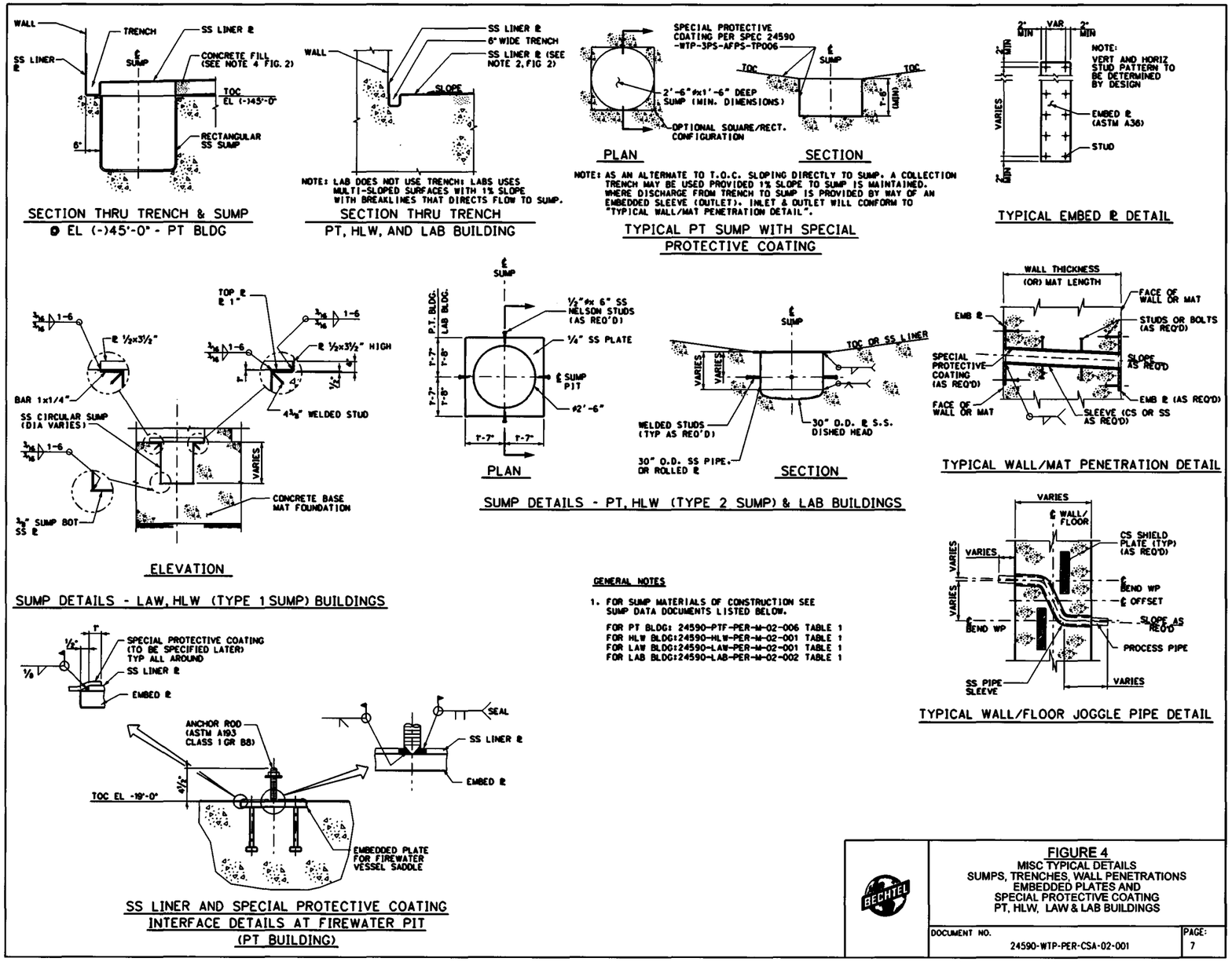

Figure 5 Typical Process Vessel Support Details for LAB Building

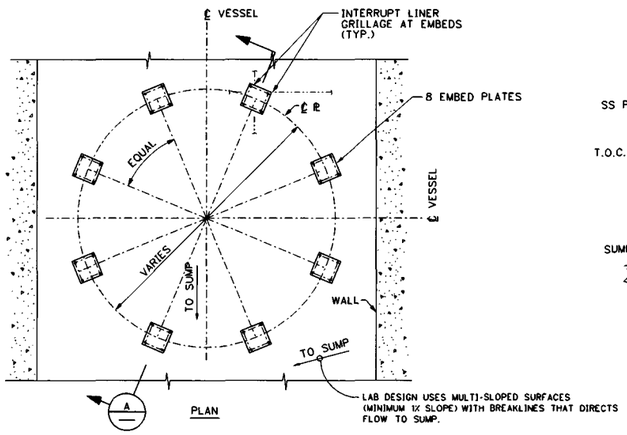

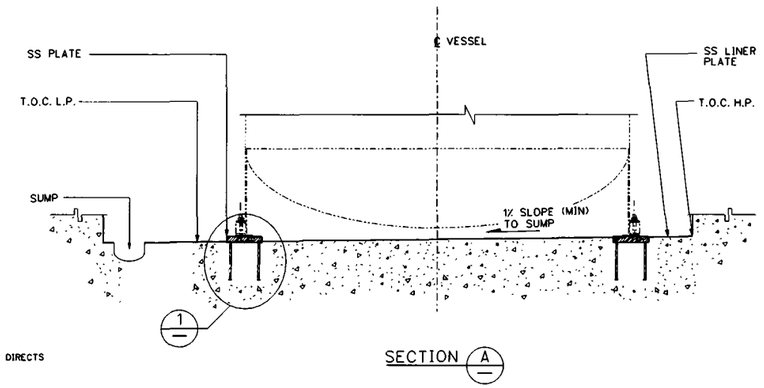

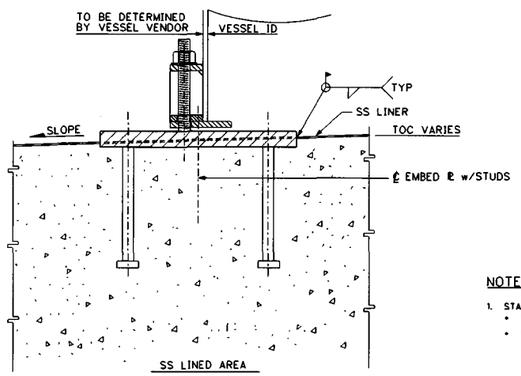

DETAIL 1

NOTES:

1. STAINLESS STEEL MATERIAL:
   - ASTM A240, TYPE 304L FOR PLATES
   - ASTM A108 GRADE C1010 THRU C1020 FOR STUD ANCHORS

FIGURE 5

TYPICAL PROCESS VESSEL SUPPORT DETAILS FOR LAB BUILDING

DOCUMENT NO. 24590-WTP-PER-CSA-02-001 | PAGE: 8

Figure 6 Plan View of Typical Under Sink and Fume Hood Drain for LAB Bldg Secondary Containment Leak Collection Pan

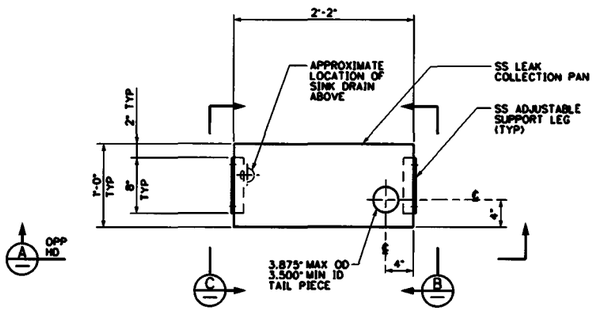

PLAN VIEW

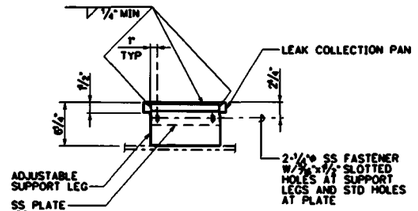

SECTION B

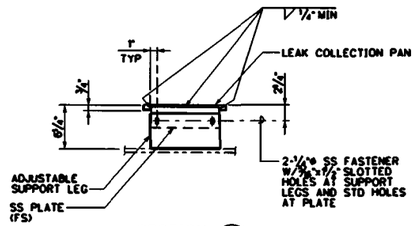

SECTION C

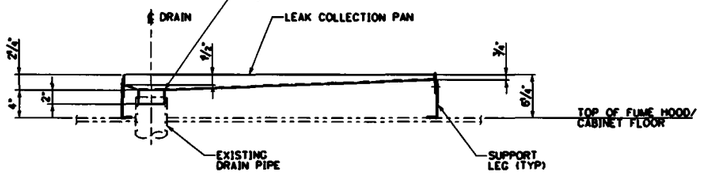

SECTION A

NOTES:

1. STAINLESS STEEL MATERIALS SHALL BE TYPE 304L 18 GA MINIMUM PER ASTM A240, R 2009 OR LATER REVISION.
2. ALL WELDING SHALL BE PERFORMED IN ACCORDANCE WITH AWS D9.1.
3. WELD NDE TESTING 100% LIQUID PENETRANT TEST (PT) OR 100% HYDRAULIC TEST UNDER ATMOSPHERIC PRESSURE
4. DRIP PAN DIMENSIONS ARE TYPICAL AND CAN VARY BASED ON FUME HOOD PIPING CONFIGURATION AND BASE CABINET DIMENSIONS.
5. LEAK COLLECTION PANS SHALL BE FABRICATED TO BE WATER TIGHT.

BECHTEL

FIGURE 6

TYPICAL UNDER SINK
AND FUME HOOD DRAIN FOR LAB BLDG
SECONDARY CONTAINMENT LEAK COLLECTION PAN

DOCUMENT NO.	PAGE:
24590-WTP-PER-CSA-02-001	9

Figure 7 **Section View of Typical Laboratory Under Sink and Fume Hood Drain for LAB Bldg Secondary Containment Leak Collection Pan, Including Leak Test Plug**

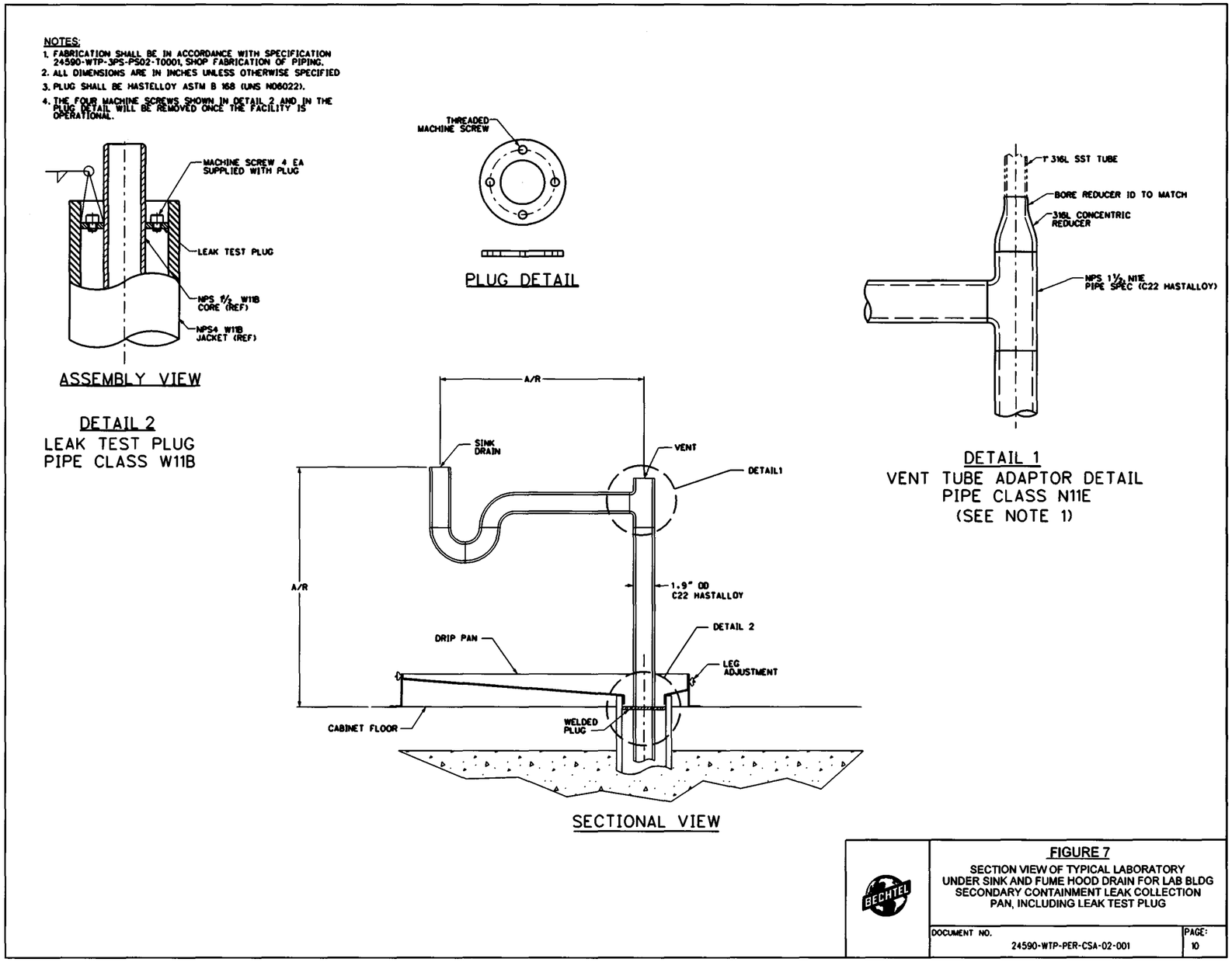

Figure 8 Typical Laboratory Piping and Pump Pit Sump and Weir Details for LAB Building

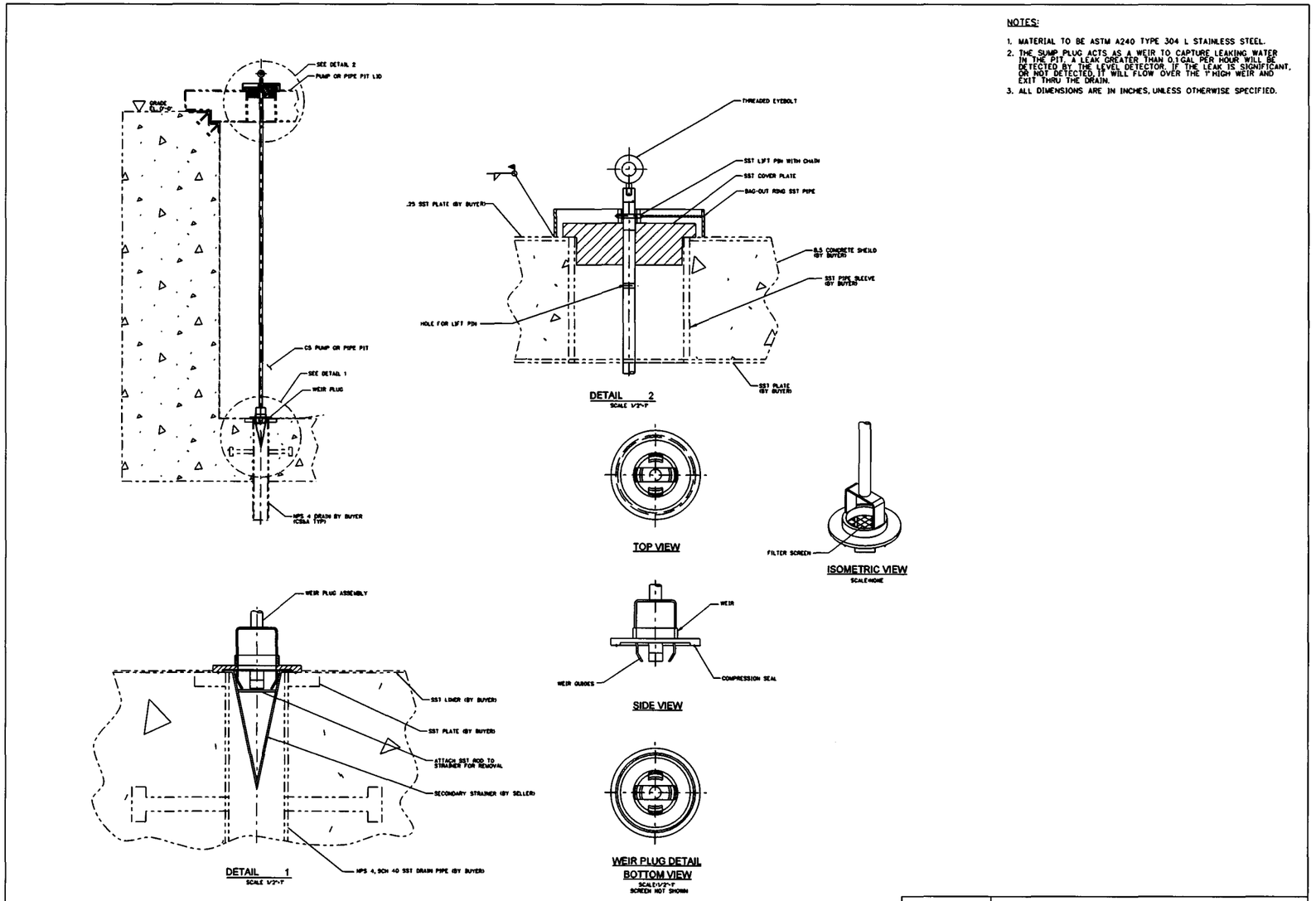

Figure 9 Typical Hot Cell Floor Drain Detail and Transfer Port Drain Detail for LAB Building

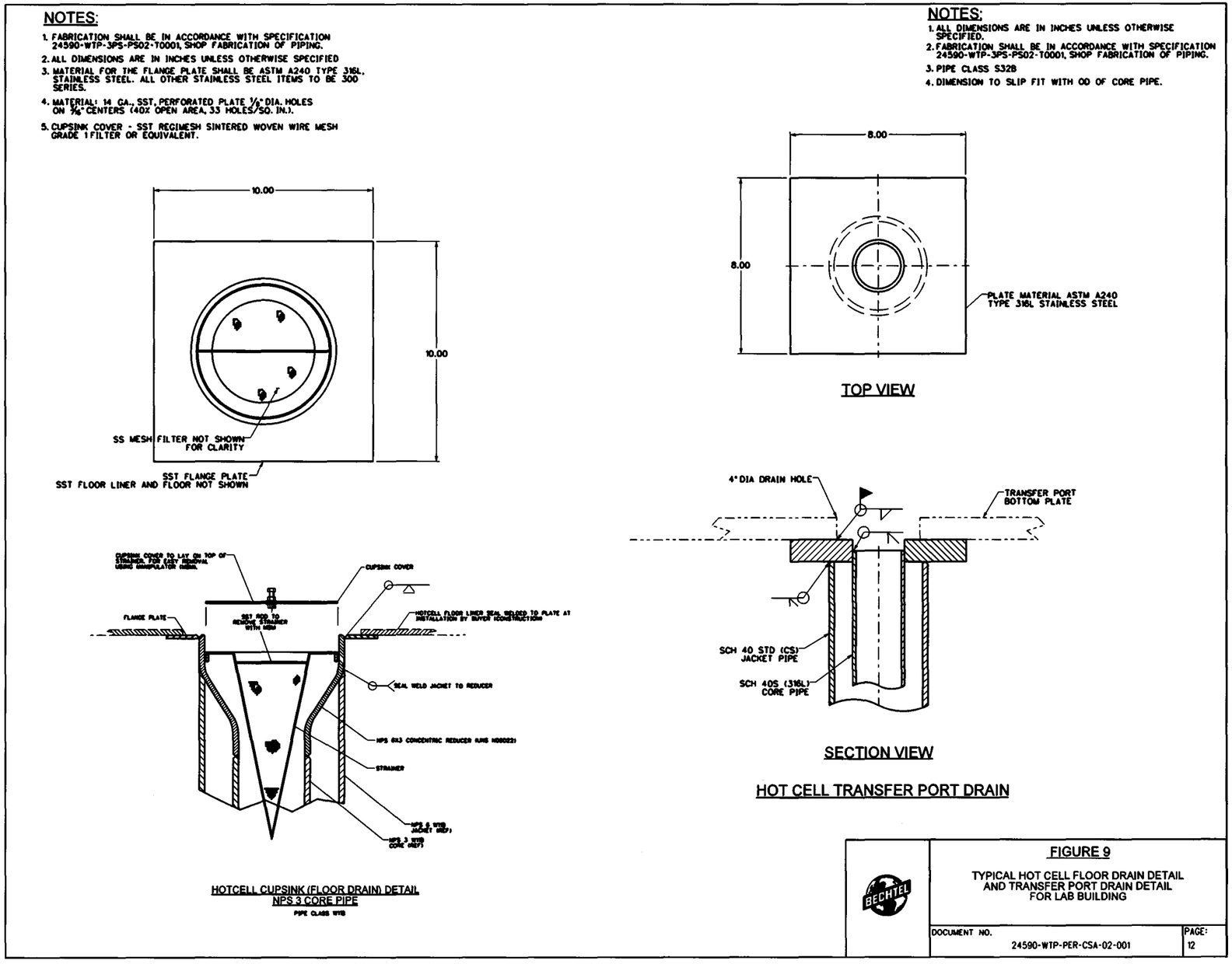

Figure 10 Typical HLW Building Sump Details & Typical PT Building SS Liner/CS Embed Detail

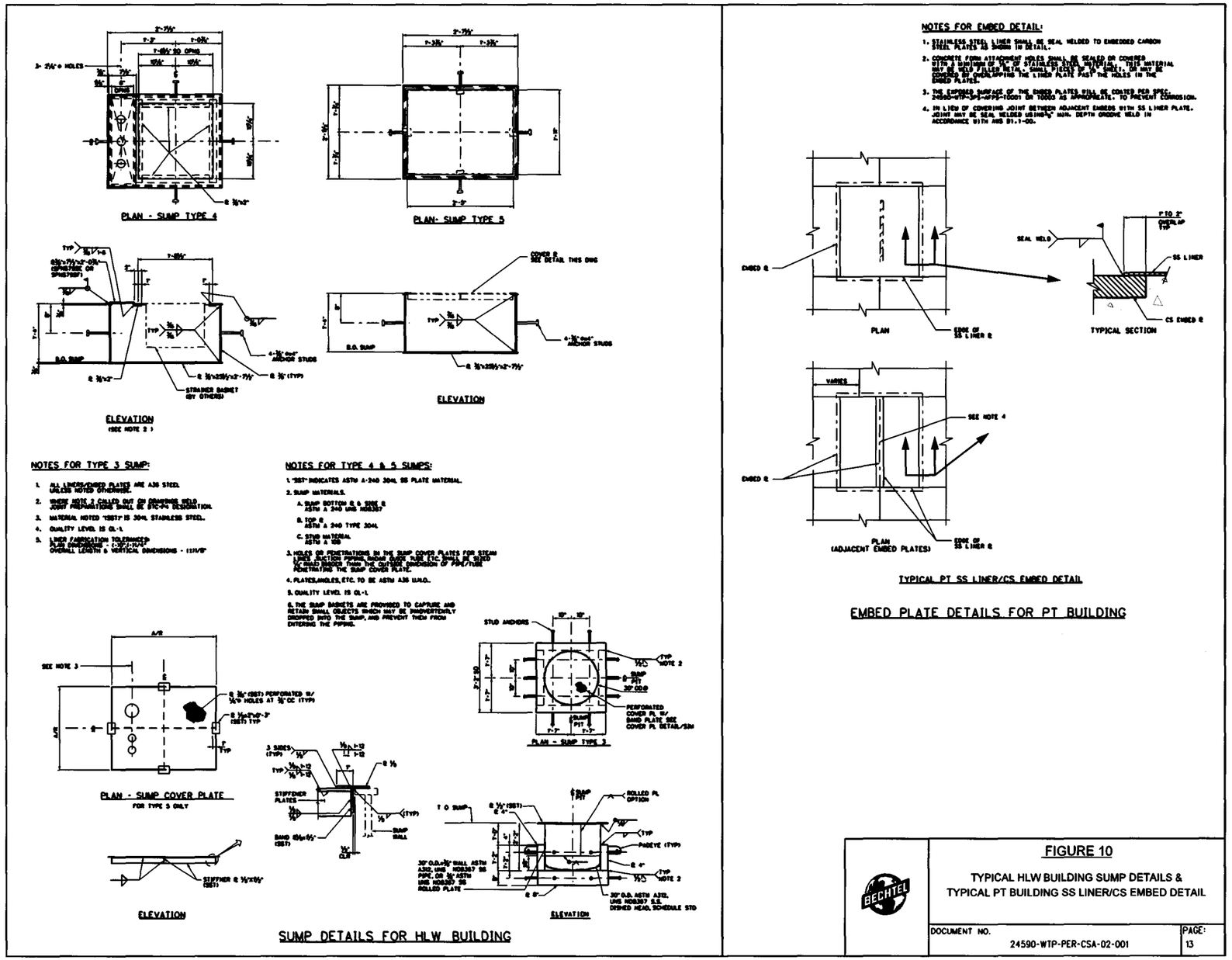

FIGURE 10

TYPICAL HLW BUILDING SUMP DETAILS &
TYPICAL PT BUILDING SS LINER/CS EMBED DETAIL

DOCUMENT NO.	PAGE:
24590-WTP-PER-CSA-02-001	13

Figure 11 Typical Laboratory C3 Piping and Pump Pit Sump and Weir Details for LAB Building

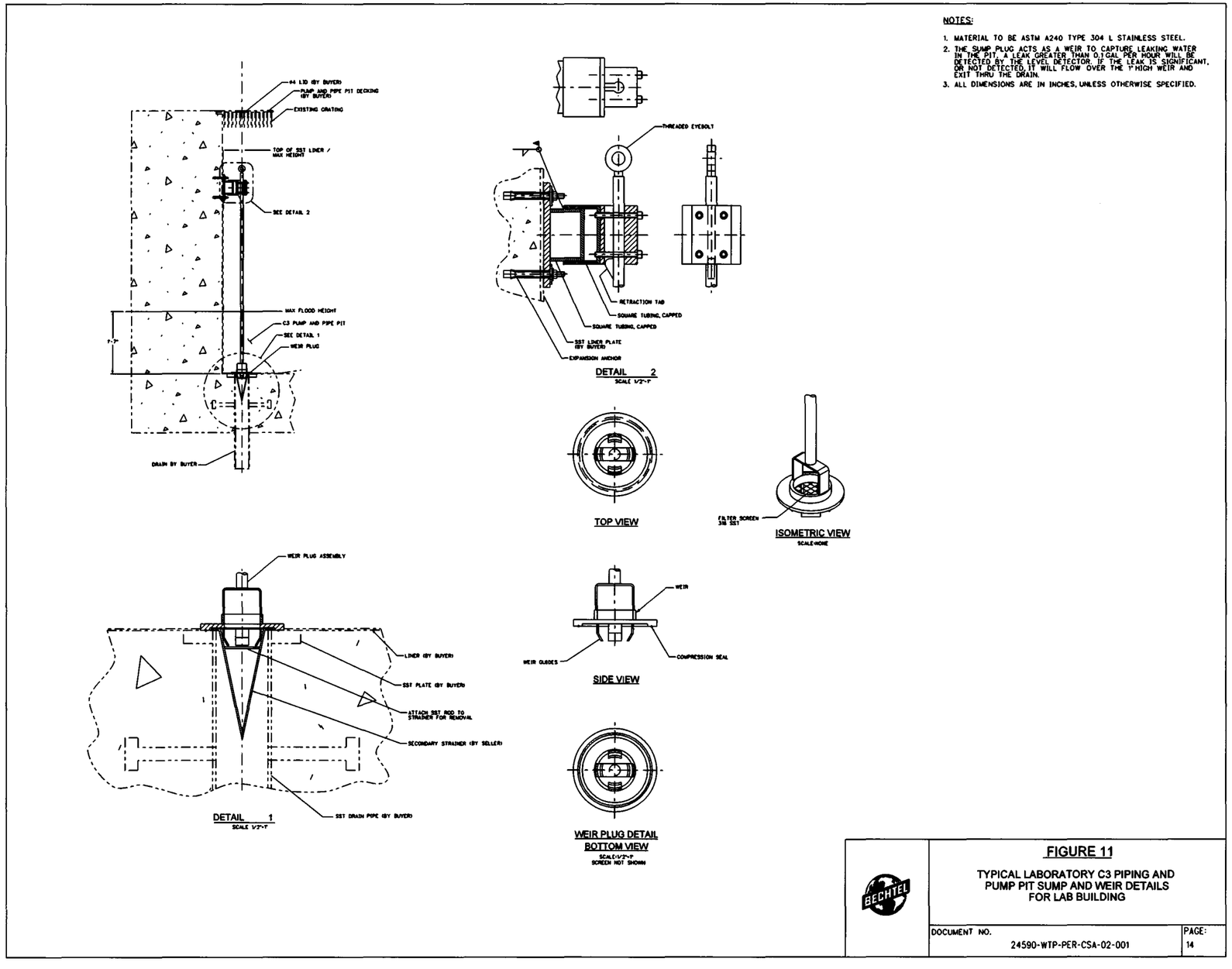

Figure 12 Typical RLD Condensate Tank Support Details for PT Building (Exterior)

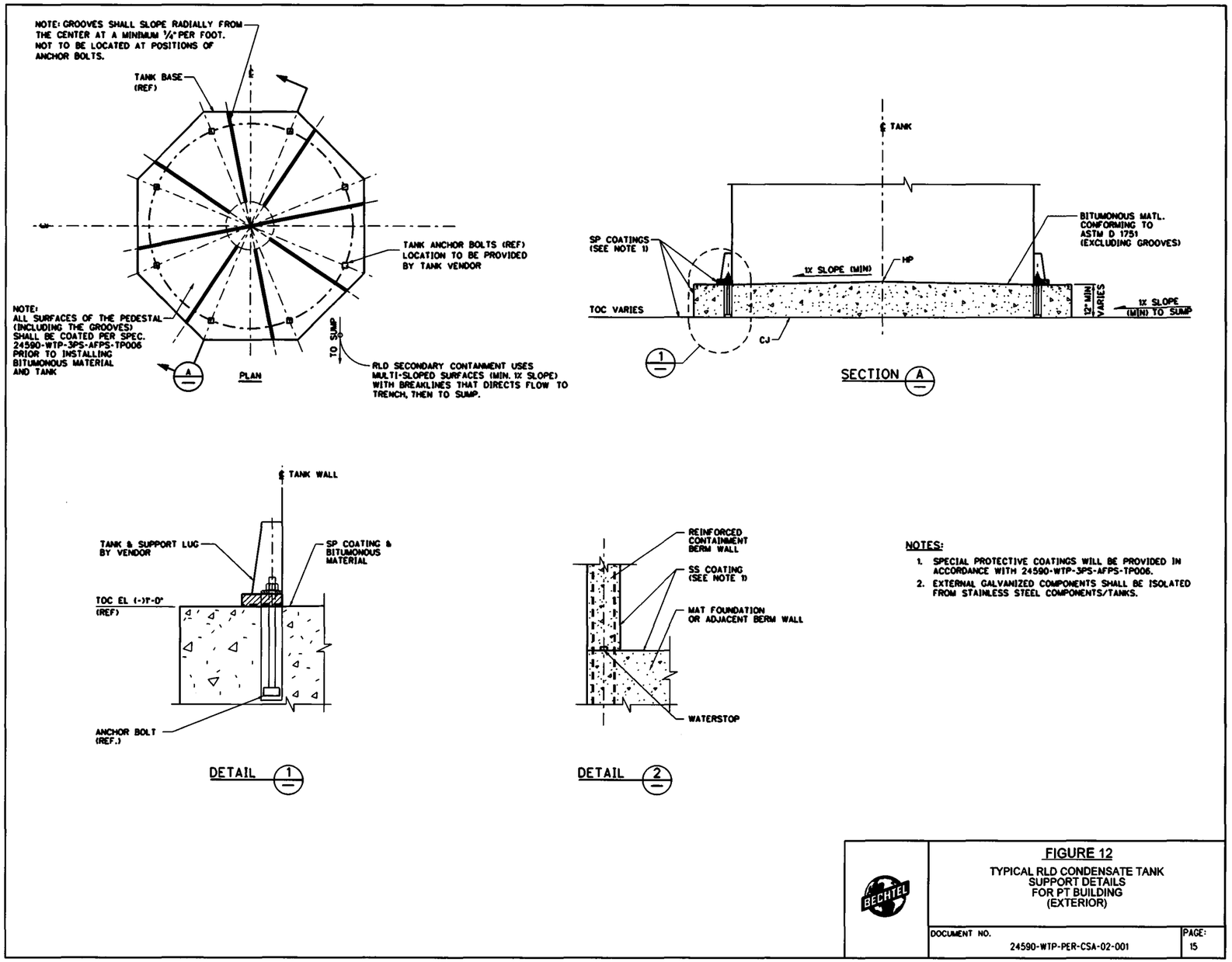

Figure 13 LAW Melter Encasement Assembly Secondary Containment Details

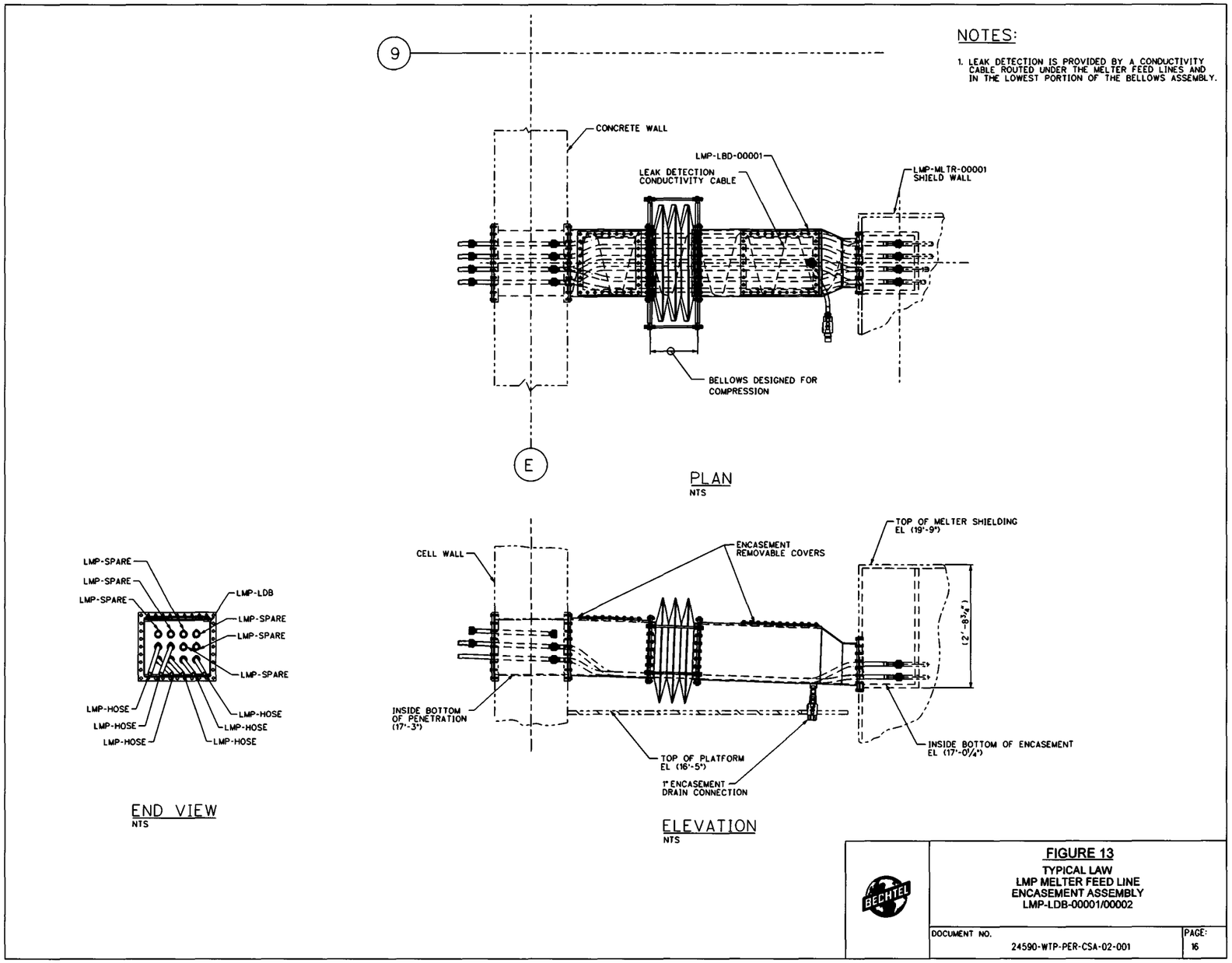

Figure 14 Typical Autosampling System ASX Sampler Full Half Section

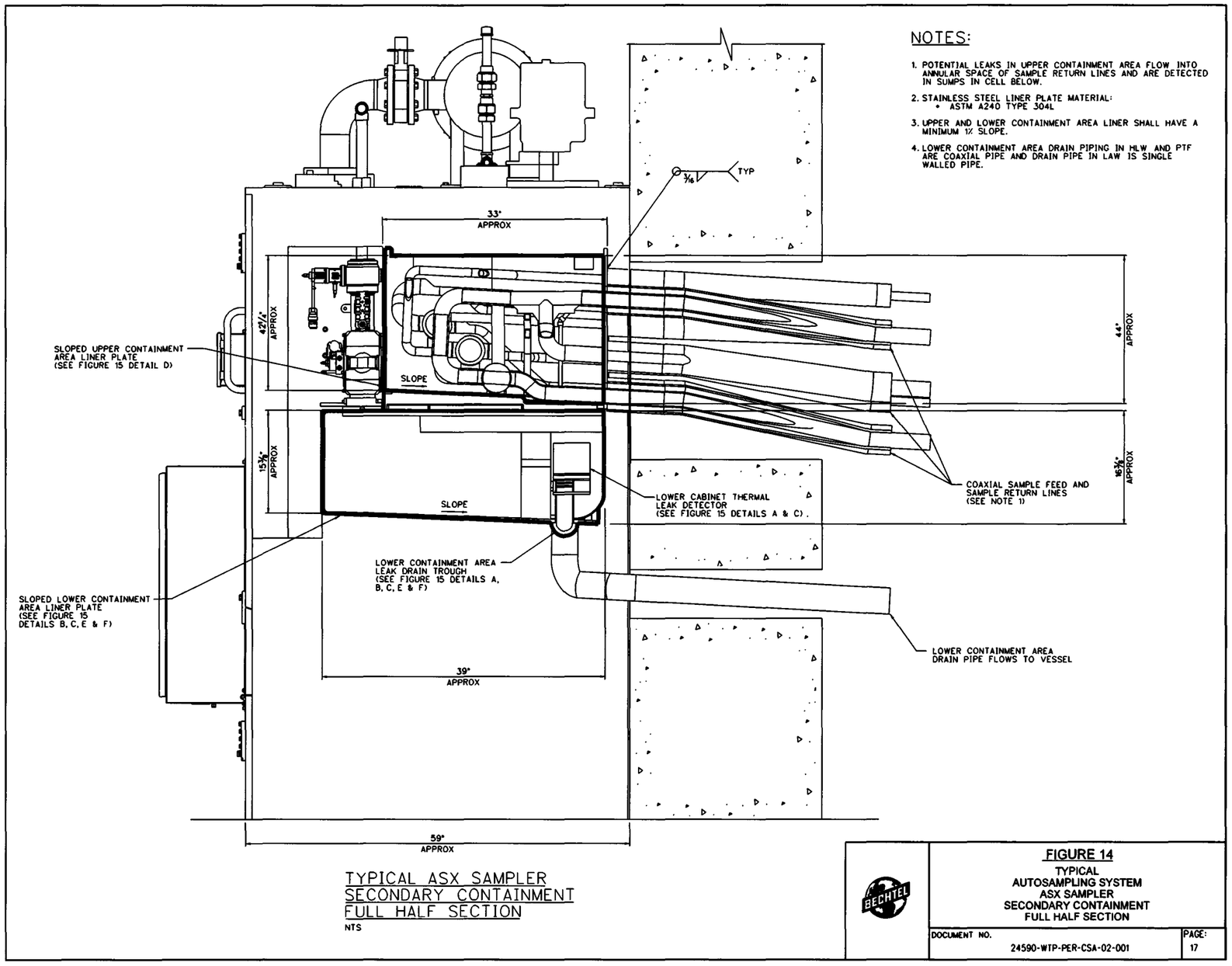

Figure 15 Typical Autosampling System Lower Containment Area Leak Detection Details

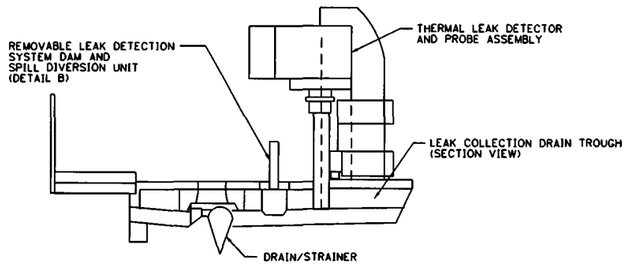

DETAIL A
SECTION VIEW OF DETAIL C
NTS

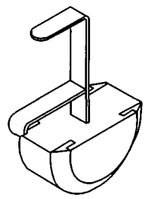

DETAIL B
ISOMETRIC VIEW
REMOVABLE LEAK DETECTION
SYSTEM DAM (WEIR)
NTS

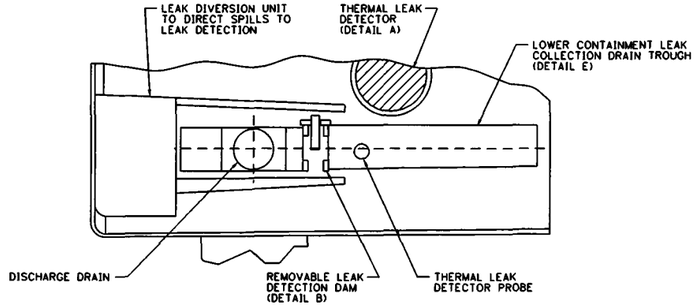

DETAIL C
PLAN VIEW OF DETAIL A
LOWER CONTAINMENT AREA
AND LEAK DIVERSION UNIT
NTS

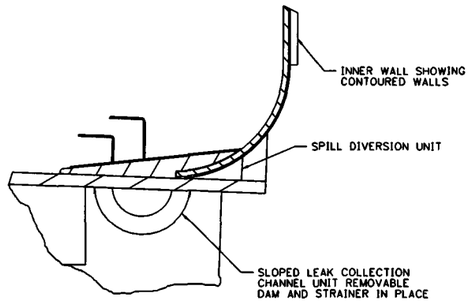

DETAIL F
SECTION VIEW
NTS

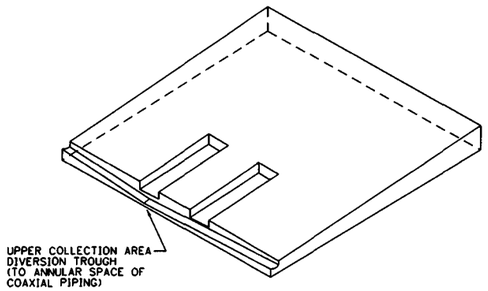

DETAIL D
ISOMETRIC VIEW
UPPER CONTAINMENT AREA
LINER PLATE
NTS

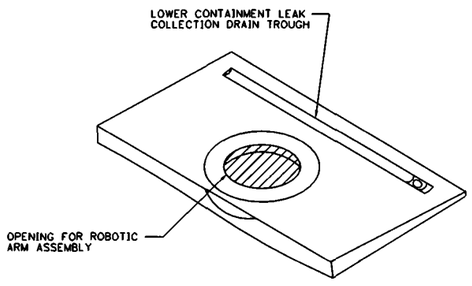

DETAIL E
ISOMETRIC VIEW
LOWER CONTAINMENT AREA
LINER PLATE
NTS

FIGURE 15
TYPICAL AUTOSAMPLING SYSTEM CONTAINMENT AREA AND LEAK DETECTION DETAILS

DOCUMENT NO. 24590-WTP-PER-CSA-02-001 | PAGE: 18

Figure 16 HLW Building HOP Drum Transfer Tunnel Drip Pan Plan, Sections and Details

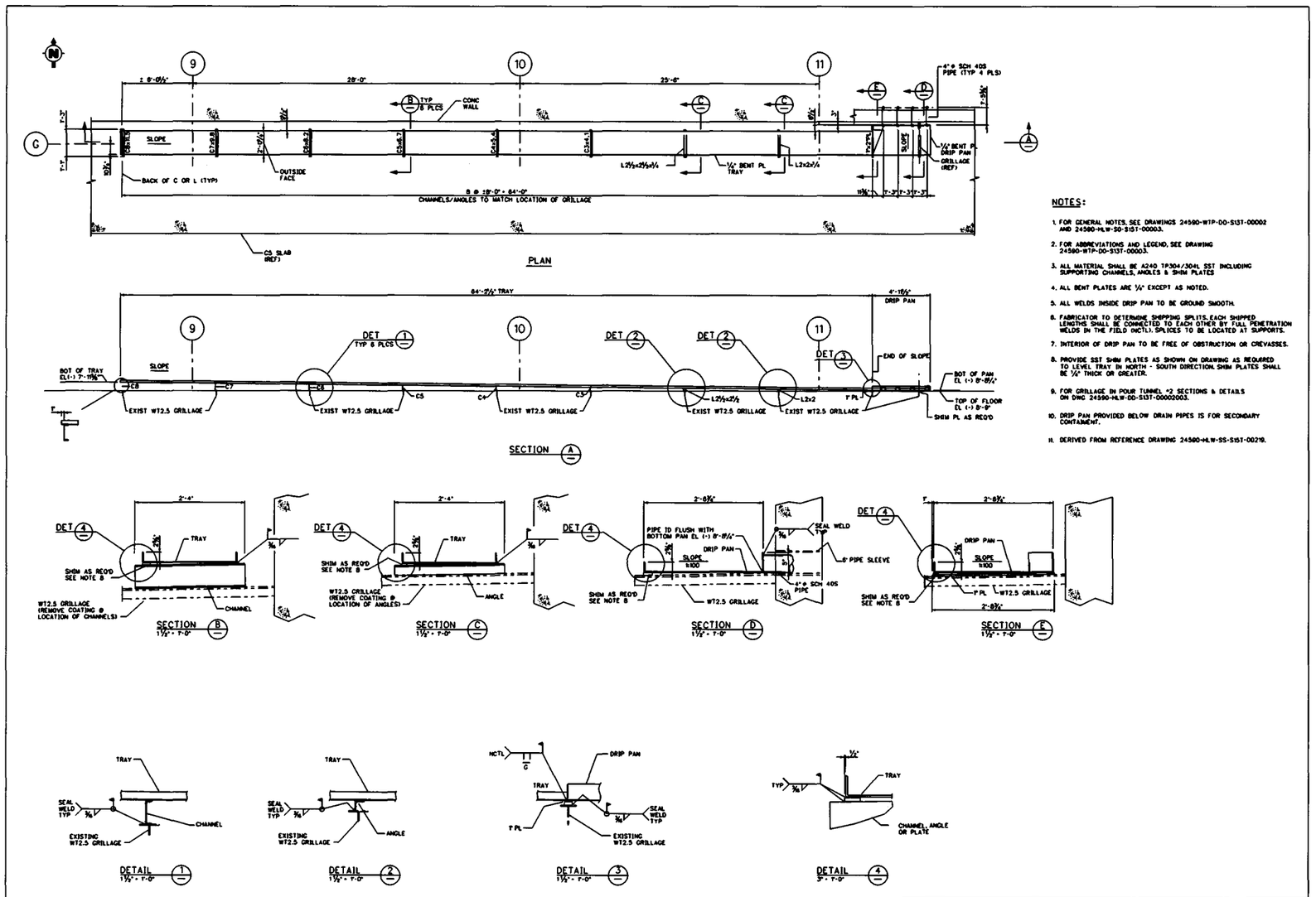

Figure 17 Typical Details; Waterstops; EMF Buildings

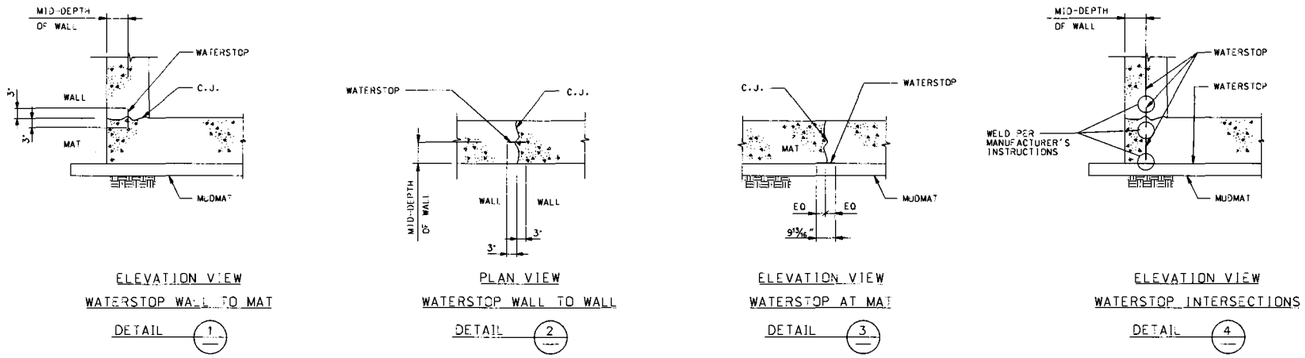

FIGURE 17

**TYPICAL DETAILS
WATERSTOPS
EMF BUILDINGS**

DOCUMENT NO. 24590-WTP-PER-CSA-02-001 PAGE 20

Figure 18 Typical Details; Liner Plate and Grillage Support Details; EMF Buildings

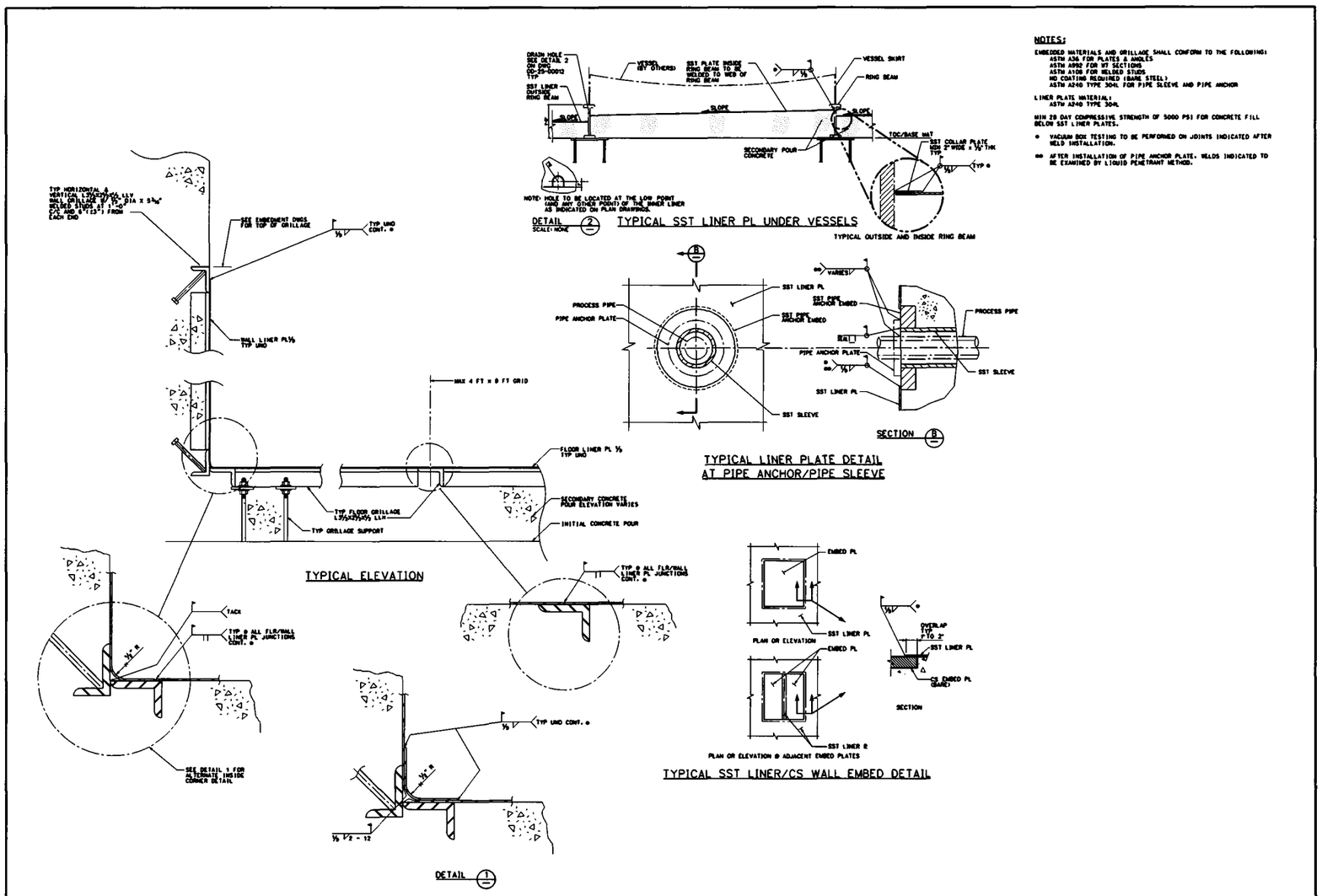

Figure 19 Typical Details; Equipment Support and Ring Beam; EMF Buildings

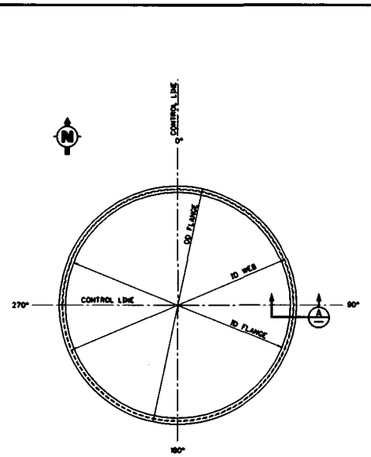

TYPICAL VESSEL RING BEAM PLAN

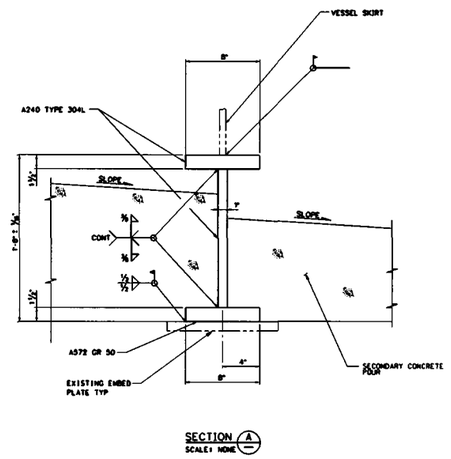

SECTION A
SCALE: NONE

NOTE:
ALL CHANNEL MATERIAL TO BE ASTM A276 TYPE 304L.

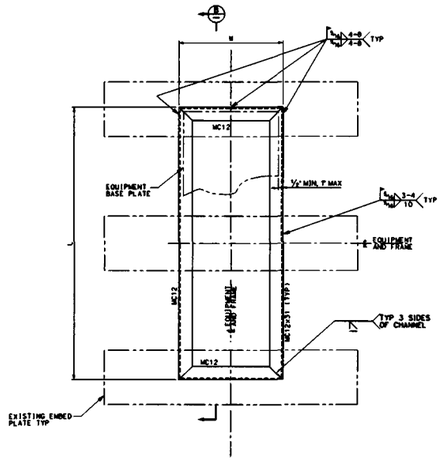

PLAN
TYPICAL EQUIPMENT SUPPORT

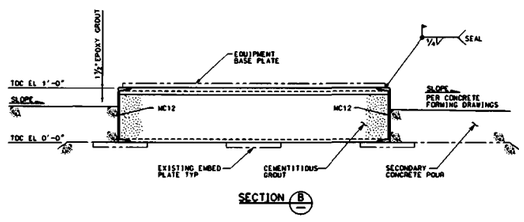

SECTION B

FIGURE 19

TYPICAL DETAILS
EQUIPMENT SUPPORT AND RING BEAM
EMF BUILDINGS

DOCUMENT NO.	PAGE:
24590-WTP-PER-CSA-02-001	22

Figure 20 Typical Details; Sumps; EMF Buildings

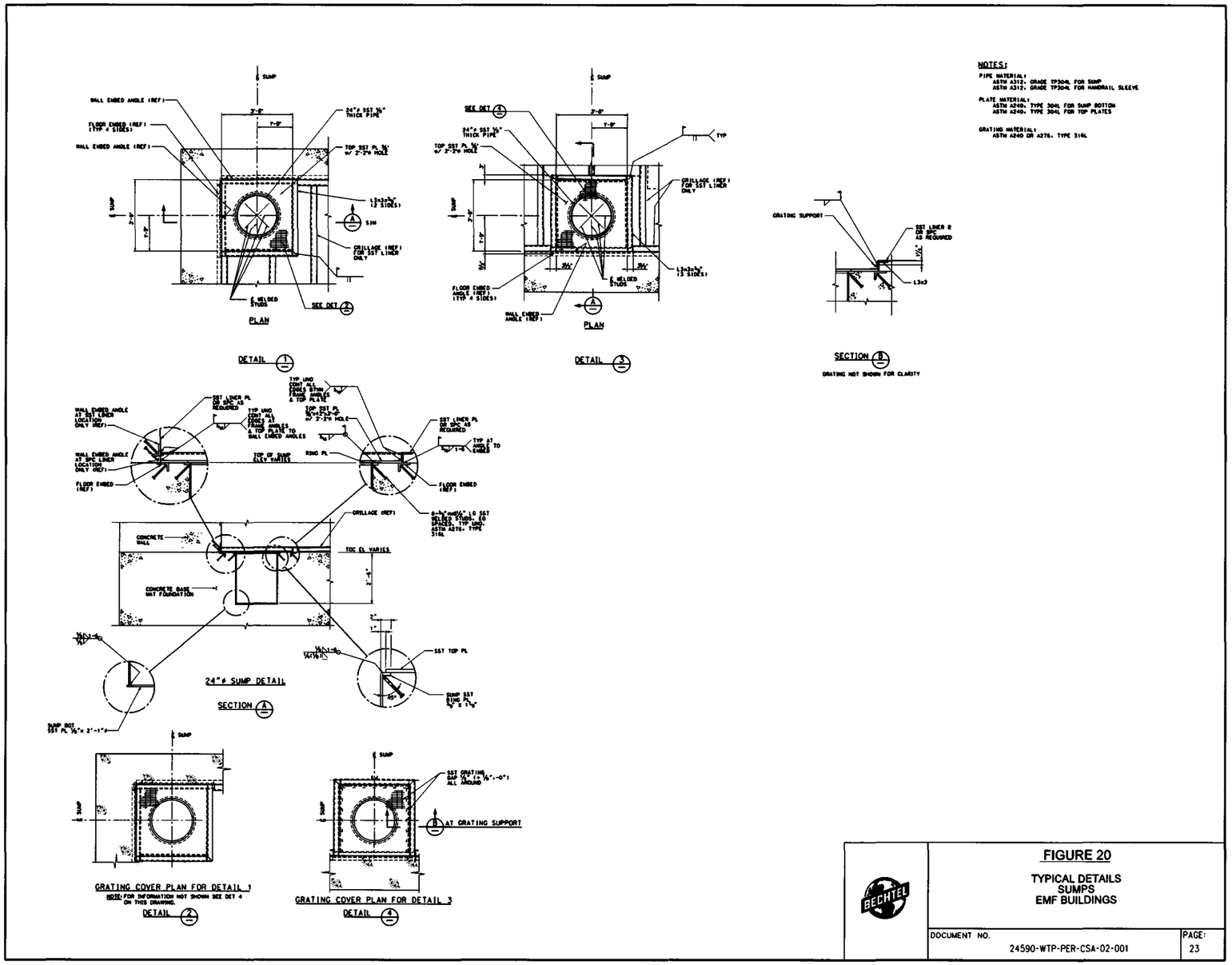

FIGURE 20

TYPICAL DETAILS
SUMPS
EMF BUILDINGS

DOCUMENT NO.	PAGE:
24590-WTP-PER-CSA-02-001	23

Figure 21 Typical Details; Wall Penetrations; EMF Buildings

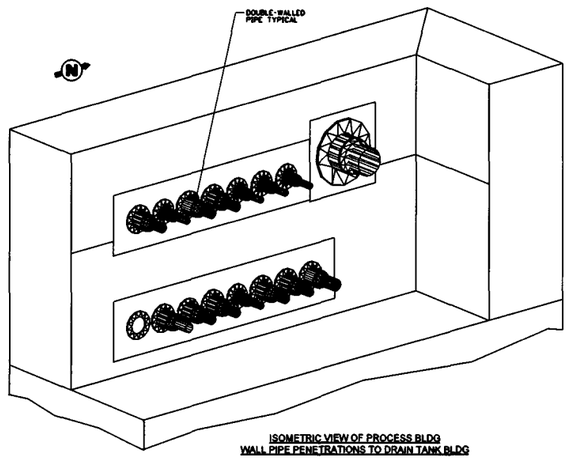

ISOMETRIC VIEW OF PROCESS BLDG
WALL PIPE PENETRATIONS TO DRAIN TANK BLDG

NOTES:
MATERIAL:
PIPE SLEEVE: STAINLESS STEEL ASTM A312 GRADE TP304L
ANCHOR COLLAR PLATE: STAINLESS STEEL ASTM A240 TYPE 304L
PLATE: STAINLESS STEEL ASTM A240 TYPE 304L
WELDED STUDS: STAINLESS STEEL ASTM A276 TYPE 316L

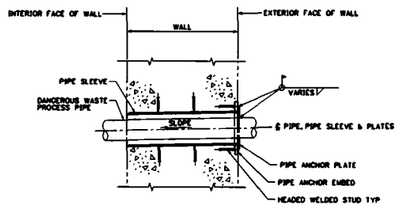

TYPICAL SECTION VIEW OF WALL PENETRATION FOR DANGEROUS WASTE PIPING WITHIN SECONDARY CONTAINMENT LINER HEIGHT

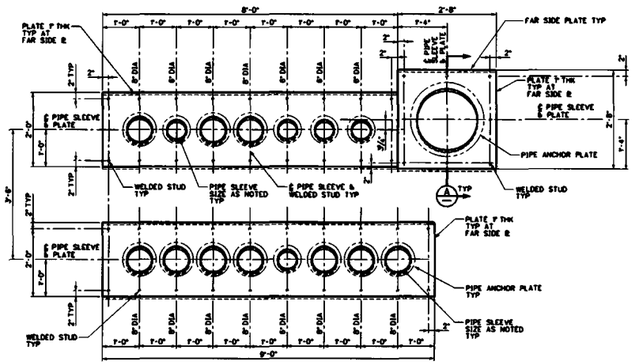

VIEW LOOKING WEST

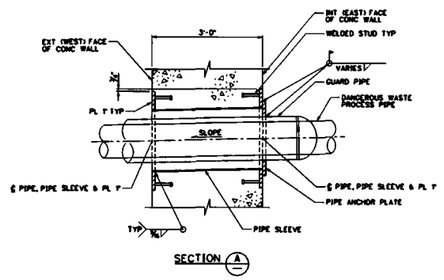

TYPICAL SECTION VIEW OF PIPE SLEEVE FOR DOUBLE -WALLED PIPE PENETRATION

FIGURE 21

TYPICAL DETAILS
WALL PENETRATIONS
EMF BUILDINGS

DOCUMENT NO. 24590-WTP-PER-CSA-02-001 | PAGE: 24

Figure 22 Typical Details; Embed Plate, Stanchion Support, Subchange Room Interface; EMF Buildings

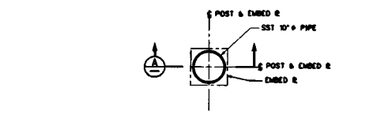

PLAN VIEW
STANCHION SUPPORT FOR STEEL COLUMN OR EQUIPMENT

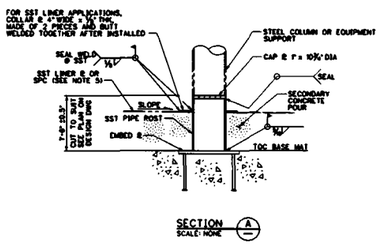

SECTION Ⓐ
SCALE: NONE

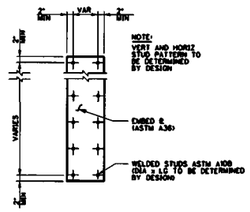

TYPICAL EMBED ℞ DETAIL

NOTES:

1. SST PIPE POSTS TO BE ASTM A312, GRADE TP 304/304L OR 316/316L WITH MIN YIELD STRENGTH OF 30 KSI.
2. SST PLATES TO BE ASTM A240 TYPE 304/304L OR 316/316L WITH MIN YIELD STRENGTH OF 30 KSI.
3. COLLAR PLATE TO BE ASTM A240 TYPE 304L BY SST LINER PLATE SUBCONTRACTOR.
4. SST WELDED STUDS TO BE ASTM A276 TYPE 316L

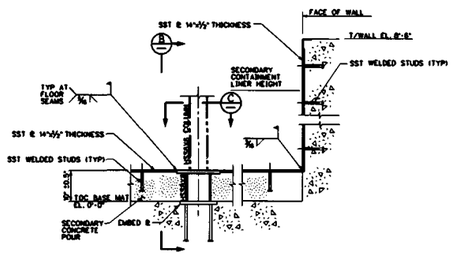

TYPICAL SUPPORT FOR STEEL ARCHITECTURAL WALL COLUMN AT PROCESS BUILDING SUBCHANGE ROOM

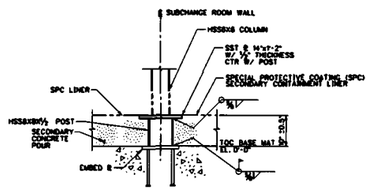

SECTION Ⓑ
SCALE: NONE

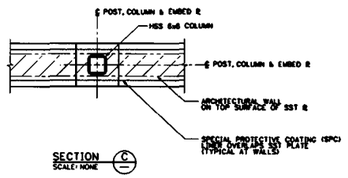

SECTION Ⓒ
SCALE: NONE

FIGURE 22

**TYPICAL DETAILS
EMBED PLATE, STANCHION SUPPORT,
SUBCHANGE ROOM INTERFACE
EMF BUILDINGS**

DOCUMENT NO.	PAGE:
24590-WTP-PER-CSA-02-001	25

R11777485

ISSUED BY
RPP-WTP PDC

RIVER PROTECTION PROJECT – WASTE TREATMENT PLANT

ENGINEERING SPECIFICATION

FOR

Field Applied Special Protective Coatings For Secondary Containment Areas

Please note that source, special nuclear, and byproduct materials, as defined in the Atomic Energy Act of 1954 (AEA) are regulated at the U. S. Department of Energy (DOE) facilities exclusively by DOE acting pursuant to its AEA authority. DOE asserts that pursuant to AEA, it has sole and exclusive responsibility and authority to regulate source, special nuclear, and byproduct materials at DOE-owned nuclear facilities. Information contained herein on radionuclides is provided for process description purposes only.

Content applicable to ALARA? ☒ Yes ☐ No

ADR No.	**Rev**
24590-WTP-ADR-CSA-02-001	3
24590-WTP-ADR-ENG-03-004	10

Specification changes retroactive? ☐ Yes ☒ No ☐ N/A (alpha revision or revision 0)

Quality Level
CM
DOE Contract No. DE-AC27-01RV14136

REV	DATE	BY	CHECK	AUTHORIZATION	APPROVER
3	5/24/16	Mitchell Loff	Ambika Chakravartty	NA	Tom Erwin / Julian Leam
2	9/2/10	EAH	LRL	LDK	JRB
1	3/16/09	TRC	LRL	LDK	JRB
0	11/10/03	TRC	LDK	JH	DTS

SPECIFICATION No. 24590-WTP-3PS-AFPS-T0006 **Rev** 3

Revision History

Revision	Reason for Revision	Q Specification Revision Only Margin Reduced?		CM Only
		YES	NO	N/A
0	Issued for Construction	N/A	N/A	N/A
1	Incorporate 24590-WTP-3PN-AFPS-00016 with modification to section 6.6.1 to read "All coating materials, thinners, solvent and cleaning materials used on SS shall be shown to have a low leachable halogens content that shall not exceed 200ppm, total sulfur content shall not exceed 400ppm sulfur. The total amounts of low melting point metals such us lead, zinc, copper, tin, antimony and mercury shall not exceed one (1) percent and mercury shall not exceed 50 ppm."; 24590-WTP-3PN-AFPS-00017 with modifications to section 6.2.1.5.2 to remove"regulated tanks", modify Appendix I note 2 to remove "or contain regulated tanks"; 24590-WTP-3PN-AFPS-00027; 24590-WTP-FC-C-)%-0120; 24590-WTP-FC-C-06-06-0068; Add section 2.1.1.1 to incorporate job mock ups; Change section 4.2 to read "Only materials that are prequalifiedin accrdance with Appendix B and the subcontractor has a current Appendix F shall be used"; Add to section 7.3.3.2 "Concrete shall be suitably roughened and textured using one of the specified methods of surface preparation during the coating system mock-ups performed and accepted by the CONTRACTOR."; Remove all section references on Appendix I Installation detail drawings; Add Appendix J to incorporate interface installation detail drawings; Delete Appendix D; Delete Appendix H.	☐	☐	☒
2	Incorporate 24590-WTP-FC-C-08-0535, 24590-WTP-FC-C-09-0102. Deleted all references to Appendix D throughout specification. Delete section 2.2.1. Added defunation for ALARA, ALARA areas, and Non-ALARA areas. Deleted term "Radiation Areas"; replaced with ALARA requirements." In section 3, updated codes codes and standards editions and added 24590-WTP-3PS-NW00-T002. In section 3.1.4, deleted 24590-WTP-GPP-SRAD-007 because it is not IFC. Clarified section 4.2. In section 4.3, added requirement for Subcontractor to submit latest MSDS. Inserted or corrected G321-E &-V category numbers in section 4.5 and 4.9. Modified section 6.4 to align with abrasive requirements in other coating specifications. In section 6.6.1, add "adhesive-backed tape or lebels" to list requiring testing for contact with stainless steel. In section 7.4.10, clarified acceptability requirment for drying time of coatings. In section 7.5.6, changed placeholder from "Later" to "Reserved for Fyture use". Added section 7.6. Reformatted secte readability. In section 8.3.1, added cross reference 8.1.6. In section 9.1.5, changed requirement for shelf life extension. Revised Appendix A. In Appendix C Table 1, added coating sustem code SW16-1, and changed SW16 to SW16-2. In Appendix C Table 2, added system code SW30 (SC-T5-P). Identified Appendix I Details as "No Scale".	☐	☐	☒
3	Extensive revision, reformatted completely, and revised items not identified. Section 4.5.2.1 modified to incorporate 24590-WTP-FC-C-16-0090 by design.	☐	☐	☒

Contents

1 Scope 1
1.1 Project Description and Location 1
1.2 Equipment, Material, and Services Required 1
1.3 Work by Others 2
1.4 Acronyms and Definitions 4
1.5 Safety/Quality Classifications 6
2 Applicable Documents 7
2.1 Codes and Standards 7
2.2 Reference Documents/Drawings 9
3 Materials 9
3.1 Coating Materials 9
3.2 Patching/Filler Materials 11
3.3 Abrasives 12
3.4 Prohibited Materials 13
4 Application 13
4.1 General 13
4.2 Pre-Surface Preparation 13
4.3 Surface Preparation 14
4.4 Coating Application 17
4.5 Remedial Work 18
5 Inspections 19
5.1 Personnel Qualifications 19
5.2 Field Coating Inspection 20
6 Storage, Handling, and Shipping 23
6.1 Coating Materials 23
6.2 Batch Information 24
7 Quality Assurance 25
7.1 General 25
8 Configuration Management 28
8.1 Design Changes Incorporated by Reference 28
9 Documentation and Submittals 28
9.1 Documentation 28
9.2 Submittals 28

Appendices

Appendix A Supplier Quality Assurance Program Requirements Data Sheet A-1

Appendix B WTP Project Special Protective Coating (SPC) Material Prequalification Requirements for Secondary Containment B-1

Appendix C Table 1 – Secondary Containment Coating Systems C-1

Appendix D Color Scheme D-1

Appendix E Coating Manufacturer's Product Identity Certification Record E-1

Appendix F Surface Preparation and Coating Inspection Form F-1

Appendix G Secondary Containment Installation Typical Details G-1

Appendix H Interface Installation Detail Drawing References H-1

1 Scope

1.1 Project Description and Location

The Hanford Tank Waste Treatment and Immobilization Plant (WTP) is a complex of radioactive waste treatment processing facilities designed and constructed by Bechtel National, Inc. for the Department of Energy (DOE). The Hanford Site tank waste will be pretreated and immobilized into stable glass form via vitrification. The WTP Facilities are located at the 200 East Area of the Hanford site near Richland, Washington.

1.2 Equipment, Material, and Services Required

This specification defines the minimum requirements for the material and coating systems, surface preparation, application, and inspection of special protective coatings (SPCs) to be field applied onto concrete and steel surfaces that have been identified as a secondary containment (SC) area. The coating systems for concrete and steel surfaces are identified in Appendix C, Secondary Containment Coating Systems, Table 2 of this specification. The CONTRACTOR shall identify the areas requiring SC coatings in the appropriate room finish schedule for each facility [i.e., Low-Activity Waste (LAW) Facility, High-Level Waste (HLW) Facility, Effluent Management Facility (EMF), Pretreatment Facility (PT Facility), Analytical Laboratory (Lab), and Balance of Facilities (BOF)].

1.2.1 Field Coating Work

Unless indicated elsewhere in the subcontract documents, the field coating work shall include the following:

1.2.1.1 Touch-up of shop or field coated carbon steel embeds prior to application of identified SC coating systems.

1.2.1.2 Surface preparation and application of the applicable coating system for concrete and steel surfaces. Corner coving on floor/wall, wall/wall corners, around concrete, steel embed attachments, grouted anchor bolts, and other items that create a corner or sharp transition in coating system direction.

1.2.1.3 Saw cutting and chipping concrete as required by applicable installation detail.

1.2.1.4 Surface preparation and application of a primer/sealer/barrier coat on shop coated steel embeds that have been determined unsuitable for the installation locations' exposure conditions in the SC enclosure area or incompatible with the specified SC coating system.

1.2.1.5 Finish color shall be as noted in Appendix D, Color Scheme 1.0.

1.2.2 Surfaces NOT to be coated:

1.2.2.1 Weld hold back areas on piping, hangers/supports, steel attachments, etc. in areas designated SC prior to coating shall be 4 inches for **field** welds.

1.2.2.2 Rubber or similar nonmetallic parts.

1.2.2.3 Non-ferrous metals unless otherwise specified by the CONTRACTOR.

1.2.2.4 Stainless steel surfaces unless specifically required by the CONTRACTOR (areas where stainless steel is welded to carbon steel, the coating overlap onto the stainless steel shall be at least 1 inch or as otherwise specified).

1.2.3 Safety

1.2.3.1 All surface preparation and coatings work shall comply with all applicable environmental and safety provisions, laws, regulations in local jurisdiction (e.g., county and state). Work being performed in the United Sates shall be in strict accordance with OSHA 29 CFR 1910, *Occupational Safety and Health Standards* for state and local safety and environmental requirements.

1.2.3.2 The SUBCONTRACTOR shall comply fully with OSHA Hazard Communication Standard 29CFR 1910. Safety data sheets (SDS) for all materials, including thinners and cleaning solvents, shall be obtained from the materials manufacturer and made available at the place of application for review.

1.2.3.3 The volatile organic compound (VOC) content of all materials shall comply with federal, state, local, and other regulatory requirements.

1.2.3.4 The SUBCONTRACTOR shall control safe working and environmental conditions employing items such as but not limited to barricades, masking/tarping, ventilation, dehumidification, and safety watches to provide safe quality work from surface preparation through application, curing, and inspection activities.

1.2.3.5 The SUBCONTRACTOR shall be responsible for proper disposal of liquid or solid waste generated during the work described herein (residual coating material, thinners, solvent, wipes, rags, etc.).

1.3 Work by Others

1.3.1 The SUBCONTRACTOR shall supply all personnel, coating materials, and equipment, including all personal protective equipment (PPE), safety, rigging/access (as required), masking protection, containment, environmental control/dehumidification/ventilation equipment, area covering to protect from direct sunlight and inclement weather, and all consumables. The SUBCONTRACTOR shall perform all pre-surface preparation, surface preparation, coating application, inspection, and documentation for all SPCs work.

1.3.1.1 The SUBCONTRACTOR shall perform a job mock-up for each coating system identified for installation. Special concrete walls and floors or a sample area of the facility shall be provided by the CONTRACTOR for the mock-ups. Each sample area shall be approximately 5' x 5' in size. The mock-up coating sample shall be applied in accordance with this specification and CONTRACTOR accepted procedures. Surface defects in the concrete shall be filled flush with the surface plane and shall result in a smooth, decontaminable finish when top-coated with the remainder of the coating system. The completed mock-up shall provide a surface finish acceptable to the CONTRACTOR. The accepted mock-up shall be used as a reference standard of quality for surface preparation and applied coating surface finish. At the CONTRACTOR's notification, the

SUBCONTRACTOR shall inspect all concrete surfaces scheduled for coatings to ensure they are suitable for performing the specified surface preparation and coating application. Within 72 hours of notification, the SUBCONTRACTOR shall notify the CONTRACTOR in writing of items found to be damaged or otherwise unsuitable for surface preparation or coating application.

1.3.2 The SUBCONTRACTOR shall provide surface preparation of overlap or tie-in areas on stainless steel, concrete, and carbon steel surfaces as required.

1.3.3 The SUBCONTRACTOR shall install flexible joint sealant, flexible epoxy filler material, foam backer rod, bond breaker tape, and material where specifically identified for use by the CONTRACTOR.

1.3.4 The SUBCONTRACTOR shall store all coating materials in accordance with this specification and CONTRACTOR accepted procedures. The coating system and associated coating materials shall be in accordance with Appendix C, Table 1, Secondary Containment Coating Systems, Table 2, Secondary Containment Coating Materials or as otherwise identified by the CONTRACTOR. All coating materials shall be used on a first-in first-out basis, in which the oldest batch of any given material or component is used before batches with a later expiration date.

1.3.5 The SUBCONTRACTOR shall perform all inspections and tests contained in this specification prior to acceptance by the CONTRACTOR.

1.3.6 The SUBCONTRACTOR shall provide application and inspection documentation for all coating work accepted by the CONTRACTOR.

1.3.7 The SUBCONTRACTOR shall provide marking materials that are fully compatible with the coating system(s) specified. Marking materials shall be suitable for use on stainless steel.

1.3.8 The SUBCONTRACTOR shall provide environmental control equipment as necessary for surface preparation, coating application, and curing.

1.3.9 The SUBCONTRACTOR shall only use inspection equipment that is currently calibrated and controlled by a calibration program accepted by the CONTRACTOR.

1.3.10 The SUBCONTRACTOR shall coordinate all field coating work with the Contractor prior to starting work on a daily basis.

1.3.11 The SUBCONTRACTOR shall give the CONTRACTOR at least 24 hours' verbal notice for all agreed upon inspection witness and hold points.

1.3.12 The CONTRACTOR shall ensure that approval from the Washington State Department of Ecology has been received for each Secondary Containment Dangerous Waste Permit (DWP) area to receive SPCs in accordance with this specification prior to providing the SUBCONTRACTOR approval to install coatings.

1.4 Acronyms and Definitions

1.4.1 Acronyms

ALARA	As Low As Reasonably Achieveable
ANSI	American National Standards Institute
ASTM	American Society for Testing and Materials
BOF	Balance of Facilities
DFT	dry film thickness
DOE	US Department of Energy
DWP	Dangerous Waste Permit
ECF	epoxy concrete floors
ECW	epoxy concrete walls
EMF	Effluent Management Facility
ESE	epoxy steel embeds
HLW	high-level waste
Lab	Analytical Laboratory
LAW	low-level waste
MSDS	material safety data sheet
NCF	epoxy Novalac concrete floors
NCW	epoxy Novalac concrete walls
NFPA	National Fire Protection Association
NIST	National Institute of Standards and Technology
QA	Quality Assurance
QAP	Quality Assurance Program
SC	secondary containment
SDDR	supplier deviation dispostion request
SPC	special protective coatings
SSPC	Society for Protective Coatings
VOC	volatile organic compounds
WAC	Washington Administrative Code
WFT	wet film thickness
WTP	Waste Treatment and Immobilization Project

1.4.2 Definitions

1.4.2.1 ALARA areas – The designation used to identify the "Work Area" where personnel exposure to radiation and radioactive materials is managed and controlled at levels As Low As Reasonably Achievable (ALARA) by employing Special Protective Coatings (SPCs) to facilitate decontamination. Typically, this includes C2 areas floors, C3 and occupied C5 areas (floors, walls, ceilings and various commodities) up to 7.5 feet above the floor finish or platform and reachable surfaces within 40 inches of the "Work Area".

1.4.2.2 Batch – A quantity of coating made in one production run. A unique batch number is assigned for each production run of the epoxy coating material, the curing agent, fillers, and the thinner.

1.4.2.3 Bug holes – Small regular or irregular cavities resulting from entrapment of air bubbles in the surface of formed concrete during placement and consolidation.

1.4.2.4 CONTRACTOR – Means BECHTEL NATIONAL, INC. (BNI) and all of its authorized representatives acting in their professional capacities.

1.4.2.5 Curing membrane – Materials applied to prevent the moisture in uncured concrete from evaporating too rapidly. Where special protective coatings (SPCs) are being applied, the curing membranes or compounds should not contain paraffin, oil, silicone, or other contamination that could compromise proper coating adhesion.

1.4.2.6 Dry film thickness (DFT) – The thickness of an applied coating, once dry or cured. Usually expressed in mils (each mil is 1/1000 of an inch). Measured using a wet film thickness (WFT) gage and calculating DFT based on coating material volume solids. Alternatively measured using an ultrasonic DFT device or using a destructive test that cuts the dry film and optically measures the DFT.

1.4.2.7 Efflorescence – A white crystalline or powdery deposit on the surface of concrete. Efflorescence results from leaching of lime or calcium hydroxide out of the permeable concrete mass over time by water, followed by reaction with carbon dioxide and acidic pollutants.

1.4.2.8 Fish eyes (cratering) – Formation of holes or visible depressions in the coating film caused by a foreign particle on the substrate prior to coating application.

1.4.2.9 Form release agents – Compounds such as glossy paint or other film forming release material applied to forms to allow easy removal of forms. Where special protective coatings (SPCs) are being applied, the form release agent should not impart a residue of paraffin, oil, silicone, or other contaminant onto the surface that could compromise proper coating adhesion.

1.4.2.10 Holiday – A pinhole, skip, discontinuity, or void in the applied coating film.

1.4.2.11 Hydration – The reaction of water with the calcium silicate, aluminate, or aluminoferrite components of fine cement grains, necessary for the setting and densifying of concrete. Hydration results in the formation of calcium hydroxide and colloidal gels, which occupy a larger volume than the original cement.

1.4.2.12 Hydrostatic pressure – The pressure exerted by water at rest.

1.4.2.13 Item – An all-inclusive term used in place of any of the following: appurtenance, assembly, component, equipment, material, module, part, structure, sub-assembly, sub-system, system, unit, or support systems.

1.4.2.14 Laitance – A thin, weak, brittle layer of cement and aggregate fines in a concrete surface. The amount of laitance is influenced by the degree of working or amount of water in the concrete. For the application of special protective coatings (SPCs) all laitance must be removed to sound, dense concrete.

1.4.2.15 Mfg. std. coating – A manufacturer's standard coatings system applied to off-the-shelf items or standard line items of routine manufacture that are not specifically manufactured for the WTP Project.

1.4.2.16 NIST – National Institute of Standards and Technology.

1.4.2.17 Non-ALARA areas – The designation for areas outside of the defined "Work Area" where the potential for personnel to come in contact with radioactive material is low. This includes all C2 walls, all C1 areas and all other areas that do not have a contamination class designation.

1.4.2.18 Outgassing – The upward and outward emission of air or moisture vapor from concrete or coatings.

1.4.2.19 Pinhole – Minute hole visible in the applied coating without magnification, that appear to penetrate one or more layers of the coating film.

1.4.2.20 Profile – The surface roughness resulting from surface preparation by abrasive blasting or other CONTRACTOR accepted methods (Refer to Section 4.3.4.3).

1.4.2.21 Sag – The running of freshly applied coating on a vertical surface due to being applied too thick (same definition for runs and drips).

1.4.2.22 SUBCONTRACTOR – Means the company, corporation, partnership, individual, or other entity to which this subcontract (purchase order/material requisition) is issued, its authorized representatives, successors, and permitted assigns.

1.4.2.23 Supplier deviation disposition report (SDDR) – A standard WTP Project document that can be used by a vendor or SUBCONTRACTOR to identify an actual or potential deviation or discrepancy that requires engineering evaluation and disposition prior to acceptance.

1.4.2.24 Surface hardeners – Compounds applied to a concrete surface to improve hardness, and to decrease permeability.

1.4.2.25 Surface porosity – Permeability of the surface that allows absorption of vapors, moisture, chemicals, and coating liquids. Small interconnected voids that allow fluids to penetrate an otherwise impervious material.

1.4.2.26 Training and certification – Training to include an understanding of the specification, CONTRACTOR accepted work procedures, and manufacturer's published instructions. Certification to include a documented performance test demonstrating quality work acceptable to the CONTRACTOR (Refer to Sections 4.1.2, 7.1.5.1, 7.1.5.2, 9.2.5, and Appendix A, Supplied Quality Assurance Program Requirements Data Sheet).

1.5 Safety/Quality Classifications

All SPCs are designated as commercial grade and non-safety. The SPC quality program requirements must comply with DOE Order 414.1C as identified in Appendix A. The full order is not applicable (also refer to Section 5). The **NQA-1 Quality Assurance requirements do not apply to the manufacture or application of SPCs.** However, SPCs used in high radiation areas (>2E8 rads over 40 years) shall be prequalified in accordance with Appendix B, WTP Project Special Protective Coating (SPC) Material Prequalification Requirements for Secondary Containment.

2 Applicable Documents

The latest applicable edition of the following codes, standards, specifications, or WTP procedures form a part of this specification.

2.1 Codes and Standards

2.1.1 American Society for Testing and Materials (ASTM)

ASTM D412-98, R02, 06, R08	*Standard Test Methods for Vulcanized Rubber and Thermoplastic Elastomers-Tension*
ASTM D1653-93, R99, 03, R08	*Standard Test Methods for Water Vapor Transmission for Organic Coating Films*
ASTM D3276-00, 05, 07	*Standard Guide for Painting Inspectors (Concrete and Masonry Substrates)*
ASTM D3912-95, 01	*Standard Test Method for Chemical Resistance of Coatings Used in Light-Water Nuclear Power Plants*
ASTM D4060-01, 07	*Standard Test Method for Abrasion Resistance of Organic Coatings by the Taber Abraser*
ASTM D4082-02	*Standard Test Method for Effects of Gamma Radiation on Coatings for Use in Light-Water Nuclear Power Plants*
ASTM D4138-94, R01, 07	*Test Method for Measurement of Dry Film Thickness of Protective Coating Systems by Destructive Means*
ASTM D4227-99, R05, 05	*Practice for Qualification of Journeyman Painters for Application of Coatings to Concrete Surfaces of Safety Related Areas in Nuclear Facilities*
ASTM D4228-99, R05, 05	*Practice for Qualification of Journeyman Painters for Application of Coatings to Steel Surfaces of Safety Related Areas in Nuclear Facilities*
ASTM D4258-83, R05, 05	*Practice for Surface Cleaning of Concrete for Coating*
ASTM D4259-88, R06	*Standard Practice for Abrading Concrete*
ASTM D4262-83, R05, 05	*Standard Test Method for pH for Chemically Cleaned or Etched Concrete Surfaces*
ASTM D4263-83, R05	*Test Method for Indicating Moisture in Concrete by the Plastic Sheet Method*
ASTM D4285-83, R06	*Test Method for Indicating Oil or Water in Compressed Air*
ASTM D4414-95, R07	*Practice for Measurement of Wet Film Thickness of Organic Coatings by Notch Gages*

ASTM D4417-93, R99, 03	*Field Measurement of Surface Profile of Blast Cleaned Steel*
ASTM D4537-91, R96, 04	*Standard Guide for Establishing Procedures to Qualify and Certify Inspection Personnel for Coating Work Inspectors In Nuclear Facilities*
ASTM D4541-02	*Standard Test Method for Pull-Off Strength of Coatings Using Portable Adhesion Testers*
ASTM D4940-98, R03	*Test for Conductimetric Analysis of Water Soluble Ionic Contaminants of Blasting Abrasives*
ASTM D5139-90, R01	*Standard Specification for Sample Preparation for Qualification Testing of Coatings Used in Nuclear Power Plants*
ASTM D5144-00	*Standard Guide for Use of Protective Coating Standards In Nuclear Power Plants*
ASTM D5498-01	*Standard Guide for Developing a Training Program for Coating Work Inspectors in Nuclear Facilities*
ASTM D6132-97, 04, 08	*Standard Test Method for Nondestructive Measurement of Dry Film Thickness of Applied Organic Coatings Over Concrete Using an Ultrasonic Gage*
ASTM D6237-98, 03	*Standard Guide for Painting Inspectors (Concrete and Masonry Substrates)*
ASTM E337-02, R07	*Test for Relative Humidity by Wet-and-Dry Bulb Psychrometer*

2.1.2 The Society for Protective Coatings (SSPC)

SSPC-AB1-91, R04, R07	*Mineral and Slag Abrasive*
SSPC-PA2-94, 04	*Measurement of Dry Paint Thickness with Magnetic Gages*
SSPC-SP1-82, R04	*Solvent Cleaning*
SPC-SP6-00, 07	*Commercial Blast Cleaning*
SSPC-SP7-00, 07	*Brush-Off Blast Cleaning*
SSPC-SP10-00, 07	*Near-White Metal Blast Cleaning*
SSPC-SP11-87, R04	*Power Tool Cleaning to Bare Metal*
SSPC-SP12-95, 02	*Surface Preparation and Cleaning of Metals by Waterjetting Prior to Recoating*
SSPC-SP13-97, R03	*Surface Preparation of Concrete*
SSPC-VIS1-02, R04	*Visual Standard for Abrasive Blast Clean Steel*
SSPC-VIS3-93, 04	*Visual Standard for Power and Hand Tool Cleaning*

2.1.3 Occupational Safety and Health Administration (OSHA)

OSHA 29 CFR 1910	*Occupational Safety and Health Standards*

2.1.4 National Fire Protection Association (NFPA)

NFPA 801 – 2003	*Standard for Fire Protection for Facilities Handling Radioactive Materials*

2.1.5 Department of Energy (DOE)

DOE Std. 1066-97	*DOE Standard, Fire Protection Design Criteria*
DOE Order 414.1C Change 1 Issued 6/17/07	*Quality Assurance*

2.2 Reference Documents/Drawings

2.2.1 WTP Project Documents

24590-WTP-3PS-AFPP-T0001	*Painting (Professional Line Products) 09912*
24590-WTP-3PS-AFPS-T0002	*Special Protective Coating Limited-Combustible Testing Protocol*
24590-WTP-3PS-AFPS-T0003	*Field Applied Special Protective Coating for Steel Items and Equipment*
24590-WTP-3PS-AFPS-T0004	*Field Applied Special Protective Coatings for Concrete Surfaces*
24590-WTP-3PS-PX04-T0001	*Shop Applied Fusion Bonded Epoxy Coating for Underground Carbon Steel Pipe*
24590-WTP-GPP-SRAD-007	*Classification of Areas*

3 Materials

3.1 Coating Materials

3.1.1 All SPC SC materials prequalified and approved for use on the WTP Project can be found in Table 2 of Appendix C. Appendix C contains the generic coating systems and approved coating materials. The generic coating systems (primarily Epoxy or Epoxy Novolac materials) used on concrete and steel in SC areas shall be coordinated with the generic coating materials indicated in the Architectural Room Finish Schedules for the LAW, HLW, EMF, PTF, Lab, and select areas of BOF and their physical location. The Architectural Room Finish Schedules will identify coating materials for SC based on evaluation of chemical exposure, temperature, and mechanical abuse based on a case-by-case criteria and specifically tailored for the conditions/exposure that is to be expected.

3.1.1.1 All SPC SC materials applied to concrete or steel items located in ALARA areas are prequalified and approved for use in accordance with Appendix B. All SPCs applied to the building structure in ALARA areas or in any of the process buildings shall employ approved coating materials as defined in Appendix B.

3.1.1.2 Coating materials – including the primer, intermediate, and finish coat on a given item – shall be from the same manufacturer.

3.1.1.3 Secondary containment repair materials shall either be the same as the initial application, be recommended by the manufacturer, or be shown compatible with the original coating and acceptable to the CONTRACTOR. Repair materials shall be in pre-measured units, and only complete kits shall be mixed. Splitting or breaking down pre-measured units of multi-component coating materials may be considered if the SUBCONTRACTOR prepares a procedure that requires accurate measurement of all materials, and the SUBCONTRACTOR's quality control (QC) inspector monitors/verifies each and every mix. This procedure must be submitted to the CONTRACTOR for review and permission to proceed.

3.1.1.4 Project color requirements are found in Appendix D.

3.1.2 The volatile organic compound (VOC) content of all materials shall comply with federal, state, local, or other regulatory requirements that have jurisdiction. The maximum allowable VOC for this Project is 3.8 lbs/gal (450 g/liter).

3.1.3 Coating Over Stainless Steel

3.1.3.1 All coating materials, thinners, solvents, and cleaning materials used on stainless steel shall be shown to comply with the following requirements:

- Leachable halogen content shall not exceed 200 ppm
- Total sulfur content shall not exceed 400 ppm
- Total low melting point metals (such as lead, zinc, copper, tin, antimony, and mercury) shall not exceed 1%. Of this, mercury shall not exceed 50 ppm. These low melting point metals shall not be intentionally added during the manufacture of the coating.

3.1.3.2 No coating is required on stainless steel surfaces unless determined by the CONTRACTOR to be at risk from chloride exposure.

3.1.3.2.1 Where applicable, refer to WTP Project specification 24590-WTP-3PS-PX04-T0004, *Engineering Specification for Epoxy Coating of Stainless Steel Items That are Buried, Embedded or Insulated* for specific requirements for applying coatings on stainless steel.

3.1.3.2.2 Sherwin Williams Macropoxy 646 and Carboline Carboguard 890 are the only coatings approved for use on stainless steel surfaces.

3.1.3.2.3 Repair coating materials shall be the same as those originally used.

3.2 Patching/Filler Materials

3.2.1 Materials used to patch or fill holes, shrinkage cracks, and defects in the concrete shall meet the following requirements:

3.2.1.1 For holes larger than 1/2 inch in its largest dimension, the filler may be a non-shrink, structural concrete grout with a slump sufficient to fill holes on a vertical or overhead surface, while staying flush with the surface plane. The concrete structural grout shall be compatible with the SPC system specified for use on the concrete surface. Compatibility shall be verified by applying the SPC over a cast sample of the structural concrete grout followed by a pull-off adhesion of at least 200 psi per ASTM D4541, *Standard Test Method for Pull-Off Strength of Coatings Using Portable Adhesion Testers* using test procedures applicable for Type II and Type IV instruments listed in Annex A.2 and A.4.

3.2.1.2 For holes up to 2 inches in its largest dimension, the filler may be a 100% solids proprietary rigid polymeric filler material as recommended by the SPC manufacturer with a slump sufficient to fill holes on a vertical or overhead surface, while staying flush with the surface plane. The polymeric filler may be applied in more than one application to fill large voids flush with the concrete surface plane of concrete to steel embed surface plane. The proprietary polymeric filler material shall be compatible with the SPC system specified for use on the concrete surface. Compatibility shall be verified by applying the SPC over a cast sample of the proprietary filler material followed by a pull-off adhesion of at least 200 psi per ASTM D4541 using test procedures applicable for Type II and Type IV instruments listed in Annex A.2 and A.4.

3.2.1.2.1 Rigid polymeric filler materials used in R5 areas, where the 40-year accumulated radiation level will be greater than 2E8 rads that are not made with the same generic resin type, shall be radiation tolerance tested in combination with the SPC system specified for use in that particular area. The specimens shall be prepared for testing as follows:

- Using the standard concrete test blocks identified in Appendix B, drill a hole ½" x ½" in each face of each block. Fill the hole with the proposed filler material flush with the surface plane of the block. Apply the SPC systems identified for use in the R5 areas. Perform radiation tolerance testing per Appendix B.

3.2.1.3 For stable non-moving, cracks fill flush with the surface plane using a 100% solids proprietary polymeric filler material recommended by the SPC manufacturer as defined in Section 3.2.1.2. Large cracks shall be routed out as shown on Appendix G, Secondary Containment Installation Typical Details Installation Detail 4.

3.2.1.4 Construction Joints

The Washington Administrative Code (WAC) requires that DWP vault systems (concrete walls and floor areas used for SC) be provided with chemical-resistant water stops at all joints, and be provided with an impermeable interior coating or lining that is compatible with stored waste in accordance with WAC 173-303-640[4][e][ii] [C & D]. Water stop installation details are provided in 24590-WTP-PER-CSA-02-001, *Secondary Containment Design.* Following installation of water stops, concrete is still required to be coated per the coating systems described in Appendix C Table 2.

3.2.1.4.1 For construction joints (other than those at inside wall-to-wall or wall-to-floor corners) in walls or floors within areas required for SC DWP and/or Non-DWP, a formed or created (e.g., saw-cut) rectangular slot shall be provided by others, centered on the construction joint after the concrete is placed and cured. Apply the specified coating system primer in the joint, install a bond breaking tape in the base of the joint, and then install the flexible epoxy filler flush with the concrete surface and overcoat the joint with the specified coating system. Refer to Appendix G, Installation Detail 3B.

3.2.1.5 For coving in corners (filler material with 2-inch radius), use a flexible epoxy filler material. Where coving materials will serve as a water stop, the prequalification requirements in Appendix B, Section 1.2.10 apply.

3.2.1.5.1 Secondary containment for DWP tank and miscellaneous unit areas that do not have free flowing drains and do not have chemical-resistance water stops at construction joints in accordance with WAC 173-303-640[4][e][ii][C] must use the glass reinforced coving installation detail. Refer to Appendix G for Installation Details 2A and 2B. The use of glass reinforced coving and SPCs for DWP areas must receive approval from Department of Ecology prior to installation.

3.2.1.5.2 Secondary containment areas that do not have regulated tanks but do have free flowing drains are not required to use the glass reinforced coving installation detail. Instead, refer to Appendix G for Installation Details 1A and 1B.

3.2.1.5.3 Secondary containment for non-DWP areas that do not have free flowing drains are not required to have chemical-resistance water stops at construction and must use the glass reinforced coving installation details. Refer to Appendix G for Installation Details 2A and 2B. If the proximity of permanent plant equipment or material (e.g. drains, ladder, piping, electrical, etc.) prohibits the full 2-inch radius coving, the coving radius may be reduced to accommodate the coating installation.

3.3 Abrasives

3.3.1 Abrasives for blast cleaning shall be clean, free of oil or contaminants, and dry. The particle size shall be capable of producing the specified surface texture or surface profile. Mineral and slag abrasives shall meet the requirements of Standard by Society of Protective Coatings (SSPC) AB-1. The first batch/lot of non-packaged abrasives shall be tested for water soluble contaminants and the conductivity shall not exceed 1,000 microsiemens/cm when tested in accordance with ASTM D4940, *Test for Conductimetric Analysis of Water Soluble Ionic Contaminants of Blasting Abrasives,* Section 1.0-2.0. Abrasives used at the WTP Project site shall be < 1% silica.

3.3.2 When using reclaimed steel grit/shot abrasive, the particle size shall be capable of producing the specified surface texture. All reclaimed abrasives shall be tested for water-soluble contaminants and conductivity. Conductivity shall not exceed 1,000 microsiemens/cm when tested in accordance with ASTM D 4940, Section 1.0-2.0.

3.3.3 Reclaimed grit used for abrasive cleaning shall be tested for the presence of oil and grease by immersing a sample of spent abrasive in clean tap water and checking for oil flotation. Tests shall be made at the start of blasting and every 4 hours thereafter. If oil is evident, the contaminated abrasive shall be cleaned or replaced. All surfaces blasted since the last

successful test shall be completely cleaned of contamination, then re-blasted using clean abrasive.

3.3.4 Expendable abrasive (Green Diamond/Black Beauty) shall be used on a once only basis and then discarded.

3.3.5 Water Quality

3.3.5.1 Water used for wet abrasive blasting or high pressure water jetting shall be clean tap or potable water and shall not exhibit any evidence of an oily sheen.

3.4 Prohibited Materials

3.4.1 Refer to 24590-WTP-LIST-CON-08-0001 *List of Restricted Materials* for a list of restricted materials for use on the WTP Project.

3.4.2 Refer to Section 3.1.3 for material restrictions for use on stainless steel items and equipment.

4 Application

4.1 General

4.1.1 It shall be the SUBCONTRACTOR's responsibility to stop the surface preparation and coating at any time when conditions exist that might adversely affect the quality. The CONTRACTOR's representative may reject any prepared or coated surfaces not in compliance with this specification.

4.1.2 Coating application personnel shall be individually qualified and certified in accordance with the SUBCONTRACTOR's accepted written procedures and classroom training on the WTP Project specifications. Guidance for qualifying painters/application personnel are contained in ASTM D4228, *Standard Practice for Qualification of Coating Applicators for Application of Coatings to Steel Surfaces* and ASTM D4227, *Standard Practice for Qualification of Coating Applicators for Application of Coatings to Concrete Surfaces*, Sections 1-10 and Figure #2 or others as accepted by the CONTRACTOR.

4.1.3 Mock-ups for each coating system shall be satisfactorily completed and approved by the CONTRACTOR. A portion of the permanent coating installation may be designated as a mock-up during each step of the coating application as approved by the CONTRACTOR.

4.2 Pre-Surface Preparation

4.2.1 Prior to mechanical cleaning, the surfaces to be coated shall be cleaned in accordance with SSPC-SP1, *Solvent Cleaning* to remove oil, grease, dirt, silicone, marks made with waxy or greasy markers, graffiti, curing compounds, or form release residue or other foreign matter that could interfere with the proper bonding of the coating. The SUBCONTRACTOR shall inspect the floor for surface hardeners. Surface hardeners shall be removed prior to applying SPCs.

4.2.2 Inspection of surfaces exhibiting fins, ridges, and sharp projections or surfaces that require repair of honeycomb areas, tie rod holes, and cavities that are greater than 1/2 inch in its largest dimension (i.e., length, width, or depth) or cracks wider than 1/8 inch shall be performed by the SUBCONTRACTOR and includes a punch list to the CONTRACTOR. These defects must be removed or corrected prior to applying any coating.

4.2.3 All sharp corners that are scheduled to receive SPCs shall be included in the punch list and rounded to a radius of no less than 1/8 inch by others.

4.2.4 The SUBCONTRACTOR shall inspect all joint details and the configuration of the finished concrete sections in relation to the application of materials as shown in Appendix G, Secondary Containment Installation Details and the requirements of this specification.

4.2.5 Any remaining sharp edges, weld spatter, burrs, fins, ridges, tie rods, or projections found after the start of coating work shall be completely removed by grinding or other means. Pneumatic tools shall not be used unless they are fitted with effective oil and water traps on the exhaust air. If the steel embeds exhibit salt deposits, the area shall be pressure water washed (e.g., 2,000-5,000 psi) with demineralized water to remove the soluble salt contamination prior to abrasive blasting/water jetting.

4.2.6 Floor/wall and wall/wall coving shall be installed using the same flexible epoxy filler material defined in Section 3.2.1.5 or a filler material as recommended by the coating manufacturer and accepted by the CONTRACTOR. Coving shall be installed after concrete surface preparation and shall comply with the installation details in Appendix G.

4.2.7 To ensure a seal and a smooth transition from concrete surfaces onto steel embed plates, the concrete shall be chipped away from the edge of the embed plate at least 1/2 inch and at least 1/4 inch below the surface plane of the embed plate. The chipped away area shall be filled flush between the concrete and steel embed plate using the same rigid filler material defined in Section 3.2.1.2 or a filler material as recommended by the coating manufacturer and accepted by the CONTRACTOR (Refer to Appendix G).

4.2.8 To provide a structurally sound termination of a floor coating, a perimeter key shall be placed in the floor (Refer to Appendix G).

4.3 Surface Preparation

4.3.1 Prior to the start of work, the SUBCONTRACTOR shall examine all surfaces to be coated to determine their acceptability for the specified coating application work. If the surfaces are found to be unacceptable, the SUBCONTRACTOR shall either return the surface to an acceptable condition or immediately notify the CONTRACTOR in the punch list (Section 4.2.2) if the repairs are outside the scope of work. Coating work shall not commence until corrective action has been taken. Starting work prior to completion of corrective action shall preclude any subsequent claim by the SUBCONTRACTOR. The CONTRACTOR may require corrective action at the SUBCONTRACTOR's expense.

4.3.2 The abrasive mixture and the compressed air shall be clean, dry, and oil free. Moisture traps, in addition to oil and water separators mounted on the compressor, shall be used in compressed air lines to remove oil and moisture from air close to the point of use (Refer to Section 4.3.4.4 and 5.2.1.6).

4.3.3 Concrete Surfaces

4.3.3.1 Floors and walls shall be free of curing compounds, laitance, dirt, or other residue that could interfere with proper adhesion of the coating system.

4.3.3.2 Concrete shall be suitably roughened and textured using one of the specified methods of surface preparation during the coating system mock-ups performed and accepted by the CONTRACTOR. To achieve a clean roughened surface suitable for the specified coating systems, surfaces may be dry-abrasive blasted, wet-abrasive blasted (Refer to ASTM D4259, *Standard Practice for Abrading Concrete*, Sections 1.0-10.0) or cleaned and roughened by high pressure (10,000 psi to 25,000 psi) water jetting using a rotating head hand lance or self-propelled robot (Refer to SSPC SP12, *Surface Preparation Standards,* Appendix C and D for a description and operation and SSPC SP13, *Surface Preparation of Concrete,* Sections 3.0-6.0). Small areas may be prepared using grinders or sanders as accepted for use during mock-ups. Needle guns may only be used if followed by full abrasive blasting or water jetting to remove weakened/crushed concrete surface layer to sound dense concrete and only when the procedure has been shown to result in a coating adhesion of 200 psi minimum.

4.3.3.2.1 Water used for wet abrasive blasting or high pressure water jetting shall be clean tap or potable water and shall not exhibit any evidence of an oily sheen.

4.3.3.3 In addition, floors may be acid etched using 20% citric acid solution, when accepted by the CONTRACTOR. Acid etched surfaces shall be pH tested in accordance with ASTM D4262, *Standard Test Method for pH of Chemically Cleaned or Etched Concrete Surfaces*, Sections 1.0-8.0. The pH shall be no more than 1.0 pH lower or 2.0 pH higher than the pH of the potable rinse water. A suitable texture shall be achieved that will be agreed upon during the mock-up coating application. A detailed procedure on the use, clean up, and disposal of acid etching materials/rinse must be provided for review and acceptance by the CONTRACTOR.

4.3.4 Carbon Steel Surfaces

4.3.4.1 Prior to blast cleaning, items to be coated shall be visibly dry with the surface temperature of at least 5°F above the dew point. Concrete surfaces shall be determined suitably cured as defined by the CONTRACTOR.

4.3.4.2 Carbon steel surfaces to be coated shall be blast cleaned in accordance with the surface preparation requirements specified in Appendix D. Where abrasive blasting will damage the items or is impractical, SSPC-SP11, *Power Tool Cleaning to Bare Metal* may be substituted only in limited areas and only with CONTRACTOR's written permission to proceed.

4.3.4.3 Abrasive blasting of carbon steel shall result in an angular surface profile 1.5 to 3.0 mils as measured using a Testex Press-O-Film replication tape in accordance with ASTM D4417 Method C, *Standard Test Methods for Field Measurement of Surface Profile of Blast Cleaned Steel.*

4.3.4.4 The recycled abrasive mix shall be maintained clean of contaminants by continuous effective operations of cleaning machine scalping and air wash separators. Reclaimed grit used for abrasive cleaning shall be tested for the presence of oil/grease by immersing a

sample of spent abrasive in clean tap water and checking for oil flotation. Tests shall be performed at the start of blasting, and every 4 hours thereafter. If oil is evident, the contaminated abrasive shall be cleaned or replaced. All surfaces blasted since the last successful test shall be completely cleaned of contamination then re-blasted using clean abrasive. Blast cleaning shall not be performed in the immediate area where coating or curing of coated surfaces is in progress unless a vacuum system is employed that contains dust. All surfaces and equipment, which are not to be coated, shall be suitably protected from blast cleaning.

4.3.4.5 Burrs, slivers, scabs, lamination, weld spatter fins, ridges, and sharp protrusions which become visible after blasting shall be removed. The tools and manner employed to remove defects and sharp edges shall not burnish or destroy the surface profile. If the profile or roughness is reduced, it shall be re-blasted to produce the profile and roughness as required. The exhaust of pneumatic grinders shall not impinge on the cleaned surface. If the surface becomes contaminated, it shall be cleaned of contamination and then re-blasted as required. Carbon steel tools or implements shall not be used on stainless steel surfaces.

4.3.4.6 If visible rust occurs or if the cleaned surface becomes wet or otherwise contaminated, these surfaces shall be re-cleaned to the specified standard. Cleaned surfaces remaining un-coated overnight shall be re-cleaned to the specified cleanliness prior to applying the coating. Where concrete and carbon steel interface are proposed to be coated in one operation, every effort will be made to apply coating to the steel before surface deterioration.

4.3.4.7 After surface preparation is complete and before coating, pressurized air or a vacuum cleaning shall be used to remove all dust and abrasive residue. The air shall be clean and dry as verified in accordance with Section 5.2.1.6, so as not to contaminate the prepared surface. The operator shall ensure that all dust and abrasive residues are removed from the surface of blast profiles when vacuum cleaning is carried out.

4.3.4.8 Machined surfaces shall be protected from damage due to blasting and coating operations.

4.3.4.9 Equipment shall have all openings plugged, masked, and (or) blinded sufficiently to protect internals before abrasive blasting. After the coating operation is complete all internals shall be blown clean and/or vacuumed to remove any dust or abrasive blast media that may have entered the coated equipment.

4.3.5 Galvanized Steel Surfaces

4.3.5.1 Where galvanized steel falls into SC areas and requires a coating, the surface shall be cleaned per SSPC-SP1, *Solvent Cleaning* and allowed to dry. The galvanizing shall then be pretreated using a phosphoric acid solution (e.g., Amchem Galva-Prep) or brush blasted per SSPC-SP7, *Joint Surface Preparation Standard: Brush-Off Blast Cleaning* as recommended by the manufacturer of the coating material intended for use. After flushing the acid off using potable water, the surface area contacted by the acid and the rinse water shall be tested for pH. The pH shall be as indicated in specification Section 4.3.3.3.

4.3.5.2 Damaged galvanized steel shall be cleaned per SSPC-SP11, *Power Tool Cleaning to Bare Metal 1* using a 3M Clean-N-Strip™ disc and wheel, a flapper wheel with a 60-80 grit size or a slow variable speed sander using 60-80 grit sanding disc. All galvanized steel to be coated shall be pretreated as indicated in Section 4.3.5.1 of this specification.

4.4 Coating Application

4.4.1 Prior to applying SPCs, the concrete surface shall be dry as determined by the plastic sheet method in accordance with ASTM D4263, *Standard Test Method for Indicating Moisture in Concrete,* Sections 1.0-8.0.

4.4.2 Coatings shall be applied in accordance with CONTRACTOR accepted procedures (Refer to Section 9.2.1). The coating manufacturer's recommendations for the application temperature and curing temperatures versus times (between coats and after last coat) of the specified material shall be considered when determining minimum and maximum cure to recoat time intervals. Application and curing temperatures above or below the limits allowed by this specification (Refer to Section 4.4.5) shall be submitted to the CONTRACTOR for review and permission to proceed.

4.4.3 Coatings shall be applied using properly sized and type of equipment for the size and complexity of the item being coated. The equipment shall be clean with all components in good working order.

4.4.4 Bug holes, cracks, and construction joints shall be filled flush with the concrete surface plane or as identified in Appendix G, Secondary Containment Installation Details using a structural concrete grout, Five Star® V/O or Five Star® Vertical patch, or CONTRACTOR accepted alternate structural concrete grout or polymeric filler. Structural concrete grout shall be applied prior to applying the first coat or by applying the proprietary polymeric filler listed in Appendix C Table 2 for the selected coating system or CONTRACTOR accepted equal. Proprietary filler materials may be applied before or after the primer sealer coat, where acceptable to the specific coating manufacturer. The filler technique shall be developed during the mock-up to minimize the occurrence of pinholes in the finish coats.

4.4.5 Coatings shall be applied only when the surfaces to be coated are free of curing compound, free of concrete laitance, clean, properly textured, and dry. The substrate temperature shall be a minimum of 5°F above the dew point during coating application and until the applied coating is no longer moisture sensitive per the coating manufacturer's published data or written recommendations. The substrate and air temperature during coating application and curing shall be a minimum of 50°F (inorganic zinc primers 40°F) and a maximum of 110°F. If, during the coating curing phase, the substrate or ambient air temperature falls below the minimum temperature requirement and the coating has not reached the manufacturer's published minimum drying time to recoat time, then the minimum drying time to recoat time shall be extended by the duration of time the temperature was below 50°F (or 40°F), provided the following:

- The coating has not been exposed to precipitation or standing water
- The minimum temperature has not reached 35°F or less
- The extended time does not cause the drying time to recoat time to exceed the manufacturer's published maximum drying time to recoat time

The relative humidity during coating application shall not exceed 85 percent. Measure humidity in accordance with ASTM E337, *Standard Test Method for Measuring Humidity*

with a Psychrometer (Sections 1.0-19.0). Deviations from the above listed minimum and maximum substrate/air temperature and humidity limits may be allowed when in accordance with the coating manufacturer's published data or written recommendations and are accepted by the CONTRACTOR. The one firm limit is that the minimum substrate or air temperature shall not be less than 35°F regardless of the coating manufacturer's published or written recommendations.

4.4.6 The SUBCONTRACTOR shall record all batch numbers for each coating component used along with other information necessary for the CONTRACTOR to relate the batch to the area or item for which it was applied (Refer to Appendix F, Surface Preparation and Coating Inspection Form).

4.4.7 All coatings shall be thoroughly mixed until they are smooth and free from lumps, then strained through a screen of at least 30 mesh. Heavy-bodied materials that will not flow through a 30-mesh screen are exempt from straining. All coatings that could settle in the container during application must be kept under continuous mechanical agitation to ensure coatings expend their solid contents and do not settle during application.

4.4.8 Alternating coats shall have a visible color difference to insure full coverage over previous coats.

4.4.9 Dry film thickness of each coating shall be in accordance with Appendix C, Table 2 or as specified in the subcontract document (Refer to Section 5.2.3.6). The film thickness of concrete primer sealer may be measured using a WFT gage. The primer sealer must be tinted to a color that allows visual verification that it has been applied. At floors, walls, and ceilings that only require a clear sealer, the sealer shall not require tinting.

4.4.10 The minimum and maximum drying times between coats shall be in strict accordance with the coating manufacturer's latest published technical data sheets or written recommendations.

4.4.11 Runs, sags, voids, drips, overspray, loss of adhesion, bubbling, peeling, pinholes, or inadequate cure are not permitted and shall be corrected using CONTRACTOR accepted repair procedures.

4.4.12 Application equipment that will be reused, such as spray equipment, brushes, and rollers, shall be cleaned using the coating manufacturer's recommended solvents/cleaners.

4.5 Remedial Work

4.5.1 The completed coating on each item shall have the correct DFT and shall be free of damage and visible defects.

4.5.2 Repair of Dry Film Thickness Deficiencies

4.5.2.1 Defects such as runs, sags, overspray, and embedded particles shall be corrected by sanding to remove the defect. When defects are noticed in the finish coat, all areas sanded to remove abnormalities must be overcoated per the required dry film thickness in Appendix C Table 2 of this Specification. If the DFT of the primer or intermediate coat is reduced to less than the specified minimum, the area shall be abraded with 60-80 grit sand paper or flapper wheel

and an additional layer of coating shall be applied until sufficient thickness is achieved. If noticed during application, the sags or runs may be brushed out.

4.5.3 Repair of Damage

4.5.3.1 All damaged and loosely adhering coating shall be removed and the surface thoroughly cleaned using a vacu-blaster or high pressure water jetting, 60-80 grit sanding disc, 60-80 grit sandpaper, 60-80 grit flapper wheel, or 3M Clean-N-Strip. Edges of the breaks shall be feathered to insure a smooth transition and the designated number of prime and finish coats shall be applied. Care shall be taken to ensure adjacent coatings are not heat damaged, polished, or burnished.

4.5.4 Loss of adhesion, delamination, blisters, bubbling, and fish eyes in the applied coating requires the affected area of coating to be removed and reapplied in accordance with this specification.

4.5.5 Pinholes shall be filled or otherwise repaired prior to the application of the final coat. Pinhole repairs in the final coat shall blend in and not be visually obvious.

4.5.6 Touch-Up Coating and Sealing of Steel Items Attached by Post-Installed Concrete Anchors

4.5.6.1 Post-installed anchors that attach carbon steel items to concrete surfaces require the mechanical joint formed between the concrete and carbon steel attachment to be sealed. Carbon steel anchors and the anchored carbon steel item shall also receive coating touch-up.

4.5.6.2 Stainless steel post-installed anchors that attach stainless steel items to concrete surfaces require the mechanical joint formed between the concrete and attachment to be sealed. Stainless steel post-installed anchors and stainless steel attachments do not require touch-up coating.

5 Inspections

5.1 Personnel Qualifications

5.1.1 All coating work inspection personnel shall be trained, qualified, and certified in accordance with the SUBCONTRACTOR's accepted procedures. The inspectors shall meet or exceed the minimum requirements for a Level I coatings inspector as described in ASTM D4537, *Standard Guide for Establishing Procedures to Qualify and Certify Personnel Performing Coating and Lining Work Inspection in Nuclear Facilities,* Section 6.0. At least one inspector shall meet the minimum requirements for a Level II Inspector as described in ASTM D4537, Section 1.0-8.0. The SUBCONTRACTOR shall conduct an examination, a performance evaluation, and issue a certification for each inspector in accordance with ASTM D4537, Section 9.0. The Level II inspector shall supervise the work of all Level I inspectors. The SUBCONTRACTOR's inspector must demonstrate his/her capability of using the inspection equipment and performing all the required inspections. The SUBCONTRACTOR's inspector training, qualification, and certification plan and associated procedures shall satisfy the requirements of ASTM D4537, Sections 1.0-8.0 using the guidelines provided in ASTM D5498, *Standard Guide for Developing a Training Program for Personnel Performing*

Coating Work Inspection for Nuclear Facilities including classroom training on the WTP specifications applicable to coating inspection. Additional coating work inspection guidance is found in ASTM D6237, *Standard Guide for Painting Inspectors (Concrete and Masonry Substrates* and ASTM D3276, *Standard Guide for Painting Inspectors (Metal Substrates),* which shall be used in developing procedures for training and certifying coating work inspectors.

5.2 Field Coating Inspection

5.2.1 General

5.2.1.1 The SUBCONTRACTOR shall have the full responsibility for the coating application quality in accordance with this specification and shall be responsible for stopping work activities when conditions develop that could adversely affect the quality of the completed work. All work is subject to the CONTRACTOR's inspection surveillance.

5.2.1.2 The CONTRACTOR's representative shall be the final authority on the specification compliance for surface preparation and material application. Any coating which, in the judgment of the CONTRACTOR's representative, has not been applied in conformance with this specification shall be rejected.

5.2.1.3 The CONTRACTOR's representative shall have access to each part of the process and shall have the right and opportunity to witness any of the quality control tests.

5.2.1.4 The SUBCONTRACTOR shall furnish the necessary testing and inspection instruments, properly calibrated, and certificates maintained. Calibration of testing and inspection instruments shall be traceable to National Institute of Standards and Technology (NIST) or CONTRACTOR authorized alternative standards. If equipment is suspected of being out of calibration, it shall be re-calibrated and certificates made available for verification by the CONTRACTOR. Such equipment shall be available for use by the CONTRACTOR in conducting surveillance of the work.

5.2.1.5 The SUBCONTRACTOR shall halt the coating work and make corrections to the procedures, as necessary to correct repetitive faults found in the work.

5.2.1.6 Prior to using compressed air, the quality of the air downstream of the separator shall be tested in accordance with the requirements of ASTM D4285, *Standard Test Method for Indicating Oil or Water in Compressed Air* by blowing the air onto a clean white blotter or cloth for two (2) minutes at a distance of no more than 12 inches to check for any contamination, oil, or moisture. This test shall be performed at the start of work and at not more than 4 hour intervals. The test shall also be made after any interruption of the air compressor operation or as required by the CONTRACTOR. The air shall be used only if the test indicates no visible contamination, oil, or moisture. If contaminants are evident, the equipment deficiencies shall be corrected and the air stream shall be re-tested. Moisture separators shall be bled continuously. All lines shall be tested individually prior to use. Surfaces determined to have been blown down or blasted with contaminated air shall be cleaned of all contamination then re-blasted with clean air and abrasive. Coatings determined to have been applied using contaminated air shall be removed and reapplied using clean air.

5.2.1.7 Inspection points shall be established as follows:

- Prior to the start of work
- Immediately following the surface preparation
- Immediately prior to the coating application
- Following the application of each coat
- Following the curing of the coating
- Final inspection and sign-off in accordance with the Project requirements

5.2.1.8 Any defects disclosed by inspection shall be re-inspected after correction.

5.2.1.9 The SUBCONTRACTOR shall keep the records indicated below, and submit these records to the CONTRACTOR (refer to Section 9.2.4 and Appendix F). The following table lists the frequencies:

Coating/Inspection Step		**Required Frequency**
1.	Pre-surface prep surface preparation profile	100% visual on pre-surface 100% on surface prep/cleanliness Profile first item of each type per shift and every 20 items thereafter or other frequency as CONTRACTOR accepted in SUBCONTRACTOR's procedures.
2.	Environmental/air quality	At the start of each work day and every 4 hours thereafter, or more often during changing conditions.
3.	Recirculated abrasive	At the start of work and every 4 hours thereafter.
4.	Thickness per SSPC-PA2, *Measurement of Dry Paint Thickness with Magnetic Gauges*	On large items, 5 spot measurements per 100 ft^2. On items < 100 ft^2, 4 spot measurement On items less than 4 inch (valves, fittings, components, etc.), 2 spot measurements For repair spots < 6 in^2 and > 1 in^2, 2 spot measurements For repair spots < 1 in^2, 1 spot measurement For small chips/nicks/scratches and pinhole size repair spots, visual only. For complex surfaces such as structural steel (steel beams), the frequency of DFT measurements shall be in accordance with SSPC-PA2, Appendix 3, Section A3.4.1 excluding any measurements on the flange toes. In accordance with Figure A.3, *The Surface of a Steel Beam*, the following locations are acceptable for the test measurements: 1, 3, 4, 5, 7, 9, 10, and 11. The following locations are excluded from test measurements: 2, 6, 8, and 12. For beams less than 20ft-0 inch, 2 sets of 8 spot measurements shall be taken. For beams 20ft-0 inch thru 60 ft-0 inch 3 sets of 8 spot measurements shall be taken.
5.	Visual on Applied Coating	100% of all items

5.2.1.10 Appendix F is an example for a Surface Preparation and Coating Inspection Form. This form, or a form that contains the same information, is required for daily inspection documentation.

5.2.2 Surface Preparation Inspections

5.2.2.1 Verify bug holes, voids, cracks, and construction joints are properly filled. This is not necessary if filler is applied after surface preparation and sealer coat application.

5.2.2.2 Verify environmental conditions and compressed air quality (Refer to Section 4.3.2, 4.3.4.4, and 5.2.1.6).

5.2.2.3 Verify recycled abrasive is grease and oil free (Refer to Section 4.3.4.4).

5.2.2.4 Verify surface cleanliness and texture (Refer to Sections 4.3.3.1, 4.3.3.2, 4.3.4.2, and 4.3.4.3).

5.2.2.5 Grease-free chalk shall be used to mark local areas that do not meet the specified requirements (e.g., soapstone and crayons are not acceptable).

5.2.3 Coating Application Inspections

5.2.3.1 Environmental conditions and compressed air quality shall be verified per Sections 4.3.4.1, 4.3.2, 4.4.5, and 5.2.1.9.

5.2.3.2 Dry film thickness on steel items shall be measured with a magnetic film thickness gage such as an Elektro-Physik "Mikrotest" or Positector 2000, 6000, or CONTRACTOR accepted equal in accordance with SSPC-PA2, *Measurement of Dry Paint Thickness with Magnetic Gauges*. Steel items and individual items on equipment less than one hundred (100) ft^2 in surface area shall have at least 4 evenly spaced spot readings per item. Equipment or equipment components less than 4 inches in its largest dimension only require 2 evenly spaced spot reading per item.

5.2.3.3 Coating thickness on concrete shall be measured during application using a wet film thickness (WFT) gage (Refer to ASTM D4414, *Standard Practice for Measurement of Wet Film Thickness,* Sections 1.0-10.0 applicable to procedure A). Dry film thickness (DFT) shall be calculated from WFT and coating material volume solids, or by using a nondestructive ultrasonic tester such as the Positector 100 or accepted equivalent (Refer to ASTM D6132, *Standard Test Method for Nondestructive Measurement of Dry Film Thickness of Applied Organic Coatings Using an Ultrasonic Coating Thickness Gage,* Sections 1.0-11.0). Each 100 ft^2 shall receive 5 evenly spaced gage readings. Areas less than 100 ft^2 in surface area shall have at least 2 evenly spaced spot readings per area.

5.2.3.4 Wet film thickness gages shall be of high-quality steel or stainless steel, with a maximum blade width of 1.5 inches such as Nordson Model 790 or CONTRACTOR accepted alternate. Prior to initial use, and annually thereafter, an accuracy check shall be made using a measuring device traceable to NIST. Accuracy shall be ±0.00015" for the 1-4 mil range, ±0.00025" for the 5-15 mil range, and ±0.0005" for the 15-60 mil range. Additionally wet film thickness gages shall be visually inspected for paint residue and physical damage (bending, cracking, wear, etc.) at the start of work and every 4 hours thereafter during use.

Paint residue shall be removed and gages exhibiting physical damage shall be declared unusable.

5.2.3.5 The DFT gage shall have a minimum of a zero to 40 mil or zero to 60 mil working range and shall be checked for calibration accuracy in accordance with SSPC-PA2, *Measurement of Dry Paint Thickness with Magnetic Gauges* at the start of each shift against certified coating thickness calibration standards for non-magnetic coating of steel traceable to NIST or CONTRACTOR's accepted alternative standards. The calibration standards shall be in the 1.5 mil to 40.0 mil range, unless otherwise specified. Any surface with a measured thickness outside of the limits described in Section 4.4.9 shall be rejected. These areas shall be reworked or re-cleaned prior to acceptance by the CONTRACTOR.

5.2.3.6 When DFT becomes debatable or indeterminate, the CONTRACTOR reserves the right to require the use of destructive testing using a Tooke gage in accordance with ASTM D4138, *Standard Practices for Measurement of Dry Film Thickness of Protective Coating Systems by Destructive, Cross-Sectioning Means,* Sections 1.0-9.0 or by nondestructive ultrasonic testing in accordance with ASTM D6132, *Standard Test Method for Nondestructive Measurement of Dry Film Thickness of Applied Organic Coatings Using an Ultrasonic Coating Thickness Gage*,Sections 1.0-11.0 to verify DFT. All areas damaged by destructive testing shall be repaired by the SUBCONTRACTOR.

5.2.3.7 Runs, sags, voids, drips, overspray, loss of adhesion, bubbling, pinholes, peeling, or inadequate cure are not permitted and shall be repaired or reworked.

6 Storage, Handling, and Shipping

6.1 Coating Materials

6.1.1 Coating materials shall not be stored in direct sunlight or exposed to inclement weather (e.g., rain, snow, sleet, freezing rain, dew point condensation, see also Section 6.1.6). Materials shall remain under cover until ready to use.

6.1.2 Coatings, thinners, cleaning solvents, and other flammable materials stored at any location shall be kept away from combustion sources and shall be stored in metal flammable material storage cabinets meeting NFPA and OSHA standards. Thinners and solvents shall be transported to the point of use in approved safety containers meeting OSHA standards.

6.1.3 Coating material shall be delivered in manufacturer's original unopened containers. Each container shall be clearly identified with the manufacturer's name, product designation, batch number, date of manufacture, and shelf life expiration date.

6.1.4 Coating materials shall have a minimum of 120 days of its shelf life remaining at the time the shipment arrives at the Project site or the SUBCONTRACTOR's warehouse.

6.1.5 The maximum shelf life allowed for coating/sealant materials used on the WTP project is as defined by the manufacturer's technical data sheet and determined from the date of their manufacture. Coating/sealant materials which have exceeded their shelf life shall not be used and shall be placed on HOLD and segregated from other coating materials.

6.1.5.1 A shelf life extension of no less than three (3) months and no more than six (6) months may be issued by the coating/sealant manufacturer. The shelf life extension shall be based on laboratory testing of retained samples taken at the time of manufacture or by testing a sample provided from the actual coating/sealant material in question. Where testing verified an outdated coating/sealant material still complies with its original design criteria, it is acceptable for shelf life extension.

6.1.5.2 A new Coating Manufacturer's Product Identity Certification Record (Appendix E) shall be provided by the coating/sealant manufacturer that includes the test results and specifically indicates it was provided to document shelf life extension including new expiration date. Upon receipt of the Appendix E form, materials shall be removed from HOLD and returned to active storage. Coating/sealant containers shall be marked with new expiration date by permanent marker

6.1.5.3 Coating materials that have not been stored or handled in accordance with Sections 6.1.1, 6.1.6, 6.1.7, and 6.1.8, may not have their shelf life extended.

6.1.6 Coating material shall be protected from moisture, direct sunlight, and temperatures below 40°F or above 100°F, unless otherwise allowed by the coating manufacturer's latest published instructions and accepted by the CONTRACTOR.

6.1.7 Coating material containers, where the airtight seal has been broken or any of the contents are lost, shall not be used.

6.1.8 Coating material containers shall not be opened except for immediate use.

6.1.9 Unused material shall be returned to storage as soon as possible at the end of each workday. Materials left out for more than 10 hours in an uncontrolled storage area (areas without environmental controls or environmental monitoring that are exposed to ambient weather) shall not be used and shall be placed in a segregated hold area until final disposition, then removed from the job site if rejected. No waterborne coatings shall be stored in areas where the temperatures are below 40°F.

6.1.10 All required coating material certifications for each batch of material delivered to the job site shall be available at the time of material receipt. Materials delivered to the shop or field without the required documentation shall not be used and the SUBCONTRACTOR shall tag and place discrepant materials into a hold area clearly separated from acceptable material. Once the required documentation is received or otherwise corrected and found to be acceptable, the discrepant material may then be taken off hold status and used.

6.1.11 All coating/sealant materials shall be stored on-site in accordance with 24590-WTP-GPP-SIND-026 *Fire Prevention and Protection.*

6.2 Batch Information

6.2.1 Each container of coating material received and used by the SUBCONTRACTOR shall be marked with the following:

- The manufacturer's name
- The product designation

- Batch/lot number
- Location and date of manufacture
- The shelf life and (or) expiration date

6.2.2 Appendix E is an example of the Coating Manufacturer's Product Identity Certification Record. This document is required from the coating manufacturer for each batch of product (i.e., manufactured coating material, not individual ingredients).

7 Quality Assurance

7.1 General

7.1.1 The SUBCONTRACTOR shall control the quality of items and services to meet the requirements of this specification, applicable codes and standards referenced herein, and associated subcontract documents. The SUBCONTRACTOR shall prepare and maintain documentation to provide evidence of compliance with CONTRACTOR accepted procedures and this specification. A copy of the coating inspection documentation shall be included in the shipping documentation.

7.1.2 The SUBCONTRACTOR, including any lower-tier organizations, shall be subject to surveillance inspection by the CONTRACTOR's representative until completion or termination of the subcontract. This surveillance inspection does not relieve the SUBCONTRACTOR from the responsibility for conformance to the requirements of procurement documents, this specification and CONTRACTOR accepted procedures.

7.1.3 The SUBCONTRACTOR shall maintain a quality assurance plan (QAP) for items located in non-ALARA and ALARA areas, as defined in Section 1.4, which addresses as a minimum, the elements and implementing procedures called for in the Supplier Quality Assurance Program Data Sheet (example shown in Appendix A).

7.1.4 Quality Assurance Plan

7.1.4.1 A written QAP must be developed, implemented, and maintained.

7.1.4.2 The QAP must describe the organizational structure, functional responsibilities, levels of authority, and interfaces for those managing, performing, and assessing the work.

7.1.4.3 The QAP must describe management processes, including planning, scheduling, and resource considerations.

7.1.5 Personnel Training and Qualification

7.1.5.1 Personnel must be trained and qualified to ensure they are capable of performing their assigned work.

7.1.5.2 Personnel must be provided continuing training to ensure that job proficiency is maintained.

7.1.6 Quality Improvement

7.1.6.1 Processes to detect and prevent quality problems must be established and implemented.

7.1.6.2 Items, services, and processes that do not meet established requirements must be identified, controlled, and corrected.

7.1.6.3 Correction must include identifying the causes of problems and working to prevent recurrence.

7.1.6.4 Item characteristics, process implementation, and other quality-related information must be reviewed and the data analyzed to identify items, services, and processes needing improvement.

7.1.7 Documents and Records

7.1.7.1 Documents must be prepared, reviewed, approved, issued, used, and revised to prescribe processes, specify requirements, or establish design.

7.1.7.2 Records must be specified, prepared, reviewed, approved, and maintained.

7.1.8 Work Processes

7.1.8.1 Work must be performed to established technical standards and administrative controls using approved instructions, procedures, or other appropriate means.

7.1.8.2 Items must be identified and controlled to ensure their proper use.

7.1.8.3 Items must be maintained to prevent their damage, loss, or deterioration.

7.1.8.4 Equipment used for process monitoring or data collection must be calibrated and maintained.

7.1.9 Design

7.1.9.1 N/A

7.1.10 Procurement

7.1.10.1 Procured items and services must meet established requirements and perform as specified.

7.1.10.2 Prospective suppliers must be evaluated and selected on the basis of specified criteria.

7.1.10.3 Processes to ensure that approved suppliers continue to provide acceptable items and services must be established and implemented.

7.1.11 Inspection and Acceptance Testing

7.1.11.1 Inspection and testing of specified items, services, and processes must be conducted using established acceptance and performance criteria.

7.1.11.2 Equipment used for inspections and tests must be calibrated and maintained.

7.1.12 Management Assessment

7.1.12.1 N/A

7.1.13 Independent Assessment

7.1.13.1 N/A

7.1.14 Inspection Points

7.1.14.1 The SUBCONTRACTOR shall provide the CONTRACTOR's representative with a work activity schedule and shall notify the CONTRACTOR of all required inspection points prior to the scheduled date for coating activities (Refer to Section 1.3.10 and 1.3.11 herein).

7.1.15 Work Plans and Procedures

7.1.15.1 If the SUBCONTRACTOR's proposed work plan or procedures differ from the requirements of this specification, the SUBCONTRACTOR shall specifically identify and explain all differences in writing, using a supplier deviation disposition request (SDDR) or other appropriate WTP Project document, and submitted to the CONTRACTOR for review and approval prior to proceeding with a known deviation after the fact.

7.1.16 Witness and Hold Points

7.1.16.1 All pre-established witness and hold points shall be witnessed by the CONTRACTOR unless a written waiver has been issued.

7.1.17 Training

7.1.17.1 Coating application personnel performing surface preparation and coating application shall be trained in the specific Project coating requirements and the associated CONTRACTOR accepted work procedures that are relevant to their individual work assignments.

7.1.17.2 Painter/coating application personnel used to prepare the surface and apply coatings shall be trained, qualified, and certified in accordance with the SUBCONTRACTOR's procedures accepted by the CONTRACTOR.

7.1.17.3 The SUBCONTRACTOR's coating work inspectors shall have previous experience in coating inspection and shall receive documented training in the specific Project coating requirements, ASTM standards, and other relevant standards including the CONTRACTOR accepted work procedures. All coating inspectors shall be trained, qualified, and certified Level I inspectors meeting the requirements of Section 5.1.1. Inspector training, qualification, and certification shall also comply with the SUBCONTRACTOR's document(s) identified on the submitted Supplier Quality Assurance (QA) Program Data Sheet (Appendix A).

8 Configuration Management

8.1 Design Changes Incorporated by Reference

The following is a listing of design changes that are identified by reference and do not require modification to the specification:

Design Change Documents
(None at this time)

* Denotes a new entry for this revision of the specification

9 Documentation and Submittals

9.1 Documentation

9.1.1 The SUBCONTRACTOR shall provide a record of all materials used (regarding individual batch numbers, refer to Coating Manufacturer's Product Identity Certification Record, Appendix E).

9.1.2 The SUBCONTRACTOR shall provide a record of all required daily inspections (Example-Appendix F) that includes pre-surface preparation, compressed air cleanliness, environmental conditions, surface preparation and roughness, location of field repairs coated, application, visual inspection, DFT, and all touch-up/repair. This record shall include the coating and thinner materials used and the ID of the items coated to provide traceability.

9.1.3 All daily inspection reports shall be available for review by the CONTRACTOR representative within 24 hours from the time the documented work is performed.

9.1.4 SUBCONTRACTOR documentation forms or the way that the actual work will be documented shall be provided by the SUBCONTRACTOR as part of the procedures submittal for review by the CONTRACTOR.

9.2 Submittals

9.2.1 SUBCONTRACTOR shall submit detailed written procedures for the following:

- Material receiving, marking, storage, handling
- Surface preparation
- Application
- Curing
- Inspection and testing
- Touch-up and repair
- Application personnel qualification and inspector qualification (G321-E, category 28.0)

- Proposed documentation forms. The final procedure and documentation forms shall be submitted for the CONTRACTOR's approval (G321-E, Category 15.0)

(The above items can be grouped into a common procedure where appropriate)

9.2.2 Materials shall be used only if they are prequalified in accordance with Appendix B and if the SUBCONTRACTOR provides a current Coating Manufacturer's Product Identity Certification Record (Appendix E). Coating material prequalification testing is only required of the coating manufacturer and not the SPC application SUBCONTRACTOR.

9.2.3 The SUBCONTRACTOR shall identify the specific products by manufacturer and catalog number and shall submit the coating manufacturer's latest published product data sheet application instructions and SDS. Conflicts, if any, between the SUBCONTRACTOR's procedures, the coating manufacturer's recommendations, and this specification shall be referred to the CONTRACTOR for resolution and written permission to proceed (G321-E, category 11.0). The SUBCONTRACTOR shall submit original Coating Manufacturer's Product Identity Certification Records for each and every batch of coating material purchased for use on the WTP Project (Refer to Appendix E, Coating Manufacturer's Product Identity Certification Record; refer to G321-V, category 13.0).

9.2.4 The SUBCONTRACTOR shall complete and submit a daily inspection record as a part of the work procedures that includes all elements provided in Appendix F as a minimum. An entry for wet bulb is not required when the accepted device used to measure humidity and dew point does not require a wet bulb (Refer to Section 8.1.9 and 10.2; refer to G321-V, category 13.1).

9.2.5 The SUBCONTRACTOR shall submit a Supplier Quality Assurance Program Data Sheet (Appendix A) appropriate for the activity being performed (e.g., manufacture of SPCs or application of specified SPCs), along with coating procedures. The SUBCONTRACTOR shall identify their Quality Assurance (QA) Plan documents and paragraph references on the QA Program Data Sheet. All required QA Plan elements and corresponding SUBCONTRACTOR's identified documents are subject to CONTRACTOR's evaluation and verification.

9.2.6 The SUBCONTRACTOR shall provide a personnel training and certification plan for applicators and inspectors (Refer to Sections, 7.1.5.1, 7.1.5.2, 5.1.1, 4.1.2 and Appendix A).

9.2.7 The SUBCONTRACTOR shall supply with their coating procedures a list of previous Project case histories, where they applied coating materials similar to the materials specified herein. This list shall include the type of item coated, the project name, a project client contact name and phone number, if possible, for verification.

9.2.8 Color samples shall be submitted prior to the start of work. Colors shall be as defined in Appendix D or as otherwise defined by the CONTRACTOR. Color samples sizes shall be 1' x 1'. At least five sets of all colors shall be submitted. The type of panel used and the coating material used for the color samples shall be as agreed upon with the CONTRACTOR.

Appendix A
Supplier Quality Assurance Program Requirements Data Sheet

DOE ORDER 414.1C REQUIREMENTS

The following marked QA Program Elements of DOE ORDER 414.1C apply and are subject to CONTRACTOR evaluation and verification (see also exhibit J in subcontract documents)

DOE O 414.1A	N/A	PROGRAM ELEMENTS	SUPPLIER DOCUMENT AND PARAGRAPH REFERENCES TO BE COMPLETED BY THE SUPPLIER
☐	☐	PROGRAM	
☐	☐	PERSONNEL TRAINING & QUALIFICATION	
☐	☐	QUALITY IMPROVEMENT	
☐	☐	DOCUMENTS & RECORDS	
☐	☐	WORK PROCESSES	
☐	☐	DESIGN	Coating manufacturers and coating applicators "Design" for Special Protective Coatings provided by 24590-WTP-3PS-AFPS-T0006
☐	☐	PROCUREMENT	
☐	☐	INSPECTION & ACCEPTANCE TESTING	
☐	☐	MANAGEMENT ASSESSMENT	
☐	☐	INDEPENDENT ASSESSMENT	

SIGNATURE OF SUPPLIER REPRESENTATIVE _____

0		Issue for Use				
REV.	DATE	REASON FOR REVISION	BY	CHECKED	APPROVED	QA
Special Protective Coatings For Secondary Containment Areas.			JOB NO. 24590-101			
			DATA SHEET NO.			
			REV. 0			

Appendix B
WTP Project Special Protective Coating (SPC) Material Prequalification Requirements for Secondary Containment

1.0 Prequalification Testing for ALARA Zones/Areas

1.1 All coating material prequalification testing shall be performed by the coating manufacturers listed in Appendix C.

1.2 Coating systems that will be applied on items that will be located inside ALARA Zones/Areas shall satisfy the following test requirements:

1.2.1 Radiation tolerance testing: Coating systems shall be tested for tolerance to radiation exposure as a complete system in accordance with the requirements of ASTM D4082, *Standard Test Method for Effects of Gamma Radiation on Coatings for Use in Nuclear Power Plants* and as follows:

1.2.1.1 For coating systems to be used in areas where the total anticipated accumulated dose will not exceed 2E8 rads, no radiation tolerance testing is required.

1.2.1.2 For coating systems to be used in areas where the total anticipated accumulated dose is >2E8 rads up to 1E9 rads, test the coatings at 1E9 rads.

1.2.1.3 For coating systems to be used in areas where the total anticipated accumulated dose is >1E9 rads, the test radiation level shall equal or exceed the highest anticipated accumulated dose.

1.2.1.4 The acceptance criteria for the irradiation test shall be "no defects" as described in ASTM D4082. In addition to the defects stated in ASTM D4082, also check the coating on the test specimens for softening. The coating shall not soften because of the radiation exposure.

1.2.2 Decontamination testing: Generic SPC materials such as two component or three component Epoxy and Epoxy Novolac types have historically shown very good decontamination and chemical resistance properties and are suitable for use on the WTP project. Other generic coating materials located in areas that will require operational decontamination must be able to withstand the decontamination chemicals and temperatures that will be used as part of the decontamination process.

1.2.3 Abrasion resistance testing: In addition to radiation tolerance testing of coating systems that will be applied to surfaces inside ALARA Zones/Areas or on items that will be located inside ALARA Zones/Areas, those coating systems and selected Non-ALARA Zone/Area coating systems shall satisfy the following test requirements:

1.2.3.1 Coating systems for use in SC areas where abrasion will be a factor in the in-service performance of the coating system, shall be tested in accordance with ASTM D4060. The weight loss shall not exceed 175 mg per 1000 cycles when a CS-17 wheel is used with a 1000-g load.

1.2.4 Adhesion testing: Coating systems shall be tested for adhesion in accordance with the requirements of ASTM D4541 and ASTM D5144 Section 5.5.1. The minimum adhesion value shall be 200 psi for coatings applied to concrete or steel substrates.

1.2.5 Chemical resistance testing: Perform chemical resistance testing on coating systems identified for use in chemical exposure areas in accordance with the requirements of ASTM D3912 Section 6.3. The test reagents and test duration shall be governed by the anticipated service conditions. The test shall last for 5 days for SC coating systems and for coating systems where cleanup of spills will not be immediate, for 24 hours for coating systems subject to splash and spillage where cleanup will be immediate, and for 8 hours for coating systems subjected to decontamination only.

1.2.5.1 If the test duration exceeds 24 hours, examine the test specimens after each 24-hour period and report the condition of the specimens after each 24-hour interval. Examine and report the condition of the specimens in accordance with the requirements of ASTM D3912, Sections 7 and 8. The test reagents and concentrations shall be as follows:

1.2.5.1.1 Chemical Reagents and Concentrations that may require testing:

- 2.0, 5.0, and 12.2 Molar HNO_3
- 0.25, 2.0, 5.0, and 19.0 Molar NaOH
- 3.27 Molar $Sr(NO_3)_2$
- 7.4 Molar $NaNO_2$
- 4.4 Molar $NaMnO_4$

1.2.6 Test specimen preparation: Test specimens shall be prepared in accordance with the requirements of ASTM D5139, *Standard Specification for Sample Preparation for Qualification Testing of Coatings Used in Nuclear Power Plants*. The surface preparation methods utilized for radiation tolerance, adhesion, and chemical resistance testing shall be representative of those proposed for use. If more than one surface preparation method is proposed for use, each proposed surface preparation method shall be tested independently. The size of the test specimens shall be appropriate for the test being carried out. The minimum size of test specimens shall be 2" x 4" x 1/4" for steel substrates and 2" x 2" x 4" for concrete substrates.

1.2.7 Infrared (IR) scan: The coating manufacturer shall run an IR scan of the prequalification batch of each component of each coating system to maintain as a record of that formulation. The IR scans shall be maintained indefinitely for all coating systems that are accepted for use by WTP and shall be identified and submitted with the test documentation for each coating system. Thereafter, the manufacturer shall certify that each subsequent batch of an accepted coating system was manufactured with the same formulation, raw materials, production methods, and quality control standards as the coating materials originally tested and accepted for use by the WTP (refer to the statement included on the Coating Manufacturer's Product Identity Certification Record in Appendix E).

1.2.8 Flame spread and smoke developed: All SPCs that will be applied on the building structure (e.g., concrete walls, floors, ceilings, structural steel) located in the LAW, HLW, PT Facility , Lab, EMF and areas of BOF that transport, process or store radioactive materials or items shall comply with the requirements of NFPA 801, DOE Standard 1066, NFPA 255 and NFPA 253 as defined in specification 24590-WTP-3PS-AFPS-T0002 Special Protective Coating Limited-Combustible Testing Protocol. Concrete floors are required to have a minimum Critical Radiant

Flux rating of 0.45 watts/cm^2. The maximum allowable flame spread for the building structure walls and ceilings is 25 and the maximum allowable smoke developed is 50. Concrete floors, equipment, piping, steel items installed in the building do not require flame spread and smoke developed testing.

1.2.9 Volatile organic compounds (VOC): The VOC content of all SPCs shall not exceed 3.8 lbs/gal (450 g/L). If the VOC requirement in the location where the coating is being applied is less than the 3.8 lbs/gal, the local requirements take precedence and must be met.

1.2.10 Prequalification Testing for Flexible Epoxy Filler Material Acting as a Water Stop

1.2.10.1 Permeability testing of flexible epoxy filler material shall be performed in accordance with ASTM D1653, *Standard Test Methods for Water Vapor Transmission for Organic Coating Films* Method B. Permeability shall be similar to epoxy coating materials.

1.2.10.2 Radiation tolerance testing of flexible epoxy filler material shall be performed per ASTM D4082 when installed in areas where the 40-year integrated dose exposure is expected to be greater than 2E8 rads. The flexible epoxy filler shall exhibit residual flexibility and remain bonded to the substrate.

1.2.10.3 Elongation of the flexible epoxy filler material shall be at least 50% when tested in accordance with ASTM D412.

1.2.10.4 Abrasion resistance testing of flexible epoxy filler material per ASTM D4060 is not required.

1.2.10.5 Adhesion testing of the flexible epoxy filler material to concrete shall be performed in accordance with ASTM D4541 and ASTM D5144. The adhesion shall be 200 psi minimum.

1.2.10.6 Chemical resistance testing of the flexible epoxy filler material shall be performed per Section 1.2.5 above. The testing results shall be reported.

1.2.10.7 Aging shall be demonstrated by at least 10 years of successful field service in SC applications or other similar application. Accelerated aging testing may also be used such as radiation tolerance testing at 2E8 rads minimum (see Section 1.2.1 above).

1.2.10.8 Crack-filling – Due to the thick viscous nature of the flexible epoxy filler material, it is only required to be mechanically forced into the cracks, primarily bridging over the cracks creating a thick well-bonded protective barrier.

2.0 Prequalification Testing for Non-ALARA Zones/Areas

Special protective coating materials or systems that will be applied on items that will be located in non-ALARA zones/areas have the same prequalification requirements as listed in Appendix B, Section 1.0 except no radiation tolerance testing is required.

Appendix C Table 1 – Secondary Containment Coating Systems

Usage Type	Thickness Groups Concrete/ Steel	Resin Type/ Surface Type	Coating System Description	Prequalified Coating Systems						
				Ameron	Carboline	ICI-Devoe	Dudick	Inter-National	Sherwin Williams	Remarks
FLOOR COATING SYSTEMS										
SC	T4	ECF	Heavy Spray or Self Leveling Epoxy Floor Coatings (Epoxy primer and one coat of epoxy finish)	AM07	CA07	DE07	DD07	IN07	SW07	When the room finish schedule specifies system designation SC-E it includes this concrete floor coating system.
SC	T4	NCF	Heavy Spray or Self Leveling Epoxy Novolac Floor Coatings (Epoxy Novolac primer and one coat of epoxy Novolac finish)	AM08	CA08	DE08	DD08	(none)	SW08	When the room finish schedule specifies system designation SC-N it includes this concrete floor coating system.
WALL and SUMP COATING SYSTEMS										
SC	T2	ECW	Epoxy Wall & Sump Coatings (Fill bug holes flush, apply 1 coat of epoxy primer and two coats of epoxy finish)	AM15	CA15	(none)	(none)	IN15	SW15	When the room finish schedule specifies system designation SC-E it includes this concrete wall coating system.
SC	T2	NCW	Epoxy Novolac Wall & Sump Coatings (Fill bug holes flush, apply 1 coat of epoxy Novolac primer and two coats of epoxy Novolac finish)	AM16	CA16	(none)	(none)	IN16	SW16	When the room finish schedule specifies system designation SC-N it includes this concrete wall coating system.
STEEL EMBED COATING SYSTEMS										
SC	T4	ESE	Epoxy Coatings for Embed Plates and Support Steel, (Touch up existing shop coating or abrasive blast and apply two coats of Epoxy Finish)	AM19	CA19	(none)	(none)	IN19	SW19	When the room finish schedule specifies system designation SC-E it includes this steel coating system.
SC	T5	NSE	Epoxy Novolac Coatings for, Embed Plates and Support Steel (Touch up existing shop coating or abrasive blast and then apply two coats of Epoxy Novolac Finish)	AM20	CA20	(none)	(none)	IN20	SW20	When the room finish schedule specifies system designation SC-N it includes this steel coating system.
OUTDOOR SECANDORY CONTAINMENT COATING SYSTEM										
SC	T5	P	Coating system for outdoor secondary containment areas; concrete and steel	(none)	(none)	(none)	(none)	(none)	SW30	100% solids Polyurea coating

SC = Secondary Containment, ECF = Epoxy Concrete Floors; NCF = Epoxy Novolac Concrete Floors; ECW = Epoxy Concrete Walls; NCW = Epoxy Novolac Concrete Walls

ESE = Epoxy Steel Embeds; NSE = Epoxy Novolac Steel Embeds

Appendix C
Table 2 – Secondary Containment Prequalified Coating Materials

WTP Concrete System Code	Surface Type	Appendix C Table 1 Mfg. System Code	Coating Mfg.	Concrete Filler (flush)	Mfg. Products	Required Dry Film Thickness (Mils) **
SC-T4-ECF	Concrete Floors	AM07	Ameron	None	X00701 / Nu Klad 120A	1-2 / 40-60 = 41-62 mils
SC-T4-ECF	Concrete Floors	CA07	Carboline	None	Semstone 5401 / Semstone 140SL+SAND / 140SL	4-6 / 10-15 / 30-50 =44-71 mils
SC-T4-ECF	Concrete Floors	DE07	Devoe	Futura- Bond 320 Gel	Pre Prime 167/ Devmat 111	1-2 / 40-60 = 41-62 mils
SC-T4-ECF	Concrete Floors	DU07	Dudick	None	Primer 67 / Polymer Alloy 2500 FR	4-6 / 40-60 = 44-66 mils
SC-T4-ECF	Concrete Floors	IN07	International	Intercryl 320	Interseal 670HS / Interzone 954	2-4 / 45-55 = 47-59 mils
SC-T4-ECF	Concrete Floors	SW07	Sherwin Williams	Kem Cati-Cote HS or Steel-Seam FT910	Macropoxy 920 / Cor-Cote HP SL Mortar	1.5-2 / 38.5-58 = 40-60 mils
SC-T4-NCF	Concrete Floors	AM08	Ameron	None	X00701 / Nu Klad 120A / Amercoat 91	1-2 / 34-50 / 6-10 = 41-62 mils
SC-T4-NCF	Concrete Floors	CA08	Carboline	None	Semstone 5401 / 145SL+SAND / 145SL.	4-6 / 40-60 = 44-66 mils
SC-T4-NCF	Concrete Floors	DE08	Devoe	Futura- Bond 320 Gel	Pre Prime 167/ Devmat 111	1-1.5 / 40-60 = 41-61.5 mils
SC-T4-NCF	Concrete Floors	DU08	Dudick	None	Primer 67 / Polymer Alloy 2100 FR	4-6 / 40-60 = 44-66 mils
SC-T4-NCF	Concrete Floors	SW08	Sherwin Williams	Kem Cati-Cote HS or Steel-Seam FT910	Cor Cote HCR / Cor Cote HCR SL Mortar.	4-6 / 36-54 = 40-60 mils
SC-T2-ECW	Concrete Walls	AM15	Ameron	Nuclad 114A	Amerlock 400 / Amerlock 400	4-8 / 4-8=8-16 mils
SC-T2-ECW	Concrete Walls	CA15	Carboline	Semstone 195	Carbogard 1340 / Carbog890C705 / C890S800	1-2 / 4-5 / 4-5=10-14 mils
SC-T2-ECW	Concrete Walls	IN15	International	Intercyrl 320	Intergard 345 / 345 / 345	4-6 / 4-6 / 4-6=12-18 mils

WTP Concrete System Code	Surface Type	Appendix C Table 1 Mfg. System Code	Coating Mfg.	Concrete Filler (flush)	Mfg. Products	Required Dry Film Thickness (Mils) **
SC-T2-ECW	Concrete Walls	SW15	Sherwin Williams	Kem Cati-Cote HS or Steel-Seam FT910	Macropoxy 920 / Macropoxy 646 / Macropoxy 646	1-2 / 3-7 / 4 -7=8-16 mils
SC-T2-NCW	Concrete Walls	AM16	Ameron	Nu Klad 114A	Amercoat 91 / Amercoat 91	4-8 / 4-8=8-16 mils
SC-T2-NCW	Concrete Walls	CA16	Carboline	Semstone 195	Carbogard 1340 / Phenoline1205FR0700 / 1205FRS800	1-2 / 5-6 / 5-6=12-16 mils
SC-T2-NCW	Concrete Walls	IN16	International	Intercyrl 320	Intertherm 228 / 228 / 228	2-4 / 4-6 / 4-6=10-16 mils
SC-T2-NCW	Concrete Walls	SW16	Sherwin Williams	Kem Cati-Cote HS or Steel-Seam FT910	Macropoxy 920 / Phenicon HS / Phenicon HS /	1.5-2.0 / 3-7 / 4-7=8.5-16 mils

WTP Steel System Code	Surface Type	Appendix C Mfg. System Code	Coating Mfg.	Steel Primer	Mfg. Products	Required Dry Film Thickness (Mils) **
SC-T4-ESE	Steel Embeds	CA19	Carboline	*Carbozinc 859	Carbogard 890 / 890	3-5 / 4-6 / 4-6 = 11-17 mils
SC-T4-ESE	Steel Embeds	IN19	International	*Interzinc 52	Intergard 475HS / 475HS	3-5 / 4-6 / 4-6 = 11-17 mils
SC-T4-ESE	Steel Embeds	SW19	Sherwin Williams	*Zinc Clad IV	Macropoxy 646 / 646	3-5 / 4-6 / 4-6 = 11-17 mils
SC-T4-ESE*	Steel Embeds	AM19	Ameron	*Amercoat 68HS	Amerlock 385 / 385	3-5 / 4-6 / 4-6 = 11-17 mils
SC-T5-NSE	Steel Embeds	AM20	Ameron	* Amercoat 68 HS	Amercoat 91 / 91	3-5 / 6-12 / 6-12 = 15-29 mils
SC-T5-NSE	Steel Embeds	CA20	Carboline	*Carbozinc 859	Phenoline1205 / 1205	3-5 / 5-6 / 5-6 =13-17 mils
SC-T5-NSE	Steel Embeds	IN20	International	*Interzinc 52	Intertherm 228 / 228	3-5 / 4-6 / 4-6 = 13-17 mils
SC-T5-NSE	Steel Embeds	SW20	Sherwin Williams	*Zinc Clad IV	Phenicon HS / Phenicon HS	3-5 / 6-8 / 6-8 = 16-21 mils***

NOTES TO APPENDIX C Table 2

* Note 1 – This is a steel coating system shown on the room finish schedule for steel embedded in concrete and structural steel that requires the listed touch up primer and finish coating for chemical resistance. The steel coating system shall be from the same coating manufacturer as the concrete coating system.

** Note 2 – The DFT limitations listed in this column are based on testing to the NFPA 801-2003 and DOE STD 1066 flame spread and smoke developed requirements. The listed DFTs are the maximum allowed for wall coatings. The maximum total film thickness listed in this column includes the residual filler. Differences in DFT from one coating manufacturer's system to another is due to NFPA 801 and DOE STD 1066 flame and smoke independent laboratory testing results.

*** Note 3 – Using system SC-T5-NSE (SW20) from Sherwin Williams as an example, the required DFT is determined by reading from left to right, the first coat is Zinc Clad IV applied at 3-5 mils; the slash separates the second coat, which is Phenicon HS applied at 6-8 mils; the slash separates the third coat, which Phenicon HS applied at 6-8 mils. An additional slash would define a fourth coat and so on. The total DFT is listed after the equal sign.

Appendix D
Color Scheme

1.0 The finish coat on all steel items and equipment other than electrical shall be ANSI* 70 Gray or approved substitute to American National Standards Institute (ANSI) color standard. (*American National Standards Institute)

2.0 The finish coat on standard electrical components and cabinets shall be ANSI 61 Gray or approved substitute to ANSI color standard.

3.0 Finish coat on floor coatings and sumps shall match Benjamin Moore color 2143-50 Old Prairie or approved substitute.

4.0 Finish coat on wall coatings shall match Benjamin Moore color 2143-60 Moonlight White or approved substitute.

5.0 Floor coatings color shall transition over the standard coving and up the wall 6 inch (-0 inch +1 inch). The thickness on the floor/wall coving and wall above the floor coating shall match the wall coating thickness. For gypsum board walls refer to drawing 24590-WTP-A3-A10T-04200002, WTP process Building Architectural Common Interior Wall Details, using detail #4, Detail for typical rated wall base at concrete floor.

Appendix E
Coating Manufacturer's Product Identity Certification Record

Project Name: _____ Coating Manufacturer: _____
Project Number: _____ Purchase Order Number: _____
Project Location: _____ Contract Number: _____
Coating Applicator: _____ Generic Coating Type: _____
Product Name: _____ Product Number: _____

(For multi-component products, provide data for all components. Provide the standard range and actual batch values for each test)

TEST RESULTS		**Component A Batch No.**		**Component B Batch No.**	
Test	**Test Method Used**	**Standard Range**	**Batch Actual**	**Standard Range**	**Batch Actual**
Weight per Gallon					
Viscosity					
Flash Point (Typical)					
% Solids by Volume (Typical)					
Cure to recoat time @ 50F, 70F & 90F (Typical)					
Batch Size					
Date of Mfg.					
Shelf Life					
Expiration Date					

COMMENTS:

I hereby certify that the coating materials described above were manufactured with the same formulation, raw materials, production methods, and quality control standards as the coating materials originally tested and/or accepted for use at the River Protection-Waste Treatment Plant (WTP) Project site, located in the 200 East Area of the Hanford Site in Washington State in accordance with the requirements of specifications 24590-WTP-3PS-AFPS-T0001, 24590-WTP-3PS-AFPS-T0003, 24590-WTP-3PS-AFPS-T0004 & 24590-WTP-3PS-AFPS-T0006.

Signed: _____ Date: _____
Title: _____ Company: _____

Appendix F
Surface Preparation and Coating Inspection Form

REPORT NO:_____ DATE: _____

PROJECT:_____ DAY: M T W T F S S

SUBCONTRACTOR:_____ SHIFT: _____

EQUIPMENT/AREA:_____ INSPECTOR: _____

SUBSTRATE: STEEL/CONCRETE/OTHER-_____ COATING SPEC NO/REV:_____

ENVIRONMENTAL CONDITIONS:

WORK ACTIVITY						
TIME						
DRY BULB TEMP. °F						
WET BULB TEMP. °F						
RH %						
DEW POINT °F						
SURFACE TEMP. °F						
BLOTTER TEST						

PRE-SURFACE PREPARATION:

SP-1:_____ MASKING/PROTECTION:_____ SURFACE DEFECTS:_____

SURFACE PREPARATION:

METHOD:_____ ABRASIVE TYPE/SIZE/STORAGE:_____

RECYCLED ABRASIVE OIL FLOATATION TEST:_____ABRASIVE CONDUCTIVITY TEST:_____

CLEANLINESS SPEC:_____ ACTUAL:_____PROFILE SPEC:_____ ACTUAL:_____

EQUIPMENT:_____

COATING MATERIALS & MIXING:

PRODUCT(S)_____

BATCH NO(S)/QUANTITIES/EXPIRATION DATE:_____/_____/_____

THINNERS/BATCH NO(S)/THINNING RATIO:_____/_____/_____

STORAGE:_____ MIXING: _____ INDUCTION TIME:_____

MATERIAL TEMPERATURE:_____ POT LIFE EXPIRATION TIME:_____

COATING/LINING APPLICATION START TIME:_____ FINISH TIME:_____

COAT: PRIMER/PRIMER T.U./SECOND/SECOND T.U./THIRD/THIRD T.U./OTHER

METHOD:_____ WFT:_____ RECOAT TIME/TEMP:_____ CURE TIME/TEMP:_____

EQUIPMENT:_____

APPLIED COATING:

VISUAL INSPECTION (FILM IMPERFECTIONS):_____

DRY FILM THICKNESS: SPEC:_____ ACTUAL:_____ METHOD:_____

HOLIDAY TEST:_____ METHOD:_____ OTHER TESTING:_____ METHOD:_____

TOUCH-UP AND REPAIR:_____ FINAL CURE:_____

COMMENTS: (*Use reverse side or attach extra pages*)

_____/_____
INSPECTOR'S SIGNATURE/DATE

Appendix G
Secondary Containment Installation Typical Details

- Installation Detail 1A-Floor /Wall Junction
- Installation Detail 1B-Wall/Wall Junction
- Installation Detail 2A-Reinforced Floor/Wall Junction
- Installation Detail 2B-Reinforced Wall/Wall Junction
- Installation Detail 3A-Reserved
- Installation Detail 3B-Construction Joint
- Installation Detail 4-Crack Repair
- Installation Detail 5A-Embed Plates without Steel Attachment
- Installation Detail 5B-Embed Plates with Steel Attachment
- Installation Detail 6-Perimeter Key
- Installation Detail 7-Floor or Wall Steel Embed with Stainless Steel Plate Overlay

Notes-

1. Details 1A and 1B are used for areas containing ancillary equipment with normally open floor drains, which do not contain tanks. (DWP and/or Non-DWP affecting)
2. Details 2A and 2B are for areas that do not have normally open floor drains. (DWP and/or Non-DWP affecting)
3. RESERVED
4. Detail 3B is to be used for construction joints within the limits of the SC lining. The 3B construction joint detail, formed or created (e.g., saw-cut) rectangular slot, shall be centered over the existing concrete construction joint (Refer to Section 6.2.1.4.1). (DWP and/or Non-DWP affecting)
5. Detail 4 is only to be used for large cracks other than minor shrinkage cracks. (DWP and/or Non-DWP affecting)
6. Detail 5A, 5B, 7 are to be used for embedded steel plates, angles, penetrations, etc. The perimeter of all embeds shall be chipped back and filled as shown on detail 5A. Areas containing free flowing floor drains shall use the rigid polymeric filler material. Areas that do not contain free flowing floor drains and within a flood zone shall use flexible polymeric epoxy filler material. (DWP and/or Non-DWP affecting)
7. Detail 6 is only used where the coating system terminates in the middle of a floor. (DWP and/or Non-DWP affecting)

INSTALLATION DETAIL 1A - FLOOR/WALL JUNCTION

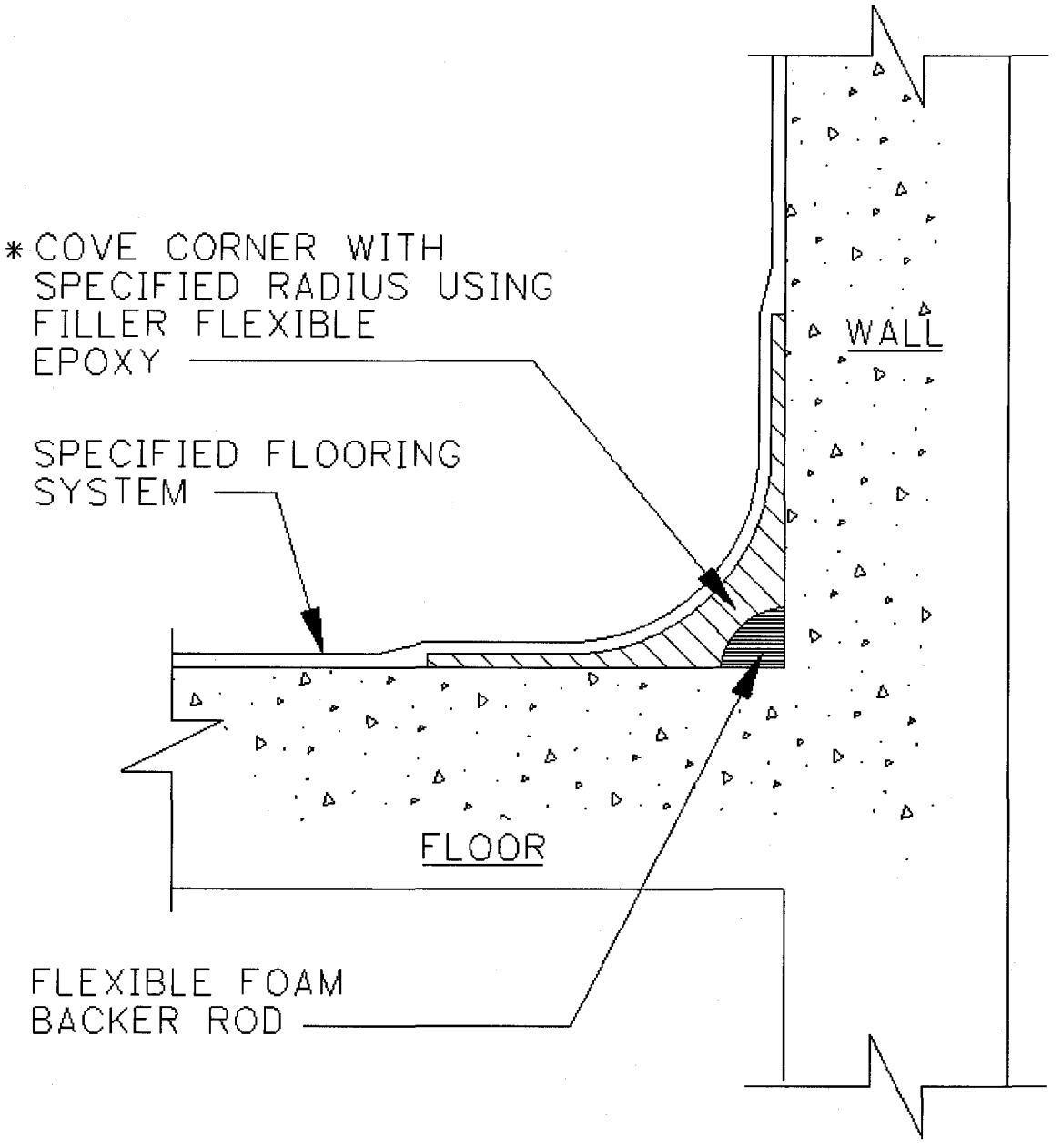

INSTALLATION DETAIL 1B - WALL/WALL JUNCTION

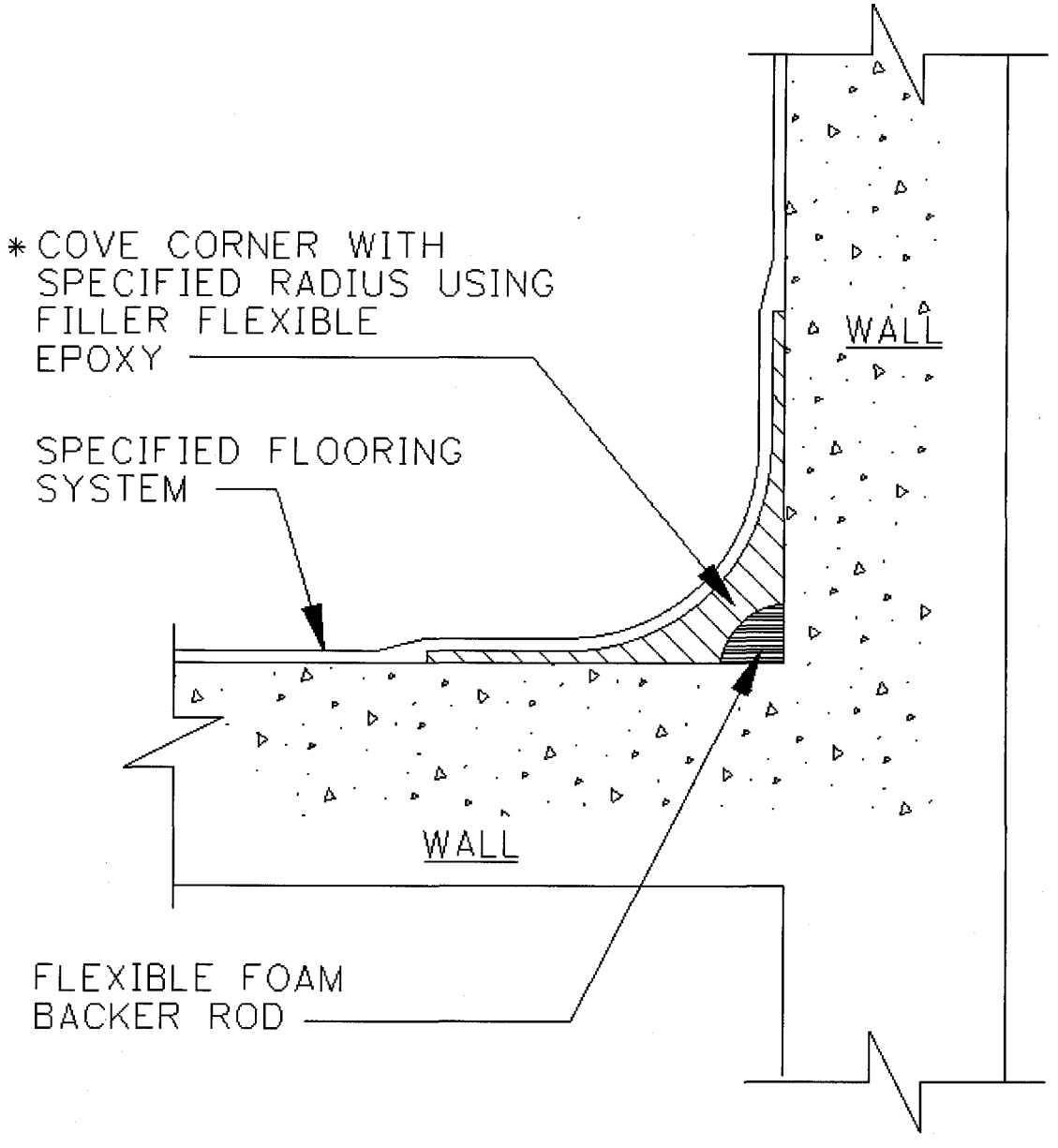

INSTALLATION DETAIL 2A
REINFORCED FLOOR/WALL JUNCTION

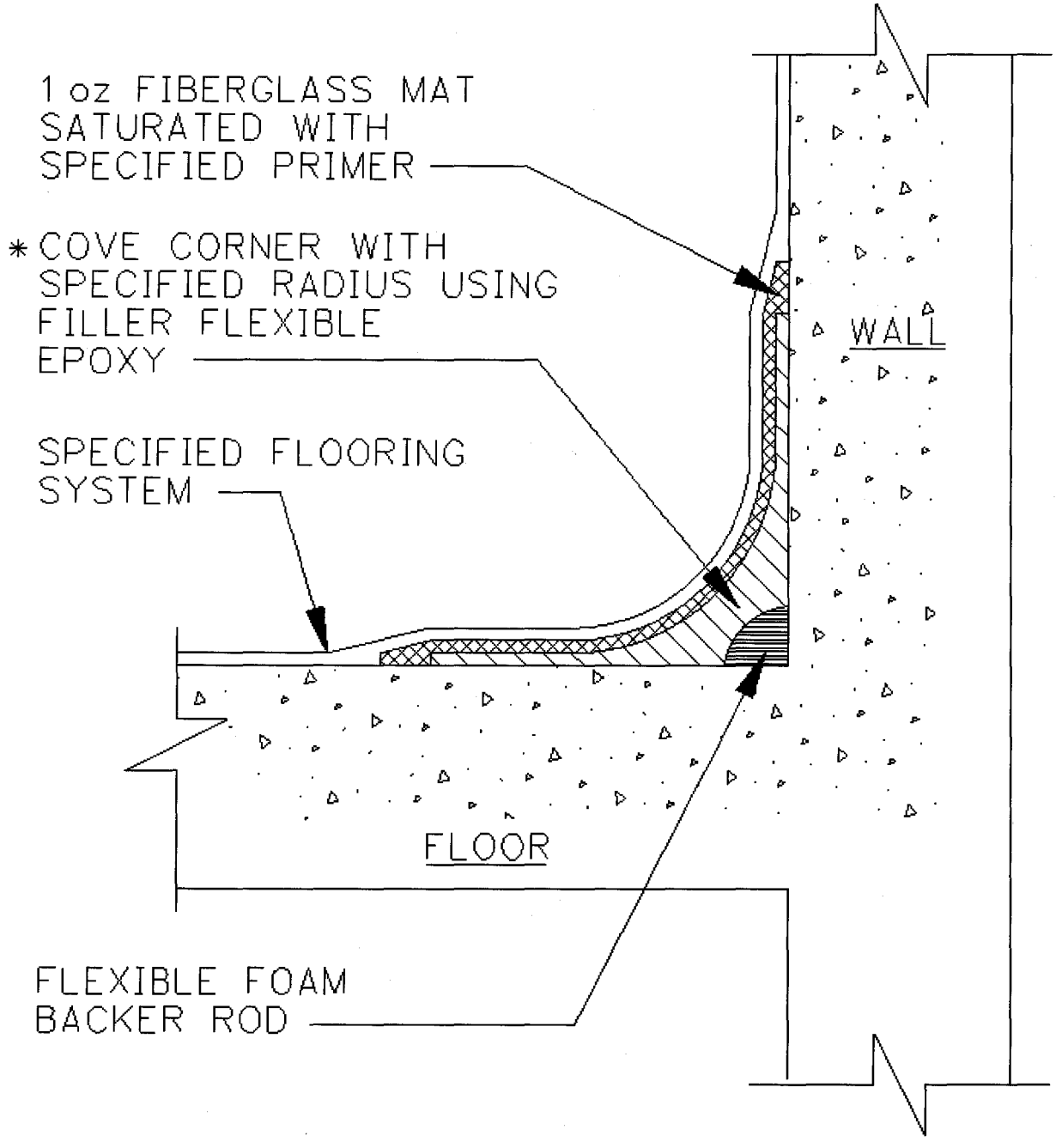

INSTALLATION DETAIL 2B
REINFORCED WALL/WALL JUNCTION

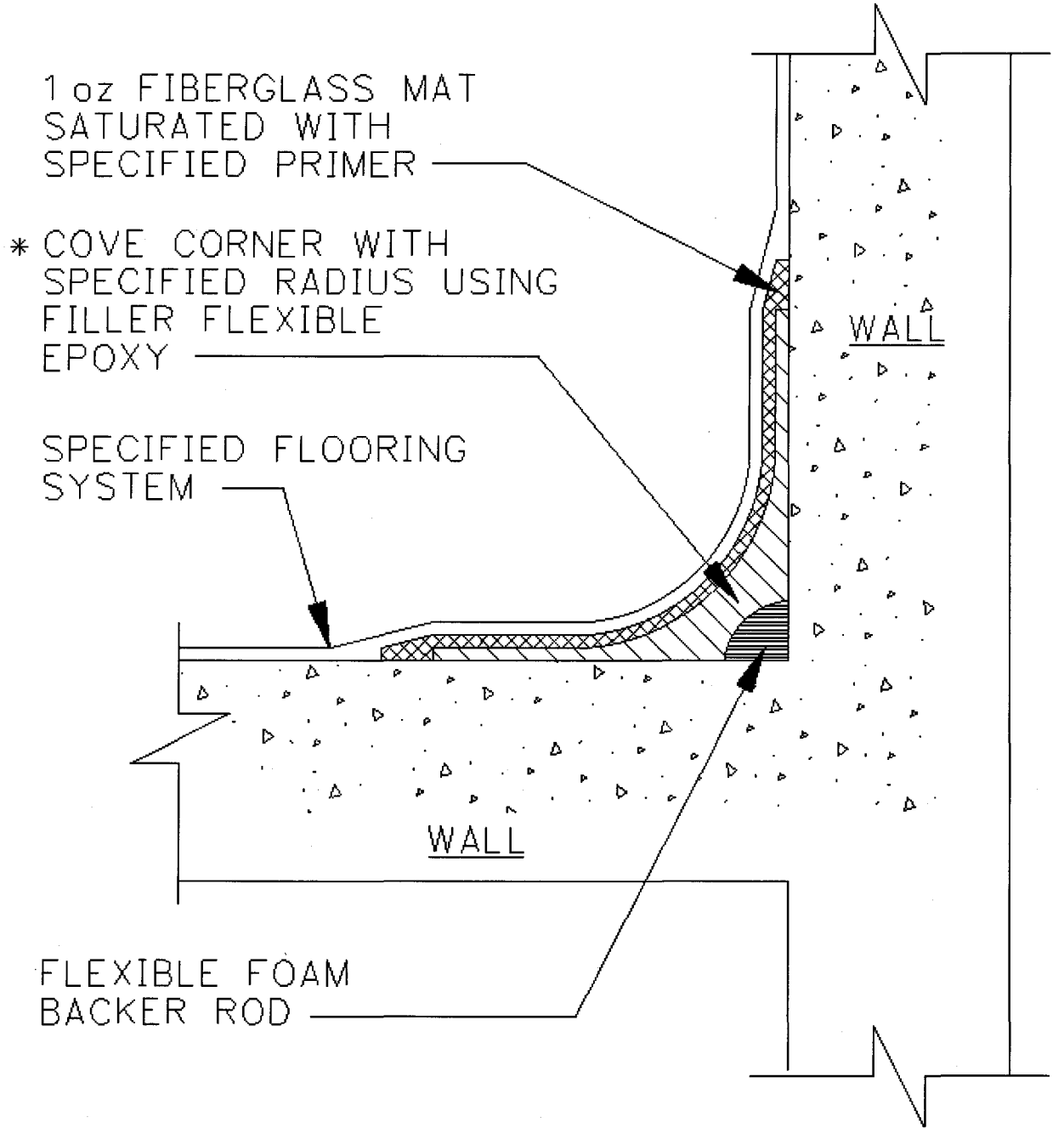

INSTALLATION DETAIL 3A – RESERVED

INSTALLATION DETAIL 3B - CONSTRUCTION JOINT

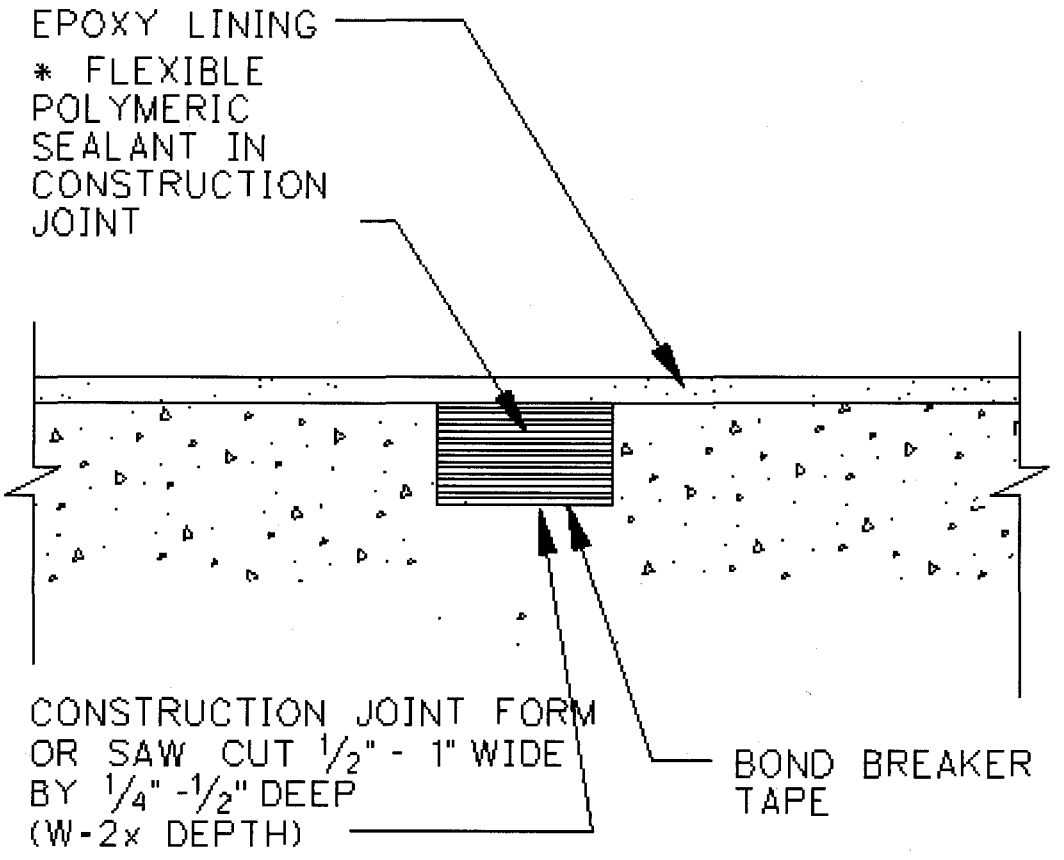

CONCRETE FLOOR/WALL

INSTALLATION DETAIL 4 - CRACK REPAIR

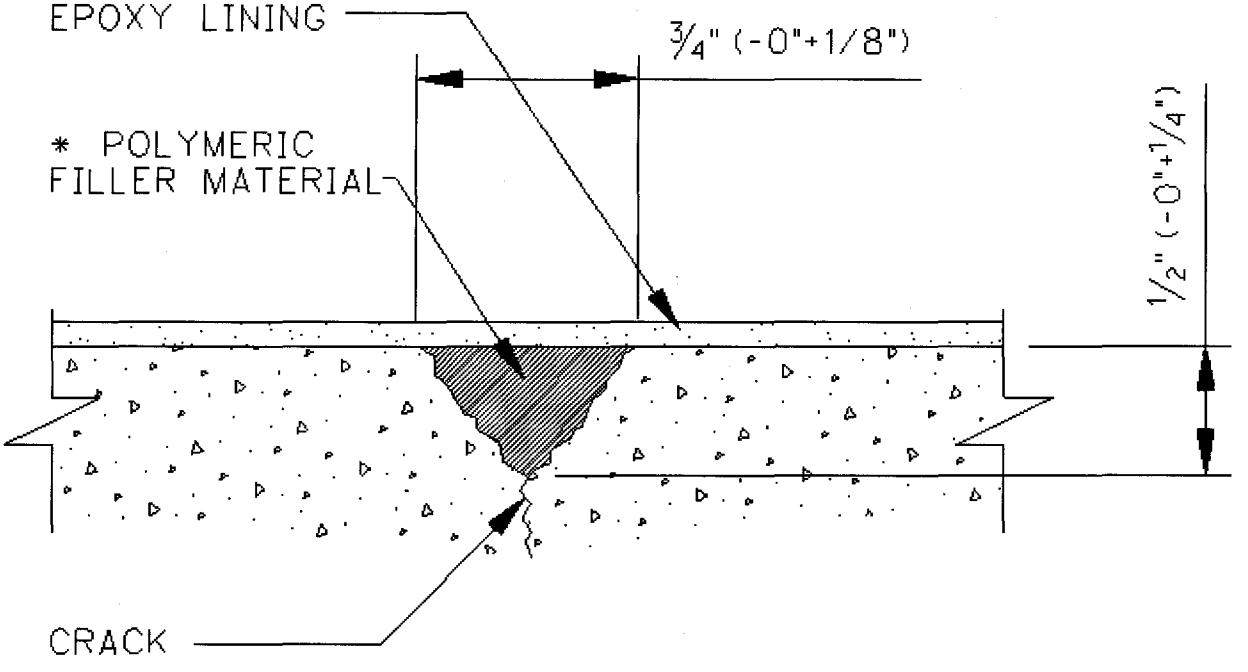

CONCRETE FLOOR/WALL

INSTALLATION DETAIL 5A - EMBED PLATES WITHOUT STEEL ATTACHMENT

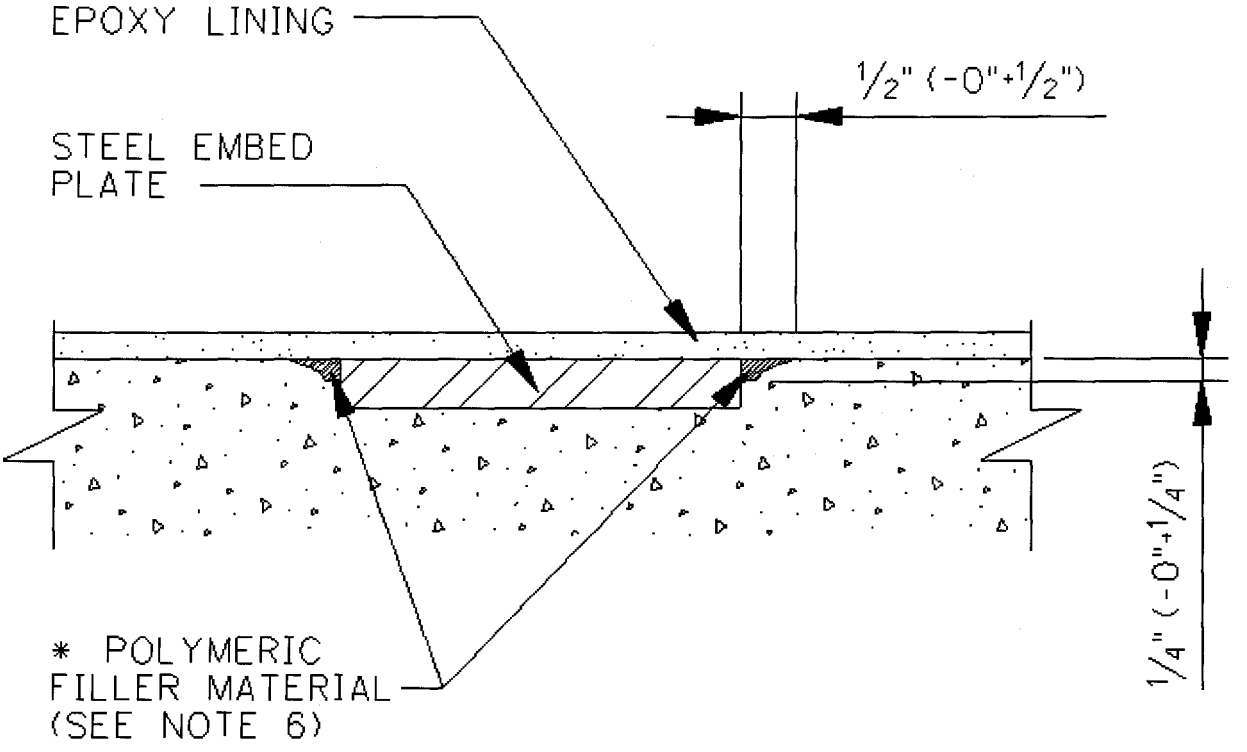

CONCRETE FLOOR/WALL

INSTALLATION DETAIL 5B - EMBED PLATES WITH STEEL ATTACHMENT

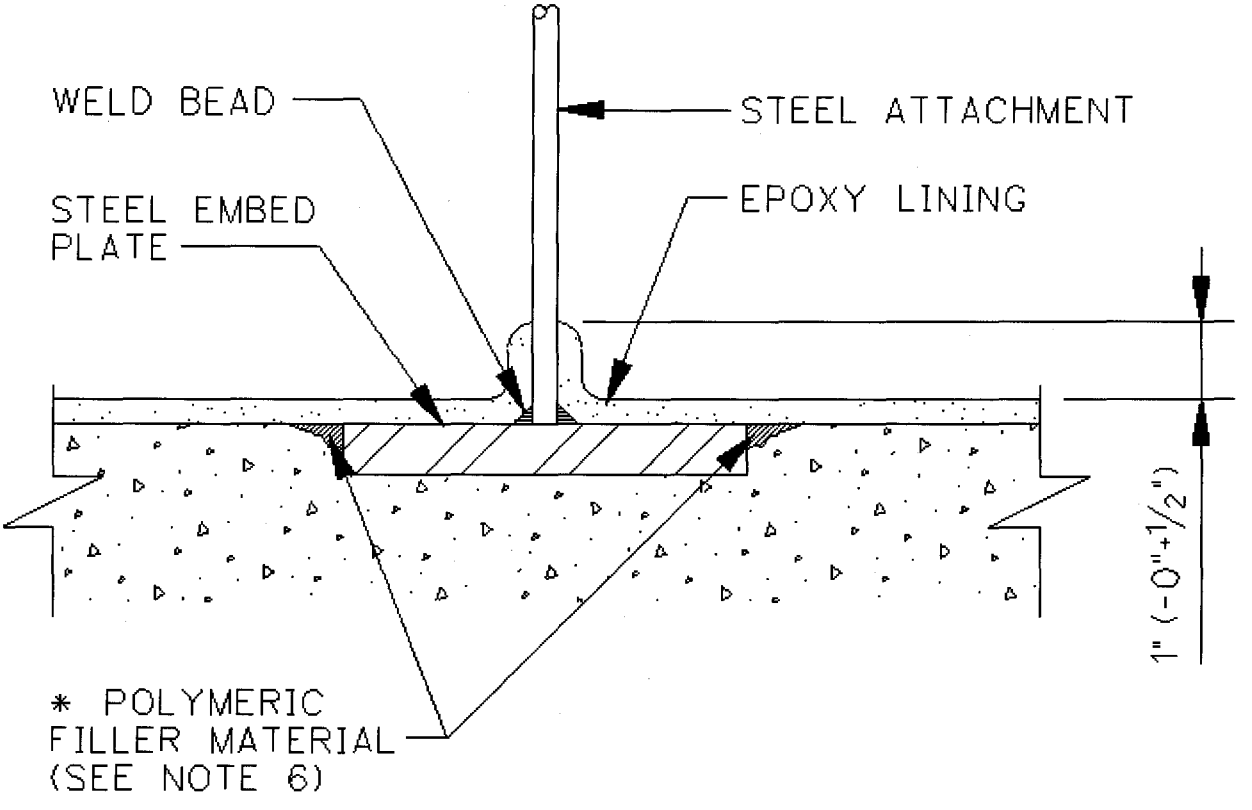

CONCRETE FLOOR/WALL

INSTALLATION DETAIL 6 - PERIMETER KEY

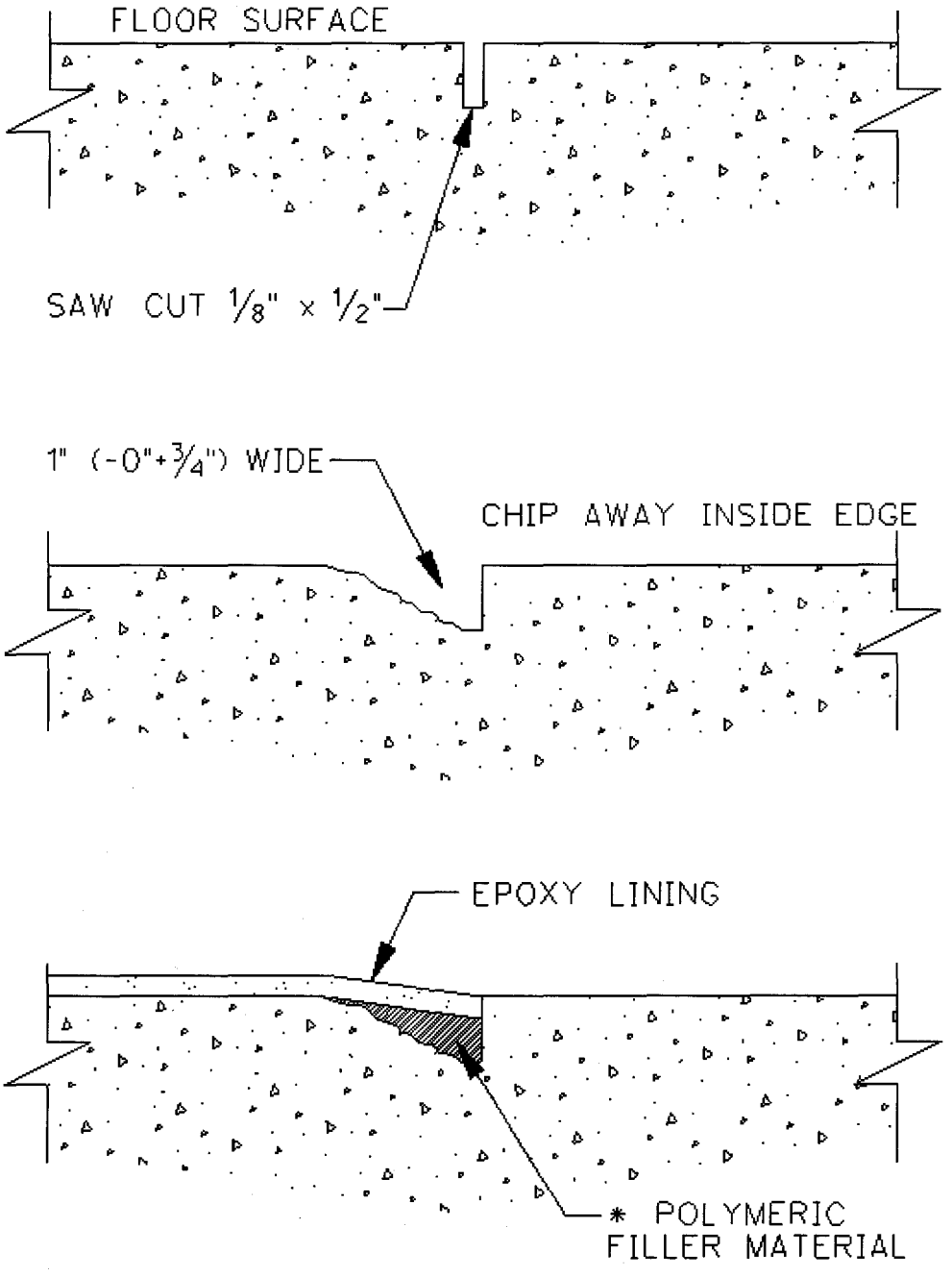

INSTALLATION DETAIL 7 - FLOOR OR WALL STEEL EMBED WITH STAINLESS STEEL PLATE OVERLAY

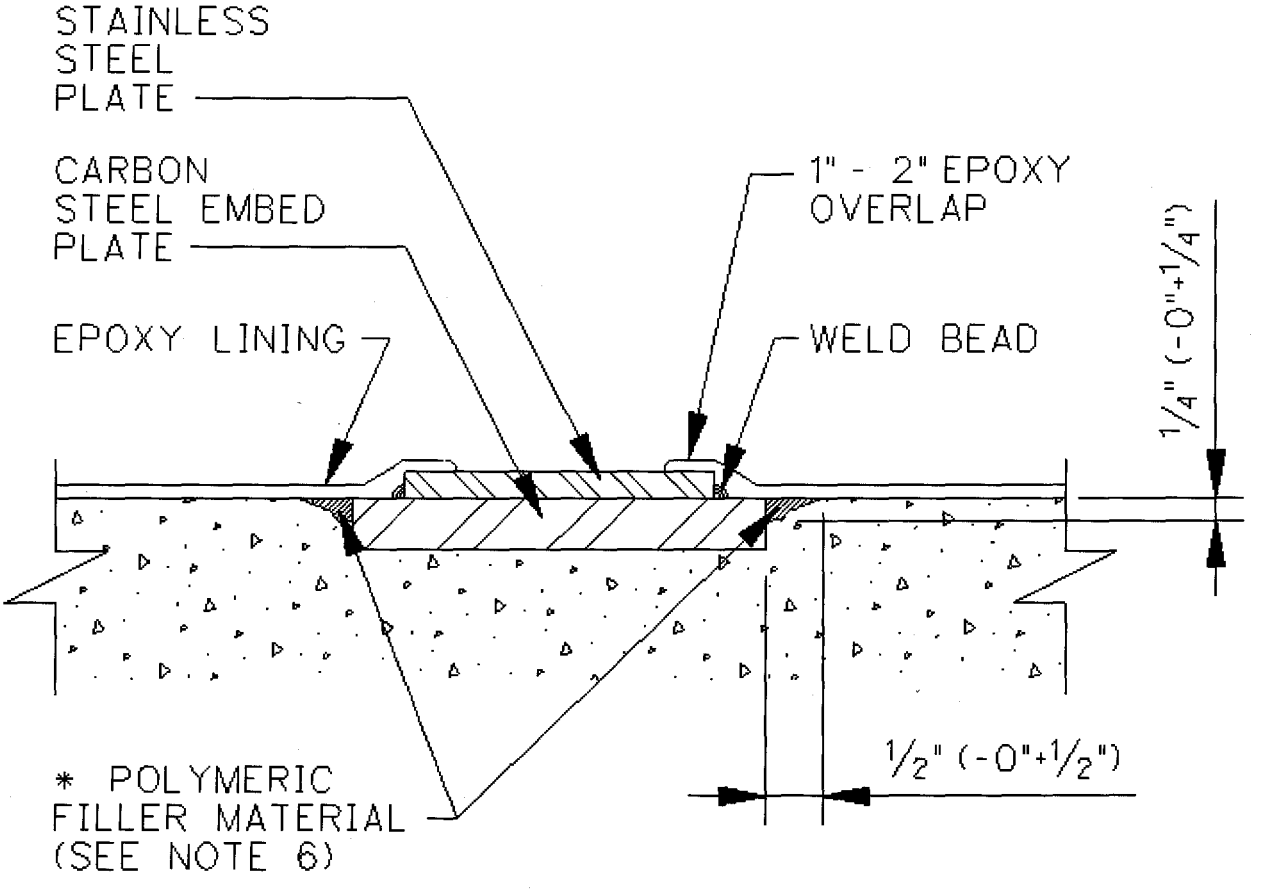

CONCRETE FLOOR/WALL

Appendix H
Interface Installation Detail Drawing References

The table below lists the drawing numbers for Secondary Containment Interface Installation Details. The latest issued revision of these drawings shall be used.

DRAWING NO.	DRAWING TITLE
24590-WTP-DD-S13T-00050	*Civil/Structural Standard Secondary Containment Coating Details Electrical Interfaces*
24590-WTP-DD-S13T-00051	*Civil/Structural Standard Secondary Containment Coating Details Embedment Interfaces*
24590-WTP-DD-S13T-00052	*Civil/Structural Standard Secondary Containment Coating Details Steel Interfaces*
24590-WTP-DD-S13T-00053	*Civil/Structural Standard Secondary Containment Coating Details Concrete Interfaces*
24590-WTP-DD-S13T-00054	*Civil/Structural Standard Secondary Containment Coating Details Mechanical Interfaces*
24590-WTP-DD-S13T-00056	*Civil/Structural Standard Secondary Containment Coating Details Commodity Support Interfaces*

Document title: # Material Selections for Building Secondary Containment/Leak Detection

Contract number: DE-AC27-01RV14136

Department: Mechanical Systems

Author(s): Debbie Adler

Principal author signature: **Originator** By: Debbie Adler - dladler Org Name: MET Placed: Oct 18, 2016

Document number: 24590-WTP-PER-M-02-001, Rev 4

Checked by: Ming Fang

Checker signature: **Checked** By: Ming Fang - mfang Org Name: Becht National Inc. Placed: Oct 18, 2016

Date of issue:

Issue status: Issued for Permitting Use

Approved by: Tom Erwin

Approver's position: MET EGS

Approver signature: Tom Erwin 10/19/16

This bound document contains a total of ~~9~~ 10 sheets RR 10/19/16

River Protection Project
Waste Treatment Plant
2435 Stevens Center Place
Richland, WA 99352
United States of America
Tel: 509 371 3500

Notice

Please note that source, special nuclear, and byproduct materials, as defined in the Atomic Energy Act of 1954 (AEA), are regulated at the US Department of Energy (DOE) facilities exclusively by DOE acting pursuant to its AEA authority. DOE asserts, that pursuant to the AEA, it has sole and exclusive responsibility and authority to regulate source, special nuclear, and byproduct materials at DOE-owned nuclear facilities. Information contained herein on radionuclides is provided for process description purposes only.

History Sheet

Rev	Date	Reason for revision	Revised by
0	7-1-02	Initial issue	JR Divine
1	7-11-02	Added text	JR Divine
2	8-8-02	Issued for Permitting Use	JR Divine
3	8-14-03	Clarified transfer lines source term, added AEA statement and re-Issued for Permitting Use	HM Krafft
4	8/17/16	Extensive revisions; no rev bars shown. Include the Effluent Management Facility details Additional discussion of WAC coating requirements Additional discussion of coating system for outdoor secondary containment areas Additional discussion of coatings in high pH solutions and acid leaks in the absence of waste Additional discussion of leak detection instruments Other editorial changes.	DL Adler

Contents

Notice ii
1 Introduction 1
2 Applicable Documents 1
3 Description 1
3.1 Sumps and Leak Detection Boxes 2
3.2 Coatings and Liners 3
3.3 Leak Detection 4
4 Conclusions 5

1 Introduction

The Washington Administrative Code, Chapter 173-303 WAC, *Dangerous Waste Regulations*, requires the use of leak detection and secondary containment for systems containing dangerous waste. This report discusses the use of coatings and stainless steel for use as secondary containment in the Effluent Management (EMF), High Level Waste (HLW), Low Activity Waste (LAW), Pretreatment (PT), and Laboratory (Lab) facilities. This document also describes material selection for instrumentation used in secondary containment for leak detection.

Fluids released to the secondary containment will flow to a sump or leak detection box. The fluid level in sumps will be monitored by a bubbler, a radar level detector, a thermal level detector or their combinations. Fluid levels in leak detection boxes will be monitored by a thermal level detector. Sumps that are normally dry except in off-normal situations will be constructed of ASTM A240 type 304L stainless steel or a more corrosion resistant alloy. Some of the more resistant alloys include ASTM A240 type 316L stainless steel and ASTM B688 UNS N08367 or ASTM B625 UNS N08926, 6% molybdenum (6% Mo) alloys. Primary or wet sumps that contain liquids during decontamination activities will be a 6% Mo alloy.

2 Applicable Documents

None

3 Description

After describing selected system features and operating concerns, a brief description of the corrosion factors for sumps, leak detection boxes, cell liners, and leak detectors is discussed.

System Features

- Secondary containment shall be remotely flushed after a leak is detected. Cells with secondary containment are provided with wash rings or another method to flush the cell with water or a caustic or acid solution if necessary. The flush solution flows to sumps for removal.
- Dry sumps and leak detection boxes are normally dry and will be flushed and drained after a leak is detected.
- Primary, or wet, sumps maintain a liquid level during decontamination or equipment washing operations.
- Stainless steel cell liners are used in inaccessible areas or in areas where a potential spill of waste would require a higher level of corrosion protection. Coatings may be used in areas where repair maintenance can be performed.
- The portion of the bubbler tube (leak detection) in the sump will be constructed of the same corrosion resistant material as the sump based on process conditions.
- The bubblers are fed with dry process air or instrument air, dew point of 40 degrees below 0 Fahrenheit (-40 °F).
- Airflow rates are sufficiently small that aerosols formed by the air bubbling through the liquid and that could deposit on the probe surfaces will not form.

- The resistance temperature detector (RTD) enclosures for thermal level detector in secondary containment will be constructed of the same material as the secondary containment.
- Depending on the design, the radar level detector wave-guide may or may not contact the liquid. Any portion of the wave-guide below the top of the sump will be constructed of the same material as the sump. If process conditions require it, a more corrosion resistant alloy will be used.
- Multiple leak detection instrumentation may be installed if a lack of maintenance access after the start of operations is expected.

Considerations:

Several factors must be considered in specifying the materials of construction. These include temperature, lifetime dose, expected chemistry including pH (the negative logarithm of the hydrogen ion activity), and time of exposure.

Temperature - Most regions in the five facilities will operate in the 75 °F to 125 °F range with an upper limit of 150 °F. In exceptional regions, associated with the melters, air temperatures can significantly exceed 300 °F. Melter cell liner temperatures will be maintained at significantly less than 300 °F due to the cell ventilation systems

Radiation – The 40 year integrated gamma radiation dose within the PT Facility are estimated to be as high as 26×10^9 rad, though most locations are less. The highest expected 40-year dose rate in waste transfer lines is between the PT Facility and the HLW Facility. The dose rate for the PT Facility to HLW Facility transfer line is estimated to be less than 6×10^7 rad based on a bounding assumption that the transfer line is full of waste at all times.

pH - The pH within process vessels can vary depending on the operation. Process solutions range from 50% sodium hydroxide to about 40% nitric acid; although no vessel is expected to be exposed to the entire range of pH values.

Time of Exposure – Time of exposure will affect the degree of uniform corrosion that can occur. Because pitting and cracking generally have some degree of incubation period, short exposures to potentially corrosive conditions may not have an effect.

3.1 Sumps and Leak Detection Boxes

Sumps are either dry sumps or primary (wet) sumps. Sumps, except for primary (wet) sumps are normally dry, and will be flushed and drained in the event of spill. Dry sumps will only receive effluent from a spill, a maintenance decontamination event, or, in the case of outside sumps, occasional precipitation. In accordance with the WAC and DWP permit conditions, the contents of the sump must be removed within 24 hours, or as practicable, and be flushed. Under these conditions, dry sumps may be constructed of type 304L stainless steel or more corrosion resistant alloys, including type 316L stainless steel and 6% Mo alloys.

Primary (wet) sumps will normally have liquid present during equipment decontamination operations. Because of uncertainties about the chemistry of the solutions in the sump, evaporation rates, and the effects at the liquid/air interface, the primary sumps will be constructed of a 6% Mo alloy.

Leak detection boxes collect a leak in the annular space of double-walled or coaxial piping and are normally dry. Leak detection boxes may be constructed of type 304L stainless steel or more corrosion resistant alloys, such as type 316L stainless steel and 6% Mo alloys.

3.2 Coatings and Liners

3.2.1 Special Protective Coatings

The WAC requires that dangerous waste permit (DWP) secondary containment areas be provided with an impermeable coating that is compatible with the stored waste in order to prevent the migration of waste into the concrete.

Both mechanical and chemical factors are important in the selection of special protective coatings. The mechanical factors include foot traffic, fork lift operation, and dropping of or installation of equipment. The chemical effects include, but are not limited to, pH, radiation, and temperature.

Novolac type epoxies are available that can withstand temperatures to about 300 °F, lifetime doses to about 2×10^8 rad, and concentrated caustic or nitric acid for several hours.

The combined effects of pH, temperature, and radiation on coatings are not well defined but would be expected to reduce the useful life. No situation is expected where temperatures above 300 °F will be combined with pH extremes.

Coating system for outdoor secondary containment areas (concrete) shall be comprised of polyurea (100% solid) to protect epoxy coating from degradation due to atmospheric (UV) exposure.

A shorter exposure of coatings to any of above conditions have minimal impact on coating life. Exceeding any of the above conditions requires access for maintenance of the coating. Coating are inspected regularly in accordance with WAC and DWP requirements.

To determine the level of protection needed, several leak options are evaluated:

High pH solutions
All of the suggested coatings are subject to damage if there is extended exposure to strong caustic. If exposure is greater than 5 days, surfaces should be flushed and evaluated for damage.

Acid leaks in the absence of waste
Coatings can be used if they can be washed within 5 days. Otherwise, they could be damaged by long-term exposure (greater than several days depending on the concentration) to nitric acid. After such exposure, the coating should be flushed and evaluated for damage. Where failure of the coating could lead to exposure of concrete to acid solutions, coatings are not recommended.

Water leaks in the absence of waste
Coatings are acceptable, except in high radiation areas where human access for performing coating maintenance is not possible.

Acid or water (pH < 12) leak with waste present
As noted above for acid leaks, coatings are not recommended except where maintenance is feasible. Leaks at pH values near or less than 0 are of primary concern.

3.2.2 Stainless Steel liners

To determine the level of protection needed, several leak options are evaluated:

High pH solutions
Type 304L stainless steel is resistant to caustic solutions.

Acid leaks in the absence of waste
Type 304L stainless steel is specified as the liner material. The corrosion resistance of type 304L is very effective for nitric acid exposure in secondary containment areas.

Water leaks in the absence of waste
In the absence of waste, no failure of the type 304L liner is expected.

Acid or water (pH < 12) leak with waste present
With type 304L stainless steel, flushing within a day of the leak is preferred. However, as the temperature of any leaking fluid on the liner will be much lower than that in the pipe or vessel, no accelerated corrosion of the liner is anticipated. Further, because in a typical fabrication the weld is considered to be more prone to defects that result in leaks, vacuum box testing will be conducted on liner plate welds as a precautionary measure to ensure weld integrity and eliminate potential leakage to the concrete.

3.3 Leak Detection

Should a leak occur, the fluids will flow to the sumps where instrumentation such as radar level detectors, bubblers, or thermal level detectors will detect the liquid in the sump or leak detection box. Bubbler tips, radar wave guides and thermal detectors will be exposed to the solution in the event of a leak. Factors considered in reviewing the probe performance are:

- external environment
- internal environment
- immersion environment
- duration of immersion

The external environment of both probe types above the liquid level and the internal environment of the wave-guides and thermal level detector is air, which is benign. The internal environment for bubblers is dry air and is extremely benign. The bottom of the thermal level detector tip is completely sealed. The internal surface of the probe for this type of instrumentation is not expected to be wetted by the leaked liquid. The wetted portion of immersed probe will be in the same solution as the sump in which it is located.

3.3.1 Leak Detection Instruments in Dry Sumps and Leak Detection Boxes

The probability that leak detection instruments will be in contact with leaked solution is very low because the liquid is confined by the primary vessel or piping containment. Liquid is not normally present except in the event of a spill or during maintenance decontamination of the cell or process area. The impact of the immersion of the wave guide, bubbler, and thermal level detector will be further minimized by spill response procedures and actions required to respond and remove sump liquids.

As described in the bullets in Section 3 above, sumps and leak detection box are normally dry, and will be flushed and drained in the event of spill. Sumps will only receive effluent from a spill, a maintenance decontamination event, or, in the case of outside sumps, occasional precipitation. In accordance with the WAC and DWP permit conditions, the contents of the sump or leak detection box must be removed within 24 hours, or as practicable.

In the course of any of these evolutions, the effluent will be removed and the sump and its associated leak detection instrument will be flushed and drained. After leaked or spilled liquid has been removed, the wetted area of leak detection instrument will be washed by the secondary containment flushing and draining process. Therefore, the residual chemical build up at wetted portions of the instruments is not expected.

The only time leak detectors may be subjected to corrosion is the time between liquid reaching the detector, and the time that the flushing or draining process is complete. This time period is limited and even a moderate level of corrosion is not expected.

Material selection for dry secondary containment level detection systems is reviewed and approved by MET prior to procurement. At that time of that review, a decision is made regarding the selection of more corrosive resistant materials.

3.3.2 Leak Detection Instruments in Primary or Wet Sumps

Primary or wet sumps have limited application at WTP. There are five primary sumps located in the PT Facility hotcells to support equipment decontamination and flushing. Primary sumps contain fluids during equipment decontamination operations and are located within a secondary containment sump. Both the primary and secondary containment sumps are provided with leak detection. Since the leak detectors in primary sumps have more potential to be wetted, more corrosion resistant materials are recommended for the portions in contact with liquid.

Material selection for primary sump level detection systems is reviewed and approved by MET prior to procurement. At the time of that review, a decision is made regarding the selection of more corrosive resistant materials.

4 Conclusions

- Cell special protective coatings or stainless steel liners are required as part of secondary containment.
- Coatings are not used as process cell liners unless they can be maintained.
- Type 304L stainless steel is acceptable for process and vessel cell liners because it is compatible with the expected temperature and radiation limits.
- Dry sumps and leak detection boxes will be constructed of type 304L or 316L stainless steel, or 6% Mo alloy.
- Primary sumps are constructed of a 6% Mo alloy.
- The leak detectors used in dry sumps will be constructed with same material as the sump or leak detection box.
- If process conditions will result in the frequent immersion of the radar wave-guides, a more corrosion resistant alloy such as 6% Mo is used.
- A more corrosion resistant material is recommended for the leak detector used in primary or wet sumps.

- Corrosion of the wave guide, bubbler, and thermal level detector by immersion will be further minimized by spill response procedures.
- Spills will be removed from sumps and leak detection boxes within 24 hours, or as practicable in accordance with WAC and Dangerous Waste Permit requirements

PLANT ITEM NUMBER	DEP-FILT-00003	DEP-AGT-00001	DEP-PMP-00001A/B	DEP-VSL-00001	DEP-VSL-00004A/B	DEP-VSL-00002	DEP-PMP-00004A/B/C	DEP-PMP-00002A/B	DEP-PMP-00012A/B/C
DESCRIPTION	EVAPORATOR FEED PREFILTER	LOW POINT DRAIN VESSEL AGITATOR	LOW POINT DRAIN VESSEL PUMPS	LOW POINT DRAIN VESSEL	OVERHEAD SAMPLING VESSELS	EVAPORATOR FEED VESSEL	OVERHEAD SAMPLING VESSEL TRANSFER/ RECIRCULATION PUMPS	EVAPORATOR FEED VESSEL TRANSFER PUMPS	EVAPORATOR FEED VESSEL RECIRCULATION PUMPS
BATCH VOLUME CAPACITY/ DUTY	130 GPM 5 MICRON NOTE 12	40 HP HOLD 2	55 GPM	6300 GAL	22300 GAL	28800 GAL	130 GPM NOTE 10 HOLD 1	10 GPM	HOLD 1

PROCESS CONDENSATE FROM DEP-COND-00001 — D2 | BOF-00012 — DEP04

CHEMICAL WASTE FROM LVP-TK-00001 — D2 | LAW-00011 — LVP21 — LAW BOF — NOTE 6

OFF-SPEC CONDENSATE FROM DEP-VSL-00005A/B — E2 | BOF-00014 — DEP20e (OFF-SPEC)

DEP-VSL-00004A/B — LI, TI — NOTE 8 — PI — DEP06 — VENT HEADER G8 | BOF-00013

DEP01a — SS — FC — PI — NOTE 5 — DEP-PMP-00004A/B/C — DEP01 — CONDENSATE TO DEP-VSL-00005A/B — G8 | BOF-00014

CAUSTIC FROM SHR-TK-00013 — B2 | BOF-00013 — DEP11

EVAPORATOR CONCENTRATE FROM DEP-EVAP-00001 — B2 | BOF-00012 — DEP05e (OFF-NORMAL)

EFFLUENT CONCENTRATE FROM DEP-VSL-00003A/B/C — E2 | BOF-00013 — DEP13c (OFF-SPEC RECYCLE)

LAW EFFLUENT FROM RLD-VSL-00003/5 — E2 | LAW-00014 — NOTE 11 — RLD21 — LAW BOF — RLD27 — NOTE 6

LAB EFFLUENT FROM RLD-VSL-00164 — E2 | LAB-00029 — RLD41 — LAB BOF — NOTE 6

PDI — PSA — DIW — NOTE 7 — DEP-FILT-00003 — DEP03a

DEP01b — PI — DEP07 — VENT HEADER G8 | BOF-00013 — (OFF-SPEC RECYCLE)

DEP-VSL-00002 — LI, TI — NOTE 8 — DEP02a — SS — PH — PI — AI — FC — NOTE 5 — DEP-PMP-00012A/B/C — (OFF-NORMAL) DEP02b — RETURNS TO TANK FARM TO DEP-HX-00001 — D8 | BOF-00013

DEP03 — DEP-PMP-00002A/B — (OFF-NORMAL) DEP13d — FILTERED CONCENTRATE TO DEP-HX-00001 — D8 | BOF-00013

DEP03b — SOLIDS FLUSH TO DEP-VSL-00003A/B/C — G8 | BOF-00013

DEP08 — VENT HEADER G8 | BOF-00013

DEP02 — EVAPORATOR FEED TO EVAPORATOR — B8 | BOF-00012

DRAINS FROM TRANSFERS TO/FROM EMF — NOTE 13 — RLD21f — RLD41c — LVP21d — DEP13h

TRANSFER LINE DRAIN FROM LAWPS FEED TRANSFER — G2 | LAW-00001 — LCP07h

PI — SS — LI, TI — DEP-AGT-00001 — DEP-PMP-00001A/B — OVERFLOW — NOTE 9 — DIW — DEP-VSL-00001 — TO SUMP

NOTES:

1. SEE DRAWING 24590-WTP-M5-V17T-00001 FOR GENERAL NOTES AND SYMBOLS AND LEGEND.
2. CONTENTS OF THIS DOCUMENT ARE DANGEROUS WASTE PERMIT AFFECTING.
3. ONLY MAJOR INDICATION AND CONTROL INSTRUMENTATION SHOWN.
4. STREAM TABLES FOR SYSTEMS DEP AND DVP PROVIDED ON 24590-BOF-M3-V17T-00001001 AND -00001002.
5. DEP-PMP-00004A/B/C AND DEP-PMP-00012A/B/C ARE RATED FOR 2 X 50% NORMAL OPERATIONS.
6. EACH TRANSFER LINE REQUIRES DRAIN BACK TO THE LOW POINT DRAIN VESSEL, DEP-VSL-00001.
7. BACKFLUSH PROVIDED BY PROCESS CONDENSATE (PREFERRED) OR DIW. FILTER AND SOLIDS REQUIRE CONTAMINATED SOLID MATTER DISPOSAL.
8. OVERFLOW TO LOW POINT DRAIN VESSEL, DEP-VSL-00001.
9. DEP-VSL-00001 OVERFLOW PASSES THROUGH A LOOP SEAL WITH LEVEL INDICATION AND DIW MAKE-UP.
10. BATCH TRANSFER RATE IS 130 GPM. REQUIRED RECIRCULATION RATE TO BE DETERMINED BY VENDORS. SEE HOLD/OPEN ITEMS.
11. RLD21 AND RLD27 TRANSFER FROM LAW THROUGH THE SAME LINE AT SEPARATE TIMES WITHOUT BLENDING. TRANSFER OF RLD27 IS AN OFF-NORMAL OCCURRENCE.
12. TRANSFER RATE FROM RLD-VSL-00005 PROVIDES THROUGHPUT FOR DEP-FILT-00003.
13. TRANSFER LINE DRAINS FOR TRANSFERS FROM LVP-TK-00001, RLD-VSL-00003/5, RLD-VSL-00164, AND DEP-VSL-00003A/B/C.

HOLD/OPEN ITEMS:

1. PUMP SIZING FOR RECIRCULATION RATE TO BE DETERMINED BY VENDOR.
2. DEP-AGT-00001 HORSEPOWER BASED UPON LCP-VSL-00001 AGITATOR DESIGN. DEP-AGT-00001 FINAL HORSEPOWER TO BE DETERMINED BY VENDOR.

REFERENCES:

1. 24590-BOF-3ZD-25-00001, WTP DIRECT FEED LOW ACTIVITY WASTE (DFLAW) FACILITY AND SYSTEM DESIGN DESCRIPTIONS.
2. 24590-WTP-RPT-PR-01-008, PROCESS STREAM NUMBERS.
3. 24590-WTP-RPT-ENG-02-009, SYSTEM AND AREA LOCATORS LIST AND SYSTEM DIVISION OF RESPONSIBILITY.
4. 24590-WTP-RPT-ENG-02-010, COMPONENT IDENTIFIERS LIST.
5. 24590-BOF-MVC-DEP-00009, BATCH SIZING CALCULATION FOR DEP (DIRECT FEED LAW EFFLUENT MANAGEMENT FACILITY PROCESS SYSTEM) VESSELS: DEP-VSL-00001, -00002, -00003A/B/C, -00004A/B, -00005A/B.
6. 24590-BOF-MVC-DEP-00007, PROCESS DATA FOR OVERHEAD SAMPLING VESSELS (DEP-VSL-00004A/B) AND PUMPS (DEP-PMP-00004A/B/C).
7. 24590-BOF-MVC-DEP-00003, PROCESS DATA FOR EVAPORATOR FEED VESSEL (DEP-VSL-00002), TRANSFER PUMPS (DEP-PMP-00002A/B), AND RECIRCULATION PUMPS (DEP-PMP-00012A/B/C).
8. 24590-BOF-MVC-DEP-00011, PROCESS DATA FOR THE LOW POINT DRAIN VESSEL, DEP-VSL-00001, AND PUMPS, DEP-PMP-00001A/B.
9. 24590-LAW-MVC-RLD-00007, PROCESS DATA INPUT FOR LAW SBS CONDENSATE COLLECTION VESSEL, RLD-VSL-00005, AND DISCHARGE PUMPS (RLD-PMP-00003A/B).

Please note that source, special nuclear, and byproduct materials, as defined in the Atomic Energy Act of 1954 (AEA) are regulated at the U. S. Department of Energy (DOE) facilities exclusively by DOE acting pursuant to its AEA authority. DOE asserts that pursuant to AEA, it has sole and exclusive responsibility and authority to regulate source, special nuclear, and byproduct materials at DOE-owned nuclear facilities. Information contained herein on radionuclides is provided for process description purposes only.

REV	DESCRIPTION	ORG	CHKD	RVWD	APVD	DATE
0	ISSUED FOR DESIGN	DJC	SN	N/A	[illegible]	3/24/16

REVISION HISTORY

ISSUED BY RPP-WTP PDC ISSUE STAMP

	PROJECT No.	24590
	SITE	HANFORD
	AREA	200E
	BUILDING No.	25

	BY	DATE
ORIGINATOR	[signature]	3/24/16
CHECKER	[signature]	3/24/16
APPROVER	[signature]	3/24/16
REVIEWER	N/A	

CONTENT APPLICABLE TO ALARA? [X] YES [ ] NO
ADR NO. 24590-BOF-ADR-PR-15-0001 REV: 0

BECHTEL NATIONAL, INC.
RIVER PROTECTION PROJECT
WASTE TREATMENT PLANT
2435 STEVENS CENTER PLACE
RICHLAND, WA 99354

CONTRACT No: DE-AC27-01RV14136

PROCESS FLOW DIAGRAM DIRECT FEED EFFLUENT TRANSFER (SYSTEM DEP)

SCALE: NONE

24590-BOF-M5-V17T-00011 REV 0

"E" SIZE - 44x34
COMPUTER GENERATED - MANUAL DESIGN CHANGES NOT PERMITTED

R11777521

3/18/2016 3:06:38 PM

FORM E_SDN.DGN 02/2009

PLOTTED BY: tcservic

c:\work\tcservic\dms\25225\24590-BOF-M5-V17T-00011.dgn

24590-BOF-M5-V17T-00012

PLANT ITEM NUMBER	DEP-COND-00002	DEP-COND-00003	DEP-RBLR-00001	DEP-PMP-00017	DEP-FILT-00004A/B	DEP-EVAP-00001	DEP-COND-00001	DEP-PMP-00006A/B	DEP-PMP-00007A/B
DESCRIPTION	DEP EVAPORATOR INTER-CONDENSER	DEP EVAPORATOR AFTER-CONDENSER	DEP EVAPORATOR REBOILER	DEP EVAPORATOR RECIRCULATION PUMP	CONDENSATE DUPLEX CARTRIDGE FILTERS	DEP EVAPORATOR SEPARATOR VESSEL 1200 GAL	DEP EVAPORATOR PRIMARY CONDENSER	DEP EVAPORATOR CONDENSATE PUMPS	EVAPORATOR CONCENTRATE DISCHARGE PUMPS
BATCH VOLUME CAPACITY/ DUTY	426000 BTU/HR	167000 BTU/HR	5.16 MMBTU/HR	3500 GPM HOLD 1	10 GPM 1.0 MICRON	HOLD 1	5.00 MMBTU/HR	10 GPM	10 GPM

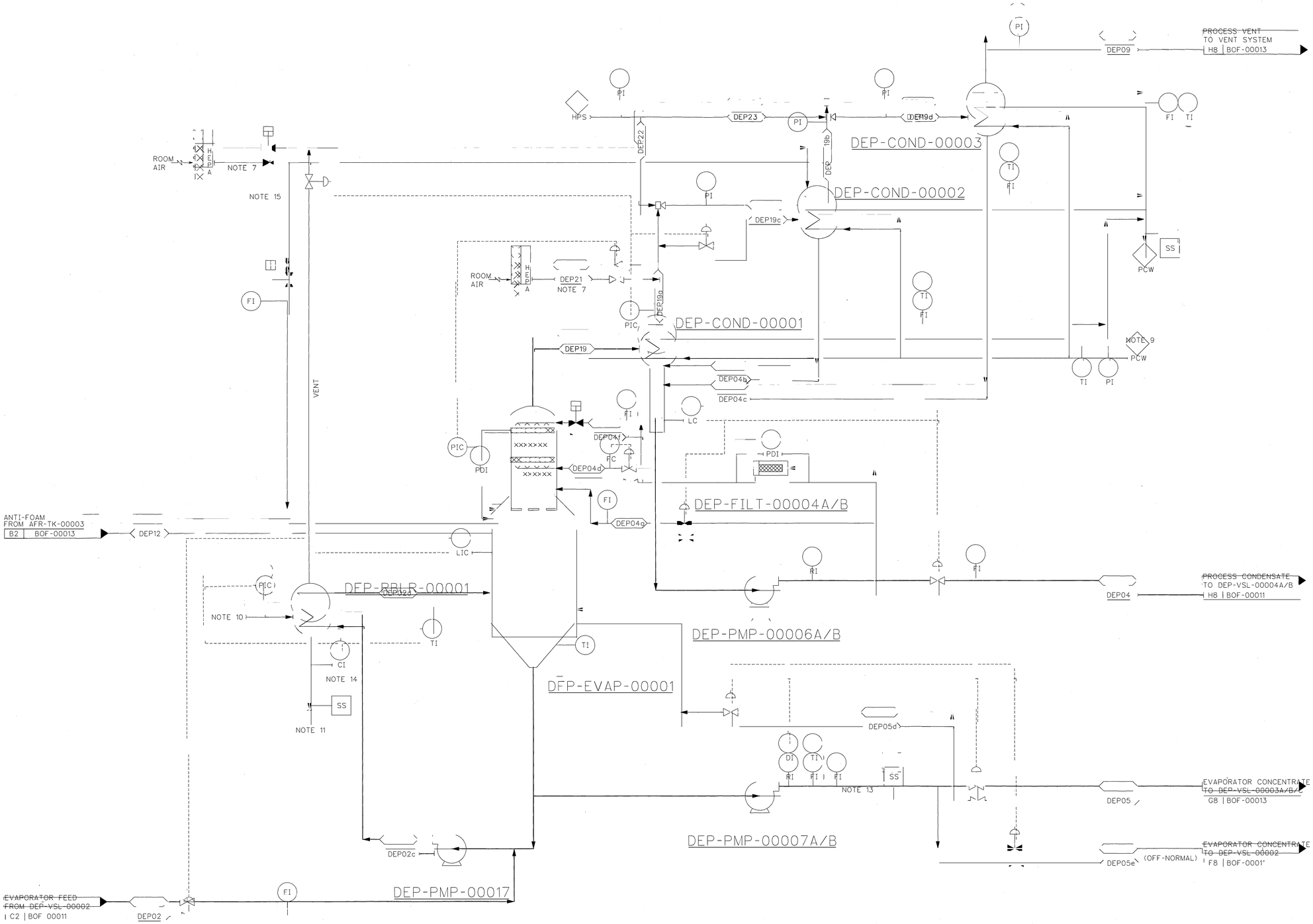

NOTES:

1. SEE DRAWING 24590-WTP-M5-V17T-00001 FOR GENERAL NOTES AND SYMBOLS AND LEGEND.
2. CONTENTS OF THIS DOCUMENT ARE DANGEROUS WASTE PERMIT AFFECTING.
3. ONLY MAJOR INDICATION AND CONTROL INSTRUMENTATION SHOWN.
4. STREAM TABLES FOR SYSTEMS DEP AND DVP PROVIDED ON 24590-BOF-M3-V17T-00001001 AND -00001002.
5. DEP-FILT-00004A/B REQUIRES CONTAMINATED SOLID MATTER DISPOSAL.
6. SECONDARY STEAM LOOP WILL BE PROVIDED TO PREVENT CONTAMINATION OF HPS/SCW SYSTEMS IN STEAM PLANT FACILITY. NOT ALL COMPONENTS ARE SHOWN.
7. IN-BLEED IS PROVIDED FOR PRESSURE CONTROL IN EVAPORATOR.
8. IN-BLEED IS PROVIDED AS VACUUM BREAK.
9. SECONDARY COOLING LOOP WILL BE PROVIDED TO PREVENT CONTAMINATION OF BOF PCW SYSTEM, NOT ALL COMPONENTS ARE SHOWN.
10. PROVIDE SATURATED LOW PRESSURE STEAM AT 13.0 PSIA FROM A DEDICATED OR SECONDARY STEAM SYSTEM. SECONDARY STEAM CHEST CONNECTED TO SAME VACUUM SOURCE AS DEP-RBLR 00001.
11. CONDENSATE RETURN TO A DEDICATED OR SECONDARY STEAM SYSTEM TO PREVENT POSSIBLE CONTAMINATION OF BOF HPS SYSTEM.
12. CONDENSATE FROM DEP-COND-00001 WILL BE RECYCLED WHEN EVAPORATOR IS IN REFLUX MODE. REFLUX MODE MAY BE INITIATED BY HIGH ACTIVITY.
13. TWO FLOW INDICATORS REQUIRED: ONE MAGNETIC FLOW METER AND ONE CORIOLIS METER. PROVIDES REAL-TIME DENSITY MEASUREMENT.
14. CONDUCTIVITY INDICATOR SERVES AS RADIATION MONITOR.
15. PROVIDE PURGE AIR FOR LONG TERM EVAPORATOR SHUTDOWN.

HOLD/OPEN ITEMS:

1. VENDOR TO DETERMINE FINAL EQUIPMENT SIZING.

REFERENCES:

1. 24590-BOF-3ZD-25-00001, WTP DIRECT FEED LOW ACTIVITY WASTE (DFLAW) FACILITY AND SYSTEM DESIGN DESCRIPTIONS.
2. 24590-WTP-RPT-PR-01-008, PROCESS STREAM NUMBERS.
3. 24590-WTP-RPT-ENG-02-009, SYSTEM AND AREA LOCATORS LIST AND SYSTEM DIVISION OF RESPONSIBILITY.
4. 24590-WTP-RPT-ENG-02-010, COMPONENT IDENTIFIERS LIST.
5. 24590-BOF-MEC-DEP-00001, DFLAW EMF PROCESS SYSTEM (DEP) EVAPORATOR OPERATING CONDITIONS, HEATING/ COOLING DUTY, AND UTILITY REQUIREMENTS.

Please note that source, special nuclear, and byproduct materials, as defined in the Atomic Energy Act of 1954 (AEA) are regulated at the U. S. Department of Energy (DOE) facilities exclusively by DOE acting pursuant to its AEA authority. DOE asserts that pursuant to AEA, it has sole and exclusive responsibility and authority to regulate source, special nuclear, and byproduct materials at DOE-owned nuclear facilities. Information contained herein on radionuclides is provided for process description purposes only.

REV	DESCRIPTION	ORG	CHKD	RVWD	APVD	DATE
0	ISSUED FOR DESIGN	DSC				3/24/16

REVISION HISTORY

ISSUED BY RPP-WTP PDC ISSUE STAMP

	BY	DATE
ORIGINATOR		3/24/16
CHECKER		3/24/16
APPROVER		3/24/16
REVIEWER	N/A	

CONTENT APPLICABLE TO ALARA? [X] YES [ ] NO
ADR NO. 24590-BOF-ADR-PR-15-0001 REV 0

RIVER PROTECTION PROJECT
WASTE TREATMENT PLANT
2435 STEVENS CENTER PLACE
RICHLAND, WA 99354

PROJECT No. 24590
SITE HANFORD
AREA 200E
BUILDING No. 25
CONTRACT No: DE-AC27-01RV14136

PROCESS FLOW DIAGRAM DIRECT FEED EFFLUENT EVAPORATOR (SYSTEM DEP)

SCALE: NONE
DRAWING NO. 24590-BOF-M5-V17T-00012
REV 0

"E" SIZE - 44x34
COMPUTER GENERATED - MANUAL DESIGN CHANGES NOT PERMITTED
R11777524

FORM E_SDN.DGN 02/2009

3/18/2016 3:09:07 PM
PLOTTED BY caleni
c:\wtp\dgn\24590bof25225\24590-BOF-M5-V17T-00012.dgn

PLANT ITEM NUMBER	AFR-TK-00003	SNR-PMP-00022	SNR-TK-00002	SHR-TK-00013	SHR-PMP-00025	AFR-PMP-00014A/B	DEP-VSL-00003A/B/C	DEP-PMP-00003A/B	DVP-HTR-00001A/B	DVP-HEPA-00003A/B	DVP-HEPA-00004A/B	DVP-EXHR-00001A/B	DEP-HX-00001
DESCRIPTION	ANTI-FOAM REAGENT TOTE	SODIUM NITRITE PUMP	SODIUM NITRITE TANK (40 WT%)	CAUSTIC TANK (5M NAOH)	CAUSTIC TRANSFER PUMP	ANTI-FOAM METERING PUMPS	EVAPORATOR CONCENTRATE VESSELS	EVAPORATOR CONCENTRATE TRANSFER/RECIRC PUMPS	PROCESS VENTILATION PREHEATERS	PROCESS VENTILATION PRIMARY HEPA FILTERS	PROCESS VENTILATION SECONDARY HEPA FILTERS	PROCESS VENTILATION EXHAUSTERS	EVAP CONCENTRATE/FEED LAW EFFLUENT COOLER
BATCH VOLUME CAPACITY/DUTY	265 GAL NOTE 13	20 GPM HOLD 1	23500 GAL HOLD 1	12500 GAL HOLD 1	100 GPM HOLD 1	1.6 GPM HOLD 2	7600 GAL	88 GPM HOLD 3 NOTE 11	160 ACFM	165 CFM	170 ACFM	170 ACFM	HOLD 1

VENT HEADER FROM DEP-VSL-00005A/B — G2 | BOF-00014 — DEP14

PROCESS VENT FROM DEP-COND-00003 — G2 | BOF-00012 — DEP09

VENT HEADER FROM DEP-VSL-00004A/B — H2 | BOF-00011 — DEP06

VENT HEADER FROM DEP-VSL-00002 — E2 | BOF-00011 — DEP07

VENT HEADER FROM DEP-VSL-00001 — C2 | BOF-00011 — DEP08

EVAPORATOR CONCENTRATE FROM DEP-EVAP-00001 — C2 | BOF-00012 — DEP05

SOLIDS FLUSH FROM DEP-FILT-00003 — C2 | BOF-00011 — DEP03b

DEP15

DVP-HTR-00001A — DEP16 — DVP-HEPA-00003A — DVP-HEPA-00004A — DEP17 — DVP-EXHR-00001A — DEP18 — ATM

DVP-HTR-00001B — DVP-HEPA-00003B — DVP-HEPA-00004B — DVP-EXHR-00001B

DEP24

DEP11a

DEP-VSL-00003A/B/C — NOTE 9

DEP13g — NOTE 8 (OFF-NORMAL) — ALTERNATE DISPOSAL ROUTE — NOTE 6

DEP13 — EFFLUENT CONCENTRATE TO LCP-VSL-00001 — F8 | LAW-00001

EFFLUENT CONCENTRATE TO LCP-VSL-00002 — F8 | LAW-00002

DEP13f

DEP11c

DEP13c — (OFF-SPEC RECYCLE) — EFFLUENT CONCENTRATE TO DEP-FILT-00003 — E8 | BOF-00011

NOTE 10

DIW — NOTE 7

DEP-PMP-00003A/B

NOTE 5

DEP-HX-00001 — DEP13e — EFFLUENT CONCENTRATE TO AP VALVE PIT — NOTE 6

FILTERED CONCENTRATE FROM DEP-FILT-00003 — C2 | BOF-00011 — DEP13d (OFF-NORMAL)

RETURNS TO TANK FARM FROM DEP-VSL-00002 — D2 | BOF-00011 — DEP02b (OFF-NORMAL)

PROCESS CONDENSATE FROM DEP-VSL-00005A/B — F2 | BOF-00014 — DEP20c (OFF-NORMAL)

NOTE 12 — SNR-TK-00002 — SNR-PMP-00022 — DEP10

NOTE 12 — SHR-TK-00013 — SHR-PMP-00025

DEP11 — CAUSTIC TO DEP-VSL-00002 — F8 | BOF-00011

AFR-TK-00003 — AFR-PMP-00014A/B

DEP12 — ANTI-FOAM TO DEP-EVAP-00001 — D8 | BOF-00012

NOTES:

1. SEE DRAWING 24590-WTP-M5-V17T-00001 FOR GENERAL NOTES AND SYMBOLS AND LEGEND.
2. CONTENTS OF THIS DOCUMENT ARE DANGEROUS WASTE PERMIT AFFECTING.
3. ONLY MAJOR INDICATION AND CONTROL INSTRUMENTATION SHOWN.
4. STREAM TABLES FOR SYSTEMS DEP AND DVP PROVIDED ON 24590-BOF-M3-V17T-00001001 AND -00001002.
5. PROVIDE SECONDARY COOLING LOOP TO PREVENT CONTAMINATION OF BOF PCW SYSTEM. NOT ALL COMPONENTS ARE SHOWN.
6. STREAMS TO/FROM CURRENTLY DO NOT HAVE PROCESS FLOW DIAGRAMS.
7. PROVIDE SUFFICIENT FLOW OF PROCESS CONDENSATE (PREFERRED) OR DIW FOR FLUSHING OF TRANSFER LINE.
8. PROVIDE ALTERNATIVE ROUTE TO TRUCK LOADING STATION OR OTHER MEANS OF DISPOSAL. CURRENTLY NO PROCESS FLOW DIAGRAM FOR ALTERNATE DISPOSAL ROUTE.
9. OVERFLOW TO LOW POINT DRAIN VESSEL, DEP-VSL-00001.
10. PROVIDE LOW POINT DRAIN CONNECTION TO DEP-VSL-00001 FOR TRANSFER LINES.
11. BATCH TRANSFER RATE IS 88 GPM. REQUIRED RECIRCULATION RATE TO BE DETERMINED BY VENDOR. SEE HOLD/OPEN ITEMS.
12. PROVIDE SNR-TK-00002 AND SHR-TK-00013 WITH FREEZE PROTECTION FOR LONG TERM OUTDOOR STORAGE. MAINTAIN SNR-TK-00002 CONTENTS AT A MINIMUM 60°F AND SHR-TK-00013 AT A MINIMUM 40°F.
13. ANTI-FOAM REAGENT TOTE SIZING BASED ON STANDARD SUPPLIER INVENTORY.

HOLD/OPEN ITEMS:

1. EQUIPMENT SIZING ON HOLD PENDING RESOLUTION OF ICD 31 CHEMICAL ADDITIONS REQUIREMENTS.
2. CURRENT SIZING BASED ON CRITICAL VELOCITY IN 0.5 INCH LINE. PUMP RATE TO BE DETERMINED BY PUMP SIZING CALCULATION.
3. PUMP SIZING FOR RECIRCULATION RATE TO BE DETERMINED BY VENDOR.

REFERENCES:

1. 24590-BOF-3ZD-25-00001, WTP DIRECT FEED LOW ACTIVITY WASTE (DFLAW) FACILITY AND SYSTEM DESIGN DESCRIPTIONS.
2. 24590-WTP-RPT-PR-01-008, PROCESS STREAM NUMBERS.
3. 24590-WTP-RPT-ENG-02-009, SYSTEM AND AREA LOCATORS LIST AND SYSTEM DIVISION OF RESPONSIBILITY.
4. 24590-WTP-RPT-ENG-02-010, COMPONENT IDENTIFIERS LIST.
5. 24590-WTP-ICD-MG-01-031, ICD 31-INTERFACE CONTROL DOCUMENT FOR DFLAW EFFLUENT RETURNS TO DOUBLE SHELL TANKS.
6. 24590-BOF-MVC-DEP-00009, BATCH SIZING CALCULATION FOR DEP (DIRECT FEED LAW EFFLUENT MANAGEMENT FACILITY PROCESS SYSTEM) VESSELS: DEP-VSL-00001, -00002, -00003A/B/C, -00004A/B, -00005A/B.
7. 24590-BOF-MVC-DEP-00010, PROCESS DATA FOR THE EVAPORATOR CONCENTRATE VESSELS, DEP-VSL-00003A/B/C, AND PUMPS, DEP-PMP-00003A/B.
8. 24590-BOF-M6C-DVP-00001, DFLAW EMF VESSEL VENT PROCESS SYSTEM (DVP) LINE SIZING.

Please note that source, special nuclear, and byproduct materials, as defined in the Atomic Energy Act of 1954 (AEA) are regulated at the U. S. Department of Energy (DOE) facilities exclusively by DOE acting pursuant to its AEA authority. DOE asserts that pursuant to AEA, it has sole and exclusive responsibility and authority to regulate source, special nuclear, and byproduct materials at DOE-owned nuclear facilities. Information contained herein on radionuclides is provided for process description purposes only.

REV	DESCRIPTION	ORG	CHKD	RVWD	APVD	DATE
0	ISSUED FOR DESIGN	DJC	SN	N/A		3/24/16

REVISION HISTORY

ISSUED BY RPP-WTP PDC ISSUE STAMP

PROJECT No.	24590	
SITE	HANFORD	
AREA	200E	
BUILDING No.	25	
BY		DATE
ORIGINATOR	Boyd D Grosvenor	3/24/16
CHECKER		3/24/16
APPROVER		3/24/16
REVIEWER	N/A	

CONTENT APPLICABLE TO ALARA? [X] YES [ ] NO
ADR NO. 24590-BOF-ADR-PR-15-0001 REV: 0

BECHTEL
RIVER PROTECTION PROJECT
WASTE TREATMENT PLANT
2435 STEVENS CENTER PLACE
RICHLAND, WA 99354

CONTRACT No: DE-AC27-01RV14136

PROCESS FLOW DIAGRAM DIRECT FEED CONCENTRATE TRANSFER (SYSTEM DEP AND DVP)

SCALE: NONE

24590-BOF-M5-V17T-00013 REV 0

"E" SIZE - 44x34
COMPUTER GENERATED - MANUAL DESIGN CHANGES NOT PERMITTED

R11777525

3/18/2016 3:11:39 PM

PLOTTED BY: tcsenvc C:\work\tcsenvc\dms25225\24590-BOF-M5-V17T-00013

FORM E_SDN.DGN 02/2009

TAG # / DESCRIPTION/NAME	DEP-VSL-00005A/B PROCESS CONDENSATE LAG STORAGE VESSELS	DEP-PMP-00015A/B/C PROCESS CONDENSATE LAG STORAGE VESSEL RECIRCULATION PUMPS	DEP-PMP-00005A/B PROCESS CONDENSATE LAG STORAGE VESSEL TRANSFER PUMPS	DEP-FILT-00002 PROCESS CONDENSATE FILTER
BATCH VOLUME CAPACITY/DUTY	89200 GAL.	HOLD 1	170 GPM NOTE 11	170 GPM 5 MICRON NOTE 11

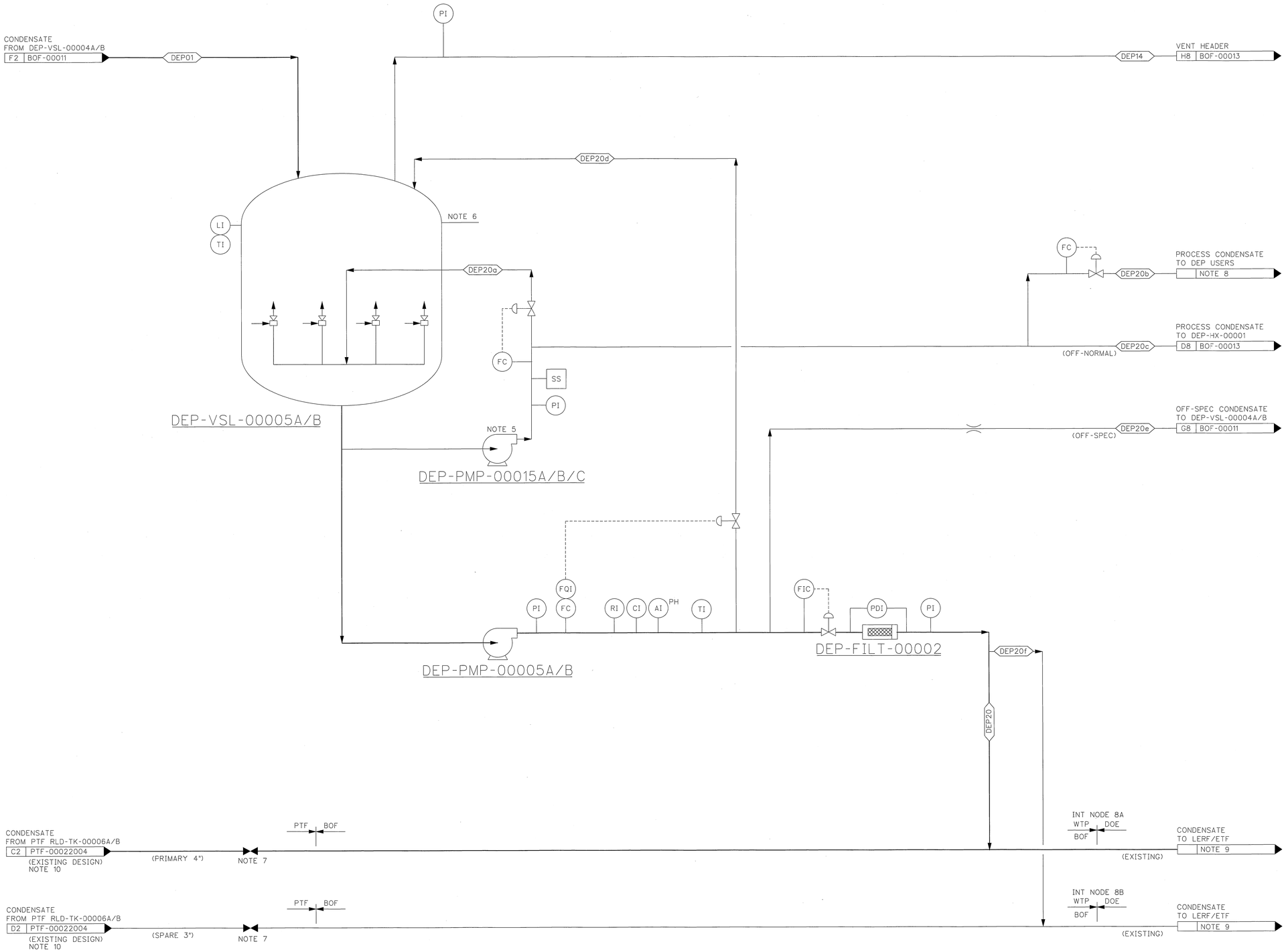

NOTES:

1. SEE DRAWING 24590-WTP-M5-V17T-00001 FOR GENERAL NOTES AND SYMBOLS AND LEGEND.
2. CONTENTS OF THIS DOCUMENT ARE DANGEROUS WASTE PERMIT AFFECTING.
3. ONLY MAJOR INDICATION AND CONTROL INSTRUMENTATION SHOWN.
4. STREAM TABLES FOR SYSTEMS DEP AND DVP PROVIDED ON 24590-BOF-M3-V17T-00001001 AND -00001002.
5. DEP-PMP-00015A/B/C RATED FOR 2X50% OPERATIONS.
6. OVERFLOW TO LOW POINT DRAIN VESSEL, DEP-VSL-00001.
7. FEED FROM PTF RLD-TK-00006A/B WILL HAVE POSITIVE ISOLATION.
8. PROCESS CONDENSATE USERS INCLUDE: DEP-FILT-00003/VARIOUS PIPELINE AND PUMP FLUSHES.
9. PIPELINES TO/FROM CURRENTLY DO NOT HAVE PROCESS FLOW DIAGRAMS.
10. PTF DRAWINGS WILL BE UPDATED ACCORDINGLY WHEN PTF DESIGN RECOMMENCES.
11. DEP-PMP-00005A/B AND DEP-FILT-00002 FLOW RATES BASED ON MAXIMUM ALLOWABLE FLOW RATE OF 170 GPM TO LERF/ETF PER ICD-06. FINAL DEP-PMP-00005A/B AND DEP-FILT-00002 SIZING MAY DIFFER DUE TO PRESSURE LIMITATIONS OF DOWNSTREAM PIPING.

HOLD/OPEN ITEMS:

1. PUMP SIZING FOR RECIRCULATION RATE TO BE DETERMINED BY VENDOR.

REFERENCES:

1. 24590-BOF-3ZD-25-00001, WTP DIRECT FEED LOW ACTIVITY WASTE (DFLAW) FACILITY AND SYSTEM DESIGN DESCRIPTIONS.
2. 24590-WTP-RPT-PR-01-008, PROCESS STREAM NUMBERS.
3. 24590-WTP-RPT-ENG-02-009, SYSTEM AND AREA LOCATORS LIST AND SYSTEM DIVISION OF RESPONSIBILITY.
4. 24590-WTP-RPT-ENG-02-010, COMPONENT IDENTIFIERS LIST.
5. 24590-WTP-ICD-MG-01-006, ICD 06-INTERFACE CONTROL DOCUMENT FOR RADIOACTIVE, DANGEROUS LIQUID EFFLUENTS.
6. 24590-BOF-MVC-DEP-00009, BATCH SIZING CALCULATION FOR DEP (DIRECT FEED LAW EFFLUENT MANAGEMENT FACILITY PROCESS SYSTEM) VESSELS: DEP-VSL-00001, -00002, -00003A/B/C, -00004A/B, -00005A/B.
7. 24590-BOF-MVC-DEP-00008, PROCESS DATA FOR THE PROCESS CONDENSATE LAG STORAGE VESSELS (DEP-VSL-00005A/B), TRANSFER PUMPS (DEP-PMP-00005A/B), AND RECIRCULATION PUMPS (DEP-PMP-00015A/B/C).

Please note that source, special nuclear, and byproduct materials, as defined in the Atomic Energy Act of 1954 (AEA) are regulated at the U. S. Department of Energy (DOE) facilities exclusively by DOE acting pursuant to its AEA authority. DOE asserts that pursuant to AEA, it has sole and exclusive responsibility and authority to regulate source, special nuclear, and byproduct materials at DOE-owned nuclear facilities. Information contained herein on radionuclides is provided for process description purposes only.

REV	DESCRIPTION	ORG	CHKD	RVWD	APVD	DATE
0	ISSUED FOR DESIGN	DJC	SN	N/A	[illegible]	3/24/16

REVISION HISTORY

ISSUED BY RPP-WTP PDC (ISSUE STAMP)		
	PROJECT No.	24590
	SITE	HANFORD
	AREA	200E
	BUILDING No.	25

	BY	DATE
ORIGINATOR	Daniel J. Chereau	3/24/16
CHECKER	[illegible]	3/24/16
APPROVER	[illegible]	3/24/16
REVIEWER	N/A	

CONTENT APPLICABLE TO ALARA? [X] YES [ ] NO
ADR NO. 24590-BOF-ADR-PR-15-0001 REV: 0

BECHTEL
RIVER PROTECTION PROJECT
WASTE TREATMENT PLANT
2435 STEVENS CENTER PLACE
RICHLAND, WA 99354

CONTRACT No: DE-AC27-01RV14136

PROCESS FLOW DIAGRAM DIRECT FEED PROCESS CONDENSATE TRANSFER (SYSTEM DEP)

SCALE: NONE

24590-BOF-M5-V17T-00014

REV 0

R11777529

3/18/2016 3:13:37 PM

PLOTTED BY: tcsonvic

c:\work\tcsonvic\dms2525\24590-BOF-M5-V17T-00014.dgn

FORM E_SDN.DGN 02/2009

"E" SIZE - 44x34
COMPUTER GENERATED - MANUAL DESIGN CHANGES NOT PERMITTED

DEP-NOZ-00001
LOW POINT DRAIN VESSEL SPRAY NOZZLE
95 GPM @ 80 PSIG SUPPLY PRESSURE

DEP-NOZ-00011
LOW POINT DRAIN VESSEL SPRAY NOZZLE
95 GPM @ 80 PSIG SUPPLY PRESSURE

DEP-PMP-00001A
LOW POINT DRAIN VESSEL PUMP
56 GPM @ 173 FT TDH
30 HP

DEP-PMP-00001B
LOW POINT DRAIN VESSEL PUMP
56 GPM @ 173 FT TDH
30 HP

DEP-SUMP-00001
LOW POINT DRAIN VESSEL SUMP
SUMP CAP 58 GAL
24 IN ID X 30 IN DEEP

DEP-PMP-00031
LOW POINT DRAIN VESSEL SUMP PUMP
AIR POWERED DIAPHRAGM
45 GPM @ 165 FT TDH
60 SCFM@60PSIG AIR SUPPLY

DEP-HOOD-00001
NOTE 9
BECHTEL VENDOR

DEP-VSL-00001

NOTES:

1. SEE DRAWINGS 24590-WTP-M6-50-00001 THROUGH 24590-WTP-M6-50-00008 FOR GENERAL NOTES, SYMBOLS AND LEGEND, AND GENERAL SLOPE REQUIREMENTS.
2. CONTENTS OF THIS DOCUMENT ARE DANGEROUS WASTE PERMIT AFFECTING.
3. THE PRESSURE BOUNDARY FOR ALL COMPONENTS ON THIS DRAWING IS QUALITY LEVEL CM AND SEISMIC CATEGORY SC-IV, UNLESS OTHERWISE NOTED.
4. ALL LINES SHOWN ON THIS DRAWING SHALL BE FREE DRAINING, UNLESS OTHERWISE NOTED.
5. FUNCTION CONVERTS TANK LEVEL IN INCHES TO GALLONS.
6. SPOOL PIECE TO FACILITATE SPRAY NOZZLE REMOVAL.
7. STANDPIPE TO BE INSTALLED FROM 1/2" OFF OF THE BOTTOM OF SUMP TO 3 FEET ABOVE THE SUMP.
8. LOCATE SPRAY NOZZLES ON OPPOSITE SIDES OF VESSEL.
9. SAMPLE FUME HOOD (DEP-HOOD-00001) DETAILS SHOWN ON 24590-BOF-MO-DEP-00001.
10. VALVE BODY SHALL BE INSTALLED IN THE HORIZONTAL POSITION. LOCATE AS CLOSE AS POSSIBLE TO DEP-FILT-00003.
11. FOR CONNECTION TO LOCAL DIW UTILITY STATION FOR FLUSHING.
12. LOCATE FLUSH CONNECTION ON THE TOP OF THE PROCESS PIPE.
13. A DRAIN CONNECTION WITH DRAIN VALVE SHALL BE PROVIDED ON THE PUMP CASING.
14. 24590-BOF-DGCE-MS-16-00004 APPROVES THE USE OF BALL VALVES FOR INSTRUMENT ROOT VALVES.
15. PRESSURE OF CONNECTION UTILITY NOT TO EXCEED 50 PSIG DESIGN PRESSURE.
16. LOCATE VALVE CLOSE TO DEP-HOOD-00001.
17. STANDPIPE PROVIDED BY VESSEL VENDOR FOR LEVEL PROBE.
18. LINE NUMBER IS PROVIDED ONLY FOR PLANT DESIGN TO CREATE ISO CONNECTING HARDWARE FOR LT-8109 TO VESSEL NOZZLE.

HOLD/OPEN ITEMS:

1. OVERFLOW AND LOOP SEAL ON HOLD PENDING DESIGN CHANGE FOR DIPPED OVERFLOW AND BASIS CALCULATION.
2. DEP-NOZ-00001/-00011 CONFIGURATION AND FLOW CONDITIONS ON HOLD. THIS HOLD WILL BE RELEASED WHEN VENDOR INFORMATION IS RECEIVED.
3. OFF-SHEET CONNECTOR QUADRANT AND LINE NUMBER ARE ON HOLD PENDING REVISION OF CONNECTING P&ID AND REVISION OF 24590-BOF-M6C-DIW-00006.
4. RELIEF VALVES ON HOLD, HOLD WILL BE RELEASED WHEN CALCULATIONS DETERMINING RELIEF VALVE SIZING IS ISSUED.
5. PENDING CLOSURE OF APPROPRIATE ACTIONS IN 24590-WTP-ATS-MGT-16-0012.
6. LINE SIZE ON HOLD PENDING REVISION OF 24590-BOF-MPC-DEP-00002 TO INCLUDE THIS ROUTE.
7. LINE NUMBER ON HOLD PENDING ISSUANCE OF CONNECTION P&ID 24590-BOF-M6-DEP-00011001.
8. OFF-SHEET CONNECTOR QUADRANT AND LINE NUMBER ARE ON HOLD PENDING REVISION OF CONNECTING P&ID AND REVISION OF 24590-BOF-M6C-PSA-00013.

REFERENCES:

1. 24590-BOF-3ZD-25-00001, WTP DIRECT FEED LOW ACTIVITY WASTE (DFLAW) FACILITY AND SYSTEM DESCRIPTIONS.

PLEASE NOTE THAT SOURCE, SPECIAL NUCLEAR AND BYPRODUCT MATERIALS AS DEFINED IN THE ATOMIC ENERGY ACT OF 1954 (AEA) ARE REGULATED AT THE U.S. DEPARTMENT OF ENERGY (DOE) FACILITIES EXCLUSIVELY BY DOE ACTING PURSUANT TO ITS AEA AUTHORITY DOE ASSERTS THAT PURSUANT TO THE AEA IT HAS SOLE AND EXCLUSIVE RESPONSIBILITY AND AUTHORITY TO REGULATE SOURCE, SPECIAL NUCLEAR AND BYPRODUCT MATERIALS AT DOE-OWNED NUCLEAR FACILITIES. INFORMATION CONTAINED HEREIN ON RADIONUCLIDES IS PROVIDED FOR PROCESS DESCRIPTION PURPOSES ONLY.

CM
QUALITY DESIGNATOR

REVISION HISTORY

REV	DESCRIPTION	ORG	CHKD	RVWD	APVD	DATE
0	ISSUED FOR CONSTRUCTION	SS	BNV	BSF	BPV	3/24/16

ISSUED BY RPP-WTP PDC
ISSUE STAMP

	BY	DATE
ORIGINATOR	Steven Stern	3/22/16
CHECKER	[illegible]	3/23/16
APPROVER	[illegible]	3/23/16
REVIEWER	[illegible]	3/23/16
APPROVER	[illegible]	3/24/16

CONTENT APPLICABLE TO ALARA? [X] YES [ ] NO
ADR NO. 24590-WTP-ADR-M-16-0001 REV: 1

PROJECT No. 24590
SITE HANFORD
AREA 200E
BUILDING No. 25A

RIVER PROTECTION PROJECT
WASTE TREATMENT PLANT
2435 STEVENS CENTER PLACE
RICHLAND, WA 99354

CONTRACT No: DE-AC27-01RV14136

P&ID - BOF/EMF DIRECT FEED LAW EMF PROCESS SYSTEM LOW POINT DRAIN VESSEL PUMPS DEP-PMP-00001A/B

SCALE: NONE
24590-BOF-M6-DEP-00001002
REV 0

'E' SIZE - 44x34
COMPUTER GENERATED - MANUAL DESIGN CHANGES NOT PERMITTED

R1177703

3/22/2016 10:22:06 AM

PLOTTED BY: jrcochl c:\work\jrcochl\dms2594\BOF\M6\BEP00001002.dgn

FORM E_SDN.DGN 02/2009

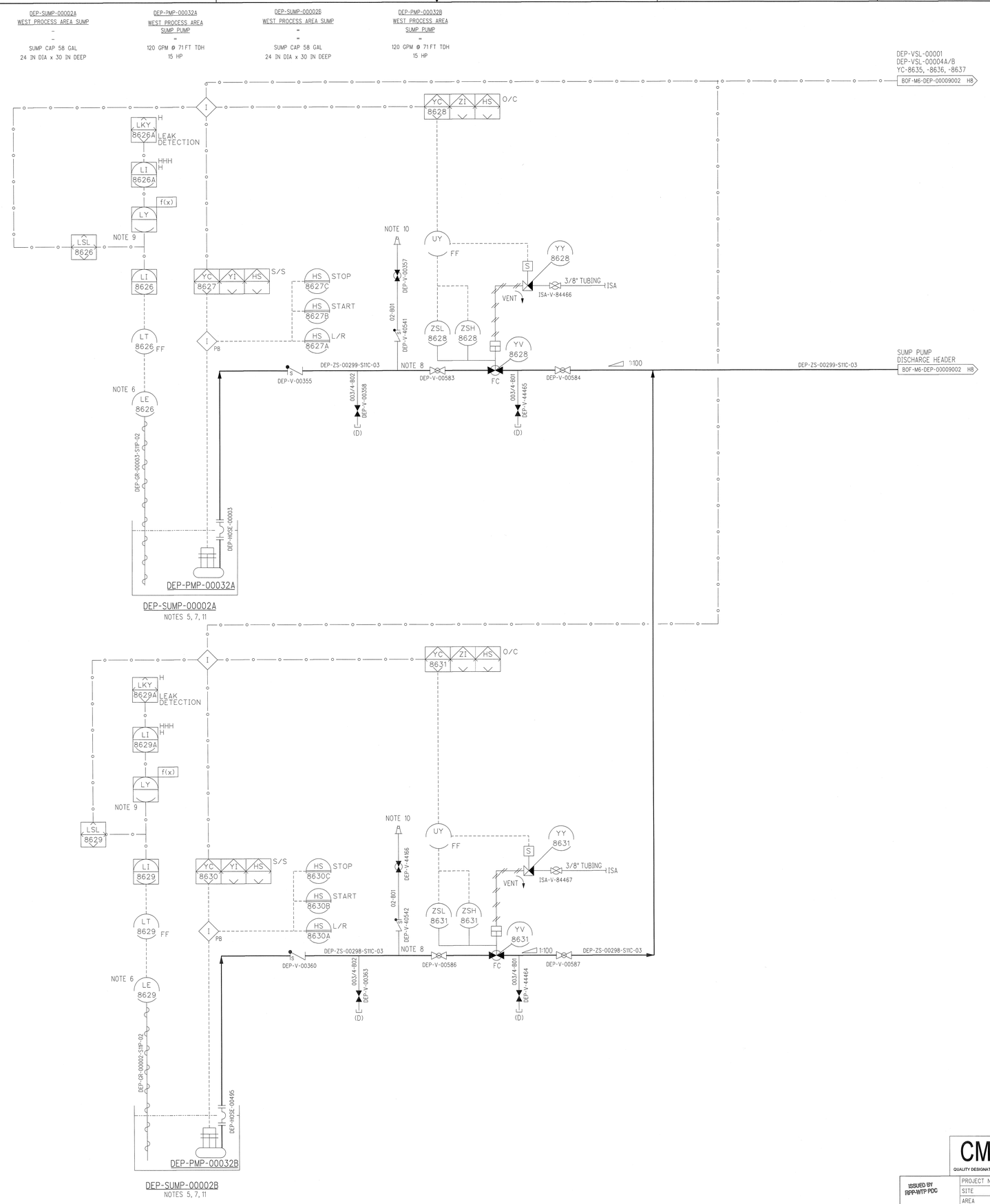

NOTES:

1. SEE DRAWINGS 24590-WTP-M6-50-00001 THROUGH 24590-WTP-M6-50-00008 FOR GENERAL NOTES, SYMBOLS AND LEGEND, AND GENERAL SLOPE REQUIREMENTS.
2. CONTENTS OF THIS DOCUMENT ARE DANGEROUS WASTE PERMIT AFFECTING.
3. THE PRESSURE BOUNDARY FOR ALL COMPONENTS ON THIS DRAWING IS QUALITY LEVEL CM AND SEISMIC CATEGORY SC-IV, UNLESS OTHERWISE NOTED.
4. ALL LINES SHOWN ON THIS DRAWING SHALL BE FREE DRAINING, UNLESS OTHERWISE NOTED.
5. FOR THE PURPOSES OF ALARA, THE SUMP PUMPS IN ROOM E-0103 (C5) SHALL BE STARTED WITHIN 30 MINUTES OF LEAK DETECTION TO PREVENT EFFLUENT FROM SPILLING INTO ROOM E-0102 (C3).
6. STANDPIPE TO BE INSTALLED FROM 1/2" OFF OF THE BOTTOM OF THE SUMP TO 3.6 FEET ABOVE THE SUMP.
7. LOCATE IN WEST SIDE OF PROCESS AREA (E-0103).
8. LOCATE FLUSH CONNECTION AT THE TOP OF THE PROCESS PIPE, AS CLOSE AS POSSIBLE TO THE CHECK VALVE.
9. FUNCTION CONVERTS SUMP LEVEL IN INCHES TO GALLONS.
10. FOR CONNECTION TO LOCAL DIW UTILITY STATION FOR FLUSHING.
11. SUMP SHALL BE FLAT BOTTOM SUMP.

HOLD/OPEN ITEMS:

NONE

REFERENCES:

1. 24590-BOF-3ZD-25-00001, WTP DIRECT FEED LOW ACTIVITY WASTE (DFLAW) FACILITY AND SYSTEM DESIGN DESCRIPTIONS.

PLEASE NOTE THAT SOURCE, SPECIAL NUCLEAR AND BYPRODUCT MATERIALS, AS DEFINED IN THE ATOMIC ENERGY ACT OF 1954 (AEA) ARE REGULATED AT THE U.S. DEPARTMENT OF ENERGY (DOE) FACILITIES EXCLUSIVELY BY DOE ACTING PURSUANT TO ITS AEA AUTHORITY. DOE ASSERTS THAT PURSUANT TO THE AEA IT HAS SOLE AND EXCLUSIVE RESPONSIBILITY AND AUTHORITY TO REGULATE SOURCE, SPECIAL NUCLEAR AND BYPRODUCT MATERIALS AT DOE-OWNED NUCLEAR FACILITIES. INFORMATION CONTAINED HEREIN ON RADIONUCLIDES IS PROVIDED FOR PROCESS DESCRIPTION PURPOSES ONLY.

DRAWING INDEX	
DWG NO	TITLE
24590-BOF-M6-DEP-00009001	DEP SYSTEM PROCESS AREA SUMPS DEP-SUMP-00002A/B
24590-BOF-M6-DEP-00009002	DEP SYS PROCESS VESSEL AREA SUMPS DEP-SUMP-00004A/B
24590-BOF-M6-DEP-00009003	DEP SYSTEM MISC SUMPS DEP-SUMP-00008
24590-BOF-M6-DEP-00009004	DEP SYSTEM PROCESS AREA SUMPS DEP-SUMP-00003A/B
24590-BOF-M6-DEP-00009005	DEP SYS PROCESS VESSEL AREA SUMPS DEP-SUMP-00005A/B

CM QUALITY DESIGNATOR

REV	DESCRIPTION	ORG	CHKD	RVWD	APVD	DATE
0	ISSUED FOR CONSTRUCTION	JJO	RP	BPV	[illegible]	3/24/16

REVISION HISTORY

ISSUED BY RPP-WTP PDC

ISSUE STAMP

	PROJECT No.	24590
	SITE	HANFORD
	AREA	200E
	BUILDING No.	25

	BY	DATE
ORIGINATOR	Steven Nguyen	3/23/16
CHECKER	Robert Prater	3/23/16
APPROVER	Douglas Bowen	3/23/16
REVIEWER	[illegible]	3/22/16
APPROVER	[illegible]	3/24/16

CONTENT APPLICABLE TO ALARA? [X] YES [ ] NO
ADR NO. 24590-WTP-ADR-M-16-0001 REV: 1

BECHTEL

RIVER PROTECTION PROJECT
WASTE TREATMENT PLANT
2435 STEVENS CENTER PLACE
RICHLAND, WA 99354

CONTRACT No: DE-AC27-01RV14136

P&ID - BOF / EMF
DIRECT FEED LAW EMF PROCESS SYSTEM PROCESS AREA SUMPS DEP-SUMP-00002A/B

SCALE: NONE

24590-BOF-M6-DEP-00009001 REV 0

"E" SIZE - 44x34
COMPUTER GENERATED - MANUAL DESIGN CHANGES NOT PERMITTED

R11777704

3/22/2016 1:15:08 PM

PLOTTED BY: jreech1 c:\work\jreech1\dms2594\BOFM6DEP00009001.dgn

FORM E_SDN.DGN 02/2009

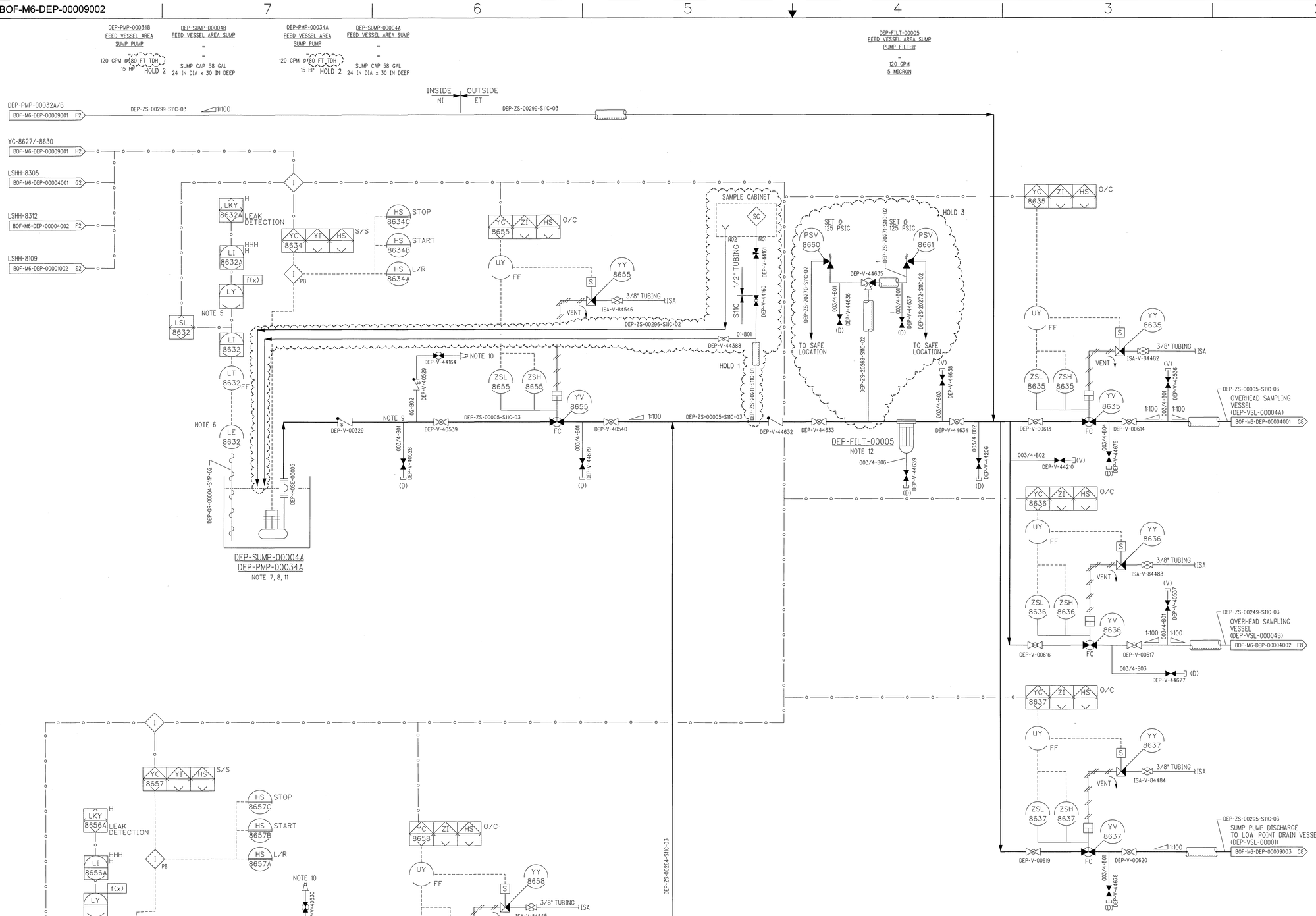

NOTES:

1. SEE DRAWINGS 24590-WTP-M6-50-00001 THROUGH 24590-WTP-M6-50-00008 FOR GENERAL NOTES, SYMBOLS AND LEGEND, AND GENERAL SLOPE REQUIREMENTS.
2. CONTENTS OF THIS DOCUMENT ARE DANGEROUS WASTE PERMIT AFFECTING.
3. THE PRESSURE BOUNDARY FOR ALL COMPONENTS ON THIS DRAWING IS QUALITY LEVEL CM AND SEISMIC CATEGORY SC-IV, UNLESS OTHERWISE NOTED.
4. ALL LINES SHALL BE FREE DRAINING, UNLESS OTHERWISE NOTED.
5. FUNCTION CONVERTS SUMP LEVEL IN INCHES TO GALLONS.
6. STANDPIPE TO BE INSTALLED FROM 1/2" OFF OF THE BOTTOM OF THE SUMP TO 6.4 FEET ABOVE THE SUMP.
7. LOCATE IN THE EVAPORATOR CONCENTRATE VESSEL AREA (E-0105).
8. SUMP CONTENTS ARE SAMPLED PRIOR TO TRANSFER. RAIN AND VOLUME FROM VESSEL FAILURE WILL TRANSFER TO OVERHEAD SAMPLING VESSELS. SMALL LEAKS WILL TRANSFER TO LOW POINT DRAIN VESSEL.
9. LOCATE FLUSH CONNECTION ON THE TOP OF THE PROCESS PIPE AS CLOSE AS POSSIBLE TO THE CHECK VALVE
10. FOR CONNECTION TO LOCAL DIW UTILITY STATION FOR FLUSHING.
11. SUMP SHALL BE FLAT BOTTOM SUMP.
12. FILTER MEDIA TO BE VISUALLY CHECKED SEMI-ANNUALLY AND REPLACED ANNUALLY AT A MINIMUM.

HOLD/OPEN ITEMS:

1. SUMP SAMPLING DESIGN ON HOLD PENDING IDENTIFICATION OF A METHOD OF OBTAINING A SAMPLE WITHOUT REQUIRING THE SUMP PUMP OPERATING. SUMP PUMP MAY REQUIRE MORE LIQUID THEN AVAILABLE WHEN SAMPLE IS REQUIRED. SAMPLE DESIGN SHOULD NOT ALLOW TRANSFER BETWEEN SUMPS.
2. SUMP PUMP TDH ON HOLD UNTIL CALCULATION IS UPDATED TO INCLUDE DEP-FILT-00005.
3. PSV DESIGN ON HOLD PENDING PSV SIZING CALCULATION.

REFERENCES:

1. 24590-BOF-3ZD-25-00001, WTP DIRECT FEED LOW ACTIVITY WASTE (DFLAW) FACILITY AND SYSTEM DESIGN DESCRIPTIONS.

PLEASE NOTE THAT SOURCE, SPECIAL NUCLEAR AND BYPRODUCT MATERIALS, AS DEFINED IN THE ATOMIC ENERGY ACT OF 1954 (AEA) ARE REGULATED AT THE U.S. DEPARTMENT OF ENERGY (DOE) FACILITIES EXCLUSIVELY BY DOE ACTING PURSUANT TO ITS AEA AUTHORITY. DOE ASSERTS, THAT PURSUANT TO THE AEA IT HAS SOLE AND EXCLUSIVE RESPONSIBILITY AND AUTHORITY TO REGULATE SOURCE, SPECIAL NUCLEAR AND BYPRODUCT MATERIALS AT DOE-OWNED NUCLEAR FACILITIES. INFORMATION CONTAINED HEREIN ON RADIONUCLIDES IS PROVIDED FOR PROCESS DESCRIPTION PURPOSES ONLY.

CM
QUALITY DESIGNATOR

REV	DESCRIPTION	ORG	CHKD	RVWD	APVD	DATE
0	ISSUED FOR CONSTRUCTION	SJD	RP	BAV		3/24/16

REVISION HISTORY

ISSUED BY RPP-WTP PDC

ISSUE STAMP

PROJECT No.	24590	
SITE	HANFORD	
AREA	200E	
BUILDING No.	25	

	BY	DATE
ORIGINATOR	Steven Pearson	3/22/16
CHECKER	Robert Pantuso	3/22/16
APPROVER		3/22/16
REVIEWER		3/22/16
APPROVER		3/24/16

CONTENT APPLICABLE TO ALARA? [X] YES [ ] NO
ADR NO. 24590-WTP-ADR-M-16-0001 REV: 1

BECHTEL
RIVER PROTECTION PROJECT
WASTE TREATMENT PLANT
2435 STEVENS CENTER PLACE
RICHLAND, WA 99354

CONTRACT No: DE-AC27-01RV14136

P&ID - BOF / EMF DIRECT FEED LAW EMF PROCESS SYSTEM PROCESS VESSEL AREA SUMPS DEP-SUMP-00004A / B

SCALE: NONE

24590-BOF-M6-DEP-00009002

REV 0

"E" SIZE - 44x34
COMPUTER GENERATED - MANUAL DESIGN CHANGES NOT PERMITTED

R11777705

3/22/2016 11:01:45 AM

FORM E_SDN.DGN 02/2009

PLOTTED BY: jfcecchi

c:\work\jfcecchi\dms25914\BOFM6DEP00009002.dgn

DEP-SUMP-00008	DEP-PMP-00038
TRUCK BAY SUMP	TRUCK BAY SUMP PUMP
"	"
"	"
SUMP CAP 58 GAL 24 IN DIA X 30 IN DEEP	120 GPM @ 58 FT TDH 7.5 HP

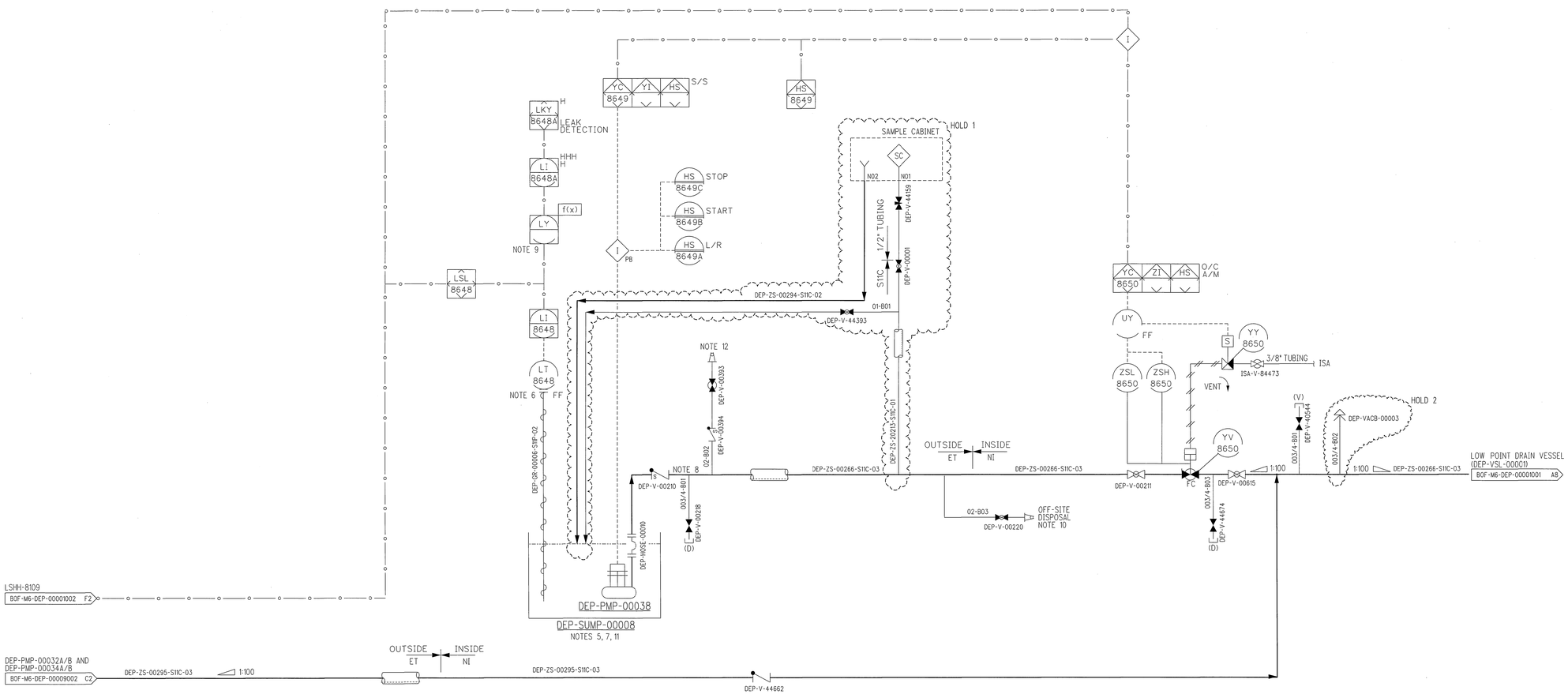

NOTES:

1. SEE DRAWINGS 24590-WTP-M6-50-00001 THROUGH 24590-WTP-M6-50-00008 FOR GENERAL NOTES, SYMBOLS AND LEGEND, AND GENERAL SLOPE REQUIREMENTS.
2. CONTENTS OF THIS DOCUMENT ARE DANGEROUS WASTE PERMIT AFFECTING.
3. THE PRESSURE BOUNDARY FOR ALL COMPONENTS ON THIS DRAWING IS QUALITY LEVEL CM AND SEISMIC CATEGORY SC-IV, UNLESS OTHERWISE NOTED.
4. ALL LINES SHOWN ON THIS DRAWING SHALL BE FREE DRAINING, UNLESS OTHERWISE NOTED.
5. SUMP SHALL BE FLAT BOTTOM SUMP.
6. STANDPIPE TO BE INSTALLED FROM 1/2" OFF OF THE BOTTOM OF THE SUMP TO 3 FEET ABOVE THE SUMP.
7. LOCATE IN THE TRUCK BAY AREA (E-0108).
8. LOCATE FLUSH CONNECTION ON THE TOP OF THE PROCESS PIPE AS CLOSE AS POSSIBLE TO THE CHECK VALVE
9. FUNCTION CONVERTS SUMP LEVEL IN INCHES TO GALLONS.
10. LOCATE ISOLATION VALVE AND QUICK DISCONNECT NEAR OUTSIDE OF BERM FOR CONNECTION TO OFF-SITE DISPOSAL.
11. SUMP CONTENTS ARE SAMPLED PRIOR TO TRANSFER TO ENSURE COMPATIBILITY IN PROCESS. FOR OFF-SITE DISPOSAL OF A SPILL, MANUAL VALVE DEP-V-00220 NEEDS TO BE OPENED AND PUMP STARTED VIA OVERRIDE.
12. FOR CONNECTION TO LOCAL DIW UTILITY STATION FOR FLUSHING.

HOLD/OPEN ITEMS:

1. SUMP SAMPLING DESIGN ON HOLD PENDING IDENTIFICATION OF A METHOD OF OBTAINING A SAMPLE WITHOUT REQUIRING THE SUMP PUMP OPERATING. SUMP PUMP MAY REQUIRE MORE LIQUID THEN AVAILABLE WHEN SAMPLE IS REQUIRED. SAMPLE DESIGN SHOULD NOT ALLOW TRANSFER BETWEEN SUMPS.
2. VACUUM BREAKER ON HOLD PENDING SIZING CALCULATION.

REFERENCES:

1. 24590-BOF-3ZD-25-00001, WTP DIRECT FEED LOW ACTIVITY WASTE (DFLAW) FACILITY AND SYSTEM DESIGN DESCRIPTIONS.

PLEASE NOTE THAT SOURCE, SPECIAL NUCLEAR AND BYPRODUCT MATERIALS, AS DEFINED IN THE ATOMIC ENERGY ACT OF 1954 (AEA) ARE REGULATED AT THE U.S. DEPARTMENT OF ENERGY (DOE) FACILITIES EXCLUSIVELY BY DOE ACTING PURSUANT TO ITS AEA AUTHORITY. DOE ASSERTS, THAT PURSUANT TO THE AEA IT HAS SOLE AND EXCLUSIVE RESPONSIBILITY AND AUTHORITY TO REGULATE SOURCE, SPECIAL NUCLEAR AND BYPRODUCT MATERIALS AT DOE-OWNED NUCLEAR FACILITIES. INFORMATION CONTAINED HEREIN ON RADIONUCLIDES IS PROVIDED FOR PROCESS DESCRIPTION PURPOSES ONLY.

CM
QUALITY DESIGNATOR

REV	DESCRIPTION	ORG	CHKD	RVWD	APVD	DATE
0	ISSUED FOR CONSTRUCTION	SJD	RP	BMV	[illegible]	3/24/16

REVISION HISTORY

ISSUED BY RPP-WTP PDC

ISSUE STAMP

PROJECT No.	24590	
SITE	HANFORD	
AREA	200E	
BUILDING No.	25	

	BY	DATE
ORIGINATOR	Steven Duncan	3/23/16
CHECKER	Robert Preston	3/23/16
APPROVER	Doug Hunter	3/23/16
REVIEWER	[illegible]	3/23/16
APPROVER	[illegible]	3/24/16

CONTENT APPLICABLE TO ALARA? [X] YES [ ] NO
ADR NO. 24590-WTP-ADR-M-16-0001 REV: 1

BECHTEL

RIVER PROTECTION PROJECT
WASTE TREATMENT PLANT
2435 STEVENS CENTER PLACE
RICHLAND, WA 99354

CONTRACT No: DE-AC27-01RV14136

P&ID - BOF / EMF
DIRECT FEED LAW EMF PROCESS SYSTEM MISCELLANEOUS SUMPS DEP-SUMP-00008

SCALE: NONE

24590-BOF-M6-DEP-00009003

REV 0

FORM E_SDN.DGN 02/2009

"E" SIZE - 44x34
COMPUTER GENERATED - MANUAL DESIGN CHANGES NOT PERMITTED

R11777706

3/22/2016 11:02:53 AM

PLOTTED BY: jpeloh

c:\work\projects\dms\25914\BOF\M6\DEP\00009003.dgn

DEP-SUMP-00003A
EAST PROCESS AREA SUMP
=
=
SUMP CAP 58 GAL
24 IN DIA x 30 IN DEEP

DEP-PMP-00033A
EAST PROCESS AREA SUMP PUMP
=
120 GPM @ 83 FT TDH
15 HP

DEP-SUMP-00003B
EAST PROCESS AREA SUMP
=
=
SUMP CAP 58 GAL
24 IN DIA x 30 IN DEEP

DEP-PMP-00033B
EAST PROCESS AREA SUMP PUMP
=
120 GPM @ 83 FT TDH
15 HP

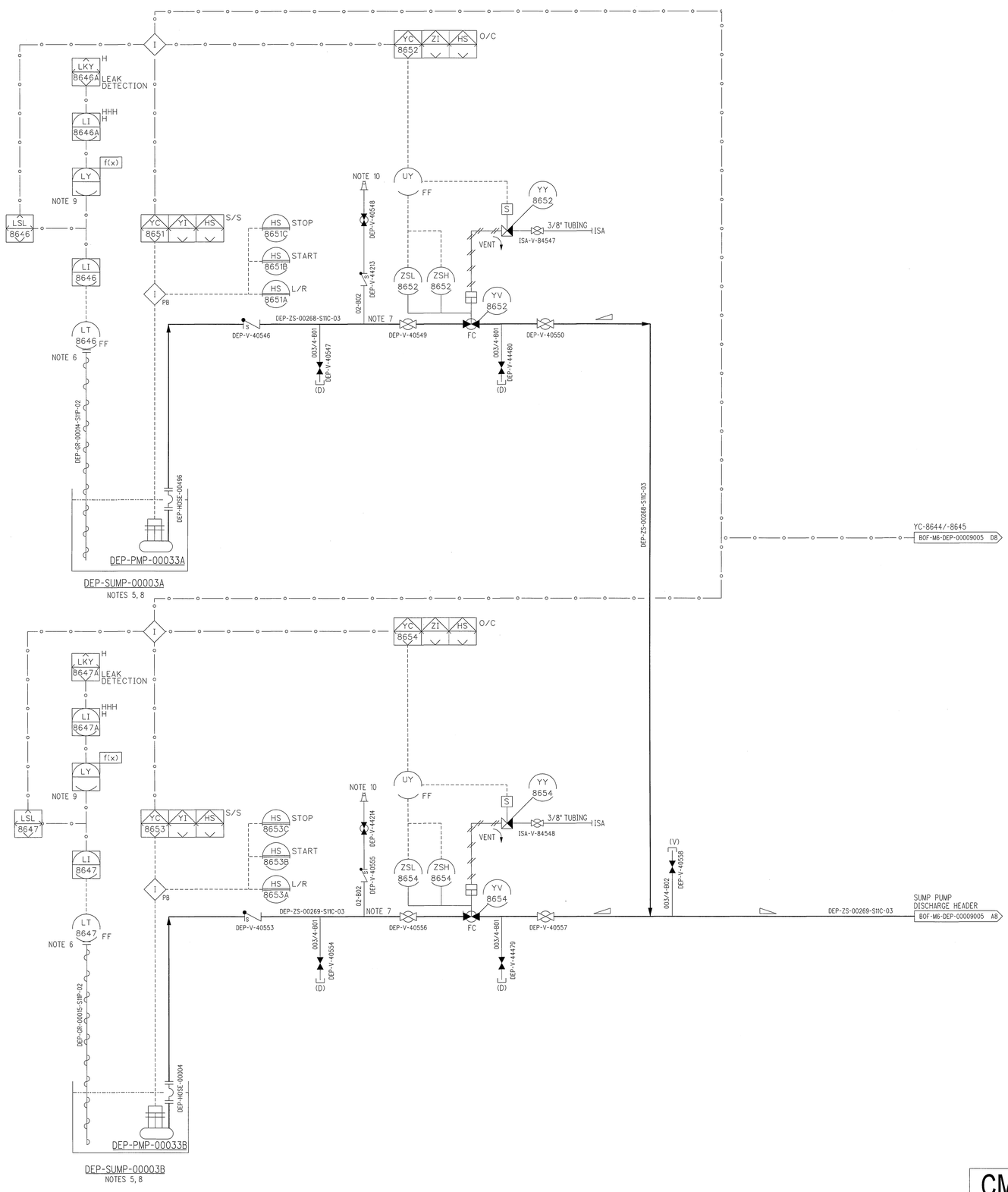

NOTES:

1. SEE DRAWINGS 24590-WTP-M6-50-00001 THROUGH 24590-WTP-M6-50-00008 FOR GENERAL NOTES, SYMBOLS AND LEGEND, AND GENERAL SLOPE REQUIREMENTS.
2. CONTENTS OF THIS DOCUMENT ARE DANGEROUS WASTE PERMIT AFFECTING.
3. THE PRESSURE BOUNDARY FOR ALL COMPONENTS ON THIS DRAWING IS QUALITY LEVEL CM AND SEISMIC CATEGORY SC-IV, UNLESS OTHERWISE NOTED.
4. ALL LINES SHOWN ON THIS DRAWING SHALL BE FREE DRAINING, UNLESS OTHERWISE NOTED.
5. SUMP SHALL BE FLAT BOTTOM SUMP.
6. STANDPIPE TO BE INSTALLED FROM 1/2" OFF OF THE BOTTOM OF THE SUMP TO 5 FEET ABOVE THE SUMP.
7. LOCATE FLUSH CONNECTION ON THE TOP OF THE PROCESS PIPE, AS CLOSE AS POSSIBLE TO THE CHECK VALVE.
8. LOCATE IN EAST SIDE OF PROCESS AREA (E-0102).
9. FUNCTION CONVERTS SUMP LEVEL IN INCHES TO GALLONS.
10. FOR CONNECTION TO LOCAL DIW UTILITY STATION FOR FLUSHING.

HOLD/OPEN ITEMS:

NONE

REFERENCES:

1. 24590-WTP-~~BOF~~-3ZD-25-00001, WTP DIRECT FEED LOW ACTIVITY WASTE (DFLAW) AND SYSTEM DESIGN DESCRIPTIONS.

PLEASE NOTE THAT SOURCE, SPECIAL NUCLEAR AND BYPRODUCT MATERIALS, AS DEFINED IN THE ATOMIC ENERGY ACT OF 1954 (AEA) ARE REGULATED AT THE U.S. DEPARTMENT OF ENERGY (DOE) FACILITIES EXCLUSIVELY BY DOE ACTING PURSUANT TO ITS AEA AUTHORITY. DOE ASSERTS THAT PURSUANT TO THE AEA IT HAS SOLE AND EXCLUSIVE RESPONSIBILITY AND AUTHORITY TO REGULATE SOURCE, SPECIAL NUCLEAR AND BYPRODUCT MATERIALS AT DOE-OWNED NUCLEAR FACILITIES. INFORMATION CONTAINED HEREIN ON RADIONUCLIDES IS PROVIDED FOR PROCESS DESCRIPTION PURPOSES ONLY.

CM — QUALITY DESIGNATOR

REVISION HISTORY

REV	DESCRIPTION	ORG	CHKD	RVWD	APVD	DATE
0	ISSUED FOR CONSTRUCTION	SJD	RP	BMV	[illegible]	3/24/16

ISSUED BY RPP-WTP PDC

ISSUE STAMP

PROJECT No.	24590	
SITE	HANFORD	
AREA	200E	
BUILDING No.	25	

BECHTEL

RIVER PROTECTION PROJECT
WASTE TREATMENT PLANT
2435 STEVENS CENTER PLACE
RICHLAND, WA 99354

CONTRACT No: DE-AC27-01RV14136

	BY	DATE
ORIGINATOR	[illegible]	3/23/16
CHECKER	[illegible]	3/23/16
APPROVER	[illegible]	3/23/16
REVIEWER	[illegible]	3/23/16
APPROVER	[illegible]	3/24/16

CONTENT APPLICABLE TO ALARA? [X] YES [ ] NO
ADR NO. 24590-WTP-ADR-M-16-0001 REV: 1

P&ID - BOF / EMF
DIRECT FEED LAW EMF PROCESS SYSTEM PROCESS AREA SUMPS DEP-SUMP-00003A/B

SCALE: NONE

24590-BOF-M6-DEP-00009004

REV 0

"E" SIZE - 44x34
COMPUTER GENERATED - MANUAL DESIGN CHANGES NOT PERMITTED

R11777707

3/23/2016 7:09:23 AM

PLOTTED BY: jfceceni

c:\work\jfceceni\dms25914\BOFM6DEP00009004.dgn

FORM E_SDN.DGN 02/2009

DEP-SUMP-00005A
PROCESS CONDENSATE VESSEL AREA SUMP
–
SUMP CAP 58 GAL
24 IN DIA x 30 IN DEEP

DEP-PMP-00035A
PROCESS CONDENSATE VESSEL AREA SUMP PUMP
–
120 GPM @ 69 FT TDH
10 HP

DEP-SUMP-00005B
PROCESS CONDENSATE VESSEL AREA SUMP
–
SUMP CAP 58 GAL
24 IN DIA x 30 IN DEEP

DEP-PMP-00035B
PROCESS CONDENSATE VESSEL AREA SUMP PUMP
–
120 GPM @ 69 FT TDH
10 HP

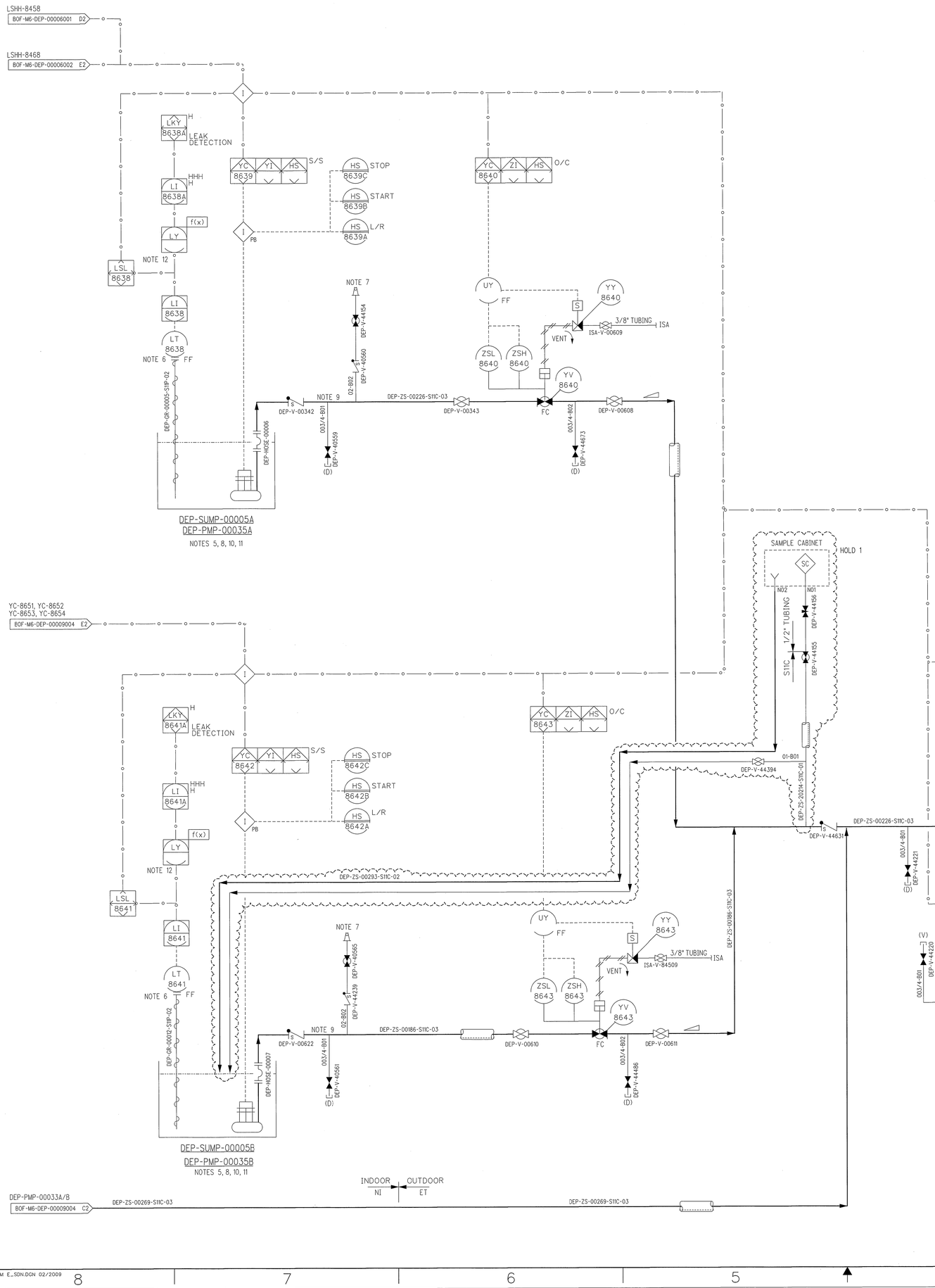

NOTES:

1. SEE DRAWINGS 24590-WTP-M6-50-00001 THROUGH 24590-WTP-M6-50-00008 FOR GENERAL NOTES, SYMBOLS AND LEGEND, AND GENERAL SLOPE REQUIREMENTS.
2. CONTENTS OF THIS DOCUMENT ARE DANGEROUS WASTE PERMIT AFFECTING.
3. THE PRESSURE BOUNDARY FOR ALL COMPONENTS ON THIS DRAWING IS QUALITY LEVEL CM AND SEISMIC CATEGORY SC-IV, UNLESS OTHERWISE NOTED.
4. ALL LINES SHALL BE FREE DRAINING, UNLESS OTHERWISE NOTED.
5. IN THE EVENT OF A LEAK OF EITHER DEP-VSL-00004A/B OR DEP-VSL-00005A/B, DEP-PMP-00035A/B DISCHARGE SHALL BE DIVERTED TO A VESSEL THAT IS NOT LEAKING.
6. STANDPIPE TO BE INSTALLED FROM 1/2" OFF OF THE BOTTOM OF THE SUMP TO 7.5 FEET ABOVE THE SUMP.
7. FOR CONNECTION TO LOCAL DIW UTILITY STATION FOR FLUSHING.
8. LOCATE IN PROCESS CONDENSATE VESSEL AREA (E-0106).
9. LOCATE FLUSH CONNECTION ON THE TOP OF THE PROCESS PIPE AS CLOSE AS POSSIBLE TO CHECK VALVE.
10. SUMP CONTENTS ARE SAMPLED PRIOR TO TRANSFER.
11. SUMP SHALL BE FLAT BOTTOM SUMP.
12. FUNCTION CONVERTS SUMP LEVEL IN INCHES TO GALLONS.

HOLD/OPEN ITEMS:

1. SUMP SAMPLING DESIGN ON HOLD PENDING IDENTIFICATION OF A METHOD OF OBTAINING A SAMPLE WITHOUT REQUIRING THE SUMP PUMP OPERATING. SUMP PUMP MAY REQUIRE MORE LIQUID THEN AVAILABLE WHEN SAMPLE IS REQUIRED. SAMPLE DESIGN SHOULD NOT ALLOW TRANSFER BETWEEN SUMPS.

REFERENCES:

1. 24590-BOF-3ZD-25-00001, WTP DIRECT FEED LOW ACTIVITY WASTE (DFLAW) FACILITY AND SYSTEM DESIGN DESCRIPTIONS.

PLEASE NOTE THAT SOURCE, SPECIAL NUCLEAR AND BYPRODUCT MATERIALS, AS DEFINED IN THE ATOMIC ENERGY ACT OF 1954 (AEA) ARE REGULATED AT THE U.S. DEPARTMENT OF ENERGY (DOE) FACILITIES EXCLUSIVELY BY DOE ACTING PURSUANT TO ITS AEA AUTHORITY DOE ASSERTS, THAT PURSUANT TO THE AEA IT HAS SOLE AND EXCLUSIVE RESPONSIBILITY AND AUTHORITY TO REGULATE SOURCE, SPECIAL NUCLEAR AND BYPRODUCT MATERIALS AT DOE-OWNED NUCLEAR FACILITIES. INFORMATION CONTAINED HEREIN ON RADIONUCLIDES IS PROVIDED FOR PROCESS DESCRIPTION PURPOSES ONLY.

CM
QUALITY DESIGNATOR

REVISION HISTORY

REV	DESCRIPTION	ORG	CHKD	RVWD	APVD	DATE
0	ISSUED FOR CONSTRUCTION	SJD	RD	BAV	[illegible]	3/24/16

ISSUED BY RPP-WTP PDC

ISSUE STAMP

PROJECT No.	24590	
SITE	HANFORD	
AREA	200E	
BUILDING No.	25	

	BY	DATE
ORIGINATOR	Steven Reichen	3/22/16
CHECKER	Robert Proctor	3/22/16
APPROVER	Dag Nielsen	3/22/16
REVIEWER	[illegible]	3/22/16
APPROVER	[illegible]	3/24/16

CONTENT APPLICABLE TO ALARA? [X] YES [ ] NO
ADR NO. 24590-WTP-ADR-M-16-0001 REV: 1

BECHTEL

RIVER PROTECTION PROJECT
WASTE TREATMENT PLANT
2435 STEVENS CENTER PLACE
RICHLAND, WA 99354

CONTRACT No: DE-AC27-01RV14136

P&ID - BOF / EMF DIRECT FEED LAW EMF PROCESS SYSTEM PROCESS VESSEL AREA SUMPS DEP SUMP-00005A / B

SCALE: NONE

24590-BOF-M6-DEP-00009005 REV 0

R11777708

3/22/2016 11:05:20 AM

PLOTTED BY: jreichl c:\work\jreichl\dms2594\BOFM6DEP00009005.dgn

FORM E_SDN.DGN 02/2009

"E" SIZE - 44x34
COMPUTER GENERATED - MANUAL DESIGN CHANGES NOT PERMITTED

DEP-LDB-00001 EFFLUENT TRANSFER LEAK DETECTION BOX — 0,08 GAL DET. LIMIT 8 IN D x 34 IN L

DEP-LDB-00006 LAB TRANSFER LEAK DETECTION BOX — 0,08 GAL DET. LIMIT 8 IN D x 34 IN L

DEP-LDB-00002 LAWPS TRANSFER LEAK DETECTION BOX — 0,08 GAL DET. LIMIT 8 IN D x 34 IN L

DEP-LDB-00005 SCRUBBER BLOWDOWN LEAK DETECTION BOX — 0,08 GAL DET. LIMIT 8 IN D x 34 IN L

DEP-LDB-00003 LAWPS TRANSFER LEAK DETECTION BOX — 0,08 GAL DET. LIMIT 8 IN D x 34 IN L

DEP-LDB-00004 SBS/PLANT WASH TRANSFER LEAK DETECTION BOX — 0,08 GAL DET. LIMIT 8 IN D x 34 IN L

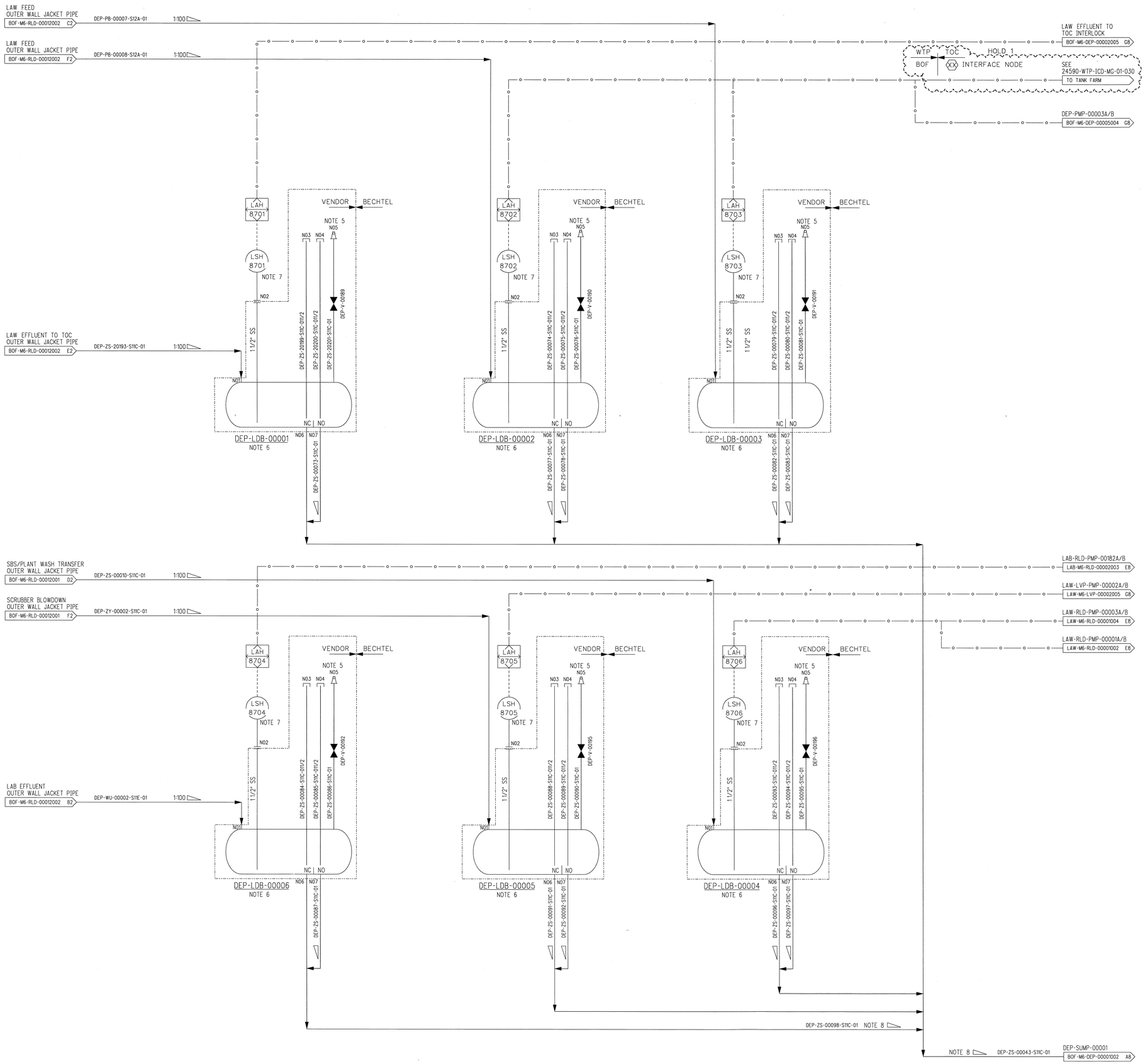

NOTES:

1. SEE DRAWINGS 24590-WTP-M6-50-00001 THROUGH 24590-WTP-M6-50-00008 FOR GENERAL NOTES, SYMBOLS AND LEGEND, AND GENERAL SLOPE REQUIREMENTS.
2. CONTENTS OF THIS DOCUMENT ARE DANGEROUS WASTE PERMIT AFFECTING.
3. THE PRESSURE BOUNDARY FOR ALL COMPONENTS SHOWN ON THIS DRAWING IS QUALITY LEVEL CM AND SEISMIC CATEGORY SC-IV, UNLESS OTHERWISE NOTED.
4. ALL LINES SHOWN ON THIS DRAWING SHALL BE SELF DRAINING, UNLESS OTHERWISE NOTED.
5. QUICK CONNECTION IS PROVIDED FOR PNEUMATIC TESTING OF THE LEAK DETECTION BOX AND THE PIPE JACKET.
6. OVERFLOW AND DRAIN PLUGS OPERATED REMOTELY VIA RODS THAT EXTEND UP TO ELEVATION (-22'-6") THROUGH PIPE SLEEVES. DRAIN PLUG INSTALLED IN THE CLOSED POSITION TO CREATE A DETECTABLE LEVEL. UPON LEVEL DETECTION, THE PLUG IS LIFTED TO DRAIN THE LEAK DETECTION BOX. THE OVERFLOW PLUG IS NORMALLY OPEN FOR OVERFLOW PROTECTION. BOTH PLUGS WILL BE CLOSED FOR PNEUMATIC TESTING.
7. LEVEL SENSOR TO BE MOUNTED DIRECTLY TO THE VENDOR FLANGE.
8. SLOPE COLLECTION HEADER AT 1:100 AS PRACTICAL WITH A MINIMUM SLOPE OF 1:200.

HOLD/OPEN ITEMS:

1. INTERFACE NODE LOCATION AND CONFIGURATION ON HOLD UNTIL SPECIFIED IN 24590-WTP-ICD-MG-01-030.

REFERENCES:

1. 24590-BOF-3ZD-25-00001, WTP DIRECT FEED LOW ACTIVITY WASTE (DFLAW) FACILITY AND SYSTEM DESIGN DESCRIPTIONS.

PLEASE NOTE THAT SOURCE, SPECIAL NUCLEAR AND BYPRODUCT MATERIALS, AS DEFINED IN THE ATOMIC ENERGY ACT OF 1954 (AEA) ARE REGULATED AT THE U.S. DEPARTMENT OF ENERGY (DOE) FACILITIES EXCLUSIVELY BY DOE ACTING PURSUANT TO ITS AEA AUTHORITY. DOE ASSERTS, THAT PURSUANT TO THE AEA IT HAS SOLE AND EXCLUSIVE RESPONSIBILITY AND AUTHORITY TO REGULATE SOURCE, SPECIAL NUCLEAR AND BYPRODUCT MATERIALS AT DOE-OWNED NUCLEAR FACILITIES. INFORMATION CONTAINED HEREIN ON RADIONUCLIDES IS PROVIDED FOR PROCESS DESCRIPTION PURPOSES ONLY.

DRAWING INDEX

DWG NO	TITLE
24590-BOF-M6-DEP-00011001	DEP SYS EFFLUENT FAC LEAK DETECTION DEP-LDB-00001 THRU -00006

CM — QUALITY DESIGNATOR

REVISION HISTORY

REV	DESCRIPTION	ORG	CHKD	RVWD	APVD	DATE
0	ISSUED FOR CONSTRUCTION	JR	MRG	RE	[illegible]	4/12/16

ISSUED BY RPP-WTP PDC ISSUE STAMP

PROJECT No.	24590
SITE	HANFORD
AREA	200E
BUILDING No.	25

	BY	DATE
ORIGINATOR	[illegible]	4/7/16
CHECKER	[illegible]	4/7/16
APPROVER	[illegible]	4/13/16
REVIEWER	[illegible]	4/7/16
APPROVER	[illegible]	4-7-16
APPROVER	[illegible]	4/7/16

CONTENT APPLICABLE TO ALARA? [X] YES [ ] NO
ADR NO. 24590-WTP-ADR-M-16-0001 REV: 1

RIVER PROTECTION PROJECT
WASTE TREATMENT PLANT
2435 STEVENS CENTER PLACE
RICHLAND, WA 99354

CONTRACT No: DE-AC27-01RV14136

P&ID - BOF/EMF DIRECT FEED LAW EMF PROCESS SYSTEM EFFLUENT FACILITY LEAK DETECTION DEP-LDB-00001 THRU DEP-LDB-00006

SCALE: NONE

24590-BOF-M6-DEP-00011001 REV 0

"E" SIZE - 44x34
COMPUTER GENERATED - MANUAL DESIGN CHANGES NOT PERMITTED

FORM E_SDN.DGN 02/2009

R1176289

4/7/2016 9:46:17 AM

PLOTTED BY: tsosovic c:\work\tsosovic\dms\25914\BOF\M6\DEP\00011001.dgn

Drawing Change Notice

CHANGE DOCUMENT NO.
24590-BOF-M6N-DEP-00001

JOB NO.	TITLE FOR CHANGE NOTICE
24590	MISCELLANEOUS CHANGES TO LOW POINT DRAIN VESSEL P&ID

DOCUMENT NUMBER	REV	DOCUMENT NUMBER	REV
24590-BOF-M6-DEP-00001002	0		

PART OF DESIGN CHANGE PACKAGE (DCP)? ☐ Yes ☒ No

The system has neither been turned over nor is within the 8 week walkdown.

JUSTIFICATION FOR CHANGE

Add software switch DEP-HS-8105D to allow effective control of duty/standby pumps. Change level indications and associated data signals due to changes in control strategy. Revise offsheet connector zone information to rectify discrepancies. In addition, add fail close indication to valve DEP-YV-8106 as the valve fail condition is required information on P&IDs.

MARGIN ANALYSIS

Is the drawing a line list or equipment datasheet AND is the change associated with a Q SCC? ☐ Yes ☒ No

Supersedes Change Document	☐ Yes	☒ No				
ECN Needed	☐ Yes	☒ No				
REQUIREMENTS REVIEW						
Client Approval Required	☐ Yes	☒ No	Interface Resolution Required *	☐ Yes	☒ No	
Address any "yes" answers in the description						

DESCRIPTION OF CHANGE

1) Add software switch DEP-HS-8105D to start/stop pumps in zone G6 of 24590-BOF-M6-DEP-00001002

Before:

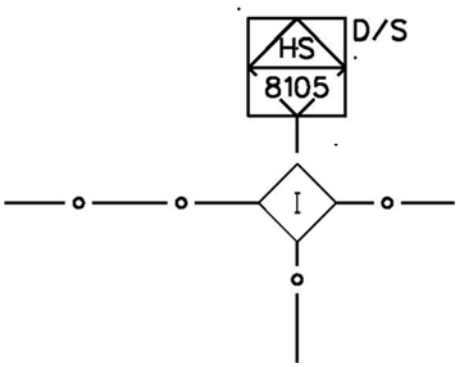

After:

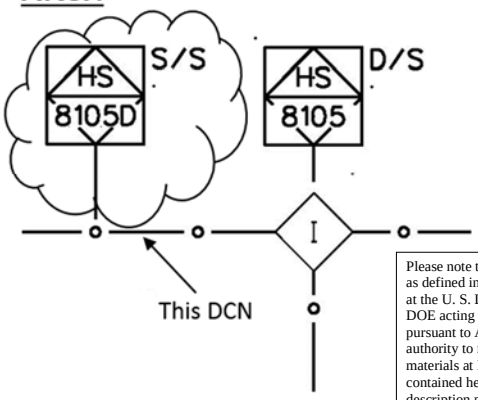

Please note that source, special nuclear, and byproduct materials, as defined in the Atomic Energy Act of 1954 (AEA) are regulated at the U. S. Department of Energy (DOE) facilities exclusively by DOE acting pursuant to its AEA authority. DOE asserts that pursuant to AEA, it has sole and exclusive responsibility and authority to regulate source, special nuclear, and byproduct materials at DOE-owned nuclear facilities. Information contained herein on radionuclides is provided for process description purposes only.

2) Add fail close label to valve DEP-YV-8106 found in zone G4 of 24590-BOF-M6-DEP-00001002

Before:

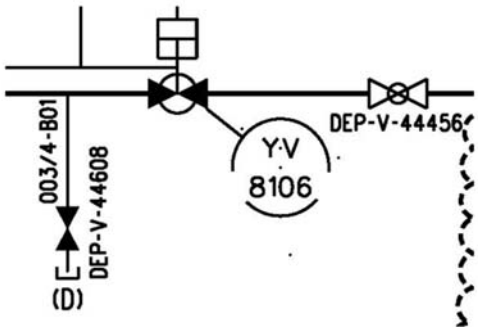

After:

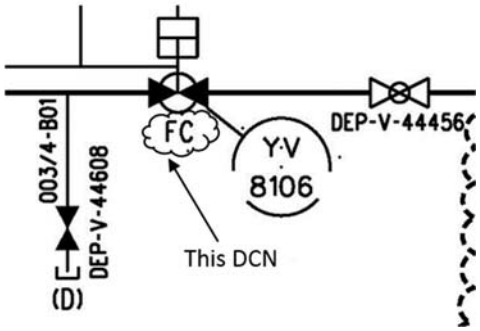

JOB NO.	TITLE FOR CHANGE NOTICE
24590	MISCELLANEOUS CHANGES TO LOW POINT DRAIN VESSEL P&ID

DESCRIPTION OF CHANGE

3) Switch tag numbers of level indicators and change source of data signals found in zone E3/E4/F3/F4 of 24590-BOF-M6-DEP-00001002

Before:

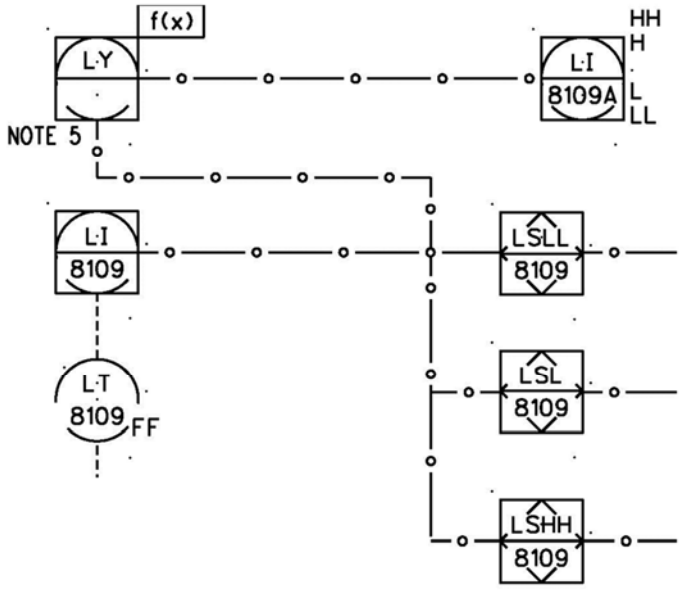

After:

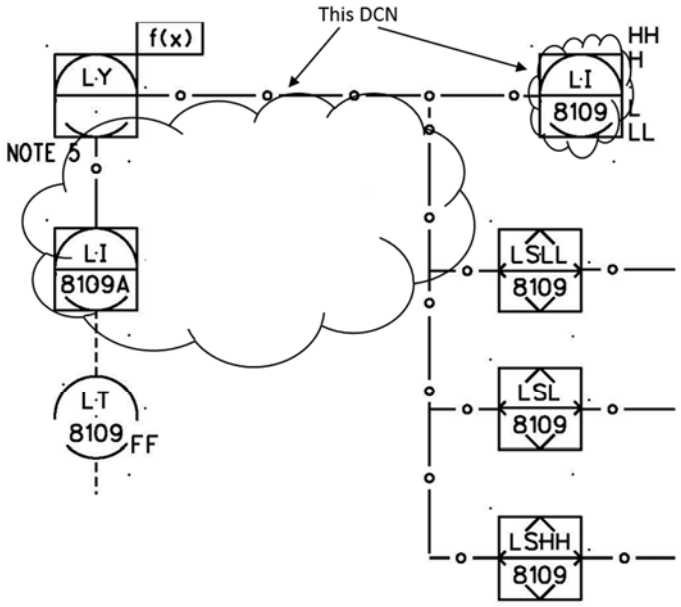

4) Revise zone information within offsheet connector for data signal found in zone E2 of 24590-BOF-M6-DEP-00001002

Before:

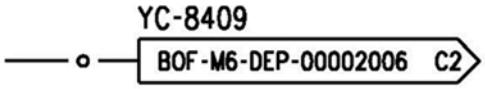

After:

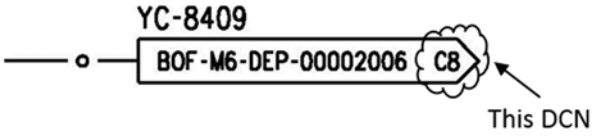

5) Add high-high alarm to level indication DEP-LI-8112 found in zone C3 of 24590-BOF-M6-DEP-00001002

Before:

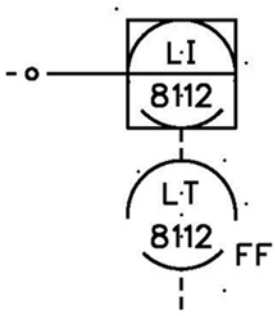

After:

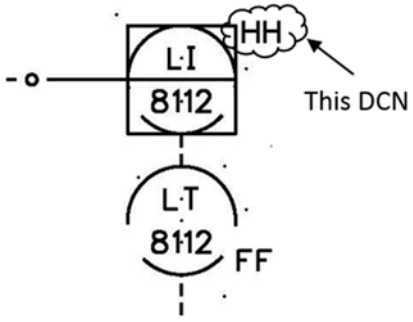

Drawing Change Notice

CHANGE DOCUMENT NO.
24590-BOF-M6N-DEP-00001

JOB NO.	TITLE FOR CHANGE NOTICE
24590	MISCELLANEOUS CHANGES TO LOW POINT DRAIN VESSEL P&ID

ORIGINATOR	CHECKER
Catherine Shipman – C&I	Pat Treese - C&I

Approval(s)

MS EGS - Youssef Mohammad-Zadeh	C&I EGS - Dennis Huth	DFLAW PE - George Fry	

Date *(inserted by final approver)*: 8/19/16

Drawing Change Notice

CHANGE DOCUMENT NO.
24590-BOF-M6N-DEP-00007

JOB NO.	TITLE FOR CHANGE NOTICE
24590	MISCELLANEOUS TITLE CHANGES AND REMOVAL OF AUTO/MANUAL ON DEP-YC-8650

DOCUMENT NUMBER	REV	DOCUMENT NUMBER	REV
24590-BOF-M6-DEP-00004001	0	24590-BOF-M6-DEP-00009001	0
24590-BOF-M6-DEP-00004002	0	24590-BOF-M6-DEP-00009003	0
24590-BOF-M6-DEP-00006001	0	24590-BOF-M6-DEP-00009005	0
24590-BOF-M6-DEP-00006002	0		

PART OF DESIGN CHANGE PACKAGE (DCP)? ☐ Yes ☒ No

The system has neither been turned over nor is within the 8 week walkdown.

JUSTIFICATION FOR CHANGE

Revise titles of offsheet connectors for datalinks to rectify discrepances. Remove auto/manual feature of DEP-YC-8650 to lock valve in manual mode.

MARGIN ANALYSIS

Is the drawing a line list or equipment datasheet AND is the change associated with a Q SCC? ☐ Yes ☒ No

Supersedes Change Document	☐ Yes	☒ No			
ECN Needed	☐ Yes	☒ No			
REQUIREMENTS REVIEW					
Client Approval Required	☐ Yes	☒ No	Interface Resolution Required *	☐ Yes	☒ No

Address any "yes" answers in the description

DESCRIPTION OF CHANGE

1) Remove excess valve and pump references in title of offsheet connector found in zone F2/G2 of 24590-BOF-M6-DEP-00004001

Before:

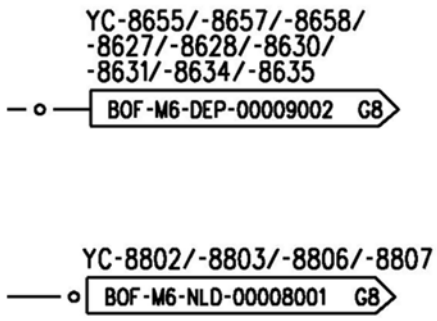

After:

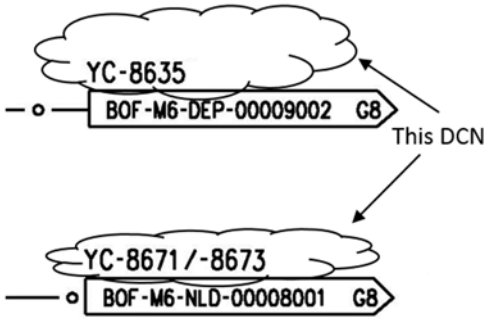

2) Remove excess valve and pump references in title of offsheet connector found in zone F2 of 24590-BOF-M6-DEP-00004002

Before:

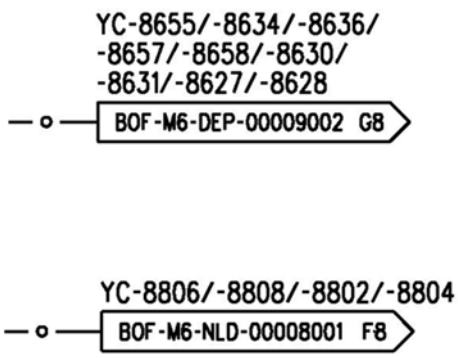

After:

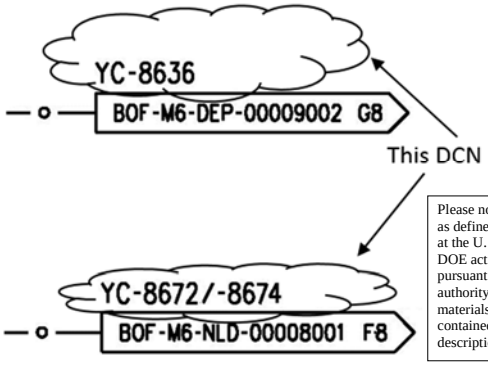

Please note that source, special nuclear, and byproduct materials, as defined in the Atomic Energy Act of 1954 (AEA) are regulated at the U. S. Department of Energy (DOE) facilities exclusively by DOE acting pursuant to its AEA authority. DOE asserts that pursuant to AEA, it has sole and exclusive responsibility and authority to regulate source, special nuclear, and byproduct materials at DOE-owned nuclear facilities. Information contained herein on radionuclides is provided for process description purposes only.

JOB NO.	TITLE FOR CHANGE NOTICE
24590	MISCELLANEOUS TITLE CHANGES AND REMOVAL OF AUTO/MANUAL ON DEP-YC-8650

DESCRIPTION OF CHANGE

3) Remove excess valve and pump references in title of offsheet connector found in zone D2 of 24590-BOF-M6-DEP-00006001

Before:

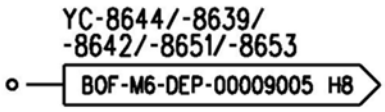

After:

4) Remove excess valve and pump references in title of offsheet connector found in zone E2 of 24590-BOF-M6-DEP-00006002

Before:

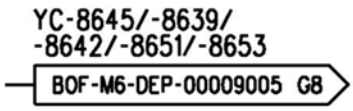

After:

5) Remove vessel references in title of offsheet connector found in zone H2 of 24590-BOF-M6-DEP-00009001

Before:

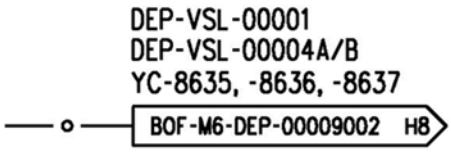

After:

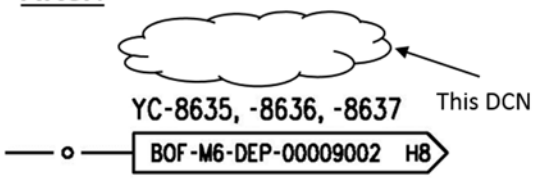

6) Remove A/M from DEP-YC-8650 in zone E3 of 24590-BOF-M6-DEP-00009003

Before:

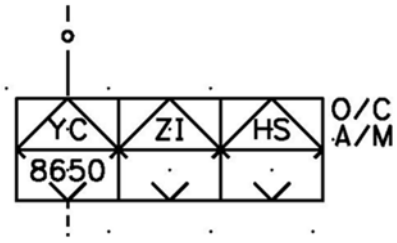

After:

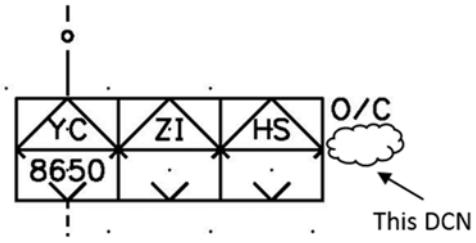

7) Remove excess valve references in title of offsheet connector found in zone D8 of 24590-BOF-M6-DEP-00009005

Before:

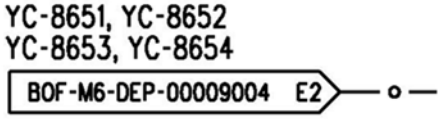

After:

Drawing Change Notice

CHANGE DOCUMENT NO.
24590-BOF-M6N-DEP-00007

JOB NO.	TITLE FOR CHANGE NOTICE
24590	MISCELLANEOUS TITLE CHANGES AND REMOVAL OF AUTO/MANUAL ON DEP-YC-8650

ORIGINATOR	CHECKER
Catherine Shipman – C&I	Pat Treese - C&I

Approval(s)

MS EGS - Youssef Mohammad-Zadeh	C&I EGS - Dennis Huth	DFLAW PE - George Fry	

Date *(inserted by final approver)*: 6/15/16

Drawing Change Notice

CHANGE DOCUMENT NO.
24590-BOF-M6N-J21T-00002

JOB NO.	TITLE FOR CHANGE NOTICE
24590	ADDITION, REMOVAL, AND REVISION OF OFFSHEET CONNECTORS FOR LEAK DETECTION

DOCUMENT NUMBER	REV	DOCUMENT NUMBER	REV
24590-BOF-M6-DEP-00002002	0	24590-BOF-M6-DEP-00010001	0
24590-BOF-M6-DEP-00002005	0	24590-BOF-M6-DEP-00011001	0
24590-BOF-M6-DEP-00002006	0	24590-BOF-M6-SHR-00003001	0
24590-BOF-M6-DEP-00005004	0	24590-BOF-M6-SNR-00002001	0
24590-BOF-M6-DEP-00006004	0		

PART OF DESIGN CHANGE PACKAGE (DCP)? ☐ Yes ☒ No

The systems have neither been turned over nor are within the 8 week walkdown.

JUSTIFICATION FOR CHANGE

Add, remove, and revise offsheet connectors for datalinks to stop pumps and close valves upon leak detection, due to permitting requirements. In addition, this incorporates 24590-BOF-EIE-M-15-0123 for document 24590-BOF-M6-DEP-00005004.

MARGIN ANALYSIS

Is the drawing a line list or equipment datasheet AND is the change associated with a Q SCC? ☐ Yes ☒ No

Supersedes Change Document	☐ Yes	☒ No			
ECN Needed	☐ Yes	☒ No			
REQUIREMENTS REVIEW					
Client Approval Required	☐ Yes	☒ No	Interface Resolution Required *	☐ Yes	☒ No

Address any "yes" answers in the description

DESCRIPTION OF CHANGE

1) Add leak detection offsheet connector for datalink in zone E8 of 24590-BOF-M6-DEP-00002002

Before:

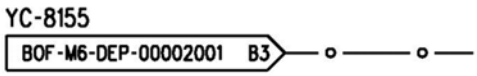

After:

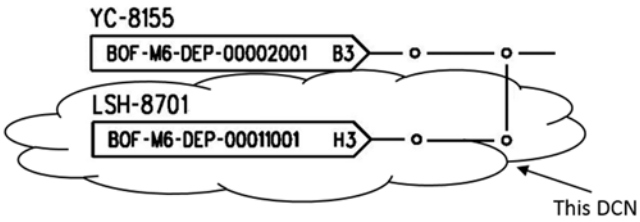

2) Remove leak detection offsheet connector for datalink in zone G8 of 24590-BOF-M6-DEP-00002005

Before:

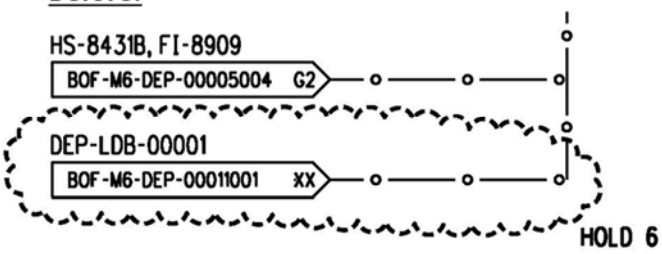

After:

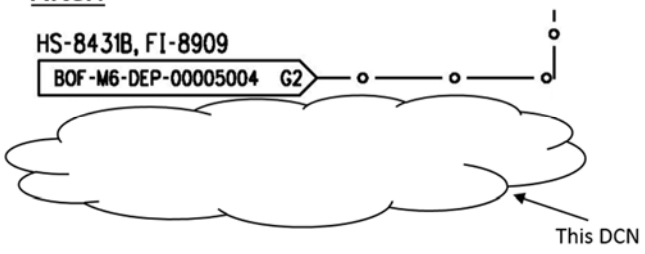

Please note that source, special nuclear, and byproduct materials, as defined in the Atomic Energy Act of 1954 (AEA) are regulated at the U. S. Department of Energy (DOE) facilities exclusively by DOE acting pursuant to its AEA authority. DOE asserts that pursuant to AEA, it has sole and exclusive responsibility and authority to regulate source, special nuclear, and byproduct materials at DOE-owned nuclear facilities. Information contained herein on radionuclides is provided for process description purposes only.

JOB NO.	TITLE FOR CHANGE NOTICE
24590	ADDITION, REMOVAL, AND REVISION OF OFFSHEET CONNECTORS FOR LEAK DETECTION

DESCRIPTION OF CHANGE

3) Remove Hold 6 in zone F1/F2 of 24590-BOF-M6-DEP-00002005

Before:

5. RESTRICTION ORIFICE ON HOLD PENDING SIZING CALCULATION.

6. CONTROL LOGIC ON HOLD PENDING ISSUANCE OF CONNECTING P&ID.

After:

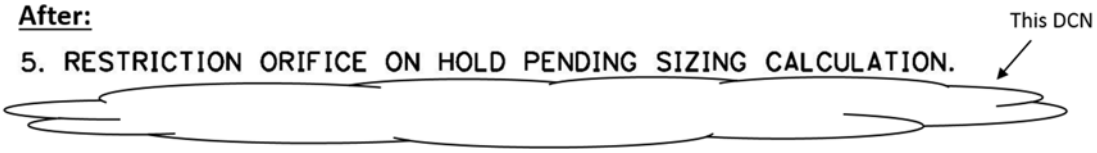

4) Add leak detection offsheet connector for datalink in zone G8 of 24590-BOF-M6-DEP-00002006

Before:

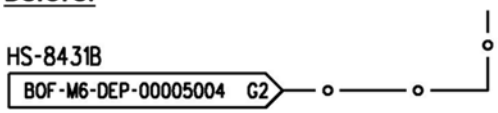

After:

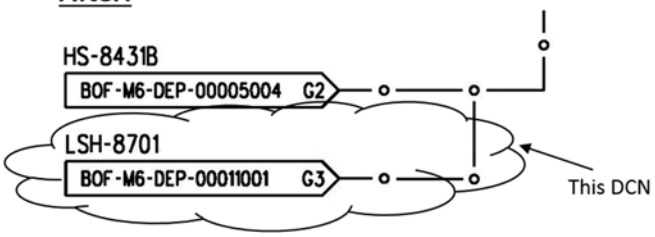

5) Add leak detection offsheet connector for datalink in zone C8 of 24590-BOF-M6-DEP-00005004

Before:

After:

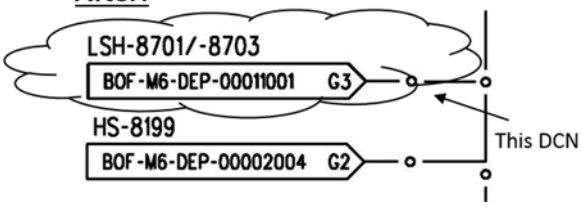

6) Add leak detection offsheet connector for datalink in zone G8 of 24590-BOF-M6-DEP-00006004

Before:

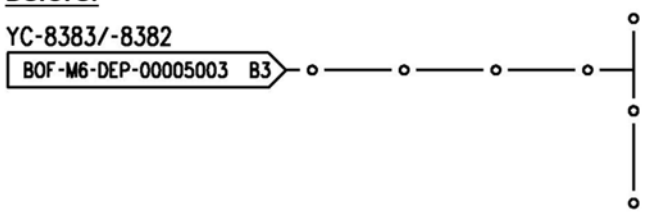

After:

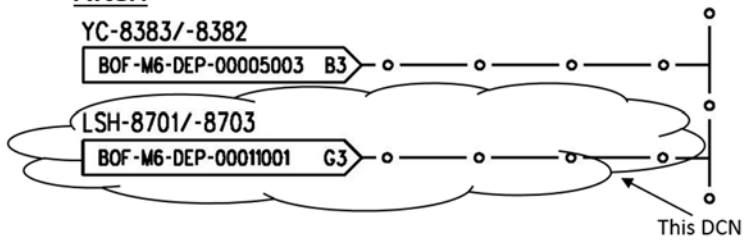

7) Revise leak detection offsheet connector for datalink in zone H8 of 24590-BOF-M6-DEP-00010001

Before:

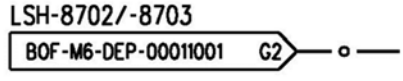

After:

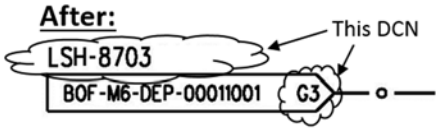

JOB NO.	TITLE FOR CHANGE NOTICE
24590	ADDITION, REMOVAL, AND REVISION OF OFFSHEET CONNECTORS FOR LEAK DETECTION

DESCRIPTION OF CHANGE

8) Revise, add, and delete leak detection offsheet connectors for datalinks in zone G3/H3 of 24590-BOF-M6-DEP-00011001

Before:

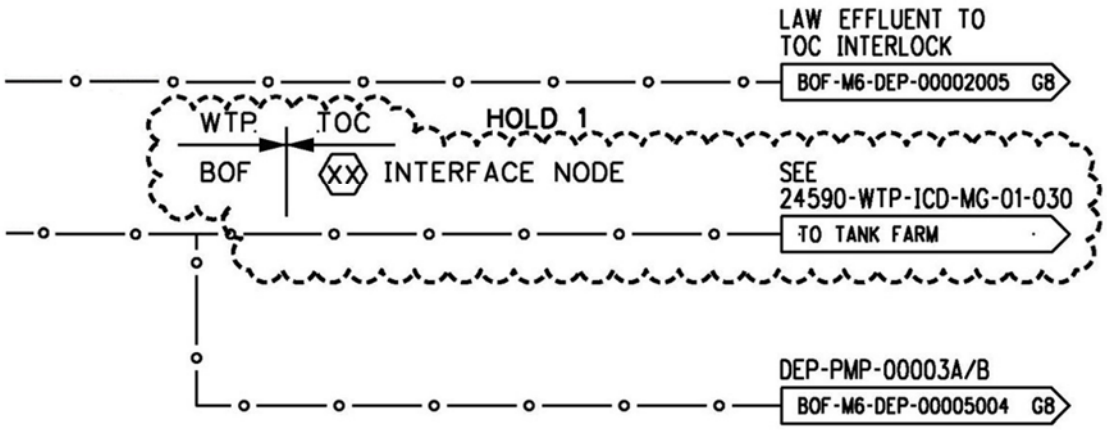

After:

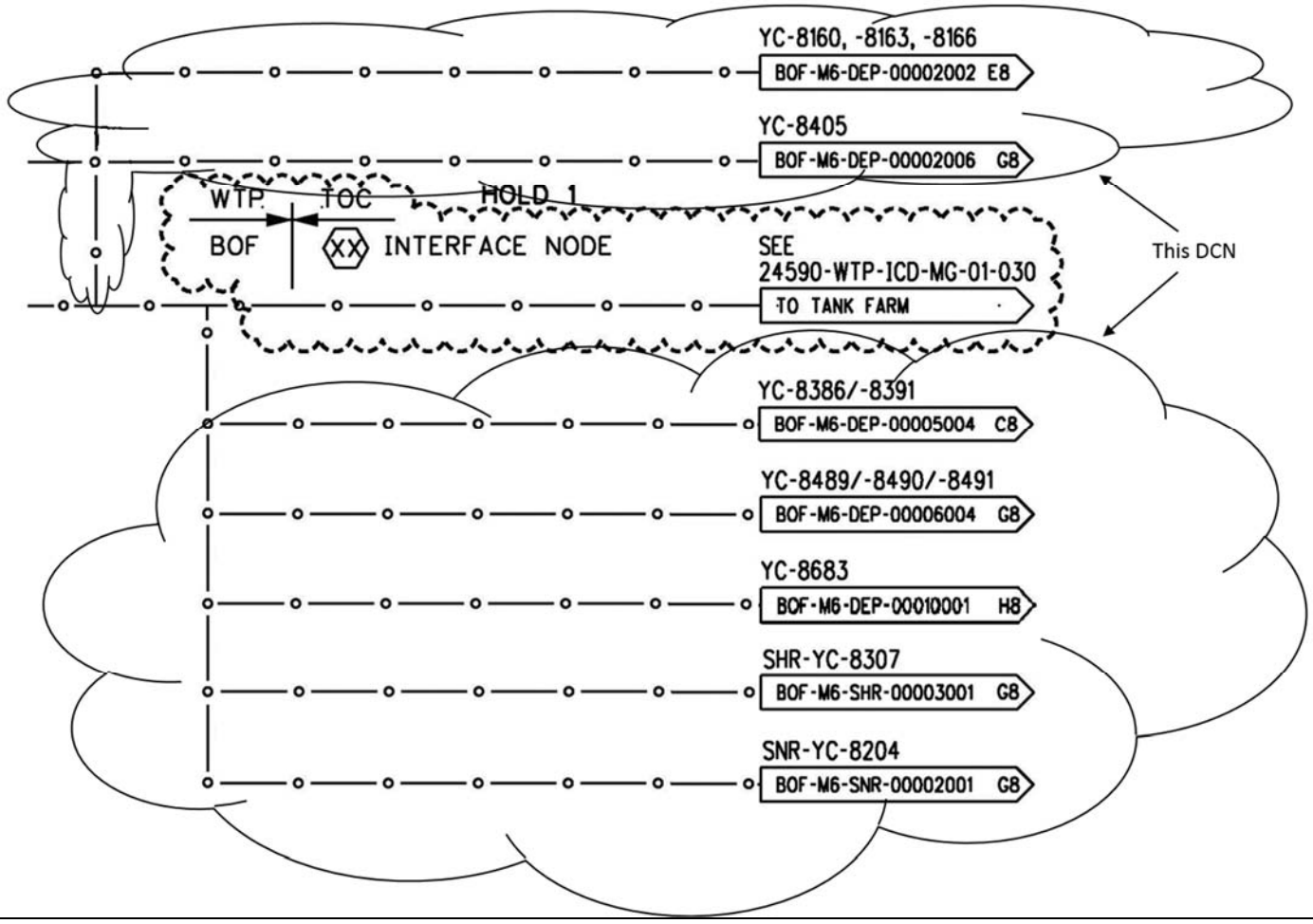

Drawing Change Notice

CHANGE DOCUMENT NO.
24590-BOF-M6N-J21T-00002

JOB NO.	TITLE FOR CHANGE NOTICE
24590	ADDITION, REMOVAL, AND REVISION OF OFFSHEET CONNECTORS FOR LEAK DETECTION

DESCRIPTION OF CHANGE

9) Add leak detection offsheet connector for datalink in zone G8 of 24590-BOF-M6-SHR-00003001

Before:

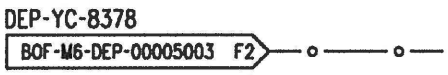

After:

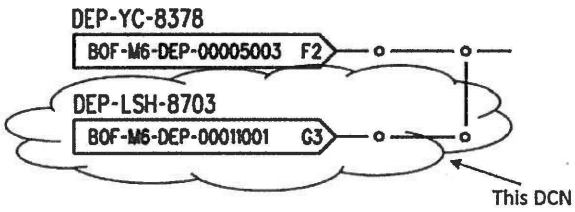

10) Add leak detection offsheet connector for datalink in zone G8 of 24590-BOF-M6-SNR-00002001

Before:

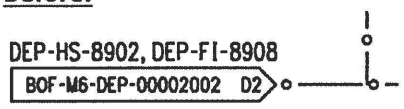

After:

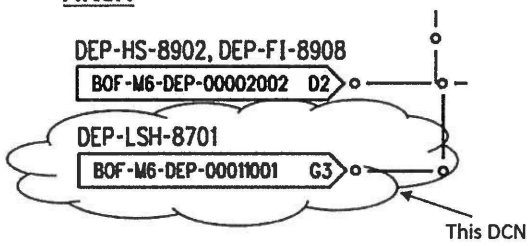

ORIGINATOR	CHECKER
Catherine Shipman – C&I	Pat Treese - C&I

Approval(s)

MS EGS - Youssef Mohammad-Zadeh	C&I EGS - Dennis Huth	DFLAW PE - George Fry	

Date *(inserted by final approver)*: 6/14/16

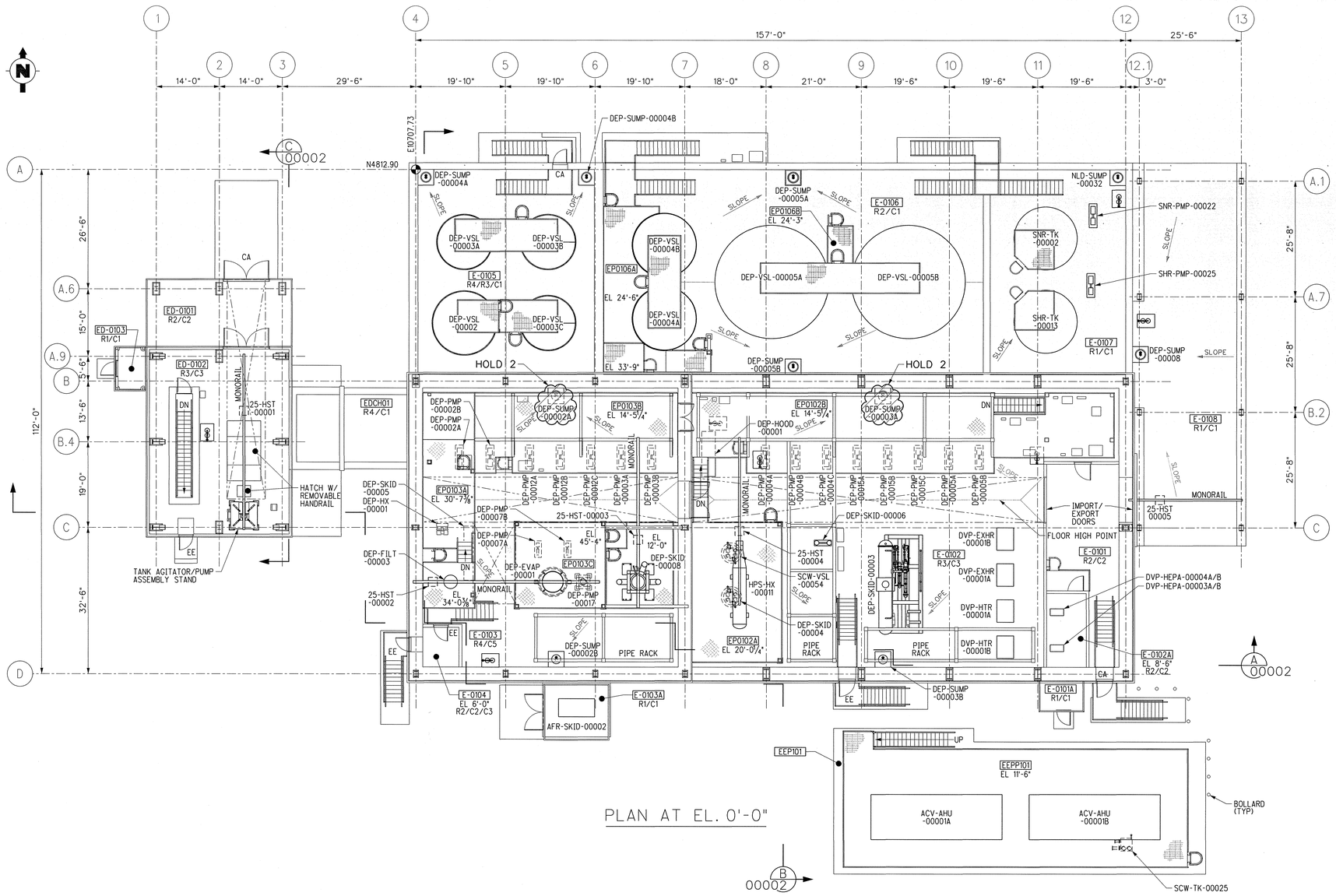

PLAN AT EL. 0'-0"

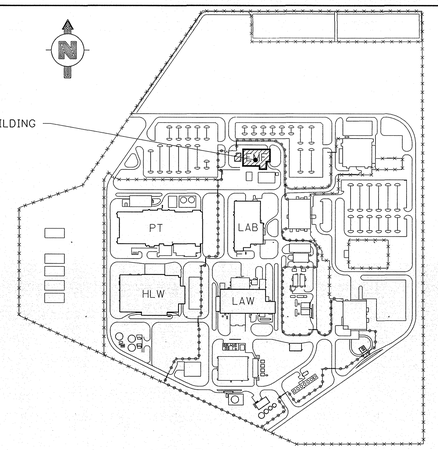

KEY PLAN

GENERAL NOTES:

HOLD 1

1. FOR REFERENCE, SEE PLOT PLAN DWG 24590-BOF-P1-50-00001.
2. REFER TO DRAWING No. 24590-BOF-C2-C12T-00002 FOR CONVERSIONS FROM LAW EFFLUENT PROCESS BLDG TO SITE ELEVATIONS.
3. THE RADIATION/CONTAMINATION CLASSIFICATIONS DEPICTED ON THE DRAWING ARE FOR DESIGN PURPOSES ONLY AND DO NOT NECESSARILY INDICATE HOW THE AREAS WILL BE POSTED (CONTROLLED) DURING RADIOACTIVE OPERATIONS.
4. IBC 2000 REQUIRES A MINIMUM OF 40'-0" SEPARATION OF BUILDINGS WITH NON-RATED WALLS. THIS APPLIES TO BUILDINGS 25, 26 AND 27.

NOTES:

1. CONTENTS OF THIS DOCUMENT ARE DANGEROUS WASTE PERMIT AFFECTING.
2. FLOOR/LINER SLOPE IS REQUIRED IN ROOMS WITH SUMPS. SLOPE IS TO BE A MINIMUM OF 1% TOWARD THE SUMP.
3. PLATFORMS, LANDINGS AND STAIRS IN E-0102, E-0102A, E-0103 AND ED-B001 WILL BE CHECKER PLATE.

HOLDS:

1. GENERAL NOTES 1 AND 2 ON HOLD PENDING REVISION OF REFERENCED DOCUMENTS TO ADD EMF RELATED CONTENT.
2. HOLD LOCATION FOR WALL INSULATION.

LEGEND:

CA	CONTROLLED ACCESS
EE	EMERGENCY EXIT
P.O.S.	POINT OF SUPPORT
T.O.C.	TOP OF CONCRETE
T.O.S.	TOP OF STEEL
	EQUIPMENT REMOVAL/LAY DOWN AREA
	EMERGENCY SHOWER/EYEWASH (PLAN VIEW)
	CONCRETE
	GRATING
	CHECKER PLATE
	SUMP
	SUMP W/SUMP PUMP
	LADDER W/CAGE
E-XXXXX	LAW EFFLUENT PROCESS BLDG ROOM
EPXXXXX	LAW EFFLUENT PROCESS BLDG PLATFORM
EEPXXXXX	LAW EFFLUENT PROCESS BLDG EQUIPMENT PAD
EEPPXXXX	LAW EFFLUENT PROCESS BLDG EQUIPMENT PAD PLATFORM
ED-XXXXX	LAW EFFLUENT DRAIN TANK BLDG ROOM
ED-BXXXX	LAW EFFLUENT DRAIN TANK BLDG ROOM (BELOW GRADE)
EDPBXXXX	LAW EFFLUENT DRAIN TANK BLDG PLATFORM (BELOW GRADE)
EDCHXXX	LAW EFFLUENT DRAIN TANK BLDG CHASE
EU-XXXXX	LAW EFFLUENT UTILITY BLDG ROOM
EUPXXXXX	LAW EFFLUENT UTILITY BLDG PLATFORM

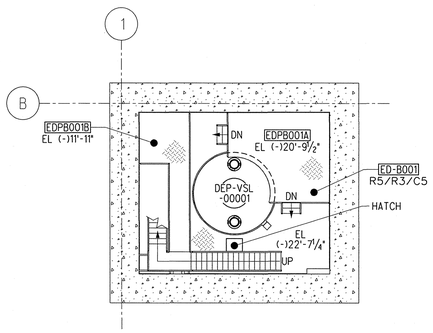

PARTIAL PLAN AT EL. (-)22'-7¼"

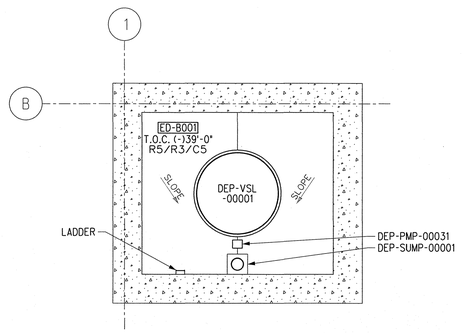

PARTIAL PLAN AT EL. (-)39'-0"

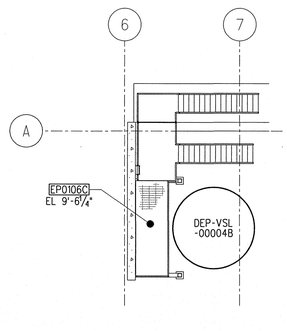

PARTIAL PLAN BELOW EP0106A

REV	DESCRIPTION	ORG	CHKD	RVWD	APVD	DATE
0	ISSUED FOR DESIGN	JTC	SRH	[illegible]	[illegible]	3/4/2016

REVISION HISTORY

Please note that source, special nuclear, and byproduct materials , as defined in the Atomic Energy Act of 1954 (AEA) are regulated at the U. S. Department of Energy (DOE) facilities exclusively by DOE acting pursuant to its AEA authority. DOE asserts that pursuant to AEA, it has sole and exclusive responsibility and authority to regulate source, special nuclear, and byproduct materials at DOE-owned nuclear facilities. Information contained herein on radionuclides is provided for process description purposes only.

ISSUED BY RPP-WTP PDC
ISSUE STAMP

	PROJECT No.	24590
	SITE	HANFORD
	AREA	200E
	BUILDING No.	25,25A

	BY	DATE
ORIGINATOR	[illegible]	2/7/2014
CHECKER	[illegible]	3/3/2016
APPROVER	[illegible]	3/4/2016
REVIEWER	[illegible]	3/3/2016

CONTENT APPLICABLE TO ALARA? [X] YES [ ] NO
ADR NO. 24590-BOF-ADR-PL-15-0001 REV: 2

RIVER PROTECTION PROJECT
WASTE TREATMENT PLANT
2435 STEVENS CENTER PLACE
RICHLAND, WA 99354

CONTRACT No: DE-AC27-01RV14136

BALANCE OF FACILITIES
LAW EFFLUENT PROCESS BLDG & LAW EFFLUENT DRAIN TANK BLDG
GENERAL ARRANGEMENT PLAN AT ELEV. 0'-0"

SCALE: 1"=10'-0"
24590-BOF-P1-25-00001
REV 0

FORM E_SDN.DGN 02/2009
"E" SIZE - 44x34
COMPUTER GENERATED - MANUAL DESIGN CHANGES NOT PERMITTED
R11762963
3/3/2016 1:22:24 PM
c:\work\jcenter\smd87077\24590-BOF-P1-25-00001 (E).dgn

R11802055

24590-CM-HC4-HXYG-00240-02-00017 REV 00A

ISSUED BY
RPP-WTP PDC

AREVA

AFS-16-0254

October 25, 2016

Ms. Tess Klatt
Subcontract Administrator
Bechtel National, Inc.
2435 Stevens Center Place
Richland, Washington 99354

Dear Ms. Klatt:

BECHTEL NATIONAL, INC. CONTRACT NO. 24590-CM-HC4-HXYG-00240 IQRPE STRUCTURAL INTEGRITY ASSESSMENT REPORT FOR LAW DFLAW EMF SECONDARY CONTAINMENT (IA-3018007-000)

The integrity assessment of the LAW DFLAW EMF Secondary Containment has been completed per the contract requirements and is enclosed for your use. The assessment found that the design is sufficient to ensure that the Secondary Containment rooms are adequately designed and have sufficient structural strength, compatibility with the waste(s) to be processed/stored/treated, and corrosion protection to ensure that they will not collapse, rupture, or fail.

If you have any questions, please contact Tarlok Hundal at (509) 371-1975, or via email at tarlok.hundal@areva.com.

Sincerely,

Elizabeth W. Smith, C.P.M
Contract Administrator
AREVA Federal Services LLC
Richland Office

Enclosure (1)

lap

cc: D. C. Pfluger, MS12-2A w/enclosure (1)

IQRPE STRUCTURAL INTEGRITY ASSESSMENT REPORT FOR LAW DFLAW EMF SECONDARY CONTAINMENT

Please note that source, special nuclear and byproduct materials, as defined in the Atomic Energy Act of 1954 (AEA), are regulated at the U.S. Department of Energy (DOE) facilities exclusively by DOE acting pursuant to its AEA authority. DOE asserts, that pursuant to the AEA, it has sole and exclusive responsibility and authority to regulate source, special nuclear, and byproduct materials at DOE-owned nuclear facilities. Information contained herein on radionuclides is provided for process description purposes only.

IQRPE STRUCTURAL INTEGRITY ASSESSMENT REPORT
FOR
LAW DFLAW EMF SECONDARY CONTAINMENT

"I, Tarlok Singh Hundal, have reviewed and certified a portion of the design of a new tank system or component located at the Hanford Waste Treatment Plant, owned/operated by Department of Energy, Office of River Protection, Richland, Washington. My duties were independent review of the current design for the LAW DFLAW EMF Secondary Containment, as required by the Washington Administrative Code, *Dangerous Waste Regulations*, Section WAC-173-303-640(3) (a) through (g) applicable components."

"I certify under penalty of law that I have personally examined and am familiar with the information submitted in this document and all attachments and that, based on my inquiry of those individuals immediately responsible for obtaining the information, I believe that the information is true, accurate, and complete. I am aware that there are significant penalties for submitting false information, including the possibility of fine and imprisonment."

The documentation reviewed indicates that the design fully satisfies the requirements of the WAC.

The attached review is thirteen (17) pages numbered one (1) through seventeen (17).

T S Hundal
Signature

10/25/2016
Date

Scope	Scope of this Integrity Assessment	This Integrity Assessment addresses the Dangerous Waste Permit (DWP) affecting Secondary Containment for LAW Direct Feed Effluent Management Facility (DFLAW EMF) consisting of the Effluent Drain Tank Building and the Effluent Process Building. The DWP affecting rooms considered in this assessment report are as listed in 24590-BOF-M0C-DEP-00001 and as shown on the General Arrangement Plan drawing 24590-BOF-P1-25-00001 listed under the References below. The DWP affecting rooms identified are: Room ED-B001 at Floor Elevation (-) 39'-0" of the Effluent Drain Tank Building. Rooms E-0102, E-0103, E-0105, and E-0106 at Floor Elevation 0'-0" of the Effluent Process Building.
Summary of Assessment		For each item of "Information Assessed" (i.e., Criteria) on the following pages, the items listed under "Source of Information" were reviewed and found to furnish adequate design requirements and controls to ensure that the design fully satisfies the requirements of Washington Administrative Code (WAC), Chapter 173-303 WAC, *Dangerous Waste Regulations*, WAC-173-303-640, *Tank Systems*.

References	Drawings	24590-BOF-P1-25-00001, Rev. 0, Balance of Facilities LAW Effluent Process Bldg & LAW Effluent Drain Tank Bldg. General Arrangement Plan at Elev. 0'-0"; 24590-BOF-P1-25-00002, Rev. 0, Balance of Facilities LAW Effluent Process Bldg & LAW Effluent Drain Tank Bldg. General Arrangement Sections A, B, & C; 24590-BOF-A5-25-05200001, Rev. 0, LAW Effluent Process Bldg. 25 & Drain Tank Bldg. 25A, Architectural Room Finish Schedule; 24590-BOF-CE-25-00001, Rev. 0, LAW Effluent Drain Tank Building Excavation and Mudmat Plan; 24590-BOF-CE-25-00002, Rev. 0, LAW Effluent Drain Tank Building Excavation and Mudmat Sections and Details; 24590-BOF-CE-25-00003, Rev. 1, LAW Effluent Process, Utility, Electrical, Drain Tank Bldg and Stack Excavation Plan; 24590-BOF-CE-25-00004, Rev. 1, LAW Effluent Process, Utility, Electrical, Drain Tank Bldg and Stack Sections and Details; 24590-BOF-D0-25-00001, Rev. 0, Effluent Management Facility Civil/Structural Standards General and Concrete Notes; 24590-BOF-DB-25-00001, Rev. 0, LAW Effluent Process Bldg. 25 Drain Tank Bldg. 25A, Concrete Forming Overall Key Plan; 24590-BOF-DB-25-00002, Rev. 0, LAW Effluent Process Bldg. 25 Concrete Forming Key Plan, El. 0'-0"; 24590-BOF-DB-25-00020, Rev. 1, LAW Effluent Process Bldg. 25 Concrete Forming Partial Plan at El. 0'-0" Zone 2; 24590-BOF-DB-25-00021, Rev. 1, LAW Effluent Process Bldg. 25 Concrete Forming Partial Plan at El. 0'-0" Zone 3; 24590-BOF-DB-25-00023, Rev. 1, LAW Effluent Process Bldg. 25 Concrete Forming Partial Plan at El. 0'-0" Zone 5; 24590-BOF-DB-25-00024, Rev. 1, LAW Effluent Process Bldg. 25 Concrete Forming Partial Plan at El. 0'-0" Zone 6; 24590-BOF-DB-25-00030, Rev. 1, LAW Effluent Process Bldg. 25 Concrete Forming Section Column Line A; 24590-BOF-DB-25-00031, Rev. 1, LAW Effluent Process Bldg. 25 Concrete Forming Section Column Line B; 24590-BOF-DB-25-00032, Rev. 1, LAW Effluent Process Bldg. 25 Concrete Forming Section Column Line D; 24590-BOF-DB-25-00033, Rev. 1, LAW Effluent Process Bldg. 25 Concrete Forming Section Column Line 4; 24590-BOF-DB-25-00034, Rev. 1, LAW Effluent Process Bldg. 25 Concrete Forming Section Column Lines 6 and 7; 24590-BOF-DB-25-00035, Rev. 1, LAW Effluent Process Bldg. 25 Concrete Forming Section Column Line 10.4; 24590-BOF-DB-25-00036, Rev. 1, LAW Effluent Process Bldg. 25 Concrete Forming Section Column Line 12; 24590-BOF-DB-25-00100, Rev. 0, LAW Effluent Drain Tank Building 25A Concrete Forming Plan-Zone 1 @ El. (-) 39'-0"; 24590-BOF-DB-25-00103, Rev. 0, LAW Effluent Drain Tank Building 25A Concrete Forming Sections-Zone 1; 24590-BOF-DD-25-00001, Rev. 0, Effluent Management Facility Standard Embedded Item Details; 24590-BOF-DD-25-00004, Rev. 0, Effluent Management Facility Vessel Support Ring Beam Details; 24590-BOF-DD-25-00010, Rev. 0, Effluent Management Facility Liner Plate Grillage Sections and Details: 24590-BOF-DD-25-00012, Rev. 0, Effluent Management Facility Concrete Embedment Details Vessel Support Ring Beam Installation: 24590-BOF-DD-25-00013, Rev. 0, Effluent Management Facility Embedded Stanchion Details: 24590-BOF-DD-25-00014, Rev. 0, Effluent Management Facility 24" Dia. Sump With Grate Cover Sections and Details; 24590-BOF-DD-25-00015, Rev. 0, Effluent Management Facility 24" Dia. Sump in Secondary Containment Sections and Details; 24590-BOF-DD-25-00016, Rev. 1, Effluent Management Facility Concrete Embedment Details;

References (cont'd)	Drawings	24590-BOF-DD-25-00020, Rev. 1, LAW Effluent Process Bldg. 25, Concrete Embedments Partial Plan at El. 0'-0" Zone 2; 24590-BOF-DD-25-00021, Rev. 1, LAW Effluent Process Bldg. 25, Concrete Embedments Partial Plan at El. 0'-0" Zone 3; 24590-BOF-DD-25-00022, Rev. 1, LAW Effluent Process Bldg. 25, Concrete Embedments Partial Plan at El. 0'-0" Zone 4; 24590-BOF-DD-25-00023, Rev. 1, LAW Effluent Process Bldg. 25, Concrete Embedments Partial Plan at El. 0'-0" Zone 5; 24590-BOF-DD-25-00024, Rev. 1, LAW Effluent Process Bldg. 25, Concrete Embedments Partial Plan at El. 0'-0" Zone 6; 24590-BOF-DD-25-00028, Rev. 1, LAW Effluent Process Bldg. 25, Concrete Embedments Key Plan @ El. 0'-0"; 24590-BOF-DD-25-00100, Rev. 0, LAW Effluent Process Bldg. 25, Concrete Embedments Plan-Zone 1 @ El. (-) 39'-0"; 24590-BOF-DG-25-00001, Rev. 1, LAW Effluent Process Building 25, Concrete Reinforcement Plan @ El. 0'-0"; 24590-BOF-DG-25-00003, Rev. 1, LAW Effluent Process Building 25, Concrete Reinforcement Sections and Details Sheet 1; 24590-BOF-DG-25-00004, Rev. 1, LAW Effluent Process Building 25, Concrete Reinforcement Sections and Details Sheet 2; 24590-BOF-DG-25-00005, Rev. 1, LAW Effluent Process Building 25, Concrete Reinforcement Sections and Details Sheet 3; 24590-BOF-DG-25-00100, Rev. 0, LAW Effluent Drain Tank Building 25A, Concrete Reinforcing Plan-Zone 1 @ El. (-) 39'-0"; 24590-BOF-DG-25-00103, Rev. 0, LAW Effluent Drain Tank Building 25A, Concrete Reinforcing Sections-Zone 1; 24590-BOF-M6-DEP-00009001, Rev. 0, P&ID-BOF/EMF Direct Feed LAW EMF Process System Process Area Sumps DEP-SUMP-00002A/B; 24590-BOF-M6-DEP-00009002, Rev. 0, P&ID-BOF/EMF Direct Feed LAW EMF Process System Process Area Sumps DEP-SUMP-00004A/B; 24590-BOF-M6-DEP-00009004, Rev. 0, P&ID-BOF/EMF Direct Feed LAW EMF Process System Process Area Sumps DEP-SUMP-00003A/B; 24590-BOF-M6-DEP-00009005, Rev. 0, P&ID-BOF/EMF Direct Feed LAW EMF Process System Process Area Sumps DEP-SUMP-00005A/B; 24590-BOF-M6-DEP-00001002, Rev. 0, P&ID-BOF/EMF Direct Feed LAW EMF Process System Low Point Drain Vessel Pumps DEP-PMP-00001A/B.

Information		Source of Information	Assessment
Foundation Design	Description of subsurface conditions and soil bearing capacity are adequate.	24590-BOF-PER-M-16-003, Rev. 0, Dangerous Waste Permit (DWP) Liner Heights in the Effluent Management Facility (EMF); 24590-BOF-M0C-DEP-00001, Rev. B, Liner Height Calculations in the EMF; 24590-WTP-DC-ST-01-001, Rev. 13, Structural Design Criteria; 24590-BOF-3PS-CE00-T0001, Rev. 0, Technical Specification for Site Work; 24590-BOF-3PS-CE01-T0001, Rev. 7, Engineering Specification for Excavation and Backfill; 24590-BOF-3PS-CE01-T0002, Rev. 0, Engineering Specification for Installation of Drilled Shafts & Cast-in-Place Caissons; 24590-BOF-3PS-CP00-T0001, Rev. 0, Engineering Specification for Shoring for Deep Excavation; 24590-BOF-3PS-C000-T0001, Rev. 6, Engineering Specification for Material Testing Services; 24590-BOF-S0C-25-00001, Rev. A, LAW Effluent Process Building Load Case Load Combination Development; 24590-BOF-S0C-25-00002, Rev. B, LAW Effluent Process Building Finite Element Model; 24590-BOF-DBC-25-00001, Rev. A, LAW Effluent Process Concrete Basemat and Wall Design; 24590-BOF-DBC-25-00002, Rev. A, LAW Effluent Drain Tank Building Design; WTSC99-1036-42-17, Final Report Geotechnical Investigation, Shannon & Wilson Inc. (H-1616-51); CCN 179563, Report of Supplementary Geotechnical Engineering Study, RPP-WTP, Hanford Site, Richland, WA, April 2001; 24590-WTP-RPT-CSA-16-001, Rev. 0, Geotechnical Evaluation of EMF Facilities Excavation and Backfill Operations and Design Recommendations.	The Dangerous Waste Permit document lists the rooms at various elevations in EMF buildings requiring the secondary containment. Details of the secondary containment requirements in each room are identified in the above document. The Structural Design Criteria adequately presents design guidance for concrete basemat and walls, based on the Geotechnical Investigation (GI) report, Geotechnical Engineering Study (GES), and Geotechnical Evaluation (GE) reports for the site. The GI report concluded that the liquefaction of the subsurface soil is unlikely during an earthquake event because the ground water table is about 275 ft below the ground surface at the WTP facility. The allowable bearing capacities for Hanford Upper Sand and Structural Fill are listed as 5 ksf. Use of the loose wind blown (dune) sands for foundations is precluded. The design calculations of EMF Basemat and Drain Tank reviewed indicate that the 5 ksf allowable soil bearing capacity of subsurface soil below the foundation mat is more than the maximum computed values. The Specifications listed in the Source of Information column provide excavation and shoring requirements for appropriate application. These Specifications also provide requirements for installation of structural backfill based on the GI report. Appropriate current codes and standards are listed for selection, placing, and compacting structural backfill including testing of candidate fill materials and completed backfills. The Specification for Material Testing Services provides current adequate codes and standards for testing of candidate structural fill materials and in-situ testing of structural fills as they are constructed. Review of the design calculations shows that appropriate values of the soil parameters including allowable bearing capacity were used for the design of secondary containment structures.

	Information	Source of Information	Assessment
Foundation Design (cont'd)	Foundation design loads (including full tanks) and estimated settlement are adequately considered.	24590-WTP-DC-ST-01-001, Rev. 13, Structural Design Criteria; ASCE 7-98, Minimum Design Loads for Buildings and Other Structures; ACI 318-99, Building Code Requirements for Structural Concrete, American Concrete Institute; UBC 1997, Uniform Building Code, International Conference of Building Officials; 24590-BOF-DBC-25-00001, Rev. A, LAW Effluent Process Concrete Basemat and Wall Design; 24590-BOF-DBC-25-00002, Rev. A, LAW Effluent Drain Tank Building Design.	The Structural Design Criteria uses current adequate standards to define design loads and load combinations (ASCE 7-98, UBC 1997, and ACI 318-99). Dead and fluid loads are included in these loads and load combinations. Settlement design parameters are included in Section 7.8 of the Structural Design Criteria. Review of the design calculations for floor slabs shows that the full loads of the tanks and other applicable equipment including the applicable seismic loads and displacements induced forces from other components and soil loads have been appropriately considered in the foundation design.

	Information	Source of Information	Assessment
Foundation Design (cont'd)	Design calculation approach and design basis of footings with design standard references (e.g., ACI) are adequate.	Drawing listed above under References; 24590-BOF-3ZD-25-00001, Rev. 0, WTP Direct Feed Low Activity Waste (DFLAW) Facility and System Design Descriptions; 24590-WTP-DC-ST-01-001, Rev. 13, Structural Design Criteria; ACI 318-99, Building Code Requirements for Structural Concrete, American Concrete Institute; UBC 1997, Uniform Building Code, International Conference of Building Officials; 24590-WTP-PER-CSA-02-001, Rev. 11, Secondary Containment Design; 24590-BOF-DBC-25-00001, Rev. A, LAW Effluent Process Concrete Basemat and Wall Design; 24590-BOF-DBC-25-00002, Rev. A, LAW Effluent Drain Tank Building Design; 24590-LAW-SSC-S15T-00025, Rev. 0, Tank Base Ring Design, Elevation + 2'-3"; 24590-BOF-S0C-25-00001, Rev. A, LAW Effluent Process Building Load Case and Load Combination Development; 24590-BOF-S0C-25-00002, Rev. A, LAW Effluent Process Building Finite Element Model; 24590-BOF-DDC-25-00001, Rev. A, LAW Effluent Process and Drain Tank Buildings Vessels Support Anchorage Design; 24590-BOF-DDC-25-00003, Rev. A, LAW Effluent Process Building Evaporator and Equipment Support Anchorage Design; 24590-WTP-UIF-CSA-10-0001, Rev. 4, User Information Form for GTSTRUDL, Version 30 (V&V Document).	The DFLAW Facility and System Design Descriptions document and drawings list the DFLAW facility as Quality Level (CM) and Seismic Category (SC-IV) structure. The Structural Design Criteria references current adequate design criteria for the design of concrete foundations and footings. ACI 318-99 and UBC 1997 codes are referenced for the strength design of commercial grade structures. The Secondary Containment Design document provides the design approach, basis, and methodology used for the design of the secondary containment foundations/footings. The input parameters used in the GTSTRUDL computer code utilized for this secondary containment design are appropriate and the output results have been appropriately validated via the Verification & Validation (V & V) document. Review of the requirement documents and design calculations shows that the design basis and approach, methodology, and the codes and standards used are appropriate for the foundation design to adequately withstand the applicable loads including the seismic and soil loads.

	Information	Source of Information	Assessment
Foundation Design (cont'd)	Foundation material is compatible with the soil.	24590-WTP-3PS-D000-T0001, Rev. 8, Engineering Specification for Concrete Work, including SCN 24590-WTP-3PN-D000-00020; 24590-WTP-3PS-DB01-T0001, Rev. 8, Engineering Specification for Furnishing and Delivering Ready-Mix Concrete, including SCN 24590-WTP-3PN-DB01-00014; 24590-BOF-3PS-C000-T0001, Rev. 6, Engineering Specification for Material Testing Services; 24590-WTP-DB-ENG-01-001, Rev. 3, Basis of Design. 24590-WTP-3PS-DG00-T0001, Rev. 6, Engineering Specification for Furnishing of Reinforcing Steel.	The specification documents for Concrete Work and Furnishing and Delivering Ready-Mix Concrete provide adequate current requirements for design, testing, and the selection of coarse and fine aggregates and the procurement of cementitious materials. Adequate test procedures are provided in the Material Testing Services specification for testing candidate aggregates for chemical reactivity. Instructions for mixing and delivering Ready-Mix Concrete are adequate and current. As noted in Section 4.7 of the Basis of Design document, the water table lies more than 250 feet below the ground surface elevation of the DFLAW Facility Site, so there is little reason to expect compatibility problems between the concrete foundations and the site soils.
	Foundation will withstand the effects of frost heave	Drawings listed above under References; 24590-WTP-DC-ST-01-001, Rev. 13, Structural Design Criteria.	The Structural Design Criteria includes adequate provisions to preclude frost heave in the section addressing lateral earth pressure loads. All structural foundations are required to extend into the soil below the frost line to preclude frost heave. The frost line is 30 inches below the finished grade surface, however, the drawings show that the top elevation of the EMF 5 ft. thick concrete slab is 0'-0" and it extends 4'-6" into the soil, which is more the 30 inches frost line depth, and the top of Drain Tank Building slab is at Elev. (-) 39'-0". From aforementioned dimensions, it is concluded that the secondary containment foundations will not be subjected to frost heave effects.

Information		Source of Information	Assessment
Seismic Design	Seismic considerations have been adequately addressed.	24590-WTP-PER-CSA-02-001, Rev. 11, Secondary Containment Design; 24590-WTP-DC-ST-01-001, Rev. 13, Structural Design Criteria; ACI 318-99, Building Code Requirements for Structural Concrete, American Concrete Institute; UBC 1997, Uniform Building Code, International Conference of Building Officials; 24590-BOF-DBC-25-00001, Rev. A, LAW Effluent Process Concrete Basemat and Wall Design; 24590-BOF-DBC-25-00002, Rev. A, LAW Effluent Drain Tank Building Design; 24590-LAW-SSC-S15T-00025, Rev. 0, Tank Base Ring Design, Elevation + 2'-3"; 24590-BOF-S0C-25-00001, Rev. A, LAW Effluent Process Building Load Case and Load Combination Development; 24590-BOF-S0C-25-00002, Rev. A, LAW Effluent Process Building Finite Element Model; 24590-BOF-DDC-25-00001, Rev. A, LAW Effluent Process and Drain Tank Buildings Vessels Support Anchorage Design; 24590-BOF-DDC-25-00003, Rev. A, LAW Effluent Process Building Evaporator and Equipment Support Anchorage Design; 24590-WTP-UIF-CSA-10-0001, Rev. 4, User Information Form for GTSTRUDL, Version 30 (V&V Document).	The Secondary Containment Design document describes and provides references for the design methodology, materials, loads, and load combinations (including seismic loads) for the EMF Buildings secondary containment. The Structural Design Criteria provides detailed discipline specific codes and standards for the design of Seismic Category (SC-IV) EMF secondary containment foundations and structures by the design engineers. ACI 318-99 and UBC 1997 provide the design codes and load combinations for design of the secondary containment reinforced concrete foundations and structures. UBC 1997 is used for guidance on seismic analysis of SC-IV structures. The GTSTRUDL structural software code is used for concrete design. The codes and standards listed above are adequate and acceptable for addressing seismic considerations. Review of the design calculations shows that the requirements of the applicable codes and standards are appropriately incorporated in these documents and output results were verified per V&V Test Reports. The review also concluded that the secondary containment components including the liner materials are adequately designed to withstand seismic forces and displacements.

	Information	Source of Information	Assessment
Compatibility	The stored waste is compatible with its Secondary Containment and leak detection hardware based on a detailed chemical and physical analysis of the wastes used and other information sources.	Drawings listed above under References; 24590-WTP-DB-ENG-01-001, Rev. 3, Basis of Design; 24590-WTP-PER-M-02-001, Rev. 4, Material Selections for Building Secondary Containment/Leak Detection; 24590-WTP-PER-J-02-002, Rev. 4, Leak Detection in Secondary Containment Systems; 24590-WTP-PER-CSA-02-001, Rev. 11, Secondary Containment Design; 24590-WTP-3PS-AFPS-T0006, Rev. 3, Engineering Specification for Field Applied Special Protective Coatings for Secondary Containment Areas; 24590-WTP-3PS-NLLR-T0002, Rev. 1, Engineering Specification for Furnishing, Detailing, Fabrication, Delivery and Installation of Stainless Steel Liner Plates. 24590-BOF-PER-M-16-003, Rev. 0, Dangerous Waste Permit (DWP) Liner Heights in the Effluent Management Facility (EMF); 24590-BOF-M0C-DEP-00001, Rev. B, Liner Height Calculations in the EMF; 24590-BOF-PER-M-16-001, Rev. 0, Leak Detection Capability in the EMF Facility.	The Basis of Design document states that cells and sumps are appropriately lined and any spills are removed and flushed within 24-hrs or as timely as possible. The Secondary Containment Design document requires the use of stainless steel liner or special protective coatings (SPC) liner for various rooms of the EMF facility. The Liner Heights document provides the required specific liner heights in various rooms. Based on detailed analysis of the corrosive properties of expected waste process operations and evaluation of potential leak scenarios, the Material Selection report identifies appropriate and adequate corrosion resistant materials requirements for Secondary Containment liners, sumps and leak detection equipment. The Engineering Specification for Field Applied Special Protective Coatings provides the selection test criteria used to determine acceptable approved coating systems. These test criteria include chemical resistance endurance requirements and wear abrasion resistance criteria which provides liners compatibility with the wastes considered. The Secondary Containment Design document provides adequate typical construction details for liners including tank anchorage details, stainless steel liner installation details and SPC installation details to be used for Secondary Containment. The DWP affecting rooms are provided with floor sumps, leak detection instrumentation and associate pumps that can transfer the leaked/accumulated liquid waste to process vessels for storage and subsequent processing as shown on the P&ID drawings.

Information		Source of Information	Assessment
Strength	The design shows that the Secondary Containment has sufficient strength and thickness to prevent failure owing to pressure gradients, static head during a release, physical contact with the waste, climatic conditions, and the stress of daily operations (e.g., vehicular traffic).	Drawings listed above under References; 24590-WTP-DC-ST-01-001, Rev. 13, Structural Design Criteria; 24590-WTP-PER-CSA-02-001, Rev. 11, Secondary Containment Design; 24590-WTP-3PS-NLLR-T0002, Rev. 1, Engineering Specification for Furnishing, Detailing, Fabrication, Delivery and Installation of Stainless Steel Liner Plates; 24590-WTP-PER-M-02-001, Rev. 4, Material Selections for Building Secondary Containment/Leak Detection; 24590-WTP-PER-J-02-002, Rev. 4, Leak Detection in Secondary Containment Systems; 24590-BOF-DBC-25-00001, Rev. A, LAW Effluent Process Concrete Basemat and Wall Design; 24590-BOF-DBC-25-00002, Rev. A, LAW Effluent Drain Tank Building Design; 24590-LAW-SSC-S15T-00025, Rev. 0, Tank Base Ring Design, Elevation + 2'-3"; 24590-BOF-S0C-25-00001, Rev. A, LAW Effluent Process Building Load Case and Load Combination Development; 24590-BOF-S0C-25-00002, Rev. A, LAW Effluent Process Building Finite Element Model; 24590-BOF-DDC-25-00001, Rev. A, LAW Effluent Process and Drain Tank Buildings Vessels Support Anchorage Design; 24590-BOF-DDC-25-00003, Rev. A, LAW Effluent Process Building Evaporator and Equipment Support Anchorage Design; 24590-BOF-DDC-25-00004, Rev. A, LAW Effluent Process and Drain Tank Buildings Sumps and Liner Grillage Anchorage Design; 24590-WTP-UIF-CSA-10-0001, Rev. 4, User Information Form for GTSTRUDL, Version 30 (V&V Document).	Because the Rooms ED-B001, E-0102, and E-0103 Secondary Containment structures being considered are installed within the boundary walls of the EMF Buildings as shown on the general arrangement drawings, climatic conditions and vehicular traffic are not applicable load cases. However, Rooms E-0105 and E-0106 are located outside the EMF Process Building, therefore, are subjected to climatic conditions, but not to any vehicular traffic. The Secondary Containment design requirements document identifies adequate and appropriate design codes and standards and all applicable load cases (operational stresses) from site specific conditions have been considered in the design. The Engineering Specification for Furnishing Stainless Steel Liner Plates includes specific provisions for protection of and repair of completed liners during the construction process. Factors that were considered during stainless steel liner material selection and special protective coating (SPC) material selection are adequately discussed in the Material Selections for Building Secondary Containment/Leak Detection document. Review of the design calculations shows that the secondary containment structures are designed appropriately with sufficient strength to sustain the applicable loads.

Information		Source of Information	Assessment
Strength (cont'd)	The Secondary Containment system has sufficient strength in the presence of operational stresses from site-specific conditions (i.e., traffic, heavy equipment, precipitation, frost).	Drawings listed above under References; 24590-WTP-DC-ST-01-001, Rev. 13, Structural Design Criteria; 24590-WTP-PER-CSA-02-001, Rev. 11, Secondary Containment Design; 24590-WTP-3PS-AFPS-T0006, Rev. 3, Engineering Specification for Field Applied Special Protective Coatings for Secondary Containment Areas; 24590-WTP-3PS-NLLR-T0002, Rev. 1, Engineering Specification for Furnishing, Detailing, Fabrication, Delivery and Installation of Stainless Steel Liner Plates; 24590-WTP-PER-M-02-001, Rev. 4, Material Selections for Building Secondary Containment/Leak Detection; 24590-WTP-PER-J-02-002, Rev. 4, Leak Detection in Secondary Containment Systems; 24590-BOF-DBC-25-00001, Rev. A, LAW Effluent Process Concrete Basemat and Wall Design; 24590-BOF-DBC-25-00002, Rev. A, LAW Effluent Drain Tank Building Design; 24590-LAW-SSC-S15T-00025, Rev. 0, Tank Base Ring Design, Elevation + 2'-3"; 24590-BOF-S0C-25-00001, Rev. A, LAW Effluent Process Building Load Case and Load Combination Development; 24590-BOF-S0C-25-00002, Rev. A, LAW Effluent Process Building Finite Element Model; 24590-BOF-DDC-25-00001, Rev. A, LAW Effluent Process and Drain Tank Buildings Vessels Support Anchorage Design; 24590-BOF-DDC-25-00003, Rev. A, LAW Effluent Process Building Evaporator and Equipment Support Anchorage Design; 24590-BOF-DDC-25-00004, Rev. A, LAW Effluent Process and Drain Tank Buildings Sumps and Liner Grillage Anchorage Design; 24590-WTP-UIF-CSA-10-0001, Rev. 4, User Information Form for GTSTRUDL, Version 30 (V&V Document).	The Secondary Containment Design requirements document identifies adequate and appropriate design codes and standards and all applicable load cases (operational stresses) from site specific conditions that must be considered in the design. The secondary containment rooms listed in the Scope section above are shown on the general arrangement plan drawings of the EMF facility. Room ED-B001 is located at floor Elevation (-) 39'-0" of the Drain Tank Building and Rooms E-0102, E-0103 are located inside the EMF process on floor Elevation 0'-0." The aforementioned three rooms are inside the buildings which protect them from the precipitation and surface water percolation. Rooms E-0105 and E-0106 are outside of the covered portion of the he EMF process building, which are subjected to precipitation and outside moisture. None of the rooms are subjected to traffic, movement of heavy equipment, and frost are not applicable load cases. The Specification for Furnishing Stainless Steel Liner Plates and the Specification for Field Applied Special Protective Coatings for Secondary Containment Areas include specific provisions for protection and repair of completed liners during the construction process. The room finish schedule drawing identifies the specific liner materials used for secondary containment rooms. Review of the design calculations shows that the secondary containment structures are designed appropriately with sufficient strength to sustain the applicable loads from the specific conditions. Factors that were considered during stainless steel liner material selection and SPC liner material selection are adequately discussed in the Material Selections for Building Secondary Containment/Leak Detection document.

	Information	Source of Information	Assessment
Foundation Integrity	The Secondary Containment is properly supported by a foundation or base in order to prevent failure from settlement, compression, or uplift, including the residual effects of installation.	Drawings listed above under References; 24590-WTP-DC-ST-01-001, Rev. 13, Structural Design Criteria; 24590-BOF-3PS-CE00-T0001, Rev. 0, Technical Specification for Site Work. 24590-WTP-3PS-D000-T0001, Rev. 8, Engineering Specification for Concrete Work, including SCN # 24590-WTP-3PN-D000-00020; 24590-BOF-3PS-CE01-T0001, Rev. 7, Engineering Specification for Excavation and Backfill; 24590-BOF-3PS-C000-T0001, Rev. 6, Engineering Specification for Material Testing Services; 24590-WTP-PER-CSA-02-001, Rev. 11, Secondary Containment Design. 24590-BOF-DBC-25-00001, Rev. A, LAW Effluent Process Concrete Basemat and Wall Design; 24590-BOF-DBC-25-00002, Rev. A, LAW Effluent Drain Tank Building Design; 24590-LAW-SSC-S15T-00025, Rev. 0, Tank Base Ring Design, Elevation + 2'-3"; 24590-BOF-S0C-25-00001, Rev. A, LAW Effluent Process Building Load Case and Load Combination Development; 24590-BOF-S0C-25-00002, Rev. A, LAW Effluent Process Building Finite Element Model; 24590-BOF-DDC-25-00001, Rev. A, LAW Effluent Process and Drain Tank Buildings Vessels Support Anchorage Design; 24590-BOF-DDC-25-00003, Rev. A, LAW Effluent Process Building Evaporator and Equipment Support Anchorage Design; 24590-BOF-DDC-25-00004, Rev. A, LAW Effluent Process and Drain Tank Buildings Sumps and Liner Grillage Anchorage Design; 24590-WTP-UIF-CSA-10-0001, Rev. 4, User Information Form for GTSTRUDL, Version 30 (V&V Document).	These conditions are fully addressed in the Structural Design Criteria and the Secondary Containment Design requirements documents. The design requirements and codes and standards specified are adequate to satisfy the performance goals. The procurement and construction specifications adequately provide for proper foundation construction and installation of the Secondary Containment. The general arrangement plans and the associated design drawings show the secondary containment boundaries. The design calculations reviewed show that the foundation slabs are appropriately designed and will not fail when subjected loads such as uplift, installation, settlement or residual effects.

Information		Source of Information	Assessment
Foundation Integrity (cont'd)	The placement, structural support, and type of material used for backfill around and below the Secondary Containment are appropriate.	Drawings listed above under References; 24590-BOF-3PS-CE01-T0001, Rev. 7, Engineering Specification for Excavation and Backfill; 24590-BOF-3PS-C000-T0001, Rev. 6, Engineering Specification for Material Testing Services; 24590-WTP-RPT-CSA-16-001, Rev. 0, Geotechnical Evaluation of EMF Facilities Excavation and Backfill Operations and Design Recommendations; 24590-BOF-DBC-25-00001, Rev. A, LAW Effluent Process Concrete Basemat and Wall Design; 24590-BOF-DBC-25-00002, Rev. A, LAW Effluent Drain Tank Building Design;	The Excavation and Backfill and Material Testing specifications contain current adequate industry standards for selecting and testing fill materials, placing and compacting backfills, and testing not less than once each lift to assure adequate compaction. Drawings and daily field document reports show that excavation and structural backfill requirements are properly applied, tested, documented, and accepted and approved by BNI to comply with the requirements listed in the Geotechnical Evaluation document. Review of the design calculations shows that appropriate parameters for structural backfill and soil are used in design.

	Information	Source of Information	Assessment
Infiltration	The design or operation (e.g., diking & curbing) prevents run-on or infiltration of precipitation into the Secondary Containment system unless the collection system has sufficient excess capacity (25-year, 24-hour rainfall event) to contain the run-on precipitation.	Drawings listed above under References; 24590-WTP-DB-ENG-01-001, Rev. 3, Basis of Design. CCN 179563, Report of Supplementary Geotechnical Engineering Study, RPP-WTP, Hanford Site, Richland, WA, April 2001; 24590-BOF-PER-M-16-003, Rev. 0, Dangerous Waste Permit (DWP) Liner Heights in the Effluent Management Facility (EMF); 24590-BOF-M0C-DEP-00001, Rev. B, Liner Height Calculations in the EMF.	This requirement is specified in the Basis of Design document. The secondary containment rooms listed in the Scope section above are shown on the general arrangement plan drawings of the EMF facility. Room ED-B001 is located at floor Elevation (-) 39'-0" of the Drain Tank Building and Rooms E-0102, E-0103 are located inside the EMF Process Building on floor Elevation 0'-0." Since these rooms are inside the buildings which protect them from the precipitation and surface water percolation. Rooms E-0105 and E-0106 are outside the covered portion of the EMF Process Building, which are subjected to rainfall accumulation. The Liner Heights document accounts for the rainfall in these rooms. The CCN 179563 document describes that the ground water table at the WTP site is about 275 ft. below the ground surface, which makes it unlikely event for water infiltration or intrusion into the EMF buildings.

	Information	Source of Information	Assessment
Infiltration (cont'd)	The design includes an external moisture barrier or other means to prevent moisture from entering the cell.	Drawings listed above under References; 24590-WTP-RPT-CSA-16-001, Rev. 0, Geotechnical Evaluation of EMF Facilities Excavation and Backfill Operations and Design Recommendations; 24590-WTP-3PS-NLLR-T0002, Rev. 1, Engineering Specification for Furnishing, Detailing, Fabrication, Delivery and Installation of Stainless Steel Liner Plates; 24590-WTP-3PS-AFPS-T0006, Rev. 3, Engineering Specification for Field Applied Special Protective Coatings for Secondary Containment Areas; 24590-WTP-PER-CSA-02-001, Rev. 11, Secondary Containment Design; 24590-WTP-3PS-D000-T0001, Rev. 8, Engineering Specification for Concrete Work; 24590-BOF-PER-M-16-001, Rev. 0, Leak Detection Capability in the EMF Facility; 24590-BOF-PER-M-16-002, Rev. 0, Waste Removal Capability for the Direct Feed LAW Effluent Management Facility (EMF).	The secondary containment rooms listed in the Scope section above are shown on the general arrangement plan drawings at floor Elevations (-) 39'-0" and 0'-0" are located in the EMF facility. Rooms ED-B001, E-0102, E-0103 are inside the buildings which protect them from the precipitation and surface water percolation. Rooms E-0105 and E-0106 are outside of the covered portion of the EMF facility, which are subjected to rainfall precipitation. The Geotechnical Evaluation document states that the ground water table at the WTP site is located about 275 ft. below the ground surface; therefore, infiltration of external moisture into the interior of the EMF buildings is not a credible event. Even though the infiltration of external moisture is not a credible case, all concrete construction joints are provided with chemical-resistant waterstops which will also stop leakage of dangerous waste to outside environment. The details of the specified waterstops are as shown on the Secondary Containment Design document and applicable drawings. For further mitigation of any waste leakage to outside, the subject Secondary Containment rooms as shown on the drawings are lined with stainless steel plates or special protective coating (SPC) material. The sumps in these rooms are equipped with waste leak detection and timely removal capability instrumentation and equipment. It is noteworthy to note that the deep Drain Tank Building walls are poured against the left-in-place shotcreted soldier pile system, which is an added assurance against moisture infiltration from the outside. The EMF Process Building perimeter walls rest on the top of a 5 ft. thick concrete slab at Elev. 0'-0" which is 6" above the grade elevation around the building. Therefore, moisture infiltration is not a credible case.

Information		Source of Information	Assessment
Liner System	The containment area is free of cracks or gaps and the design discusses methods of their minimization.	Drawings listed above under References; 24590-WTP-PER-CSA-02-001, Rev. 11, Secondary Containment Design; 24590-WTP-3PS-NLLR-T0002, Rev. 1, Engineering Specification for Furnishing, Detailing, Fabrication, Delivery and Installation of Stainless Steel Liner Plates; 24590-WTP-3PS-AFPS-T0006, Rev. 3, Engineering Specification for Field Applied Special Protective Coatings for Secondary Containment Areas.	The Secondary Containment Design requirements document provides adequate and appropriate codes and standards for design of leak-tight liners. This report includes appropriate details for design and installation of stainless steel and special protective coating liners and sumps free of cracks and gaps. The Engineering Specification for Furnishing, Detailing, Fabrication, Delivery and Installation of Stainless Steel Liner Plates provides detailed information on design, fabrication, installation, and inspection of stainless steel liners and sumps. The Engineering Specification for Field Applied Special Protective Coatings provides detailed information on the tested and approved coating systems. This information includes directions for surface preparation, patching materials and application methods, and specific directions for application of multi-layer coatings. From the review of the drawings and the documents listed in the Sources of Information column, it is concluded that the liner materials used and applied are adequate.

	Information	Source of Information	Assessment
Liner System (cont'd)	The design has considered the compatibility of the concrete liner or coatings and waste and presents information on coatings planning to be used from the manufacturer addressing compatibility with the stored waste. The lining or coating must prevent the waste from migrating into the concrete.	Drawings listed above under References; 24590-WTP-PER-M-02-001, Rev. 4, Material Selections for Building Secondary Containment/Leak Detection; 24590-WTP-PER-J-02-002, Rev. 4, Leak Detection in Secondary Containment Systems; 24590-WTP-PER-CSA-02-001, Rev. 11, Secondary Containment Design; 24590-WTP-3PS-NLLR-T0002, Rev. 1, Engineering Specification for Furnishing, Detailing, Fabrication, Delivery and Installation of Stainless Steel Liner Plates; 24590-WTP-3PS-AFPS-T0006, Rev. 3, Engineering Specification for Field Applied Special Protective Coatings for Secondary Containment Areas.	The Material Selections document contains adequate and appropriate general information on the compatibility of planned Secondary Containment stainless steel and special protective coating liners with the waste. The Secondary Containment Design document and drawings provide adequate and appropriate standard details for design and installation of stainless steel and special protective coating liners that will prevent migration of the waste into the concrete. The Engineering Specification for Furnishing, Detailing, Fabrication, Delivery and Installation of Stainless Steel Liner Plates provides detailed information on design, fabrication, installation, and inspection of stainless steel liners and sumps. The Engineering Specification for Field Applied Special Protective Coatings (SPC) provides detailed information on the tested and approved coating systems. This information includes directions for surface preparation, patching materials and application methods, and specific directions for application of multi-layer coatings.

Issued by
RPP-WTP PDC

System Logic Description for the Direct Feed LAW Effluent Management Facility Process System (DEP)

Document title:

Document number: 24590-BOF-PER-J-16-001, Rev 0

Contract number: DE-AC27-01RV14136

Department: Controls and Instrumentation

Author(s): Ryan Ricono

Checked by: P. A. Treese

Issue status: Issued for Permitting Use

Approved by: Dennis Huth

Approver's position: DFLAW C&I Engineering Group Supervisor

Approver's signature: _____ 9-21-16

Signature *Date*

This bound document contains a total of 22 sheets

River Protection Project
Waste Treatment Plant
2435 Stevens Center Place
Richland, WA 99354
United States of America
Tel: 509 371 2000

Notice

Please note that source, special nuclear, and byproduct materials, as defined in the Atomic Energy Act of 1954 (AEA), are regulated at the US Department of Energy (DOE) facilities exclusively by DOE acting pursuant to its AEA authority. DOE asserts, that pursuant to the AEA, it has sole and exclusive responsibility and authority to regulate source, special nuclear, and byproduct materials at DOE-owned nuclear facilities. Information contained herein on radionuclides is provided for process description purposes only.

History Sheet

Rev	Reason for revision	Revised by
0	Issued for permitting use	R. Ricono

Contents

Notice ..... **ii**

History Sheet ..... **iii**

Acronyms ..... **v**

Glossary ..... **vi**

1 Introduction **1**

2 Applicable Documents **1**

3 Description **3**

3.1 Below-Grade System Requirements **3**

3.1.1 Low Point Drain Vessel DEP-VSL-00001 3

3.1.2 Low Point Drain Sump DEP-SUMP-00001 4

3.1.3 Leak Detection Boxes 6

3.2 Above-Grade System Requirements **7**

3.2.1 West Process Area Sumps DEP-SUMP-00002A/B 7

3.2.2 East Process Area Sumps DEP-SUMP-00003A/B 8

3.2.3 Evaporator Concentrate Area Sumps DEP-SUMP-00004A/B 9

3.2.4 Process Condensate Area Sumps DEP-SUMP-00005A/B 10

3.2.5 EMF Process Vessels 10

3.2.6 Evaporator 10

Tables

Table 1 Coaxial piping number and description draining into DEP-SUMP-00001 ..... **5**

Table 2 Associated Instruments for DEP Low Point Drain Vessel and Sumps **11**

Figures

Figure 1 Typical Collection Vessel Level Detection **13**

Figure 2 Typical Sump Level Detection **14**

Figure 3 Typical Leak Detection Box Level Detection **15**

Acronyms

AEA	Atomic Energy Act
DIW	demineralized water
DEP	Direct Feed LAW Effluent Management Facility Process (system)
DOE	US Department of Energy
DWP	Dangerous Waste Permit
EMF	Effluent Management Facility
HS	hand switch
LAH	level alarm high
LAHH	level alarm high-high
LAHHH	level alarm high-high-high
LAL	level alarm low
LALL	level alarm low-low
LAW	low-activity waste (facility)
LE	level element
LI	level indicator
LKY	level rate of change calculation
LOL	lower operating limit
LSH	level switch high
LT	level transmitter
MU	Miscellaneous Unit
P&ID	piping and instrumentation diagram
PCJ	process control system
PT	pretreatment (facility)
RTD	resistance temperature detector
SBS	submerged bed scrubber
UOL	upper operating limit
WTP	Hanford Tank Waste Treatment and Immobilization Plant

Glossary

Acquire	Acquire is a command under batch control that reserves a group of equipment for a particular batch control operation.
Actual Volume	Volume of waste/process fluid in any vessel in gallons.
Ancillary Equipment	Any device including, but not limited to, such devices as piping, fittings, flanges, valves, and pumps, that is used to distribute, meter, or control the flow of dangerous waste.
Available Space	Volume of waste/process fluid that any vessel can accommodate and still be lower than the upper operating limit (UOL), in gallons. Available space can be calculated as follows: *Available Space = UOL - Actual Volume*.
Available Volume	Volume of waste/process fluid that any vessel can transfer to another vessel and still be above the lower operating limit (LOL), in gallons. Available volume can be calculated as follows: *Available Volume = Actual Volume - LOL*.
Batch	Batch is the material that is being produced or that has been produced by a single execution of a batch process.
Batch Control	Batch control refers to control activities and control functions that provide an ordered set of processing activities to complete a batch process.
Batch Process	A batch process is a process that leads to the production of finite quantities of material by subjecting quantities of input materials to an ordered set of processing activities over a finite period of time using one or more pieces of equipment.
Continuous Control	Continuous control refers to automatic control activities in which the controlled quantity is measured continuously and corrections are a continuous function of the deviation.
Control System	Control system refers to electronic processors that perform regulatory and logic control functions necessary for normal plant operation.
Exception Handling	Exception handling refers to those functions that deal with plant or process contingencies and other events that occur outside the normal or desired behavior of batch control.
Foundation Fieldbus	A digital, serial, two-way communication system which was selected to network instrumentation within WTP.
Level Alarm High (LAH)	A vessel high-level setpoint used to stop a transfer-in batch operation to a vessel under normal plant operation.
Level Alarm High-High (LAHH)	Refers to a notification in the control system that is activated when the applicable variable reaches a point that is significantly higher than that expected during normal operation. For the equipment which also utilizes a LAHHH point, LAHH is an intermediate point between LAH and LAHHH where action will be taken to prevent additional fluid injection.
Level Alarm High-High-High (LAHHH)	Refers to a notification in the control system that is activated when the applicable variable reaches a point that is significantly higher than that expected during normal operation. This point signifies the maximum fill level.

Level Alarm Low (LAL)	A vessel low-level setpoint used to stop a transfer-out batch operation from a vessel under normal plant operations.
Level Alarm Low-Low (LALL)	Refers to a notification in the control system that is activated when the applicable variable reaches a point that is significantly lower than that expected during normal operation.
Level Rate of Change (LKY)	Refers to a calculation in the control system that monitors how fast the sump is filling with fluid.
Permissive	Interlock that allows a device to change state or a sequence to start. Once a device has changed state or a sequence has started, permissive has no further effect on the device or sequence.
Release	Release is a command under batch control that opens up a group of equipment for any batch control to acquire.
Trip	Interlock that does not allow a device to change state or a sequence to start. Once a device has changed state or a sequence has started, trips continue to have an effect on the device or sequence.

1 Introduction

This document describes the instrument control logic for low level waste sumps and pumps in the Direct Feed LAW Effluent Management Facility Process (DEP) system within the LAW effluent process and drain tank buildings. This document has been prepared as one of the documents that provide tank, ancillary equipment, and leak detection system instrumentation control logic narrative description (e.g., plant installed software documentation, descriptions of fail-safe conditions, etc.) to meet the requirements of permit condition III.10.E.9.d.vii.

The narrative for the eight vessels and the evaporator listed in Section 3.2 will be included in a future revision of this document. The low point drain vessel information provided in this revision is preliminary and will be updated, as required, in a future revision of this document.

2 Applicable Documents

24590-WTP-M6-50-00001	*P&ID Symbols and Legend Sheet 1 of 8*
24590-WTP-M6-50-00002	*P&ID Symbols and Legend Sheet 2 of 8*
24590-WTP-M6-50-00003	*P&ID Symbols and Legend Sheet 3 of 8*
24590-WTP-M6-50-00004	*P&ID Symbols and Legend Sheet 4 of 8*
24590-WTP-M6-50-00005	*P&ID Symbols and Legend Sheet 5 of 8*
24590-WTP-M6-50-00006	*P&ID Symbols and Legend Sheet 6 of 8*
24590-WTP-M6-50-00007	*P&ID Symbols and Legend Sheet 7 of 8*
24590-WTP-M6-50-00008	*P&ID Symbols and Legend Sheet 8 of 8*
24590-BOF-P1-25-00001	*Balance of Facilities LAW Effluent Process Bldg & LAW Effluent Drain Tank Bldg General Arrangement Plan at Elev 0'-0"*
24590-BOF-M6-DEP-00001001	*P&ID – BOF/EMF Direct Feed LAW EMF Process System Low Point Drain Vessel DEP-VSL-00001*
24590-BOF-M6-DEP-00001002	*P&ID – BOF/EMF Direct Feed LAW EMF Process System Low Point Drain Vessel Pumps DEP-PMP-00001A/B*
24590-BOF-M6-DEP-00002006	*P&ID – BOF/EMF Direct Feed LAW EMF Process System Evaporator Concentrate / Feed Vessels Law Effluent Cooler DEP-HX-00001*
24590-BOF-M6-DEP-00009001	*P&ID – BOF/EMF Direct Feed LAW EMF Process System Process Area Sumps DEP-SUMP-00002A/B*
24590-BOF-M6-DEP-00009002	*P&ID – BOF/EMF Direct Feed LAW EMF Process System Process Vessel Area Sumps DEP-SUMP-00004A/B*
24590-BOF-M6-DEP-00009004	*P&ID – BOF/EMF Direct Feed LAW EMF Process System Process Area Sumps DEP-SUMP-00003A/B*
24590-BOF-M6-DEP-00009005	*P&ID – BOF/EMF Direct Feed LAW EMF Process System Process Vessel Area Sumps DEP-SUMP-00005A/B*

24590-BOF-M6-DEP-00010001	*P&ID – BOF/EMF Direct Feed LAW EMF Process System Underground Transfer Lines*
24590-BOF-M6-DEP-00011001	*P&ID – BOF/EMF Direct Feed LAW EMF Process System Effluent Facility Leak Detection DEP-LDB-00001 thru DEP-LDB-00006*

3 Description

The low point drain vessel, described in Section 3.1, provides temporary storage for transfer line flushes, piping drains, and overflow from each of the Effluent Management Facility (EMF) vessels, described within Section 3.2. In addition, effluent from the Lab C3 collection and transfer vessel, as well as the low activity waste (LAW) plant wash, scrubber condensate, and blowdown can be diverted to the drain vessel. A sump (DEP-SUMP-00001) is provided to collect leaks and vessel overflows to support leak detection in the low point drain vessel.

The EMF Dangerous Waste Permit secondary containment sumps provide a means of capturing and transferring leakage or collection of fluids within process rooms and vessel cell areas. EMF DWP sumps are placed throughout the facility in each area which contains process vessels, miscellaneous units (MUs), or process fluids.

3.1 Below-Grade System Requirements

The DEP low level waste equipment located below elevation 0 ft includes the following:

Vessel

- DEP-VSL-00001 Low point drain vessel

Sump

- DEP-SUMP-00001 Low point drain sump

Leak Detection Boxes

- DEP-LDB-00001 LAW effluent leak detection box
- DEP-LDB-00002 LAW feed leak detection box
- DEP-LDB-00003 LAW feed leak detection box
- DEP-LDB-00004 SBS/plant wash transfer leak detection box
- DEP-LDB-00005 Scrubber blowdown leak detection box
- DEP-LDB-00006 LAB effluent leak detection box

3.1.1 Low Point Drain Vessel DEP-VSL-00001

The final design of the low point drain vessel will be documented in a future revision of this document. Included within this section is the preliminary low point drain vessel functionality.

The low point drain vessel is used to collect and contain liquid from the sources described in Section 3.2 and forward the collected liquid to the evaporator feed vessel prefilter for processing. An agitator is used to continuously mix the contents of the low point drain vessel to avoid settling of entrained solids. Two vertical pumps transfer the contents to the evaporator feed vessel prefilter (DEP-FILT-00003) and then on to the evaporator feed vessel (DEP-VSL-00002). A rotating spray nozzle supplied with demineralized water will wash the low point drain vessel when empty.

The low point drain vessel (DEP-VSL-00001) is located at elevation -39 ft, within the enclosed room ED-B001. This room is designated as a R5/R3/C5 area. The vessel overflows to sump DEP-SUMP-00001 in the same room [Hold 1]. This sump is evacuated by pump DEP-PMP-00031 and transferred to the evaporator feed vessel prefilter and then on to the evaporator feed vessel (DEP-VSL-00002) at elevation 0 ft.

Hold: [1] Low Point Drain Vessel overflow line and Low Point Drain Sump demineralized water line are on hold pending design change for dipped overflow and basis calculation.

The liquid level in the low point drain vessel (DEP-VSL-00001) is monitored by a level element (LE-8109) and a level transmitter (LT-8109). The transmitter communicates with the process control system (commonly referred to as the PCJ) and provides a control room indication and alarm on high, high-high, low, and low-low level. A discrete software signal will override stop the agitator on low level. A discrete software signal will override stop the two 100% vertical pumps (DEP-PMP-00001A/B) on low-low level. Additionally, a discrete software signal will close the inlet valves to the low point drain on high-high level.

In the event of any sump level detection alarm, the source of the spill will be identified and isolated; notifications, spill response, and waste removal will be completed in accordance with Hanford Tank Waste Treatment and Immobilization Plant (WTP) Operating and Spill Response procedures. Table 2 depicts typical instrumentation associated with the low point drain vessel. Figure 1 depicts the typical DEP control logic functions.

3.1.2 Low Point Drain Sump DEP-SUMP-00001

The low point drain sump (DEP-SUMP-00001), located within the same R5/R3/C5 room as the low point drain vessel at elevation -39 ft, is used to capture overflow from the low point drain vessel (DEP-VSL-00001). In addition, the transfer line leak detection box drain will discharge to the sump.

The leak detection boxes (see section 3.1.3) will drain into the low point drain sump through the feed line DEP-ZS-00043-S11C-01. Additionally, Table 1 lists the process transfer lines which utilize coaxial piping, each draining an inner pipe leak to the low point drain sump. The sump is equipped with an air driven pump (DEP-PMP-00031) which will transfer the fluid to the evaporator feed vessel prefilter and then on to the evaporator feed vessel (DEP-VSL-00002).

The liquid level in the sump is monitored by a level element (LE-8112) and a level transmitter (LT-8112). The transmitter communicates with the PCJ and provides a control room indication and alarm on high and high-high-high level.

Sump level instrumentation has four alarm points. The first alarm, high level, assumes that the sump starts out completely dry. It alerts the operator at or before the level in the sump reaches 2.4 gallons based on a leak of 0.1 gallons per hour within 24 hours, as provided in permit condition III.10.E.9.e.ii. Once the alarm is received, the sump liquids are transferred by the operator from the sump to the appropriate downstream vessel.

The second alarm point, high level rate of change function (LKY), will calculate any change in fluid level above the first alarm setpoint. The LKY control function shown in Figure 2 detects a change in sump liquid levels. A normally closed pneumatically actuated open/close valve (YV-8117) is used to maintain the level in the loop seal with demineralized water as required [Hold 1]. The manually controlled YV-8117 valve has a discrete software signal to close the valve on the third alarm point, high-high sump level [Hold 1].

The fourth alarm, high-high-high level, will alert the operator that the sump has reached its maximum volume. The operator will investigate the source of the alarm and will transfer any effluent from the sump. The transfer will be stopped by the operator or if the level in the sump reaches its low-low level functional logic control point.

In the event of any sump level detection alarm, the source of the spill will be identified and isolated; notifications, spill response, and waste removal will be completed in accordance with WTP Operating and Spill Response procedures.

Hold: [1] Low Point Drain Vessel overflow line and Low Point Drain Sump demineralized water line are on hold pending design change for dipped overflow and basis calculation.

Table 1 lists the coaxial lines outer wall which drains to the low point drain sump (DEP-SUMP-00001).

The *Process line description* column provides information for the purpose of the line, the *Process line tag number* column provides the tag number provided for the process line, the *Coaxial line tag number* column provides the tag number provided for the coaxial line within the process stream, and the *Piping line tag number to DEP-SUMP-00001* column provides the piping line tag number associated with the drain line from the associated coaxial line.

Table 1 Coaxial piping number and description draining into DEP-SUMP-00001

P&ID	Process line description	Process line tag number	Coaxial line tag number	Piping line tag number to DEP-SUMP-00001
24590-BOF-M6-DEP-00001001	LAB effluent from RLD-VSL-00164	DEP-WU-00001-S11E-03	DEP-WU-00008-W31A-03	DEP-WU-00009-S11E-01
	Sump pump discharge DEP-PMP-00032A/B, 34A/B, 38	DEP-ZS-00266-S11C-03	DEP-ZS-20231-W31A-03	DEP-ZS-20234-S11C-01
	Sampling line return	DEP-ZS-00275-S11C-02	DEP-ZS-20236-W31A-02	DEP-ZS-20238-S11C-01
	Vessel DEP-VSL-00002, 3A/B/C, 4A/B, 5A/B overflow	DEP-ZS-00283-S11C-10	DEP-ZS-20242-W31A-10	DEP-ZS-20244-S11C-01
	Fume hood drain & evaporator drain	DEP-ZS-20194-N11F-04	DEP-ZS-20245-W11A-04	DEP-ZS-20246-N11F-01
	SBS cond/plant wash	DEP-ZS-00009-S11C-03	DEP-ZS-20249-W31A-03	DEP-ZS-20251-S11C-01
	Off-spec evaporator concentrate drain	DEP-ZS-20229-N11F-011/2	DEP-ZS-20282-W11A-011/2	DEP-ZS-20284-N11F-01
	Scrubber blowdown LVP-TK-00001	DEP-ZY-00001-S11C-03	DEP-ZY-00181-W31A-03	DEP-ZY-00183-S11C-01
	Vessel DEP-VSL-00001 vent header	DVP-GV-00029-S11X-03	DVP-GV-00026-W31A-03	DVP-GV-00028-S11X-01
24590-BOF-M6-DEP-00001002	Condensate flush DEP-PMP-00015A/B/C	DEP-ZS-00218-S11C-02	DEP-ZS-20219-W31A-02	DEP-ZS-20220-S11C-01
	Pump discharge line from DEP-PMP-00031, emptying SUMP-00001	DEP-ZS-00022-S11C-02	DEP-ZS-20222-W31A-02	DEP-ZS-20223-S11C-01
	Pump discharge lines from DEP-PMP-00001A/B, emptying VSL-00001	DEP-ZS-00016-S11C-02	DEP-ZS-20225-W31A-02	DEP-ZS-20226-S11C-01
24590-BOF-M6-DEP-00002006	Conditioned effluent	DEP-ZS-20268-S11C-03	DEP-ZS-20265-W31A-03	DEP-ZS-20266-S11C-01
24590-BOF-M6-DEP-00010001	Effluent concentrate DEP-PMP-00003A/B	DEP-ZS-00314-N11F-03	DEP-ZS-20252-W11A-03	DEP-ZS-20217-N11F-01

3.1.3 Leak Detection Boxes

DEP has six leak detection boxes (LDBs) on the headers of the coaxial piping draining into the low point drain sump (DEP-VSL-00001) through the feed line DEP-ZS-00043-S11C-01.

The six LDBs are designed to detect a leak within the annular space of the coaxial line. The LDB is separated into two parts by a weir equipped with a drain plug in the closed position to create a detectable liquid level. A conductivity level switch is used to detect liquid in the LDB, to activate the control system alarms, and to trip supply pumps and associated isolation valves. An overflow plug is provided on the opposite side of the weir in an open position, which prevents overfilling of the leak detection box until it can be drained. Figure 3 shows the alarm function for the conductivity level switch instrument associated with each of the leak detection boxes, which serves as a typical method of operation for all leak detection boxes in the DEP.

In the event of a leak detection high level detection alarm, the source of the spill will be identified and isolated; notifications, spill response, and waste removal will be completed in accordance with WTP Operating and Spill Response procedures.

3.2 Above-Grade System Requirements

The DEP low level waste equipment located at or above elevation 0 ft includes the following:

Sumps

- DEP-SUMP-00002A West process area sump
- DEP-SUMP-00002B West process area sump
- DEP-SUMP-00003A East process area sump
- DEP-SUMP-00003B East process area sump
- DEP-SUMP-00004A Evaporator concentrate area sump
- DEP-SUMP-00004B Evaporator concentrate area sump
- DEP-SUMP-00005A Process condensate area sump
- DEP-SUMP-00005B Process condensate area sump

EMF Process Vessels

- DEP-VSL-00002 Evaporator feed vessel
- DEP-VSL-00003A Evaporator concentrate vessel
- DEP-VSL-00003B Evaporator concentrate vessel
- DEP-VSL-00003C Evaporator concentrate vessel
- DEP-VSL-00004A Overhead sampling vessel
- DEP-VSL-00004B Overhead sampling vessel
- DEP-VSL-00005A Process condensate lag storage vessel
- DEP-VSL-00005B Process condensate lag storage vessel

Evaporator

- DEP-EVAP-00001 Evaporator

3.2.1 West Process Area Sumps DEP-SUMP-00002A/B

The west process area sumps (DEP-SUMP-00002A/B) are located within room E-0103, designated R4/C5 at elevation 0 ft. The west process area sumps and level detection instruments detect a leak from the evaporator (DEP-EVAP-00001), the evaporator reboiler (DEP-RBLR-00001), the evaporator feed vessel prefilter (DEP-FILT-00003), the LAW effluent cooler heat exchanger (DEP-HX-00001), or ancillary equipment associated with the evaporator and heat exchanger.

The sumps are equipped with pumps which will transfer the fluid to the appropriate vessel. Fluid contained in the west process area sumps are transferred to the overhead sampling vessels (DEP-VSL-00004A/B) or the low point drain vessel (DEP-VSL-00001) by sump pumps (DEP-PMP-00032A/32B).

The liquid level in the sump is monitored by a level element (LE-8626/8629) and a level transmitter (LT-8626/8629). The transmitters communicate with the PCJ and provide a control room indication (LI-8626/8629) and alarm on high and high-high-high level. A high-level alarm will trip upon detection of liquid in the sump. The PCJ system will alert the operator.

Sump level instrumentation has three alarm points. The first alarm, high level, assumes that the sump starts out completely dry. It alerts the operator at or before the level in the sump reaches 2.4 gallons based on a leak of 0.1 gallons per hour within 24 hours, as provided in permit condition III.10.E.9.e.ii. Once the alarm is received, the sump liquids are transferred by the operator from the sump to the appropriate downstream vessel.

The second alarm point, high LKY level rate of change function, will calculate any change in fluid level above the first alarm setpoint. The LKY control function shown in Figure 2 detects a change in sump liquid levels. The third alarm, high-high-high level, will alert the operator that the sump has reached its maximum volume.

The operator will investigate the source of the alarm and will transfer any effluent from the sump. The transfer will end when the level in the sump reaches its low-level functional logic control point, a batch is transferred, or the selected target collection vessel (DEP-VSL-00001) reaches its actual high-level batch control point.

In the event of any sump level detection alarm, the source of the spill will be identified and isolated; notifications, spill response, and waste removal will be completed in accordance with WTP Operating and Spill Response procedures.

3.2.2 East Process Area Sumps DEP-SUMP-00003A/B

The east process area sumps (DEP-SUMP-00003A/B) are located within room E-0102, designated R3/C3 at elevation 0 ft. The east process area sumps and level detection instruments detect a leak from the evaporator condensers (DEP-COND-00001/2/3) or the ancillary equipment associated with the evaporator condensers.

The sumps are equipped with pumps which will transfer the fluid to the appropriate vessel. Fluid contained in the east process area sumps are transferred to the process condensate lag storage vessels (DEP-VSL-00005A/B) by sump pumps (DEP-PMP-00033A/33B).

The levels in the sumps are measured by a level transmitter (LT-8646/8647). The transmitters communicate with the PCJ and provide a control room indication (LI-8646/8647) and alarm on high and high-high-high level. A high-level alarm will trip upon detection of liquid in the sump. The PCJ system will alert the operator.

Sump level instrumentation has three alarm points. The first alarm, high level, assumes that the sump starts out completely dry. It alerts the operator at or before the level in the sump reaches 2.4 gallons based on a leak of 0.1 gallons per hour within 24 hours, as provided in permit condition III.10.E.9.e.ii. Once the alarm is received, the sump liquids are transferred by the operator from the sump to the appropriate downstream vessel.

The second alarm point, high LKY level rate of change function, will calculate any change in fluid level above the first alarm setpoint. The LKY control function shown in Figure 2 detects a change in sump liquid levels. The third alarm, high-high-high level, will alert the operator that the sump has reached its maximum volume.

The operator will investigate the source of the alarm and will transfer any effluent from the sump. The transfer will end when the level in the sump reaches its low-level functional logic control point, a batch is transferred, or the selected target collection vessel (DEP-VSL-00001) reaches its actual high-level batch control point.

In the event of any sump level detection alarm, the source of the spill will be identified and isolated; notifications, spill response, and waste removal will be completed in accordance with WTP Operating and Spill Response procedures.

3.2.3 Evaporator Concentrate Area Sumps DEP-SUMP-00004A/B

The evaporator concentrate area sumps (DEP-SUMP-00004A/B) are located within room E-0105, designated R4/R3/C1 at elevation 0 ft. The evaporator concentrate area sumps and level detection instruments detect an overflow or a leak from the evaporator feed vessel (DEP-VSL-00002), the evaporator concentrate vessels (DEP-VSL-00003A/B/C), and a leak from ancillary equipment located within this stainless steel lined room E-0105.

The sumps are equipped with pumps which will transfer the fluid to the appropriate vessel. Fluid contained in the evaporator concentrate area sumps are transferred to the overhead sampling vessels (DEP-VSL-00004A/B) or the low point drain vessel (DEP-VSL-00001) by sump pumps (DEP-PMP-00034A/34B).

The liquid level in the sump is monitored by a level element (LE-8632/8656) and a level transmitter (LT-8632/8656). The transmitters communicate with the PCJ and provide a control room indication (LI-8626/8629) and alarm on high and high-high-high level. A high-level alarm will trip upon detection of liquid in the sump. The PCJ system will alert the operator.

Sump level instrumentation has three alarm points. The first alarm, high level, assumes that the sump starts out completely dry. It alerts the operator at or before the level in the sump reaches 2.4 gallons based on a leak of 0.1 gallons per hour within 24 hours, as provided in permit condition III.10.E.9.e.ii. Once the alarm is received, the sump liquids are transferred by the operator from the sump to the appropriate downstream vessel.

The second alarm point, high LKY level rate of change function, will calculate any change in fluid level above the first alarm setpoint. The LKY control function shown in Figure 2 detects a change in sump liquid levels. The third alarm, high-high-high level, will alert the operator that the sump has reached its maximum volume.

The operator will investigate the source of the alarm and will transfer any effluent from the sump. The transfer will end when the level in the sump reaches its low-level functional logic control point, a batch is transferred, or the selected target collection vessel (DEP-VSL-00001) reaches its actual high-level batch control point.

In the event of any sump level detection alarm, the source of the spill will be identified and isolated; notifications, spill response, and waste removal will be completed in accordance with WTP Operating and Spill Response procedures.

3.2.4 Process Condensate Area Sumps DEP-SUMP-00005A/B

The process condensate area sumps (DEP-SUMP-00005A/B) are located within room E-0106, designated R2/C1 at elevation 0 ft. The process condensate area sumps and level detection instruments detect an overflow or a leak from the overhead sampling vessels (DEP-VSL-00004A/B) or the process condensate lag storage vessels (DEP-VSL-00005A/B).

The sumps are equipped with pumps which will transfer the fluid to the appropriate vessel. Fluid contained in the process condensate area sumps are transferred to the process condensate lag storage vessels (DEP-VSL-00005A/B) by sump pumps (DEP-PMP-00035A/35B). Prior to emptying the process condensate area sumps, the operator will need to verify that the chosen vessel has not ruptured as a ruptured vessel could be the source of the sump fluid.

The levels in the sumps are monitored by a level transmitter (LT-8638/8641). The transmitters communicate with the PCJ and provide a control room indication (LI-8638/8641) and alarm on high and high-high-high level. A high-level alarm will trip upon detection of liquid in the sump. The PCJ system will alert the operator.

Sump level instrumentation has three alarm points. The first alarm, high level, assumes that the sump starts out completely dry. It alerts the operator at or before the level in the sump reaches 2.4 gallons based on a leak of 0.1 gallons per hour within 24 hours, as provided in permit condition III.10.E.9.e.ii. Once the alarm is received, the sump liquids are transferred by the operator from the sump to the appropriate downstream vessel.

The second alarm point, high LKY level rate of change function, will calculate any change in fluid level above the first alarm setpoint. The LKY control function shown in Figure 2 detects a change in sump liquid levels. The third alarm, high-high-high level, will alert the operator that the sump has reached its maximum volume.

The operator will investigate the source of the alarm and will transfer any effluent from the sump. The transfer will end when the level in the sump reaches its low-level functional logic control point, a batch is transferred, or the selected target collection vessel (DEP-VSL-00001) reaches its actual high-level batch control point.

In the event of any sump level detection alarm, the source of the spill will be identified and isolated; notifications, spill response, and waste removal will be completed in accordance with WTP Operating and Spill Response procedures.

3.2.5 EMF Process Vessels

The narrative for the eight vessels listed in Section 3.2 will be included in a future revision of this document.

3.2.6 Evaporator

The narrative for the evaporator listed in Section 3.2 will be included in a future revision of this document.

Table 2 below lists auxiliary equipment associated with low point drain vessel and aforementioned sumps.

Table 2 Associated Instruments for DEP Low Point Drain Vessel and Sumps

P&ID	Monitoring/Control Parameter	Type of Instrument/Control Device	Instrument/Control Device Tag Number
24590-BOF-M6-DEP-00001002	Level measurement for DEP-VSL-00001	Level Element	DEP-LE-8109
		Level Transmitter	DEP-LT-8109
		Level Indicator	DEP-LI-8109
		Level Alarm (High, High-High, Low, and Low-Low)	DEP-LI-8109A
24590-BOF-M6-DEP-00001002	Level measurement for DEP-SUMP-00001	Level Element	DEP-LE-8112
		Level Transmitter	DEP-LT-8112
		Level Indicator	DEP-LI-8112
		Level Alarm (High and High-High-High)	DEP-LI-8112A
		Level High-High Switch	DEP-LSHH-8112
		Leak Rate	DEP-LKY-8112A
24590-BOF-M6-DEP-00009001	Level measurement for DEP-SUMP-00002A	Level Element	DEP-LE-8626
		Level Transmitter	DEP-LT-8626
		Level Indicator	DEP-LI-8626
		Level Alarm (High and High-High-High)	DEP-LI-8626A
		Leak Rate	DEP-LKY-8626A
24590-BOF-M6-DEP-00009001	Level measurement for DEP-SUMP-00002B	Level Element	DEP-LE-8629
		Level Transmitter	DEP-LT-8629
		Level Indicator	DEP-LI-8629
		Level Alarm (High and High-High-High)	DEP-LI-8629A
		Leak Rate	DEP-LKY-8629A
24590-BOF-M6-DEP-00009002	Level measurement for DEP-SUMP-00004A	Level Element	DEP-LE-8632
		Level Transmitter	DEP-LT-8632
		Level Indicator	DEP-LI-8632
		Level Alarm (High and High-High-High)	DEP-LI-8632A
		Leak Rate	DEP-LKY-8632A
24590-BOF-M6-DEP-00009002	Level measurement for DEP-SUMP-00004B	Level Element	DEP-LE-8656
		Level Transmitter	DEP-LT-8656
		Level Indicator	DEP-LI-8656
		Level Alarm (High and High-High-High)	DEP-LI-8656A
		Leak Rate	DEP-LKY-8656A

P&ID	Monitoring/Control Parameter	Type of Instrument/Control Device	Instrument/Control Device Tag Number
24590-BOF-M6-DEP-00009004	Level measurement for DEP-SUMP-00003A	Level Transmitter	DEP-LT-8646
		Level Indicator	DEP-LI-8646
		Level Alarm (High and High-High-High)	DEP-LI-8646A
		Leak Rate	DEP-LKY-8646A
24590-BOF-M6-DEP-00009004	Level measurement for DEP-SUMP-00003B	Level Transmitter	DEP-LT-8647
		Level Indicator	DEP-LI-8647
		Level Alarm (High and High-High-High)	DEP-LI-8647A
		Leak Rate	DEP-LKY-8647A
24590-BOF-M6-DEP-00009005	Level measurement for DEP-SUMP-00005A	Level Transmitter	DEP-LT-8638
		Level Indicator	DEP-LI-8638
		Level Alarm (High and High-High-High)	DEP-LI-8638A
		Leak Rate	DEP-LKY-8638A
24590-BOF-M6-DEP-00009005	Level measurement for DEP-SUMP-00005B	Level Transmitter	DEP-LT-8641
		Level Indicator	DEP-LI-8641
		Level Alarm (High and High-High-High)	DEP-LI-8641A
		Leak Rate	DEP-LKY-8641A
24590-BOF-M6-DEP-00011001	Level measurement for DEP-LDB-00001	Level High Switch	DEP-LSH-8701
		Level High Alarm	DEP-LAH-8701
24590-BOF-M6-DEP-00011001	Level measurement for DEP-LDB-00002	Level High Switch	DEP-LSH-8702
		Level High Alarm	DEP-LAH-8702
24590-BOF-M6-DEP-00011001	Level measurement for DEP-LDB-00003	Level High Switch	DEP-LSH-8703
		Level High Alarm	DEP-LAH-8703
24590-BOF-M6-DEP-00011001	Level measurement for DEP-LDB-00004	Level High Switch	DEP-LSH-8706
		Level High Alarm	DEP-LAH-8706
24590-BOF-M6-DEP-00011001	Level measurement for DEP-LDB-00005	Level High Switch	DEP-LSH-8705
		Level High Alarm	DEP-LAH-8705
24590-BOF-M6-DEP-00011001	Level measurement for DEP-LDB-00006	Level High Switch	DEP-LSH-8704
		Level High Alarm	DEP-LAH-8704

Figure 1 Typical Collection Vessel Level Detection

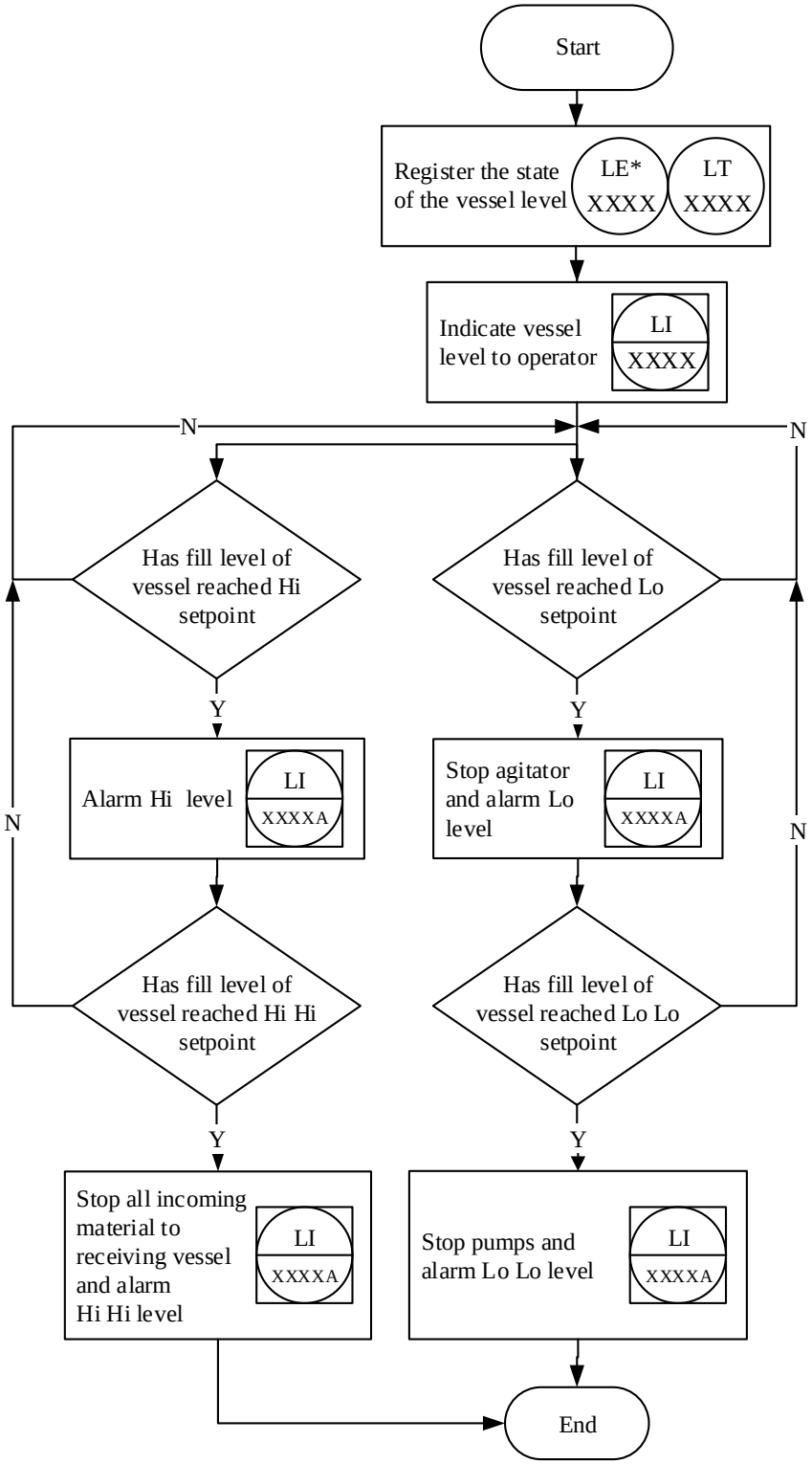

*Level measurement for some vessels will not utilize a Level Element (LE).

Figure 2 Typical Sump Level Detection

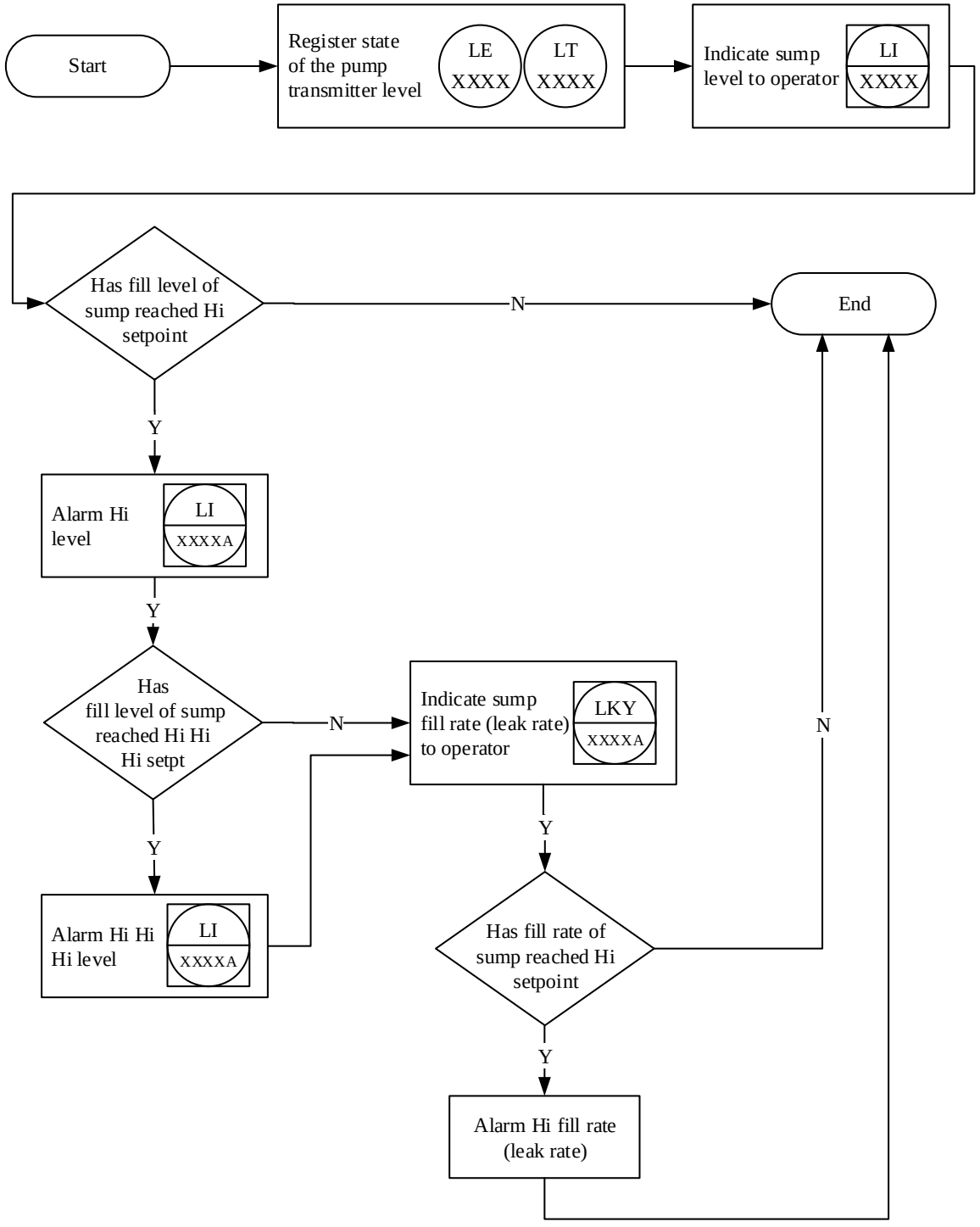

Note: DEP-SUMP-00001 level detection includes additional functional Hi Hi setpoint to close demin water line.

Figure 3 Typical Leak Detection Box Level Detection

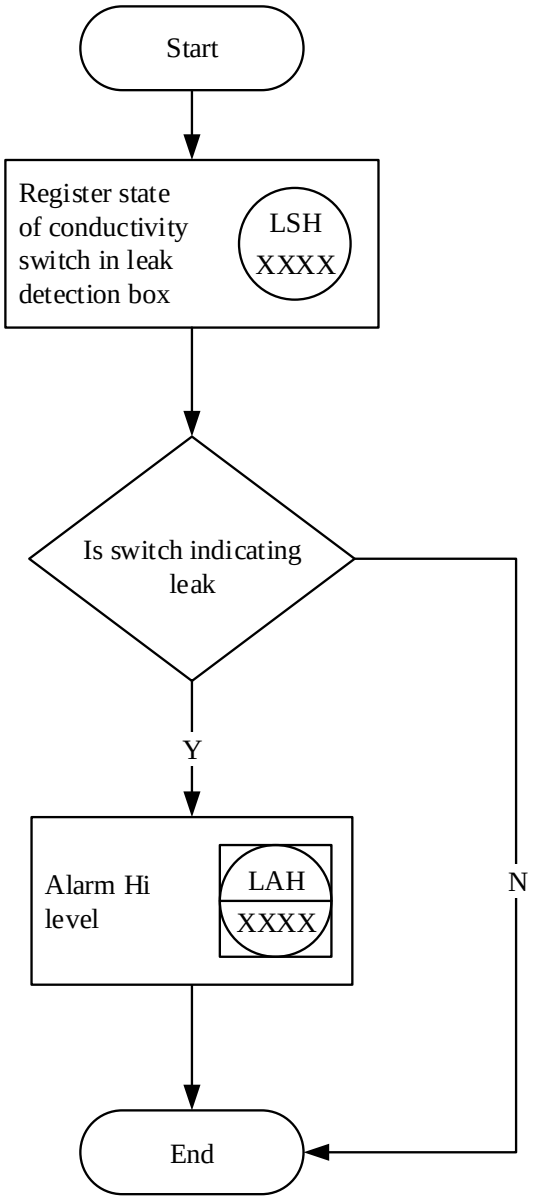

Issued by
RPP-WTP PDC

Leak Detection Capability in the EMF Facility

Document title:

Document number: 24590-BOF-PER-M-16-001, Rev 0

Contract number: DE-AC27-01RV14136

Department: Mechanical Systems

Author(s): Kyle Cantrell

Checked by: Sang Ip

Issue status: Issued for Permitting Use

Note: Contents of this document are Dangerous Waste Permit affecting.

Approved by: Y. Mohammad-Zadeh

Approver's position: Engineering Group Supervisor

Approver's signature: _____ for YM _____ 10/24/16

Signature *Date*

River Protection Project
Waste Treatment Plant
2435 Stevens Center Place
Richland, WA 99354
United States of America
Tel: 509 371 2000

Notice

Please note that source, special nuclear, and byproduct materials, as defined in the Atomic Energy Act of 1954 (AEA), are regulated at the US Department of Energy (DOE) facilities exclusively by DOE acting pursuant to its AEA authority. DOE asserts, that pursuant to the AEA, it has sole and exclusive responsibility and authority to regulate source, special nuclear, and byproduct materials at DOE-owned nuclear facilities. Information contained herein on radionuclides is provided for process description purposes only.

History Sheet

Rev	Reason for revision	Revised by
0	Issued for Permitting Use	K. Cantrell

Contents

Notice ii
History Sheet ii
Acronyms iv
1 Summary 1
2 Objective 1
3 Description 1
4 Inputs/Assumptions 2
5 Analysis 5
6 Detectable Leak Rates 5
7 References 14

Acronyms

AEA	Atomic Energy Act of 1954
BNI	Bechtel National, Incorporated
CCN	Correspondence Control Number
CGS	centimeter gram second units of measurement
DEP	Direct feed low activity waste effluent management facility process system
DOE	US Department of Energy
DWP	Dangerous Waste Permit
EMF	Effluent Management Facility
STD	Standard
WAC	Washington Administrative Code
WTP	River Protection Project-Waste Treatment Plant

1 Summary

The Effluent Management Facility (EMF) secondary containment system must satisfy the leak detection criteria of the Washington Administrative Code (WAC) 173-303-640(4) (Ref. 7.3) and the Waste Treatment Plant (WTP) Dangerous Waste Permit (DWP) 7890008967, Permit Condition III.10.E.9.e.ii for tank and miscellaneous treatment system secondary containment areas, Reference 7.4. This report evaluates the minimum leak rates that can be detected within 24 hours in the regulated secondary containment sumps.

The EMF facility contains nine DWP sumps. Leaks of vessels or piping within the vessels cells or rooms will flow along the floor (or in containment piping), and be collected in a sump provided with leak detection instrumentation. All sumps are considered dry type for the purpose of calculating the leak detection capability.

Since the DWP has established a minimum leak rate of 0.1 gallons per hour (gph), this report determines the time to detect the minimum leak of 0.1 gph in the sumps based on the time to fill the sump plus the time for the 0.1 gph leak to flow to the sump. The time to fill the sump is calculated by first determining the minimum detectable volume in each sump and then the time required to reach this detectable column at a leak rate of 0.1 gph. If the "time to detect" is less than 24 hours for a flow rate of 0.1 gph for all sumps, the permit condition is met.

This Permit Document will document that the time to fill the sump to the detectable level is the critical factor for establishing a leak detection rate vs. the time for the leak (rivulet) to cross the floor or for the leak to wet and travel through the pipe. This approach has been previously presented to the Department of Ecology.

2 Objective

The objective of this report is to document the capability to detect a 0.1 gph leak of dangerous waste within 24 hours in the EMF facility secondary containment area sumps. The leakages include:

- Leakage through double-wall (co-axial) piping
- Leakage on the floor

3 Description

The EMF facility regulated sumps must satisfy the leak detection criteria of the WAC and DWP conditions for secondary containment systems. The regulatory requirements for leak detection are contained in WAC-173-303-640(4), Tank Systems, Section 4, Containment and Detection of Releases (Reference 7.3) and are restated as follows:

> (b) Secondary Containment systems must be:
>
> (ii) Capable of detecting and collecting releases and accumulated liquids until the collected material is removed.
>
> (c) To meet the requirements of (b) of this subsection, secondary containment systems must be at a minimum:
>
> (iii) Provided with a leak detection system that is designed and operated so that it will detect the failure of either the primary or secondary containment structure or the presence of any

> release of dangerous waste or accumulated liquid in the secondary containment system within twenty-four hours, or at the earliest practicable time if the owner or operator can demonstrate to the department that the existing detection technologies or site conditions will not allow detection of a release within twenty-four hours.

In addition, the Waste Treatment Plant Dangerous Waste Permit (Reference. 7.4), Condition: III.10.E.9.e.ii requires submittal of:

Detailed plans and descriptions, demonstrating the leak detection system is operated so that it will detect the failure of either the primary or secondary containment structure or the presence of any release of dangerous and/or mixed waste, or accumulated liquid in the secondary containment system within twenty-four (24) hours. Detection of a leak of at least 0.1 gallons per hour within twenty-four (24) hours is defined as being able to detect a leak within twenty-four (24) hours. Any exceptions to this criteria must be approved by Ecology [WAC 173-303-640(4)(c)(iii), WAC 173-303-806(4)(c)(vii)].

4 Inputs/Assumptions

4.1 The sump locations in the rooms and the maximum total floor distances are summarized in the following Table 4.1. The distances are measured conservatively from the General Arrangement drawings (Reference 7.5 & 7.6) and have been rounded up. The maximum leak travel distance is conservatively computed by summing the distance along the walls from the furthest high point of the floor. Based on the estimate of travel distances for leaks in each cell, the longest leak flow distance on the floors to any sump is 73', see Table 4.1, for sumps SUMP-00003A/B.

Table 4.1: Sump Locations and Max Floor Distances

Room Number	Sump Name	DEP-Sump-000xx	Sump Location in Cell	Elev.	N-S Distance (rounded up)	E-W Distance (rounded up)	Max Total Distance, ft
ED-B001	Low Point Drain Vessel Area Sump	01	S Wall	-39'-0"	28'-0"	33'-0"	61
E-0103	West Process Area Sump	02A	N Wall	0'-0"	30'-0"	31'-0"	61
E-0103	West Process Area Sump	02B	S Wall	0'-0"	30'-0"	31'-0"	61
E-0102	East Process Area Sump	03A	N Wall	0'-0"	30'-0"	43'-0"	73
E-0102	East Process Area Sump	03B	S Wall	0'-0"	30'-0"	43'-0"	73
E-0105	Feed Vessel Area Sump	04A	N-W corner	0'-0"	44'-0"	20'-0"	64
E-0105	Feed Vessel Area Sump	04B	N-E corner	0'-0"	44'-0"	20'-0"	64
E-0106	Process Condensate Vessel Area Sump	05A	N Wall	0'-0"	25'-0"	43'-0"	68
E-0106	Process Condensate Vessel Area Sump	05B	S Wall	0'-0"	20'-0"	43'-0"	63

4.2 The sumps are 24 inch diameter cylindrical with a flat bottom (Reference 7.1, Section 8.3).

4.3 Secondary containment area floors with stainless steel liners or special protective coating are sloped at a minimum of 1% (1:100) to direct potential leakage to the sumps or sumps in each room (Reference 7.5, Note 2).

4.4 Waste are assumed to the physical properties of water at 100°F (Reference 7.8, p. 30.37), see Assumption 4.6.a. These properties are summarized Table 4.2 below:

Table 4.2: Physical Properties of Water

Constant	English Units	CGS Units
ρ, density	61.99 lbm/ft^3	0.993 gm/cm^3
μ, dynamic viscosity	1.648 lbm/ft hr	0.00681 gm/cm sec
γ, surface tension	0.0048 lbf/ft	69.96 dyn/cm or 69.96 gm/sec^2

4.5 The minimum detectable level within the EMF Secondary Containment System is assumed to be 0.5" above the bottom of each sump based on preliminary vendor information provided by C&I and a project specification for level measurement (Reference 7.11, Section 3.2.1).

4.6 The following items (a through f) were derived from agreements between BNI, DOE, and Department of Ecology (Reference 7.7):

a. The liquid leaking is water at a temperature of 100°F.
b. The leak is at a constant rate over the 24-hour period.
c. No evaporation will occur.
d. The liquid does not foam in the sumps.
e. Hold-up is defined as wetting of the surface.
f. Level detection instruments will be properly installed and calibrated upon installation. Periodic, normal maintenance and calibration will be performed on level instruments during operation of the facility and the instruments will be maintained in an operable condition.

4.7 Double-wall (co-axial) pipes run from room E-0103 to ED-0102 through a tunnel, which are the subject of pipe leakage in this report. The double-wall (co-axial) piping has a minimum slope of 1/100 (1%).

4.8 The wetting factor from experimental data was found to be 0.32 fl. oz/ft (Reference 7.9) for an NPS 6 pipe. The wetting factor will be increased by 50% to 0.48 fl. oz/ft to provide additional margin to the calculated holdup time.

4.9 The rivulet flow in this calculation will be based on the simplified model for a wide flat rivulet. Figure 5 of Ref. 7.10 shows dashed lines which are asymptotic solutions for wide-flat rivulets at high Ω values and for narrow rivulets at low Ω values. For a contact angle of 5°, Figure 5 shows that the wide flat rivulet model, represented by equations 26 and 27 of Ref. 7.10, is applicable when Ω is larger than 0.001 and P is larger than 5. This assumption will be verified by the evaluation of Ω and P using data from this calculation.

4.10 Reference 7.10, Table 2 shows for a rivulet flow rate of 6.2 ml/min (~0.1 gph), the corresponding contact angle, θ, is experimentally measured as 9 to 12 degrees. A conservative rivulet contact angle of 6 degrees is assumed for this calculation. The smaller contact angle results in a longer time to sump for a given flow path length from the following logic: a smaller contact angle yields a larger rivulet width, which yields a larger rivulet cross sectional area, which leads to a lower velocity (since the flow rate is fixed). This assumption is conservative.

4.11 The floor is uniformly sloped and the flow path is in straight lines (no meandering flow).

4.12 Double-wall (co-axial) pipes run from room E-0103 to ED-0102 through a tunnel. This horizontal distance is conservatively measured at 30 ft (Reference 7.5). Any potential leakage will travel in the outer pipe to the end and is routed verticality down through tubing to the Low Point Drain Vessel Area Sump (DEP-SUMP-00001). This vertical drop is conservatively measured and rounded up to 50 ft (Reference. 7.6).

4.13 The average velocity equation assigned to the leakage being conveyed within the sloped pipe is developed from boundary layer theory for flow down an inclined plane. This is simplifying assumption but is reasonable to make because the average velocity is applied to the entire length of the pipe route (e.g., from the double-wall pipe to the sump), even when it contains large vertical drops (where the velocity would increase, thereby reducing the travel time to leak detection equipment). This is a reasonable and simplifying assumption.

4.14 There are no obstructions in the flow path. Leaks from any equipment or piping fall directly to the floor at the point of leakage and do not travel along the outside of pipes or other equipment and

the rivulet does not split into multiple streams as it travels across the floor. While actual leaks may not conform to this scenario, it is beyond the objectives of this calculation to assess every possible leak scenario. The intent is to provide a calculated leak detection volume that is not overly complex but still maintains sufficient accuracy to demonstrate leak detection capability within a reasonable level of uncertainty.

4.15 The double-wall pipelines have pipe classes of W11A and W31A with sizes range from 1 ½" to 10" (Ref. 7.12 – 7.14, 7.2.1). The specifications for the encasement pipe of double-wall (co-axial) pipe class W31A and W11A are summarized in Table 4.3 below. The inside diameters (I.D.) are from Ref. 7.15, p. B-13 through B-16.

Table 4.3: Double-Wall (co-axial) Pipe Specification

Pipe Class	Carrier Size (inch)	Encasement Size (inch)	Material	Sch.	I.D. (inch)
W31A	2	4	CS A106 Gr. B	STD	4.026
W31A	3	6	CS A106 Gr. B	STD	6.065
W31A	10	12	CS A106 Gr. B	STD	12.000
W11A	1 1/2	4	316L SS	40S	4.026
W11A	3	6	316L SS	40S	6.065
W11A	4	6	316L SS	40S	6.065

4.16 The level instrument response time (i.e., the time between the process reaching a specified level set point and the instrument responding to the process condition) is considered negligible with regards to the leak detection time requirement. The level instrumentation is anticipated to have response times on the order of seconds therefore the response time is insignificant based on the 24 hr detection limit.

4.17 All sumps within the EMF Facility are conservatively assumed to be dry. This maximizes the time required to fill the sumps to a detectable level.

5 Analysis

In order to establish if the EMF leak detection system is capable of detecting a permit condition leakage rate of 0.1 gph within a 24-hour time period, the time to sump (t_1), the time to fill (t_2), and the time to wet (t_3) (if applicable) are determined. Because postulated leaks for the low point drain vessel sump convey along a short segment of double-wall (co-axial) pipes as well as the liner floor, two methods are used to determine the elapsed time to detect a leak in the low point drain sump. Leakage flowing inside double-wall (co-axial) pipes makes use of boundary layer theory (Section 6.1) and leakage flowing along the liner floor makes use of rivulet flow (Section 6.2).

6 Detectable Leak Rates

6.1 Leakage through pipes

The elapsed time to detect a leak that is flowing through a pipe is composed of three time components: (i.) liquid holdup time or elapsed time for leak to wet surface, t_3, (Section 6.1.1), (ii.) elapsed time for the leak to arrive at the detection equipment, t_1, (Section 6.1.2), and (iii.) the time to fill the leak detection equipment to a level that can be detected by the associated leak detection instrumentation, t_2, (Section

6.1.3). Therefore, the total time for leakage detection through pipes is $t_{total} = t_1 + t_2 + t_3$. If the total time is less than 24 hours for a flow rate of 0.1 gph for all leak detection equipment, the permit condition is met.

6.1.1 Holdup Time within Double-Wall (Co-Axial) Pipe, t_3

The elapsed time for the leak to wet the flow path (flow channel) from the most-remote location to its corresponding leak detection feature (i.e., a sump) is estimated based on an experimentally determined value of wetting holdup (Ref. 7.9) and results in the following equation for determining the time to account for the holdup of water flowing through a pipe :

$$t_3 = \frac{cL}{Q} \qquad \text{Equation 6.1}$$

Where:
t_3 = holdup time, hr
c = wetting factor, gal/ft or fluid ounces/ft (abbreviated as: fl. oz/ft) with use of conversion factor: 128 fl. oz/gal
L = travel distance, ft
Q = leakage volumetric flow rate, ga1/hr

The maximum distance from any postulated leak to the Low Point Drain Vessel Sump is obtained from Assumption 4.12. The linear length from the beginning of the double-wall pipes to the sump is used, this length conservatively includes any straight-vertical drops (Assumption 4.12), which is:

L = 30 ft + 50 ft = 80 ft

The wetting factor is equal to 0.32 fl. oz/ft for 6 inch pipes, however, a factor of 0.48 fl. oz/ft is used (Assumption 4.8) to add margin to the calculated holdup time. Hence, the time required to wet the flow channel using Equation 6.1 is:

L = 80 ft
Q = 0.1 gph

$$t_3 = \left(\frac{0.48\,fl.oz}{ft}\right)\left(\frac{gal}{128\,fl.oz.}\right)\left(\frac{80\,ft}{1}\right)\left(\frac{hr}{0.1gal}\right) = 3.0hr$$

6.1.2 Leak Travel Time to the Sump via Double-Wall (Co-Axial) Pipe, t_1

The time delay for the leak to reach or activate the detection equipment is calculated using equations derived from boundary layer theory for uniform flow down an inclined plane (Assumption 4.13). The average velocity distribution from boundary layer theory (Ref. 7.16, p. 249 thru 251, Equation 9.4b) is:

$$v = \frac{g \;\; S_p \;\; d_p^2}{3 \;\; n} \qquad \text{Equation 6.2}$$

where:
v = average leak velocity, ft/s
g = gravitation constant, 32.17 ft/s^2
S_p = Slope of the pipe, dimensionless
d_p = flow depth, ft
n = kinematic viscosity, ft^2/s

The general equation for volumetric flow rate is given by:

$$Q = Av \qquad \text{Equation 6.3}$$

where:
Q = volumetric flow rate, ft^3/s
A = cross-sectional flow area, ft^2

Therefore, combining Equation 6.2 and Equation 6.3, the flow depth, d_p, can be found by solving the following relationship:

$$d_p = \sqrt{\frac{3\ n\ Q}{g\ S_p\ A}} \qquad \text{Equation 6.4}$$

The geometry based cross-sectional area for gravity flow in a circular pipe is found from (Ref. 7.17, p. 5)

$$A = \frac{\left(\theta_{fs} - \sin\theta_{fs}\right)D_p^2}{8} \qquad \text{Equation 6.5}$$

where:
D_p = pipe diameter, ft
θ_{fs}= free surface angle (see Figure 1), radians

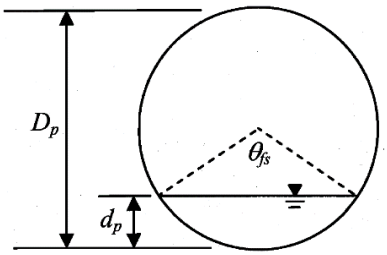

Figure 1. Partially Full Pipe Sketch

The depth of flow can be found by the following equation (Attachment A of Ref. 7.18)

$$d_p = D_p\ \sin^2\left(\frac{\theta_{fs}}{4}\right) \qquad \text{Equation 6.6}$$

There are four unknowns (θ_{fs}, A, v, and d_p) to the set of four equations represented by Equation 6.3 through Equation 6.6. Though it is difficult to split theta in these equations in order to use a solve-and-substitute method, iterations are used instead.

The time required for the leakage flow to travel from its point of origin to the sump is calculated from the Equations 6.3 through 6.6. The following constants are used:

D_p = ranges from 4.026 inch (0.3355 ft) to 12.000 inch (1.0 ft) (Table 4.3). The larger diameter of 1.0 ft is used in this calculation, since it yields a lower velocity, which is more conservative.
Q = 0.1 gph = 3.714 E-6 ft^3/s
g = 32.17 ft/s^2
S_p = Slope of the pipe = 1/100 = 0.01 (Assumption 4.7)

μ = 1.648 lbm/ft.hr (Table 4.2)
ρ = 61.99 lbm/ft^3 (Table 4.2)

Since kinematic viscosity (n) is equal to dynamic viscosity (μ) / density (ρ), kinematic viscosity is calculated as:

n = (1.648 lbm/ft.hr) / (61.99 lbm/ft^3) x (1 hr / 3600 sec) = 7.39E-6 ft^2/sec

A Mathcad equation solve block is used to determine the unknowns. The results are:

d_p = 1.674E-3 ft
A = 9.13E-5 ft^2
θ_{fs} = 0.164 Radians
v = 0.041 ft/s

The time delay for the leak to reach the sump is simply:

$$t_1 = L/v \times (hr/3600\,\text{sec}) \qquad \text{Equation 6.7}$$

where:
t_1 = time to reach detection equipment, hr
v = average velocity of leak, ft/sec
L = travel distance, ft

Equation 6.7 applies to rivulet flow as well.

Substituting the values in Equation 6.7, we have:

t_1 = (L/v) x (hr/3600s) = (80 ft / 0.041 ft/s) / 3600s = 0.6 hr

6.1.3 Time to Obtain a Detectable Sump Volume, t_2

The sumps are all round with flat bottoms (Assumption 4.2) and the detectable volume is calculated with:

$$\forall = \frac{\pi}{4} D_s^2 \times h \times \frac{gal}{231\ in^3} \qquad \text{Equation 6.8}$$

where:
D_s = sump diameter, in
h = detectable liquid height, in
$\forall$ = volume to detection, gal

Based on Assumption 4.2, the sumps have a 24" diameter. The sump detectable volume is determined from Equation 6.8 with the following values:

h = 0.5 in (Assumption 4.5)
D_s = 24 in (Assumption 4.2)

$\forall = \pi/4$ x (24 in)^2 x 0.5 in / 231 gal/in^3 = 0.98 gal

The time to fill the leak detection equipment, t_2, is calculated from the following equation:

$t_2 = \forall / Q$ Equation 6.9

where:
t_2 = time to fill the leak detection equipment, hr
$\forall$ = volume to detection, gallons
Q = leak rate, 0.1 gph

Substituting $\forall = 0.98$ gal and Q = 0.1 gph in Equation 6.9 we have:

t_2 = 0.98 gal/ 0.1 gal/hr= 9.8 hr

6.1.4 Total Detection Time, t_{total}

The total detection time is the sum of the previously enumerated pipe wetting, transport, and sump filling delays, which can be expressed in equation form as:

$t_{total} = t_1 + t_2 + t_3$

t_{total} = 0.6 hr + 9.8 hr + 3.0 hr = 13.4 hr

The resultant value is less than 24 hours for a minimum leak rate of 0.1 gph, thus satisfying the permit requirement for leakage detection.

6.2 Leakage Along Floor-Rivulet Flow

The time to detect a leak traveling across a floor liner is composed of two time components: t_1 and t_2. The first time component, t_1, is the time for the leak to reach the leak detection equipment (Equation 6.7). The secondary time component, t_2, is the time to fill the leak detection equipment based on the minimum leak rate.

For each leak detection equipment, " t_2 " is calculated by dividing the minimum detectable volume by the volumetric flow rate of the leak. The time component " t_1 " is calculated using the methodology from Reference 7.10 (rivulet flow). The elapsed time to detect a leak, t_{total} is the sum of these two time components: $t_{total} = t_1 + t_2$. If the total time is less than 24 hours for a flow rate of 0.1 gph for all leak detection equipment, the permit condition is met.

Calculation of " t_1" for each leak detection equipment is not necessary; using the longest path length bounds the "time to detection." As indicated in Assumption 4.1, the rivulet leak travel distance is computed by summing the distance along the walls: adding the north-south wall distance to the east-west wall distance.

6.2.1 Leakage Travel Time to Room Sumps, t_1

There is no need to calculate the flow rate of the leak across the floor since the permit has established a minimum leak rate of 0.1 gph. The approach illustrated here has been presented to and concurred by the Department of Ecology.

The "time to detection" is determined using the average leak velocity at the minimum leak rate of 0.1 gph. The methodology shown in Reference 7.10 for rivulet flow forms the basis for the rivulet leak velocity calculation. The method requires the calculation of the angle of inclination for the rivulet, the capillary constant, and the rivulet cross sectional area. In order to be consistent with the units in Ref. 7.10, most units within this section are presented in grams (gm) and centimeters (cm).

The angle of inclination, α, which is the slope of the floor with respect to a vertical plane, as shown in Figure 2, is determined using trigonometry as shown with the following equation:

$$\alpha = 90^{\circ} - \tan^{-1}(S_o) \qquad \text{Equation 6.10}$$

where:
α = angle of inclination, degrees
S_o = slope of floor, dimensionless

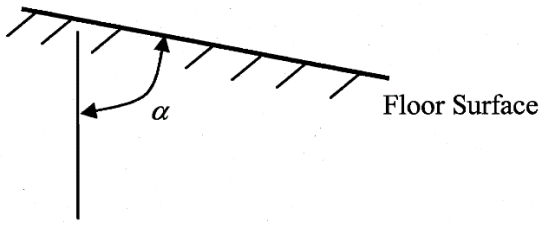

Figure 2. Inclination Angle for Rivulet Flow

From Assumption 4.3, S_o = 1/100 = 0.01. Substituting the values in the above Equation 6.10, we have:

α = 90° - $\tan^{-1}$(0.01) = 90° - 0.5729° = 89.427°

The capillary constant, the basis for the dimensionless width, is defined below (Ref. 7.10, p. 973, equation following equation 9):

$$a = \sqrt{\gamma / \rho g \sin\alpha} \qquad \text{Equation 6.11}$$

where:
a = capillary constant, cm
γ = liquid surface tension, dyne/cm (= gm/sec^2)
ρ = liquid density, gm/cm^3
g = gravitational acceleration = 980.7 cm/sec^2

The liquid properties are based on water at 100 °F (Assumption 4.4 & 4.6), which are listed in Table 4.2 and are as follows:

γ = 69.96 g/sec^2 (Assumption 4.4)
ρ = 0.993 g/cm^3 (Assumption 4.4)
α = 89.427°

Substituting these in Equation 6.11 above, we have:

$$a = \sqrt{\frac{69.96\ \ g/\sec^2}{0.993\ \ g/cm^3 \times 980.7\ \ cm/s^2 \times \sin(89.427^{\circ})}}$$

a = 0.268 cm

For the wide flat rivulet, its depth is determined based on (Ref. 7.10, 2nd equation following equation 25):

$$Y_0 = 2\sin\left(\theta/2\right)$$ Equation 6.12

where:
Y_0 = dimensionless depth and is defined in Reference 7.10, definitions following equation 17 (2nd line following equation 17), as:

$$Y_0 = \eta_0/a$$

where:
η_0 = rivulet depth, cm
θ = contact angle, degrees

Solving for η_0 yields:

$$\eta_0 = 2a\sin\left(\theta/2\right)$$ Equation 6.13

From Assumption 4.10 we have $\theta = 6°$. Substituting this in Equation 6.13 results in:

η_0 = 2 x 0.268 cm x sin (6°/2)
η_0 = 0.02805 cm

The rivulet width, l, is determined from Ref. 7.10, equation 27:

$$\frac{\mu Q \tan\alpha}{l\gamma}\sqrt{\frac{\rho g \sin\alpha}{\gamma}} = \frac{8}{3}\sin^3\left(\theta/2\right)$$

Rearrange above equation to solve for l:

$$l = \frac{3\mu Q \tan\alpha}{8\gamma \sin^3\left(\theta/2\right)}\sqrt{\frac{\rho g \sin\alpha}{\gamma}}$$ Equation 6.14

where:
l = rivulet width, cm
μ = dynamic liquid viscosity, gm/cm.sec
Q = volume flow, cm^3/sec

We can now calculate the width of the rivulet using Equation 6.14 below:

α = 89.427°
γ = 69.96 gm/sec^2 (Assumption 4.4)
μ = 0.00681 gm/cm.sec (Assumption 4.4)
ρ = 0.993 gm/cm^3 (Assumption 4.4)
g = 980.7 cm/sec^2
θ = 6° (Assumption 4.10)
Q = 0.1 gph = 0.1052 cm^3/sec

$$l = \frac{3 \times 0.00681 gm/cm.\sec \times 0.1052 cm^3/\sec \times \tan(89.427°)}{8 \times 69.96 gm/\sec^2 \times \sin^3(6°/2)} \sqrt{\frac{0.993 gm/cm^3 \times 980.7 cm/\sec^2 \times \sin(89.427°)}{69.96 gm/\sec^2}}$$

l = 9.99 cm

The rivulet cross-sectional area is determined using the approximation that the wide flat rivulet has a rectangular cross-section (rectangular cross-section for the wide flat rivulet is noted in Ref. 7.10, p. 975), thus the area is defined as:

$$A = l \cdot \eta_0 \qquad \text{Equation 6.15}$$

where:
A = rivulet area, cm^2

Substituting values in Equation 6.15 we have:

A = 9.99 cm x 0.02805 cm = 0.2802 cm^2

With the volumetric flow rate known, the rivulet velocity, v, can be calculated from rearranging Equation 6.3

$$v = Q / A \qquad \text{Equation 6.16}$$

Substituting values in Equation 6.16 we have:

v = 0.1052 cm^3/s / 0.2802 cm^2= 0.3754 cm/sec

The method used in this calculation is from Reference 7.10 and is based on a dimensionless flow rate, Ω, and dimensionless stream width, P, along with other parameters. The following equations for the dimensionless parameters, P and Ω, are used to calculate these values from Ref. 7.10, p. 974, equation following equation 17 and the 3rd equation following equation 17, respectively.

$$P = l / a \qquad \text{Equation 6.17}$$

where:
P = dimensionless width
l = rivulet width, cm
a = capillary constant, cm

The dimensionless rivulet width (P) is calculated using Equation 6.17 as follows:

P = 9.99 cm / 0.268 cm = 37.3

The Equation for Ω is defined in Ref. 7.10 as:

$$\Omega = \frac{\mu \rho g Q}{\gamma^2} \cdot \tan\alpha \cdot \sin\alpha \qquad \text{Equation 6.18}$$

where:
Ω = dimensionless flow rate

Q = volumetric flow rate, cm^3/sec
γ = liquid surface tension, dyne/cm (= gm/sec^2)
ρ = liquid density, gm/cm^3
g = gravitational acceleration = 980.7 cm/sec^2
α = angle of inclination (slope), degrees

The dimensionless flow rate (Ω) is calculated using Equation 6.18:

α = 89.427°
γ = 69.96 gm/sec^2 (Assumption 4.4)
μ = 0.00681 gm/cm.sec (Assumption 4.4)
ρ = 0.993 gm/cm^3 (Assumption 4.4)
g = 980.7 cm/sec^2
Q = 0.1 gph = 0.1052 cm^3/sec

$$\Omega = \frac{0.00681\ \ gm/cm.\sec \times 0.993\ \ gm/cm^3 \times 980.7\ \ cm/\sec^2 \times 0.1052\ \ cm^3/\sec}{69.96^2\ \ gm/\sec^2} \cdot \tan(89.427°) \cdot \sin(89.427°)$$

Ω = 0.014

From Reference 7.10 (p. 977, Figure 5), the point at the coordinates of Ω = 0.014 and P = 37.3 falls right on the asymptotic solutions for a wide rivulet close to θ = 5 degrees. This confirms the assumption for a wide rivulet flow (Assumption 4.9).

The time to flow to sump, t_1, is calculated for the sump with the longest rivulet travel distance, which is 73' (Assumption 4.1). Equation 6.7 is used to calculate the time to flow to sump, t_1:

$$t_1 = L/v \times (hr/3600\sec)$$

L = 73' = 2225 cm
v = 0.1052 cm^3/s / 0.2802 cm^2 = 0.3754 cm/sec

t_1 = (2225 cm / 0.3754 cm/s) x (1/3600)
t_1 = 1.65 hr

6.2.2 Time to Obtain a Detectable Sump Volume, t_2

The time to obtain a detectable vessel sump volume is calculated in Section 6.1.3 and is:

t_2 = 9.8 hr

6.2.3 Total Detection Time, t_{total}

The total detection time is the sum of the previously enumerated elapsed times t_1 and t_2:

$t_{total} = t_1 + t_2$ = 1.65 hr + 9.8 hr = 11.45 hr

6.3 Results

Table 6.1 below summarizes the result for the EMF's capability to detect a leakage. This analysis demonstrates that the EMF sumps are capable of detecting a permit condition leakage rate of 0.1 gal/hr within a 24-hour period, thus the permit condition for EMF is satisfied.

Table 6.1: EMF Time to Leak Detection Capability

Type of Leak	Time to Sump t_1 (hr)	Time to Fill t_2 (hr)	Time to Wet t_3 (hr)	Total Time to Detect t_{total} (hr)
Leakage thru double-wall (co-axial) piping	0.6	9.8	3.0	13.4
Leakage on the floor	1.65	9.8	*	11.45

*For leakage on the floor, Time to Wet (t_3) is included in the Time to Sump (t_1)

Table 6.1 above shows that using the bounding distance of 73 ft (maximum total floor distance to sump DEP-SUMP-00003A/B from Table 4.1) resulted in a bounding total detection time of 11.45 hours. Therefore, the total detection time for all other DWP sumps, which have a distance less than 73 ft, are less than 11.45 hours.

7 References

7.1 24590-BOF-M6C-DEP-00001, Rev. A, DEP Sump, Sump Pump and Pipeline sizing

7.2 P&IDs:

7.2.1 24590-BOF-M6-DEP-00001002, Rev. 0, Low Point Drain Vessel Pumps DEP-PMP-00001A/B

7.2.2 24590-BOF-M6-DEP-00009001, Rev. 0, Process Area Sumps, DEP-SUMP-00002A/B

7.2.3 24590-BOF-M6-DEP-00009004, Rev. 0, Process Area Sumps, DEP-SUMP-00003A/B

7.2.4 24590-BOF-M6-DEP-00009002, Rev. 0, Process Vessel Area Sumps, DEP-SUMP-00004A/B

7.2.5 24590-BOF-M6-DEP-00009005, Rev. 0, Process Vessel Area Sumps, DEP-SUMP-00005A/B

7.3 WAC 173-303-640. Tank Systems, Section 4, Containment and Detection of Releases in Dangerous Waste Regulations, Washington State Administrative Code.

7.4 WA 7890008967. Dangerous Waste Permit (DWP). Dangerous Waste Portion of the Resource Conservation and Recovery Act Permit for the Treatment, Storage, and Disposal of Dangerous Waste at the Hanford Waste Treatment and Immobilization Plant, Rev. 05/10, p 49.

7.5 Drawing 24590-BOF-P1-25 -00001, Rev. 0, Balance of Facilities LAW Effluent Process BLDG & LAW Effluent Drain Tank BLDG General Arrangement Plan at Elev. 0'-0"

7.6 Drawing 24590-BOF-P1-25-00002, Rev. 0, Balance of Facilities LAW Effluent Process BLDG & LAW Effluent Drain Tank BLDG General Arrangement Sections A, B, & C

7.7 CCN 097799, Leak Detection Capability Scoping Statement, Revision 6, 08/19/2004

7.8 2009 ASHRAE Handbook Fundamentals

7.9 CCN 093156, E-mail Message from Danielle Mathews to Roosevelt Molina, dated August 20,2004, Subject: Flour Daniel Northwest Calculation No. W314-P-039, Encasement Leak Detection, October 19, 1998

7.10 Towell, G. D, and Rothfeld, L. B. 1966, Hydrodynamics of Rivulet Flow, AIChE, Journal, Vol. 12, No. 5, p. 972-980

7.11 24590-WTP-3PS-JL10-T0002, Rev. 0, Engineering Specification For Radar Level Measurement

7.12 24590-BOF-M6-DEP-00001001, Rev. 0, P&ID - BOF/EMF Direct Feed LAW - EMF Process System – Low Point Drain Vessel - DEP-VSL-00001

7.13 24590-BOF-M6-DEP-00002006, Rev. 0, P&ID - BOF/EMF Direct Feel LAW EMF – Process System Evaporator Concentrate / Feed Vessels - LAW Effluent Cooler DEP-HX-00001

7.14 24590-BOF-M6-DEP-00010001, Rev. 0, P&ID - BOF/EMF Direct Feed LAW EMF Process System Underground Transfer Lines

7.15 Crane Co. 2011. Flow of Fluids through Valves, Fittings, and Pipe, Technical Paper No. 410, Stamford, CT

7.16 Roberson, John A. and Clayton T. Crowe, Engineering Fluid Mechanics, Houghton Mifflin Co., Boston, MA, 1975

7.17 24590-WTP-GPG-M-033, Rev. 4, Fire Water Drain System

7.18 24590-WTP-M6C-M11 T-00004, Rev. 1, Supporting Calculation for Fire Water Floor Drain System Design Guide

Issued by
RPP-WTP PDC

Dangerous Waste Permit (DWP) Liner Heights in the Effluent Management Facility (EMF)

Document title:

Document number: 24590-BOF-PER-M-16-003, Rev 0

Contract number: DE-AC27-01RV14136

Department: Mechanical Systems

Author(s): Elaine Tsai

Checked by: Bryant Leung

Issue status: Issued for Permitting Use

Approved by: Youssef Mohammad-Zadeh

Approver's position: Engineering Group Supervisor

Approver's signature: _____ *Signature*

10/24/16 *Date*

Contents of this document are Dangerous Waste Permit Affecting.

River Protection Project
Waste Treatment Plant
2435 Stevens Center Place
Richland, WA 99354
United States of America
Tel: 509 371 2000

This bound document contains a total of 29 sheets

Notice

Please note that source, special nuclear, and byproduct materials, as defined in the Atomic Energy Act of 1954 (AEA), are regulated at the US Department of Energy (DOE) facilities exclusively by DOE acting pursuant to its AEA authority. DOE asserts, that pursuant to the AEA, it has sole and exclusive responsibility and authority to regulate source, special nuclear, and byproduct materials at DOE-owned nuclear facilities. Information contained herein on radionuclides is provided for process description purposes only.

History Sheet

Rev	Reason for revision	Revised by
0	Issued for Permitting Use.	E. Tsai

Contents

Notice iii

History Sheet iv

Acronyms vi

1 Summary 1

2 Introduction 1

3 Applicable Documents 1

4 Description 2

Appendices

Appendix A Calculation of Accumulated Liquid Volumes and Liner Heights ..... A-i

Acronyms

AEA	Atomic Energy Act of 1954
DOE	Department of Energy
DWP	Dangerous Waste Permit
EMF	Effluent Management Facility
WAC	Washington Administrative Code

1 Summary

The required and design liner heights for each room in the EMF containing dangerous waste are listed below. The liner heights are from the high point of the sloped floor.

Area	Room	Required Height	Design Height
Low Point Drain Vessel Area	ED-B001	4 ft 2 inches	5 ft
Evaporator Feed Vessel Area	E-0105	5 ft 2 inches	7 ft 6 inches
Process Condensate Lag Storage Vessel Area	E-0106	6 ft 10 inches	8 ft 4 inches
West Evaporator Process Area	E-0103	3 ft 5 inches	4 ft 6 inches
East Evaporator Process Area	E-0102	4 ft 6 inches	5 ft 10 inches

The liner heights were calculated by taking the total accumulated liquid volume, including the total volume of a single largest vessel in the room and rainfall or fire water, as applicable, dividing that by the net room area and adding a foot to account for the volume of miscellaneous equipment and components that may be within the containment area. For each area, it was determined whether a leak from another area could spill into the specified area. If a potential for leaking from another area existed, the most bounding scenario was used to determine the liner height.

Design heights were taken from the Architectural Room Finish Schedule (Ref. A-6.5).

2 Introduction

The regulatory codes for the secondary containment areas are contained in the Washington Administrative Code, WAC 173-303-640(4)(e)(i). The regulatory requirement states that external liner systems must be:

> "(A) Designed or operated to contain one hundred percent capacity of the largest tank within its boundary;
> (B) Designed or operated to prevent run-on or infiltration of precipitation into the secondary containment system unless the collection system has sufficient excess capacity to contain run-on or infiltration. Such additional capacity must be sufficient to contain precipitation from a twenty-five year, twenty-four hour rainfall event…" [WAC 173-303-640(4)(e)(i)] (Applicable Documents 3.1)

The calculated liner heights for indoor areas must also be able to contain the volume from 20 minutes of fire suppression water as required by the Basis of Design (Ref. A-6.2) in addition to the volume of the dangerous waste. This report assesses the liner heights required to contain dangerous waste, rainfall, and fire water in the Effluent Management Facility (EMF).

3 Applicable Documents

3.1 Washington Administrative Code, December 18, 2014, Title 173 Chapter 303 Section 640

3.2 NFPA 13, *Standard for Installation of Sprinkler Systems*, 1999

4 Description

There are five areas in the EMF that are considered dangerous waste permit affecting. The five areas are the Low Point Drain Vessel Area, Evaporator Feed Vessel Area, Process Condensate Lag Storage Vessel Area, West Evaporator Process Area, and East Evaporator Process Area. Vessel and pump suction line failures are evaluated for each area to determine the required liner height that will contain the total accumulated liquid volume of dangerous waste and rainfall or fire water, as applicable.

For indoor areas, it is assumed (Assumption A-3.5 and A-3.11) that the area will contain automatic sprinklers and there will be no accumulation from precipitation. Therefore, the liner must be sized to contain:

- The larger of 110% of volume up to the overflow line of the largest vessel (i.e. maximum operating volume), used as a conservative criteria per Basis of Design requirement 11.3.5.1 (Ref. A-6.2), or 100% of the capacity of the largest vessel/tank within the secondary containment boundary per WAC 173-303-640[4][e][i][A] (Applicable Documents 3.1) and
- Accumulation of 20 minutes of fire water from automatic sprinkler discharge in accordance with Basis of Design requirement 14.10.1.2.1 (Ref. A-6.2) with 10% added overage to account for hydraulic overages (Assumption A-3.10)

For outdoor areas, it is assumed (Assumption A-3.5 and A-3.11) that the area will not contain automatic sprinklers and there will be accumulation from precipitation. Therefore, the liner must be sized to contain:

- The larger of 110% of volume up to the overflow of the largest vessel (i.e. maximum operating volume), used as a conservative criteria per Basis of Design requirement 11.3.5.1 (Ref. A-6.2), or 100% of the capacity of the largest vessel/tank within the secondary containment boundary per WAC 173-303-640[4][e][i][A] (Applicable Documents 3.1) and
- Precipitation from a twenty-five-year, twenty-four-hour rainfall event per WAC 173-303-640[4][e][i][B] (Applicable Documents 3.1)

4.1 Low Point Drain Vessel Area (ED-B001)

Room ED-B001, the Low Point Drain Vessel Area, is an area located below grade in the Law Effluent Drain Tank Building at the (-) 39 ft. elevation. It contains one vessel, the Low Point Drain Vessel (DEP-VSL-00001).

In the event of a vessel failure, leakage and spillage could occur. Since the room is indoors, it could also accumulate fire water from the automatic sprinkler system in the event of a fire.

The Low Point Drain Vessel Area is not adjacent to other areas containing pumps and vessels; therefore, spillage and leakage from another areas is not of concern and a scenario assuming discharge of the total volume of liquid contained in the Low Point Drain Vessel (DEP-VSL-00001) and 20 minutes of fire water is evaluated as the most conservative scenario.

The total Low Point Drain Vessel volume of 18,000 gal (2,406 ft^3) is greater than 110% of the maximum operating volume (15,180 gal); therefore, 18,000 gal (2,406 ft^3) is used as the controlling vessel volume in this scenario. 462 ft^3 of fire water (20 minutes of sprinkler discharge with a 10% margin for overage) is added to the total vessel volume to determine the total accumulated liquid volume. The total accumulated liquid volume that must be contained by the liner in the room = 2,406 ft^3 + 462 ft^3 = 2,868 ft^3.

The room slopes to a single sump (DEP-SUMP-00001). To simplify the calculation, the available room volume below the high point of the sloped floor is omitted. This approach is conservative because assuming the floor to be flat and neglecting the sloped area leads to a taller liner height.

The liner height is measured from the high point of the sloped floor. The required liner height above the high point is equal to the total volume of 2,868 ft^3 divided by the net room area (924 ft^2) of the room, which is the cross-sectional area of the room minus the footprints of non-failed vessels within the room, plus 1 ft to account for miscellaneous equipment and components within the area, which is equal to 4.10 ft = 4 ft 2 in (rounded to the next inch).

The design liner height is 5 ft (Ref. A-6.5), therefore the liner is sufficient for the scenario. The detailed calculation for the required liner height is provided in Appendix A.

4.2 Evaporator Feed Vessel Area (Room E-0105)

Room E-0105, Evaporator Feed Vessel Area, is an area located in the northwest side of EMF at the 0 ft. elevation. It contains the following four vessels:

- Evaporator Feed Vessel DEP-VSL-00002
- Evaporator Concentrate Vessel DEP-VSL-00003A
- Evaporator Concentrate Vessel DEP-VSL-00003B
- Evaporator Concentrate Vessel DEP-VSL-00003C

In the event of a vessel failure, leakage and spillage could occur. Since the room is outdoors, it could also accumulate rainfall.

The wall shared between the Evaporator Feed Vessel Area and the Process Condensate Lag Storage Vessel Area does not contain any penetrations; therefore, there is no potential for accumulated liquid in the Process Condensate Lag Storage Vessel Area to leak into the Evaporator Feed Vessel Area. The penetrations into the building are welded; therefore, no accumulated liquid from within the building will have the potential of leaking outdoors. To calculate the required height of the liner in this area, a scenario assuming discharge of the total volume of liquid from the single largest vessel in the room, the Evaporator Feed Vessel (DEP-VSL-00002), and accumulation of rainfall is evaluated as the most conservative scenario.

The total Evaporator Feed Vessel volume of 42,300 gal (5,655 ft^3) is greater than 110% of the maximum operating volume (41,800 gal); therefore, 42,300 gal (5,655 ft^3) is used as the controlling volume. 1.56 inches of rainfall, which equates to 231 ft^3 of rainfall for the cross-sectional area (1,774 ft^2) of the room is added to the vessel volume to determine the total accumulated liquid volume. The total accumulated liquid volume that must be contained by the liner in the room = 5,655 ft^3 + 231 ft^3 = 5,886 ft^3.

The room slopes down to two sumps (DEP-SUMP-00004A/B). To simplify the calculation, the available room volume below the high point of the sloped floor is omitted. This approach is conservative because assuming the floor to be flat and neglecting the sloped area leads to a taller liner height.

The liner height is measured from the high point of the sloped floor. The required liner height above the high point is equal to the total volume of 5,886 ft^3 divided by the net room area (1,430 ft^2) of the room, which is the cross-sectional area of the room minus the footprints of non-failed vessels within the room,

plus 1 ft to account for miscellaneous equipment and components within the area, which is equal to 5.12 ft = 5 ft 2 in (rounded to the next inch).

The design liner height is 7 ft 6 in (Ref. A-6.5), therefore the liner is sufficient for the scenario. The detailed calculation for the required liner height is provided in Appendix A.

4.3 Process Condensate Lag Storage Vessel Area (E-0106)

Room E-0106, Process Condensate Lag Storage Area, is an area located in the north side of EMF at the 0 ft. elevation. It contains the following four vessels:

- Overhead Sampling Vessel DEP-VSL-00004A
- Overhead Sampling Vessel DEP-VSL-00004B
- Process Condensate Lag Storage Vessel DEP-VSL-00005A
- Process Condensate Lag Storage Vessel DEP-VSL-00005B

In the event of a vessel failure, leakage and spillage could occur. Since the room is outdoors, it could also accumulate rainfall.

The wall shared between the Process Condensate Lag Storage Vessel Area and the Evaporator Feed Vessel Area does not contain any penetrations; therefore, there is no potential for accumulated liquid in the Evaporator Feed Vessel Area to leak into the Process Condensate Lag Storage Vessel Area. The penetrations into the building are welded; therefore, no accumulated liquid from within the building will have the potential of leaking outdoors. To calculate the required height of the liner in this area, a scenario assuming discharge of the total volume of liquid from the single largest vessel in the room, one of the Process Condensate Lag Storage Vessels (DEP-VSL-00005A or DEP-VSL-00005B), and accumulation of rainfall is evaluated as the most conservative scenario.

The total Process Condensate Lag Storage Vessel volume of 127,260 gal (17,012 ft^3) is greater than 110% of the maximum operating volume (122,937 gal); therefore, 127,260 gal (17,012 ft^3) is the controlling volume. 1.56 inches of rainfall, which equates to 499 ft^3 of rainfall for the cross-sectional floor area (3,837 ft^2) of the room is added to the vessel volume to determine the total accumulated liquid volume. The total accumulated liquid volume that must be contained by the liner in the room = 17,012 ft^3 + 499 ft^3 = 17,511 ft^3.

The room slopes down to two sumps (DEP-SUMP-00005A/B). To simplify the calculation, the available room volume below the high point of the sloped floor is omitted. This approach is conservative because assuming the floor to be flat and neglecting the sloped area leads to a taller liner height.

The liner height is measured from the high point of the sloped floor. The required liner height above the high point is equal to the total volume of 17,511 ft^3 divided by the net room area (3,031 ft^2) of the room, which is the cross-sectional area of the room minus the footprints of non-failed vessels within the room, plus 1 ft to account for miscellaneous equipment and components within the area, which is equal to 6.77 ft = 6 ft 10 in (rounded to the next inch).

The design liner height is 8 ft 4 in (Ref. A-6.5), therefore the liner is sufficient for the scenario. The detailed calculation for the required liner height is provided in Appendix A.

4.4 West (E-0103) and East (E-0102) Evaporator Process Areas

Room E-0103, West Evaporator Process Area, is an area located in the southwest side of EMF at 0 ft. elevation. The room contains the discharge pumps (DEP-PMP-00002A/B and DEP-PMP-00012A/B/C) from the Evaporator Feed Vessel (DEP-VSL-00002) and discharge pumps (DEP-PMP-00003A/B) from the Evaporator Concentrate Vessels (DEP-VSL-00003A/B/C). The room also contains miscellaneous vessels such as the Evaporator Separator (DEP-EVAP-00001), the Evaporator Reboiler (DEP-RBLR-00001), and the Evaporator Concentrate/Feed LAW Effluent Cooler (DEP-HX-00001).

Room E-0102, East Evaporator Process Area, is an area located in the southeast side of EMF at 0 ft. elevation. The room contains the discharge pumps (DEP-PMP-00004A/B/C) of the Overhead Sampling Vessels (DEP-VSL-00004A/B) and discharge pumps (DEP-PMP-000015A/B/C and DEP-PMP-00005A/B) of the Process Condensate Lag Storage Vessels (DEP-VSL-00005A/B). The room also contains miscellaneous vessels such as the three Evaporator Condensers (DEP-COND-00001/2/3), Reboiler Condensate Collection Vessel (DEP-VSL-00008), and the Steam Condensate Water Blowdown Vessel (SCW-VSL-00054).

In the event that a pump suction line fails, the entire volume of the connected vessel could discharge into the room. Since the rooms are indoor, they could also accumulate fire water from the automatic sprinkler system. The door between the two process areas cannot be credited as a seal; therefore, accumulated liquid in one area can leak into the other. In order to determine the appropriate liner height, two scenarios for each area are considered.

4.4.1 Scenario One for West Evaporator Process Area (E-0103)

The first scenario to be evaluated for the West Evaporator Process Area is the ability to contain the total volume of the single largest vessel connected to the pumps housed in the area and accumulation of fire water. Since the West Evaporator Process Area houses the discharge pumps for the Evaporator Feed and Evaporator Concentrate Vessels, the single largest vessel connected to the pumps in the area is the Evaporator Feed Vessel (DEP-VSL-00002).

Per Section 4.2, the controlling volume for the Evaporator Feed Vessel is 42,300 gal (5,655 ft^3). 1,751 ft^3 of fire water (20 minutes of sprinkler discharge with a 10% margin for overage) is added to the vessel volume to determine the total accumulated liquid volume. The total accumulated liquid volume that must be contained by the liner in the room = 5,655 ft^3 + 1,751 ft^3 = 7,406 ft^3.

The room slopes down to two sumps (DEP-SUMP-00002A/B). To simplify the calculation, the available room volume below the high point of the sloped floor is omitted. This approach is conservative because assuming the floor to be flat and neglecting the sloped area leads to a taller liner height.

The liner height is measured from the high point of the sloped floor. The required liner height above the high point is equal to the total volume of 7,406 ft^3 divided by the net room area (3,393 ft^2) of the room, which is the cross-sectional area of the room minus the footprints of non-failed vessels within the room, plus 1 ft to account for miscellaneous equipment and components within the area, which is equal to 3.18 ft = 3 ft 3 in (rounded to the next inch).

The design liner height is 4 ft 6 in (Ref. A-6.5), therefore the liner is sufficient for the scenario. The detailed calculation for the required liner height is provided in Appendix A.

4.4.2 Scenario One for East Evaporator Process Area (E-0102)

The first scenario to be evaluated for the East Evaporator Process Area is the ability to contain the total volume of the single largest vessel connected to the pumps housed in the area and accumulation of fire water. Since the East Evaporator Process Area houses the discharge pumps for the Overhead Sampling and Process Condensate Lag Storage Vessels, the single largest vessel connected to the pumps in the area is one of the Process Condensate Lag Storage Vessels (DEP-VSL-00005A/B).

Per Section 4.3, the controlling volume for the Process Condensate Lag Storage Vessel is 127,260 gal (17,012 ft^3). 2,929 ft^3 of fire water (20 minutes of sprinkler discharge with a 10% margin for overage) is added to the vessel volume to determine the total accumulated liquid volume. The total accumulated liquid volume that must be contained by the liner in the room = 17,012 ft^3 + 2,929 ft^3 = 19,941 ft^3.

The room slopes down to two sumps (DEP-SUMP-00003A/B). To simplify the calculation, the available room volume below the high point of the sloped floor is omitted. This approach is conservative because assuming the floor to be flat and neglecting the sloped area leads to a taller liner height.

The liner height is measured from the high point of the sloped floor. The required liner height above the high point is equal to the total volume of 19,941 ft^3 divided by the net room area (5,727 ft^2) of the room, which is the cross-sectional area of the room minus the footprints of non-failed vessels within the room, plus 1 ft to account for miscellaneous equipment and components within the area, which is equal to 4.48 ft = 4 ft 6 in (rounded to the next inch).

The design liner height is 5 ft 10 in (Ref. A-6.5), therefore the liner is sufficient for the scenario. The detailed calculation for the required liner height is provided in Appendix A.

4.4.3 Scenario Two for West and East Evaporator Process Areas

The second scenario to be evaluated for both Evaporator Process Areas is to consider the ability to contain the total normalized accumulated liquid in both areas. This scenario considers the pump suction line for the single largest vessel associated with pumps in either process area to fail, therefore, the total accumulated liquid would contain the total vessel volume of a single Process Condensate Lag Storage Vessel (DEP-VSL-00005A/B) and the accumulation of fire water across both areas.

Per Section 4.3, the controlling volume for Process Condensate Lag Storage Vessel is 127,260 gal (17,012 ft^3). 4,681 ft^3 of fire water (20 minutes of sprinkler discharge with a 10% margin for overage) is added to the vessel volume to determine the total accumulated liquid volume. The total accumulated liquid volume that must be contained by the liner in the West and East Evaporator Process Areas = 17,012 ft^3 + 4,681 ft^3 = 21,693 ft^3.

The liner height is measured from the high point of the sloped floor, which is conservative because neglecting the volume under the sloped area leads to a taller liner height. The required liner height above the high point is equal to the total volume of 21,693 ft^3 divided by the net room area (9,120 ft^2) of the room, which is the cross-sectional area of both process areas minus the footprints of non-failed vessels in both areas, plus 1 ft to account for miscellaneous equipment and components within the area, which is equal to 3.38 ft = 3 ft 5 in (rounded to the next inch). The detailed calculation for the required liner height is provided in Appendix A.

Based on evaluation of the two scenarios for both Evaporator Process Areas, the required liner height determined in scenario two (Section 4.4.3) is greater than the required liner height determined in scenario one (Section 4.4.1) for the West Evaporator Process Area, but smaller than the required liner height determined in scenario one (Section 4.4.2) for the East Evaporator Process Area. Therefore, 3 ft 5 inches will be the required liner height for the West Evaporator Process Area and 4 ft 6 inches will be the required liner height for the East Evaporator Process Area. The design liner height for West and East Evaporator Process Areas are 4 ft 6 inches and 5 ft 10 inches (Ref. A-6.5), respectively, therefore, the liner heights are sufficient.

Appendix A
Calculation of Accumulated Liquid Volumes and Liner Heights

Appendix A: Calculation of Accumulated Liquid Volumes and Required Liner Heights

A-1 Purpose

The purpose of this calculation is to size the required liner heights for the dangerous waste containment areas of the Effluent Management Facility at elevation -39 ft and elevation 0 ft. The Low Point Drain Vessel Area is at the -39 ft elevation and the Evaporator Feed Vessel Area, Process Condensate Lag Storage Vessel Area, West Evaporator Process Area, and East Evaporator Process Area are located at the 0 ft elevation as shown on the Effluent Management Facility General Arrangement Drawing (Ref. A-6.1).

A-2 Criteria and Design Inputs

A-2.1 Secondary containment for indoor storage areas shall be designed to contain a spill from the largest vessel plus the design flow volume of fire-protection water calculated to discharge from the fire-extinguishing system over the area of the room for a period of 20 minutes (Ref. A-6.2 Sec. 14.10.1.2.1).

A-2.2 Secondary containment external liners shall be designed to contain one hundred percent of the capacity of the largest tank within its boundary as well as precipitation from a twenty-five year, twenty-four hour rainfall event (Applicable Documents 3.1 WAC 173-303-640[4][e][i][A], WAC 173-303-640[4][e][i][B], and Ref. A-6.2 Sec. 14.10.1.2.1).

A-2.3 The twenty-five-year, twenty-four-hour rainfall event for the Hanford Site is 1.56 inches (Ref. A-6.4 Table 61).

A-2.4 The liners are designed to contain one hundred percent of the largest tank within its boundary, or one hundred ten percent of the volume up to the overflow (i.e., maximum operating volume) of the largest tank within its boundary (Applicable Documents 3.1 WAC 173-303-640[4][e][i][B] and Reference A-6.2 Section 11.3.5.1).

A-3 Assumptions

A-3.1 To evaluate the worst case scenario, the volume of the vessel is assumed to leak completely onto the floor until it reaches equilibrium with the surrounding liquid level.

A-3.2 The calculation for net room area assumes that the area beneath non-failed vessels or tanks do not contain any spilled liquids.

A-3.3 In a fire event, it is assumed that the fire water will remain in the containment area with no credit given to the operation of area sump pump(s).

A-3.4 Room dimensions used in calculating area and volumes are assumed to be the following:

Room	Area	Dimensions (Ref. A-6.3)		
		Length	Width	Area (ft^2)
ED-B001	Low Point Drain Vessel Area	28’	33’	924
E-0105	Evaporator Feed Vessel Area	45’6”	39’	1,774
E-0106	Process Condensate Lag Storage Vessel Area	45’6”	84’4”	3,837
E-0103	West Evaporator Process Area	62’	56’6”	3,503
E-0102	East Evaporator Process Area	62’	94’6”	5,859

A-3.5 All inside areas are assumed to have a fire sprinkler system. All outside areas are assumed not to have a fire sprinkler system.

A-3.6 The following vessels are contained within each listed room as shown on the general arrangement drawing (Ref. A-6.1) and assumed to have the diameters and volumes below (Ref. A-6.3):

Room	Vessel	Elevation	Vessel Diameter	Total Vessel Volume (gal)	Maximum Operating Volume (gal)
ED-B001	Low Point Drain Vessel (DEP-VSL-00001)	- 39 ft	14 ft 1 in	18,000	13,800
E-0105	Evaporator Feed Vessel (DEP-VSL-00002)	0 ft	14 ft 1 in	42,300	38,000
	Evaporator Concentrate Vessels (DEP-VSL-00003A/B/C)	0 ft	12 ft 1 in	14,805	11,703
E-0106	Overhead Sampling Vessels (DEP-VSL-00004A/B)	0 ft	14 ft 1in	40,800	36,600
	Process Condensate Lag Storage Vessels (DEP-VSL-00005A/B)	0 ft	25 ft 1 in	127,260	111,761

A-3.7 Miscellaneous vessels in the West and East Evaporator Process Areas are assumed to have the following dimensions and footprints (Ref. A-6.3):

Room	Equipment	Dimensions	Footprint
E-0103	DEP-EVAP-00001	10’ D x 23’ H	79 ft^2
E-0103	DEP-RBLR-00001	6’ L x 4’ W x 14’ H	24 ft^2
E-0103	DEP-HX-00001	2’6” L x 2’6” W 6’8” H	7 ft^2
E-0102	SCW-VSL-00054	4’ D x 9’ H	13 ft^2
E-0102	DEP-VSL-00008	4’ D x 3’ T-T	13 ft^2

E-0102	DEP-COND-00001	21' L x 4' W x 10' H	84 ft^2
E-0102	DEP-COND-00002	8' L x 2' W x 2' H	16 ft^2
E-0102	DEP-COND-00003	6' L x 1' W x 2' H	6 ft^2

A-3.8 The Evaporator Separator (DEP-EVAP-00001), Evaporator Condensers (DEP-COND-00001/2/3), Evaporator Reboiler (DEP-RBLR-00001), Reboiler Condensate Collection Vessel (DEP-VSL-00008), Steam Condensate Water Blowdown Vessel (SCW-VSL-00054), and the Evaporator Concentrate/Feed LAW Effluent Cooler (DEP-HX-00001) are not considered in determining the single largest vessel in each area because their capacities are expected to be significantly smaller than the process vessel volumes that are considered.

A-3.9 One (1) ft is added to the secondary containment height to account for the volume of miscellaneous equipment and components that may be within the containment area. The volume of miscellaneous equipment and components is not expected to challenge the volume from one foot of height in the containment area.

A-3.10 An automatic sprinkler system design density is assumed to be 0.17 gpm/ft^2 with 10 percent added to account for hydraulic overages (Applicable Documents 3.2 and Ref. A-6.6).

A-3.11 Precipitation will only accumulate in the outdoor areas.

A-4 Methodology

To determine the required liner height for the worst case scenario in each containment area, the vessels are considered to be completely filled and sitting on the floor and the largest vessel is expected to leak completely into the room. In addition, for the Evaporator Process Areas, it is also assumed that the leak has the capability of spilling between areas and normalizing within the combined area because doors/walls in the area cannot be credited as seals. Therefore, each containment area must be evaluated for the leaking of the total volume of the largest vessel in the area or 110% of the maximum operating volume, whichever is larger, as well as leaking from adjacent areas and rainfall or fire water, as applicable.

A-4.1 Conversion

Volume (ft^3) = $Volume\ (gal) \times 0.13368 \frac{ft^3}{gal}$ (Equation 1)

A-4.2 Vessel

A_{vessel} (ft^2) = Vessel Footprint Area = $\frac{\pi d^2}{4}$ (Equation 2)

Where $\pi = 3.14$
d (ft) = Vessel Diameter

A-4.3 Room Dimensions and Equations

A_{room} (ft^2) = Area of a Rectangular Room = L x W (Equation 3)

V_{room} (ft^3) = Volume of a Rectangular Room = L x W x H (Equation 4)

Where L (ft) = Length of room
W (ft) = Width of room
H (ft) = Height of room

$$A_{net}(ft^2) = Net\ Room\ Area = A_{room} - \sum A_{vessel}\ (non - failed)$$ (Equation 5)

A-4.4 Fire Water Discharge Volume for Automatic Fire Suppression Systems

V_F (ft^3) = Volume of Fire Water = $A_{room} \times \rho_{sprinkler} \times T \times 1.1$ (Equation 6)

Where A_{room} (ft^2) = Area of a Rectangular Room
$\rho_{sprinkler}$ $(gal/min/ft^2)$= Sprinkler Discharge Density (0.17 gal/min/ft^2) (Assumption A-3.10)
T (min) = Sprinkler Discharge Time (20 minutes) (Input A-2.1)
1.1 = 10% Margin for Hydraulic Overages (Assumption A-3.10)

A-4.5 Rainfall Volume

V_R (ft^3) = Volume of Rainfall = $A_{room} \times \left(H_r \times \frac{1\ ft}{12\ in}\right)$ (Equation 7)

Where A_{room} (ft^2) = Area of a Rectangular Room
H_r (in) = Height of Rainfall from a Twenty-Five-Year, Twenty-Four-Hour Rainfall Event
= 1.56 inches (Input A-2.3)

A-4.6 Accumulated Liquid Volume and Required Liner Height

V_T = Total Accumulated Liquid Volume
= V_V + (V_F or V_R), whichever is applicable (Equation 8)

Where V_V = 100% Total Vessel Volume or 110% of the Maximum Operating Volume, whichever is larger
V_F = Volume of Fire Water
V_R = Volume of Rainfall

H_L (ft) = Required Liner Height = $\frac{V_T}{A_{net}}$ +1 ft (Equation 9)

Where V_T (ft^3) = Total Accumulated Liquid Volume
A_{net} (ft^2) = Net Room Area
1 ft = Volume of Miscellaneous Equipment and Components (Assumption A-3.9)

A-5 Calculations

A-5.1 **Required Liner Height for Low Point Drain Vessel Area, Room ED-B001, Elevation -39 ft**

Scenario: Failure of the Low Point Drain Vessel (DEP-VSL-00001) and accumulation of fire water from automatic fire suppression system discharge (Assumption A-3.5). No rainfall will accumulate (A-3.11)

The total vessel volume is compared to 110% of the maximum operating volume of the vessel to determine the controlling volume:

$$Total\ Vessel\ Volume = 18{,}000\ gal \text{ (Assumption A-3.6)}$$
$$110\%\ Maximum\ Operating\ Volume = 1.10 \times\ 13{,}800\ gal = 15{,}180\ gal \text{ (Assumption A-3.6)}$$
$$18{,}000\ gal > 15{,}180\ gal\ \ \therefore \text{ Total Vessel Volume is the Controlling Volume}$$

The total accumulated liquid volume for the Low Point Drain Vessel Area is calculated using the following equation:

$$V_T = V_V + V_F (Equation\ 8)$$

Where

$V_V(gal) = Controlling\ Volume =\ 18{,}000\ gal\ (Total\ Vessel\ Volume)$(Assumption A-3.6)

$V_V(ft^3) = 18{,}000\ gal \times 0.13368\ \frac{ft^3}{gal} \cong 2{,}406\ ft^3 (Equation\ 1)$

$V_F = A_{room} \times \rho_{sprinkler} \times T \times 1.1\ (Equation\ 6)$

$A_{room} = 924\ ft^2$ (Assumption A-3.4)

$V_F\ (gal) = 924\ ft^2 \times 0.17\ gal/min/ft^2 \times 20\ min \times 1.1 = 3{,}455.76\ gal$

$V_F(ft^3) = 3{,}455.76\ gal \times 0.13368 \frac{ft^3}{gal} \cong 462\ ft^3 (Equation\ 1)$

Therefore,

$V_T(ft^3) = 2{,}406 ft^3 + 462 ft^3 = 2{,}868 ft^3$

$V_T(gal) = 18{,}000\ gal + 3455.76\ gal \cong 21{,}456\ gal$

The required liner height for the room is calculated using the following equation:

H_L = Required Liner Height = $\frac{V_T}{A_{net}} + 1\ ft$ (Equation 9)

The net room area (A_{net}) is the combined footprint from the non-failed vessels in the room subtracted from the room area. There are no other vessels in the Low Point Drain Vessel Area.

$A_{net} = A_{room} - \sum A_{vessel}\ (non - failed)$ (Equation 5)

$\sum A_{vessel}\ (non - failed) = 0\ ft^2$ (Equation 2)

$A_{net} = 924\ ft^2 - 0\ ft^2 = 924\ ft^2$

Therefore,

$$H_L = \frac{2{,}868 ft^3}{924 ft^2} + 1\ ft = 4.10 ft \cong 4\ ft\ 2\ inches\ (rounded\ up\ to\ the\ next\ inch)$$

A-5.2 **Required Liner Height for Evaporator Feed Vessel Area, Room E-0105, Elevation 0 ft**

Scenario: Leakage and spillage of the single largest vessel in area, Evaporator Feed Vessel (DEP-VSL-00002) (Assumption A-3.6) and accumulation of rainfall (Assumption A-3.11). No accumulation of fire water from automatic fire suppression system discharge (Assumption A-3.5).

The total vessel volume is compared to 110% of the maximum operating volume of the vessel to determine the controlling volume:

$Total\ Vessel\ Volume = 42{,}300\ gal$ (Assumption A-3.6)

110% $Maximum\ Operating\ Volume = 1.10 \times\ 38{,}000\ gal = 41{,}800\ gal$ (Assumption A-3.6)

$42{,}300\ gal > 41{,}800\ gal$ ∴ Total Vessel Volume is the Controlling Volume

The total accumulated liquid volume for the Evaporator Feed Vessel area is calculated using the following equation:

$$V_T = V_V + V_R (Equation\ 8)$$

Where

$V_V(gal) = Controlling\ Volume = \ 42{,}300\ gal\ (Total\ Vessel\ Volume)$ (Assumption A-3.6)

$$V_V(ft^3) = 42{,}300 gal \times 0.13368 \frac{ft^3}{gal} \cong 5{,}655\ ft^3 (Equation\ 1)$$

V_R = Volume of Rainfall = $A_{room} \times \left(H_r \times \frac{1\ ft}{12\ in}\right)$ (Equation 7)

$A_{room} = 1{,}774\ ft^2$ (Assumption A-3.4)

$$V_R(ft^3) = 1{,}774\ ft^2 \times \left(1.56\ in\ \times \frac{1 ft}{12 in}\right) \cong 231\ ft^3$$

$$V_R\ (gal) = 231\ ft^3 \times \frac{1\ gal}{0.13368\ ft^3} \cong 1{,}728\ gal\ (Equation\ 1)$$

Therefore,

$$V_T(ft^3) = 5{,}655\ ft^3 + 231\ ft^3 = 5{,}886\ ft^3$$

$$V_T\ (gal) = 42{,}300\ gal + 1{,}728\ gal = 44{,}028\ gal$$

The required liner height for the room is calculated using the following equation:

$$H_L = \text{Required Liner Height} = \frac{V_T}{A_{net}} + 1\ ft \text{ (Equation 9)}$$

The net room area (A_{net}) is the combined footprint from the non-failed vessels in the room subtracted from the room area. The non-failed vessels are all three Evaporator Concentrate Vessels (DEP-VSL-00003A/B/C).

$$A_{net} = A_{room} - \sum A_{vessel}\ (non - failed) \qquad \text{(Equation 5)}$$

$$\sum A_{vessel}\ (non - failed) = 3\left(\frac{\pi d_{conc}^2}{4}\right) \text{ (Equation 2)}$$

d_{conc}= Diameter of Concentrate Vessel = 12 ft 1 in (Assumption A-3.6)

$$\sum A_{vessel}\ (non - failed) = 3\left(\frac{\pi\left[12\ ft + \left(1\ in \times \frac{1ft}{12in}\right)\right]^2}{4}\right) = 344\ ft^2$$

$$A_{net}\ =\ 1{,}774\ ft^2 - 344\ ft^2\ =\ 1{,}430\ ft^2$$

Therefore,

$$H_L = \frac{5{,}886 ft^3}{1{,}430 ft^2} + 1ft = 5.12ft \cong 5\ ft\ 2\ inches\ (rounded\ up\ to\ the\ next\ inch)$$

A-5.3 Required Liner Height for Process Condensate Lag Storage Vessel Area, Room E-0106, Elevation 0 ft

Scenario: Leakage and spillage of the single largest vessel in the area, one of the Process Condensate Lag Storage Vessels (DEP-VSL-00005A/B) and accumulation of rainfall (Assumption A-3.11). No accumulation of fire water from automatic fire suppression system discharge (Assumption A-3.5).

The total vessel volume is compared to 110% of the maximum operating volume of the vessel to determine the controlling volume:

$$Total\ Vessel\ Volume = 127{,}260\ gal \text{ (Assumption A-3.6)}$$
$$110\%\ Maximum\ Operating\ Volume = 1.10 \times\ 111{,}761\ gal = 122{,}937\ gal \text{ (Assumption A-3.6)}$$
$$127{,}260\ gal > 122{,}937\ gal\ \ \therefore \text{ Total Vessel Volume is the Controlling Volume}$$

The total accumulated liquid volume for the Process Condensate Lag Storage Vessel Area is calculated using the following equation:

$$V_T = V_V + V_R (Equation\ 8)$$

Where

$V_V(gal) = Controlling\ Volume =\ 127{,}260\ gal\ (Total\ Vessel\ Volume)$ (Assumption A-3.6)

$$V_V(ft^3) = 127{,}260\ gal \times 0.13368 \frac{ft^3}{gal} \cong 17{,}012\ ft^3 (Equation\ 1)$$

V_R (ft^3) = Volume of Rainfall = $A_{room} \times \left(H_r \times \frac{1\ ft}{12\ in}\right)$ (Equation 7)

$A_{room} = 3{,}837\ ft^2$ (Assumption A-3.4)

$$V_R(ft^3) = 3{,}837\ ft^2 \times \left(1.56\ in\ \times \frac{1ft}{12in}\right) \cong 499\ ft^3$$

$$V_R\ (gal) = 499\ ft^3 \times \frac{1\ gal}{0.13368\ ft^3} \cong 3733\ gal\ (Equation\ 1)$$

Therefore,

$$V_T(ft^3) = 17{,}012\ ft^3 + 499\ ft^3 = 17{,}511\ ft^3$$

$$V_T\ (gal) = 127{,}260\ gal + 3{,}733\ gal = 130{,}993\ gal$$

The required liner height for the room is calculated using the following equation:

H_L (ft) = Required Liner Height = $\frac{V_T}{A_{net}}$ + 1 ft (Equation 9)

The net room area (A_{net}) is the combined footprint from the non-failed vessels in the room subtracted from the room area. The non-failed vessels are one of the Process Condensate Lag Storage Vessel (DEP-VSL-00005A/B) and both of the Overhead Sampling Vessels (DEP-VSL-00004A/B).

$A_{net} = A_{room} - \sum A_{vessel}\ (non - failed)$ (Equation 5)

$\sum A_{vessel}\ (non - failed) = \left(\frac{\pi d_{lag}^2}{4}\right) + 2\left(\frac{\pi d_{overhead}^2}{4}\right)$ (Equation 2)

d_{lag} = Diameter of Lag Storage Vessel = 25 ft 1 in (Assumption A-3.6)

$d_{overhead}$ = Diameter of Overhead Sampling Vessel = 14 ft 1 in (Assumption A-3.6)

$$\sum A_{vessel}\ (non - failed) = \left(\frac{\pi\left(\left[25ft + \left(1\ in \times \frac{1ft}{12in}\right)\right]^2\right)}{4}\right) + 2\left(\frac{\pi\left[14ft + \left(1\ in \times \frac{1ft}{12in}\right)\right]^2}{4}\right)$$

$$= 806\ ft^2$$

$$A_{net} = 3{,}837\ ft^2 - 806\ ft^2 = 3{,}031\ ft^2$$

Therefore,

$$H_L = \frac{17{,}511 ft^3}{3{,}031 ft^2} + 1ft = 6.78\ ft \cong 6\ ft\ 10\ inch\ (rounded\ up\ to\ the\ next\ inch)$$

A-5.4 Required Liner Heights for the West (E-0103) and East (E-0102) Evaporator Process Areas, Elevation 0 ft

Two scenarios are evaluated for West and East Evaporator Process Areas to determine the most conservative liner heights.

A-5.4.1 Scenario One for West Evaporator Process Area (E-0103)

Scenario: Leakage and spillage of the full volume of the single largest vessel with pump suction line in the area, Evaporator Feed Vessel (DEP-VSL-00002), into the West Evaporator Process Area as a result of an Evaporator Feed Pump suction line failure and accumulation of fire water from automatic fire suppression system discharge (Assumption A-3.5). No accumulation from rainfall (Assumption A-3.11).

The total vessel volume is compared to 110% of the maximum operating volume of the vessel to determine the controlling volume:

$$Total\ Vessel\ Volume = 42{,}300\ gal \text{ (Assumption A-3.6)}$$
$$110\%\ Maximum\ Operating\ Volume = 1.10 \times\ 38{,}000\ gal = 41{,}800\ gal \text{ (Assumption A-3.6)}$$
$$42{,}300\ gal > 41{,}800\ gal\ \ \therefore \text{ Total Vessel Volume is the Controlling Volume}$$

The total accumulated liquid volume for the West Evaporator Process Area is calculated using the following equation:

$$V_T = V_V + V_F (Equation\ 8)$$

Where

$$V_V(gal) = Controlling\ Volume = \ 42{,}300\ gal\ (Total\ Vessel\ Volume) \text{ (Assumption A-3.6)}$$

$$V_V(ft^3) = 42{,}300\ gal \times 0.13368 \frac{ft^3}{gal} \cong 5{,}655\ ft^3 (Equation\ 1)$$

$$V_F = A_{room} \times \rho_{sprinkler} \times T \times 1.1\ (Equation\ 6)$$

$$A_{room} = 3{,}503\ ft^2 \qquad \text{(Assumption A-3.4)}$$

$$V_F(gal) = 3{,}503\ ft^2 \times 0.17 gal/min/ft^2 \times 20\ min \times 1.1 = 13101.22 gal$$
$$V_F(ft^3) = 13{,}101.22\ gal \times 0.13368 \frac{ft^3}{gal} \cong 1{,}751\ ft^3 (Equation\ 1)$$

Therefore,

$$V_T(ft^3) = 5{,}655 ft^3 + 1{,}751 ft^3 = 7{,}406\ ft^3$$

$$V_T(gal) = 42{,}300\ gal + 13{,}101.22\ gal \cong 55{,}401\ gal$$

The required liner height for the room is calculated using the following equation:

$$H_L = \text{Required Liner Height} = \frac{V_T}{A_{net}} + 1\ \text{ft} \qquad \text{(Equation 9)}$$

The net room area (A_{net}) is the combined footprint from the non-failed vessels in the room subtracted from the room area. The non-failed vessels are the Evaporator (DEP-EVAP-00001), the Evaporator Reboiler (DEP-RBLR-00001), and the Evaporator Concentrate/Feed LAW Effluent Cooler (DEP-HX-00001).

$$A_{net} = A_{room} - \sum A_{vessel}\ (non - failed) \qquad \text{(Equation 5)}$$

$$\sum A_{vessel}\ (non - failed) = A_{EVAP} + A_{RBLR} + A_{HX}$$
$$= 79ft^2 + 24ft^2 + 7ft^2 = 110ft^2 \text{ (Assumption A-3.7)}$$

$A_{net} = 3{,}503\ ft^2 - 110\ ft^2 = 3{,}393\ ft^2$

Therefore,

$$H_L = \frac{7{,}406ft^3}{3{,}393ft^2} + 1\ ft = 3.18ft \cong 3\ ft\ 3\ inches\ (rounded\ up\ to\ the\ next\ inch)$$

A-5.4.2 Scenario One for East Evaporator Process Area (E-0102)

Scenario: Leakage and spillage of the full volume of the single largest vessel with a pump suction line in the area, one of the Process Condensate Lag Storage Vessels (DEP-VSL-00005A/B), into the East Evaporator Process Area as a result of a Process Condensate Lag Storage Vessel pump suction line failure and accumulation of fire water from automatic fire suppression system discharge (Assumption A-3.5). No accumulation from rainfall (Assumption A-3.11).

The total vessel volume is compared to 110% of the maximum operating volume of the vessel to determine the controlling volume:

$$Total\ Vessel\ Volume = 127{,}260\ gal \text{ (Assumption A-3.6)}$$
$$110\%\ Maximum\ Operating\ Volume = 1.10 \times\ 111{,}761\ gal = 122{,}937\ gal \text{ (Assumption A-3.6)}$$
$$127{,}260\ gal > 122{,}937\ gal\ \ \therefore \text{ Total Vessel Volume is the Controlling Volume}$$

The total accumulated liquid volume for the East Evaporator Process Area is calculated below:

$$V_T = V_V + V_F (Equation\ 8)$$

Where

$$V_V(gal) = Controlling\ Volume =\ 127{,}260\ gal\ (Total\ Vessel\ Volume) \text{ (Assumption A-3.6)}$$
$$V_V(ft^3) = 127{,}260\ gal \times 0.13368\frac{ft^3}{gal} \cong 17{,}012\ ft^3 (Equation\ 1)$$

$V_F = A_{room} \times \rho_{sprinkler} \times T \times 1.1$ $(Equation\ 6)$

$A_{room} = 5{,}859\ ft^2$ (Assumption A-3.4)

$V_F(gal) = 5{,}859\ ft^2 \times 0.17 gal/min/ft^2 \times 20\ min \times 1.1 = 21{,}912.66\ gal$

$V_F(ft^3) = 21{,}912.66\ gal \times 0.13368\ \frac{ft^3}{gal} \cong 2{,}929\ ft^3 (Equation\ 1)$

Therefore,

$V_T(ft^3) = 17{,}012\ ft^3 + 2{,}929\ ft^3 = 19{,}941\ ft^3$

$V_T(gal) = 127{,}260\ gal + 21{,}912.66\ gal \cong 149{,}173\ gal$

The required liner height for the room is calculated using the following equation:

H_L = Required Liner Height = $\frac{V_T}{A_{net}} + 1\ ft$ (Equation 9)

The net room area (A_{net}) is the combined footprint from the non-failed vessels in the room subtracted from the room area. The non-failed vessels are the Steam Condensate Water Blowdown Vessel (SCW-VSL-00054), Reboiler Condensate Collection Vessel (DEP-VSL-00008), and Evaporator Condensers (DEP-COND-00001/2/3).

$$A_{net} = A_{room} - \sum A_{vessel}\ (non - failed) \qquad \text{(Equation 5)}$$

$$\sum A_{vessel}\ (non - failed) = A_{SCW} + A_{VSL8} + A_{COND1} + A_{COND2} + A_{COND3}$$
$$= 13\ ft^2 + 13\ ft^2 + 84\ ft^2 + 16\ ft^2 + 6\ ft^2 = 132\ ft^2$$
(Assumption A-3.7)

$A_{net} = 5{,}859\ ft^2 - 132\ ft^2 = 5{,}727\ ft^2$

Therefore,

$$H_L = \frac{19{,}941 ft^3}{5{,}727 ft^2} + 1\ ft = 4.48\ ft \cong 4\ ft\ 6\ inches\ (rounded\ up\ to\ the\ next\ inch)$$

A-5.4.3 Scenario Two for West and East Evaporator Process Areas

Scenario: The full volume of the single largest vessel with a pump suction in either Evaporator Process Areas, one of the Process Condensate Lag Storage Vessels (DEP-VSL-00005A/B) normalizing between the combined process areas. Additionally, fire water from automatic fire suppression system discharge is accumulated (Assumption A-3.5). No accumulation of rainfall (Assumption A-3.11)

The total accumulated liquid volume for the West and East evaporator process areas is calculated using the following equation:

$$V_T = V_V + V_F \ (Equation\ 8)$$

Where

$V_V(gal) = Controlling\ Volume = \ 127{,}260\ gal\ (Total\ Vessel\ Volume)$(Assumption A-3.6)

$V_V(ft^3) = 127{,}260\ gal \times 0.13368\ \frac{ft^3}{gal} \cong 17{,}012\ ft^3 (Equation\ 1)$

$V_F = A_{room} \times \rho_{sprinkler} \times T \times 1.1\ (Equation\ 6)$

$A_{room} = (3{,}503\ ft^2 + 5{,}859\ ft^2) = 9{,}362 ft^2$ (Assumption A-3.4)

$V_F(gal) = 9{,}362\ ft^2 \times 0.17\ gal/min/ft^2 \times 20\ min \times 1.1 = 35{,}013.88\ gal$

$V_F(ft^3) = 35{,}013.88\ gal \times 0.13368 \frac{ft^3}{gal} \cong 4{,}681 ft^3 (Equation\ 1)$

Therefore,

$V_T(ft^3) = 17{,}012\ ft^3 + 4{,}681\ ft^3 = 21{,}693\ ft^3$

$V_T(gal) = 127{,}260\ gal + 35{,}013.88\ gal \cong 162{,}274\ gal$

The required liner height for the room is calculated using the following equation:

H_L = Required Liner Height = $\frac{V_T}{A_{net}} + 1ft$ (Equation 9)

The net room area (A_{net}) is the combined footprint from the non-failed vessels in the room subtracted from the room area. The non-failed vessels are the Evaporator Separator (DEP-EVAP-00001), Evaporator Reboiler (DEP-RBLR-00001), Evaporator Concentrate/Feed LAW Effluent Cooler (DEP-HX-00001), Steam Condensate Water Blowdown Vessel (SCW-VSL-00054), Reboiler Condensate Collection Vessel (DEP-VSL-00008), and Evaporator Condensers (DEP-COND-00001/2/3).

$$A_{net} = A_{room} - \sum A_{vessel}\ (non - failed) \qquad \text{(Equation 5)}$$

$$\sum A_{vessel}(non - failed) = A_{EVAP} + A_{RBLR} + A_{HX} + A_{SCW} + A_{VSL8} + A_{COND1} + A_{COND2} + A_{COND3}$$

$$\sum A_{vessel}(non - failed) = 79ft^2 + 24ft^2 + 7ft^2 + 13\text{ft}^2 + 13\text{ft}^2 + 84\text{ft}^2 + 16\text{ft}^2 + 6\text{ft}^2$$
$$= 242\ ft^2 \text{ (Assumption A-3.7)}$$

A_{net} = 9,362 ft^2 – 242 ft^2 = 9120 ft^2

Therefore,

$$H_L = \frac{21{,}693 ft^3}{9{,}120 ft^2} + 1ft = 3.38\ ft \cong 3\ ft\ 5\ inches\ (rounded\ up\ to\ the\ next\ inch)$$

The required liner height for this scenario is greater than the required liner height calculated in Scenario 1 for the West Evaporator Process Area, but smaller than the required liner height calculated in Scenario 1 for the East Evaporator Process Area. Therefore, 3 ft 5 inches will be the required liner height for the West Evaporator Process Area and 4 ft 6 inches will be the required liner height for the East Evaporator Process Area.

A-5.5 Calculation Summary

Calculation Section Number	Elevation (ft)	Containment Area Room Number	Area of Room (ft^2)	Area of Non-Failed Vessels (ft^2)	Net Room Area (ft^2)	Total Volume of Largest Vessel (gal)	Total Volume of Largest Vessel (ft^3)	Fire Water Volume (gal)	Fire Water Volume (ft^3)	Rainfall Volume (gal)	Rainfall Volume (ft^3)	Total Accumulated Liquid Volume (gal)	Total Accumulated Liquid Volume (ft^3)	Required Liner Height (ft)
A-5.1	-39	ED-B001 (Low Point Drain Vessel Area)	924	0	924	18,000	2,406	3,456	462	Not Applicable. Rainfall is not accumulated in indoor areas.		21,456	2,868	4 ft 2 in
A-5.2	0	E-0105 (Evaporator Feed Vessel Area)	1,774	344	1,430	42,300	5,655	Not Applicable. Fire water is not accumulated in outdoor areas.		1,728	231	44,028	5,886	5 ft 2 in
A-5.3	0	E-0106 (Process Condensate Lag Storage Vessel Area)	3,837	806	3,031	127,260	17,012			3,733	499	130,993	17,511	6 ft 10 in
A-5.4.1	0	E-0103 (West Evaporator Process Area) Scenario 1	3,503	110	3,393	42,300	5,655	13,101	1,751	Not Applicable. Rainfall is not accumulated in indoor areas.		55,401	7,406	3 ft 3 in
A-5.4.2	0	E-0102 (East Evaporator Process Area) Scenario 1	5,859	132	5,727	127,260	17,012	21,913	2,929			149,173	19,941	4 ft 6 in
A-5.4.3	0	E-0102/E-0103 (West & East Evaporator Process Area) Scenario 2	9,362	242	9,120	127,260	17,012	35,014	4,681			162,274	21,693	3 ft 5 in

A-6 References

A-6.1 24590-BOF-P1-25-00001, Rev. 0, Balance of Facilities LAW Effluent Process Bldg & LAW Effluent Drain Tank Bldg General Arrangement Plan at Elev. 0'-0".

A-6.2 24590-WTP-DB-ENG-01-001, Rev. 3, Basis of Design

A-6.3 24590-BOF-M0C-DEP-00001, Rev. B, Liner Height Calculation in the EMF

A-6.4 PNL-4622 UC-11, June 1983, Climatological Summary for the Hanford Area

A-6.5 24590-BOF-A5-25-05200001, Rev. 0, LAW Effluent Process Bldg 25 & Drain Tank Bldg 25A Architectural Room Finish Schedule

A-6.6 24590-WTP-GPG-M-033, Rev. 4, Fire Water Floor Drain System

Issued by
RPP-WTP PDC

BECHTEL

Document title: **Waste Removal Capability for the Direct Feed LAW Effluent Management Facility (EMF)**

Document number: 24590-BOF-PER-M-16-002, Rev 0

Contract number: DE-AC27-01RV14136

Department: Mechanical Systems

Author(s): Elaine Tsai Elaine Tsai

Checked by: Bryant Leung Bryant Leung

Issue status: Issued for Permitting Use

Approved by: Youssef Mohammad-Zadeh

Approver's position: Engineering Group Supervisor

Approver's signature: Mehdi Soltani MS for YM — Signature

10/24/16 — Date

Contents of this document are Dangerous Waste Permit Affecting.

River Protection Project
Waste Treatment Plant
2435 Stevens Center Place
Richland, WA 99354
United States of America
Tel: 509 371 2000

This bound document contains a total of 18 sheets

Notice

Please note that source, special nuclear, and byproduct materials, as defined in the Atomic Energy Act of 1954 (AEA), are regulated at the US Department of Energy (DOE) facilities exclusively by DOE acting pursuant to its AEA authority. DOE asserts, that pursuant to the AEA, it has sole and exclusive responsibility and authority to regulate source, special nuclear, and byproduct materials at DOE-owned nuclear facilities. Information contained herein on radionuclides is provided for process description purposes only.

History Sheet

Rev	Reason for revision	Revised by
0	Issued for Permitting Use.	E. Tsai

Contents

Notice iii

History Sheet iii

Acronyms v

1 Summary 1

2 Objective 4

3 Description 4

4 Assumptions 5

5 Analysis 6

6 Calculations 9

7 Waste and Accumulated Liquid Removal Rates 12

8 References 13

Acronyms

AEA	Atomic Energy Act of 1954
DOE	Department of Energy
DFLAW	Direct Feed Low Activity Waste
EMF	Effluent Management Facility
WAC	Washington Administrative Code

1 Summary

The Effluent Management Facility (EMF) must satisfy the waste removal criteria of Washington Administrative Code (WAC) 173-303-640(4) (Ref. 8.1) and of Dangerous Waste Permit Number WA7890008967 (Ref. 8.2) Permit Condition III.10.E.9.e.iii for EMF tank and miscellaneous unit system secondary containment systems. This report evaluates the capability for removing, within 24 hours, bounding volumes of leaked waste from the secondary containment areas. For outdoor vessel areas, the bounding volume includes rainfall from a twenty-five-year, twenty-four-hour rainfall event. For indoor areas, the bounding volume includes 20 minutes of sprinkler fire water that may accumulate within the regulated secondary containment areas of EMF.

The secondary containment areas with sump(s) are located at the (-) 39 feet and 0 feet elevations of EMF. The secondary containment areas are lined with a stainless steel liner or a special protective coating. The liners are sloped to direct liquids to dry sump(s) in the area. All sumps contain level detection instrumentation, which indicate increases in fluid levels in the sump. When liquid is initially detected in the sumps, an alarm will alert the operators to take action. The sump(s) within the EMF process building as well as the Drain Tank building are emptied by sump pumps that can transfer accumulated liquids to process vessels for storage and subsequent processing.

Total accumulated liquid volumes from dangerous waste, rainfall, and fire water are calculated for the containment areas listed below, as appropriate:

1. Room ED-B001, Low Point Drain Vessel Area, (-) 39 ft. elevation. The Low Point Drain Vessel Area contains the Low Point Drain Vessel (DEP-VSL-00001). The total accumulated volume (21,456 gallons) in this area includes the total vessel volume (18,000 gallons) and the volume (3,456 gallons) of accumulated fire water.

2. Room E-0105, Evaporator Feed Vessel Area, 0 ft. elevation. The Evaporator Feed Vessel Area contains the Evaporator Feed Vessel (DEP-VSL-00002) as well as three Evaporator Concentrate Vessels (DEP-VSL-00003A/B/C). The total accumulated volume (44,028 gallons) in this area includes the total vessel volume (42,300 gallons) of the single largest vessel in the area, the Evaporator Feed Vessel, and the volume (1,728 gallons) of accumulated rainfall.

3. Room E-0106, Process Condensate Lag Storage Vessel Area, 0 ft. elevation. The Process Condensate Lag Storage Area contains two Overhead Sampling Vessels (DEP-VSL-00004A/B) and two Process Condensate Lag Storage Vessels (DEP-VSL-00005A/B). The total accumulated volume (130,993 gallons) in this area includes the total vessel volume (127,260 gallons) of the single largest vessel in the area, one of the Process Condensate Lag Storage Vessels (DEP-VSL-00005A/B), and the volume (3,733 gallons) of accumulated rainfall.

4. Room E-0103, West Evaporator Process Area, 0 ft. elevation. The West Evaporator Process Area contains the Evaporator Feed Vessel discharge pumps (DEP-PMP-00002A/B and DEP-PMP-00012A/B/C), the Evaporator Concentrate Vessel discharge pumps (DEP-PMP-00003A/B), the Evaporator Separator Vessel (DEP-EVAP-00001), the Evaporator Reboiler (DEP-RBLR-00001), and the Evaporator Concentrate/Feed LAW Effluent Cooler (DEP-HX-00001). The total accumulated volume (55,401 gallons) in this area includes the total vessel volume (42,300 gallons) of the single largest vessel connected to the pumps in the area, the Evaporator Feed Vessel (DEP-VSL-00002), and the volume (13,101 gallons) of accumulated fire water.

5. Room E-0102, East Evaporator Process Area, 0 ft. elevation. The East Evaporator Process Area contains the Overhead Sampling Vessel discharge pumps (DEP-PMP-00004A/B/C), the Process Condensate Lag Storage Vessel discharge pumps (DEP-PMP-00005A/B and DEP-PMP-00015A/B/C), three Evaporator Condensers (DEP-COND-00001/2/3), the Reboiler Condensate Collection Vessel (DEP-VSL-00008), and the Steam Condensate Water Blowdown Vessel (SCW-VSL-00054). The total accumulated volume (149,173 gallons) in this area includes the total vessel volume (127,260 gallons) of the single largest vessel connected to the pumps in the area, one of the Process Condensate Lag Storage Vessels (DEP-VSL-00005A/B), and the volume (21,913 gallons) of accumulated fire water.

6. Rooms E-0102 and E-0103, East and West Evaporator Process Areas Combined, 0 ft. elevation. Doors between the areas cannot be credited for isolating spills; therefore, liquid from one room has the potential to spill into the adjacent room. The East and West Evaporator Process Areas contain the Overhead Sampling Vessel discharge pumps (DEP-PMP-00004A/B/C), the Process Condensate Lag Storage Vessel discharge pumps (DEP-PMP-00005A/B and DEP-PMP-00015A/B/C), three Evaporator Condensers (DEP-COND-00001/2/3), the Reboiler Condensate Collection Vessel (DEP-VSL-00008), the Steam Condensate Water Blowdown Vessel (SCW-VSL-00054), Evaporator Feed Vessel discharge pumps (DEP-PMP-00002A/B and DEP-PMP-00012A/B/C), the Evaporator Concentrate Vessel discharge pumps (DEP-PMP-00003A/B), the Evaporator Separator Vessel (DEP-EVAP-00001), the Evaporator Reboiler (DEP-RBLR-00001), and the Evaporator Concentrate/Feed LAW Effluent Cooler (DEP-HX-00001). The total accumulated volume (162,274 gallons) in this area includes the total vessel volume (127,260 gallons) of the single largest vessel connected to the pumps in the area, one of the Process Condensate Lag Storage Vessels (DEP-VSL-00005A/B), and the volume (35,014 gallons) of accumulated fire water.

The capability to remove the total accumulated volume for each of the containment areas is summarized below:

1. Room ED-B001 – Liquid removal is achieved by operation of one sump pump at a flow rate of 45 gal/min. Approximate time to remove the accumulated liquid volume is 8.0 hours.

2. Room E-0105 – Liquid removal is achieved by operation of one sump pump at a flow rate of 120 gal/min. Approximate time to remove the accumulated liquid volume is 6.2 hours.

3. Room E-0106 – Liquid removal is achieved by operation of one sump pump at a flow rate of 120 gal/min. Approximate time to remove the accumulated liquid volume is 18.2 hours.

4. Room E-0103 – Liquid removal is achieved by operation of one sump pump at a flow rate of 120 gal/min. Approximate time to remove the accumulated liquid volume is 7.7 hours.

5. Room E-0102 – Liquid removal is achieved by operation of one sump pump at a flow rate of 120 gal/min. Approximate time to remove the accumulated liquid volume is 20.7 hours.

6. Rooms E-0102 & E-0103 Combined – Liquid removal is achieved by operation of one sump pump in each room at a total flow rate of 240 gal/min (120 gal/min per pump). Approximate time to remove the accumulated liquid volume is 11.2 hours.

These values are within the 24-hour period required by WAC 173-303-640(4) (Ref. 8.1) and stipulated by Permit Condition III.10.E.9.e.iii (Ref. 8.2). These values are based on consideration of 100% of the total volume of the single largest vessel in each containment area, anticipated fire water, and rainfall, as applicable, that is postulated to accumulate in each area.

The process for ensuring the sumps are dry are described for each area below:

1. Room ED-B001 – The Low Point Drain Vessel Area is an indoor moderate radiation area. Since there will be no rain in the building, sampling of the accumulated liquid is not required. After the maximum volume of accumulated liquid has been transferred by the sump pump, manual entry is required to rinse and flush the room. The rinse/flush water is then transferred by the sump pump. A small amount of residual rinse/flush liquid will remain due to pumping capability and backflow from piping. The residual rinse/flush liquid will be removed through means determined appropriate by operations.

2. Room E-0105 – The Evaporator Feed Vessel Area is an outdoor high radiation classification area. Due to the possibility of frequent rain accumulation, sampling is required to determine whether sump accumulation is rain water or a process leak. To minimize operator entry once a sump high level alarm is tripped, dedicated sampling pumps within this area will pump samples of liquid to a sampling container within the fume hood located in the East Evaporator Process Area (E-0102) to determine the contents of the sump and the destination of the sump pump transfers. If the liquid is a process leak, manual entry is required to rinse and flush the room after the maximum volume of accumulated liquid has been transferred by one of the sump pumps. The rinse/flush water is then transferred by the sump pump. Residual rinse/flush liquid will remain due to pumping capability and backflow from piping. The residual rinse/flush liquid will be removed through means determined appropriate by operations, which may include the usage of the sampling pumps. If the liquid is rainwater, after the maximum volume of accumulated liquid has been transferred, manual entry may be required to remove the residual liquid unless it is left to evaporate.

3. Room E-0106 – The Process Condensate Lag Storage Area is an outdoor low radiation classification area. Although there is possibility of frequent rain accumulation, the accumulation will be transferred to a non-leaking Process Condensate Lag Storage Vessel (DEP-VSL-00005A/B) regardless of whether the liquid is rain water or a process leak, therefore, sampling is not required. After the maximum volume of accumulated liquid has been transferred by one of the sump pumps, manual entry is required to rinse and flush the room if the accumulated liquid is a process leak. Residual rinse/flush liquid will remain due to pumping capability and backflow from piping. The residual rinse/flush liquid will be removed through means determined appropriate by operations. If the liquid is rainwater, after the maximum volume of accumulated liquid has been transferred, manual entry may be required to remove the residual liquid unless it is left to evaporate.

4. Room E-0103 – The West Evaporator Process Area is an indoor moderately high radiation area. Since there will be no rain in the building, sampling is not required. After the maximum volume of accumulated liquid has been transferred by one of the sump pumps, manual entry is required to rinse and flush the room. The rinse and flush water is then transferred out by one of the sump pumps. Residual rinse/flush liquid will remain due to pumping capability and backflow from piping. The residual rinse/flush liquid will be removed through means determined appropriate by operations.

5. Room E-0102 – The East Evaporator Process Area is an indoor moderate radiation area. Since there will be no rain in the building, sampling is not required. After the maximum volume of accumulated liquid has been transferred by one of the sump pumps, manual entry is required to rinse and flush the room. The rinse and flush water is then transferred out by one of the sump pumps. Residual rinse/flush liquid will remain due to pumping capability and backflow from piping. The residual rinse/flush liquid will be removed through means determined appropriate by operations.

6. Rooms E-0102 & E-0103 Combined – The East and West Evaporator Process Area is an indoor moderately high radiation area. Since there will be no rain in the building, sampling is not required. After the maximum volume of accumulated liquid has been transferred by one sump pump in each room, manual entry is required to rinse and flush the rooms. The rinse and flush water is then transferred out by one sump pump in each room. Residual rinse/flush liquid will remain due to pumping capability and backflow from piping. The residual rinse/flush liquid will be removed through means determined appropriate by operations.

2 Objective

The objective of this report is to estimate and document the capability of removing spills, leaked waste, and accumulated liquids in the secondary containment systems of EMF within twenty-four hours as required by Washington Administrative Code (WAC) 173-303-640(4) (Ref. 8.1) and Dangerous Waste Permit WA7890008967 Condition III.10.E.9.e.iii (Ref. 8.2).

3 Description

The regulatory requirements for the secondary containment areas are contained in WAC 173-303-640(4), (Ref. 8.1). The regulatory requirement states that secondary containment systems must be:

> "Sloped or otherwise designed or operated to drain and remove liquids resulting from leaks, spills, or precipitation. Spilled or leaked waste and accumulated precipitation must be removed from the secondary containment system within twenty-four hours…" [WAC 173-303-640(4)(c)(iv)]

The Waste Treatment Plant Dangerous Waste Permit (Ref. 8.2), Permit Condition III.10.E.9.e.iii requires submittal of:

> "Detailed operational plans and descriptions, demonstrating that spilled or leaked waste and accumulated liquids can be removed from the secondary containment system within twenty-four (24) hours" [WAC 173-303-806(4)(c)(vii)]

The total accumulated volume in each secondary containment area that is required to be removed will be the volume that must be contained by the external liners, which is composed of the following:

1. "… one hundred percent of the capacity of the largest tank within its boundary" [WAC 173-303-640(4)(e)(i)(A)] (Ref. 8.1)

2. "… precipitation from a twenty-five-year, twenty-four-hour rainfall event" [WAC 173-303-640(4)(e)(i)(B)] (Ref. 8.1), as applicable.
3. "… fire-protection water from the fire protection system over the minimum design area for a period of 20 minutes…" [Basis of Design Section 14.10.1.2.1] (Ref. 8.6), as applicable.

4 Assumptions

4.1 Design flow rates, the bounding flow requirement, for sump pumps are used to estimate approximate time to remove accumulated volume. Purchased equipment will have capacities equal to or exceeding the design flow rate. If the purchased equipment has a higher capacity, the time required to remove the accumulated volume will decrease. Therefore, this assumption is conservative.

4.2 Specific operator response times are omitted for the purposes of this calculation. This includes time required:

- To respond after a leak has been detected
- To manually align valves
- To activate sump pumps
- For subsequent operator responses.

It is assumed that there will be sufficient operator response time provided outside of the required sump pump operation time.

4.3 Waste removal is achieved by operation of one sump pump within a containment area at a time.

4.4 Only one area in the facility accumulates liquid at a time. However, the leaking and spilling from accumulated liquids of one area is expected to have the potential of spilling into its adjacent area since doors are not credited to isolate the accumulated liquids.

4.5 The Evaporator Separator (DEP-EVAP-00001), Evaporator Condensers' (DEP-COND-00001/2/3), Evaporator Reboiler (DEP-RBLR-00001), Reboiler Condensate Collection Vessel (DEP-VSL-00008), Steam Condensate Water Blowdown Vessel (SCW-VSL-00054), and Evaporator Concentrate/Feed LAW Effluent Cooler (DEP-HX-00001) volumes are not considered in determination of accumulated liquid volumes because their capacities are smaller than the process vessel volumes considered.

4.6 All inside areas are assumed to have a fire sprinkler system. All outside areas are assumed not to have a fire sprinkler system.

4.7 The containment areas are assumed to be either indoor or outdoor as shown in the following table per the EMF General Arrangement Drawing (Ref. 8.3):

Room	Area	Indoor/Outdoor
ED-B001	Low Point Drain Vessel Area	Indoor

E-0105	Evaporator Feed Vessel Area	Outdoor
E-0106	Process Condensate Lag Storage Vessel Area	Outdoor
E-0103	West Evaporator Process Area	Indoor
E-0102	East Evaporator Process Area	Indoor

5 Analysis

The secondary containment areas located at the (-) 39 feet and 0 feet elevations of EMF are provided with sump(s). The liners are sloped to direct liquids to dry sump(s) in the secondary containment areas. The containment areas and sump(s) are shown on the Balance of Facilities LAW Effluent Process Building and LAW Effluent Drain Tank Building General Arrangement Plan (Ref. 8.3). The total accumulated volume of an indoor area is the total vessel volume of the single largest vessel in the containment area and the volume of accumulated fire water. The total accumulated volume of an outdoor area is the total vessel volume of the single largest vessel in the containment area and the volume of accumulated rainfall. The sump pump design flow rates are taken from the DEP Sump, Sump Pump and Pipeline Sizing mechanical calculation (Ref. 8.4) and the vessel, fire water, and rainfall volumes are calculated in and taken and rounded up to the nearest whole number from the Dangerous Waste Permit (DWP) Liner Heights in the Effluent Management Facility (EMF) report (Ref. 8.5).

5.1 Room ED-B001, Low Point Drain Vessel Area

Room ED-B001, the Low Point Drain Vessel Area, is located below grade in the Drain Tank Building at the (-) 39 ft. elevation. It contains the Low Point Drain Vessel (DEP-VSL-00001), which has a total vessel volume of 18,000 gal.

A stainless steel liner provides secondary containment to accommodate the total volume (18,000 gal) of the Low Point Drain Vessel (DEP-VSL-00001) and 3,456 gallons of fire water for a total accumulated liquid volume of 21,456 gallons.

The floor liner is sloped towards the low-point sump (DEP-SUMP-00001), which is provided with level detection instrumentation and a sump pump (DEP-PMP-00031) to send the process leak to the Evaporator Feed Vessel (DEP-VSL-00002). After the maximum volume that can be pumped by the sump pump has been transferred, the area is manually rinsed and flushed. The rinse/flush water is then transferred. The pump has a design flow rate of 45 gal/min. Residual rinse/flush liquid will remain due to pumping capability and backflow from piping. The residual rinse/flush liquid will be removed through means determined appropriate by operations.

5.2 Room E-0105, Evaporator Feed Vessel Area

Room E-0105, Evaporator Feed Vessel Area, is located in the northwest part of EMF at the 0 ft. elevation. It contains the following four vessels:

- Evaporator Concentrate Vessel DEP-VSL-00003A (Total Volume: 14,805 gal)
- Evaporator Concentrate Vessel DEP-VSL-00003B (Total Volume: 14,805 gal)
- Evaporator Concentrate Vessel DEP-VSL-00003C (Total Volume: 14,805 gal)
- Evaporator Feed Vessel DEP-VSL-00002 (Total Volume: 42,300 gal)

A stainless steel liner provides secondary containment to accommodate the total volume (42,300 gal) of the largest vessel in the area, the Evaporator Feed Vessel (DEP-VSL-00002), and 1,728 gallons of rainfall for a total accumulated volume of 44,028 gallons.

The floor liner is sloped towards the low-point sumps (DEP-SUMP-00004A and DEP-SUMP-00004B), which are provided with level detection instrumentation and sump pumps (DEP-PMP-00034A and DEP-PMP-00034B). The sump pumps send rainwater to one of the Overhead Sampling Vessels (DEP-VSL-00004A or DEP-VSL-00004B), small process leaks to the Low Point Drain Vessel (DEP-VSL-00001), and large process leaks to one of the Overhead Sampling Vessels (DEP-VSL-00004A or DEP-VSL-00004B). The sump pumps have a design flow rate of 120 gal/min. The fluid is determined to be rainwater or a process leak through the use of separate sampling pumps (DEP-PMP-00042A/B) which pump samples of the accumulated liquid to a sampling container in the fume hood (DEP-HOOD-00001) located in the East Evaporator Process Area (Room E-0102). The size of a process leak is determined by sump level detection. When the sump is overflowing, vessel level indications for the Evaporator Feed Vessel (DEP-VSL-00002) and the Evaporator Concentrate Vessels (DEP-VSL-00003A/B/C) are monitored. If a measurable drop in vessel level is indicated, the leak size can be estimated. After the maximum volume that can be pumped by the sump pumps has been transferred to their appropriate destinations, the area is manually rinsed and flushed, as needed. The rinse/flush water is then transferred. Residual rinse/flush liquid will remain due to pumping capability and backflow from piping. The residual rinse/flush liquid will be removed through means determined appropriate by operations, which may include the usage of the sampling pumps. If the liquid is rainwater, after the maximum volume of accumulated liquid has been transferred, manual entry may be required to remove the residual liquid unless being left to evaporate.

5.3 Room E-0106, Process Condensate Lag Storage Vessel Area

Room E-0106, Process Condensate Lag Storage Vessel Area, is located in the north part of EMF at the 0 ft. elevation. It contains the following four vessels:

- Overhead Sampling Vessel DEP-VSL-00004A (Total Volume: 40,800 gal)
- Overhead Sampling Vessel DEP-VSL-00004B (Total Volume: 40,800 gal)
- Process Condensate Lag Storage Vessel DEP-VSL-00005A (Total Volume: 127,260 gal)
- Process Condensate Lag Storage Vessel DEP-VSL-00005B (Total Volume: 127,260 gal)

A special protective coating liner with water stops provides secondary containment to accommodate the total volume (127,260 gal) of the largest vessel in the area, the Process Condensate Lag Storage Vessel (DEP-VSL-00005A/B), and 3,733 gallons of rainfall for a total accumulated volume of 130,993 gallons.

The floor liner is sloped towards the low-point sumps (DEP-SUMP-00005A and DEP-SUMP-00005B), which are provided with level detection instrumentation and sump pumps (DEP-PMP-00035A and DEP-PMP-00035B) to send the process leak to a non-leaking Process Condensate Lag Storage Vessels (DEP-VSL-00005A or DEP-VSL-00005B). The pumps have a design flow rate of 120 gal/min. The non-leaking vessel is determined by monitoring the vessel level indications in both Process Condensate Lag Storage Vessels and/or by following operational procedures to visually inspect the area. After the maximum volume that can be pumped by the sump pumps has been transferred, the area is manually rinsed and flushed, as needed. The rinse/flush water is then transferred. The residual rinse/flush liquid will be removed through means determined appropriate by operations. If the liquid is rainwater, after the

maximum volume of accumulated liquid has been transferred, manual entry may be required to remove the residual liquid unless being left to evaporate.

5.4 Room E-0103, West Evaporator Process Area

Room E-0103, West Evaporator Process Area, is located in the southwest part of EMF at 0 ft. elevation. It contains the Evaporator Separator (DEP-EVAP-00001), the Evaporator Reboiler (DEP-RBLR-00001), the Evaporator Concentrate/Feed LAW Effluent Cooler (DEP-HX-00001), the Evaporator Feed Vessel discharge pumps (DEP-PMP-00002A/B and DEP-PMP-00012A/B/C), and the Evaporator Concentrate Vessels' discharge pumps (DEP-PMP-00003A/B/C).

A special protective coating liner with water stops provides secondary containment to accommodate the total volume (42,300 gal) of the largest vessel connected to the pumps in the area, the Evaporator Feed Vessel (DEP-VSL-00002), and 13,101 gallons of fire water for a total accumulated volume of 55,401 gallons.

The floor liner is sloped towards the low-point sumps (DEP-SUMP-00002A and DEP-SUMP-00002B), which are provided with level detection instrumentation and sump pumps (DEP-PMP-00032A and DEP-PMP-00032B) to send small process leaks to the Low Point Drain Vessel (DEP-VSL-00001) and large process leaks to one of the Overhead Sampling Vessels (DEP-VSL-00004A or DEP-VSL-00004B). The pumps have a design flow rate of 120 gal/min. The size of the leak is determined by sump level detection until it overflows from the sump. When the sump is overflowing, vessel level indications for the Evaporator Feed Vessel (DEP-VSL-00002) and the Evaporator Concentrate Vessels (DEP-VSL-00003A/B/C) are monitored. If a measurable drop in vessel level is indicated, the leak size can be determined. If there is no measurable change in vessel level, operational procedures are followed to perform a visual inspection of this area to determine the source and size of leak. After the maximum volume that can be pumped by the sump pumps has been transferred, the area is manually rinsed and flushed. The rinse/flush water is then transferred. Residual rinse/flush liquid will remain due to pumping capability and backflow from piping. The residual rinse/flush liquid will be removed through means determined appropriate by operations.

5.5 Room E-0102, East Evaporator Process Area

Room E-0102, East Evaporator Process Area, is located in the southeast part of EMF at 0 ft. elevation. It contains the Evaporator Condensers (DEP-COND-00001/2/3), the Reboiler Condensate Collection Vessel (DEP-VSL-00008), the Steam Condensate Water Blowdown Vessel (SCW-VSL-00054), the Overhead Sampling Vessels' discharge pumps (DEP-PMP-00004A/B/C), and the Process Condensate Lag Storage Vessels' discharge pumps (DEP-PMP-00005A/B and DEP-PMP-00015A/B/C).

A special protective coating liner with water stops provides secondary containment to accommodate the total volume (127,260 gal) of the largest vessel connected to the pumps in the area, the Process Condensate Lag Storage Vessel (DEP-VSL-00005A/B), and 21,913 gallons of fire water for a total accumulated liquid volume of 149,173 gallons.

The floor liner is sloped towards the low-point sumps (DEP-SUMP-00003A and DEP-SUMP-00003B), which are provided with level detection instrumentation and sump pumps (DEP-PMP-00033A and DEP-PMP-00033B) to send the process leak to a non-leaking Process Condensate Lag Storage Vessels (DEP-VSL-00005A or DEP-VSL-00005B). The pumps have a design flow rate of 120 gal/min. The non-

leaking vessel is determined by monitoring the vessel level indications in both Process Condensate Lag Storage Vessels and/or by following operational procedures to visually inspect the Process Condensate Lag Storage Vessel Area. After the maximum volume that can be pumped by the sump pumps has been transferred, the area is manually rinsed and flushed. The rinse/flush water is then transferred. Residual rinse/flush liquid will remain due to pumping capability and backflow from piping. The residual rinse/flush liquid will be removed through means determined appropriate by operations.

5.6 Rooms E-0102 and E-0103, East and West Evaporator Process Areas Combined

In the event that a pump suction line breaks in Room E-0102 or E-0103, there is the potential for liquid to spill into the adjacent room as doors cannot be credited for isolating spills.

A special protective coating liner with water stops provides secondary containment to accommodate the total volume (127,260 gal) of the largest vessel connected to the pumps in either area, the Process Condensate Lag Storage Vessel (DEP-VSL-00005A/B), and 35,014 gallons of fire water across both process areas for a total accumulated liquid volume of 162,274 gallons.

In this scenario, one sump pump (DEP-PMP-00032A/B in the West Evaporator Process Area and DEP-PMP-00033A/B in the East Evaporator Process Area) is operating in each room to remove the contained liquid. The pumps have a design flow rate of 120 gal/min. The fluid in the West Evaporator Process Area sumps are pumped to one of the Overhead Sampling Vessels (DEP-VSL-00004A or DEP-VSL-00004B) and the fluid in the East Evaporator Process Area sumps are pumped to a non-leaking Process Condensate Lag Storage Vessels (DEP-VSP-00005A or DEP-VSL-00005B). The non-leaking vessel is determined by monitoring the vessel level indications in both of the Process Condensate Lag Storage Vessels and/or by following operational procedures to visually inspect the Process Condensate Lag Storage Vessel Area. After the maximum volume that can be pumped by the sump pumps has been transferred, the area is manually rinsed and flushed. The rinse/flush water is then transferred. Residual rinse/flush liquid will remain due to pumping capability and backflow from piping. The residual rinse/flush liquid will be removed through means determined appropriate by operations.

6 Calculations

Waste removal capability is calculated for the containment areas based on information presented in Section 5 using the following equations:

Flow Rate (gal/hr) = Flow Rate (gal/min) x (60 min/hr) (Equation 1)

Time Required to Remove Liquid (hr) = $\frac{Volume}{Pump\ Flow\ Rate}$ (Equation 2)

6.1 Pump Flow Rate Conversion

Flow Rate (gal/hr) = Flow Rate (gal/min) x (60 min/hr) (Equation 1)

DEP-PMP-00031 flow rate = $45\frac{gal}{min} \times \frac{60\ min}{hr} = 2700\frac{gal}{hr}$

All other pump flow rate = $120\frac{gal}{min} \times \frac{60\ min}{hr} = 7200\frac{gal}{hr}$

6.2 Room ED-B001, Low Point Drain Vessel Area

Liquid Source	Total Volume (Section 5)	DEP-PMP-00031 Flow Rate (Section 6.1)	Time Required to Remove Liquid (Equation 2)
DEP-VSL-00001	18,000 gal	2,700 gal/hr	6.7 hours
Fire Water	3,456 gal	2,700 gal/hr	1.3 hours
Rainfall	Not Applicable		
Accumulated Liquid	**21,456 gal**	**2,700 gal/hr**	**8.0 hours**

The requirement for removing accumulated liquid within twenty-four hours is met considering 8.0 hours is required for the sump pump to remove the total accumulated liquid and operator response time (Assumption 4.2) is not anticipated to require more than the remaining time.

6.3 Room E-0105, Evaporator Feed Vessel Area

Liquid Source	Total Volume (Section 5)	DEP-PMP-00034A/B Flow Rate (Section 6.1)	Time Required to Remove Liquid (Equation 2)
DEP-VSL-00002	42,300 gal	7,200 gal/hr	5.9 hours
Fire Water	Not Applicable		
Rainfall	1,728 gal	7,200 gal/hr	0.3 hours
Accumulated Liquid	**44,028 gal**	**7,200 gal/hr**	**6.2 hours**

The requirement for removing accumulated liquid within twenty-four hours is met considering 17.8 hours is required for the sump pump to remove the total accumulated liquid and operator response time (Assumption 4.2) is not anticipated to require more than the remaining time.

6.4 Room E-0106, Process Condensate Lag Storage Vessel Area

Liquid Source	Total Volume (Section 5)	DEP-PMP-00035A/B Flow Rate (Section 6.1)	Time Required to Remove Liquid (Equation 2)
DEP-VSL-00005A/B	127,260 gal	7,200 gal/hr	17.7 hours
Fire Water	Not Applicable		
Rainfall	3,733 gal	7,200 gal/hr	0.5 hours
Accumulated Liquid	**130,993 gal**	**7,200 gal/hr**	**18.2 hours**

The requirement for removing accumulated liquid within twenty-four hours is met considering 5.8 hours is required for the sump pump to remove the total accumulated liquid and operator response time (Assumption 4.2) is not anticipated to require more than the remaining time.

6.5 Room E-0103, West Evaporator Process Vessel Area

Liquid Source	Total Volume (Section 5)	DEP-PMP-00032A/B Flow Rate (Section 6.1)	Time Required to Remove Liquid (Equation 2)
DEP-VSL-00002	42,300 gal	7,200 gal/hr	5.9 hours
Fire Water	13,101 gal	7,200 gal/hr	1.8 hours
Rainfall	Not Applicable		
Accumulated Liquid	**55,401 gal**	**7,200 gal/hr**	**7.7 hours**

The requirement for removing accumulated liquid within twenty-four hours is met considering only 16.3 hours is required for the sump pump to remove the total accumulated liquid and operator response time (Assumption 4.2) is not anticipated to require more than the remaining time.

6.6 Room E-0102, East Evaporator Process Vessel Area

Liquid Source	Total Volume (Section 5)	DEP-PMP-00033A/B Flow Rate (Section 6.1)	Time Required to Remove Liquid (Equation 2)
DEP-VSL-00005A/B	127,260 gal	7,200 gal/hr	17.7 hours
Fire Water	21,913 gal	7,200 gal/hr	3.0 hours
Rainfall	Not Applicable		
Accumulated Liquid	**149,173 gal**	**7,200 gal/hr**	**20.7 hours**

The requirement for removing accumulated liquid within twenty-four hours is met considering 3.3 hours is required for the sump pump to remove the total accumulated liquid and operator response time (Assumption 4.2) is not anticipated to require more than the remaining time.

6.7 Rooms E-0102 and E-0103, East and West Evaporator Process Areas Combined

Liquid Source	Total Volume (Section 5)	DEP-PMP-00032A/B and DEP-PM-00033A/B Flow Rate Combined (Section 6.1)	Time Required to Remove Liquid (Equation 2)
DEP-VSL-00005A/B	127,260 gal	14,400 gal/hr	8.8 hours
Fire Water	35,014 gal	14,400 gal/hr	2.4 hours
Rainfall	Not Applicable		
Accumulated Liquid	**162,274 gal**	**14,400 gal/hr**	**11.2 hours**

The requirement for removing accumulated liquid within twenty-four hours is not challenged considering only 12.8 hours is required for the sump pump to remove the total accumulated liquid and operator response time is not anticipated to require more than the remaining time (Assumption 4.2).

7 Waste and Accumulated Liquid Removal Rates

Containment Area Elevation (ft)	Containment Area Room Number	Sump(s)	Sump Pump(s)	Sump Pump Flow Rate (gal/min)	Sump Pump Flow Rate (gal/hr)	Largest Vessel in Containment Area (Vessel Number)	Total Vessel Volume (gal)	Time Required to Remove Vessel Volume (hr)	Fire Water Volume (gal)	Time Required to Remove Fire Water (hr)	Rainfall Volume (gal)	Time Required to Remove Rainfall (hr)	Total Accumulated Volume (gal)	Time Required to Remove Total Accumulated Volume (hr)
-39	ED-B001 (Low Point Drain Vessel Area)	DEP-SUMP-00001	DEP-PMP-00031	45	2,700	DEP-VSL-00001	18,000	6.7	3,456	1.3	Not Applicable. Rainfall is not accumulated in indoor areas.		21,456	8.0
0	E-0105 (Evaporator Feed Vessel Area)	DEP-SUMP-00004A/B	DEP-PMP-00034A/B	120	7,200	DEP-VSL-00002	42,300	5.9	Not Applicable. Fire water is not accumulated in outdoor areas.		1,728	0.3	44,028	6.2
0	E-0106 (Process Condensate Lag Storage Vessel Area)	DEP-SUMP-00005A/B	DEP-PMP-00035A/B	120	7,200	DEP-VSL-00005A/B	127,260	17.7			3,733	0.6	130,993	18.2
0	E-0103 (West Evaporator Process Area)	DEP-SUMP-00002A/B	DEP-PMP-00032A/B	120	7,200	DEP-VSL-00002	42,300	5.9	13,101	1.9	Not Applicable. Rainfall is not accumulated in indoor areas.		55,401	7.7
0	E-0102 (East Evaporator Process Area)	DEP-SUMP-00003A/B	DEP-PMP-00033A/B	120	7,200	DEP-VSL-00005A/B	127,260	17.7	21,913	3.1			149,173	20.7
0	E-0102/E-0103 (East and West Evaporator Process Areas)	DEP-SUMP-00002A/B and DEP-SUMP-00003A/B	DEP-PMP-00032A/B and DEP-PMP-00033A/B	120 x 2	14,400	DEP-VSL-00005A/B	127,260	8.9	35,014	2.5			162,274	11.2

8 References

8.1 Washington Administrative Code, December 18, 2014, Title 173 Chapter 303

8.2 WA 7890008967, Waste Treatment & Immobilization Plant Operating Unit Group 10 (OUG-10), Part III

8.3 24590-BOF-P1-25-00001, Rev. 0, Balance of Facilities LAW Effluent Process Bldg & LAW Effluent Drain Tank Bldg General Arrangement Plan at Elev. 0'-0".

8.4 24590-BOF-M6C-DEP-00001, Rev. A, DEP Sump, Sump Pump and Pipeline Sizing

8.5 24590-BOF-PER-M-16-003, Rev. 0, Dangerous Waste Permit (DWP) Liner Heights in the Effluent Management Facility (EMF)

8.6 24590-WTP-DB-ENG-01-001, Rev. 3, Basis of Design

Issued by
RPP-WTP PDC

Prevention of Hydrogen Accumulation in WTP Tank Systems and Miscellaneous Treatment Unit Systems

Document title:

Document number: 24590-WTP-PER-PR-03-001, Rev 2

Contract number: DE-AC27-01RV14136

Department: Engineering

Author(s): Seth Schreiber

Checked by: William Hix

Issue status: Issued for Permitting Use

Approved by: Eric Slaathaug

Approver's position: Process Functional Engineering Manager

Approver's signature: _____ 10/27/2016

Signature *Date*

River Protection Project
Waste Treatment Plant
2435 Stevens Center Place
Richland, WA 99354
United States of America
Tel: 509 371 2000

Notice

Please note that source, special nuclear, and byproduct materials, as defined in the Atomic Energy Act of 1954 (AEA), are regulated at the US Department of Energy (DOE) facilities exclusively by DOE acting pursuant to its AEA authority. DOE asserts, that pursuant to the AEA, it has sole and exclusive responsibility and authority to regulate source, special nuclear, and byproduct materials at DOE-owned nuclear facilities. Information contained herein on radionuclides is provided for process description purposes only.

History Sheet

Rev	Reason for revision	Revised by
0	Issued for Permitting use.	R. Peters
1	Issued for Permitting use & addressed DOE comments.	R. Peters
2	Issued for Permitting use & revised in its entirety to include Direct Feed LAW Operations	S. Schreiber

Contents

Notice ii

History Sheet iii

Acronyms v

1 Background 1

2 References 2

3 Scope 3

4 Potential Control Strategies for Preventing Hydrogen Accumulation 4

4.1 Controls 4

4.2 System/Piping Design Features 5

4.3 Secondary Containment 5

5 Process Vessels 6

5.1 PTF 6

5.2 HLW 6

5.3 LAW 6

5.4 LAB 7

5.5 BOF 7

6 Summary 8

6.1 Functional Requirements 8

6.2 Process Vessels 9

Acronyms

AEA	**Atomic Energy Act of 1954**
ASME	**American Society of Mechanical Engineers**
BEU	**beyond extremely unlikely**
BOF	**Balance of Facilities**
DBE	**design basis event**
DFLAW	**Direct Feed LAW**
DOE	**US Department of Energy**
DWP	**Dangerous Waste Permit**
EMF	**Effluent Management Facility**
HLW	**High-Level Waste Facility**
LAB	**Analytical Laboratory Facility**
LAW	**Low-Activity Waste Facility**
LEL	**lower explosive limit**
LFL	**lower flammability limit**
MU	**miscellaneous unit**
PDSA	**Preliminary Documented Safety Analysis**
PJM	**pulse jet mixer**
PSA	**plant service air**
PTF	**Pretreatment Facility**
SSCs	**structures, systems, and components**
UBC	**Uniform Building Code**
WAC	**Washington Administrative Code**
WTP	**Hanford Tank Waste Treatment and Immobilization Plant**

1 Background

The Hanford Tank Waste Treatment and Immobilization Plant (WTP) is a complex of radioactive waste treatment processing facilities designed and constructed to process, or vitirify, the Hanford Site tank waste into a stable glass form. The Hanford Site tank waste consists of approximately 54 million gallons of mixed hazardous waste stored in underground storage tanks at the Hanford Site. The tank waste includes solids (sludge), liquids (supernatant), and salt cake (dried salts that will dissolve in water, forming supernatant).

The Washington Administrative Code (WAC) 173-303-340 requires that "Facilities must be designed, constructed, maintained and operated to minimize the possibility of fire, explosion, or any unplanned sudden or nonsudden release of dangerous waste or dangerous waste constituents to air, soil, or surface or ground water which could threaten the public health or the environment."

The current WTP Dangerous Waste Permit (DWP) conditions are more specific and, in summary, state that, "Tank systems that have the potential for formation and accumulation of hydrogen gases must be operated to maintain hydrogen levels below the lower explosive limit." (Reference 2.2, III.10.E.5.l)

This document describes the design and operating features that prevent hydrogen concentrations from exceeding the lower flammability limit (LFL)[1]. The following conditions of the DWP will be addressed in this document:

- Secondary containment and leak detection systems. DWP Conditions: III.10.E.9.b.viii, III.10.G.10.b.viii, III.10.H.5.b.viii, III.10.J.5.b.viii)
- Tanks/miscellaneous units
  (DWP Conditions: III.10.E.9.c.xi, III.10.G.10.c.x, III.10.G.10.d.xii)
- Ancillary equipment
  (DWP Conditions: III.10.E.9.d.xii)
- Sub-Systems
  (DWP Conditions:, III.10.H.5.c.xii, III.10.H.5.d.xii, III.10.J.5.c.xii, III.10.J.5.d.xii)

These requirements apply to process vessels in the Pretreatment Facility (PTF), High Level Waste Facility (HLW), Low-Activity Waste Facility (LAW) including the Effluent Management Facility (EMF), Analytical Laboratory Facility (LAB), and Balance of Facilities (BOF). Throughout this document the term process vessels includes tanks, vessels, miscellaneous units (MU), secondary containment/leak detection systems, sub-systems, and ancillary equipment, such as piping and other in-line components. PTF and HLW are undergoing redesign activities so the information in sections for PTF and HLW has been removed and the sections are listed as RESERVED and will be updated in a future revision.

[1] Lower explosive limit (LEL) and LFL are different terms for the same concept. The term LFL is used throughout this document.

2 References

2.1 WAC 173-303, *Dangerous Waste Regulations*, 12/18/14.

2.2 WA7890008967, *Dangerous Waste Portion of the Hanford Facility Resource Conservation and Recovery Act Permit for the Treatment, Storage, and Disposal of Dangerous Waste*, Revision 8C, Part III, Operating Unit Group 10, Waste Treatment and Immobilization Plant.

2.3 24590-WTP-M4C-V11T-00011, Revised *Calculation of Hydrogen Generation Rates and Times to Lower Flammability Limit for WTP*, Revision C.

2.4 *(*RESERVED*)*

2.5 *(*RESERVED*)*

2.6 24590-WTP-PSAR-ESH-01-002-03, *Preliminary Documented Safety Analysis to Support Construction Authorization; LAW Facility Specific Information*, Revision 6A.

2.7 24590-WTP-PSAR-ESH-01-002-06, *Preliminary Documented Safety Analysis to Support Construction Authorization; LAB Facility Specific Information*, Revision 5.

2.8 24590-WTP-PSAR-ESH-01-002-01, *Preliminary Documented Safety Analysis to Support Construction Authorization; General* Information, Revision 6A.

2.9 24590-WTP-SRD-ESH-01-001-02, *Safety Requirements Document Volume II*, Revision 7F.

2.10 24590-BOF-M4C-V11T-00003, *Calculation of Hydrogen Generation Rates and Times to Low Flammability Limit for EMF*, Revision A.

3 Scope

This document explains which facilities are affected by hydrogen gas, where hydrogen gas comes from, why it is a problem, the types of equipment at risk, and the design and operating features that prevent hydrogen gas from causing a release of dangerous waste to the environment. Information in this document applies to WTP systems that manage dangerous waste and also have the potential for the formation and accumulation of hydrogen gases during normal operation. This information does not necessarily include post-design basis events (DBE). Such systems include permitted tank and miscellaneous systems that contain tank waste from tank farms, but not vitrified waste. It also does not include offgas treatment equipment as both LAW and HLW continuously remove generated gases at levels below the hydrogen LFL.

WTP consists of the following five major facilities:

- High-Level Waste (HLW)
- Low-Activity Waste (LAW), including the Effluent Management Facility (EMF)[2]
- Pretreatment (PTF)
- Analytical Laboratory (LAB)
- Balance of Facilities (BOF)

All of the above major facilities, with the exception of BOF, manage waste and use equipment that has the potential for the formation and accumulation of hydrogen gas.

The processing of radioactive mixed dangerous waste results in hydrogen generation by several mechanisms including the following:

- Radiolysis of water. This can be viewed as radiation breaking apart a water molecule (H_2O), to form hydrogen (H_2), and oxygen (O_2) gasses.
- Radiolysis of organic compounds dissolved in the liquid. This can be viewed as radiation breaking apart organic molecules (e.g. HEDTA [$C_{10}H_{16}O_8N_2$]), to form e.g. hydrogen (H_2), carbon dioxide (CO_2), and oxygen (O_2) gasses.
- Thermolysis. Thermolysis can be viewed as thermal heat, breaking apart organic molecules, and forming hydrogen as a by-product.

The hydrogen gas naturally evolves from the waste in the vessels, ancillary vessels and piping, creating a flammable gas hazard that could, under certain circumstances result in a “hydrogen event.” A hydrogen event is one where a deflagration, detonation, or similar event occurs after hydrogen gas levels exceed the LFL, in conjunction with other necessary conditions. A hydrogen event of sufficient magnitude could potentially cause equipment failure and release dangerous waste to secondary containment or the environment.

[2]Although EMF is permitted as a stand-alone facility and design documentation carries a BOF designator, it is described in this document in LAW subsections because it is included in the LAW Preliminary Documented Safety Analysis (PDSA).

Section 4 describes the features for facilities in which design is complete (LAW and LAB) and operating requirements for other facilities (HLW, PTF, and BOF) used at WTP to prevent a hydrogen event. The design for EMF is not yet complete.

4 Potential Control Strategies for Preventing Hydrogen Accumulation

To comply with WAC 173-303 (Reference 2.1), the requirements discussed in the following sections will be implemented. Throughout this section, potential strategies for controlling accumulation of hydrogen will be identified. The following criteria and strategies are the major elements for designing or mitigating the potential for hydrogen events and are supported by Engineering analysis for each major facility.

4.1 Controls

Hydrogen accumulation is minimized by either limiting the time that hydrogen can accumulate or limiting the amount of hydrogen that can accumulate. The time to accumulate is limited by process parameters such as the amount of time between transfers. The amount of hydrogen is controlled by either air flow to remove the hydrogen (i.e. vessel ventilation) or by mixing to prevent large releases of hydrogen within a vessel (i.e. pulse jet mixers [PJMs] and/or spargers).

The process vessels that require controls for hydrogen removal (typically tanks, vessels, and MU) will have mixing systems, purging, and/or dilution to prevent exceeding the LFL. In addition, the liquid level will be monitored to stay within normal operating range, thus maintaining an appropriate headspace volume that will prevent exceeding the LFL.

4.1.1 Mixing to Release Hydrogen

RESERVED for PTF/HLW.

LAW, LAB, EMF, and BOF have not identified any vessels that require mixing to release hydrogen.

4.1.2 Headspace Ventilation and Purge

Ventilation removes hydrogen gas before it reaches concentrations that could cause a hydrogen event by continuously drawing gases from the headspace of vessels through the vessel ventilation system. In addition to venting, some vessels also use purging where air is added to the headspace of the vessel. Headspace purging is typically accomplished in the LAW vessels identified requiring headspace dilution using plant service air (PSA) purge flow set with flow restriction devices to provide required flow (Reference 2.6, Page 3.3-5) or, in the case of EMF, passive purge air flow where air is drawn from the building through the vessel by the exhaust fans (Reference 2.10, Page 20). The purge will have a minimum volumetric air flow rate of 100 times the maximum calculated hydrogen generation rate of each vessel to maintain a steady-state hydrogen concentration in the headspace lower than 25% of the LFL (which is 1.0 vol.%) (Reference 2.3, Page 23). The purge air flow will be adequate to provide for the hydrogen generation rate at the maximum sustained operating temperature of the waste contained in the vessel.

4.1.3 Headspace Volume

Vessel headspace volume will be adequate to ensure that the relationship between hydrogen generation rate and constant purge flow rate maintains the hydrogen concentration less than 25% of the LFL during normal operations. The headspace used in calculating times to LFL is assumed to be above the overflow level, however during normal operation, additional vessel headspace is maintained by ensuring liquid level is below the maximum operating level through monitoring and interlocks. The amount of vessel headspace can be compromised through allowing the vessel level to rise too far. The vessel liquid level will be monitored with instrumentation. The level monitors are also used to determine which air spargers will be activated.

4.1.4 Flushing

Following waste transfers, the system is capable of being drained and flushed to minimize the buildup of waste material that could lead to plugging, thereby reducing the potential to produce and trap hydrogen.

4.2 System/Piping Design Features

It is important to design systems and piping such that the amount of waste that may become stagnant is minimized. This prevents pockets of waste from collecting, thus preventing hydrogen from being generated in the system. To that end, several design features should be considered for designs which have not been completed:

- Systems or portions of systems are designed to be self-draining.
- High points in process systems are avoided.
- Process lines filled with waste are designed so that they may be flushed or drained.
- Dead legs (where waste can remain stagnant during operations) are minimized.
- Higher schedule piping is used whenever possible since higher schedule piping can withstand significantly higher strains.
- Melter engineered in-leakage.

4.3 Secondary Containment

Secondary containment may include the process cells and sumps, pump and valve pits, double wall piping, feed line encasement assemblies, and encasement pipes of the transfer lines. Leak detection systems include the secondary containment sumps and transfer line leak detection system.

Hydrogen is not likely to accumulate in secondary containment because process vessels containing hydrogen generating waste are designed to maintain structural integrity during off-normal events and mitigate hydrogen accumulation during normal process operation through the vessel vent systems. Furthermore, the process vessels are designed for the removal of spilled waste and flushing of secondary containment in the event of a leak.

In the unlikely event that a vessel fails and vessel contents are released into secondary containment, the vessel contents will be dispersed over a broad area. This prevents hydrogen from being trapped to such a depth that it could result in accumulation in a solids layer that leads to an episodic release. The building ventilation systems provide a continuous air flow through the cell. In the case of a vessel spilling contents into the cell, this air flow provides dilution and mitigation of hydrogen.

5 Process Vessels

The process vessels listed in Section 5 require hydrogen purging and dilution to prevent hydrogen buildup. Hydrogen mitigation strategies were selected based on either the time to reach the LFL following a loss of hydrogen purging or the amount of suspended solids in the vessel contents that might trap and later release hydrogen gas.

All of the identified LAW, EMF, and LAB vessels have normal air purge, dilution, and/or mixing using components supplied with instrument air, plant air, or passive flow. In addition, the hydrogen mitigation purge and mixing structures, systems and components (SSCs) prevent hydrogen buildup in process vessels and other equipment to levels in excess of the LFL.

Newtonian fluids can release any generated hydrogen in a steady state manner since the shear stress of these fluids allow small bubbles of hydrogen to rise to the top of the vessel as they are generated.

5.1 PTF

RESERVED.

5.2 HLW

RESERVED.

5.3 LAW

LAW can be operated in two configurations. The normal configuration utilizes vessels in PTF. The second configuration (Direct Feed LAW [DFLAW]) also utilizes vessels in the EMF. Both operational configurations are described in the LAW PDSA.

5.3.1 Hydrogen Accumulation Prevention

For flammable gas accumulation using the normal LAW configuration, the hydrogen accumulation prevention strategy is to provide an adequate air purge through the vessels of concern (RLD-VSL-00004, LCP-VSL-00001/00002 and LFP-VSL-00001/2/3/4). The PSA purge of these vessels provides this function, in conjunction with instrumentation to monitor purge airflows to each vessel and alarm on low flow conditions. There are no engineered components for hydrogen mitigation in the primary and secondary offgas system MUs because air dilution prevents the generation of flammable gas to concentrations that exceed the LFL. (Reference 2.6, Sections 3.3.3.1 and 3.3.3.5)

For flammable gas accumulation using the DFLAW configuration, in addition to the vessels described for LAW above, the hydrogen accumulation prevention strategy in the EMF is to provide an adequate passive air purge through the vessels of concern (DEP-VSL-00001, DEP-VSL-00002, DEP-VSL-0003A/B/C, DEP-VSL-00004A/B, DEP-VSL-00005A/B, and DEP-EVAP-00001) (Reference 2.6, Pages B3-11 and B3-123).

A flow restriction device in the PSA header limits the maximum flow to those vessels supplied with PSA for hydrogen mitigation. This serves to protect the function of the melter offgas system to confine offgas and direct flows to the exhaust stack. (Reference 2.6, Section 2.9.7)

5.3.2 Functional Requirements

The functional requirements for the hydrogen mitigation purge system are to maintain the hydrogen concentrations in the vessel headspaces and lines to less than 1 % by volume hydrogen (25 percent of the LFL) during normal operations (Reference 2.9, Page C-141).

5.3.3 Air Supply SSCs

5.3.3.1 Plant Service Air Header Flow Restriction Device

The function of the plant service air header flow restriction device is to limit the maximum purge flowrate to the LAW vessels receiving plant service air for hydrogen mitigation. This serves to protect the melter offgas system to confine offgas and direct flows to the exhaust stack.

5.3.3.2 Functional Requirements

The flow restriction device is designed such that it limits the flowrate to the LAW vessels receiving plant service air to a predetermined level that ensures that melter offgas confinement is not compromised during normal, abnormal, and accident conditions.

5.3.3.3 Standards

The flow restriction device will be designed in accordance with American Society of Mechanical Engineers (ASME B31.3). The Uniform Building Code (UBC) applies to the flow restriction device to ensure that it can provide its safety function throughout applicable natural phenomena hazards.

5.4 LAB

5.4.1 Hydrogen Accumulation Prevention

A hydrogen event in LAB could occur from the possible accumulation of hydrogen in the C5 vessel (RLD-VSL-00165) but is considered Beyond Extremely Unlikely (BEU) because the time to reach the LFL is extremely long (Reference 2.7, Section 3.3.3.7) and the vessel headspace is vented to the C5 ventilation system. To protect an initial condition assumption in the calculation of the time to reach the LFL, administrative controls for hotcell drain collection vessel (RLD-VSL-00165) inventory limits are adopted (Reference 2.7, Section 3.3.3.7). The risk of a hydrogen event is minimized by limiting the allowable inventory in the vessel and, thus, increasing the time to reach the LFL. During DFLAW operation this vessel is not in use.

5.4.2 Functional Requirements

The functional requirements for the hydrogen mitigation purge system are to maintain the hydrogen concentrations in the vessel headspaces and lines to less than 1 % by volume hydrogen (25 percent of the LFL) during normal operations (Reference 2.9, Page C-141).

5.5 BOF

The BOF is primarily comprised of facilities that supply chemical and process services, and provides infrastructure support services and utilities for the WTP site (Reference 2.8, Page ES-2. It will also include a failed melter storage area. During normal operation, none of its facilities include equipment that is permitted and has the potential for the formation and accumulation of hydrogen gas.

6 Summary

Implementation of these requirements ensure WTP facilities are "designed, constructed, maintained and operated to minimize the possibility of fire, explosion, or any unplanned sudden or non-sudden release of dangerous waste or dangerous waste constituents to air, soil, or surface or ground water which could threaten the public health or the environment."

PTF and HLW are undergoing redesign activities so the information in sections for PTF and HLW has been removed and the sections are listed as RESERVED and will be updated in a future revision.

6.1 Functional Requirements

To demonstrate compliance with WAC 173-303 (Reference 2.1) the requirements discussed below and in the following sections will be implemented, which includes revising the existing WTP DWP (Reference 2.2). Throughout this document, control strategies are identified for controlling accumulation of hydrogen. The following criteria and strategies are the major elements for designing or mitigating the potential for hydrogen events and are supported by Engineering analysis for each facility:

1. Hydrogen Generation Rate
    a. Calculations will show the maximum hydrogen generation rate for vessels (Reference 2.3 and Reference 2.10)
2. Controls (Section 4.1)
    a. Mixing to Release Hydrogen (Section 4.1.1) - RESERVED
    b. Headspace Ventilation and Purge (Section 4.1.2) - Hydrogen concentrations in the vessel headspace will be maintained below 1 % by volume (25 % of the LFL) during normal operations.
    c. Headspace Volume (Section 4.1.3) - To support solids mixing and vessel headspace purge strategies, the vessel headspace will maintain an adequate volume to ensure hydrogen purge can occur within the calculated time to reach LFL concentrations.
    d. Flushing (Section 4.1.4) - Following waste transfers, the system is capable of being drained and flushed after each use to minimize the buildup of waste material, thereby reducing the potential to produce hydrogen.
3. System/Piping Design Features (Section 4.2) - It is important to design systems and piping such that the amount of waste that may become stagnant is minimized. This prevents pockets of waste from collecting, thus preventing hydrogen from being generated in the system or piping.
4. Secondary Containment (Section 4.3) - In the unlikely event that a vessel fails and vessel contents are released into secondary containment, the vessel contents will be dispersed over a broad area. This prevents hydrogen from being trapped and thus avoids hydrogen accumulation. The building ventilation systems provide a continuous air flow through the cell. In the case of a vessel spilling contents into the cell, this air flow provides dilution and mitigation of hydrogen.

6.2 Process Vessels

As described in Section 5, the mitigating features of the process vessels and MUs in secondary containment, facility tank systems, and MU system equipment prevent hydrogen accumulation, thus alleviating a potential hazard.

The LAB and BOF process vessels do not possess controls that serve the purpose of mitigating hydrogen due to the fact that the contents contained in these units are not expected to generate hydrogen gas. However, they do utilize passive purge and follow the same aspects of design related to component design, such as double contained pipe monitoring, pipe slopes, flush lines, etc.

EFFLUENT MANAGEMENT FACILITY PROCESS FLOW DIAGRAMS PROCESS STREAM INFORMATION - SYSTEM DEP (2/2)

STREAM NUMBER		DEP10	DEP11	DEP11a	DEP11c	DEP12	DEP13	DEP13c	DEP13d	DEP13e	DEP13f	DEP13g	DEP13h	DEP19	DEP19a	DEP19b	DEP19c	DEP19d	DEP20	DEP20a	DEP20b	DEP20c	DEP20d	DEP20e	DEP20f	DEP21	DEP22	DEP23
FLOW TYPE		BATCH	BATCH	BATCH	BATCH	BATCH	BATCH	BATCH	BATCH	BATCH	CONTINUOUS	BATCH	BATCH	CONTINUOUS	CONTINUOUS	CONTINUOUS	CONTINUOUS	CONTINUOUS	BATCH	CONTINUOUS	BATCH	BATCH	BATCH	BATCH	BATCH	CONTINUOUS	CONTINUOUS	CONTINUOUS
NOTES		4,10,17	18	18	18	19	1,12	3,7,8	4,7,8	4,10	2,6	4,7,8	5,11	9,20	9,21	9,21	9,22	9,22	1	2,6	7,13	4,7,13	14	3,8	4	9,15	16	16
PHASE		LIQUID	LIQUID	LIQUID	LIQUID	LIQUID	LIQUID	LIQUID	LIQUID	LIQUID	LIQUID	LIQUID	LIQUID	VAPOR	VAPOR	VAPOR	VAPOR	VAPOR	LIQUID	LIQUID	LIQUID	LIQUID	LIQUID	LIQUID	LIQUID	VAPOR	VAPOR	VAPOR
NOMINAL FLOW RATE	GPM (LB/HR)	0	TBD	TBD	TBD	TBD	88	0	0	0	TBD	0	0	TBD	TBD	TBD	(300)	(152.3)	TBD	TBD	0	0	0	0	0	TBD	(300)	(152.3)
MAXIMUM FLOW RATE	GPM (LB/HR)	TBD	TBD	TBD	TBD	TBD	88	TBD	TBD	TBD	N/A	TBD	N/A	TBD	TBD	TBD	TBD	TBD	170	N/A	TBD	TBD	170	170	90	TBD	TBD	TBD
MINIMUM TEMPERATURE	°F	60	40	40	40	TBD	40	-	-	TBD	40	-	40	TBD	TBD	TBD	TBD	TBD	40	40	40	40	40	-	40	59	-	-
NOMINAL TEMERATURE	°F	TBD	TBD	TBD	TBD	TBD	116	-	-	TBD	116	-	115	TBD	TBD	TBD	TBD	TBD	115	115	115	115	115	-	115	N/A	358	358
MAXIMUM TEMPERATURE	°F	TBD	TBD	TBD	TBD	TBD	139	-	-	95	150	-	126	TBD	TBD	TBD	TBD	TBD	120	126	126	126	126	-	120	113	-	-
OPERATING PRESSURE	PSIG	TBD	TBD	TBD	TBD	TBD	TBD	TBD	TBD	TBD	TBD	TBD	TBD	TBD	TBD	TBD	TBD	TBD	TBD	TBD	TBD	TBD	TBD	TBD	TBD	TBD	135	135
MINIMUM DENSITY	LB/CU. FT	TBD	TBD	TBD	TBD	TBD	61.4	-	-	TBD	61.2	-	61.6	TBD	TBD	TBD	TBD	TBD	61.7	61.6	61.6	61.6	61.6	-	61.7	-	-	-
NOMINAL DENSITY	LB/CU. FT	TBD	TBD	TBD	TBD	TBD	68.7	-	-	TBD	68.7	-	63.5	TBD	TBD	TBD	TBD	TBD	63.5	63.5	63.5	63.5	63.5	-	63.5	-	-	-
MAXIMUM DENSITY	LB/CU. FT	TBD	TBD	TBD	TBD	TBD	84.3	-	-	TBD	84.3	-	65.8	TBD	TBD	TBD	TBD	TBD	65.8	65.8	65.8	65.8	65.8	-	65.8	-	-	-
MINIMUM VISCOSITY	cP	TBD	TBD	TBD	TBD	TBD	0.5	-	-	TBD	0.4	-	0.5	TBD	TBD	TBD	TBD	TBD	0.6	0.5	0.5	0.5	0.5	-	0.6	-	-	-
NOMINAL VISCOSITY	cP	TBD	TBD	TBD	TBD	TBD	1.0	-	-	TBD	1.0	-	0.6	TBD	TBD	TBD	TBD	TBD	0.6	0.6	0.6	0.6	0.6	-	0.6	-	-	-
MAXIMUM VISCOSITY	cP	TBD	TBD	TBD	TBD	TBD	15.0	-	-	TBD	15.0	-	1.6	TBD	TBD	TBD	TBD	TBD	1.6	1.6	1.6	1.6	1.6	-	1.6	-	-	-
REFERENCES		1	1	1		5	1,2,4,8				1,2,4		1,2,3	1,2					1,2,3,9	1,2,3	1,2,3	1,2,3	1,2,3	3	1,2,3,9	7	6,7	6,7
AVG CHEMICAL CONC																												
H2O	WT%	60.0%	82.0%	82.0%	82.0%	TBD	82.3%	-	-	TBD	82.3%	-	99.8%	100.0%	100.0%	100.0%	100.0%	100.0%	99.8%	99.8%	99.8%	99.8%	99.8%	-	99.8%	-	100.0%	100.0%
CATIONS	PPM (MASS)																											
Al+3		TBD	TBD	TBD	TBD	TBD	1671	-	-	TBD	1671	-	0	0	TBD	TBD	TBD	TBD	0	0	0	0	0	-	0	-	-	-
B+3		TBD	TBD	TBD	TBD	TBD	5077	-	-	TBD	5077	-	0	0	TBD	TBD	TBD	TBD	0	0	0	0	0	-	0	-	-	-
Ca+2		TBD	TBD	TBD	TBD	TBD	1244	-	-	TBD	1244	-	0	0	TBD	TBD	TBD	TBD	0	0	0	0	0	-	0	-	-	-
Ce+4		TBD	TBD	TBD	TBD	TBD	18	-	-	TBD	18	-	0	0	TBD	TBD	TBD	TBD	0	0	0	0	0	-	0	-	-	-
Cr+3		TBD	TBD	TBD	TBD	TBD	106	-	-	TBD	106	-	0	0	TBD	TBD	TBD	TBD	0	0	0	0	0	-	0	-	-	-
Cr+6		TBD	TBD	TBD	TBD	TBD	664	-	-	TBD	664	-	0	0	TBD	TBD	TBD	TBD	0	0	0	0	0	-	0	-	-	-
Fe+3		TBD	TBD	TBD	TBD	TBD	1575	-	-	TBD	1575	-	0	0	TBD	TBD	TBD	TBD	0	0	0	0	0	-	0	-	-	-
K+		TBD	TBD	TBD	TBD	TBD	2272	-	-	TBD	2272	-	0	0	TBD	TBD	TBD	TBD	0	0	0	0	0	-	0	-	-	-
Li+		TBD	TBD	TBD	TBD	TBD	3114	-	-	TBD	3114	-	0	0	TBD	TBD	TBD	TBD	0	0	0	0	0	-	0	-	-	-
Mg+2		TBD	TBD	TBD	TBD	TBD	32	-	-	TBD	32	-	0	0	TBD	TBD	TBD	TBD	0	0	0	0	0	-	0	-	-	-
Na+		TBD	TBD	TBD	TBD	TBD	49370	-	-	TBD	49370	-	759	0	TBD	TBD	TBD	TBD	759	759	759	759	759	-	759	-	-	-
Ni+2		TBD	TBD	TBD	TBD	TBD	20	-	-	TBD	20	-	0	0	TBD	TBD	TBD	TBD	0	0	0	0	0	-	0	-	-	-
Se+4		TBD	TBD	TBD	TBD	TBD	43	-	-	TBD	43	-	0	0	TBD	TBD	TBD	TBD	0	0	0	0	0	-	0	-	-	-
Si+4		TBD	TBD	TBD	TBD	TBD	3593	-	-	TBD	3593	-	0	0	TBD	TBD	TBD	TBD	0	0	0	0	0	-	0	-	-	-
Ti+4		TBD	TBD	TBD	TBD	TBD	547	-	-	TBD	547	-	0	0	TBD	TBD	TBD	TBD	0	0	0	0	0	-	0	-	-	-
Tl+5		TBD	TBD	TBD	TBD	TBD	29	-	-	TBD	29	-	0	0	TBD	TBD	TBD	TBD	0	0	0	0	0	-	0	-	-	-
Zn+2		TBD	TBD	TBD	TBD	TBD	1758	-	-	TBD	1758	-	0	0	TBD	TBD	TBD	TBD	0	0	0	0	0	-	0	-	-	-
Zr+4		TBD	TBD	TBD	TBD	TBD	103	-	-	TBD	103	-	0	0	TBD	TBD	TBD	TBD	0	0	0	0	0	-	0	-	-	-
ANIONS	PPM (MASS)																											
B(OH)4-		TBD	TBD	TBD	TBD	TBD	155	-	-	TBD	155	-	0	0	TBD	TBD	TBD	TBD	0	0	0	0	0	-	0	-	-	-
C2O4-2		TBD	TBD	TBD	TBD	TBD	110	-	-	TBD	110	-	0	0	TBD	TBD	TBD	TBD	0	0	0	0	0	-	0	-	-	-
Cl-		TBD	TBD	TBD	TBD	TBD	19385	-	-	TBD	19385	-	4	3	TBD	TBD	TBD	TBD	4	4	4	4	4	-	4	-	-	-
CO3-2		TBD	TBD	TBD	TBD	TBD	714	-	-	TBD	714	-	1067	0	TBD	TBD	TBD	TBD	1067	1067	1067	1067	1067	-	1067	-	-	-
F-		TBD	TBD	TBD	TBD	TBD	31577	-	-	TBD	31577	-	0	0	TBD	TBD	TBD	TBD	0	0	0	0	0	-	0	-	-	-
H2PO4-		TBD	TBD	TBD	TBD	TBD	1216	-	-	TBD	1216	-	0	0	TBD	TBD	TBD	TBD	0	0	0	0	0	-	0	-	-	-
H2SiO4-2		TBD	TBD	TBD	TBD	TBD	2125	-	-	TBD	2125	-	0	0	TBD	TBD	TBD	TBD	0	0	0	0	0	-	0	-	-	-
H3SiO4-		TBD	TBD	TBD	TBD	TBD	4193	-	-	TBD	4193	-	0	0	TBD	TBD	TBD	TBD	0	0	0	0	0	-	0	-	-	-
HPO4-2		TBD	TBD	TBD	TBD	TBD	206	-	-	TBD	206	-	0	0	TBD	TBD	TBD	TBD	0	0	0	0	0	-	0	-	-	-
HSO4-		TBD	TBD	TBD	TBD	TBD	12976	-	-	TBD	12976	-	1	1	TBD	TBD	TBD	TBD	1	1	1	1	1	-	1	-	-	-
NH4+		TBD	TBD	TBD	TBD	TBD	0	-	-	TBD	0	-	63	0	TBD	TBD	TBD	TBD	63	63	63	63	63	-	63	-	-	-
NO2-		TBD	TBD	TBD	TBD	TBD	906	-	-	TBD	906	-	0	0	TBD	TBD	TBD	TBD	0	0	0	0	0	-	0	-	-	-
NO3-		TBD	TBD	TBD	TBD	TBD	4054	-	-	TBD	4054	-	1	0	TBD	TBD	TBD	TBD	1	1	1	1	1	-	1	-	-	-
O-2		TBD	TBD	TBD	TBD	TBD	17743	-	-	TBD	17743	-	1	1	TBD	TBD	TBD	TBD	1	1	1	1	1	-	1	-	-	-
OH(aq)-		TBD	TBD	TBD	TBD	TBD	2604	-	-	TBD	2604	-	14	0	TBD	TBD	TBD	TBD	14	14	14	14	14	-	14	-	-	-
OH(s)-		TBD	TBD	TBD	TBD	TBD	344	-	-	TBD	344	-	0	0	TBD	TBD	TBD	TBD	0	0	0	0	0	-	0	-	-	-
PO4-3		TBD	TBD	TBD	TBD	TBD	361	-	-	TBD	361	-	0	0	TBD	TBD	TBD	TBD	0	0	0	0	0	-	0	-	-	-
SO4-2		TBD	TBD	TBD	TBD	TBD	6355	-	-	TBD	6355	-	0	0	TBD	TBD	TBD	TBD	0	0	0	0	0	-	0	-	-	-
ORGANICS	PPM (MASS)																											
ANTI-FOAM DECOMPOSITION		TBD	TBD	TBD	TBD	TBD	95	-	-	TBD	95	-	0	0	TBD	TBD	TBD	TBD	0	0	0	0	0	-	0	-	-	-
NVOC		TBD	TBD	TBD	TBD	TBD	108	-	-	TBD	108	-	0	0	TBD	TBD	TBD	TBD	0	0	0	0	0	-	0	-	-	-
SVOC		TBD	TBD	TBD	TBD	TBD	104	-	-	TBD	104	-	1	2	TBD	TBD	TBD	TBD	1	1	1	1	1	-	1	-	-	-
AVG RADIONUCLIDE CONC	Ci/L																											
137Cs		0.00E+00	0.0E+00	0.0E+00	0.0E+00	0.0E+00	4.1E-05	-	-	TBD	4.1E-05	-	7.8E-14	7.8E-14	TBD	TBD	TBD	TBD	7.8E-14	7.8E-14	7.8E-14	7.8E-14	7.8E-14	-	7.8E-14	-	0.00E+00	0.00E+00
154Eu		0.00E+00	0.0E+00	0.0E+00	0.0E+00	0.0E+00	3.5E-06	-	-	TBD	3.5E-06	-	3.9E-10	3.9E-10	TBD	TBD	TBD	TBD	3.9E-10	3.9E-10	3.9E-10	3.9E-10	3.9E-10	-	3.9E-10	-	0.00E+00	0.00E+00
233U		0.00E+00	0.0E+00	0.0E+00	0.0E+00	0.0E+00	8.1E-08	-	-	TBD	8.1E-08	-	9.0E-12	9.0E-12	TBD	TBD	TBD	TBD	9.0E-12	9.0E-12	9.0E-12	9.0E-12	9.0E-12	-	9.0E-12	-	0.00E+00	0.00E+00
235U		0.00E+00	0.0E+00	0.0E+00	0.0E+00	0.0E+00	1.8E-09	-	-	TBD	1.8E-09	-	2.0E-13	2.0E-13	TBD	TBD	TBD	TBD	2.0E-13	2.0E-13	2.0E-13	2.0E-13	2.0E-13	-	2.0E-13	-	0.00E+00	0.00E+00
239Pu		0.00E+00	0.0E+00	0.0E+00	0.0E+00	0.0E+00	5.8E-06	-	-	TBD	5.8E-06	-	1.8E-13	1.8E-13	TBD	TBD	TBD	TBD	1.8E-13	1.8E-13	1.8E-13	1.8E-13	1.8E-13	-	1.8E-13	-	0.00E+00	0.00E+00
241Am		0.00E+00	0.0E+00	0.0E+00	0.0E+00	0.0E+00	3.5E-05	-	-	TBD	3.5E-05	-	2.8E-12	2.8E-12	TBD	TBD	TBD	TBD	2.8E-12	2.8E-12	2.8E-12	2.8E-12	2.8E-12	-	2.8E-12	-	0.00E+00	0.00E+00
244Cm		0.00E+00	0.0E+00	0.0E+00	0.0E+00	0.0E+00	4.5E-08	-	-	TBD	4.5E-08	-	5.0E-12	5.0E-12	TBD	TBD	TBD	TBD	5.0E-12	5.0E-12	5.0E-12	5.0E-12	5.0E-12	-	5.0E-12	-	0.00E+00	0.00E+00
60Co		0.00E+00	0.0E+00	0.0E+00	0.0E+00	0.0E+00	4.7E-07	-	-	TBD	4.7E-07	-	5.3E-11	5.3E-11	TBD	TBD	TBD	TBD	5.3E-11	5.3E-11	5.3E-11	5.3E-11	5.3E-11	-	5.3E-11	-	0.00E+00	0.00E+00
90Sr		0.00E+00	0.0E+00	0.0E+00	0.0E+00	0.0E+00	3.6E-03	-	-	TBD	3.6E-03	-	1.7E-09	1.7E-09	TBD	TBD	TBD	TBD	1.7E-09	1.7E-09	1.7E-09	1.7E-09	1.7E-09	-	1.7E-09	-	0.00E+00	0.00E+00
99Tc		0.00E+00	0.0E+00	0.0E+00	0.0E+00	0.0E+00	9.2E-04	-	-	TBD	9.2E-04	-	1.0E-07	1.0E-07	TBD	TBD	TBD	TBD	1.0E-07	1.0E-07	1.0E-07	1.0E-07	1.0E-07	-	1.0E-07	-	0.00E+00	0.00E+00

GENERAL NOTES:

1. AVERAGE CHEMICAL CONCENTRATIONS, WHERE PROVIDED, ARE SOURCED FROM 24590-BOF-M4C-V11T-00004, DFLAW EMF PROCESS (DEP) FLOWSHEET MASS BALANCE ANALYSIS FOR INPUT TO MATERIAL SELECTION AND CORROSION ASSESSMENTS, TFCOUP 6 AVERAGE FEED VECTOR-NO LEACH CASE. THE RESULTS OF THIS CALCULATION ARE INTENDED FOR THE SOLE PURPOSE OF SUPPORTING THE MATERIAL SELECTION AND CORROSION ASSESSMENT OF THE WTP MATERIALS ENGINEERING TECHNOLOGY (MET) GROUP. USE OF THIS INFORMATION FOR ANY OTHER PURPOSE REQUIRES WRITTEN CONSENT OF WTP PROCESS ENGINEERING GROUP MANAGEMENT.
2. CONTENTS OF THIS DOCUMENT ARE DANGEROUS WASTE PERMIT AFFECTING.
3. THESE STREAM TABLES ARE TO BE USED IN CONJUNCTURE WITH THE FOLLOWING PROCESS FLOW DIAGRAMS: 24590-BOF-M5-V17T-00011, -00012, -00013, AND -00014.
4. REPORTED RADIONUCLIDE CONCENTRATIONS ARE AVERAGES. REFER TO CALCULATION 24590-BOF-M4C-V11T-00001 FOR ESTIMATED RADIONUCLIDE CONCENTRATIONS FOR SHIELDING IN THE EMF.
5. CERTAIN STREAM PROPERTIES/COMPOSITIONS CURRENTLY TBD BASED ON DESIGN MATURITY. STREAM TABLES WILL BE UPDATED AS ADDTIONAL INFORMATION BECOMES AVAILABLE FROM DESIGN DOCUMENTATION AND VENDOR SUBMITTALS.

NOTES:

1. STREAM REPRESENTS NORMAL BATCH TRANSFER MODE OF OPERATION. ZERO FLOW DURING VESSEL MIXING/RECIRCULATION MODE OF OPERATION.
2. STREAM REPRESENTS VESSEL MIXING/RECIRCULATION MODE OF OPERATION. ZERO FLOW DURING BATCH TRANSFERS OF VESSEL CONTENTS.
3. STREAM REPRESENTS OFF-SPEC PRODUCT RECYCLE MODE OF OPERATION. FLOW NORMALLY ZERO.
4. STREAM REPRESENTS OFF-NORMAL TRANSFER MODE OF OPERATION. FLOW NORMALLY ZERO.
5. STREAM REPRESENTS INTERMITTENT DRAIN/PIPELINE/EQUIPMENT FLUSH. FLOW NORMALLY ZERO.
6. NOMINAL FLOW RATES FOR VESSEL MIXING STREAMS TO BE DETERMINED BY MIXING EDUCTOR SUPPLIER CALCULATIONS.
7. MAXIMUM FLOW RATE TO BE DETERMINED BASED ON TRANSFER/RECIRCULATION PUMP SIZING.
8. STREAM PROPERTIES AND STEADY STATE COMPOSITION NOT ATTRIBUTED TO OFF-SPEC/OFF-NORMAL FLOW.
9. TO BE DETERMINED/CONFIRMED PENDING EVAPORATOR SUPPLIER ENGINEERING DELIVERABLES.
10. REQUIRED FLOW RATES, STREAM PROPERTIES, AND COMPOSITIONS TO BE DETERMINED PENDING RESOLUTION OF ICD-31 CHEMICAL ADDITIONS REQUIREMENTS.
11. GRAVITY DRAINED PIPELINE FLUSH.
12. CONTENTS OF DEP-VSL-00003A/B/C ARE BATCH TRANSFERRED TO EITHER LCP-VSL-00001 OR LCP-VSL-00002. NO SIMULTANEOUS FLOW TO BOTH LCP VESSELS FROM EMF.
13. PROCESS CONDENSATE IS USED FOR FLUSHING AND DILUTION OF RETURNS TO TANK FARMS. REPORTED STREAM PROPERTIES AND COMPOSITION ARE IDENTICAL TO PROCESS CONDENSATE QUALIFIED FOR TRANSFER TO LERF/ETF.
14. RECIRCULATION OF PROCESS CONDENSATE THROUGH DEP20d MAY OCCUR SIMULTANEOUSLY WITH BATCH TRANSFERS TO LERF/ETF TO CONTROL FLOW RATE.
15. STREAM PROPERTIES AND COMPOSITION EQUAL TO AIR AT AMBIENT ROOM TEMPERATURE IN THE INTERNAL C5 AREA OF THE EMF.
16. STREAM REPRESENTS HIGH PRESSURE SATURATED STEAM (HPS) TO EJECTORS. COMPONENTS OTHER THAN H2O AT TRACE LEVELS.
17. STREAM REPRESENTS 40 WT% SODIUM NITRITE FOR CORROSION MITIGATION CONTROL IN ACCORDANCE WITH ICD 31. REQUIRED FLOW AND STREAM PROPERTIES TBD.
18. STREAM REPRESENTS 5M SODIUM HYDROXIDE SOLUTION FOR PH ADJUSTMENTS. REQUIRED FLOW AND STREAM PROPERTIES TBD.
19. STREAM REPRESENTS ANTI-FOAM REAGENT FOR DEP-EVAP-00001. STREAM PROPERTIES TBD.
20. STREAM REPRESENTS EVAPORATOR OVERHEADS TO DEP-COND-00001. AVERAGE CHEMICAL CONCENTRATIONS REPORTED EQUIVALENT TO PROCESS CONDENSATE, DEP04. TO BE CONFIRMED BY APPS MODEL RUNS FOR DFLAW.
21. STREAM REPRESENTS DEP-COND-00001/00002 OVERHEADS. COMPOSITION PRIMARILY WATER WITH TRACE ELEMENTS TO BE CONFIRMED BY APPS MODEL RUNS FOR DFLAW.
22. STREAM REPRESENTS DEP-COND-00002/00003 INLETS. COMPOSED OF DEP-COND-00001/00002 OVERHEADS AND EJECTOR STEAM. COMPOSITION PRIMARILY WATER WITH TRACE ELEMENTS TO BE CONFIRMED BY APPS MODEL RUNS FOR DFLAW.

REFERENCES:

1. 24590-BOF-M4C-V11T-00004, DFLAW EMF PROCESS (DEP) FLOWSHEET MASS BALANCE ANALYSIS FOR INPUT TO MATERIAL SELECTION AND CORROSION ASSESSMENTS.
2. 24590-BOF-M4C-V11T-00001, DFLAW EMF PROCESS (DEP) ESTIMATED RADIONUCLIDE CONCENTRATIONS FOR SHIELDING.
3. 24590-BOF-MVC-DEP-00008, PROCESS DATA FOR THE PROCESS CONDENSATE LAG STORAGE VESSELS (DEP-VSL-00005A/B), TRANSFER PUMPS (DEP-PMP-00005A/B), AND RECIRCULATION PUMPS (DEP-PMP-00015A/B/C).
4. 24590-BOF-MVC-DEP-00010, PROCESS DATA FOR THE EVAPORATOR CONCENTRATE VESSELS, DEP-VSL-00003A/B/C, AND PUMPS, DEP-PMP-00003A/B.
5. 24590-WTP-ICD-MG-01-031, ICD 31 - INTERFACE CONTROL DOCUMENT FOR DFLAW EFFLUENT RETURNS TO DOUBLE SHELL TANKS.
6. 24590-BOF-MEC-DEP-00001, DFLAW EMF PROCESS SYSTEM (DEP) EVAPORATOR OPERATING CONDITIONS, HEATING/COOLING DUTY, AND UTILITY REQUIREMENTS.
7. 24590-WTP-DB-ENG-01-001, BASIS OF DESIGN.
8. 24590-LAW-MVC-LCP-00002, LAW CONCENTRATE RECEIPT PROCESS SYSTEM (LCP) DATA.
9. 24590-WTP-ICD-MG-01-006, ICD 06-INTERFACE CONTROL DOCUMENT FOR RADIOACTIVE, DANGEROUS LIQUID EFFLUENTS.

Please note that source, special nuclear, and byproduct materials, as defined in the Atomic Energy Act of 1954 (AEA) are regulated at the U. S. Department of Energy (DOE) facilities exclusively by DOE acting pursuant to its AEA authority. DOE asserts that pursuant to AEA, it has sole and exclusive responsibility and authority to regulate source, special nuclear, and byproduct materials at DOE-owned nuclear facilities. Information contained herein on radionuclides is provided for process description purposes only.

REV	DESCRIPTION	ORG	CHKD	RVWD	APVD	DATE
0	ISSUED FOR DESIGN	DJC	SN	N/A	[illegible]	3/24/16

REVISION HISTORY

ISSUED BY RPP-WTP PDC ISSUE STAMP

	BY	DATE
ORIGINATOR	[signature]	3/24/16
CHECKER	[signature]	3/24/16
APPROVER	[signature]	3/24/16
REVIEWER	N/A	
APPROVER	[signature]	3/24/16

CONTENT APPLICABLE TO ALARA? ☐ YES ☒ NO
ADR NO. N/A REV: N/A

PROJECT No. 24590
SITE HANFORD
AREA 200E
BUILDING No. 25

BECHTEL
RIVER PROTECTION PROJECT
WASTE TREATMENT PLANT
2435 STEVENS CENTER PLACE
RICHLAND, WA 99354

CONTRACT No: DE-AC27-01RV14136

EFFLUENT MANAGEMENT FACILITY PROCESS FLOW DIAGRAMS PROCESS STREAM TABLES (SYSTEM DEP AND DVP) SHEET 2 OF 2

SCALE: NONE
24590-BOF-M3-V17T-00001002
REV 0

"E" SIZE - 44x34
COMPUTER GENERATED - MANUAL DESIGN CHANGES NOT PERMITTED

R11777520

3/24/2016 12:06:13 PM

PLOTTED BY: jrceschi c:\work\jrceschi\dms25225\BOFM3V17T00001002.dgn

FORM E_SDN.DGN 02/2009

Issued by
RPP-WTP PDC

Please note that source, special nuclear, and byproduct materials, as defined in the Atomic Energy Act of 1954 (AEA) are regulated at the U. S. Department of Energy (DOE) facilities exclusively by DOE acting pursuant to its AEA authority. DOE asserts that pursuant to AEA, it has sole and exclusive responsibility and authority to regulate source, special nuclear, and byproduct materials at DOE-owned nuclear facilities. Information contained herein on radionuclides is provided for process description purposes only.

Memorandum

To: Sean Smith Date: June 17, 2016

From: Robert Hanson CCN: 293458

Phone: (703) 429-6768

Subject: **OVERVIEW OF THE EFFLUENT MANAGEMENT FACILITY PROCESS DESIGN UPDATE (SUPERSEDES CCN 290401)**

References:

1) 24590-WTP-3DP-G04B-00037, ENGINEERING CALCULATIONS
2) 24590-WTP-3DP-G04B-00046, ENGINEERING DRAWINGS
3) 24590-WTP-3DP-G04T-00913, REVIEW OF ENGINEERING DOCUMENTS
4) 24590-WTP-3DP-G04B-00034, OFF-PROJECT DESIGN REVIEW
5) 24590-BOF-M5-V17T-00011, PROCESS FLOW DIAGRAM DIRECT FEED EFFLUENT TRANSFER (SYSTEM DEP)
6) 24590-BOF-M5-V17T-00012, PROCESS FLOW DIAGRAM DIRECT FEED EFFLUENT EVAPORATOR (SYSTEM DEP)
7) 24590-BOF-M5-V17T-00013, PROCESS FLOW DIAGRAM DIRECT FEED CONCENTRATE TRANSFER (SYSTEM DEP AND DVP)
8) 24590-BOF-M5-V17T-00014, PROCESS FLOW DIAGRAM DIRECT FEED PROCESS CONDENSATE TRANSFER (SYSTEM DEP)
9) 24590-BOF-M3-V17T-00001001, EFFLUENT MANAGEMENT FACILITY PROCESS FLOW DIAGRAMS PROCESS STREAM TABLES (SYSTEM DEP & DVP) SHEET 1 OF 2
10) 24590-BOF-M3-V17T-00001002, EFFLUENT MANAGEMENT FACILITY PROCESS FLOW DIAGRAMS PROCESS STREAM TABLES (SYSTEM DEP & DVP) SHEET 2 OF 2
11) 24590-WTP-MRR-PENG-15-014, DFLAW 85% AND 100% RECYCLE G2 RUN RESULTS FOR THREE EVAPORATOR CONTROL SCENARIOS
12) 24590-WTP-DB-PET-09-001, PROCESS INPUTS BASIS OF DESIGN (PIBOD)
13) 24590-WTP-ICD-MG-01-030, ICD 30 - INTERFACE CONTROL DOCUMENT FOR DIRECT LAW FEED
14) 24590-WTP-ICD-MG-01-031, ICD 31 - INTERFACE CONTROL DOCUMENT FOR DFLAW EFFLUENT RETURNS TO DOUBLE-SHELL TANKS
15) 24590-WTP-ICD-MG-01-006, ICD 06 - INTERFACE CONTROL DOCUMENT FOR RADIOACTIVE, DANGEROUS LIQUID EFFLUENTS
16) 24590-BOF-RPT-PR-15-001, DIRECT FEED LAW PROCESS CORROSION DATA
17) 24590-WTP-RPT-PR-04-0001-01,02,03,04,05,06, WTP PROCESS CORROSION DATA – VOLUMES 1,2,3,4,5,6
18) 24590-WTP-RPT-M-11-002, WTP MATERIALS LOCALIZED CORROSION DESIGN LIMITS
19) 24590-LAW-N1D-LCP-00001, LCP-VSL-00001 & LCP-VSL-00002 - CONCENTRATE RECEIPT VESSEL - CORROSION EVALUATION
20) 24590-WTP-RPT-ENV-16-001, FEED VECTOR DEVELOPMENT IN SUPPORT OF WTP ENVIRONMENTAL RISK ASSESSMENT ACTIVITIES

This memorandum provides an overview of the Effluent Management Facility (EMF) Process Engineering group design process to support Direct Feed Low Activity Waste (DFLAW) operations. The process information developed during the design process provides mass and energy balance information for normal projected operating conditions and was used in developing the Process Flow Diagrams and the Piping and Instrumentation Diagrams, batch vessel sizing, batch transfer rates, process stream information for material selection, pump sizing and instruments, building shielding and input safety calculations for hazard analysis.

The EMF will operate until the Pretreatment Facility is operational and has three main functions:

(1) evaporate effluents from the Low Activity Waste facility (LAW) and Analytical Laboratory (Lab) facility to allow the overheads (condensate), combined with the LAW Caustic Scrubber solution (at EMF) to be sampled and sent to the Tank Farm (TF) Liquid Effluent Retention / Effluent Treatment (LERF/ETF) facility for final disposal.

(2) Provide multiple paths for handling the evaporator concentrate. The evaporator concentrates have three possible routes:
- The main route is to recycle to LAW and combined with LAW PS feed for vitrification in LAW.
- An alternate route is to return to tank farm double shell tanks after corrosion control chemicals are added.
- A third route is to transfer off-site by tank truck for offsite disposal (still being studied).

(3) Serve as a low point between Tank Farms Low Activity Waste Pretreatment (LAW PS) facility and LAW facility to allow the transfer line to be efficiently designed for flushing, draining and transfer line leak detection.

The main deliverables of the process design are the following:

1. Development of Process Flow Diagrams (PFDs) and Process control/operational strategy
2. Evaporator and major process vessels batch sizing to support facility throughput
3. Process data for process vessels, evaporator, heat exchangers and pumps
4. Process stream data for material selection
5. Process stream data for shielding, safety and emission calculations.

Process calculations are hand calculations supported by Excel spreadsheets and/or supported by data from Aspen Process Performance Simulation (APPS). APPS is a steady state mass balance software model that requires an extensive verification and validation (V&V) process. APPS requires upfront process design to be incorporated into the model and then the V&V process must be completed prior to being able to use the data in calculations.

Due to the need for upfront process design information to support other disciplines' design efforts, the original committed process design calculations have used Excel spreadsheets with data input from earlier LAW APPS mass balance runs to develop bounding information. All calculations will be revised to a confirmed state as the V&V APPS model with DFLAW included is exercised to produce new mass balance information. APPS being a steady state model does not directly support batch sizing calculations. Together, these calculations provide

mass and energy balance information for normal projected operating conditions used in developing the Process Flow Diagrams and the Piping and Instrumentation Diagrams.

Project procedures listed below are followed in the development of calculations and drawings:

1. 24590-WTP-3DP-G04B-00037, *Engineering Calculations*
2. 24590-WTP-3DP-G04B-00046, *Engineering Drawings*
3. 24590-WTP-3DP-G04T-00913, *Review of Engineering Documents*
4. 24590-WTP-3DP-G04B-00034, *Off-Project Design Review*

1. Development of Process Flow Diagrams (PFDs)
    a. The Direct Feed LAW Effluent Management Facility Process System (DEP) PFDs were developed based upon the simplified flow diagrams included in the conceptual design. Conceptual design determined that an evaporator system was the best solution for handling the effluents from the LAW and Lab facilities during DFLAW. During the conceptual design it was determined to allow for more flexibility with the concentrate to not combine with the LAW PS feed prior to evaporation. This allows for the three concentrate routes noted above and is different than the Pretreatment (PT) operation which combines feeds and LAW Radioactive Liquid Disposal (RLD) recycles.
    b. The PFD were further detailed based upon the batch sizing and evaporator throughput and process stream properties inputs as discussed below. Additionally, coordination with other disciplines (Mechanical Systems and Controls and Instrumentation) was used to identify instrumentation and off-normal routes.
    c. The following PFDs were issued for design March 24, 2016. Preliminary PFDs were issued October 2015.
        i. 24590-BOF-M5-V17T-00011, PROCESS FLOW DIAGRAM DIRECT FEED EFFLUENT TRANSFER (SYSTEM DEP)
        ii. 24590-BOF-M5-V17T-00012, PROCESS FLOW DIAGRAM DIRECT FEED EFFLUENT EVAPORATOR (SYSTEM DEP)
        iii. 24590-BOF-M5-V17T-00013, PROCESS FLOW DIAGRAM DIRECT FEED CONCENTRATE TRANSFER (SYSTEM DEP AND DVP)
        iv. 24590-BOF-M5-V17T-00014, PROCESS FLOW DIAGRAM DIRECT FEED PROCESS CONDENSATE TRANSFER (SYSTEM DEP)
    d. Issued with the PFD, are the following EMF Process Flow Stream for the EMF, which were also issued for design March 24, 2016.
        i. 24590-BOF-M3-V17T-00001001, EFFLUENT MANAGEMENT FACILITY PROCESS FLOW DIAGRAMS PROCESS STREAM TABLES (SYSTEM DEP & DVP) SHEET 1 OF 2
        ii. 24590-BOF-M3-V17T-00001002, EFFLUENT MANAGEMENT FACILITY PROCESS FLOW DIAGRAMS PROCESS STREAM TABLES (SYSTEM DEP & DVP) SHEET 2 OF 2
    e. The process stream data tables currently provide flow, temperature, pressure, density, viscosity, average chemical concentrations and average radionuclide concentrations for the major EMF flow streams based upon process stream properties development discussed below. These streams include the following:

i. The major inflows from LAW such as the flow from the LAW SBS Condensate Collection Vessel (RLD-VSL-00005) – stream RLD21and from the LAW Caustic Collection Tank (LVP-TK-00001) – stream LVP21. The main inflow from the Lab from Lab Laboratory Area Sink Drain Collection Vessel (RLD-VSL-00164) – stream RLD41.
ii. The major internal streams in the front end of the process including the transfer from DEP-VSL-00001 - Low Point Drain Vessel- stream DEP03 and the feed to the Evaporator system –stream DEP02.
iii. The major internal streams from the evaporator including the concentrate to DEP-VSL-00003 A/B/C - Evaporator Concentrate Vessels – stream DEP05 and the condensate to the DEP-VSL-00004 A/B - Overhead Sampling Vessels –stream DEP04 and the condensate from these vessels to the DEP-VSL-00005 A/B – Process Condensate Lag Storage Vessels – stream DEP01.
iv. The major streams exiting the facility including the concentrate from the DEP-VSL-00003 A/B/C - Evaporator Concentrate Vessels to the LAW facility LAW Concentrate Receipt Vessels (LCP-VSL-00001/2) –stream DEP13 and condensate from DEP-VSL-00005 A/B – Process Condensate Lag Storage Vessels to LERF/ETF - stream DEP20 and DEP20F. A complete LERF/ETF effluent forecast will be supplied for evaluation per ICD-06 to the TF operator.
v. Other streams with "To Be Determined" (TBD) properties either require vendor information during the design process and will be complete later or off-normal routes with stream properties that cannot be predicted in advance.

f. The process stream date for the Direct Feed LAW Effluent Management Facility Vessel Vent Process System (DVP) is being developed for the air permits and will initially be based upon the air emission calculation discussed below and will be documented in the *Best Available Radionuclide Control Technology Analysis (BARCT) Addendum for the WTP Effluent Management Facility* for radionuclides and in the *Best Available Control Technology Analysis for Toxic Air Pollutants for the WTP Effluent Management Facility* for organic and inorganic COPCs. The stream tables will be revised for after these are completed.

2. Evaporator and major process vessels batch sizing to support facility throughput
   a. The process vessels batch sizes are based upon input from existing LAW/LAB process batch sizing calculations and are documented in the committed DEP batch sizing calculation with assumptions requiring verification. The EMF main process vessel are:
      i. DEP-VSL-00001 - Low Point Drain Vessel
      ii. DEP VSL-00002 - Evaporator Feed Vessel
      iii. DEP-VSL-00003 A/B/C - Evaporator Concentrate Vessels
      iv. DEP-VSL-00004 A/B - Overhead Sampling Vessels
      v. DEP-VSL-00005 A/B – Process Condensate Lag Storage Vessels

b. The main inflows to each of the vessels are discussed below. Batch sizing is based upon normal operations using bounding information.
    i. DEP-VSL-00001 - Low Point Drain Vessel receives line drains and flush after transfers between facilities. The vessel is sized based upon a 48-hour cycle. The main flush/drains are: (1) between LAW PS and LAW facility after feed transfers; (2) between Evaporator Concentrate Vessel and LAW PS feed line prior to feed transfer; (3) between the LAW SBS Condensate Collection Vessel (RLD-VSL-00005) and EMF Evaporator Feed Vessel; (4) between the Lab Laboratory Area Sink Drain Collection Vessel (RLD-VSL-00164) and the Evaporator Feed Vessel, and (5) between LAW Caustic Collection Tank (LVP-TK-00001) and the Overhead Sampling Vessels. Flush volumes are estimated from line routings and frequency with in the 48-hour cycle. The batch volume of DEP-VSL-00001 is 6,300 gallons.
    ii. DEP VSL-00002 - Evaporator Feed Vessel continuously feeds the evaporator and receives transfers from the Low Point Drain Vessel (DEP-VSL-00001), the LAW SBS Condensate Collection Vessel (RLD-VSL-00005) and the Lab Laboratory Area Sink Drain Collection Vessel (RLD-VSL-00164). Additionally, a small volume of sodium hydroxide is added to the vessel to adjust the pH to 12. These vessels are sized based upon a 48-hour cycle of inflows. Based upon the maximum inflows, an evaporator feed rate of 9.7 gpm is required. Using the evaporator feed rate of 10 gpm for 48 hours the batch volume of DEP-VSL-00002 is 28,800 gallons.
    iii. DEP-VSL-00003 A/B/C - Evaporator Concentrate Vessels are designed to operate in a cycling mode between the vessels with first vessel filling with evaporator concentrate, the second vessel being sampled and results analyzed and coordinated with the LAW PS for feed make up, and the third vessel making batch transfers to blend with the LAW PS batch feed transfers in LAW Concentrate Receipt Vessels (LCP-VSL-00001/2). These vessels are sized based upon a 120-hour cycle based upon early discussion with LAW PS on their batch sizing for the LAW PS Lag Storage Vessels and to provide adequate time to review sample analyses and determine the blending strategy. The batch volume is based upon evaporator bottoms at 1 gpm from 120 hours plus one filter flush volume for a total of 7,600 gallons.
    iv. DEP-VSL-00004 A/B - Overhead Sampling Vessels are designed to operate in two modes – receiving and sample/transfer. The first vessel is filling for 24 hours with condensate from the evaporator overheads and transfer(s) from the LAW Caustic Collection Tank (LVP-TK-00001). These vessels are sized to receive two transfers from LVP-TK-00001 (based on a 15.7-hour cycle) and 24 hours of evaporator overhead condensate for total batch volume of 22,300 gallons. After 24 hours, the vessel is sampled to meet 24590-WTP-

ICD-MG-01-006, *Interface Control Document for Radioactive Dangerous Liquid Effluents* (ICD-06) transfer requirements, and is then transferred to one the Process Condensate Lag Storage Vessels (DEP-VSL-00005 A/B).

v. DEP-VSL-00005 A/B – Process Condensate Lag Storage Vessels are designed to operate in two modes – receiving and transfer. The first vessel is filling for 96 hours with condensate from the Overhead Sampling Vessels (DEP-VSL-00004 A/B). When full, after coordination with LERF/ETF the vessel contents are transferred with on line monitoring (flow rate, radiation, pH and conductivity) as required by ICD-06 confirming main process variables are still met. The batch volume is 89,200 gallons.

c. Evaporator duty and rates
   i. The EMF evaporator is sized for continuous feed of 10 gpm to process the - Evaporator Feed Vessel (DEP VSL-00002) batch volume of 28,800 gallons every 48 hours.
   ii. The reboiler duty is based upon the split between overheads/spray mass flow rate and concentrate mass flow rate and includes the duty to heat the feed and estimated heat loss. The nominal split is 10 to 1 and the maximum split is 17 to 1. The reboiler duty is 4,910,000 BTU/hr nominal and 5,163,000 BTU/hr maximum.
   iii. The main condenser duty is based upon condensing and cooling the overheads and spray mass flow rate. The main condenser duty is 4,764,000 BTU/hr nominal and 4,997,000 BTU/hr maximum.
   iv. The inter and after condenser duties are based upon the nominal steam rate required to pull a vacuum on the system. The inter-condenser duty is 426,000 BTU/hr and the after-condenser duty is 167,000 BTU/hr.

d. The EMF throughput has been modeled using the G2 model and documented in 24590-WTP-MRR-PENG-15-014, *DFLAW 85% and 100% Recycle G2 Run Results for Three Evaporator Control Scenarios*. While G2 is not used for design, it is used to document throughput performance. The model using the batch sizes for EMF did not show any restraints based upon the calculated vessel sizes. The process design is for a nominal 10 gpm evaporator feed rate and G2 showed ~8 gpm average feed rate, with a range between 5.3 to 9.4 gpm. The table below compares the design batch volumes to the G2 maximum and average volumes for the same cycle time.

Vessel	Cycle Time (hrs)	Design Batch Volume (gal)	G2 Maximum Batch Volume (gal)	G2 Average Batch Volume (gal)
DEP-VSL-00001	48	6,300	4,900	3,600
DEP-VSL-00002	48	28,800	27,000	22,900

DEP-VSL-00003 A/B/C(1)	120	7,600	4,400	3,000
DEP-VSL-00004 A/B	24	22,300	17,300	15,200
DEP-VSL-00005 A/B	96	89,200	78,400	64,900

(1) DEP-VSL-00003 A/B/C concentration in G2 was limited to 20,000 ppm Cl^-, ^{137}Cs limit or Specific Gravity of 1.2

3. Process stream data for process vessels, evaporator, heat exchangers and pumps
    a. The process vessels stream data are based upon input from 24590-WTP-DB-PET-09-001, *Process Inputs Basis of Design (PIBOD)* and existing LAW/LAB process data calculations and are documented in the committed DEP process data calculations with assumptions requiring verification as needed. The main data points are: (1) temperature, (2) internal pressure, (3) density/ specific gravity, (4) viscosity. These calculations are also used to determine batch transfer pump rates, the need for cooling/heating/insulation, sampling, and mixing.
    b. The main effluent streams received are RLD21from LAW SBS Condensate Collection Vessel (RLD-VSL-00005) and RLD41 from the Lab Laboratory Area Sink Drain Collection Vessel (RLD-VSL-00164). Both of these streams are transferred to the Evaporator Feed Vessel (DEP-VSL-00002). Effluent stream LVP21 from the LAW Caustic Collection Tank (LVP-TK-00001) is transferred to the Overhead Sampling Vessels (DEP-VSL-00004 A/B).
    c. The Interface Control Documents (ICD) provide additional information/requirements. The three main ICDs that effect the design are: (1) 24590-WTP-ICD-MG-01-030, *ICD-30 – Interface Control Document for Direct LAW Feed*; (2) 24590-WTP-ICD-MG-01-031, *ICD 31 - Interface Control Document for DFLAW Effluent Returns to Double Shell Tanks*; (3) 24590-WTP-ICD-MG-01-006, *ICD 06 - Interface Control Document for Radioactive, Dangerous Liquid Effluents*. The process design uses ICD-30 for feed requirements. ICD-30 was based upon the existing LAW process design and provides the required acceptance criteria for radionuclides and chemical component safety and material selection. The process also uses ICD-31 for return of effluents from EMF to the double shell tanks. The process design also uses ICD-06 for the design for the effluent discharge limits and it has been updated for DFLAW operations. When operating in the DFLAW 100% recycle mode, less than 0.2 wt.% of the Technetium-99 feed to LAW is sent to LERF/ETF.

4. Process stream data for material selection
    a. Process system input for material selection for the primary DFLAW EMF facility process equipment is provided by the process engineering report 24590-BOF-RPT-PR-15-001, *Direct Feed LAW Process Corrosion Data*. This report provides the Process Corrosion Datasheet (PCDS) for the EMF vessels. This is similar to the WTP process where the vessel Process Corrosion Datasheets (PCDS) are included in WTP process engineering report 24590-WTP-RPT-PR-04-0001-01 -06, *WTP Process Corrosion Data –Volume 1 to Volume 6* for Pretreatment, HLW and LAW.

b. These PCDS are used by Material Engineering Technology (MET) to develop and issue the EMF Corrosion Evaluations (N1D) datasheets that specify the acceptable materials of construction for each piece of process equipment. These N1D datasheets will be provided as part of the DWP permit design modification for EMF Tanks and Miscellaneous Unit equipment.
c. Both the existing WTP and DFLAW corrosion reports are based upon issued calculations using bounding information for constituents of concern for corrosion. The committed DFLAW input to material selection assessments calculation uses the WTP input to material selection assessments calculation as the input for the effluent streams to Effluent Management Facility and includes assumptions requiring verification. The EMF starts with the RLD21 stream from the LAW SBS Condensate Collection Vessel (RLD-VSL-00005) to Evaporator Feed Vessel (DEP-VSL-00002). The feed is concentrated in the evaporator to 22,500 ppm of chloride which is less than AL6XN Cl- limit of 25,000 ppm from 24590-WTP-RPT-M-11-002, *WTP Materials Localized Corrosion Design Limits* in order not to move to an even higher alloy (Hastelloy). Chloride is the main anion of concern for corrosion in the limits document.
d. The ability of LAW Concentrate Receipt Vessels (LCP-VSL-00001/2) to receive the EMF concentrate was taken into account. For example, the current LCP-VSL-00001/2 vessel chloride level are 27,344 ppm in the issued corrosion evaluation 24590-LAW-N1D-LCP-00001, *LCP-VSL-00001and LCP-VSL-00002 – Concentrate Receipt Vessel – Corrosion Evaluation* and the DEP-VSL-00003 A/B/C chloride level in *Direct Feed LAW Process Corrosion Data* report is 22,500 ppm. When mixed with the larger volume of LAWPS feed in LCP-VSL-00001/2, this chloride value will be reduced further and the Cl^- to OH^- ratio will be met. In the report *DFLAW 85% and 100% Recycle G2 Run Results for Three Evaporator Control Scenarios*, the 100% recycle scenario had an average ratio of feed to recycle of 12 to 1 in the blends. The blending of the LAW PS feed and the EMF concentrate occurs in LAW in the LAW Concentrate Receipt Vessels (LCP-VSL-00001/2). LAW PS feed is not evaporated in the EMF. All LCP batches had LAW PS feed and only 42 of 2100 batches processed in LCP (less than 2% of LCP batches) had no EMF recycles blended with feed, which led to consistent waste loading that only had noticeable change when a new double shell tank was processed.

5. Process stream data for shielding, safety and emission calculations
    a. The process stream data for shielding, safety and emission calculations are based upon input from existing WTP or LAW process data calculations and are documented in the committed DEP process data calculations with assumptions requiring verification.
    b. The EMF process data input for the EMF shielding calculation is based upon the RLD21 stream from the LAW SBS Condensate Collection Vessel (RLD-VSL-00005) mixed with LAW PS feed from line flushes and concentrated in the evaporator to match the issued value of 4.5E-05 Ci/L for ^{137}Cs in the LCP01 feed stream in LAW Concentrate Receipt Vessels (LCP-VSL-00001/2) from the current WTP calculation. This will become the limit on the concentration in EMF and will

be monitored by both in-line instrumentation before sending the evaporator bottoms (concentrate) to the concentrate receipt vessels (DEP-VSL-00003 A/B/C) and confirmed by sampling of these vessels prior to transfer to LAW. Again, LAW PS feed is not evaporated in the EMF.

c. The EMF process data input for inhalation dose for radiation safety calculations is again based upon LAW SBS Condensate Collection Vessel (RLD-VSL-00005) (stream RLD21) mixed with LAW PS feed from line flushes and concentrated in the evaporator to a point that does not affect the ability of LAW to make ILAW compliant glass with the main requirement being the TRU limit of 100 nCi/g. This limit is driven mainly by the ^{241}Am in the stream which also drives the inhalation dose in safety calculations. Based upon the expected ratio of ^{137}Cs to ^{241}Am in the RLD21 stream (confirmed by sampling), the ^{137}Cs control from in-line instrumentation before sending to the concentrate receipt vessels (DEP-VSL-00003 A/B/C) will keep the ^{241}Am below the limits with this confirmed by sampling of these vessels prior to transfer to LAW.

d. Process data for air emissions were based upon the evaporator and vessel vent exhaust again using RLD21 stream from the LAW SBS Condensate Collection Vessel (RLD-VSL-00005) mixed with LAW PS feed and a feed vector from 24590-WTP-RPT-ENV-16-001, *Feed Vector Development in Support of WTP Environmental Risk Assessment Activities*. As stated earlier, air emissions are being documented in the BARCT and TBACT documents for input into the air permits.

In summary, the process information developed during the design process provides mass and energy balance information for normal projected operating conditions and was used in developing the Process Flow Diagrams and the Piping and Instrumentation Diagrams, batch vessel sizing, batch transfer rates, process steam information for material selection, pump sizing and instruments, building shielding and input safety calculations for hazard analysis.

Robert L. Hanson
EMF Process Engineering Group Supervisor
Process Engineering

RLH/rlh

Distribution

Copy Coverage	MSIN	Copy Coverage	MSIN
Curn, Barry	MS16-A	Smith, Sean	MS5-H
Fry, George	Res 3.09.9622	Voke, Bob	MS5-K.1
Hanson, Robert	Res 3.09.9623	PADC	MS19-A
Porcaro, Paul	MS-G		
Robertson, Daniel	MS16-A		
Schappell, Bruce	MS5-I		
Slaathaug, Eric	MS5-K.1		

EFFLUENT MANAGEMENT FACILITY PROCESS FLOW DIAGRAMS PROCESS STREAM INFORMATION - SYSTEM DEP (1/2)

STREAM NUMBER		RLD21	RLD21f	RLD27	RLD41	RLD41c	LCP07h	LVP21	LVP21d	DEP01	DEP01a	DEP01b
FLOW TYPE		BATCH	BATCH	BATCH	BATCH	BATCH	BATCH	BATCH	BATCH	BATCH	CONTINUOUS	BATCH
NOTES		14	5,10,11	4,14	14	5,10,11	5,10,11	14	5,10,11	1	2,6	3,7,8
PHASE		LIQUID	LIQUID	LIQUID	LIQUID	LIQUID	LIQUID	LIQUID	LIQUID	LIQUID	LIQUID	LIQUID
NOMINAL FLOW RATE	GPM (LB/HR)	130	0	0	0	0	0	120	0	130	TBD	0
MAXIMUM FLOW RATE	GPM (LB/HR)	N/A	N/A	130	78	N/A	N/A	N/A	N/A	N/A	N/A	TBD
MINIMUM TEMPERATURE	°F	104	-	59	59	-	-	109	-	40	40	-
NOMINAL TEMERATURE	°F	132	60	86	72	60	TBD	125	60	115	115	-
MAXIMUM TEMPERATURE	°F	166	113	166	95	113	TBD	126	113	126	126	-
OPERATING PRESSURE	PSIG	-	TBD	-	-	TBD	TBD	-	TBD	TBD	TBD	TBD
MINIMUM DENSITY	LB/CU. FT	61.7	61.8	61.7	-	61.8	TBD	65.7	61.8	61.6	61.6	-
NOMINAL DENSITY	LB/CU. FT	62.5	62.3	62.5	62.4	62.3	TBD	N/A	62.3	63.5	63.5	-
MAXIMUM DENSITY	LB/CU. FT	62.8	-	62.8	-	-	TBD	65.8	-	65.8	65.8	-
MINIMUM VISCOSITY	cP	0.4	0.6	0.4	-	0.6	TBD	0.5	0.6	0.5	0.5	-
NOMINAL VISCOSITY	cP	0.6	1.1	0.8	-	1.1	TBD	N/A	1.1	0.6	0.6	-
MAXIMUM VISCOSITY	cP	0.7	-	1.1	-	-	TBD	0.5	-	1.6	1.6	-
REFERENCES		1,2,9	19	10,14,15	11,14,18	19		1,2,5,13	19	1,2,5	1,2,5	
AVG CHEMICAL CONC												
H2O	WT%	98.8%	100.0%	96.2%	99.6%	100.0%	100.0%	99.3%	100.0%	99.8%	99.8%	-
CATIONS	PPM (MASS)											
Al+3		101	0	1564	0	0	0	0	0	0	0	-
B+3		376	0	1488	0	0	0	0	0	0	0	-
Ca+2		91	0	2181	0	0	0	0	0	0	0	-
Ce+4		0	0	20	0	0	0	0	0	0	0	-
Cr+3		8	0	0	0	0	0	0	0	0	0	-
Cr+6		48	0	20	0	0	0	0	0	0	0	-
Fe+3		116	0	1843	1	0	0	0	0	0	0	-
K+		163	0	96	96	0	0	0	0	0	0	-
Li+		231	0	725	0	0	0	0	0	0	0	-
Mg+2		2	0	444	324	0	0	0	0	0	0	-
Na+		3139	0	4521	999	0	0	2761	0	759	759	-
Ni+2		1	0	6	0	0	0	0	0	0	0	-
Se+4		3	0	0	0	0	0	0	0	0	0	-
Si+4		262	0	9994	0	0	0	0	0	0	0	-
Ti+4		40	0	407	0	0	0	0	0	0	0	-
Tl+5		2	0	0	0	0	0	0	0	0	0	-
Zn+2		130	0	1359	0	0	0	0	0	0	0	-
Zr+4		7	0	970	0	0	0	0	0	0	0	-
ANIONS	PPM (MASS)											
B(OH)4-		11	0	0	63	0	0	0	0	0	0	-
C2O4-2		0	0	123	7	0	0	0	0	0	0	-
Cl-		1437	0	100	606	0	0	6	0	4	4	-
CO3-2		0	0	3885	1	0	0	3885	0	1067	1067	-
F-		2338	0	134	94	0	0	1	0	0	0	-
H2PO4-		90	0	0	0	0	0	0	0	0	0	-
H2SiO4-2		157	0	0	0	0	0	0	0	0	0	-
H3SiO4-		310	0	0	0	0	0	0	0	0	0	-
HPO4-2		15	0	0	0	0	0	0	0	0	0	-
HSO4-		964	0	0	0	0	0	0	0	1	1	-
NH4+		0	0	0	28	0	0	229	0	63	63	-
NO2-		0	0	986	0	0	0	0	0	0	0	-
NO3-		0	0	4419	980	0	0	1	0	1	1	-
O-2		1309	0	0	0	0	0	0	0	1	1	-
OH(aq)-		0	0	1097	710	0	0	52	0	14	14	-
OH(s)-		0	0	375	0	0	0	0	0	0	0	-
PO4-3		7	0	298	3	0	0	0	0	0	0	-
SO4-2		453	0	298	358	0	0	1	0	0	0	-
ORGANICS	PPM (MASS)											
ANTI-FOAM DECOMPOSITION		0	0	105	0	0	0	0	0	0	0	-
NVOC		0	0	118	69	0	0	0	0	0	0	-
SVOC		9	0	3	8	0	0	0	0	1	1	-
AVG RADIONUCLIDE CONC	Ci/L											
137Cs		3.1E-06	0.0E+00	2.1E-07	3.1E-06	0.0E+00	0.0E+00	0.0E+00	0.0E+00	7.8E-14	7.8E-14	-
154Eu		2.2E-08	0.0E+00	5.6E-08	1.9E-06	0.0E+00	0.0E+00	0.0E+00	0.0E+00	3.9E-10	3.9E-10	-
233U		5.2E-10	0.0E+00	1.3E-09	2.3E-09	0.0E+00	0.0E+00	0.0E+00	0.0E+00	9.0E-12	9.0E-12	-
235U		1.2E-11	0.0E+00	2.9E-11	7.9E-12	0.0E+00	0.0E+00	0.0E+00	0.0E+00	2.0E-13	2.0E-13	-
239Pu		3.7E-08	0.0E+00	9.2E-08	7.0E-08	0.0E+00	0.0E+00	0.0E+00	0.0E+00	1.8E-13	1.8E-13	-
241Am		4.2E-07	0.0E+00	5.3E-07	1.2E-06	0.0E+00	0.0E+00	0.0E+00	0.0E+00	2.8E-12	2.8E-12	-
244Cm		2.9E-10	0.0E+00	7.3E-10	1.5E-08	0.0E+00	0.0E+00	0.0E+00	0.0E+00	5.0E-12	5.0E-12	-
60Co		0.0E+00	0.0E+00	8.0E-09	9.1E-07	0.0E+00	0.0E+00	0.0E+00	0.0E+00	5.3E-11	5.3E-11	-
90Sr		0.0E+00	0.0E+00	6.1E-05	1.8E-04	0.0E+00	0.0E+00	2.4E-15	0.0E+00	1.7E-09	1.7E-09	-
99Tc		8.6E-05	0.0E+00	1.8E-06	1.6E-06	0.0E+00	0.0E+00	0.0E+00	0.0E+00	1.0E-07	1.0E-07	-

STREAM NUMBER		DEP02	DEP02a	DEP02b	DEP02c	DEP02d	DEP03	DEP03a	DEP03b
FLOW TYPE		CONTINUOUS	CONTINUOUS	BATCH	CONTINUOUS	CONTINUOUS	BATCH	BATCH	BATCH
NOTES			2,6	4,7,8	9	9		12	5,13
PHASE		LIQUID	LIQUID	LIQUID	LIQUID	LIQ/VAP	LIQUID	LIQUID	LIQUID
NOMINAL FLOW RATE	GPM (LB/HR)	10	TBD	0	TBD	TBD	55	N/A	0
MAXIMUM FLOW RATE	GPM (LB/HR)	N/A	N/A	TBD	TBD	TBD	88	130	TBD
MINIMUM TEMPERATURE	°F	40	40	-	TBD	TBD	59	59	40
NOMINAL TEMERATURE	°F	124	124	-	TBD	116	67	N/A	115
MAXIMUM TEMPERATURE	°F	166	166	-	150	150	123	166	126
OPERATING PRESSURE	PSIG	TBD	TBD	TBD	TBD	TBD	TBD	TBD	TBD
MINIMUM DENSITY	LB/CU. FT	60.9	60.9	-	TBD	TBD	61.7	61.7	62
NOMINAL DENSITY	LB/CU. FT	61.7	61.7	-	TBD	TBD	62.3	N/A	64
MAXIMUM DENSITY	LB/CU. FT	68.6	68.6	-	TBD	TBD	68.6	68.6	66
MINIMUM VISCOSITY	cP	0.4	0.4	-	TBD	TBD	0.5	0.4	1
NOMINAL VISCOSITY	cP	0.5	0.5	-	TBD	TBD	1.0	N/A	1
MAXIMUM VISCOSITY	cP	2.5	2.5	-	TBD	TBD	2.5	2.5	2
REFERENCES		1,2,4	1,2,4		12	12	1,2,8		1,2,6
AVG CHEMICAL CONC									
H2O	WT%	98.8%	98.8%	-	TBD	TBD	99.3%	-	99.8%
CATIONS	PPM (MASS)								
Al+3		109	109	-	TBD	TBD	169	-	0
B+3		331	331	-	TBD	TBD	10	-	0
Ca+2		81	81	-	TBD	TBD	9	-	0
Ce+4		1	1	-	TBD	TBD	10	-	0
Cr+3		7	7	-	TBD	TBD	1	-	0
Cr+6		43	43	-	TBD	TBD	10	-	0
Fe+3		103	103	-	TBD	TBD	11	-	0
K+		148	148	-	TBD	TBD	44	-	0
Li+		203	203	-	TBD	TBD	6	-	0
Mg+2		2	2	-	TBD	TBD	1	-	0
Na+		3213	3213	-	TBD	TBD	2208	-	759
Ni+2		1	1	-	TBD	TBD	1	-	0
Se+4		3	3	-	TBD	TBD	0	-	0
Si+4		234	234	-	TBD	TBD	41	-	0
Ti+4		36	36	-	TBD	TBD	2	-	0
Tl+5		2	2	-	TBD	TBD	0	-	0
Zn+2		115	115	-	TBD	TBD	6	-	0
Zr+4		7	7	-	TBD	TBD	4	-	0
ANIONS	PPM (MASS)								
B(OH)4-		10	10	-	TBD	TBD	0	-	0
C2O4-2		7	7	-	TBD	TBD	60	-	0
Cl-		1264	1264	-	TBD	TBD	49	-	4
CO3-2		47	47	-	TBD	TBD	380	-	1067
F-		2055	2055	-	TBD	TBD	66	-	0
H2PO4-		79	79	-	TBD	TBD	1	-	0
H2SiO4-2		138	138	-	TBD	TBD	5	-	0
H3SiO4-		273	273	-	TBD	TBD	11	-	0
HPO4-2		13	13	-	TBD	TBD	0	-	0
HSO4-		845	845	-	TBD	TBD	12	-	1
NH4+		0	0	-	TBD	TBD	0	-	63
NO2-		59	59	-	TBD	TBD	482	-	0
NO3-		264	264	-	TBD	TBD	2159	-	1
O-2		1156	1156	-	TBD	TBD	80	-	1
OH(aq)-		170	170	-	TBD	TBD	585	-	14
OH(s)-		22	22	-	TBD	TBD	183	-	0
PO4-3		24	24	-	TBD	TBD	141	-	0
SO4-2		414	414	-	TBD	TBD	143	-	0
ORGANICS	PPM (MASS)								
ANTI-FOAM DECOMPOSITION		6	6	-	TBD	TBD	51	-	0
NVOC		7	7	-	TBD	TBD	58	-	0
SVOC		8	8	-	TBD	TBD	1	-	1
AVG RADIONUCLIDE CONC	Ci/L								
137Cs		4.1E-06	4.1E-06	-	TBD	TBD	1.0E-05	-	7.8E-14
154Eu		3.5E-07	3.5E-07	-	TBD	TBD	2.2E-06	-	3.9E-10
233U		8.1E-09	8.1E-09	-	TBD	TBD	5.2E-08	-	9.0E-12
235U		1.8E-10	1.8E-10	-	TBD	TBD	1.2E-09	-	2.0E-13
239Pu		5.8E-07	5.8E-07	-	TBD	TBD	3.7E-06	-	1.8E-13
241Am		3.5E-06	3.5E-06	-	TBD	TBD	2.1E-05	-	2.8E-12
244Cm		4.5E-09	4.5E-09	-	TBD	TBD	2.9E-08	-	5.0E-12
60Co		4.7E-08	4.7E-08	-	TBD	TBD	3.2E-07	-	5.3E-11
90Sr		3.6E-04	3.6E-04	-	TBD	TBD	2.4E-03	-	1.7E-09
99Tc		9.3E-05	9.3E-05	-	TBD	TBD	1.3E-04	-	1.0E-07

STREAM NUMBER		DEP04	DEP04b	DEP04c	DEP04d	DEP04f	DEP04g	DEP05	DEP05d	DEP05e
FLOW TYPE		CONTINUOUS	CONTINUOUS	CONTINUOUS	CONTINUOUS	CONTINUOUS	CONTINUOUS	CONTINUOUS	CONTINUOUS	CONTINUOUS
NOTES			15	15	9	9	9	9	9	4,8
PHASE		LIQUID	LIQUID	LIQUID	LIQUID	LIQUID	LIQUID	LIQUID	LIQUID	LIQUID
NOMINAL FLOW RATE	GPM (LB/HR)	9.44	(300)	(152.3)	0.5	0	0	1	9	0
MAXIMUM FLOW RATE	GPM (LB/HR)	10	TBD	TBD	10	TBD	TBD	10	10	10
MINIMUM TEMPERATURE	°F	TBD	TBD	TBD	TBD	TBD	TBD	TBD	TBD	-
NOMINAL TEMERATURE	°F	109	109	109	95	TBD	TBD	116	116	-
MAXIMUM TEMPERATURE	°F	109	109	109	TBD	TBD	TBD	150	150	-
OPERATING PRESSURE	PSIG	TBD	TBD	TBD	TBD	TBD	TBD	TBD	TBD	TBD
MINIMUM DENSITY	LB/CU. FT	61.8	61.8	61.8	TBD	TBD	TBD	TBD	TBD	-
NOMINAL DENSITY	LB/CU. FT	61.8	61.8	61.8	TBD	TBD	TBD	TBD	TBD	-
MAXIMUM DENSITY	LB/CU. FT	TBD	TBD	TBD	TBD	TBD	TBD	TBD	TBD	-
MINIMUM VISCOSITY	cP	0.6	0.6	0.6	TBD	TBD	TBD	TBD	TBD	-
NOMINAL VISCOSITY	cP	0.6	0.6	0.6	TBD	TBD	TBD	TBD	TBD	-
MAXIMUM VISCOSITY	cP	TBD	TBD	TBD	TBD	TBD	TBD	TBD	TBD	-
REFERENCES		1,2,3,5,12	5,12	5,12	12	1,2,12	1,2,12	1,2,3,7	1,2,3,7	
AVG CHEMICAL CONC										
H2O	WT%	100.0%	100.0%	100.0%	100.0%	100.0%	100.0%	82.3%	82.3%	-
CATIONS	PPM (MASS)									
Al+3		0	TBD	TBD	0	0	0	1671	1671	-
B+3		0	TBD	TBD	0	0	0	5077	5077	-
Ca+2		0	TBD	TBD	0	0	0	1244	1244	-
Ce+4		0	TBD	TBD	0	0	0	18	18	-
Cr+3		0	TBD	TBD	0	0	0	106	106	-
Cr+6		0	TBD	TBD	0	0	0	664	664	-
Fe+3		0	TBD	TBD	0	0	0	1575	1575	-
K+		0	TBD	TBD	0	0	0	2272	2272	-
Li+		0	TBD	TBD	0	0	0	3114	3114	-
Mg+2		0	TBD	TBD	0	0	0	32	32	-
Na+		0	TBD	TBD	0	0	0	49370	49370	-
Ni+2		0	TBD	TBD	0	0	0	20	20	-
Se+4		0	TBD	TBD	0	0	0	43	43	-
Si+4		0	TBD	TBD	0	0	0	3593	3593	-
Ti+4		0	TBD	TBD	0	0	0	547	547	-
Tl+5		0	TBD	TBD	0	0	0	29	29	-
Zn+2		0	TBD	TBD	0	0	0	1758	1758	-
Zr+4		0	TBD	TBD	0	0	0	103	103	-
ANIONS	PPM (MASS)									
B(OH)4-		0	TBD	TBD	0	0	0	155	155	-
C2O4-2		0	TBD	TBD	0	0	0	110	110	-
Cl-		3	TBD	TBD	3	3	3	19385	19385	-
CO3-2		0	TBD	TBD	0	0	0	714	714	-
F-		0	TBD	TBD	0	0	0	31577	31577	-
H2PO4-		0	TBD	TBD	0	0	0	1216	1216	-
H2SiO4-2		0	TBD	TBD	0	0	0	2125	2125	-
H3SiO4-		0	TBD	TBD	0	0	0	4193	4193	-
HPO4-2		0	TBD	TBD	0	0	0	206	206	-
HSO4-		1	TBD	TBD	1	1	1	12976	12976	-
NH4+		0	TBD	TBD	0	0	0	0	0	-
NO2-		0	TBD	TBD	0	0	0	906	906	-
NO3-		0	TBD	TBD	0	0	0	4054	4054	-
O-2		1	TBD	TBD	1	1	1	17743	17743	-
OH(aq)-		0	TBD	TBD	0	0	0	2604	2604	-
OH(s)-		0	TBD	TBD	0	0	0	344	344	-
PO4-3		0	TBD	TBD	0	0	0	361	361	-
SO4-2		0	TBD	TBD	0	0	0	6355	6355	-
ORGANICS	PPM (MASS)									
ANTI-FOAM DECOMPOSITION		0	TBD	TBD	0	0	0	95	95	-
NVOC		0	TBD	TBD	0	0	0	108	108	-
SVOC		2	TBD	TBD	2	2	2	104	104	-
AVG RADIONUCLIDE CONC	Ci/L									
137Cs		7.8E-14	TBD	TBD	7.8E-14	7.8E-14	7.8E-14	4.1E-05	4.1E-05	-
154Eu		3.9E-10	TBD	TBD	3.9E-10	3.9E-10	3.9E-10	3.5E-06	3.5E-06	-
233U		9.0E-12	TBD	TBD	9.0E-12	9.0E-12	9.0E-12	8.1E-08	8.1E-08	-
235U		2.0E-13	TBD	TBD	2.0E-13	2.0E-13	2.0E-13	1.8E-09	1.8E-09	-
239Pu		1.8E-13	TBD	TBD	1.8E-13	1.8E-13	1.8E-13	5.8E-06	5.8E-06	-
241Am		2.8E-12	TBD	TBD	2.8E-12	2.8E-12	2.8E-12	3.5E-05	3.5E-05	-
244Cm		5.0E-12	TBD	TBD	5.0E-12	5.0E-12	5.0E-12	4.5E-08	4.5E-08	-
60Co		5.3E-11	TBD	TBD	5.3E-11	5.3E-11	5.3E-11	4.7E-07	4.7E-07	-
90Sr		1.7E-09	TBD	TBD	1.7E-09	1.7E-09	1.7E-09	3.6E-03	3.6E-03	-
99Tc		1.0E-07	TBD	TBD	1.0E-07	1.0E-07	1.0E-07	9.2E-04	9.2E-04	-

EFFLUENT MANAGEMENT FACILITY PROCESS FLOW DIAGRAMS PROCESS STREAM INFORMATION - SYSTEM DVP (1/1)

STREAM NUMBER		DEP06	DEP07	DEP08	DEP09	DEP14	DEP15	DEP16	DEP17	DEP18	DEP24
FLOW TYPE		CONTINUOUS	CONTINUOUS	CONTINUOUS	CONTINUOUS	CONTINUOUS	CONTINUOUS	CONTINUOUS	CONTINUOUS	CONTINUOUS	CONTINUOUS
NOTES		16,17,18	16,17	16,17	9,16,17	16,17,18	17	17	17	17	16,17,18
PHASE		VAPOR	VAPOR	VAPOR	VAPOR	VAPOR	VAPOR	VAPOR	VAPOR	VAPOR	VAPOR
NOMINAL FLOW RATE	LB/HR	TBD	TBD	TBD	TBD	TBD	TBD	TBD	TBD	TBD	TBD
MAXIMUM FLOW RATE	LB/HR	118	59	59	50	118	578	578	578	578	177
MINIMUM TEMPERATURE	°F	-	-	-	-	-	-	-	-	-	-
NOMINAL TEMPERATURE	°F	TBD	TBD	TBD	TBD	TBD	TBD	TBD	TBD	TBD	TBD
MAXIMUM TEMPERATURE	°F	167	167	167	120	167	167	180	180	180	167
OPERATING PRESSURE	PSIG	TBD	TBD	TBD	TBD	TBD	TBD	TBD	TBD	TBD	TBD
MINIMUM DENSITY	LB/CU. FT	TBD	TBD	TBD	TBD	TBD	TBD	TBD	TBD	TBD	TBD
NOMINAL DENSITY	LB/CU. FT	TBD	TBD	TBD	TBD	TBD	TBD	TBD	TBD	TBD	TBD
MAXIMUM DENSITY	LB/CU. FT	-	-	-	-	-	-	-	-	-	-
MINIMUM VISCOSITY	cP	-	-	-	-	-	-	-	-	-	-
NOMINAL VISCOSITY	cP	TBD	TBD	TBD	TBD	TBD	TBD	TBD	TBD	TBD	TBD
MAXIMUM VISCOSITY	cP	2.00E-02	2.00E-02	2.00E-02	1.95E-02	2.00E-02	2.00E-02	2.10E-02	2.10E-02	2.10E-02	2.00E-02
REFERENCES		16	16	16	13,16	16	16,17	16,17	16,17	16,17	16
AVG CHEMICAL CONC											
N2	WT%	75.5%	75.5%	75.5%	TBD	75.5%	75.5%	75.5%	75.5%	75.5%	75.5%
O2	WT%	23.2%	23.2%	23.2%	TBD	23.2%	23.2%	23.2%	23.2%	23.2%	23.2%
Ar	WT%	1.3%	1.3%	1.3%	TBD	1.3%	1.3%	1.3%	1.3%	1.3%	1.3%
MAXIMUM ORGANICS	LB/HR	-	-	-	-	-	1.21E-02	1.21E-02	1.21E-02	1.21E-02	-
MAXIMUM INORGANICS	LB/HR	-	-	-	-	-	8.10E-01	8.10E-01	8.02E-01	8.02E-01	-
MAXIMUM RADIONUCLIDES	Ci/HR	-	-	-	-	-	2.17E-04	2.17E-04	2.11E-05	2.11E-05	-

NOTES:

1. STREAM REPRESENTS NORMAL BATCH TRANSFER MODE OF OPERATION. ZERO FLOW DURING VESSEL MIXING/RECIRCULATION MODE OF OPERATION.
2. STREAM REPRESENTS VESSEL MIXING/RECIRCULATION MODE OF OPERATION. ZERO FLOW DURING BATCH TRANSFERS OF VESSEL CONTENTS.
3. STREAM REPRESENTS OFF-SPEC PRODUCT RECYCLE MODE OF OPERATION. FLOW NORMALLY ZERO.
4. STREAM REPRESENTS OFF-NORMAL TRANSFER MODE OF OPERATION. FLOW NORMALLY ZERO.
5. STREAM REPRESENTS INTERMITTENT DRAIN/PIPELINE/EQUIPMENT FLUSH. FLOW NORMALLY ZERO.
6. NOMINAL FLOW RATES FOR VESSEL MIXING STREAMS TO BE DETERMINED BY MIXING EDUCTOR SUPPLIER CALCULATIONS.
7. MAXIMUM FLOW RATE TO BE DETERMINED BASED ON TRANSFER/ RECIRCULATION PUMP SIZING.
8. STREAM PROPERTIES AND STEADY STATE COMPOSITION NOT ATTRIBUTED TO OFF-SPEC/OFF-NORMAL FLOW.
9. TO BE DETERMINED/CONFIRMED PENDING EVAPORATOR SUPPLIER ENGINEERING DELIVERABLES.
10. GRAVITY DRAINED PIPELINE FLUSH.
11. DIW OR PSW USED FOR FLUSH. COMPONENTS OTHER THAN H2O AT TRACE LEVELS.
12. DEP03a TO HAVE SAME FLOW AND CHEMICAL CONCENTRATIONS AS RLD21/RLD27/RLD41/DEP03 LESS SUSPENDED SOLIDS.
13. DEP03b REPRESENTS INTERMITTENT FLUSH OF REMOVED SUSPENDED SOLIDS USING PROCESS CONDENSATE (DEP20b). FILTER SUPPLIER INFORMATION REQUIRED TO DETERMINE PERCENTAGE OF UNDISSOLVED SOLIDS IN BACKFLUSH.
14. SEE 24590-WTP-DB-PET-09-001, PROCESS INPUTS BASIS OF DESIGN (PIBOD) FOR APPLICABLE STREAM PRESSURE RANGES.
15. STREAM REPRESENTS CONDENSED STEAM FROM DEP-COND-00002/-00003. COMPOSITION PRIMARILY WATER WITH TRACE ELEMENTS TO BE CONFIRMED BY APPS MODEL RUNS FOR DFLAW.
16. SEE DEP15 FOR COMBINED VESSEL VENT PROCESS SYSTEM MAXIMUM RATES OF ORGANICS, INORGANICS, AND RADIONUCLIDES.
17. COMPOSITION AND VISCOSITY FOR SYSTEM DVP STREAMS BASED ON STANDARD AIR PROPERTIES.
18. VESSEL VENT FLOW RATE ACCOUNTS FOR COMBINED FLOW FROM MULTIPLE VESSELS (A/B OR A/B/C WHERE APPLICABLE).

REFERENCES:

1. 24590-BOF-M4C-V11T-00004, DFLAW EMF PROCESS (DEP) FLOWSHEET MASS BALANCE ANALYSIS FOR INPUT TO MATERIAL SELECTION AND CORROSION ASSESSMENTS.
2. 24590-BOF-M4C-V11T-00001, DFLAW EMF PROCESS (DEP) ESTIMATED RADIONUCLIDE CONCENTRATIONS FOR SHIELDING.
3. 24590-BOF-MVC-DEP-00009, BATCH SIZING CALCULATION FOR DEP (DIRECT FEED LAW EFFLUENT MANAGEMENT FACILITY PROCESS SYSTEM) VESSELS: DEP-VSL-00001, -00002, -00003A/B/C, -00004A/B, -00005A/B.
4. 24590-BOF-MVC-DEP-00003, PROCESS DATA FOR THE EVAPORATOR FEED VESSEL (DEP-VSL-00002), TRANSFER PUMPS (DEP-PMP-00002A/B), AND RECIRCULATION PUMPS (DEP-PMP-00012A/B/C).
5. 24590-BOF-MVC-DEP-00007, PROCESS DATA FOR THE OVERHEAD SAMPLING VESSELS (DEP-VSL-00004A/B) AND PUMPS (DEP-PMP-00004A/B).
6. 24590-BOF-MVC-DEP-00008, PROCESS DATA FOR THE PROCESS CONDENSATE LAG STORAGE VESSELS (DEP-VSL-00005A/B), TRANSFER PUMPS (DEP-PMP-00005A/B), AND RECIRCULATION PUMPS (DEP-PMP-00015A/B/C).
7. 24590-BOF-MVC-DEP-00010, PROCESS DATA FOR THE EVAPORATOR CONCENTRATE VESSELS, DEP-VSL-00003A/B/C, AND PUMPS, DEP-PMP-00003A/B.
8. 24590-BOF-MVC-DEP-00011, PROCESS DATA FOR THE LOW POINT DRAIN VESSEL, DEP-VSL-00001, AND PUMPS, DEP-PMP-00001A/B.
9. 24590-LAW-MVC-RLD-00007, PROCESS DATA INPUT FOR LAW SBS CONDENSATE COLLECTION VESSEL, RLD-VSL-00005 AND DISCHARGE PUMPS (RLD-PMP-00003A/B).
10. 24590-LAW-MVC-RLD-00008, PROCESS DATA INPUT FOR LAW PLANT WASH VESSEL (RLD-VSL-00003) AND DISCHARGE PUMPS (RLD-PMP-00001A/B).
11. 24590-LAB-MVC-RLD-00002, PROCESS AND MATERIALS SELECTION DATA FOR LABORATORY AREA SINK DRAIN COLLECTION VESSEL (RLD-VSL-00164).
12. 24590-BOF-MEC-DEP-00001, DFLAW EMF PROCESS SYSTEM (DEP) EVAPORATOR OPERATING CONDITIONS, HEATING/COOLING DUTY, AND UTILITY REQUIREMENTS.
13. 24590-WTP-DB-PET-09-001, PROCESS INPUTS BASIS OF DESIGN (PIBOD).
14. 24590-WTP-M4C-V11T-00024, WTP PROCESS FLOWSHEET MASS & ENERGY BALANCE ANALYSIS FOR INPUT TO MATERIAL SELECTION ASSESSMENTS.
15. 24590-WTP-M4C-V11T-00020, ESTIMATED RADIONUCLIDE CONCENTRATIONS FOR SHIELDING BASED ON TFCOUP6 FEED VECTOR.
16. 24590-BOF-M6C-DVP-00001, DFLAW EMF VESSEL VENT PROCESS SYSTEM (DVP) LINE SIZING.
17. 24590-BOF-M4C-DEP-00001, DFLAW EFFLUENT MANAGEMENT FACILITY AIR EMISSIONS ESTIMATE.
18. 24590-LAB-Z0C-80-00004, BULK SHIELDING CALCULATION FOR THE LABORATORY.
19. 24590-WTP-SC-M-08-001, UTILITIES SERVICE SCHEDULE-PRESSURE & TEMPERATURES SUMMARY REPORT.

GENERAL NOTES:

1. AVERAGE CHEMICAL CONCENTRATIONS, WHERE PROVIDED, ARE SOURCED FROM 24590-BOF-M4C-V11T-00004, DFLAW EMF PROCESS (DEP) FLOWSHEET MASS BALANCE ANALYSIS FOR INPUT TO MATERIAL SELECTION AND CORROSION ASSESSMENTS, TFCOUP 6 AVERAGE FEED VECTOR-NO LEACH CASE. THE RESULTS OF THIS CALCULATION ARE INTENDED FOR THE SOLE PURPOSE OF SUPPORTING THE MATERIAL SELECTION AND CORROSION ASSESSMENT OF THE WTP MATERIALS ENGINEERING TECHNOLOGY (MET) GROUP. USE OF THIS INFORMATION FOR ANY OTHER PURPOSE REQUIRES WRITTEN CONSENT OF WTP PROCESS ENGINEERING GROUP MANAGEMENT.
2. CONTENTS OF THIS DOCUMENT ARE DANGEROUS WASTE PERMIT AFFECTING.
3. THESE STREAM TABLES ARE TO BE USED IN CONJUNCTURE WITH THE FOLLOWING PROCESS FLOW DIAGRAMS: 24590-BOF-M5-V17T-00011, -00012, -00013, AND -00014.
4. REPORTED RADIONUCLIDE CONCENTRATIONS ARE AVERAGES. REFER TO CALCULATION 24590-BOF-M4C-V11T-00001 FOR ESTIMATED RADIONUCLIDE CONCENTRATIONS FOR SHIELDING IN THE EMF.
5. CERTAIN STREAM PROPERTIES/COMPOSITIONS CURRENTLY TBD BASED ON DESIGN MATURITY. STREAM TABLES WILL BE UPDATED AS ADDITIONAL INFORMATION BECOMES AVAILABLE FROM DESIGN DOCUMENTATION AND VENDOR SUBMITTALS.

Please note that source, special nuclear, and byproduct materials, as defined in the Atomic Energy Act of 1954 (AEA) are regulated at the U. S. Department of Energy (DOE) facilities exclusively by DOE acting pursuant to its AEA authority. DOE asserts that pursuant to AEA, it has sole and exclusive responsibility and authority to regulate source, special nuclear, and byproduct materials at DOE-owned nuclear facilities. Information contained herein on radionuclides is provided for process description purposes only.

REV	DESCRIPTION	ORG	CHKD	RVWD	APVD	DATE
0	ISSUED FOR DESIGN	DJC	SN	N/A	[illegible]	3/24/16

REVISION HISTORY

ISSUED BY RPP-WTP PDC ISSUE STAMP

PROJECT No.	24590		
SITE	HANFORD		
AREA	200E		
BUILDING No.	25		
	BY	DATE	
ORIGINATOR	[signature]	3/24/16	
CHECKER	[signature]	3/24/16	
APPROVER	[signature]	3/24/16	
REVIEWER	N/A		
APPROVER	[signature]	3/24/16	

CONTENT APPLICABLE TO ALARA? [ ] YES [X] NO

ADR NO. N/A REV: N/A

RIVER PROTECTION PROJECT
WASTE TREATMENT PLANT
2435 STEVENS CENTER PLACE
RICHLAND, WA 99354

CONTRACT No: DE-AC27-01RV14136

EFFLUENT MANAGEMENT FACILITY PROCESS FLOW DIAGRAMS PROCESS STREAM TABLES (SYSTEM DEP AND DVP) SHEET 1 OF 2

SCALE: NONE

24590-BOF-M3-V17T-00001001 REV 0