OFFICE OF RIVER PROTECTION
P.O. Box 450, MSIN H6-60
Richland, Washington 99352

AUG 03 2016

16-ECD-0036

Ms. Alexandra K. Smith, Program Manager
Nuclear Waste Program
Washington State
Department of Ecology
3100 Port of Benton Blvd.
Richland, Washington 99354

Ms. Smith:

SUBMITTAL OF HANFORD FACILITY RESOURCE CONSERVATION AND RECOVERY ACT PERMIT MODIFICATION NOTIFICATION FORM 24590-LAW-PCN-ENV-14-001 REPLACE PIPING AND INSTRUMENTATION DIAGRAMS FOR LOW-ACTIVITY WASTE PRIMARY OFFGAS PROCESS SYSTEM AND MECHANICAL DATA SHEETS FOR THE SUBMERGED BED SCRUBBER CONDENSATE VESSELS

References:

1. WA7890008967, "Dangerous Waste Portion of the Hanford Facility Resource Conservation and Recovery Act Permit for the Treatment, Storage, and Disposal of Dangerous Waste, Part III, Operating Unit 10, 'Waste Treatment and Immobilization Plant.'"

2. ORP letter from K.W. Smith to A.K. Smith, Ecology, "Submittal of Hanford Facility Resource Conservation and Recovery Act Permit Modification Notification Form 24590-LAW-PCN-ENV-14-001 Replace Piping and Instrumentation Diagrams for Low-Activity Waste Primary Offgas Process System and Mechanical Data Sheets for the Submerged Bed Scrubber Condensate Vessels," 16-ECD-0022, dated June 6, 2016.

This letter supersedes U.S. Department of Energy, Office of River Protection letter 16-ECD-0022 which inadvertently omitted the Attachments.

This letter transmits Hanford Facility Resource Conservation and Recovery Act Permit Modification Notification Form 24590-LAW-PCN-ENV-14-001, attached, for the Washington State Department of Ecology review and approval. The form describes a requested Class 1 modification to Reference 1.

Modification Notification Form 24590-LAW-PCN-ENV-14-001 submits updated Piping and Instrumentation Diagrams for the Low-Activity Waste Primary Offgas Process System and Mechanical Data Sheets for the Submerged Bed Scrubber Condensate Vessels.

Washington State Department of Ecology comments resulting from review of this modification notification form and the associated information have been dispositioned.

If you have any questions, please contact me, or your staff may contact Jan B. Bovier, Environmental Compliance Division, (509) 376-9630.

Brian A. Harbin for

Robert G. Hastings, Assistant Manager
Technical and Regulatory Support

ECD:JBB

Attachment

cc w/attach:
B.L. Curn, BNI
B.G. Erlandson, BNI
S. Greagor, BNI
M. McCullough, BNI
S.K. Murdock, BNI
D.C. Robertson, BNI
Administrative Record (WTP H-0-8)
BNI Correspondence
Environmental Portal, LMSI

cc electronic:
J. Cantu, Ecology (2 hard copies)
A.S. Carlson, Ecology (6 hard copies, Public Review)
T.Z. Gao, Ecology
M.E. Jones, Ecology
J.K. Perry, MSA
A.C. McKarns, RL

cc w/o attach:
R.S. Skeen, CTUIR
S.L. Dahl, Ecology
D. McDonald, Ecology
G.P. Bohnee, NPT
K. Niles, Oregon Energy
E.D. MacAlister, RL
R. Jim, YN

Attachment
16-ECD-0036
(11 Pages Excluding Cover Sheet)

Hanford Facility RCRA Permit Modification Notification
Form 24590-LAW-PCN-ENV-14-001

Quarter Ending Sept 30, 2016 24590-LAW-PCN-ENV-14-001

Hanford Facility RCRA Permit Modification Notification Form
Part III, Operating Unit 10
Waste Treatment and Immobilization Plant

Index

Page 2 of 3: Hanford Facility RCRA Permit, Part III, Operating Unit 10, Waste Treatment and Immobilization Plant

Replace Piping and Instrumentation Diagrams (P&IDs) for the LAW Primary Offgas Process System (LOP) in Appendix 9.2 of the Dangerous Waste Permit (DWP).

Replace Mechanical Data Sheets for SBS Condensate Vessels in Appendix 9.6 of the DWP.

Submitted by Co-Operator:

Roger J. Landon 7/6/16
Roger J. Landon Date

Reviewed by ORP Program Office:

Jeanne Grindstaff 8/1/16
J. F. Grindstaff Date

Quarter Ending Sept 30, 2016 24590-LAW-PCN-ENV-14-001

Hanford Facility RCRA Permit Modification Notification Form	
Unit: **Waste Treatment and Immobilization Plant**	Permit Part: **Part III, Operating Unit 10**

Description of Modification:

The purpose of this Class 1 prime modification is to update and replace the following P&IDs and mechanical data sheets in Appendices 9.2 and 9.6 of the DWP:

Appendix 9.2			
Replace:	24590-LAW-M6-LOP-00001004, Rev. 0	With:	24590-LAW-M6-LOP-00001004, Rev. 1
	24590-LAW-M6-LOP-00002004, Rev. 0		24590-LAW-M6-LOP-00002004, Rev. 1
Appendix 9.6			
Replace:	24590-LAW-MVD-LOP-P0004, Rev. 1	With:	24590-LAW-MVD-LOP-00004, Rev. 6
	24590-LAW-MVD-LOP-P0005, Rev. 1		24590-LAW-MVD-LOP-00005, Rev. 6

This modification requests Ecology approval and incorporation into the permit the specific changes to the P&IDs and mechanical data sheets indicated by revision notes, clouds and bars. These documents include changes provided in applicable document change forms (e.g., DCN, SCN, SDDR, FCN, FCR, etc.). In addition, the P&IDs and mechanical data sheets include changes associated with the resolution to comments on change documents since the issuance of the last revision of the permitted documents.

Significant changes to the P&IDs are summarized below:

- Modified and added notes.
- Incorporated changes from change documentation identified in the Notes section on each drawing.
- Removed call-outs of pipe diameters under flow valves FV-1050 and FV-2050 in Grid E6.
- Revised flow valves FV-1050 and FV-2050 in Grid E6 to close on loss of power or melter plenum high pressure to isolate air flow to the wet electrostatic precipitators. Designation of failure position for these flow valves was changed from fail-open (FO) to fail-closed (FC).
- Modified and added valve position switches to flow valves FV-1140 and FV-2140 in Grid F3.
- Added high-high alarms to liquid level indicators LI-1060 and LI-2060 in Grid E3.
- Revised instrumentation to indicate density correction for flow control loops in Grid E6.
- Updated symbols for radar level transmitters LT-1060 and LT-2060 in Grid E3 to show that these are foundation fieldbus devices.
- Provided safety interlock signals PDSHH-1410A and PDSHH-1528/1529 to FC-1050 and PDSHH-2410A and PDSHH-2528/2529 to FC-2050 in Grids F6, F7 and F8.
- Revised manual valves LOP-V-10052 and LOP-V-10068 to a position of normally opened (NO) / locked opened (LO) in Grid F4.
- Changed isolation valves from a gate valve to a ball valve for ISA-V-40187 and ISA-V-69659 in Grid E6; ISA-V-68968 and ISA-V-69438 in Grid G6; ISA-V-68969 and ISA-V-69439 in Grid E5; ISA-V-68970 and ISA-V-69437 in Grid D7.
- Revised the line number for nozzle N31 in Grids E4 and E5.
- Updated references to off-sheet P&IDs.

Significant changes to the mechanical data sheets are summarized below:

- Updated reference document numbers for the P&IDs.
- Revised the tag numbers of the eductors (mixers).
- Updated Design Data such as quality levels, volumes (maximum operating and total), internal pressures (vessel operating), external pressures (vessel operating, vessel design, and coil/jacket design), and temperatures (vessel operating). Added Design Data for the average dose rates, actual weights (empty, operating, and test), seismic base moments, hydrostatic test pressures and fabrication specs.

Quarter Ending Sept 30, 2016 24590-LAW-PCN-ENV-14-001

- Updated Materials of Construction Data for the pipes and forgings. Added data for the eductors.
- Revised Remarks section.
- It should be noted that mechanical data sheets currently included in the DWP are 24590-LAW-MVD-LOP-P0004 and -P0005, Rev. 1 (dated 3/14/05). These "P" permit version of the data sheets were the most current version at the time when these sheets were submitted for incorporation into the DWP. The source documents for these data sheets were 24590-LAW-MVD-LOP-00004 and -00005, Rev. 5 (dated 2/06/05). The version of the mechanical data sheets being submitted in this PCN is Rev. 6 (dated 10/20/14). See approval page (last page) of the data sheets for the history of versions and dates.

This PCN updates information in Appendices 9.2 and 9.6 to reflect current design. This DWP component may be re-evaluated to confirm design adequacy. If the re-evaluation results in future design changes, the changes will be reviewed by Ecology in subsequent permit modifications.

The following outstanding change documents have been submitted to Ecology pursuant to Permit Condition III.10.C.9.h and are maintained in the WTP Operating Record:
24590-LAW-M6-LOP-00001004, Rev. 1 and 24590-LAW-M6-LOP-00002004, Rev. 1

- 24590-LAW-M6N-LOP-00099 – provided to Ecology in milk run (CCN 275855)
- 24590-LAW-M6N-M80T-00033 – provided to Ecology in milk run (CCN 275837)
- 24590-LAW-M6N-LOP-00102 – provided to Ecology in milk run (CCN 287548)
- 24590-LAW-M6N-LOP-00104 – provided to Ecology in milk run (CCN 287545)

In accordance with Permit Condition III.10.C.2.e, this permit modification sent to Ecology may include page changes to the Permit, attachments, and permit application supporting documentation.

WAC 173-303-830 Modification Class:	Class 1	Class 11	Class 2	Class 3
Please mark the Modification Class:		X		

Enter relevant WAC 173-303-830, Appendix I Modification citation number: N/A
Enter wording of WAC 173-303-830, Appendix I Modification citation:

In accordance with WAC 173-303-830(4)(d)(i), this modification notification is requested to be reviewed and approved as a Class 11 modification. WAC 173-303-830(4)(d)(ii)(A) states, "Class 1 modifications apply to minor changes that keep the permit current with routine changes to the facility or its operation. These changes do not substantially alter the permit conditions or reduce the capacity of the facility to protect human health or the environment. In the case of Class 1 modifications, the director may require prior approval."

Modification Approved/Concur: ☐ Yes ☐ Denied (state reason below) Reason for denial:	Reviewed by Ecology:
	S. Dahl Date

24590-LAW-M6-LOP-00001004

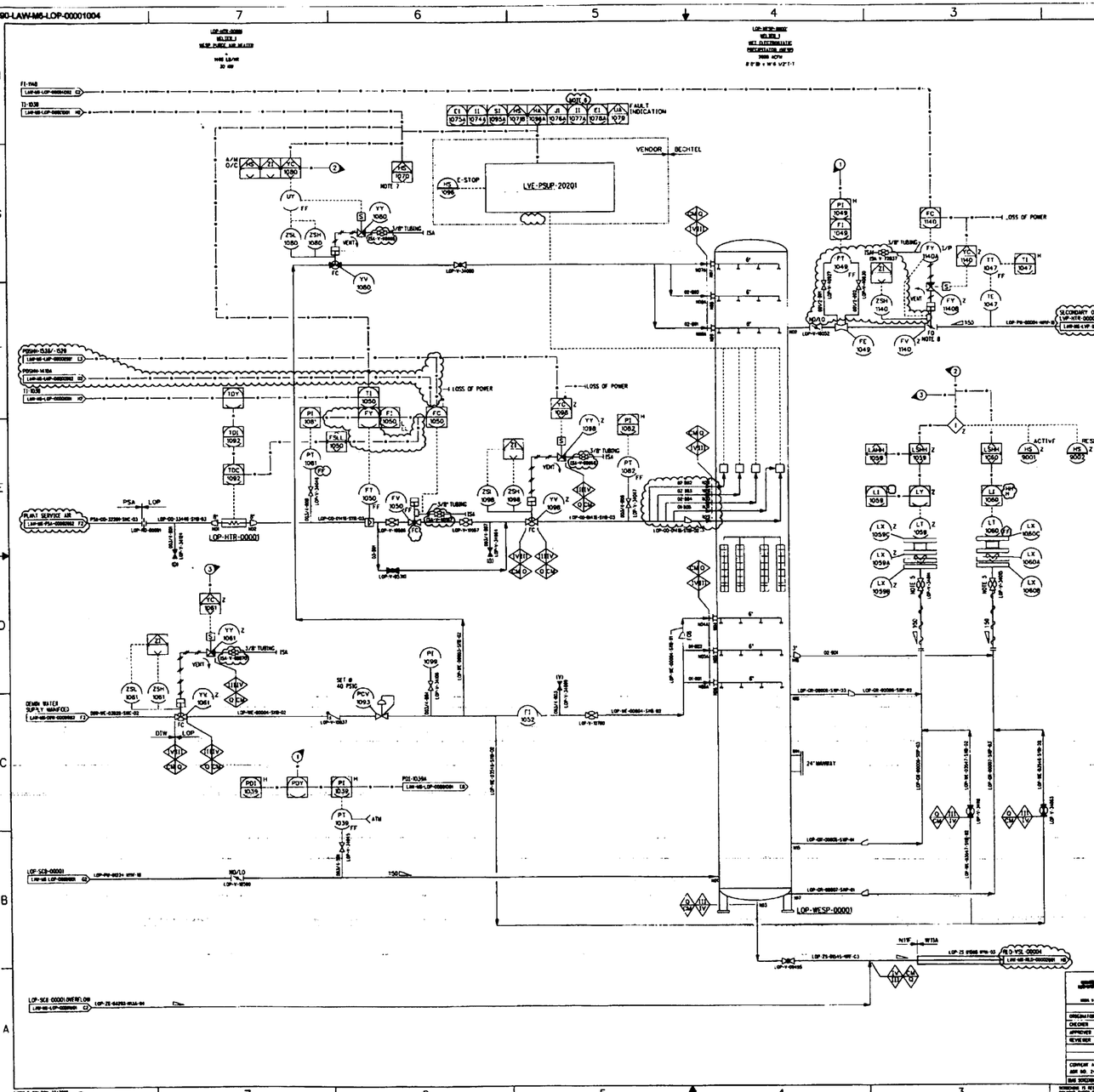

NOTES:

1. SEE DRAWINGS 24590-WTP-M6-50-00001 THROUGH 24590-WTP-M6-50-00008 FOR GENERAL NOTES, SYMBOLS AND LEGEND, AND GENERAL SLOPE REQUIREMENTS.
2. CONTENTS OF THIS DOCUMENT ARE DANGEROUS WASTE PERMIT AFFECTING
3. THE PRESSURE BOUNDARY FOR ALL COMPONENTS ON THIS DRAWING IS QUALITY LEVEL Q AND SEISMIC CATEGORY SC-III, UNLESS OTHERWISE NOTED.
4. ALL LINES SHOWN ON THIS DRAWING SHALL BE FREE DRAINING, UNLESS OTHERWISE NOTED.
5. RADAR GUIDE TUBE TO BE ROUTED TO TRANSMITTER LOCATED ON THE FLOOR ABOVE.
6. INSTRUMENT PERFORMS AN AIR PERMIT FUNCTION INDICATION DISPLAYED AT PCJ.
7. LOP-WESP-00001 WASH SEQUENCE HAND SWITCH.
8. TO BE SUPPLIED WITH A STOP AT 70% CLOSURE.
9. THIS DRAWING IS CONVERTED FROM A SINGLE SHEET TO MULTI-SHEET DRAWINGS AND, IN PART, SUPERSEDES 24590-LAW-M6-LOP-00001 REV 5. CLOUDS DEPICT MAJOR CHANGES MADE FROM SUPERSEDED DRAWING. THIS DRAWING INCLUDES INFORMATION FROM 24590-LAW-M6M-20-00001, 24590-LAW-M6M-LOP-00008, -00033, -00037, -00040, -00051, -00052, -00060, 24590-LAW-M6PM-00004, -00013, -00015, 24590-LAW-M6PR-LOP-00003, AND -00009; PCV-1093 SET PRESSURE HAS BEEN REVISED FROM 50 PSIG TO 40 PSIG.
10. REVISION 1: INCORPORATED 24590-LAW-M6LN-LOP-00003, 24590-LAW-M6N-LOP-00013, -00063, -00066, -00069, -00070, -00071, -00075, AND 24590-LAW-M6N-M6GT-00016. REVISED OFF SHEET CONNECTOR. ADDED ROOT VALVES AND BRANCH NUMBERS. CHANGED VALVE POSITION FROM "NO" TO "NO/LO". NOZZLE N31, AND CONNECTING PIPE SIZE FROM 2" TO 4". THIS P&ID HAS BEEN REVIEWED BY E&HS FOR ALL LIMITED AND PHYSICALIZATION CHANGE DOCUMENTS THAT WERE PREVIOUSLY ISSUED (SEE CCN 259823).

HOLD/OPEN ITEMS:

NONE

REFERENCES:

1. 24590-LAW-3YD-LOP-00001, SYSTEM DESCRIPTION FOR THE LAW PRIMARY OFF GAS (LOP) AND SECONDARY OFFGAS/VESSEL VENT (LVP) SYSTEMS

Please note that source, special nuclear, and byproduct materials, as defined by the Atomic Energy Act of 1954 (AEA) are regulated at the U. S. Department of Energy (DOE) facilities exclusively by DOE acting pursuant to its AEA authority. DOE asserts that pursuant to AEA, it has sole and exclusive responsibility and authority to regulate source, special nuclear, and byproduct materials at DOE-owned nuclear facilities. Information contained herein on radioactivity is provided for process description purposes only.

REV	DESCRIPTION	ORIG	CHKD	REVIEWED	APPD	DATE
1	REVISED PER NOTE 10	MRB	JRST	[illegible]	[illegible]	[illegible]
0	ISSUED FOR CONSTRUCTION SEE NOTE 9	BBD	SJ	[illegible]	[illegible]	[illegible]

REVISION HISTORY

Q

PROJECT No	24590	
SITE	HANFORD	
AREA	PRC	
BUILDING No	20	
BY	DATE	
DRAWN BY	SPELL, MICHAEL	3/4/10
CHECKED	JOHN, SATISH	3/4/10
APPROVED	STEVENS/SCHEIBER,J	3/4/10
REVIEWED	WILLISCHAN/WEINELL	3/4/10

COMPLEX APPLICABLE TO ALARA? ☐ YES ☐ NO
ASR NO. 24590-LAW-ASR-R-02-027 REV 1
ISM SCREENED HAZARDS(HS) (30) ISM INFO# IF YES (DATE)

RIVER PROTECTION PROJECT
WASTE TREATMENT PLANT
2435 STEVENS CENTER PLACE
RICHLAND, WA 99354

CONTRACT No DE-AC27-01RV14136

P&ID - LAW
LAW PRIMARY OFFGAS PROCESS SYSTEM MELTER 1 LOP-WESP-00001

SCALE: NONE | 24590-LAW-M6-LOP-00001004 | REV 1

C:\BPI\Workspace\Project\HANFORD\LAW\PROJECT\24590-LAW-M6-LOP-00001004.dwg

24590-LAW-M6-LOP-00002004

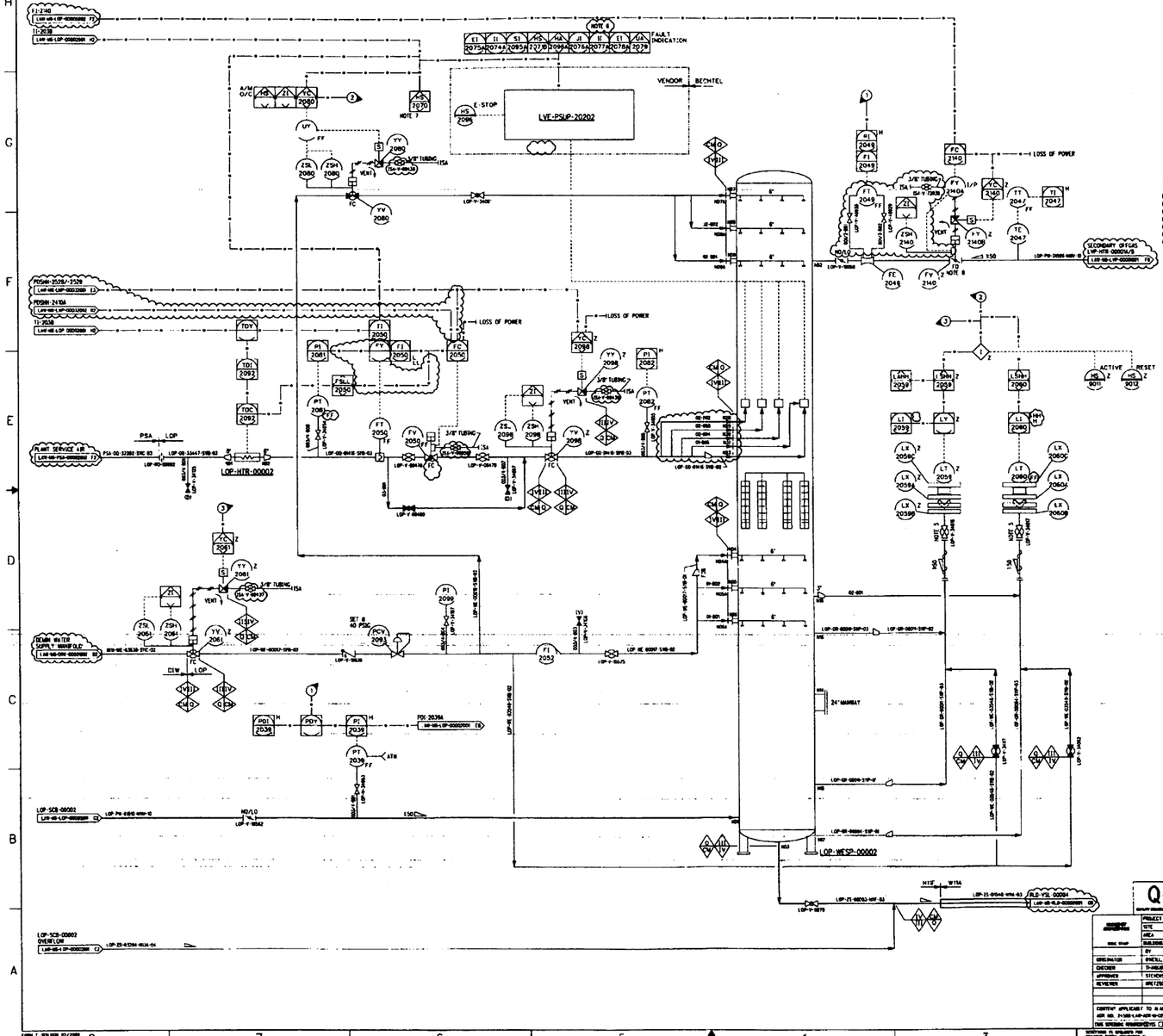

NOTES:

1. SEE DRAWINGS 24590-WTP-M6-S0-00001 THROUGH 24590-WTP-M6-S0-00008 FOR GENERAL NOTES, SYMBOLS AND LEGEND, AND GENERAL SLOPE REQUIREMENTS.
2. CONTENTS OF THIS DOCUMENT ARE DANGEROUS WASTE PERMIT AFFECTING.
3. THE PRESSURE BOUNDARY FOR ALL COMPONENTS ON THIS DRAWING IS QUALITY LEVEL Q AND SEISMIC CATEGORY SC-III, UNLESS OTHERWISE NOTED.
4. ALL LINES SHOWN ON THIS DRAWING SHALL BE FREE DRAINING, UNLESS OTHERWISE NOTED.
5. RADAR GUIDE TUBE TO BE ROUTED TO TRANSMITTER LOCATED ON THE FLOOR ABOVE.
6. INSTRUMENT PERFORMS AN AIR PERMIT FUNCTION. INDICATION DISPLAYED AT PCJ.
7. LOP-WESP-00002 WASH SEQUENCE HAND SWITCH.
8. TO BE SUPPLIED WITH A STOP AT 70% CLOSURE.
9. THIS DRAWING IS CONVERTED FROM A SINGLE SHEET TO MULTI-SHEET DRAWINGS AND, IN PART, SUPERSEDES 24590-LAW-M6-LOP-00002 REV. 5. CLOUDS DEPICT MAJOR CHANGES MADE FROM SUPERSEDED DRAWING. THIS DRAWING INCLUDES INFORMATION FROM 24590-LAW-M6H-20-00001, 24590-LAW-M6H-LOP-00008, -00033, -00037, -00040, -00051, -00053, -00060, 24590-LAW-M6PR-LOP-00004, -00009, 24590-LAW-M6PH-LOP-00005, -00013, AND -00015. PCV-2093 SET PRESSURE HAS BEEN REVISED FROM 60 PSIG TO 40 PSIG.
10. REVISION 9 INCORPORATED 24590-LAW-M6H-LOP-00003, 24590-LAW-M6H-LOP-00013, -00063, -00066, -00069, -00070, -00071, -00075, 24590-LAW-M6H MBOT-00016. REVISED OFF SHEET CONNECTOR, ADDED ROOT VALVE AND BRANCH NUMBERS, CHANGED VALVE POSITION FROM "NO" TO "NO/LO", NOZZLE N31, AND CONNECTING PIPE SIZE FROM 2" TO 1". THIS P&ID HAS BEEN REVIEWED BY EAMS FOR ALL LIMITED AND PHYSICALIZATION CHANGE DOCUMENTS THAT WERE PREVIOUSLY ISSUED (SEE CCN 233221).

HOLD/OPEN ITEMS:

NONE

REFERENCES:

1. 24590-LAW-3YD-LOP-00001, SYSTEM DESCRIPTION FOR THE LAW PRIMARY OFF GAS (LOP) AND SECONDARY OFFGAS/VESSEL VENT (LVP) SYSTEMS.

Please note that source, special nuclear, and byproduct materials, as defined in the Atomic Energy Act of 1954 (AEA) are regulated at the U. S. Department of Energy (DOE) facilities exclusively by DOE acting pursuant to its AEA authority. DOE asserts that pursuant to AEA, it has sole and exclusive responsibility and authority to regulate source, special nuclear, and byproduct materials at DOE-owned nuclear facilities. Information contained herein on radionuclides is provided for process description purposes only.

REV	DESCRIPTION	ORG	CHKD	REVWD	APVD	DATE
1	REVISED PER NOTE 10					
0	ISSUED FOR CONSTRUCTION SEE NOTE 9	MBD	SJ	SJ	SJ	05/05/05

REVISION HISTORY

RIVER PROTECTION PROJECT
WASTE TREATMENT PLANT
2435 STEVENS CENTER PLACE
RICHLAND, WA 99354

CONTRACT No. DE-AC27-01RV14136

P&ID - LAW
LAW PRIMARY OFFGAS PROCESS SYSTEM
MELTER 2
LOP-WESP-00002

PROJECT No.	24590	
SITE	HANFORD	
AREA	200E	
BUILDING No.	30	
BY		DATE
ORIGINATOR	KNELL, MICHAEL	3/26/10
CHECKER	TI-HSUIS, SUNSHINE	3/26/10
APPROVER	STEVENS, MARCUS	3/31/10
REVIEWER	BRETZENS-ARR, STUART	3/31/10

CONTRACT APPLICABLE TO ALARM ☐ YES ☒ NO

ASR NO. 24590-LAW-ASR-10-CP-072 REV. 1

THIS DRAWING REQUIRES ☐ YES ☒ NO DATA IF YES

SCALE: NONE

24590-LAW-M6-LOP-00002004

REV 1

DRAWING TYPE: SCHEMATIC & PFD

COMPUTER GENERATED - MANUAL DO NOT CHANGE IN DOCUMENT

6/25/2004 2:28:50 PM

ISSUED BY
RPP-WTP PDC

R11683140

MECHANICAL DATA SHEET: VESSEL

PLANT ITEM No.
24590-LAW-MV-LOP-VSL-00001

Project:	*RPP-WTP*	P&ID:	*24590-LAW-M6-LOP-00001002* 6
Project No:	*24590*	Process Data Sheet:	
Project Site:	*Hanford*	Vessel Drawing	*24590-LAW-MV-LOP-00001*
Description:	*LAW Melter 1 SBS Condensate Vessel*		

Reference Data

Charge Vessels (Tag Numbers)	*Not Applicable*
Pulsejet Mixers / Agitators (Tag Numbers)	*24590-LAW-MY-LOP-EDUC-00001* 6
RFDs/Pumps (Tag Numbers)	*Not Applicable*

Design Data

Quality Level		*Q* 6	Fabrication Specs	*24590-WTP-3PS-MV00-T0001 (PVDF)*		
Seismic Category		*SC-III*	Design Code	*ASME VIII Div 1*		
Service/Contents		*LAW Condensate*	Code Stamp	*Yes*		
Design Specific Gravity		*1.03*	NB Registration	*Yes*		
Maximum Operating Volume	gal	*7,325* 6	Weights (lbs)	Empty	Operating	Test
Total Volume	gal	*8,944* 6	Estimated	*25,500*	*91,700*	*100,800*
			Actual *	*23,000 (Note 8)* 6	*102,000 (Note 8)* 6	*98,000 (Note 8)* 6
Average Dose Rate		*2.10 x 10¹ Rad/hr (Note 14)* 6				

Inside Diameter	inch	*144*			Wind Design	*Not Required*	
Length/Height (TL-TL)	inch	*98*			Snow Design	*Not Required*	
		Vessel Operating (Note 11)	Vessel Design	Coil/Jacket Design	Seismic Design	*24590-WTP-3PS-MV00-T0002* *24590-WTP-3PS-FB01-T0001*	
Internal Pressure	psig	*-1.7*	*15*	*125*	Seismic Base Moment *	ft*lb	*Note 9* 6
External Pressure	psig	*1.7* 6	*15* 6	*15* 6	Postweld Heat Treat	*Not Required*	
Temperature	°F	*122*	*237*	*237*	Corrosion Allowance	Inch	*0.08 vessel (Note 5), 0.04 Jacket*
Min. Design Metal Temp.	°F	*40*			Hydrostatic Test Pressure *	psig	*20 vessel 163 cooling coils* 6

Materials of Construction

Component	Material	Minimum Thickness / Size	Containment
Top Head	*SB-575 N06022*	*Note 10*	*Auxiliary*
Shell	*SB-575 N06022*	*Note 10*	*Primary*
Bottom Head	*SB-575 N06022*	*Note 10*	*Primary*
Support	*SA-240 304 (Note 1 & 6)*	*Note 10*	*N/A*
Jacket/Coils/Half-Pipe Jacket	*SA-312 304 (Note 1)*	*Note 10*	*N/A*
Internals	*SB-575 N06022 / SB-622 N06022 (Note 7)*	*Note 10* 6	*Thermowells Primary*
Pipe (Seamless)	*SB-622 N06022 / SA-312 TP304* 6	*Note 10*	*Note 2*
Forgings/ Bar stock	*SB-564 N06022* 6	*Note 10*	*N/A*
Gaskets	*EPDM*	*Note 13*	*N/A*
Bolting	*SA-193 Gr. B8M / SA-194 Gr. 8M*	*N/A*	*N/A*
Eductor	*A351-CF8M* 6	*N/A* 6	*N/A* 6

Miscellaneous Data

Orientation	*Vertical*	Support Type	*Skirt*
Insulation Function	*Not Applicable*	Insulation Material	*Not Applicable*
Insulation Thickness (inch)	*Not Applicable*	Internal Finish	*Descaled as laid*
		External Finish	*Note 3*

BECHTEL	**MECHANICAL DATA SHEET: VESSEL**	**PLANT ITEM No.** *24590-LAW-MV-LOP-VSL-00001*

Remarks

** To be determined by the vendor.*

Note 1: Material shall have Carbon Content of 0.030% Max. Non-welded specialty items are excluded from this requirement.

Note 2: Nozzle necks below normal operating level are Primary, others Auxiliary. See PVDF and vessel drawing for NDT.

Note 3: Shell welds under half pipe coils to be ground smooth. Others descaled as laid.

Note 4: Contents of this document are Dangerous Waste Permit affecting.

Note 5: Corrosion allowance of 0.01" is also to be added to the external surface of shell under the jacket.

Note 6: Use SA-240 316 material for skirt and base chair gussets as design change by SDDR No. 24590-WTP-SDDR-PROC-04-00936.

Note 7: Use Hastelloy C-276 in lieu of Hastelloy C-22 material for removable eductor guide cone as reference by SDDR No. 24590-WTP-SDDR-PROC-04-01080.

Note 8: Reference 24590-QL-POB-MVA0-00002-01-01. Operating and Test weights do not include pumps.

Note 9: See 24590-QL-POB-MVA0-00002-03-11.

Note 10: See 24590-QL-POB-MVA0-00002-01-01 and 24590-QL-POB-MVA0-00002-01-02.

Note 11: For vessel operating pressure and temperature see 24590-LAW-MEC-LOP-00006, Section 8, Lines 1 and 3.

Note 12: Nozzle loads shall not exceed that shown in 24590-QL-POB-MVA0-00002-03-09.

Note 13: Gasket material and dimensions are per 24590-QL-POB-MVA0-00002-01-02 and 24590-QL-POB-MVA0-00002-01-08.

Note 14: Average Contact Dose Rate for 21+ years per 24590-WTP-Z0C-W13T-00010, Rev. F, Table 8.1, Streams LOP01, LOP04, LOP04a, LOP05_1, and LOP05_2.

6

Approval

Rev	Description	System Engr	Vessel Engr	Checked	Reviewed	Approved	Date
0	Issue for Purchase	J. Rewari	S.L. Lee	E. Isern/ C. Slater	N/A	S. Kirk	10/21/02
1	Revised to incorporate the SDDR-PROC-03-0215 & SDDR-PROC-03-0216	J. Rewari	S.L. Lee	E. Isern/ C. Slater	N/A	M. Hoffmann	10/16/03
2	Revised the External Pressure and Delete the Process Data Sheet	J. Rewari	S.L. Lee	M.Sanvictors /C. Slater	E. Isern	M. Hoffmann	12/22/03
3.	Revised as noted & issued for Purchase	S. Sourani	S.L. Lee	M.Sanvictors /C. Slater	Ed.Donoso /D. Adler	M. Hoffmann	05/09/04
4.	Revised as noted & issued for Purchase	S. Sourani	S.L. Lee	M.Sanvictors /C. Slater	Ed.Donoso /D. Adler	M. Hoffmann	10/19/04
5.	Revised as noted & incorporated SDDR no. 24590-WTP-SDDR-PROC-04-00936 & 24590-WTP-SDDR-PROC-04-01080	S. Sourani	S.L. Lee	M.Sanvictors /C. Slater	Ed.Donoso /D. Adler	M. Hoffmann	02/06/05
6.	Revised eductor tag number, P&ID number, quality level, vessel volumes, and vessel operating pressures and temperature. Added vessel actual weights and test pressures. Removed cyclic data sheet (previously deleted under Revision 5). Added Notes. Incorporated and revised data from 24590-LAW-M6N-M80T-00008.	M. O'Neill	N/A	R. Tometczak	B.S. Austen MET D. Adler	S. Kretzschmar	10/20/14

Please note that source, special nuclear, and byproduct materials, as defined in the Atomic Energy Act of 1954 (AEA) are regulated at the U. S. Department of Energy (DOE) facilities exclusively by DOE acting pursuant to its AEA authority. DOE asserts that pursuant to AEA, it has sole and exclusive responsibility and authority to regulate source, special nuclear, and byproduct materials at DOE-owned nuclear facilities. Information contained herein on radionuclides is provided for process description purposes only.

ISSUED BY
RPP-WTP PDC

R11683139

MECHANICAL DATA SHEET: VESSEL

PLANT ITEM No. 24590-LAW-MV-LOP-VSL-00002

Project:	RPP-WTP	P&ID:	24590-LAW-M6-LOP-00002002 6
Project No:	24590	Process Data Sheet:	
Project Site:	Hanford	Vessel Drawing	24590-LAW-MV-LOP-00002
Description:	LAW Melter 2 SBS Condensate Vessel		

Reference Data

Charge Vessels (Tag Numbers)	Not Applicable
Pulsejet Mixers / Agitators (Tag Numbers)	24590-LAW-MY-LOP-EDUC-00002 6
RFDs/Pumps (Tag Numbers)	Not Applicable

Design Data

Quality Level		Q 6	Fabrication Specs	24590-WTP-3PS-MV00-T0001 (PVDF)		
Seismic Category		SC-III	Design Code	ASME VIII Div 1		
Service/Contents		LAW Condensate	Code Stamp	Yes		
Design Specific Gravity		1.03	NB Registration	Yes		
Maximum Operating Volume	gal	7,325 6	Weights (lbs)	Empty	Operating	Test
Total Volume	gal	8,944 6	Estimated	25,500	91,700	100,800
			Actual *	23,000 (Note 8) 6	102,000 (Note 8) 6	98,000 (Note 8) 6
Average Dose Rate		2.10 x 10⁻¹ Rad/hr (Note 14) 6				

Inside Diameter	inch	144			Wind Design	Not Required	
Length/Height (TL-TL)	inch	98			Snow Design	Not Required	
		Vessel Operating (Note 11)	Vessel Design	Coil/Jacket Design	Seismic Design	24590-WTP-3PS-MV00-T0002 24590-WTP-3PS-FB01-T0001	
Internal Pressure	psig	-1.7	15	125	Seismic Base Moment *	ft*lb	Note 9 6
External Pressure	psig	1.7 6	15 6	15 6	Postweld Heat Treat	Not Required	
Temperature	°F	122	237	237	Corrosion Allowance	Inch	0.08 vessel (Note 5), 0.04 Jacket
Min. Design Metal Temp.	°F	40			Hydrostatic Test Pressure *	psig	20 vessel 163 cooling coils 6

Materials of Construction

Component	Material	Minimum Thickness / Size	Containment
Top Head	SB-575 N06022	Note 10	Auxiliary
Shell	SB-575 N06022	Note 10	Primary
Bottom Head	SB-575 N06022	Note 10	Primary
Support	SA-240 304 (Note 1 & 6)	Note 10	N/A
Jacket/Coils/Half-Pipe Jacket	SA-312 304 (Note 1)	Note 10	N/A
Internals	SB-575 N06022 / SB-622 N06022 (Note 7)	Note 10 6	Thermowells Primary
Pipe (Seamless)	SB-622 N06022 / SA-312 TP304 6	Note 10	Note 2
Forgings/ Bar stock	SB-564 N06022 6	Note 10	N/A
Gaskets	EPDM	Note 13	N/A
Bolting	SA-193 Gr. B8M / SA-194 Gr. 8M	N/A	N/A
Eductor	A351-CF8M 6	N/A 6	N/A 6

Miscellaneous Data

Orientation	Vertical	Support Type	Skirt
Insulation Function	Not Applicable	Insulation Material	Not Applicable
Insulation Thickness (inch)	Not Applicable	Internal Finish	Descaled as laid
		External Finish.	Note 3

BECHTEL	**MECHANICAL DATA SHEET: VESSEL**	**PLANT ITEM No.** *24590-LAW-MV-LOP-VSL-00002*

Remarks

** To be determined by the vendor.*

Note 1: *Material shall have Carbon Content of 0.030% Max. Non-welded specialty items are excluded from this requirement.*

Note 2: *Nozzle necks below normal operating level are Primary, others Auxiliary. See PVDF and vessel drawing for NDT.*

Note 3: *Shell welds under half pipe coils to be ground smooth. Others descaled as laid.*

Note 4: *Contents of this document are Dangerous Waste Permit affecting.*

Note 5: *Corrosion allowance of 0.01" is also to be added to the external surface of shell under the jacket.*

Note 6: *Use SA-240 316 material for skirt and base chair gussets as design change by SDDR No. 24590-WTP-SDDR-PROC-04-00936.*

Note 7: *Use Hastelloy C-276 in lieu of Hastelloy C-22 material for removable eductor guide cone as reference by SDDR No. 24590-WTP-SDDR-PROC-04-01080.*

Note 8: *Reference 24590-QL-POB-MVA0-00002-01-03. Operating and Test weights do not include pumps.*

Note 9: *See 24590-QL-POB-MVA0-00002-03-12.*

Note 10: *See 24590-QL-POB-MVA0-00002-01-03 adn 24590-QL-POB-MVA0-00002-01-04.*

Note 11: *For vessel operating pressure and temperature see 24590-LAW-MEC-LOP-00006, Section 8, Lines 1 and 3.*

Note 12: *Nozzle loads shall not exceed that shown in 24590-QL-POB-MVA0-00002-03-10.*

Note 13: *Gasket material and dimensions are per 24590-QL-POB-MVA0-00002-01-04 and 24590-QL-POB-MVA0-00002-01-10.*

Note 14: *Average Contact Dose Rate for 21+ years per 24590-WTP-Z0C-W13T-00010, Rev. F, Table 8.1, Streams LOP01, LOP04, LOP04a, LOP05_1, and LOP05_2.*

6

Approval

Rev	Description	System Engr	Vessel Engr	Checked	Reviewed	Approved	Date
0	Issue for Purchase	J. Rewari	S.L. Lee	E. Isern/ C. Slater	N/A	S. Kirk	10/21/02
1	Revised to incorporate the SDDR-PROC-03-0215 & SDDR-PROC-03-0216	J. Rewari	S.L. Lee	E. Isern/ C. Slater	N/A	M. Hoffmann	10/16/03
2	Revised the External Pressure and Delete the Process Data Sheet	J. Rewari	S.L. Lee	M.Sanvictors /C. Slater	E. Isern	M. Hoffmann	12/22/03
3.	Revised as noted & issued for Purchase	S. Sourani	S.L. Lee	M.Sanvictors /C. Slater	Ed.Donoso /D. Adler	M. Hoffmann	05/09/04
4.	Revised as noted & issued for Purchase	S. Sourani	S.L. Lee	M.Sanvictors /C. Slater	Ed.Donoso /D. Adler	M. Hoffmann	10/19/04
5.	Revised as noted & incorporated SDDR no. 24590-WTP-SDDR-PROC-04-00936 & 24590-WTP-SDDR-PROC-04-01080	S. Sourani	S.L. Lee	M.Sanvictors /C. Slater	Ed.Donoso /D. Adler	M. Hoffmann	02/06/05
6.	Revised eductor tag number, P&ID number, quality level, vessel volumes, and vessel operating pressures and temperature. Added vessel actual weights and test pressures. Removed cyclic data sheet (previously deleted under Revision 5). Added Notes. Incorporated and revised data from 24590-LAW-M6N-M80T-00008.	M. O'Neill	N/A	R. Tometczak	B.S. Austen MET D. Adler	S. Kretzschmar	10/20/14

Please note that source, special nuclear, and byproduct materials, as defined in the Atomic Energy Act of 1954 (AEA) are regulated at the U. S. Department of Energy (DOE) facilities exclusively by DOE acting pursuant to its AEA authority. DOE asserts that pursuant to AEA, it has sole and exclusive responsibility and authority to regulate source, special nuclear, and byproduct materials at DOE-owned nuclear facilities. Information contained herein on radionuclides is provided for process description purposes only.

Table III.10.E.B – LAW Vitrification Plant Tank Systems Description

Dangerous and/or Mixed Waste Tank Systems Name	Unit Designation	Engineering Description (Drawing Nos, Specification Nos, etc.)	Narrative Description, Tables & Figures	Maximum Capacity (gallons)
LAW Secondary Off-gas/Vessel Vent Process System LVP-TK-00001 (LAW Caustic Collection Tank)	LVP	**24590-LAW** -M5-V17T-P0011, Rev 1 -P1-P01T-00004, Rev 5 -VDCN-M-13-00001 -MTD-LVP-00001, Rev 1 -N1D-LVP-00002, Rev 2	Section 4.1.3.3; Tables 4-3 and 4-6; and Figures C1-1 and C1-3 of Operating Unit Group 10, Addendum C of this Permit.	LVP-TK-00001 = 14,232
LAW Primary Off-gas Process System LOP-VSL-00001 (LAW Melter 1 SBS Condensate Vessel) LOP-VSL-00002 (LAW Melter 2 SBS Condensate Vessel)	LOP	**24590-LAW** -M5-V17T-P0007, Rev 0 -M5-V17T-P0008, Rev 0 -M6-LOP-P0001, Rev 2 -M6-LOP-P0002, Rev2 -MV-LOP-P0001, Rev 0 -MV-LOP-P0002, Rev 0 -MVD-LOP-~~P~~00004, Rev ~~1~~6 -MVD-LOP-~~P~~00005, Rev ~~1~~6 -N1D-LOP-00002, Rev 3 -P1-P01T-00002, Rev 7	Section 4.1.3.3; Tables 4-3 and 4-6; and Figures C1-1 and C1-3 of Operating Unit Group 10, Addendum C of this Permit.	LOP-VSL-00001 = 9,056 LOP-VSL-00002 = 9,056
LAW Vitrification Plant Radioactive Liquid Waste Disposal System	RLD	**24590-LAW** -M5-V17T-P0014, Rev 2	Section 4.1.3.4; Tables 4-3 and 4-6; and Figures C1-1 and C1-3 of	RLD-VSL-00003 = 25,780

Table III.10.H.A - LAW Plant Miscellaneous Unit System Description

Sub-system Description	Sub-system Designation	Engineering Description (Drawing Nos., Specification Nos., etc.)	Narrative Description, Tables and Figures
LOP-SCB-00002 (Melter 2 Submergered Bed Scrubber)		-MK-LOP-P0001001, Rev 0 -MK-LOP-P0001002, Rev 0 -MK-LOP-P0001003, Rev 0 -MKD-LOP-P0008, Rev 0 -NID-LOP-P0001, Rev 1 -P1-P01T-00002, Rev 7	
LAW Primary Offgas Process System (Cont.) LOP-WESP-00001 (Melter 1 Wet Electrostatic Precipitator - WESP) LOP-WESP-00002 (Melter 2 Wet Electrostatic Precipitator -WESP)	LOP	**24590-LAW** -M5-V17T-P0007, Rev 0 -M5-V17T-P0008, Rev 0 -M6-LOP-00001004, Rev ~~0~~1 -M6-LOP-00002004, Rev ~~0~~1 -NID-LOP-00003, Rev 3 -P1-P01T-00002, Rev 7 **24590-WTP** -3PS-MKE0-T0001, Rev 5	Section 4.1.3.3, Table C-8, and Figures C1-1 and C1-3 in Operating Unit Group 10, Addendum C of this Permit.
LAW Secondary Offgas/Vessel Vent Process System LVP-HEPA-00001A (Melter Offgas HEPA Filter) LVP-HEPA-00001B (Melter Offgas HEPA Filter) LVP-HEPA-00002A (Melter Offgas HEPA Filter)	LVP	**24590-LAW** -M5-V17T-00010, Rev 4 -M6-LVP-00001003, Rev 0 -P1-P01T-00005, Rev 4	Section 4.1.3.3, Table C-8, Figures C1-1 and C1-3 in Operating Unit Group 10, Addendum C of this Permit.