SGW-58434
Revision 0

Description of Work for the Installation of Four Monitoring Wells at the Solid Waste Landfill and Non-Radioactive Waste Disposal Landfill, FY2015

Prepared for the U.S. Department of Energy
Assistant Secretary for Environmental Management

Contractor for the U.S. Department of Energy
under Contract DE-AC06-08RL14788

CH2MHILL
Plateau Remediation Company
P.O. Box 1600
Richland, Washington 99352

Approved for Public Release;
Further Dissemination Unlimited

SGW-58434
Revision 0

Description of Work for the Installation of Four Monitoring Wells at the Solid Waste Landfill and Non-Radioactive Waste Disposal Landfill, FY2015

Document Type: RPT

A. Lantau
CH2M HILL Plateau Remediation Company

T. Clark
CH2M HILL Plateau Remediation Company

Date Published
January 2015

Prepared for the U.S. Department of Energy
Assistant Secretary for Environmental Management

Contractor for the U.S. Department of Energy
under Contract DE-AC06-08RL14788

CH2MHILL
Plateau Remediation Company
P.O. Box 1600
Richland, Washington 99352

APPROVED
By Ashley R Jenkins at 7:31 am, Jan 28, 2015

Release Approval | Date

Approved for Public Release;
Further Dissemination Unlimited

TRADEMARK DISCLAIMER

Reference herein to any specific commercial product, process, or service by tradename, trademark, manufacturer, or otherwise, does not necessarily constitute or imply its endorsement, recommendation, or favoring by the United States Government or any agency thereof or its contractors or subcontractors.

This report has been reproduced from the best available copy.

Printed in the United States of America

Contents

1. Scope of Work 1

2. Background 3

2.1 Site History 3

2.2 Site Stratigraphy and Hydrogeology 3

2.2.1 Stratigraphic Setting 3

2.2.2 Hydrogeology 4

2.3 Contaminants of Potential Concern 5

3. Description of Work Activities 7

3.1 Well Site Preparation 7

3.2 Drilling 7

3.3 Sampling Requirements 8

3.4 Borehole Geophysical Logging 9

3.5 Well Construction 9

3.5.1 Screen Riser and Sump 9

3.5.2 Annular Seal & Filter Pack 10

3.5.3 Wellhead 10

3.6 Well Development 15

3.6.1 Initial Well Development 15

3.6.2 Final Well Development 15

3.7 Final Report 16

4. Waste Management 17

5. Quality Assurance 18

6. General Requirements 19

6.1 Safety & Health 19

6.2 Technical Procedures/Specifications 19

7. Project Documentation 22

8. References 23

Tables

Table 1 - Well Identification and Location Summary 2
Table 2 - Geologic Contacts, Depth to Water, and Estimated Total Depth for the Wells 5
Table 3 - Contaminants of Potential Concern 6
Table 4 - Proposed Summary of Well Construction 12

Figures

Figure 1 - Proposed New Well Locations 2
Figure 2 - Conceptual Monitoring Well Design 13
Figure 3 - Diagram Showing Configuration of Access Port in Protective Casing 14

ACRONYMS

ags	above ground surface
bgs	below ground surface
BTR	Buyer's Technical Representative
CERCLA	*Comprehensive Environmental Response, Compensation, and Liability Act of 1980*
CFR	*Code of Federal Regulations*
CHPRC	CH2M Hill Plateau Remediation Company
CGET	CHPRC General Employee Training
DOE	U.S. Department of Energy
DOW	Description of Work
EPA	U.S. Environmental Protection Agency
ft	foot (feet)
FY	Fiscal Year
gpm	gallons per minute
HASQARD	Hanford Analytical Services Quality Assurance Requirements Document
ID	Identification
in	inch(es)
lb	pound
m	meter(s)
NRDWL	Nonradioactive Dangerous Waste Landfill
OU	Operable Unit
QA	Quality Assurance
RCRA	*Resource Conservation and Recovery act of 1976*
SWL	Solid Waste Landfill
TD	total depth
WAC	*Washington Administrative Code*
WDOH	Washington Department of Health

1. Scope of Work

This description of work (DOW) presents performance details and controls for field activities associated with the installation, sampling, and testing of four (4) replacement groundwater monitoring wells during fiscal year (FY) 2015 adjacent to the Nonradioactive Dangerous Waste Landfill (NRDWL) and the Solid Waste Landfill (SWL) located approximately two miles southeast of the 200 East Area. The NRDWL and SWL are collectively referred to as the 600 Area Central Landfill. Two of the wells will be installed immediately east of the NRDWL and two of the wells will be installed immediately east of the SWL. All four of the new wells will be installed to replace existing groundwater monitoring wells that have gone sample-dry or have gone nearly sample-dry.

The SWL and its associated monitoring wells are regulated by Washington State Department of Ecology *Washington State Administrative Code* (WAC) 173-160 "Minimum Functional Standards for Solid Waste Handling". The NRDWL and its adjacent wells are regulated under the *Resource Conservation and Recovery act of 1976* (RCRA). The four wells are being replaced to maintain compliance with WAC 173-303, "Dangerous Waste Regulations." The NRDWL and the SWL groundwater monitoring well networks are present to support the *Groundwater Monitoring Plan for the Solid Waste Landfill* (PNNL-13014) and the *Groundwater Monitoring Plan for the Nonradioactive Dangerous Waste Landfill* (PNNL-12227).

The scope of work for the installation of the replacement wells will include well drilling, well-construction and development. Drilling activities will consist of advancing four cased boreholes to approximately 170 feet (ft) below ground surface (bgs). Well construction activities will consist of the installation of 4-inch (in) diameter stainless steel monitoring wells with 30 ft screens set 25 ft below the water table, extending 5 ft above the water table, with 3-ft sumps. Development will include surging the well screen during sand pack installation and over-pumping after the well has been built. The water table is estimated to be at roughly 138 ft bgs.

Wells 699-26-33A (C9404) and 699-25-34F (C9405) will be drilled along the east boundary of the NRDWL and are replacing sample-dry, or near sample-dry, wells 699-26-33 and 699-25-34A, respectively. Wells 699-24-34D (C9406) and 699-24-34E (C9407) will be drilled along the east boundary of the SWL and will replace sample-dry, or near sample-dry, wells 699-24-34A and 699-24-34B, respectively. Table 1 lists the new wells identification numbers, names, locations and their replacement wells.

All drilling, decommissioning, and well construction will be performed by a drilling subcontractor. Sampling and testing will be performed by CH2M Hill Plateau Remediation Company (CHPRC) and affiliates. Figure 1 illustrates the location of the 4 new wells.

Table 1 - Well Identification and Location Summary

Well ID	Well Name	Associated Waste Site	Easting (m)	Northing (m)	Replacement Well
C9404	699-26-33A	NRDWL	579710.75	131283.6	699-26-33
C9405	699-25-34F	NRDWL	579693.91	131227.63	699-25-34A
C9406	699-24-34D	SWL	579523.69	130672.89	699-24-34A
C9407	699-24-34E	SWL	579554.14	130775.17	699-24-34B

m = meters

Figure 1 - Proposed New Well Locations

2. Background

The following section discusses previous work activities and regulatory decisions associated with the NRDWL and SWL. General summaries of the site geology, hydrogeology, and contaminants-of-concern relevant to the planned wells are presented.

All measurements in this document will be listed in English standard notation.

2.1 Site History

The 600 Area Central Landfill is located southeast of the 200 East Area off of Army Loop Road. The Central Landfill consists of the SWL and adjoining NRDWL. The SWL was a nonradioactive dump site used between 1973 and 1976. The dump site, when in operation, received mostly solid waste in the form of paper, construction materials, and asbestos. Sewage and garage wash water were also disposed of the in SWL. The SWL and tenement monitoring well network are regulated by Washington State Department of Ecology. The NRDWL was a disposal facility that received nonradioactive dangerous waste and asbestos waste between 1978 and 1985. The NRDWL and its monitoring well network are regulated under RCRA as a Treatment, Storage and Disposal facility. Volatile organic compounds are the primary contaminants-of-concern at these waste sites.

2.2 Site Stratigraphy and Hydrogeology

The following section summarizes the general stratigraphic setting and hydrogeologic conditions in the vicinity of the new wells.

2.2.1 Stratigraphic Setting

The local geology has been described in detail in several documents, including:

- Open File Report 96-8, *The Miocene to Pliocene Ringold Formation and Associated Deposits of the Ancestral Columbia River System, South-Central Washington and North-Central Oregon*
- DOE/RL-2004-60, *200-SW-1 Nonradioactive Landfills Group and 200-SW-2 Radioactive Landfills Group Operable Units Remedial Investigation/Feasibility Study Work Plan*
- DOE/RL-2002-39*; Standardized Stratigraphic Nomenclature for the Post-Ringold-Formation Sediments Within the Central Pasco Basin*
- PNNL-12261, 2000, *Revised Hydrogeology for the Suprabasalt Aquifer System, 200-East Area and Vicinity, Hanford Site, Washington*

The stratigraphic conditions of the 600 Areas are consistent with the regional stratigraphy of the Hanford Site, consisting of unconsolidated sedimentary deposits that overlie the older Columbia River Basalt Group flood basalts.

The stratigraphy in the 600 Areas of the Hanford Site consists of unconsolidated late Miocene to Holocene sedimentary deposits that overlie the Miocene Columbia River Basalt Group (CRBG)

flood basalts and associated sedimentary interbeds. The stratigraphic sequence, in ascending order, is listed below.

- The Elephant Mountain Member of the Saddle Mountain Formation of the CRBG occurs beneath the project area and is the uppermost basalt unit in the project area. This basalt unit has a variable elevation throughout the project area due to folding and erosion. The Elephant Mountain Member basalt consists of two separate basalt flows and would likely be over 100 ft thick in the project area. An extensive sequence of older basalt layers and interbeds of the CRBG underlie these upper basalt flows.

- The Ringold Formation consists of interbedded, unconsolidated-to-cemented clay, silt, sand, and granule- to cobble gravel that disconformably overlies the Columbia River Basalt Group. It was deposited by the ancient Columbia and Clearwater-Salmon Rivers as they migrated eastward across the Site from the late Miocene to early Pliocene. The Ringold Formation underlying the 600 Area Central Landfill includes three major Units. Unit A lies atop bedrock and consist of fluvial main stream deposits of felsic dominant, very-well rounded sandy granule- to cobble gravels. The Ringold Lower Mud Unit overlays Unit A and consists of fine-grained overbank flood deposits including clays, silts and sand. Unit E overlays the Lower Mud Unit and consists of sub-well rounded felsic dominant, silty sandy granule- to cobble gravel (PNNL-12261). Ringold Unit E is not expected to be fully penetrated under this scope of work.

- The Cold Creek unit (CCU) includes the sedimentary sequence that disconformably overlies the Ringold Formation and underlies cataclysmic flood deposits of the Hanford formation. The CCU includes those deposits formerly referred to as the "Plio-Pleistocene unit" and "pre-Missoula Gravels," as well as the "early Palouse soil" and "caliche" (DOE/RL-2002-39). In the 600 area, the CCU is mainly eolian deposits, calcic paleosol, sidestream alluvial deposits, or mainstream alluvium (DOE/RL-2004-60).

- The Hanford formation is the informal name given to Pleistocene-age cataclysmic flood deposits in the Pasco Basin. The Hanford formation consists predominantly of unconsolidated sediments that cover a wide range in grain size from pebble- to boulder-gravel, fine- to coarse-grained pebbly sand to sand, silty sand, and silt. Gravel clasts are composed of mostly subangular to subrounded basalt (DOE/RL-2002-39).

- Surficial deposits include Holocene eolian sheets of sand that form a thin veneer over the Hanford formation across the site, except in localized areas where the deposits are naturally absent or absent due to anthropogenic activities. Surficial deposits consist of very fine- to medium-grained sand to occasionally silty sand. Fill material was placed in and over landfills as cover and for contamination control. The fill consists of reworked Hanford formation sediments and/or surficial sand and silt.

2.2.2 Hydrogeology

The vadose zone consists of unconsolidated sediments including Holocene surficial deposits and sediments of the Hanford formation, the Cold Creek Unit, and a portion of the Ringold Unit E. The unconfined aquifer occurs primarily within the Cold Creek Unit and Ringold Unit E

sediments. The Ringold Lower Mud unit in the NRDWL/SWL areas acts as a locally semiconfining unit overlying a confined aquifer comprised of Ringold A sediments. The bottom of the confined aquifer is immediately below the vesicular and fractured basalt top. The depth to groundwater is expected to be between approximately 138.5 to 140 ft bgs at the NRDWL/SWL.

Table 2 provides a listing of estimated contact depths based on contour maps developed from the nearest available well logs. Boreholes are not anticipated to extend below Ringold Formation Unit E sediments.

Table 2 - Geologic Contacts, Depth to Water, and Estimated Total Depth for the Wells

Well ID	DTW (ft bgs)	Hanford Fm (ft bgs)	Cold Creek Depth (ft bgs)	Ringold Fm Unit E (ft bgs)	Ringold Fm Lower Mud (ft bgs)	Ringold Fm Unit A (ft bgs)	Basalt (ft bgs)
C9404	140	0-119	119	164	366	488	588
C9405	139	0-118	118	163	365	487	587
C9406	138.5	0-117	117	162	364	486	586
C9407	138.5	0-117	117	162	364	486	586

DTW = Depth to water
Fm = Formation
ft bgs = feet below ground surface

2.3 Contaminants of Potential Concern

The NRDWL and the SWL contaminants of potential concern are discussed in the groundwater monitoring plans, PNNL-13014 and PNNL-12227. The list of contaminants of potential concern is presented in Table 3.

Table 3 - Contaminants of Potential Concern

SWL		NRDWL	
1,1,1-Trichloroethane	Nitrate	1,1,1-Trichloroethane	Manganese
1,1-Dichloroethane	pH Measurement	1,1-Dichloroethane	Nitrate
1,1-Dichloroethene	Phenols	1,2-Dichloroethane	Nitrite
1,2-Dichloroethane	Sodium	1,4-Dichlorobenzene	pH Measurement
1,4-Dichlorobenzene	Specific Conductance	1,4-Dioxane	Specific Conductance
Carbon tetrachloride	Sulfate	Ammonium ion	Sulfate
Chloride	Tetrachloroethene	Antimony	Temperature
Chlorobenzene	Total organic carbon	Arsenic	Tetrachloroethene
Chloroform	Total organic halides	Carbon tetrachloride	Total organic carbon
cis-1,2-Dichloroethylene	trans-1,2-Dichloroethylene	Chemical Oxygen Demand	Trichloroethene
Iron	Trichloroethene	Chloride	Zinc
Manganese	Vinyl chloride	Coliform Bacteria	
Methylene chloride		Iron	

Contaminants of Potential Concern taken from:
PNNL-12772 and PNNL-13014

3. Description of Work Activities

Activities to be conducted at each well site include site preparation, drilling, sampling, well construction, and well development. All activities described in this document will be conducted in accordance with the guidelines and requirements set forth in "Drilling, Remediating, and Decommissioning Resource Protection Wells, and Geotechnical Soil Borings" (SGRP-PRO-EN-50030) and shall conform to minimum resource protection well standards as defined in WAC-173-160, "Minimum Standards for Construction and Maintenance of Wells". The WDOH (2008), *The Department of Energy Hanford Site Radioactive Air Emissions License #FF-01*, Enclosure 3, "ALARACT Agreements," ALARACT 18, "Environmental Restoration Program ALARACT Demonstration for Drilling," shall also apply. All drilling and well construction work will be performed by a licensed drilling subcontractor. Information for major subtasks is included in the following sections.

3.1 Well Site Preparation

The new wells are located along the east edge of the NRDWL and the SWL site boundaries. Access to the landfills and wells will be via the intersection of Army Loop Road and Route 63 located roughly two miles east of the 200 East Area. Wells C8904 and C8905 are staked on the east edge of the NRDWL. Wells C8906 and C8907 are staked at the east edge of the SWL.

Each well has been staked and assigned a unique well number and name. Drilling sites will be accessed by existing roads. Grub surveys have been performed by radiation control technicians for each site as necessary. Ground penetrating radar surveys have also been conducted as necessary and excavation permits obtained as part of site preparation prior to drilling.

3.2 Drilling

The drilling contractor will be responsible for complying with well drilling and construction standards defined in WAC 173-160 and applicable CHPRC procedures. The drill rig and all down-hole equipment shall be pressure-washed prior to use between wells, including all wells located within the same waste management area, to minimize potential for cross-contamination. Decontamination process is further identified in SGRP-PRO-RP-50023, *Field Cleaning and/or Decontamination of GeoProbe®[1] and Drilling Equipment*. An environmentally-compatible non-petroleum lubricant, such as Jet-Lube Well-Guard®[2] thread compound or equivalent, may be used for lubricating the threads of the stainless steel and casing during installation activities.

All four of the boreholes will be drilled to approximately 170 ft bgs using temporary casing of sufficient diameter to accommodate the construction standards for specific well types. Temporary casing at total depth (TD) shall be no less than 8-in diameter, nominal, to allow completion of 4-in diameter permanent wells with 2-in annulus per WAC 173-160. The final depth of the wells will be determined by the CHPRC delegate and may vary from anticipated depths depending on the varying hydrogeologic conditions encountered. Water is anticipated to be encountered between 137 and 139 ft bgs.

---

[1] GeoProbe®[1] is a registered trademark, of Kejr, Inc., Salina KS.

[2] Jet-Lube Well-Guard® is a registered trademark of Jet-Lube, Inc. of Houston, TX.

Any combination of the drilling methods describe in the Well Drilling Services Basic Ordering Agreement PART I Article 3.2 may be utilized at an individual well/boring location. The boreholes are to be drilled through unconsolidated clays, silts, gravel, boulders, semiconsolidated materials, or hard cemented zones containing these materials. The Drilling Contractor's selected equipment and methods shall be capable of advancing through the anticipated geologic formations, and maintaining an open, straight, borehole, free of drilling cuttings and other obtrusive materials to the depth explored and at individually selected sampling depths, as applicable. In addition, the Contractor's selected equipment and method shall be capable of installing and removing all temporary casing. Drilling aids such as bentonite, other clay-based agents, water, or any foreign matter capable of affecting the characteristics of the sediment samples or ground water will not be placed in the borehole without prior consent of the CHPRC BTR and/or project technical leads.

During drilling and sampling all reasonable efforts shall be made to minimize, or eliminate, the addition of water to the borehole. If water addition is necessary, the volume added should be kept to the smallest volume required and only added with the approval of the buyer's technical representative (BTR) or project technical lead. Only potable water shall be added during drilling. Water addition of one to three gallons should be sufficient to facilitate drilling and/or sampling. If conditions indicate the need for water addition in greater volumes, the field personnel will contact the project technical lead for direction. Added water volumes will be accurately recorded in the geologist and drilling log, including volume added and depth interval.

Drilling activities for all four wells have been evaluated to pose low radiological risk based on the site histories, sampling of nearby waste sites and existing wells. Radiological-control support is anticipated to consist of daily "AM/PM" checks as long as current radiological risks remain unchanged. Any other coverage will be specified under the radiological hazards screening form.

The planned frequency for Industrial Hygiene (IH) monitoring will be twice daily (i.e. AM/PM) during drilling activities for volatile organic compounds (VOCs) and ammonia. Continued IH support for well construction and development activities will be contingent upon data obtained during drilling. Additional sampling and monitoring may be required by the Industrial Hygienist based on monitoring results, work activities conducted, and environmental conditions.

3.3 Sampling Requirements

Sampling will include archive sampling and sieve sampling only. No samples for analytical chemical analyses will be collected since these boreholes are replacement holes for previously sampled borings. The driller shall be responsible for maintaining an independent log of major changes in cuttings in accordance with WAC 173-160. The field geologist will be responsible for logging the cuttings to the specifications called out in SGRP-PRO-EN-50025, *Geologic Logging*.

Grab samples for archive purposes will be collected from drill cuttings at 5-ft intervals throughout the borehole, at discernible changes in lithology, and at any depth where any unusual conditions occur. Grab samples will be collected in one-pint glass jars and chip trays for archive purposes. Archive samples will not be collected if contamination is encountered.

Throughout the saturated zone, grab samples will be split to be used for archive purposes and for sieve analysis. The portion of the sample that will be used for sieve analysis will be composited into a plastic bag. Sieve analyses shall be conducted in accordance with SGRP-PRO-OP-50037, *Particle Size Distribution of Soil-Wet Sieve Analysis*.

The planned groundwater wells will be logged for geophysical response with a high-resolution, spectral gamma-ray logging system to determine the vertical distribution and concentration of gamma-emitting radionuclides. Soil moisture will be determined using neutron-moisture logging system. The monitoring wells will be logged before the temporary casing is telescoped (if applicable) and/or at the point of total depth.

A record of well site field activities will be maintained by the buyer's representative field geologist and recorded in daily field activity reports.

3.4 Borehole Geophysical Logging

Geophysical logging will be performed by others through each single string of casing (i.e. before telescoping) to produce a geophysical log of the entire length of the borehole. A Spectral Gamma Logging System will be run from ground surface to the TD of the borehole for all four monitoring wells to determine the vertical distribution and concentration of gamma emitting radionuclides. A Neutron-Moisture Logging System will also be run from ground surface to the top of the water table for all four new wells to determine soil moisture, neutron density, and porosity.

3.5 Well Construction

Well construction shall meet the minimum standards required by WAC 173-160, Part II for construction of resource protection wells, unless a state approved variance is utilized. The drilling contractor will be responsible for performing a straightness test prior to beginning well completion as required by WAC 173-160. The test will be conducted using a 20-ft long solid section of pipe with a diameter no less than 1-in smaller than the inner diameter of the temporary casing. The tester must be lowered to the bottom of the borehole and returned without binding. The straightness test shall be performed in the presence of the CHPRC BTR or delegate.

Table 4 provides a summary of anticipated well construction parameters including estimated water levels, borehole depths, screen intervals, filter-pack intervals, bentonite-seal intervals, and cement-seal intervals. The conceptual schematic of the monitoring wells is provided as Figure 2 below.

3.5.1 Screen Riser and Sump

The wells will consist of a 4-in diameter permanent riser pipe, screen and sump. The casing and sump will be constructed of flush-joint threaded pipe of Type 304/304L or 316/316L, Schedule 10 stainless steel with O-rings. The screens will be 30 ft long of continuous-wrap V-wire design of Type 304/304L or 316/316L stainless steel with flush-joint threaded couplers with O-rings. Sumps will be 3 ft long with welded end caps.

Screens are to extend 5 ft above ground water level to 25 ft below groundwater to capture future fluctuations in the groundwater table. The relatively long screen will accommodate regional

water level declines into the far future as the aquifer re-equilibrates to near pre-Hanford water table levels. Based on adjacent wells recently built to the same depth as these newly proposed wells, screen aperture may be 0.040-in slot, but will be determined based on particle size analysis of the drill cuttings. Final screen placement, screen aperture, and filter pack size will be determined by the project technical lead in consultation with drilling BTR and/or CHPRC's field geologist/ hydrogeologist. The Contractor will obtain CHPRC approval before purchasing anticipated well screens and filter pack materials.

Stainless steel centering guides (centralizers) shall be placed both above and below the well screen and at 20 ft intervals throughout the length of screen. Stainless steel centering guides shall also be placed at 40-ft intervals above the top of the screen. Centering guides will not be required if the contractor specifies a drilling method that provides an equivalent centering effect for the permanent casing (such as Dual-Wall Percussion drilling).

3.5.2 Annular Seal & Filter Pack

The filter pack will consist of Colorado silica sand, or equivalent, and will extend from below the well sump up to 5 ft above the top of the screen (Figure 2). The mesh size of the filter pack for each of the new wells will be selected based on drill cutting particle size analysis (i.e. filter pack mesh size is chosen based on sieve analysis results; screen slot size is based on the mesh size where up to 10% of the filter pack is capable of passing into the screen). The Contractor shall place and settle the filter pack in no greater than 10 ft intervals using a dual-flange surge block. As a general rule, the filter pack will be considered sufficiently settled once it stops settling no more than 0.1 ft in 15 minutes.

While adding sand and pulling temporary casing, the well shall be held in tension to keep the well as straight as possible.

At a minimum, a 3-ft layer of bentonite pellets will be placed directly on top of the filter pack. Granular bentonite (i.e.: crumbles, chunks, chips, etc.) will be used to seal the remaining borehole above the filter pack to 10 ft bgs.

The remaining 10 ft of the boreholes shall be filled with cement grout to ground surface. Cement grout shall conform to standards called out in WAC 173-160 Part II and shall be made by mixing Type I/II Portland cement with no more than 6 gallons of potable water per 96-pound (lb) sack (or equivalent ratio) and no more than 5% bentonite powder.

3.5.3 Wellhead

Surface protection for each well will be installed in accordance with WAC 173-160-420, *General Construction Requirements for Resource Protection Wells*, and SGRP-PRO-EN-50030, and the design specified in the Contract Release. As shown in Figure 2, a minimum of 6-in diameter stainless steel protective casing shall be placed from 3 ft above ground surface (ags) to 2 ft bgs. The protective casing shall be fitted with a light weight (Schedule 10 stainless steel) lockable cap extending 11 inches above the protective casing. The well cap shall have two handles affixed near the top of the well cap and on opposing sides of the well cap. See Figure 2 for a conceptual well design.

A 4-ft square concrete pad, 6 inches thick with, at minimum, 16 gauge steel wire mesh reinforcement will be placed around the well monument. A brass/bronze marker will be placed in the north side of the cement pad. The marker shall be stamped in 3/8-in lettering with the well name, well ID number and completion date. Four protective posts (3-in diameter) will surround the pad, extending to 3 ft ags and be cemented at least 2 ft into the ground. One post will be removable for well access. Posts will be painted yellow as specified in the Contract Release.

A covered access port shall be provided on the protective casing and shall be configured as shown in Figure 3 to allow for a grounding lug for future well pump applications.

Permanent sampling pumps may be installed by CHPRCs well maintenance team after the wells are accepted by CHPRC from the Contractor.

Table 4 - Proposed Summary of Well Construction

Well ID	Well Name	Depth to Water (ft bgs)	Drill Depth (ft bgs)	Perm. Well Diameter (in)	Screen Interval (ft bgs)	Filter Pack Interval (ft bgs)	Bentonite Pellet Seal (ft bgs)	Bentonite Crumbles (ft bgs)	Cement Grout (ft bgs)
C9404	699-26-33A	140	170	4	165-135	170-130	130-127	127-10	10-0
C9405	699-25-34F	139	169	4	164-134	169-129	129-126	126-10	10-0
C9406	699-24-34D	138.5	169	4	164-134	169-129	129-126	126-10	10-0
C9407	699-24-34E	138.5	169	4	164-134	169-129	129-126	126-10	10-0

Note: Information presented on table are estimates. Final drill depth, position of well screen, backfill interval, filter pack interval, and bentonite seal intervals will be determined based on actual borehole conditions.

ft bgs = feet below ground surface

in = inch(es)

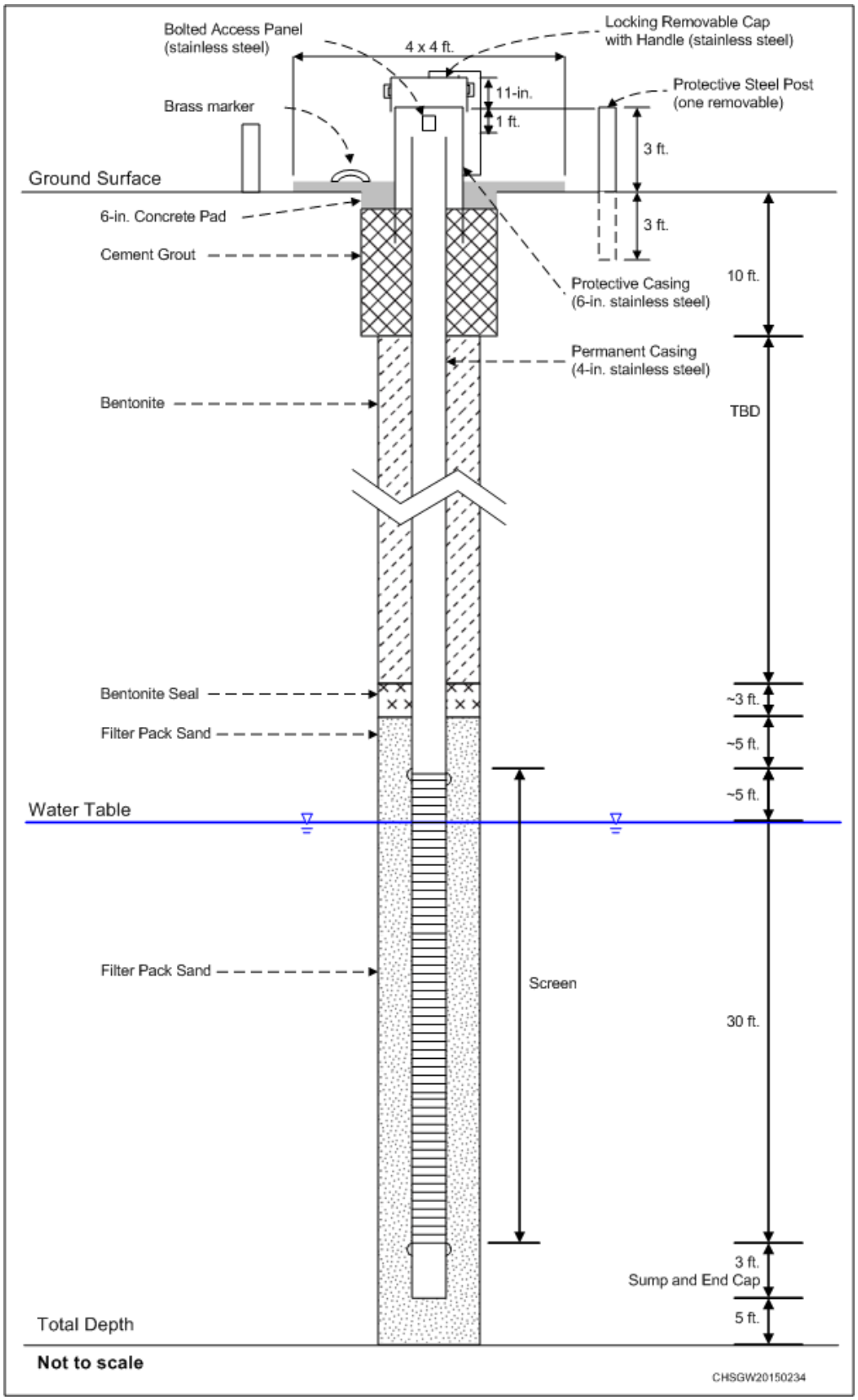

Figure 2 - Conceptual Monitoring Well Design

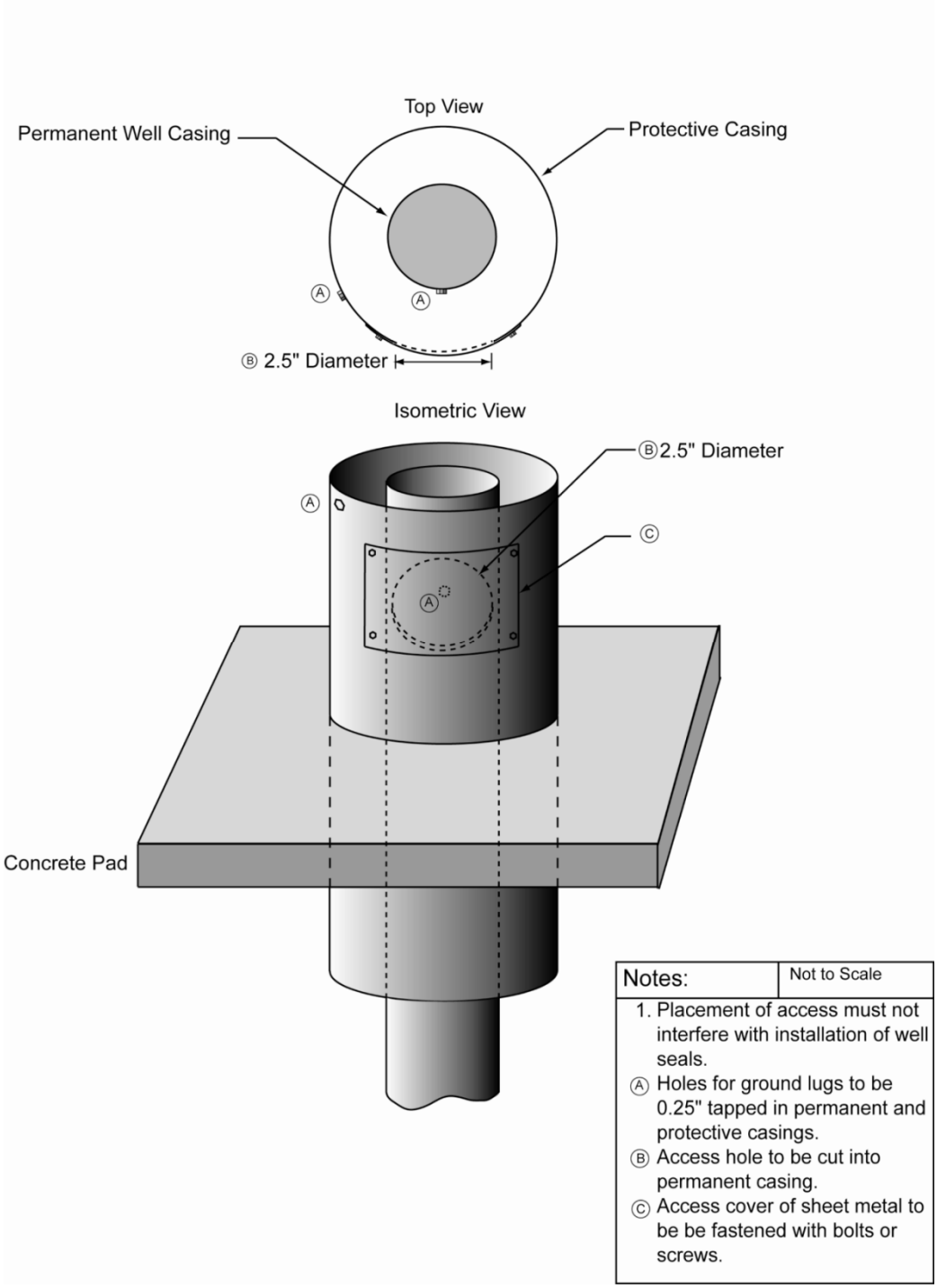

Figure 3 - Diagram Showing Configuration of Access Port in Protective Casing

3.6 Well Development

The objectives of well development are to settle the filter pack, remove formation fines, prevent uncontrolled infiltration of fines into the well, and to ensure efficient hydraulic communication of the well with the surrounding aquifer. Well development will be conducted in two stages with initial development performed during well completion and final development performed after well construction (Driscoll, 1986).

3.6.1 Initial Well Development

Initial development will be performed during the placement and settling of the filter pack as described above using a dual-flange surge block. Surging settles the filter pack and begins to pull drilling-generated fines from the borehole wall to improve hydraulic communication with the aquifer. Combining surging with the sand pack placement will provide an abrasive action on the borehole wall that will enhance borehole efficiency (Driscoll, 1986).

Surging should be carried out in no greater than 10-ft intervals. Surge block swab disks shall fit snugly inside the well screen and shall be stiff enough to keep the surge block centered in the well during surging. Surging strokes per minute shall be rapid enough to allow the surge block to slightly freefall through the water column but not rapid enough to cause excessive “float” which could potentially allow the swab tool to damage the screen.

Fines will be removed from the well as necessary. Fines must be bailed from the well at regular intervals to prevent the sediments from accumulate in the screened zone as this runs a greater risk of damaging the screen during bailing. For bailing, it is recommended to use a sand pump or similar apparatus. A dart bailer is not recommended for bailing the well because the use of this tool runs an increased risk of puncturing the bottom of the well.

3.6.2 Final Well Development

Final well development and pump installation for each well shall not be started sooner than 12 hours following placement of the surface seal, and shall take place within two weeks of installation of the well. The contractor shall notify the BTR 24 hours prior to the anticipated final development time in order to arrange for purgewater transportation, hydrogeologic support, and other support necessary to implement final development. The contractor shall provide a submersible pump, flow meter, and all necessary support equipment capable of pumping no less than 50 gallons per minute (gpm) at the well head. Final well development shall be performed as follows:

- Bail fines from the well to within 0.5 ft of the bottom of the sump in preparation for final development.
- Temporarily install the development pump as close to the bottom of the screen as possible to maximize available head. Develop the well by over-pumping at a minimum of 10 ft intervals. Over-pumping shall be defined as the maximum sustainable flow rate of the pump (called out above), or the maximum sustainable flow rate to draw the head down fifty percent. Lower pumping rates may be authorized by the BTR based on purge constraints such as water storage and disposal capacities.

- The field geologist will lower a pressure transducer into the well to monitor drawdown and recovery during the test. The field geologist will periodically collect water measurements of physical parameters, such as turbidity, temperature, pH, and conductivity using field instruments throughout the test. To facilitate water sampling, the Contractor will need to place a small valve on the manifold with the flow meter to facilitate sampling.
- Development will continue until the well water is less than 5 nephelometric turbidity units and the temperature, pH, and conductivity have stabilized to within 10% of three consecutive measurements. The Field Geologist will determine when development is complete in accordance with SGRP-PRO-OP-50024, *Well Development and Testing*. Should these conditions not be met, CHPRC's BTR, with the concurrence of CHPRC's representative Field Geologist, and the project Technical Lead, shall determine when the development is adequate.

CHPRC's Field Geologist will monitor aquifer response and recovery utilizing a data logger in conjunction with a pressure transducer (or similar device) or manually using an e-tape. While monitoring recovery, the pump and all down-hole monitoring equipment must remain in place. Recovery monitoring is expected to take at least 60 minutes per final development stage.

3.7 Final Report

A borehole summary report will be prepared after well completion to compile and archive records, observations, and measurements associated with the drilling and well construction. The borehole summary report includes the field notes and forms prepared during the drilling, sampling, and construction of each well, well construction details, and well development data. Additional information presented includes the geologic log, the results of the civil survey with elevation and depth corrections to measurements made while drilling, a summary of the management and disposition of drilling-derived waste, and the well acceptance documentation.

4. Waste Management

Waste generated during the activities described in this document will be managed according to DOE/RL-2004-18, *Rev 1, Waste Control Plan for the 200-PO-1 Operable Unit.* The following are the major assumptions for handling and management of wastes derived during the drilling and construction of the wells discussed in this DOW. These wastes may include drill cuttings, purgewater, decontamination waste, personal protective equipment, and miscellaneous solid waste.

Vadose and saturated zone soil cuttings and miscellaneous solid waste will be stored and managed as investigation-derived waste and surveyed by the Industrial Health and Radiation Control technicians in accordance with the site-specific Health and Safety Plan. The contractor shall be responsible for packaging and handling all wastes generated during construction, testing, decontamination, and demobilization. The S&GRP Waste Management Specialist will provide final waste management instructions for the project.

Purgewater will be collected and contained at the well head until it is either transported to the Modular Storage Unit or, if waste acceptance criteria can be met, the Effluent Treatment Facility. Purgewater, groundwater samples, and decontamination fluids generated during well drilling, sample screening, and analysis shall be managed as purgewater in accordance with purgewater guidance provided in DOE/RL-2009-39, *Investigation-Derived Waste Purgewater Management Action Memorandum*, and DOE/RL-2009-80, *Investigation Derived Waste Purgewater Management Work Plan*.

5. Quality Assurance

CHPRC-issued document *Quality Assurance Program* (PRC-MP-QA-599), describes how CHPRC implements the quality assurance (QA) requirements conveyed in U.S. Department of Energy Order 414.1D *Quality Assurance* (DOE O 414.1D) and "Nuclear Safety Management" (10 *Code of Federal Regulations* [CFR] 830.121). PRC-MP-QA-599 also shows how the *Hanford Federal Facility Agreement and Consent Order* (Ecology et al. 1989) and *Hanford Analytical Services Quality Assurance Requirements Document (HASQARD)* (DOE/RL-96-68) apply to Environmental QA Program Plans. CHPRC has also issued *Environmental Quality Assurance Plan* (CPRC-00189). All CHPRC employees and subcontractors performing environmental cleanup activities are responsible for performing work in accordance with the requirements set forth in CHPRC-00189.

All work performed under this DOW will be performed in compliance with Project Hanford Management System overall QA program design (PRC-MP-QA-599).

All operations including drilling, sampling and well completion/decommissioning, testing and associated documentation are subject to surveillance by CHPRC, CHPRC's authorizing agent and/or owner. This surveillance shall in no way relieve the contractor of any contractual responsibilities. Note the term "surveillance" as used here may include inspection, survey, and/or assessment.

Commercially available tape measures and electronic depth sounders shall have an accuracy of +/- 0.05 ft in 300 ft as required by CHPRC procedure SGRP-PRO-EP-50026, *Requirements for Use of Hydrogeologic Field Measurement and Monitoring Equipment*, and will be used to make depth and length measurements while drilling and completing the well. The surface of the ground adjacent to the borehole will be used as the "ground surface" reference for depth measurements. The elevation of the brass marker on the concrete well pad and the top of the protective casing will be surveyed after the well has been completed. A correlation of the measurements made while drilling to the surveyed elevation will be included in the final report.

Technical procedures to be followed are listed in Section 7.2 of this document.

6. General Requirements

Field work for the wells will be conducted in accordance with existing CHPRC procedures and protocols and the specifications set forth in this DOW. The applicable procedures are discussed in the following sections.

6.1 Safety & Health

All personnel working at the drilling sites addressed by this plan will have completed, at a minimum:

- Occupational Safety and Health Administration Act 40-hour Hazardous Waste Site Worker training program (29 CFR 1910.120).
- CHPRC General Employee Training (CGET).
- Hanford Radiation Worker II training.

Work will be performed in accordance with the following procedures:

- CHPRC-00073, *CH2M Hill Plateau Remediation Company Radiological Control Manual*
- Site specific plans, as applicable:
  - Health and safety plans
  - Radiological evaluation/radiation work permits
  - Activity hazard analysis/job safety analysis
  - Site-specific Waste Packaging Instruction
- CHPRC procedures
- Soil and Groundwater Remediation Project Radiological Control Procedures
- CHPRC Environmental Procedures

6.2 Technical Procedures/Specifications

This section identifies technical procedures/specifications applicable to field activities performed under this DOW. Activities associated with the drilling and installation of these wells and management of waste generated by these activities will adhere to, at a minimum, the following procedures and requirements:

- 0000X-DC-W0001, *Supplemental Waste Acceptance Criteria for Disposal at Environmental Restoration Disposal Facility*
- PRC-MP-QA-599, *Quality Assurance Program*
- PRC-PRO-IRM-8310, *Document Control Processes*
- PRC-PRO-EP-15333, *Environmental Protection Processes*

- PRC-PRO-EP-15334, *Effluent and Environmental Monitoring for Radionuclide Airborne Emissions*
- PRC-PRO-EP-15335, *Environmental Permitting and Document Preparation*
- PRC-RD-EP-15332, *Environmental Protection Requirements*
- SGRP-PRO-EN-50025 (GRP-EE-01-7.0), *Geologic Logging*
- SGRP-PRO-EN-50030 (GRP-EE-02-14.1), *Drilling, Remediating, and Decommissioning Resource Protection Wells, and Geotechnical Soil Borings*
- SGRP-PRO-EP-50026 (GRP-EE-01-7.4), *Requirements for Use of Hydrogeologic field measurement & Monitoring Equipment*
- SGRP-PRO-OP-50004 (GRP-EE-01-1.11), *Purgewater Management*
- SGRP-PRO-OP-50037 (GRP-EE-05-1.21), *Particle Size Distribution of Soil - Wet Sieve Analysis*
- SGRP-PRO-OP-50021 (GRP-EE-01-3.1), *Environmental Sample Preparation and Shipping Authorization*
- SGRP-PRO-OP-50024 (GRP-EE-01-6.3), *Well Development and Testing*
- SGRP-PRO-OP-50029 (GRP-EE-01-7.7), *Geophysical Survey Planning*
- SGRP-PRO-PM-50079 (GRP-FS-04-G-069) *Field Logbooks*
- SGRP-PRO-RP-50023 (GRP-EE-01-6.2), *Field Cleaning and/or Decontamination of GeoProbe® and Drilling Equipment*
- SGRP-PRO-SMP-50015 (GRP-EE-01-2.7), *Sample Management and Reporting Sample Issue Resolution*
- SGRP-PRO-SMP-50043 (GRP-FS-04-G-004), *Operational Monitoring Groundwater Sampling*
- SGRP-PRO-SMP-50047 (GRP-FS-04-G-012), *Sample Packaging, Transporting and Shipping*
- SGRP-PRO-SMP-50051 (GRP-FS-04-G-016), *Chain of Custody/Sample Analysis Request*
- SGRP-PRO-SMP-50060 (GRP-FS-04-G-028), *Field Characterization and Treatment Monitoring Activities Groundwater Sampling*
- SGRP-PRO-SMP-50061 (GRP-FS-04-G-029), *Non-VOC Soil and Sediment Sampling*
- SGRP-PRO-SMP-50062 (GRP-FS-04-G-030), *VOC Soil and Sediment Sampling*
- SGRP-PRO-SMP-52126 (GRP-FS-04-G-005), *Control of Monitoring Instruments*
- WAC 173-160, *Minimum Standards for Construction and Maintenance of Wells*

- WCH-191, *Environmental Restoration and Disposal Facility Waste Acceptance Criteria*

7. Project Documentation

Documentation requirements for these activities are separated into scoping documents, field activity documents, and reporting documents. The following documents will be prepared to support the well drilling activity:

- Scoping Documents
  - DOW (this document)
  - Drilling specifications/subcontractor scope of work (procurement package)
  - Excavation permit
  - SGRP-PRO-OP-50120
  - Additional waste management documents, as required
- Field Documentation
  - Well Drilling/Decommissioning Planning form
  - Daily Field Activity Reports
  - Sample collection, custody, and shipment documentation for waste samples
  - Well logs (borehole, lithologic, and completion)
  - Field Logbook
  - Well Construction summary report
  - Well Summary sheet
  - Field Cleaning and/or Decontamination sheets
  - Well Development and Test data sheets
  - Sieve Analysis sheets
  - Well Survey Data Report
  - Well Acceptance Report
- The WDOH ALARACT Agreements(s)
- Reporting Documents
  - Field documentation will be transmitted to Drilling Operations for incorporation into the well database
  - Borehole Summary Report
  - State of Washington Resource Protection Well Report (generated by driller)

The records produced for this project will undergo technical and management review in accordance with CHPRC practices and procedures. The required reviewers will be identified prior to document completion, and the review time will be established as soon as practical.

8. References

CH2M Hill Plateau Remediation Company Soil and Groundwater Remediation Project Procedures:

- 0000X-DC-W0001, *Supplemental Waste Acceptance Criteria for Disposal at Environmental Restoration Disposal Facility*
- PRC-MP-QA-599, *Quality Assurance Program*
- PRC-PRO-IRM-8310, *Document Control Processes*
- PRC-PRO-EP-15333, *Environmental Protection Processes*
- PRC-PRO-EP-15334, *Effluent and Environmental Monitoring for Radionuclide Airborne Emissions*
- PRC-PRO-EP-15335, *Environmental Permitting and Document Preparation*
- PRC-RD-EP-15332, *Environmental Protection Requirements*
- SGRP-PRO-EN-50025 (GRP-EE-01-7.0), *Geologic Logging*
- SGRP-PRO-EN-50030 (GRP-EE-02-14.1), *Drilling, Remediating, and Decommissioning Resource Protection Wells, and Geotechnical Soil Borings*
- SGRP-PRO-EP-50026 (GRP-EE-01-7.4), *Requirements for Use of Hydrogeologic field measurement & Monitoring Equipment*
- SGRP-PRO-OP-50004 (GRP-EE-01-1.11), *Purgewater Management*
- SGRP-PRO-OP-50021 (GRP-EE-01-3.1), *Environmental Sample Preparation and Shipping Authorization*
- SGRP-PRO-OP-50024 (GRP-EE-01-6.3), *Well Development and Testing*
- SGRP-PRO-OP-50029 (GRP-EE-01-7.7), *Geophysical Survey Planning*
- SGRP-PRO-OP-50037 (GRP-EE-05-1.21), *Particle Size Distribution of Soil - Wet Sieve Analysis*
- SGRP-PRO-PM-50079 (GRP-FS-04-G-069) *Field Logbooks*
- SGRP-PRO-RP-50023 (GRP-EE-01-6.2), *Field Cleaning and/or Decontamination of GeoProbe® and Drilling Equipment*
- SGRP-PRO-SMP-50015 (GRP-EE-01-2.7), *Sample Management and Reporting Sample Issue Resolution*
- SGRP-PRO-SMP-50043 (GRP-FS-04-G-004), *Operational Monitoring Groundwater Sampling*
- SGRP-PRO-SMP-50047 (GRP-FS-04-G-012), *Sample Packaging, Transporting and Shipping*

- SGRP-PRO-SMP-50051 (GRP-FS-04-G-016), *Chain of Custody/Sample Analysis Request*
- SGRP-PRO-SMP-50060 (GRP-FS-04-G-028), *Field Characterization and Treatment Monitoring Activities Groundwater Sampling*
- SGRP-PRO-SMP-50061 (GRP-FS-04-G-029), *Non-VOC Soil and Sediment Sampling*
- SGRP-PRO-SMP-50062 (GRP-FS-04-G-030), *VOC Soil and Sediment Sampling*
- SGRP-PRO-SMP-52126 (GRP-FS-04-G-005), *Control of Monitoring Instruments*
- WCH-191, *Environmental Restoration and Disposal Facility Waste Acceptance Criteria*

Other References:

10 CFR 830.121, *Nuclear Safety Management,* Code of Federal Regulations, as amended.

29 CFR 1910.120, *Hazardous Waste Operations and Emergency Response*, Code of Federal Regulations, as amended.

CHPRC-00073, 2013, *CH2M Hill Plateau Remediation Company Radiological Control Manual,* CH2M Hill Plateau Remediation Company, Richland, Washington.

CHPRC-00189, 2013, *CH2M Hill Plateau Remediation Company Environmental Quality Assurance Program Plan*, CH2M Hill Plateau Remediation Company, Richland, Washington.

Comprehensive Environmental Response, Compensation, and Liability Act of 1980, (CERCLA) 42 U.S.C. 9601, et seq.

DOE O 414.1D, *Quality Assurance*, U.S. Department of Energy, Washington, D.C. Available at: https://www.directives.doe.gov/directives/414.1-BOrder-d/view

DOE/RL-2002-39, 2002, *Standardized Stratigraphic Nomenclature for the Post-Ringold-Formation Sediments Within the Central Pasco Basin,* U.S. Department of Energy, Richland Operations Office, Richland, Washington.

DOE/RL-2004-18, 2008, *Waste Control Plan for the 200-PO-1 Operable Unit.* Rev 1, U.S. Department of Energy, Richland Operations Office, Richland, Washington.

DOE/RL-2004-60, 2008, *200-SW-1 Nonradioactive Landfills Group and 200-SW-2 Radioactive Landfills Group Operable Units Remedial Investigation/Feasibility Study Work Plan*, U.S. Department of Energy, Richland Operations Office, Richland, Washington.

DOE/RL-2009-39, 2009, *Investigation-Derived Waste Purgewater Management Action Memorandum*, U.S. Department of Energy, Richland Operations Office, Richland, Washington.

DOE/RL-2009-80, 2009, *Investigation Derived Waste Purgewater Management Work Plan*, U.S. Department of Energy, Richland Operations Office, Richland, Washington.

DOE/RL-2011-41, 2011, *Hanford Site Strategy for Management of Investigation Derived Waste*, U.S. Department of Energy, Richland Operations Office, Richland, Washington.

DOE/RL-2011-118, *Hanford Site Groundwater Monitoring Report for 2011*, U.S. Department of Energy, Richland Operations Office, Richland, Washington.

Ecology, EPA, and DOE, 1989, *Hanford Federal Facility Agreement and Consent Order*, 2 vols., as amended, Washington State Department of Ecology, U.S. Environmental Protection Agency, and U.S. Department of Energy, Olympia, Washington. Available at: http://www.hanford.gov/?page=91&parent=0.

Driscoll, F. 1986, *Groundwater and Wells,* 2nd ed. Johnson Division, Signal Environmental Systems, St. Paul, MN.

Open File Report 96-8, *The Miocene to Pliocene Ringold Formation and Associated Deposits of the Ancestral Columbia River System, South-Central Washington and North-Central Oregon.*

PNNL-12227, 1999, *Groundwater Monitoring Plan for the Nonradioactive Dangerous Waste Landfill*, Pacific Northwest National Laboratory Richland, Washington

PNNL-12261, 2000, *Revised Hydrogeology for the Suprabasalt Upper Aquifer System, 200-East Area and Vicinity, Hanford Site, Washington*, Pacific Northwest National Laboratory Richland, Washington

PNNL-13014, 2000, *Groundwater Monitoring Plan for the Solid Waste Landfill,* Pacific Northwest National Laboratory Richland, Washington

PNNL-13858, 2002, *Revised Hydrogeology for the Suprabasalt Upper Aquifer System, 200-West Area and Vicinity, Hanford Site, Washington*, Pacific Northwest National Laboratory Richland, Washington

SGW-34011, 2007, *Data Quality Objective Summary Report Supporting the 200-PO-1 Groundwater Operable Unit,* CH2M Hill Plateau Remediation Company, Richland, Washington.

SGW-50269, 2013, *Waste Data Quality Objectives Summary Report for the Installation of Five M-24 RCRA Wells in Fiscal Year 2011*, Rev 0, CH2M Hill Plateau Remediation Company, Richland, Washington.

SGW-54343, 2013, *Description of Work for the Installation of Five Groundwater Wells to Support M-24 TPA Work in FY 2013*, Rev 0, CH2M Hill Plateau Remediation Company, Richland, Washington.

Shuter and Teasdale, 1989, *Techniques of Water-Resource Investigations of the United States Geological Survey, Book 2, Chapter F2: Application of Drilling, Coring, and Sampling Techniques to Test Holes and Wells,* US. Geological Survey, United States Government Printing Office, Washington

WAC 173-160, *Minimum Standards for Construction and Maintenance of Wells*, Washington Administrative Code, as amended.

WAC 173-160-420, *General Construction Requirements for Resource Protection Wells*, Washington Administrative Code, as amended.

WAC 173-303, *Dangerous Waste Regulations,* Washington Administrative Code, as amended.

WDOH, 2008, *The Department of Energy Hanford Site Radioactive Air Emissions License #FF-01*, Enclosure 3, "ALARACT Agreements," ALARACT 18, "Environmental Restoration Program ALARACT Demonstration for Drilling," Washington State Department of Health, Office of Radiation Protection, Radioactive Air Emissions Section, Richland, Washington. Available at: http://www.doh.wa.gov/Portals/1/Documents/4100/FF-01_a_.pdf

Distribution

Electronic Copies Only	CHPRC	
	D.P. Capelle	R3-60
	J.L. Hammons	S3-25
	L. Brouillard	R3-50
	J.B. Geiger	R3-60
	A.J. Green	R3-60
	L.W. Gurney	R3-60
	S.L. Myrick	R3-20
	J.L. Kaas	R3-21
	R.W. Oldham	R3-60
	K.K. Stiles	S3-25
	S.J. Trent	R3-50
	D. Todak	R3-50
	K.M. Whitley	R3-50