Date Received for Clearance Process (MM/YY/DD)
03/01/01

# INFORMATION CLEARANCE FORM

**A. Information Category**

- [ ] Abstract
- [ ] Journal Article
- [ ] Summary
- [ ] Internet
- [ ] Visual Aid
- [ ] Software
- [ ] Full Paper
- [x] Report
- [ ] Other _____

**B. Document Number** HW-55176 PART 1 - 7

**C. Title**
Index of CPD (Chemical Processing Department) Crib Building Numbers Design of CPD Radioactive Liquid Waste Disposal Sites

**D. Internet Address**

**E. Required Information**

1. Is document potentially Classified? [x] No [ ] Yes (MANDATORY)
   Chris Willingham
   Manager's Signature Required
   If Yes _____ [x] No [ ] Yes Classified
   ADC Signature Required
2. References in the Information are Applied Technology [x] No [ ] Yes
   Export Controlled Information [x] No [ ] Yes
3. Does Information Contain the Following: (MANDATORY)
   a. New or Novel (Patentable) Subject Matter? [x] No [ ] Yes
      If "Yes", Disclosure No.: _____
   b. Information Received in Confidence, Such as Proprietary and/or Inventions? [x] No [ ] Yes If "Yes", Affix Appropriate Legends/Notices.
   c. Copyrights? [x] No [ ] Yes If "Yes", Attach Permission.
   d. Trademarks? [x] No [ ] Yes If "Yes", Identify in Document.
4. Is Information requiring submission to OSTI? [x] No [ ] Yes
5. Release Level? [x] Public [ ] Limited

**F. Complete for a Journal Article**

1. Title of Journal

**G. Complete for a Presentation**

1. Title for Conference or Meeting _____
2. Group Sponsoring _____
3. Date of Conference _____
4. City/State _____
5. Will Information be Published in Proceedings? [ ] No [ ] Yes
6. Will Material be Handed Out? [ ] No [ ] Yes

**H. Author/Requestor**
Chris Willingham
C. Willingham
(Print and Sign)

**Responsible Manager**
Chris Willingham
B. M. Sullivan for BMS
(Print and Sign)

**I. Reviewers**

| | Yes | Print | Signature | Public Y/N (If N, complete J) |
|---|---|---|---|---|
| General Counsel | [ ] | | | Y / N |
| Office of External Affairs | [ ] | | | Y / N |
| DOE-RL | [ ] | | | Y / N |
| Other | [x] | Chris Willingham | Chris Willingham | Y / N |
| Other | [ ] | | | Y / N |

**J. If Information Includes Sensitive Information and is not to be released to the Public indicate category below.**

- [ ] Applied Technology
- [ ] Protected CRADA
- [ ] Personal/Private
- [ ] Export Controlled
- [ ] Proprietary
- [ ] Procurement-Sensitive
- [ ] Business-Sensitive
- [ ] Patentable
- [ ] Predecisional
- [ ] Other (Specify) _____
- [ ] UCNI

All 7 part are Approved for Public Release
CW 3-23-01

**K. If Additional Comments, Please Attach Separate Sheet**

Information Clearance Approval

APPROVED FOR RELEASE
OFFICIAL DOCUMENT
CW
Date 3-23-01

A-6001-401 (12/00)

# RELEASE AUTHORIZATION

| | |
|---|---|
| **Document Number:** | HW-55176 Part 1 - 7 |
| **Document Title:** | Index of CPD (Chemical Processing Department) Crib Building Numbers Design of CPD Radioactive Liquid Waste Disposal Sites, Parts 1 through 7. |

**This document, reviewed in accordance with DOE Order 241.1, "Scientific and Technical Information Management," and DOE G 241.1-1, "Guide to the Management of Scientific and Technical Information," does not contain classified or sensitive unclassified information and is:**

## APPROVED FOR PUBLIC RELEASE

Chris Willingham — 03/23/2001

C. Willingham
Lockheed Martin Services, Inc.
Document Control/Information Clearance

Reviewed for Applied Technology, Business Sensitive, Classified, Copyrighted, Export Controlled, Patent, Personal/Private, Proprietary, Protected CRADA, Trademark, Unclassified Controlled Nuclear Information.

LEGAL DISCLAIMER. This report was prepared as an account of work sponsored by an agency of the United States Government. Neither the United States Government nor any agency thereof, not any of their employees, nor any of their contractors, subcontractors or their employees, makes any warranty, express or implied, or assumes any legal liability or responsibility for the accuracy, completeness, or any third party's use or the results of such use of any information, apparatus, product, or process disclosed, or represents that its use would not infringe privately owned rights. Reference herein to any specific commercial product, process, or service by trade name, trademark, manufacturer, or otherwise, does not necessarily constitute or imply its endorsement, recommendation, or favoring by the United States Government or any agency thereof or its contractors or subcontractors. The views and opinions of authors expressed herein do not necessarily state or reflect those of the United States Government or any agency thereof.

This report has been reproduced from the best available copy.

Printed in the United States of America.

UNCLASSIFIED
(CLASSIFICATION)

**GENERAL ELECTRIC**

HANFORD ATOMIC PRODUCTS OPERATION – RICHLAND, WASHINGTON

DOCUMENT NO. HW-55176 - ~~PT. 1~~

COPY NO. 201

DATE March 10, 1958

ISSUING FILE

TITLE

INDEX OF CPD CRIB BUILDING NUMBERS
DESIGNS OF CPD RADIOACTIVE LIQUID WASTE
DISPOSAL SITES

**REFERENCE COPY**

AUTHOR

V. W. Wood

NOT FOR CIRCULATION

RETAINED FOR RECORD PURPOSES ONLY

REFERENCE COPY
NOT FOR CIRCULATION
NOV 2 1966
RECEIVED
DOCUMENT CONTROL & CUSTODY INC.
271-U Bldg., 200 West

| ROUTE TO | PAYROLL NO. | LOCATION | FILES ROUTE DATE | SIGNATURE AND DATE |
|---|---|---|---|---|
| ~~W. L. Harvey~~ | | ~~325~~ | | ~~[illegible] 3/12/58~~ |
| ~~[illegible]~~ | | | | |
| W. L. Caudill | 60556 | 271-T | SEP 20 1968 | |
| ~~E. J. Curren~~ | | | | |
| E. J. Curren | 60217 | 222-T | OCT 21 1968 | |
| ~~AEC Rh. Env. Safety + Tech Serv. Div~~ | | | ~~SEP 14 1973~~ | |
| ~~(P.G. Rhodes)~~ | | | | |
| ~~C. B. Foster~~ | ~~60139~~ | ~~Fed~~ | ~~MAR 14 1974~~ | |
| D. J. Carrell | 63587 | 222-T | OCT 11 1974 | |
| D. A. Taylor | 60262 | 270W | MAY 20 1976 | |
| | | | | |
| | | | | |
| | | | | |
| | | | | |
| | | | | |

C-1899-MS (5 – 56)

UNCLASSIFIED
(CLASSIFICATION)

TO BE USED ON UNCLASSIFIED AND OFFICIAL USE ONLY DOCUMENTS

PUREX

# INDEX OF CPD CRIB BUILDING NUMBERS DESIGNS OF CPD RADIOACTIVE LIQUID WASTE DISPOSAL SITES

## Part I of VII Parts
## Process Technology - Study Report

by

V. W. Wood
Radiological Design and Development
Facilities Engineering Operation
CHEMICAL PROCESSING DEPARTMENT

March 10, 1958

D I S T R I B U T I O N

| | |
|---|---|
| CR Bergdahl | TG LaFollette |
| RM Bernard | CE Linderoth |
| WG Browne | HE Parker |
| E Doud | HF Peterson |
| J Durbin | DW Pearce |
| GK Carpenter | OH Pilkey |
| JR Cartmell | EL Reed |
| JB Fecht | RA Roberts |
| DR Gustavson | OC Schroeder |
| WA Haney | HP Shaw |
| JF Honstead | VW Wood |
| IM Jacques | Records Center |
| EB Jackson | 300 Files |
| CE Kent | Extras |

# INDEX OF CPD CRIB BUILDING NUMBERS DESIGNS OF CPD RADIOACTIVE LIQUID WASTE DISPOSAL SITES

## Part I of VII Parts
## Process Technology - Study Report

## INTRODUCTION

During the fourteen years or more which the separations areas have operated, many sites have been used for the disposal of radioactive liquid wastes. Various methods have been used in assigning building numbers to these sites and, in a number of cases, changes have been made which have brought about some confusion. One of the reasons being some currently used building numbers do not agree with the numbers existing on design prints for the facilities. Reference (2) was an effort to establish a listing of the liquid waste disposal sites. It required considerable time and research to locate information concerning these sites.

Many varied designs have been used for the disposal of radioactive liquid wastes. Reverse wells, trenches, cribs or caverns, etc, have been used. Specific information on these facilities is often difficult to obtain for in some instances they were constructed on work orders with no recorders being retained on the design. In general, the design on each facility has been different. This has made it extremely difficult for people to have a good working knowledge of the various waste disposal sites.

## PURPOSE

The purpose of this report (Part I) is to provide a ready reference to the Purex liquid waste disposal sites as well as a compilation of sketches showing the basic information on the design of each facility.

Another objective is to establish a simplified and uniform numbering system. Still another objective is to provide an up-to-date tabulation. Subsequent parts of this report will provide information on cribs for such plants as Redox and "Z" plant.

## SUMMARY AND CONCLUSIONS

All radioactive liquid waste disposal sites should have the 216 Building number designation. These should be further grouped by giving all such sites for Purex a prefix of 216-A. Other major series would be 216-S for Redox; 216-T for "T" Plant; 216-B for "B" Plant; 216-U for "U" Plant and 216-Z for "Z" Plant.

The numbering list in "Official Hanford Works Building List - Specification HW-5000" by Engineering Files - Construction Engineering Operation should be revised to more closely follow the above numbering system.

RECOMMENDATIONS

It is recommended that the following action be taken:

1. All groups and services referring to the Purex cribs or report data concerning them should use the index numbering system as presented in this report. In the case of Purex this means practically no changes.

2. That all drawings concerning these disposal sites, including maps, be revised to show the proper locations and numbers for these cribs.

3. Any suggestions for improving the usefulness of this report should be referred to the author.

DISCUSSION

When all parts of the report are completed, and the work outlined in the report is completed, much confusion will be eliminated and more people will be better informed on the design of each waste disposal facility. The report will provide a firm basis for future building number assignments.

While some sincere effort has been made to try and keep a methodical system for recording waste disposal sites, a number of problems have developed. For example, HW-5000, Sheet 29 of 50 lists, only two cribs in the 216-Z series. They are 216-Z-8 and 216-Z-9. Although no coordinates are given, it is doubtful if these refer to the same cribs with the same number as given in Reference "2".

As indicated earlier, the use of the crib index, as presented in this report should be very easy. In addition, information is presented which is very difficult to locate in the records and in some cases it is not available in the records.

REFERENCES

1. HW-5000, "Official Hanford Works Building List - Specification HW-5000" by Engineering Files - Construction Engineering Operation.

2. HW-43121, "Tabulation of Radioactive Liquid Waste Disposal Facilities" by HV Clukey dated May 10, 1956.

3. HW-33305, "Tabulation of Radioactive Liquid Waste Disposal Facilities," by HV Clukey dated October 8, 1954.

Cross Reference for Purex Radioactive Liquid Waste Disposal Sites

| Suggested Crib No. | Number Listed in HW-5000 | Number Listed in HW-43121 | Original or Number Used on Drawings | Remarks |
|---|---|---|---|---|
| 216-A-1 | 216-A-1 | 216-A-1 | 216-A-1 | |
| 216-A-2 | 216-A-2 | 216-A-2 | 216-A-2 | |
| 216-A-3 | 216-A-3 | 216-A-3 | 216-A-3 | |
| 216-A-4 | 216-A-4 | 216-A-4 | 216-A-4 | |
| 216-A-5 | 216-A-5 | 216-A-5 | 216-A-5 | |
| 216-A-6 | 216-A-6 | 216-A-6 | 216-A-6 | |
| 216-A-7 | 216-A-7 | 216-A-7 | 216-A-7 | |
| 216-A-8 | 216-A-8 | 216-A-8 | 216-A-8 | |
| 216-A-9 | 216-A-9 | 216-A-9 | 216-A-9 | |
| 216-A-10 | 216-A-10 | 216-A-10 | 216-A-10 | |
| 216-A-11 | 216-A-11 | 216-A-11 | | |
| 216-A-12 | 216-A-12 | 216-A-12 | | |
| 216-A-13 | 216-A-13 | 216-A-13 | | |
| 216-A-14 | 216-A-14 | 216-A-14 | | |
| 216-A-15 | 216-A-15 | 216-A-15 | | |
| 216-A-16 | 216-A-16 | 216-A-16 | 216-A-17 Overflow | |
| 216-A-17 | 216-A-17 | 216-A-17 | | |
| 216-A-18 | 216-A-18 | 216-A-18 | | |
| 216-A-19 | 216-A-19 | 216-A-19 | | |
| 216-A-20 | 216-A-20 | 216-A-20 | | |
| 216-A-21 | 216-A-21 | 216-A-21 | | |
| 216-A-22 | 216-A-22 | 216-A-22 | 216-A-22 | |
| * 216-A-23 A&B | None | None | None | 216-A-23 was originally another crib which was not built. |
| 216-A-24 | 216-A-24 | None | 216-A-24 | Alternate 216-A-8 |
| 216-A-25 | Gable Mt'n. Swamp | | | |

* 216-A and B were built on a Work Order in fall of 1957 and no numbers assigned.

APPENDIX

A. Explanation of Parts to the Report

Part I will cover the Purex Radioactive Liquid Waste Disposal Sites.

Part II will cover the "Z" Plant Radioactive Liquid Waste Disposal Sites.

Part III will cover the Redox Plant Radioactive Liquid Waste Disposal Sites.

Part IV will cover the "U" Plant Radioactive Liquid Waste Disposal Sites.

Part V will cover the "T" Plant Radioactive Liquid Waste Disposal Sites.

Part VI will cover the "B" Plant Radioactive Liquid Waste Disposal Sites.

Part VII will cover the "C" Plant, Hot Semi-works, the 200 North Areas and miscellaneous.

B. Index for Purex Radioactive Liquid Waste Disposal Sites.

C. Sketches of Purex Waste Disposal Facilities.

D. Map of Purex Crib Sites (SK-2-17798)

# CRIB INDEX
## PUREX

| Number | Description Appendix Sheet | Service | Use Dates From | To | Status |
|---|---|---|---|---|---|
| 216-A-1 | C-1 | Start-up Wastes | 11/55 | 12/55 | Abandoned |
| 216-A-2 | C-2 | Organic Wastes | 5/56 | - | Active |
| 216-A-3 | C-3 | 203-A Silica Gel Wastes | 3/56 | | Active |
| 216-A-4 | C-4 | Laboratory & Stack Dia. | 12/55 | 12/58 | Replaced by A-21 |
| 216-A-5 | C-5 | Process Condensate | 11/55 | | Active |
| 216-A-6 | C-6 | Steam Condensate | 11/55 | 1/61 | Replaced by A-30 |
| 216-A-7 | C-7 | 241-A-152 Box Drain | 11/55 | 7/59 | Replaced by Catch Tank |
| 216-A-8 | C-8 | Tank Farm Condenser Effl. | 11/55 | 5/58 | Replaced by A-24 |
| 216-A-9 | C-9 | Fractionator Cond. Eff. | 3/56 | 2/58 | Effluent to Swamp |
| 216-A-10 | C-10 | Process Condensate | Not Used | | Replacement for A-5 |
| 216-A-11 | C-11 | Trap Pit #1 Drain | 11/55 | - | Active |
| 216-A-12 | C-11 | Trap Pit #3 Drain | 11/55 | - | Active |
| 216-A-13 | C-12 | Air Sample Seal Drain | 11/55 | - | Active |
| 216-A-14 | C-11 | Vacuum Clean Pit Drain | 11/55 | - | Active |
| 216-A-15 | C-13 | Prop. Sampler Pit Drain | 11/55 | - | Active |
| 216-A-16 | C-14 | 241-A Deentrainment Floor Drain | 1/56 | - | Active |
| 216-A-17 | C-14 | Overflow from A-16 | 1/56 | - | Active |
| 216-A-18 | C-15 | Start-up Wastes | 11/55 | 12/55 | Abandoned |
| 216-A-19 | C-16 | Start-up Wastes | 11/55 | 12/55 | Abandoned |
| 216-A-20 | C-17 | Start-up Wastes | 11/55 | 12/55 | Abandoned |
| 216-A-21 | C-18 & 19 | $NH_3$ Scrubber & Stack Drain<br>Caustic Scrubber Wastes | 12/58<br>10/57 | -<br>6/58 | Active |
| 216-A-22 | C-20 | 203-A Cond. & Floor Drain | 11/55 | - | Active |
| 216-A-23A | C-21 | 241-A Fan House Drain | 1957 | - | Active |
| 216-A-23B | C-21 | Overflow from A-23A | 1957 | - | Active |
| 216-A-24 | C-22 & 23 | Tank Farm Cond. Effl. | 5/58 | - | Active |
| 216-A-25 | C-24 | Cooling Water | 12/57 | - | Active |
| 216-A-26A | C-25 & 26 | Fan Control Room Drain | 3/59 | - | Active |
| 216-A-26B | C-25 & 26 | 291 Fan House Drain | 3/59 | - | Active |

## CRIB INDEX
## PUREX

| Number | Description Appendix Sheet | Service | Use Dates From | To | Status |
|---|---|---|---|---|---|
| 216-A-27 | C-27 | Lab, Scrubber & Stack Drain | Not Used | | Replace. for A-21 |
| 216-A-28 | C-28 | 203-A Floor Drain | 12/58 | | Active |
| 216-A-29 | None | Cooling Water & Chem. Waste | 11/55 | - | Active |
| 216-A-30 | C-29 | Steam Condensate | 1/61 | - | Active |
| 216-A-31 | C-30 | Organic Waste | Not Used | | Replace. for A-2 |

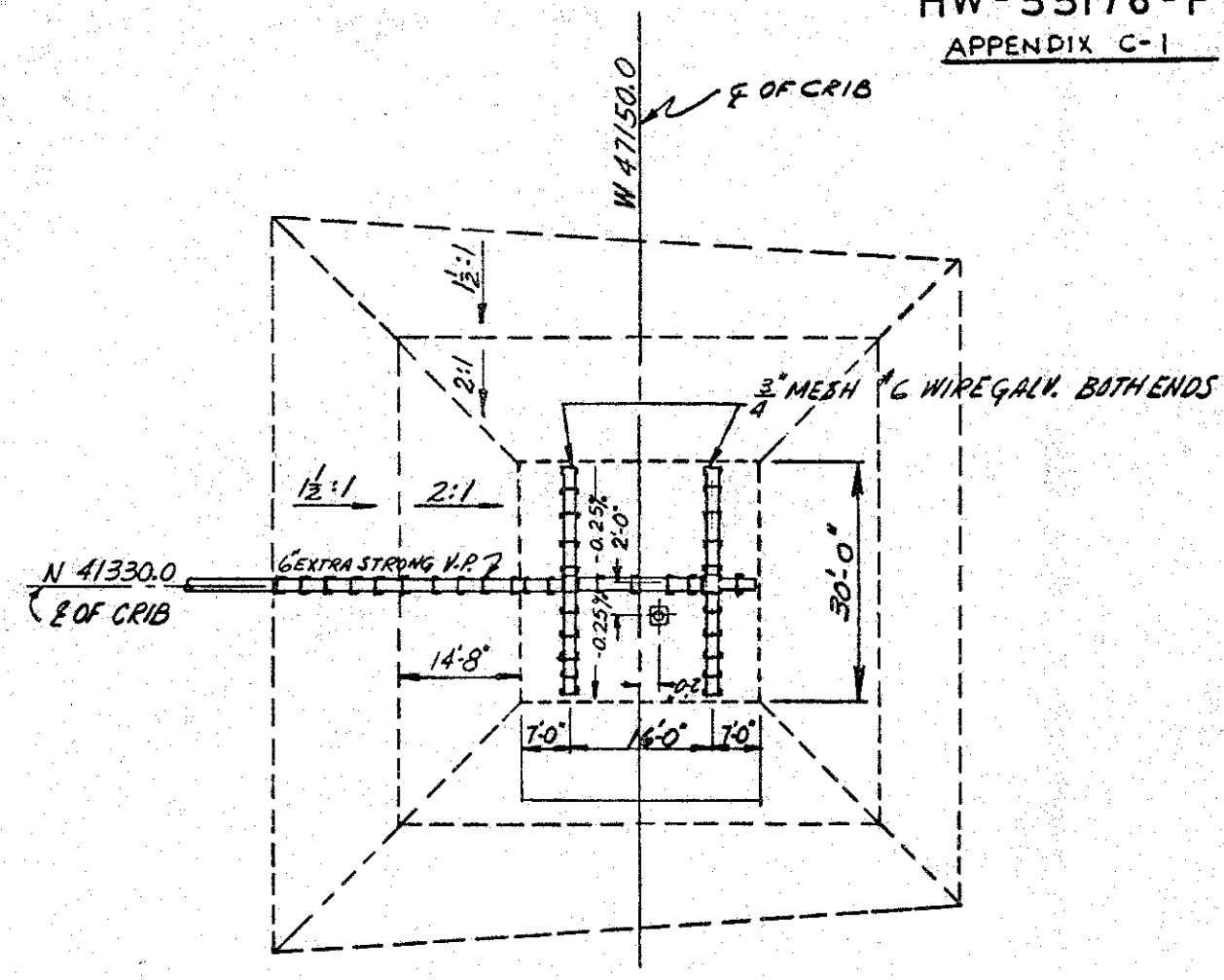


PLAN

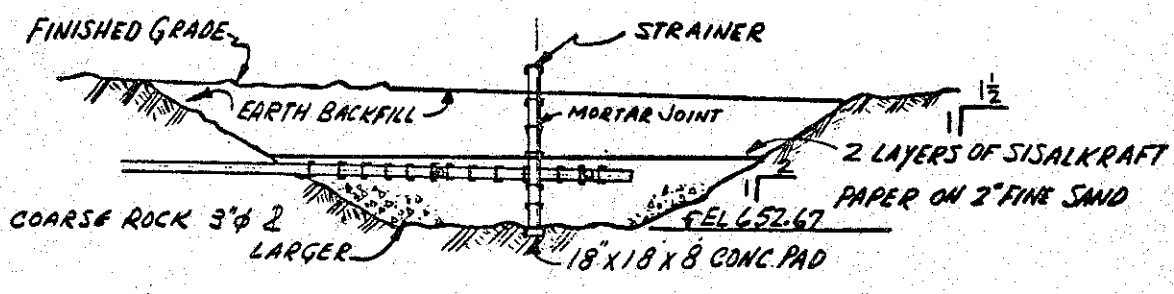


SECTION

CRIB WAS EXCAVATED, ROCKFILL WAS MADE DISTRIBUTION SYSTEM WAS BUILT AND CRIB WAS ABANDONED.

TAKEN FROM H-2-56016

216-A-1

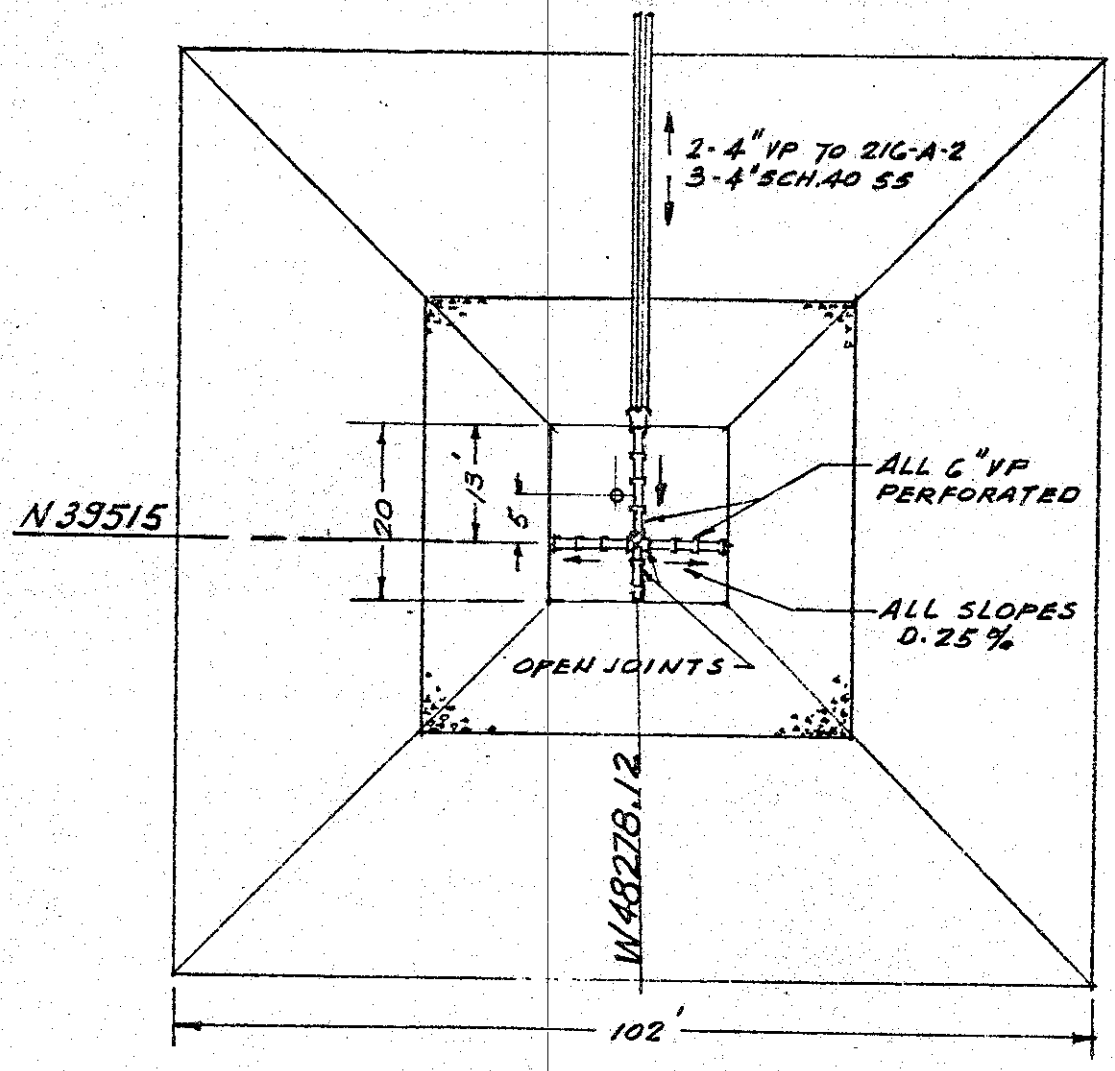


PLAN

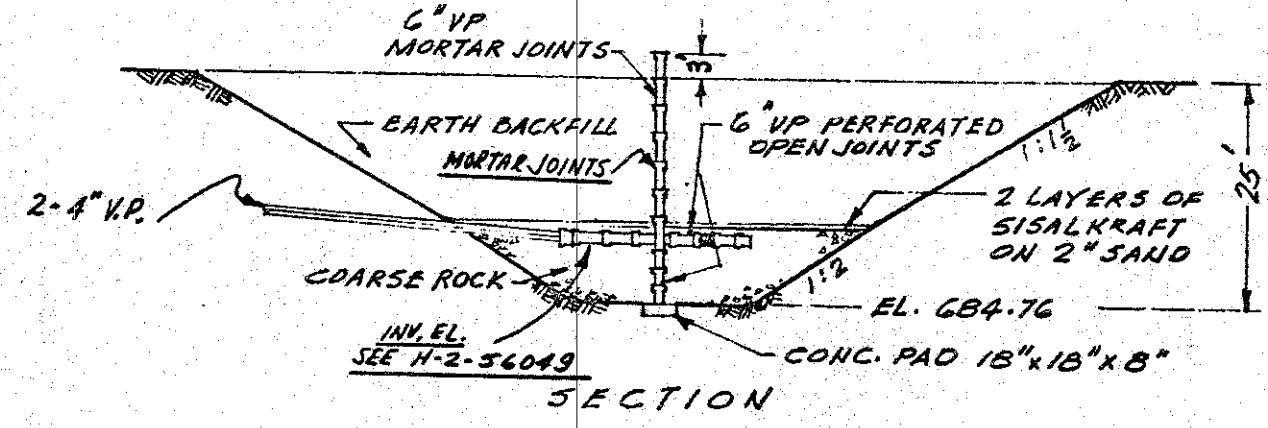


SECTION

TAKEN FROM H-2-56050

PUREX UNDERGROUND ROCK CRIB — 216-A-2

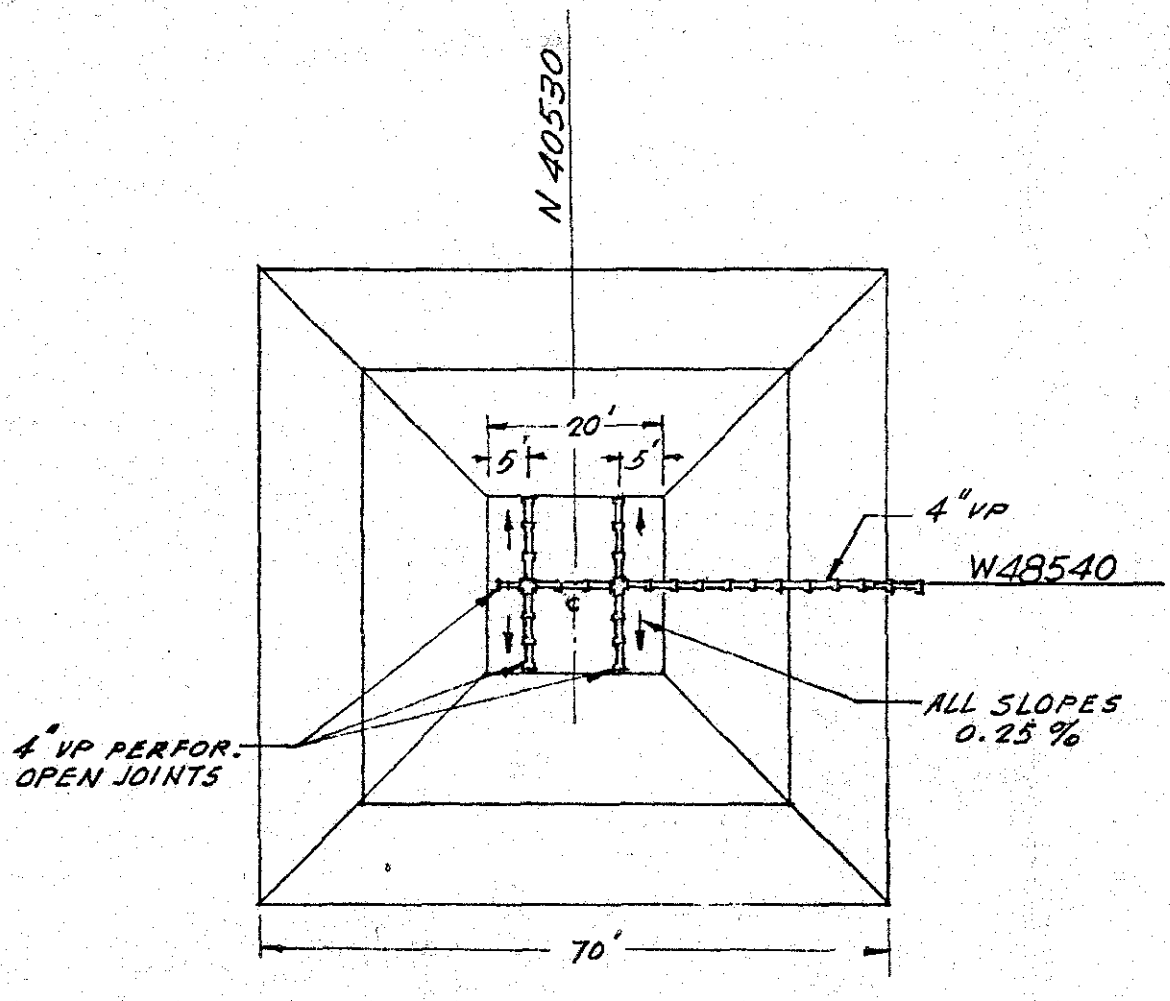


PLAN

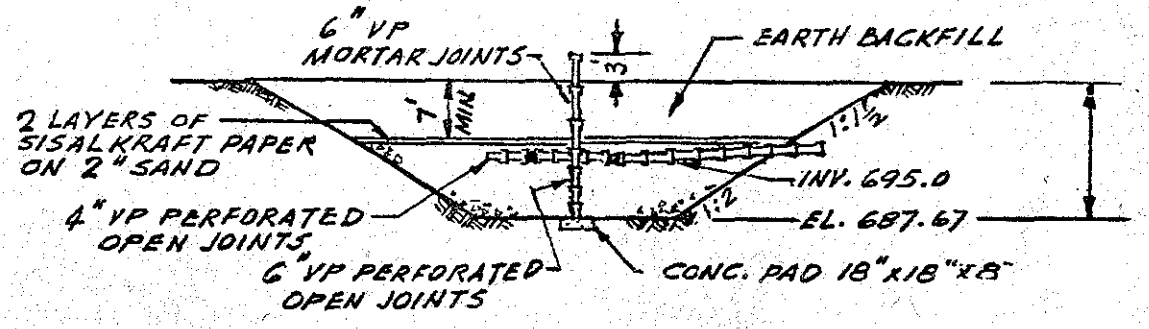


SECTION

TAKEN FROM
H-2-56050

PUREX UNDERGROUND ROCK CRIB - 216-A-3

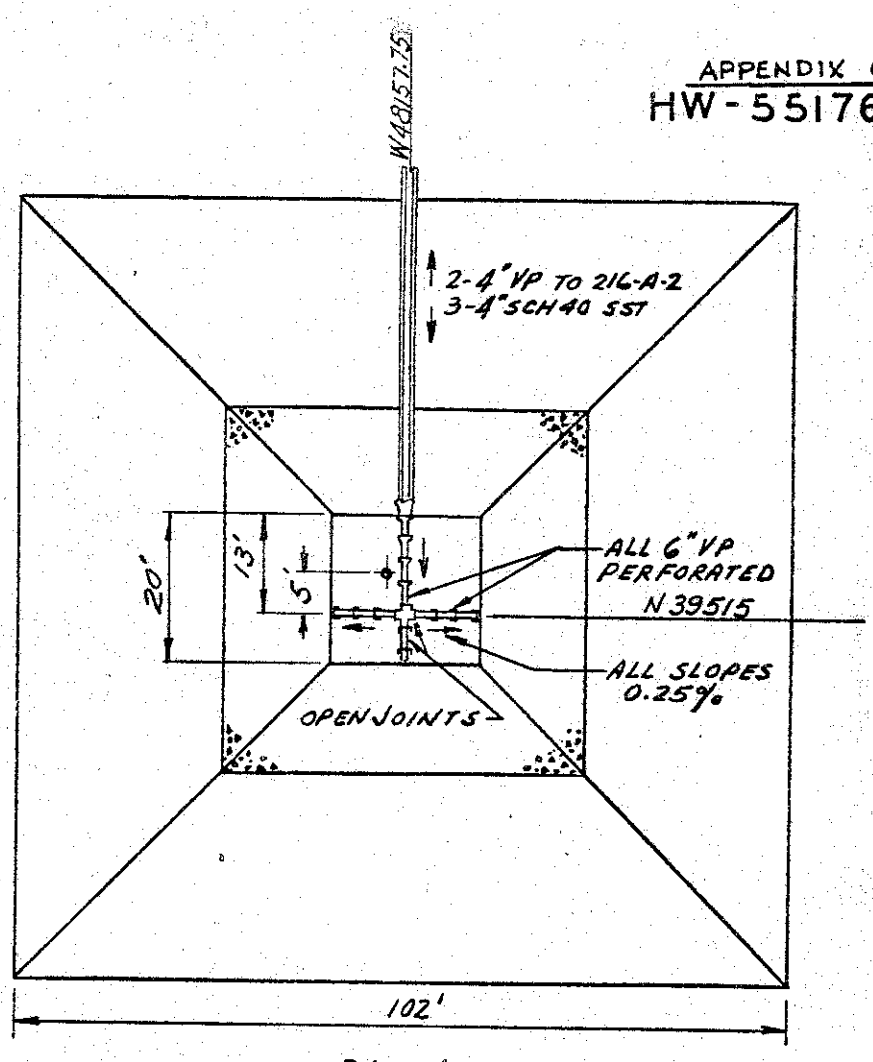


PLAN

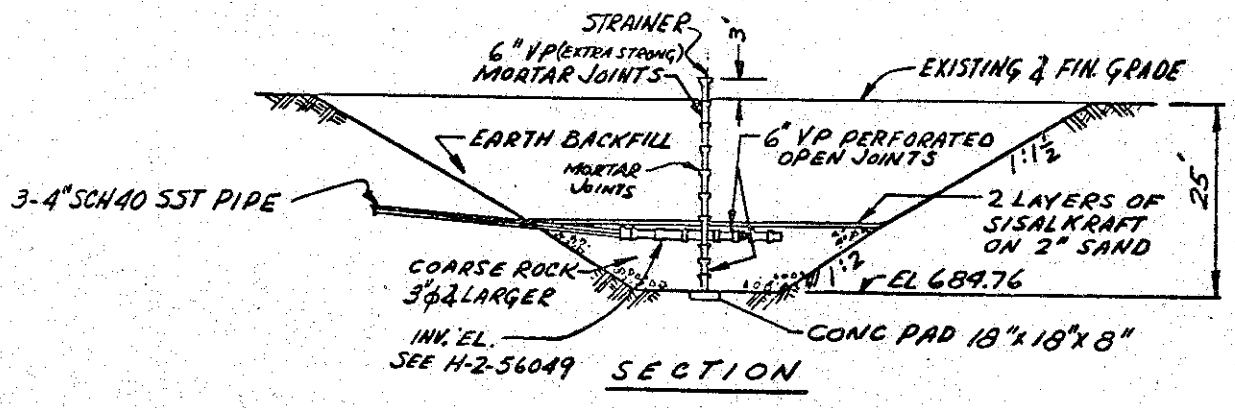


SECTION

TAKEN FROM H-2-56050

PUREX UNDERGROUND ROCK CRIB — 216-A-4

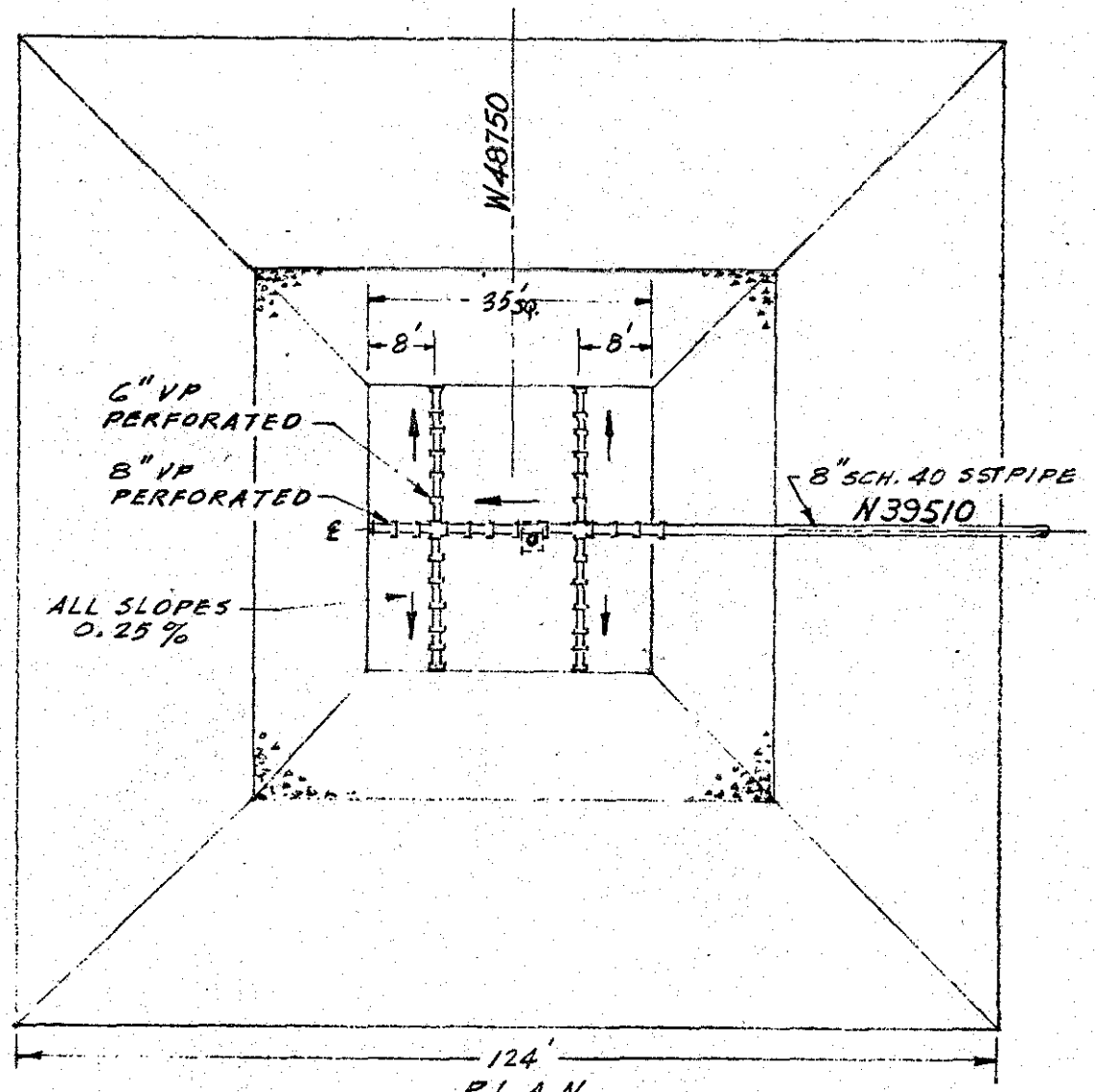


PLAN

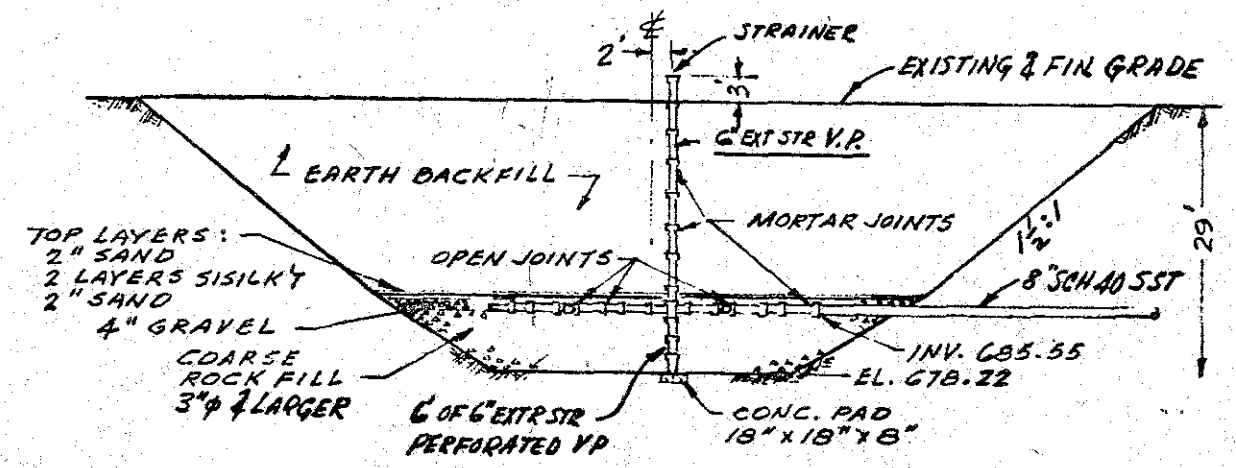


SECTION

TAKEN FROM H-2-56050

PUREX UNDERGROUND ROCK CRIB - 216-A-5

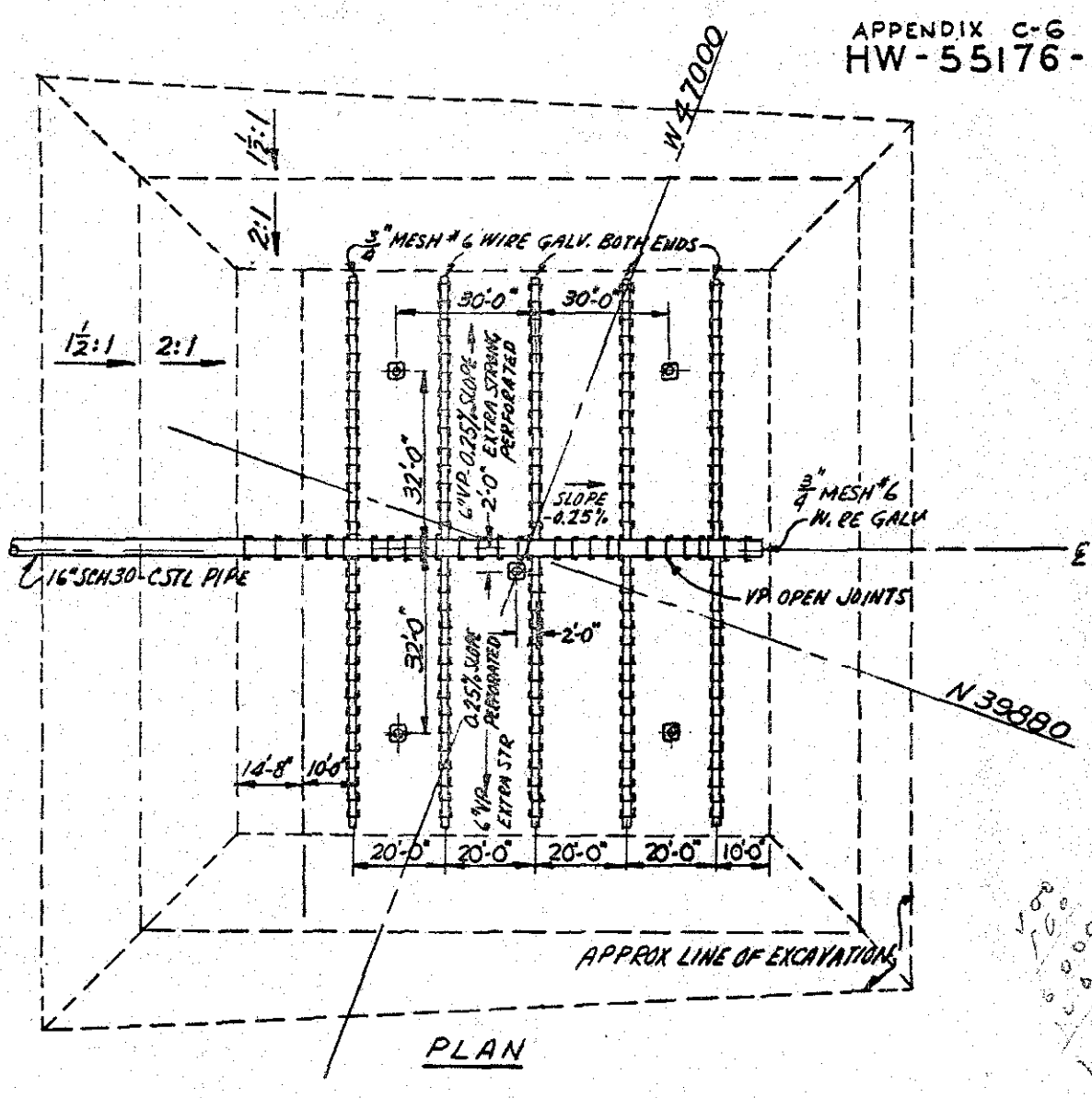


PLAN

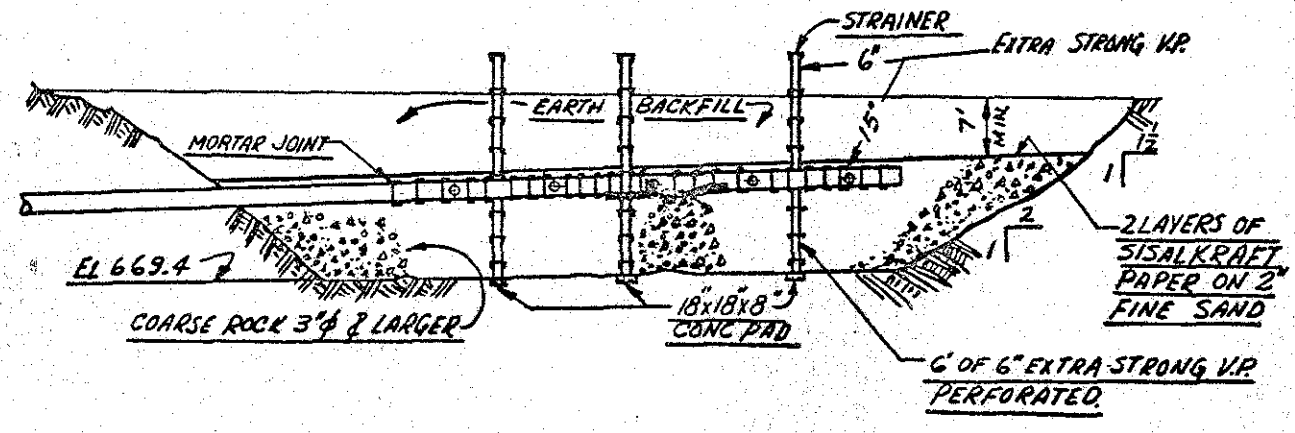


SECTION
CRIB 216-A-6

FROM H-2-56016

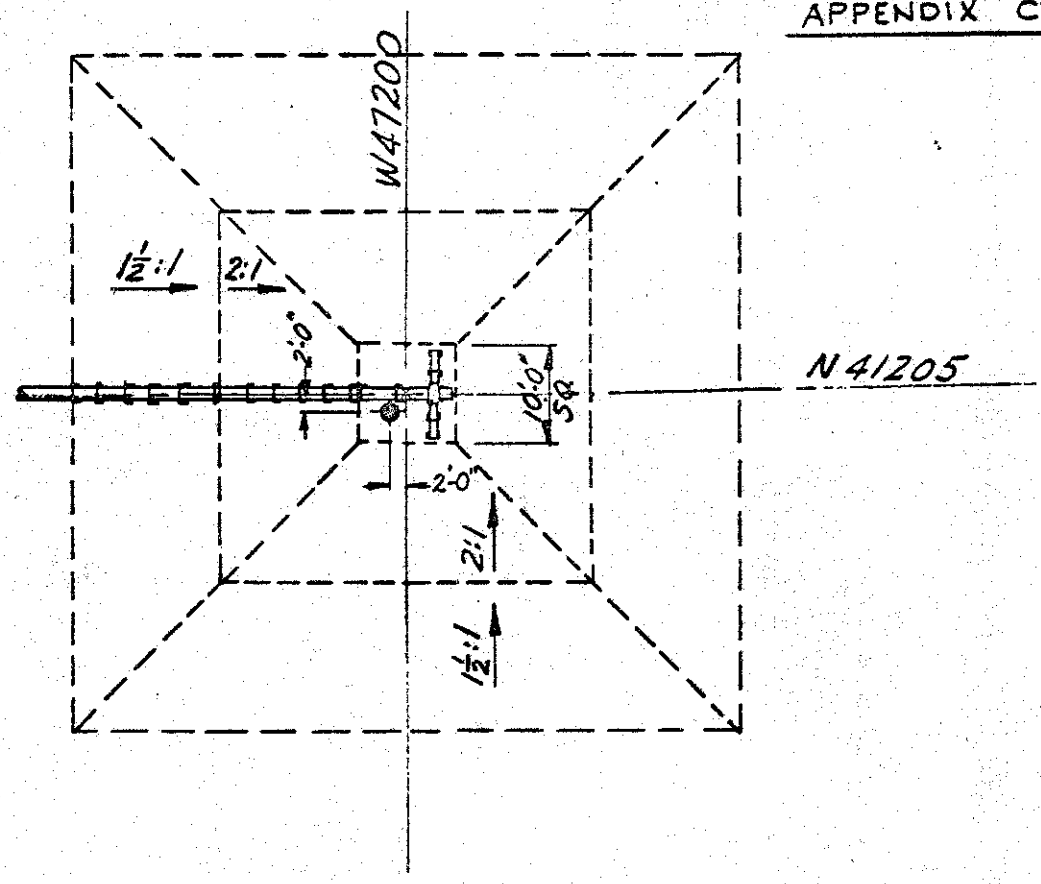


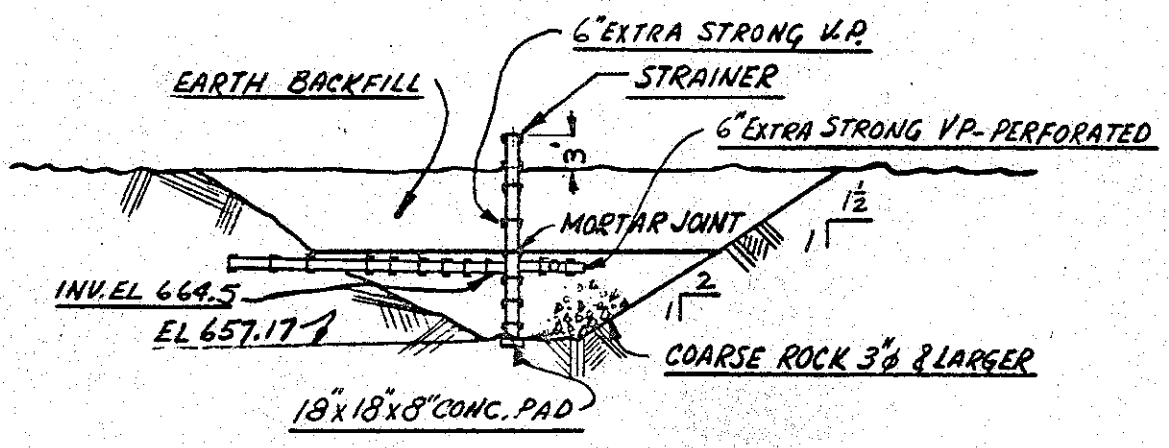


CRIB 216-A-7 FROM H-2-56016

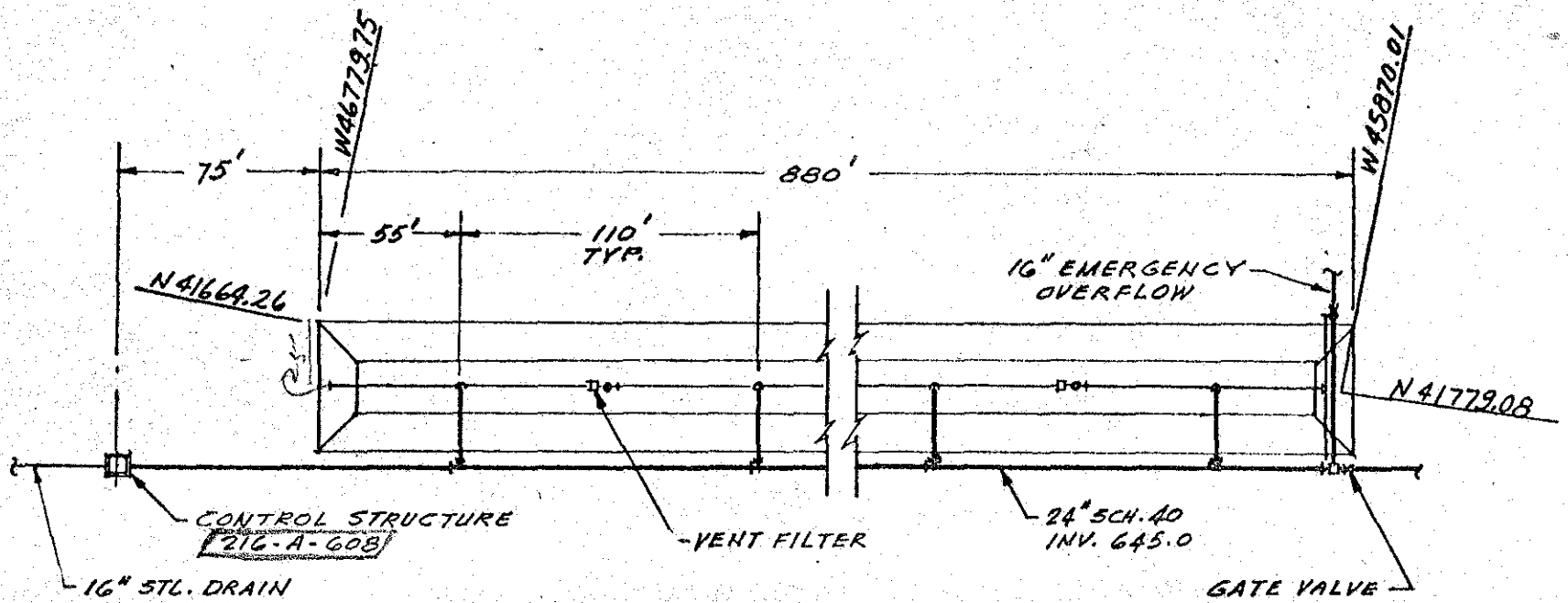


PLOT PLAN

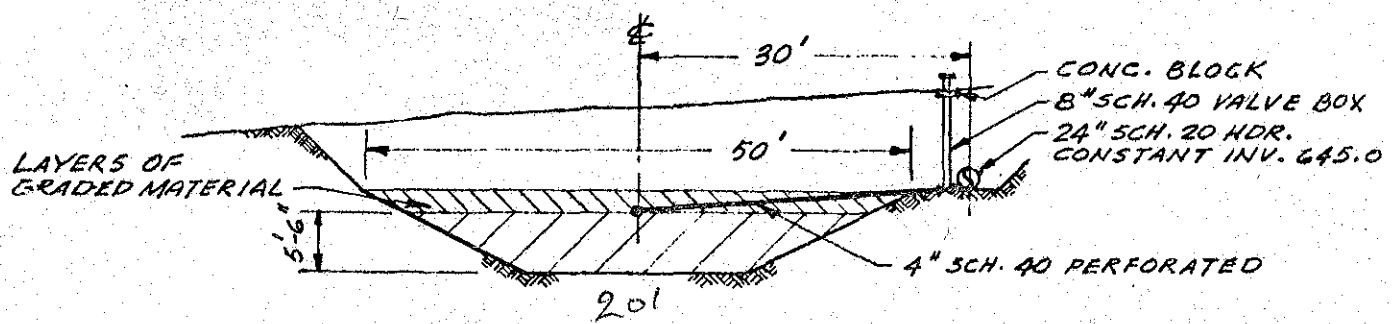


SECTION

TAKEN FROM
H-2-56158
H-2-56157

PUREX CONDENSATE & COOLING WATER
CRIB 216-A-8

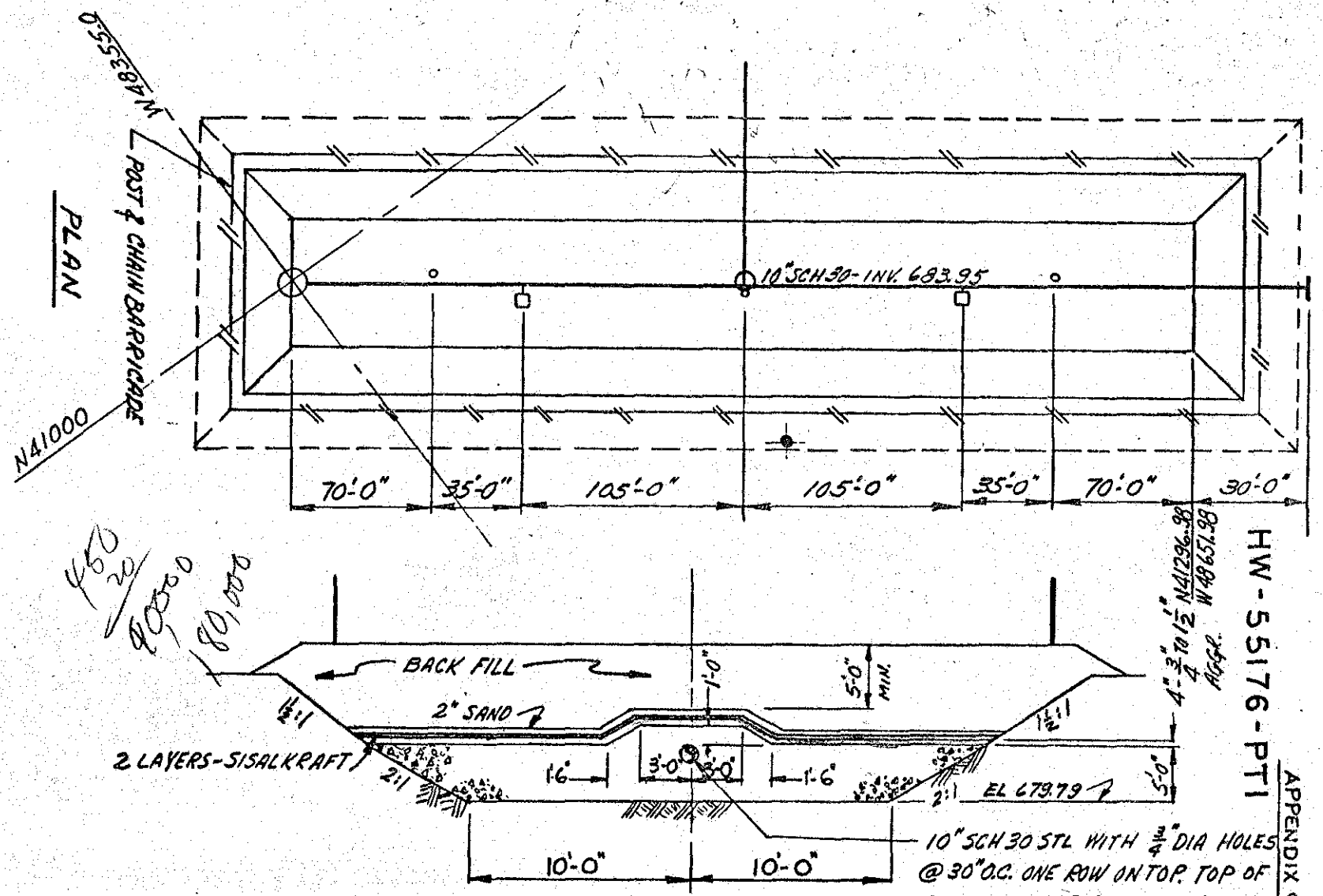


SECTION
216-A-9

FROM H-2-55577

HW-55176-PT1

APPENDIX C-9

HW 55176-PART 1
APPENDIX C-10
DRAWN JLSIMEK 12/18/5

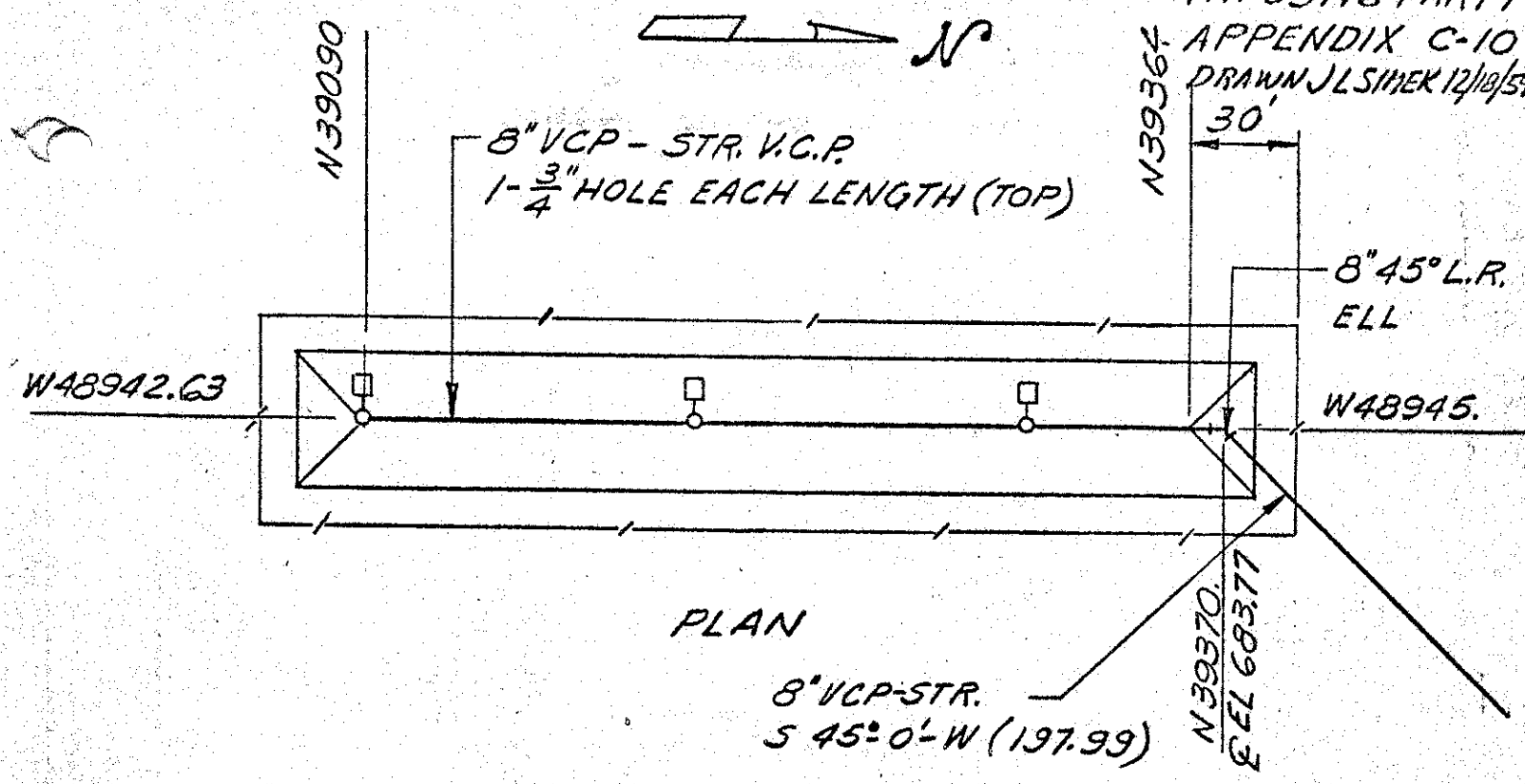


PLAN

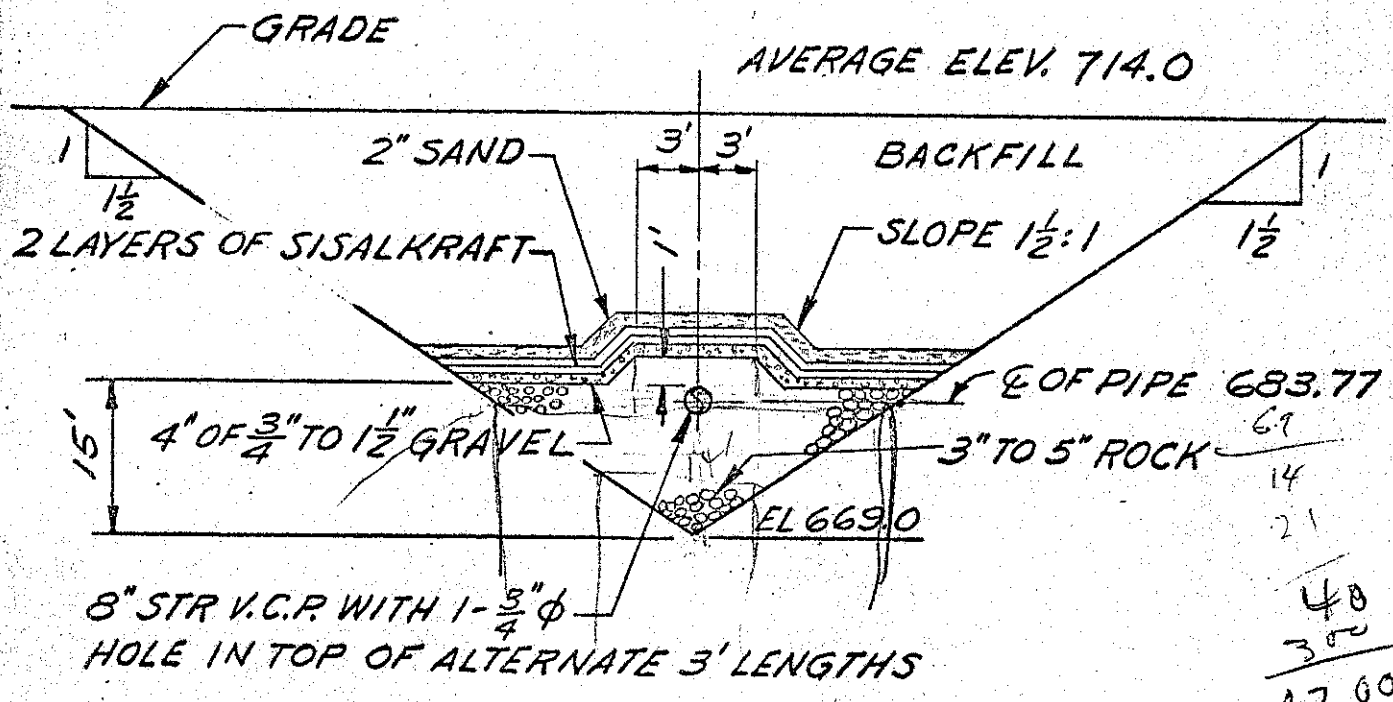


SECTION

69
14
21
40
30
12,000
283

683
400
283

3.4 x 10^6 ft^3
7.5
25 x 10^6 gal.

216-A-10
H-2-55576

10 C.V.

12

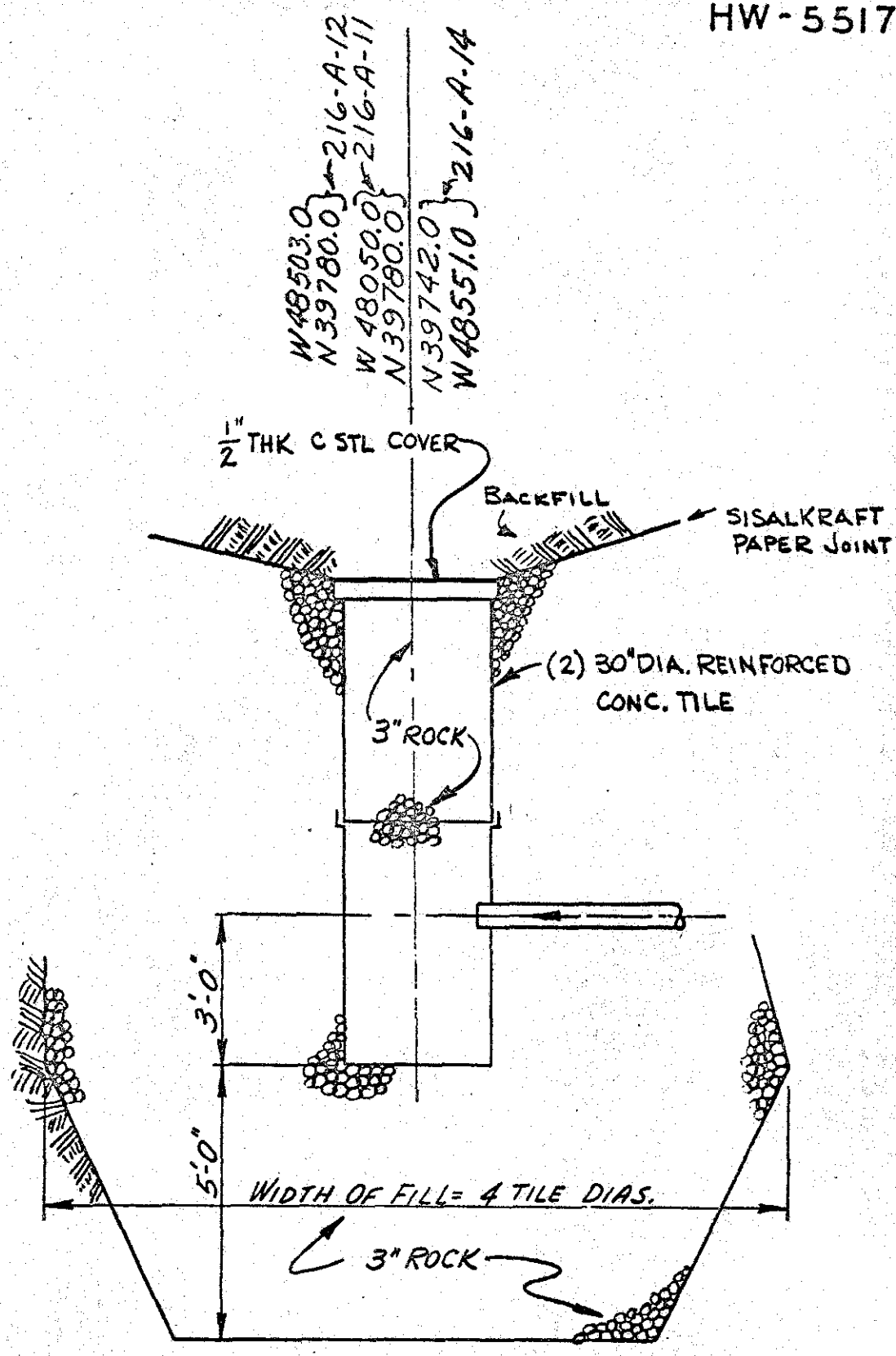


216-A-11
216-A-12
216-A-14

TAKEN FROM H-2-55090M

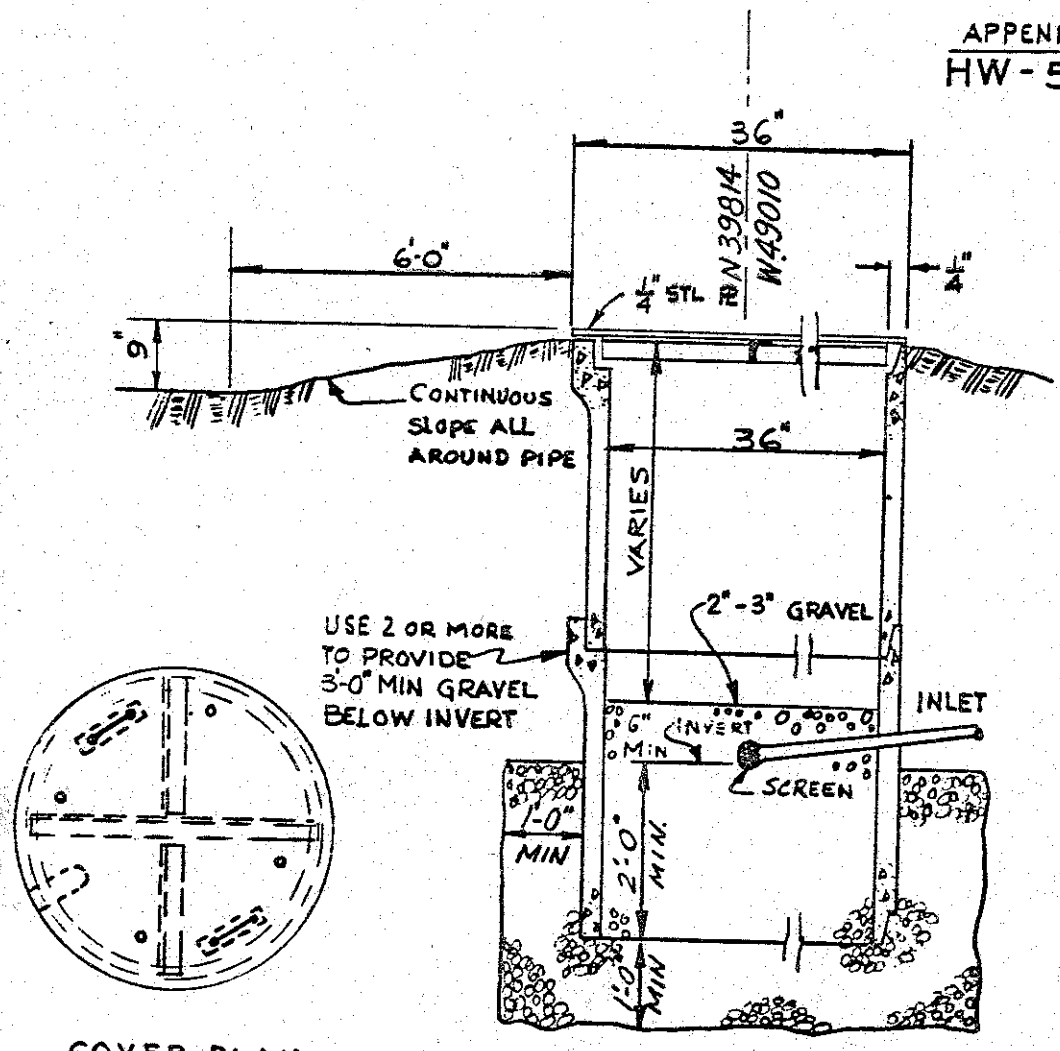


COVER PLAN

SECTION

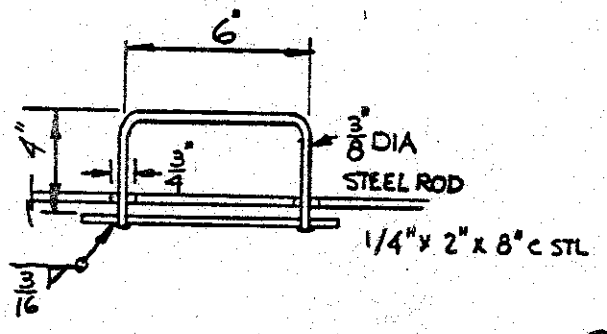


LIFTING HANDLE

TAKEN FROM SK-2-2568

216-A-13

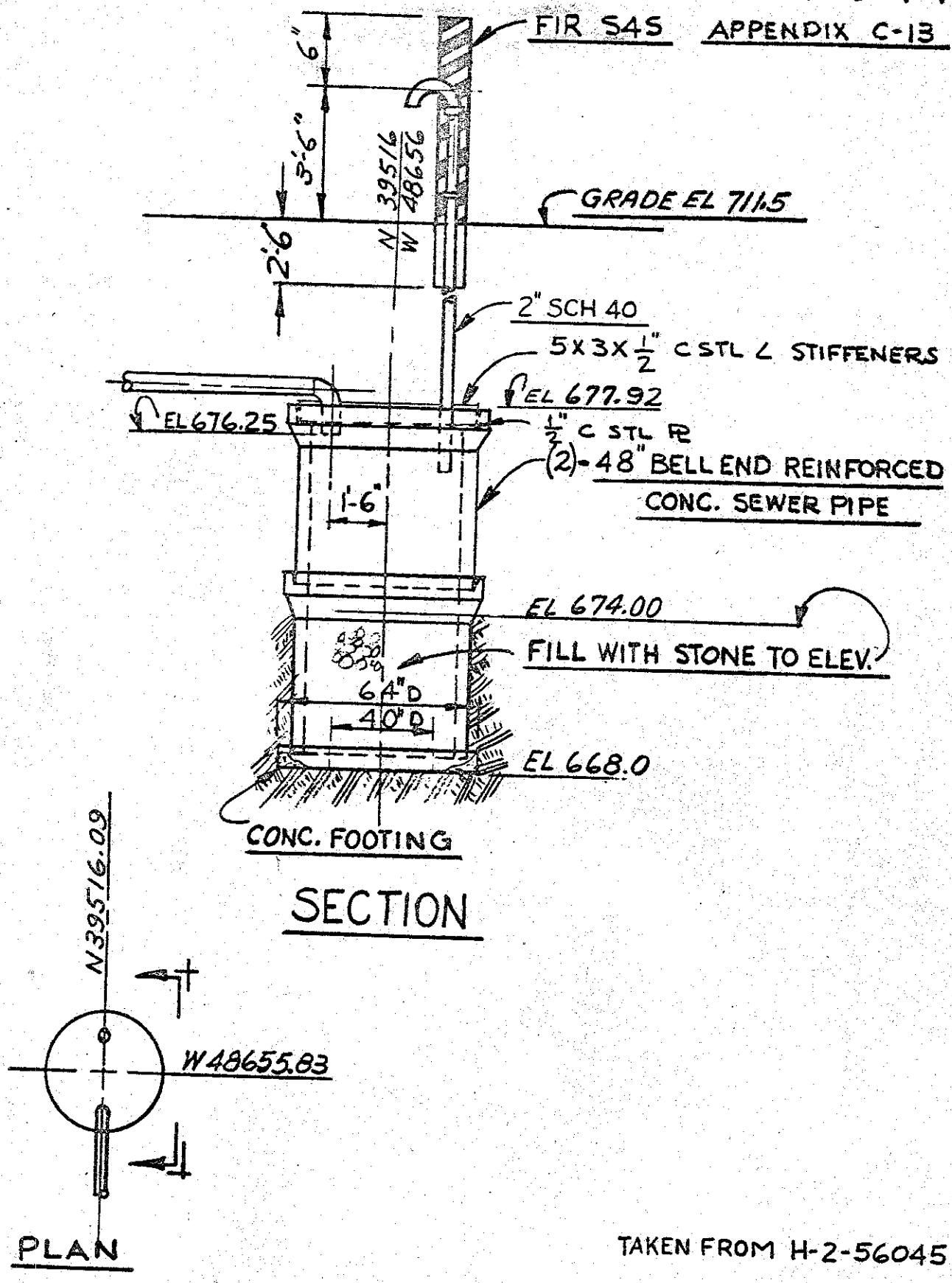


TAKEN FROM H-2-56045

216-A-15

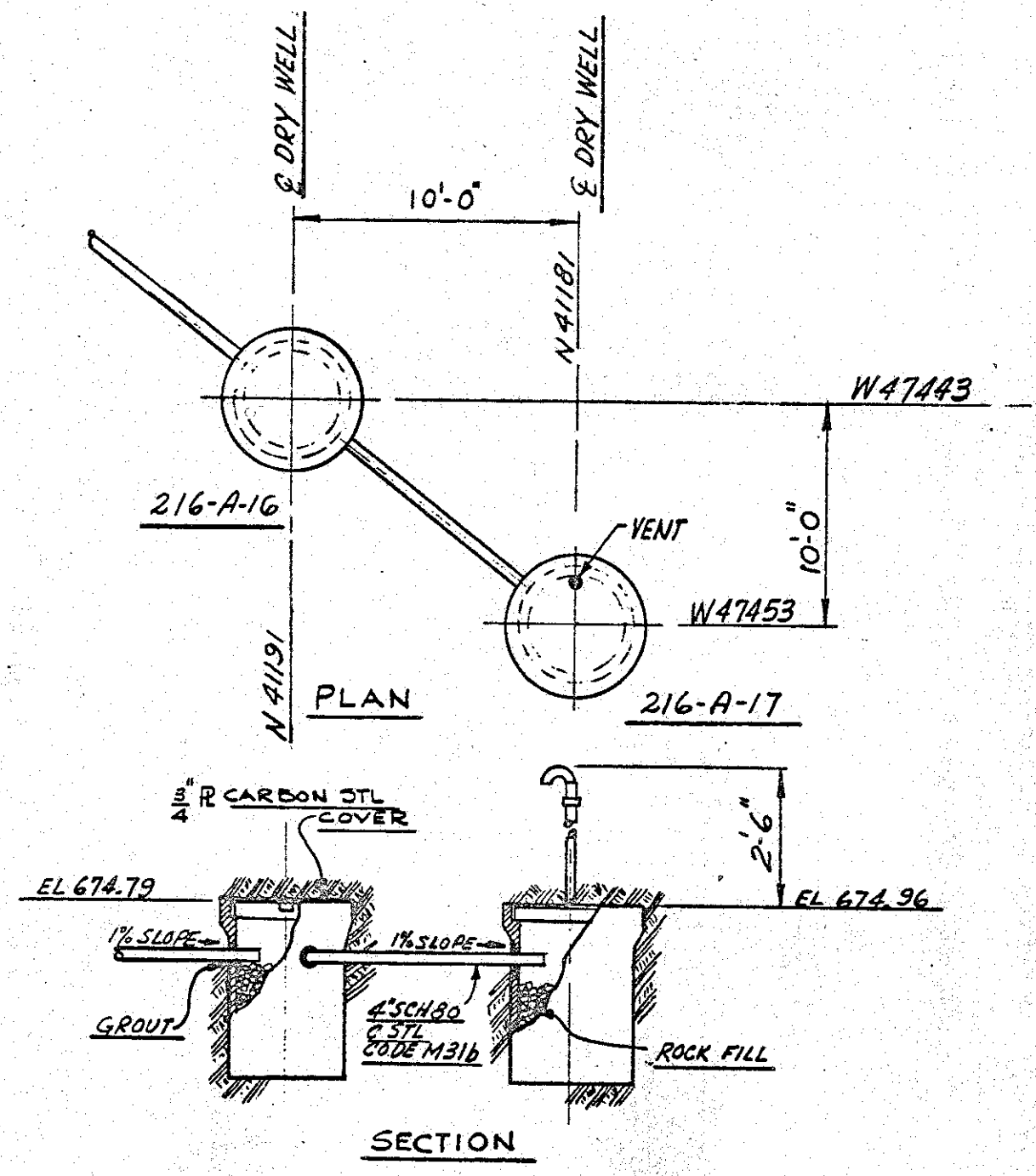


216-A-16

216-A-17

TAKEN FROM H-2-55943

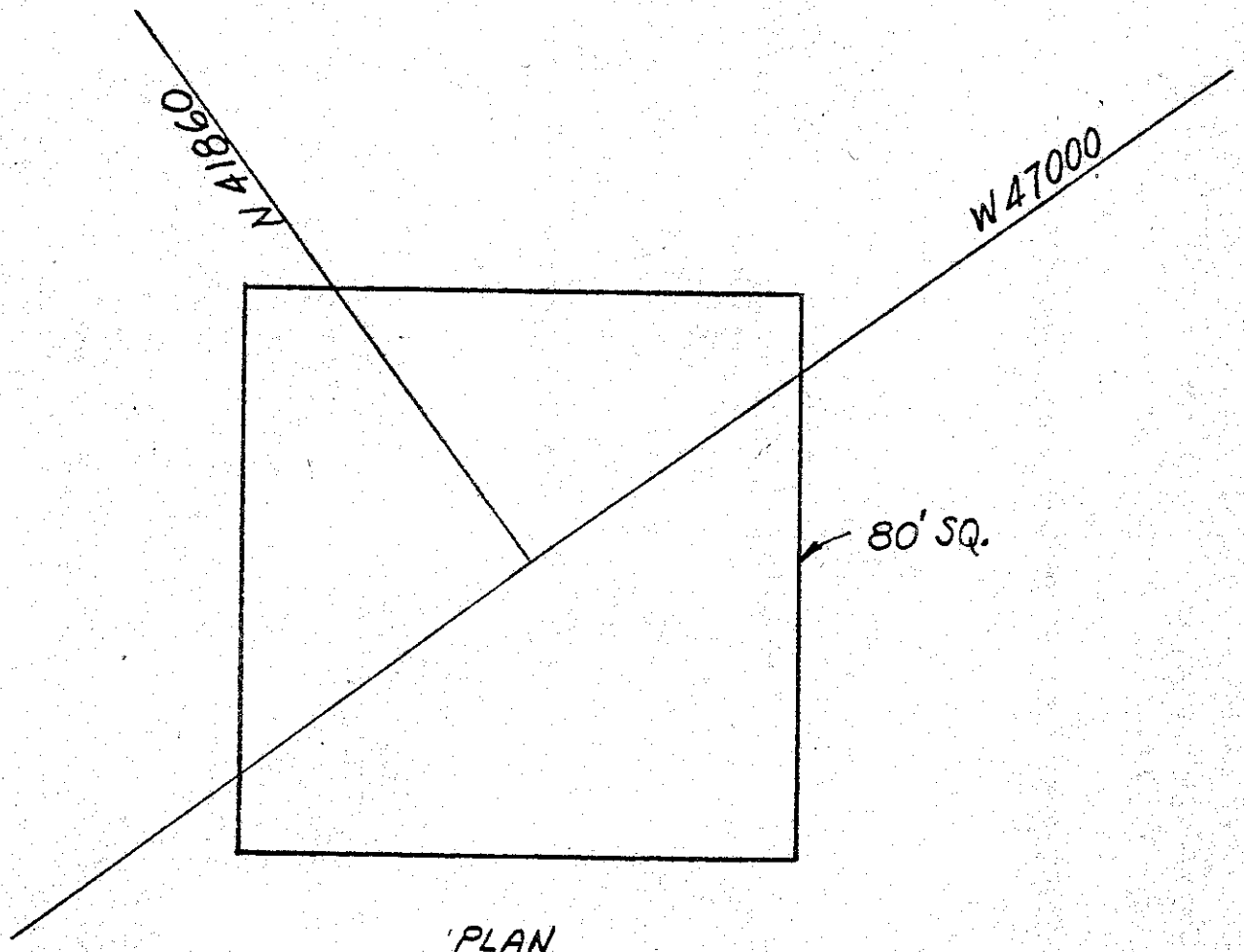


PLAN

EXCAVATION FILLED - CRIB NEVER BUILT

START-UP WASTES DISPOSED IN EXCAVATION

216-A-18

TAKEN FROM H-2-55900

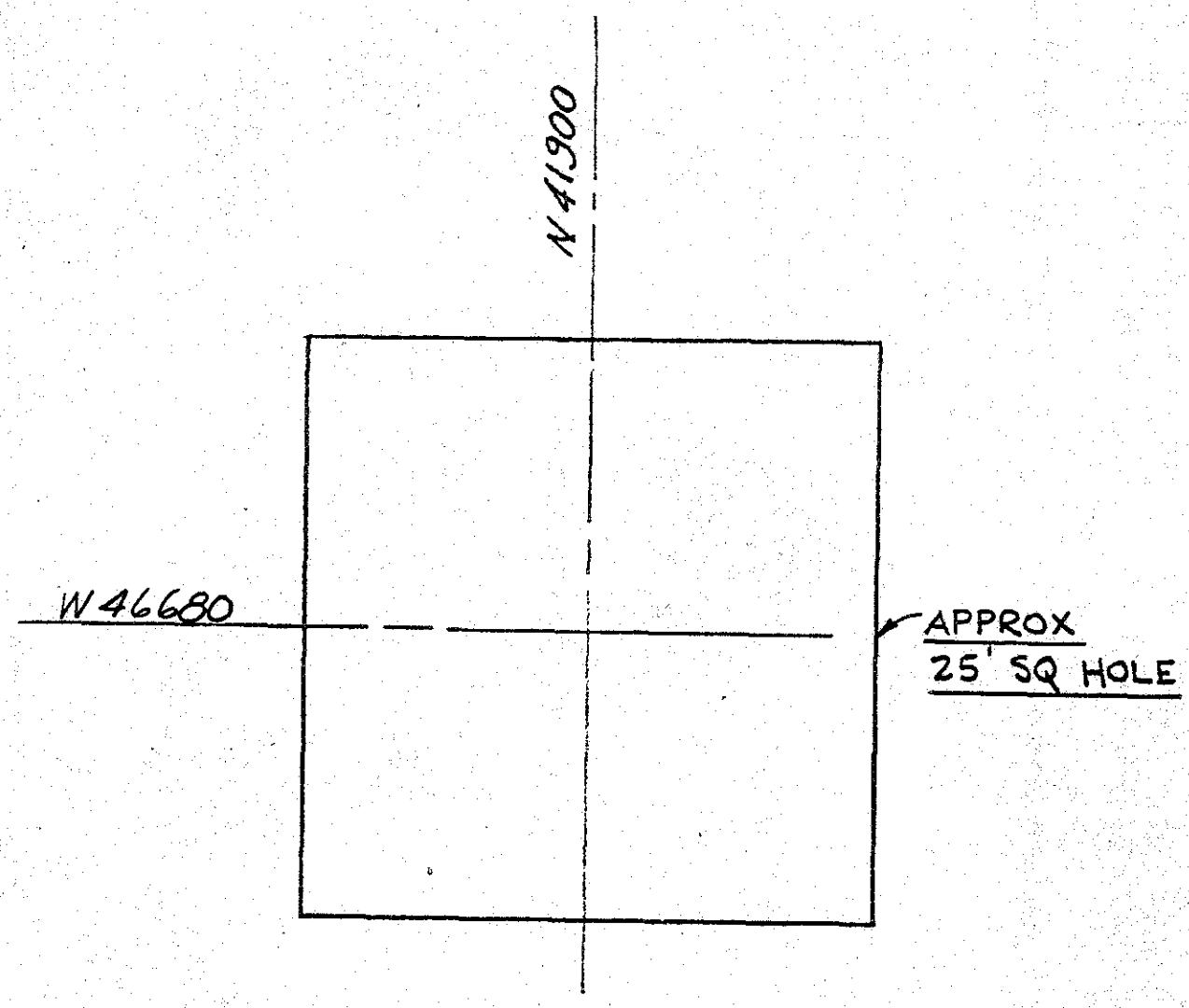


TEST HOLE EXCAVATED BY DRAGLINE
START-UP WASTES DISPOSED IN HOLE
BEFORE BACK-FILLING.

216-A-19

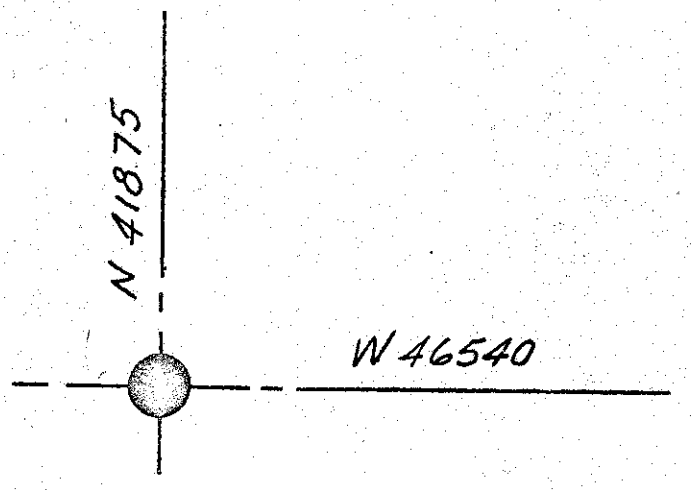


PLAN

TEST HOLE

TEST HOLE EXCAVATED BY DRAGLINE
START-UP WASTES DISPOSED IN HOLE
BEFORE BACK-FILLING.

216-A-20

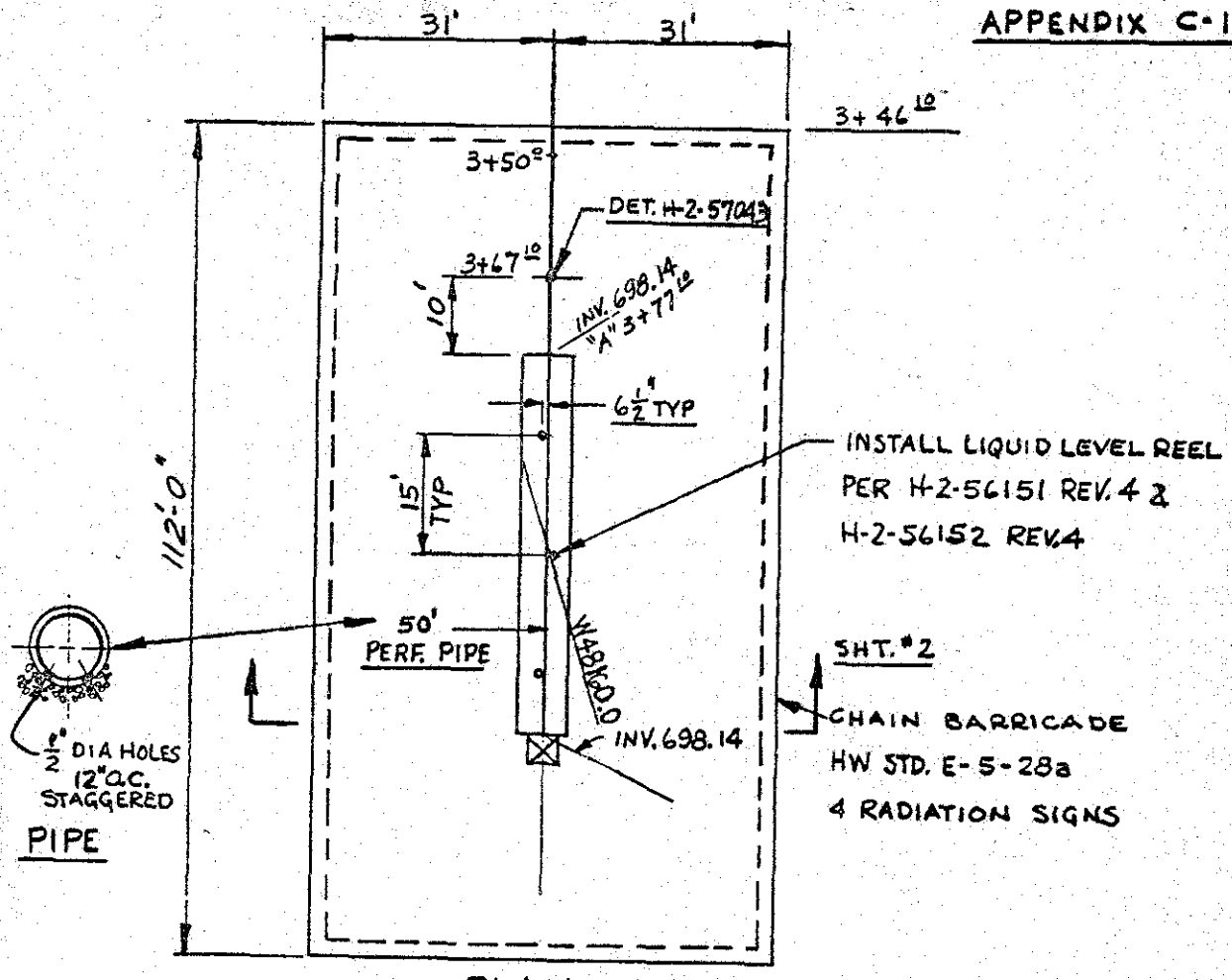


PLAN

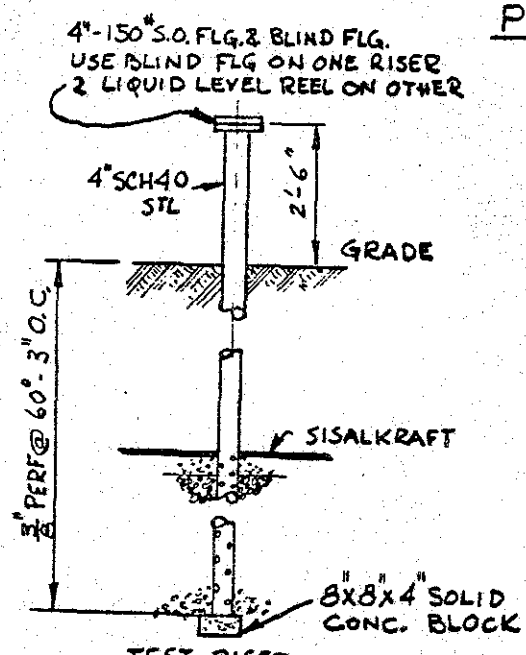


TEST RISER

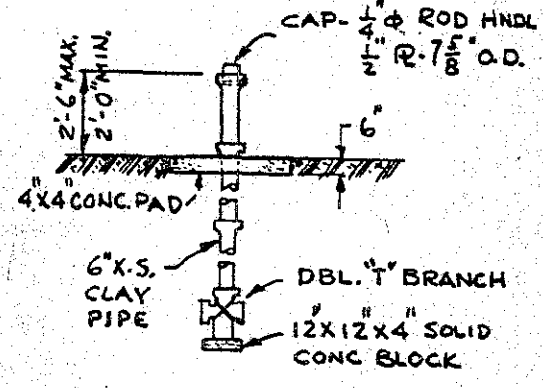


SAMPLER

216-A-21-SHT. 1

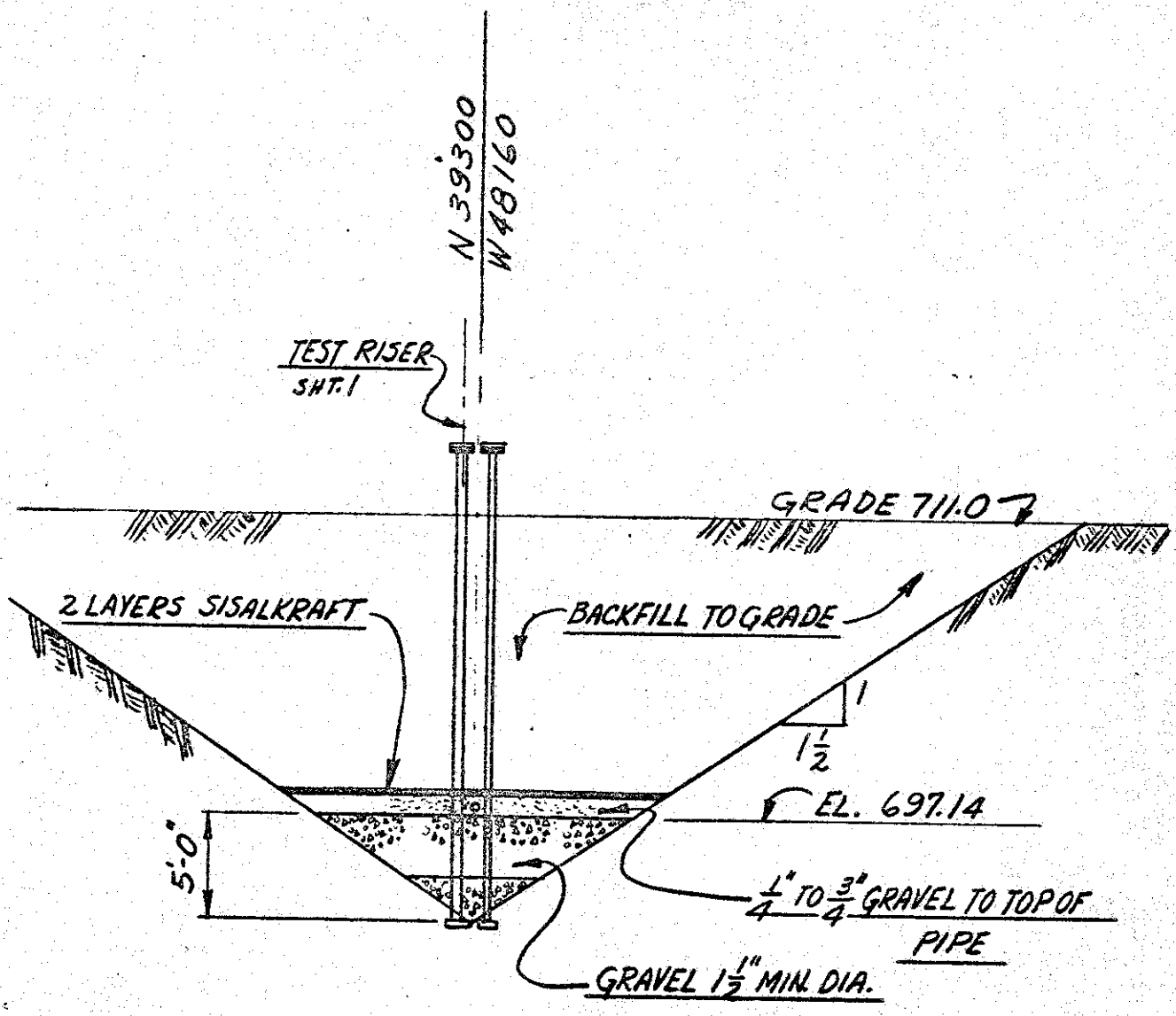


SECTION

CRIB-216-A-21- SHT. 2

TAKEN FROM H-2-57043

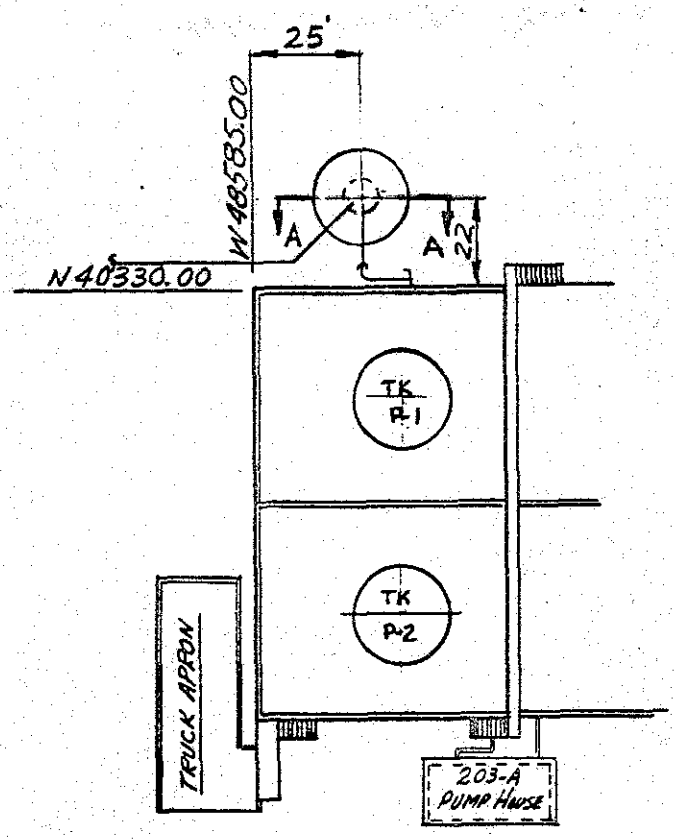


PLAN

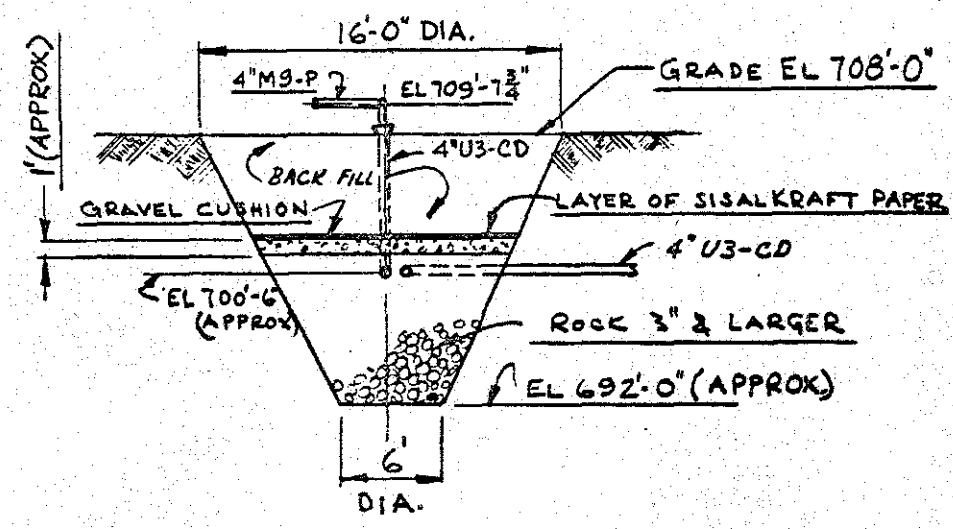


SECTION A-A

FRENCH DRAIN

216-A-22

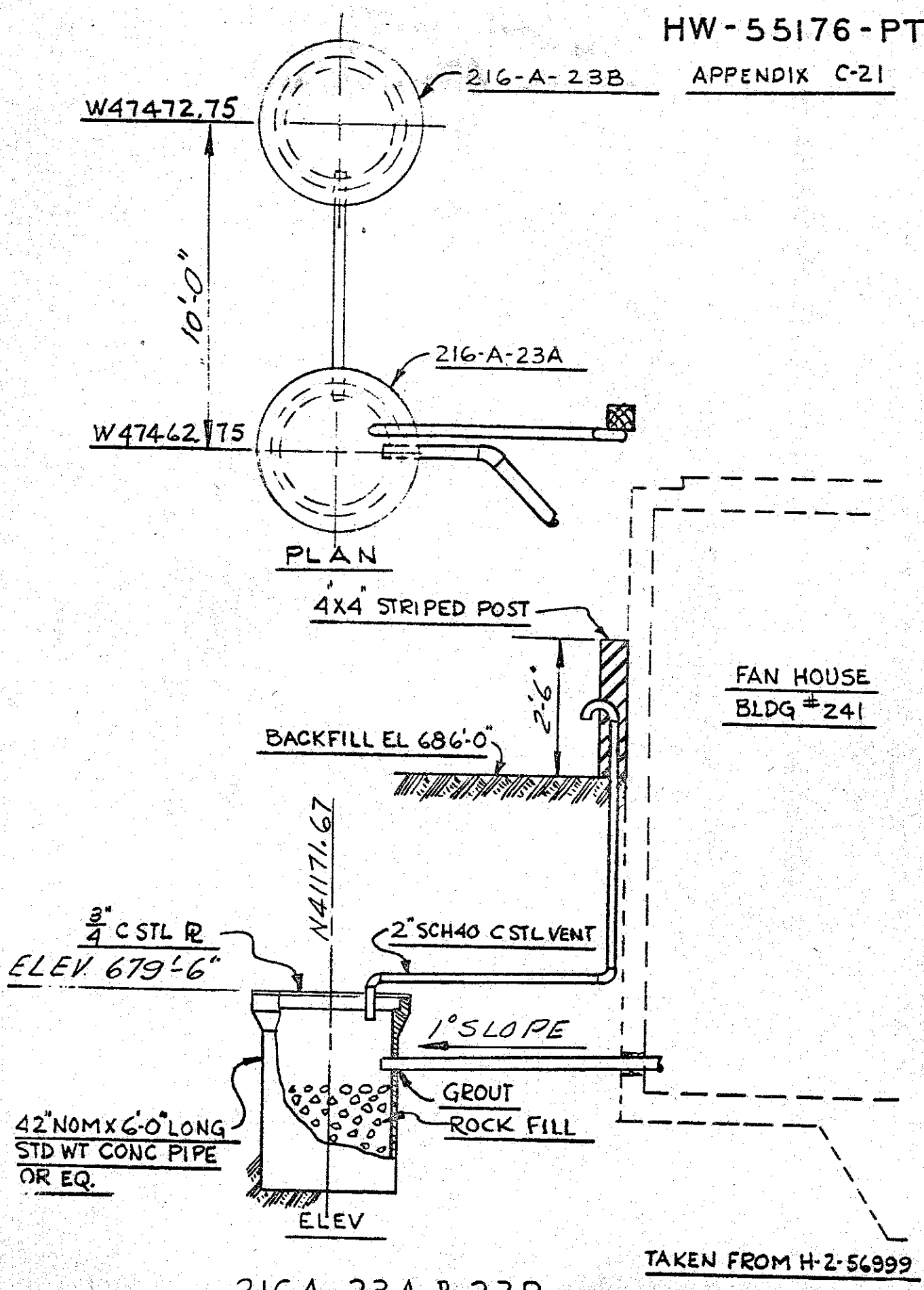
216-A-23B
W47472.75
10'-0"
216-A-23A
W47462.75
PLAN
4"X4" STRIPED POST
2'-6"
FAN HOUSE
BLDG #241
BACKFILL EL 686'-0"
N41171.67
3/4" C STL PL
ELEV. 679'-6"
2" SCH40 C STL VENT
1° SLOPE
GROUT
ROCK FILL
42" NOM X 6'-0" LONG
STD WT CONC PIPE
OR EQ.
ELEV
TAKEN FROM H-2-56999

216A-23A & 23B

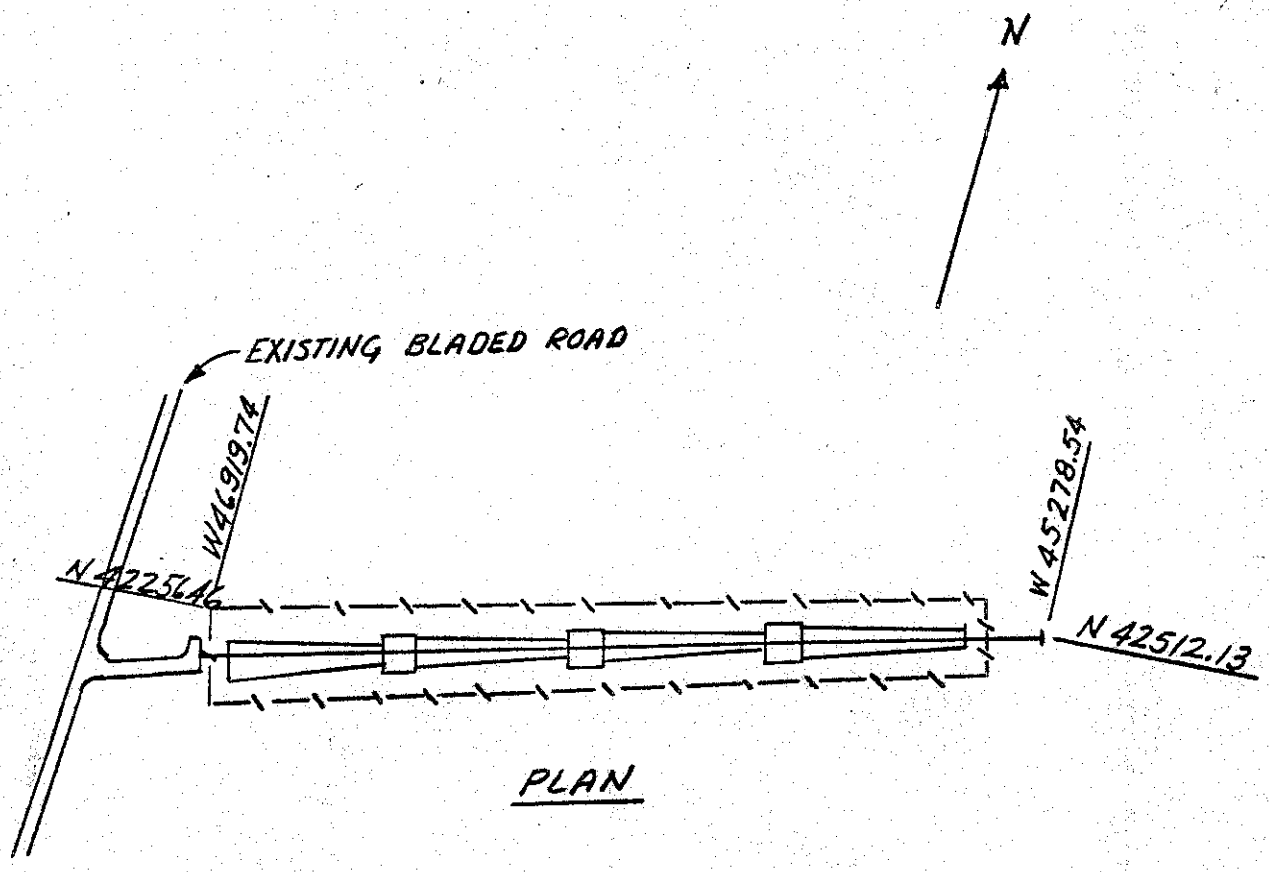


PLAN

TAKEN FROM H-2-56977

216-A-24
SHT NO. 1

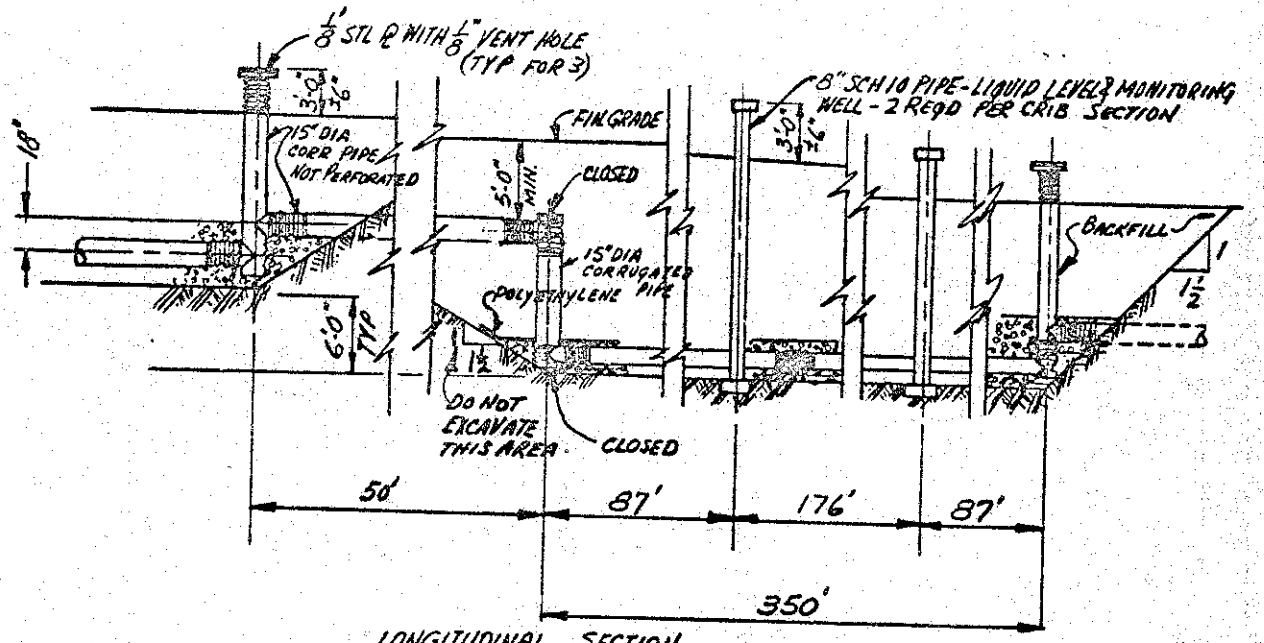


LONGITUDINAL SECTION

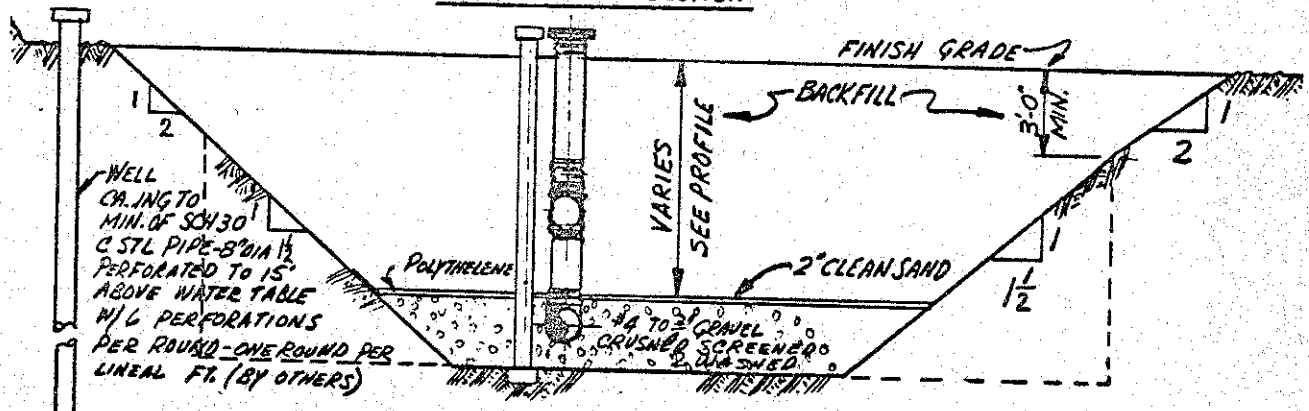


TRANSVERSE SECTION

WELL TO BOTTOM AT EL 360.0'

TAKEN FROM H-2-56978
H-2-56977

CRIB 216-A-24
SHT NO. 2

HW-55176-PT1
APPENDIX C-24
JJL 10-5-59

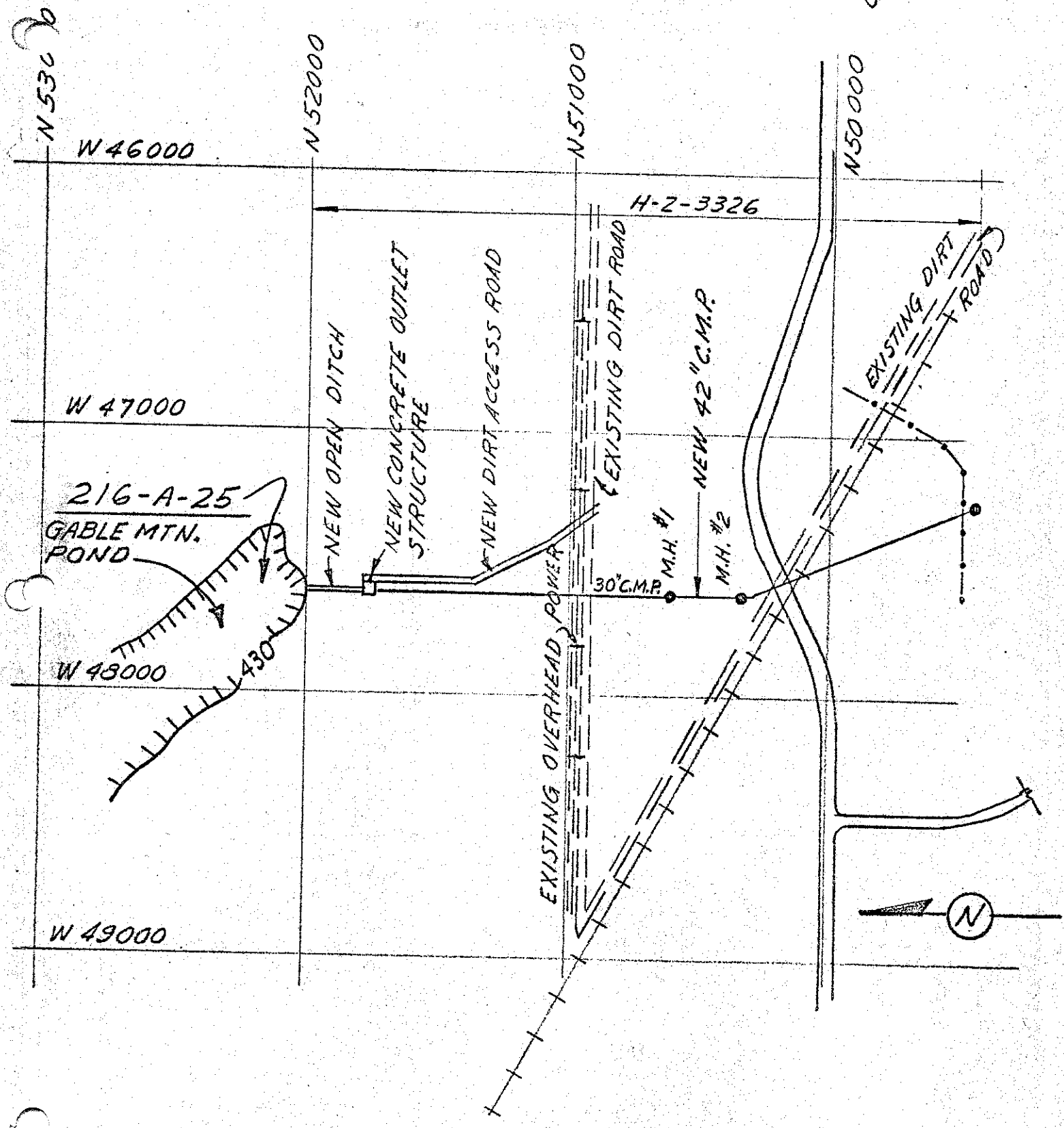


216-A-25
H-2-3325

HN-55176-P1 1
APPENDIX C-25
SHT. NO. 1

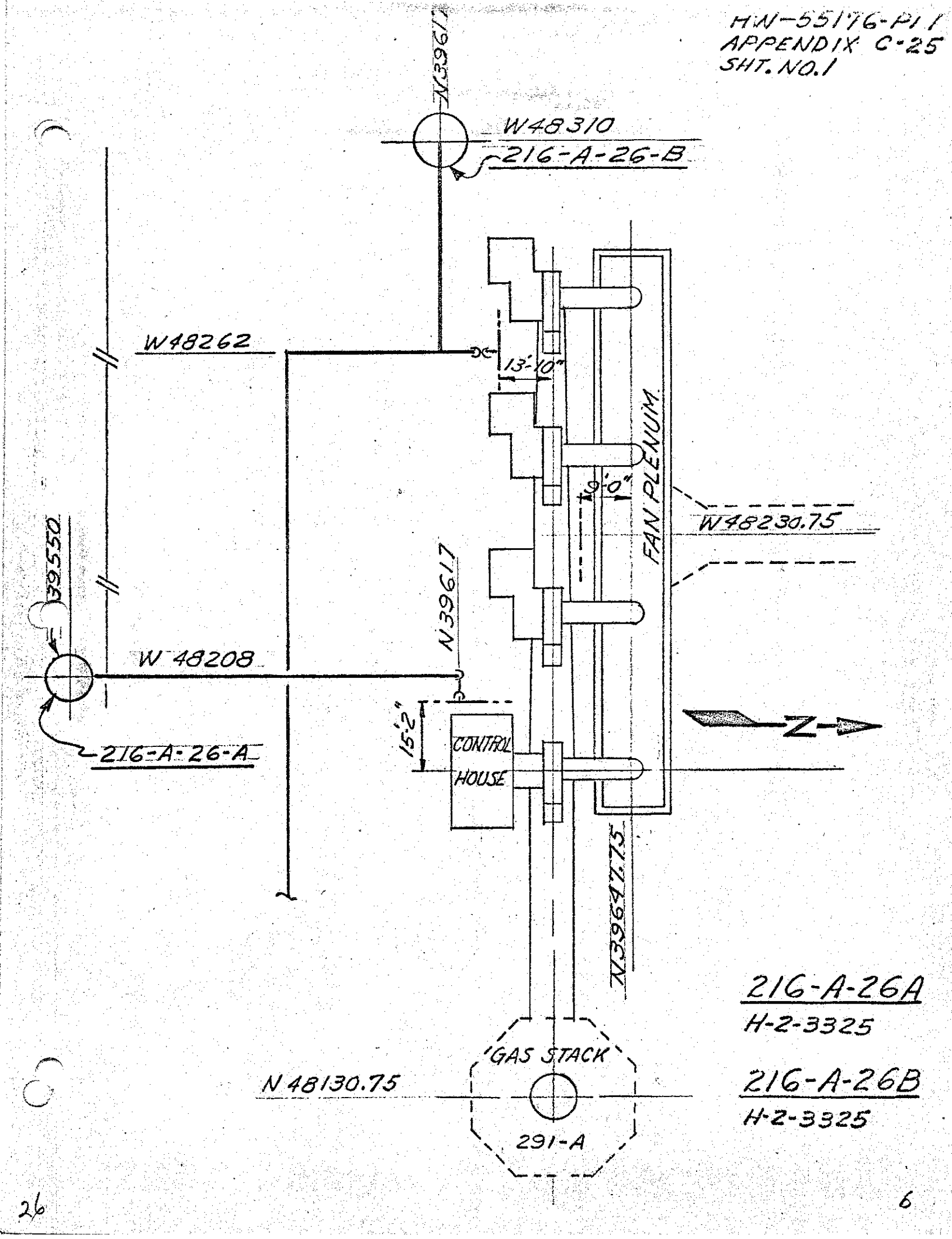

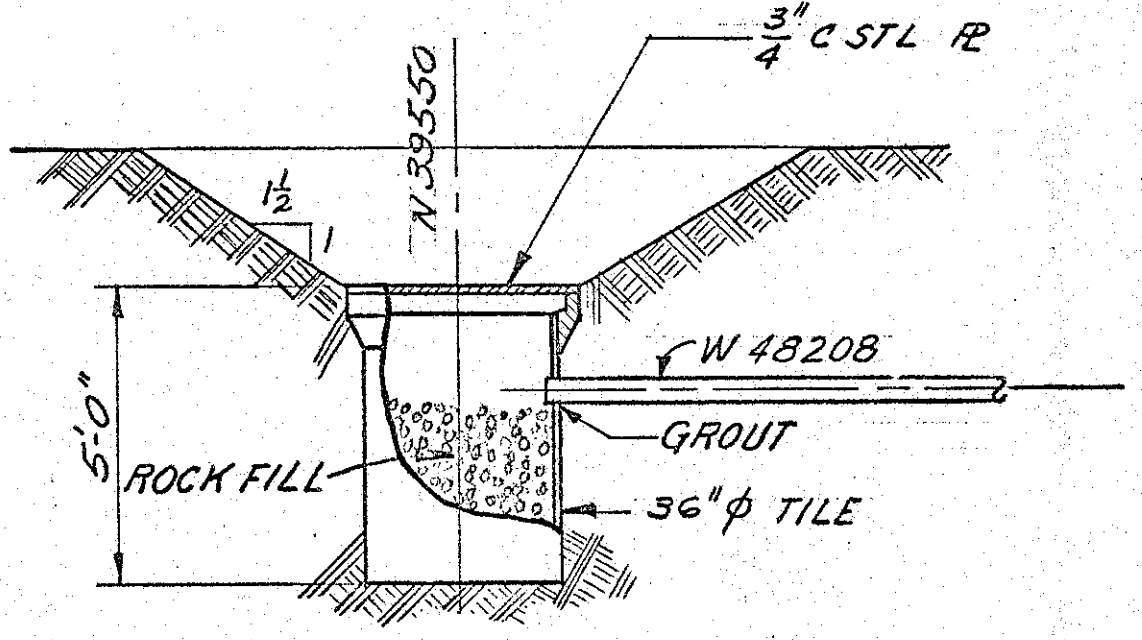


216-A-26A

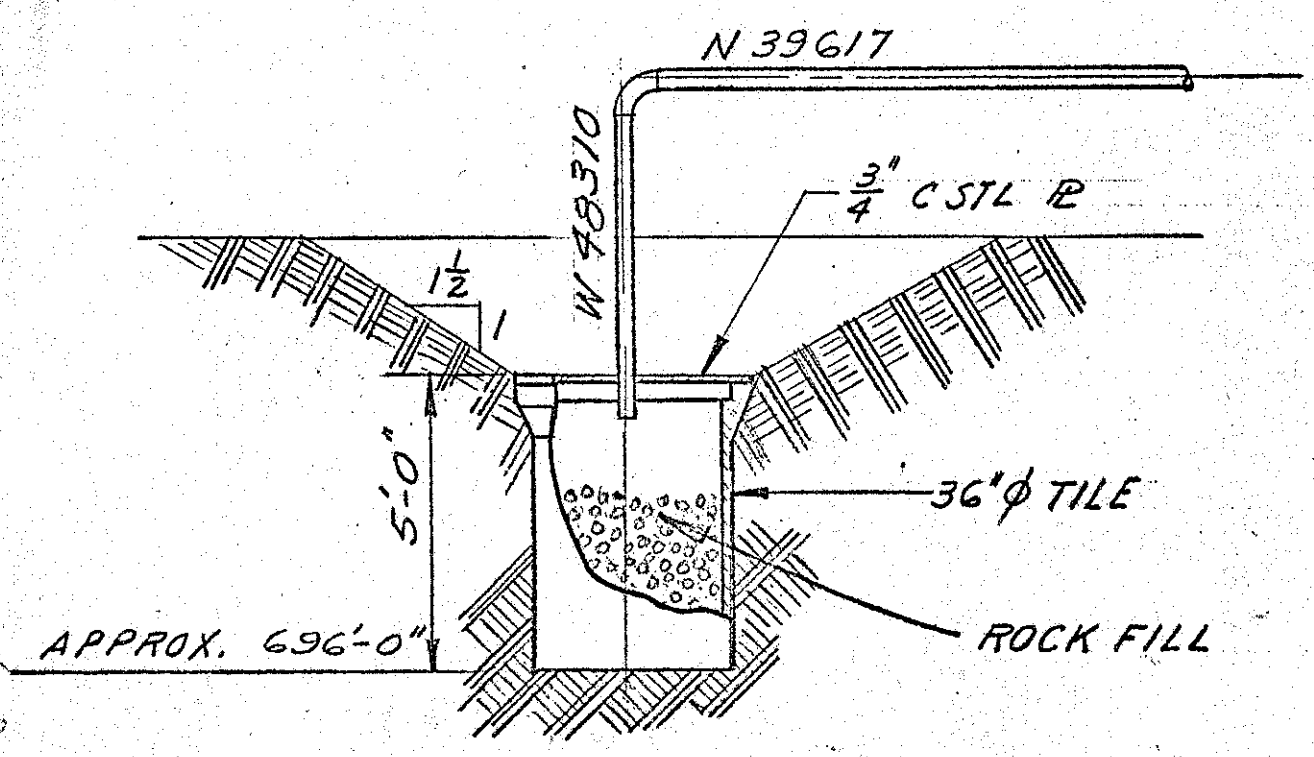


216-A-26B

HW 55176-PART 1
APPENDIX C-27
DRAWN JL SIMEK 12/18/59

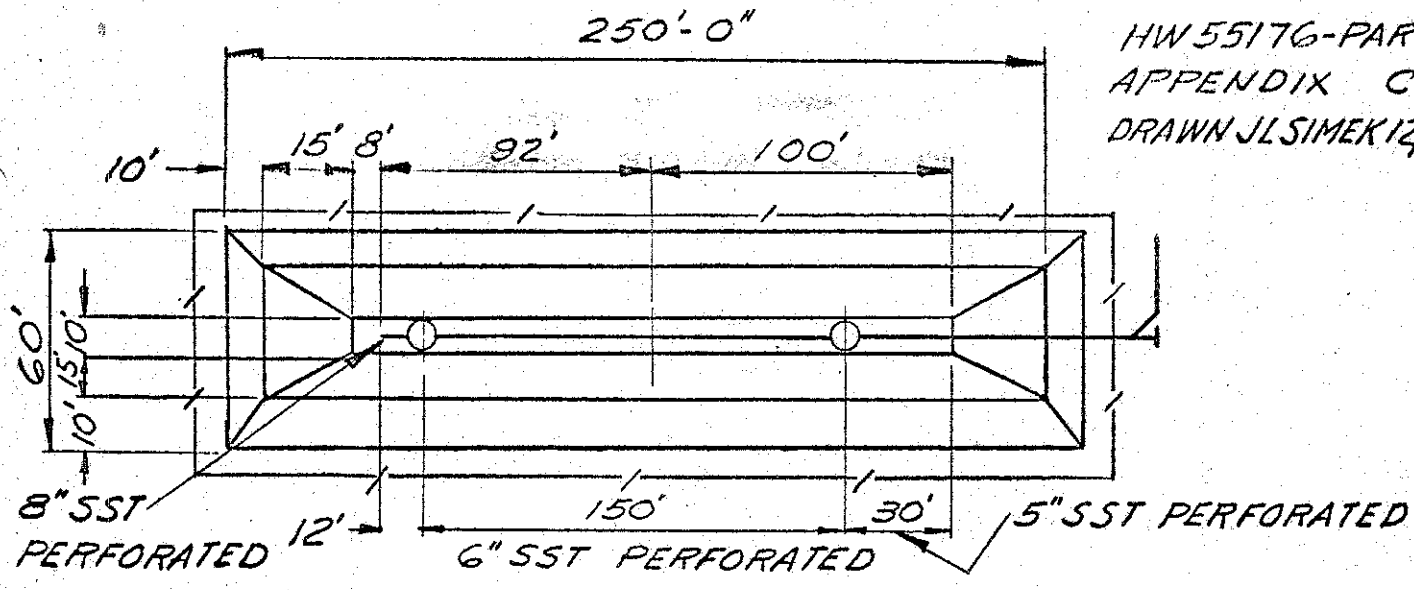


PLAN

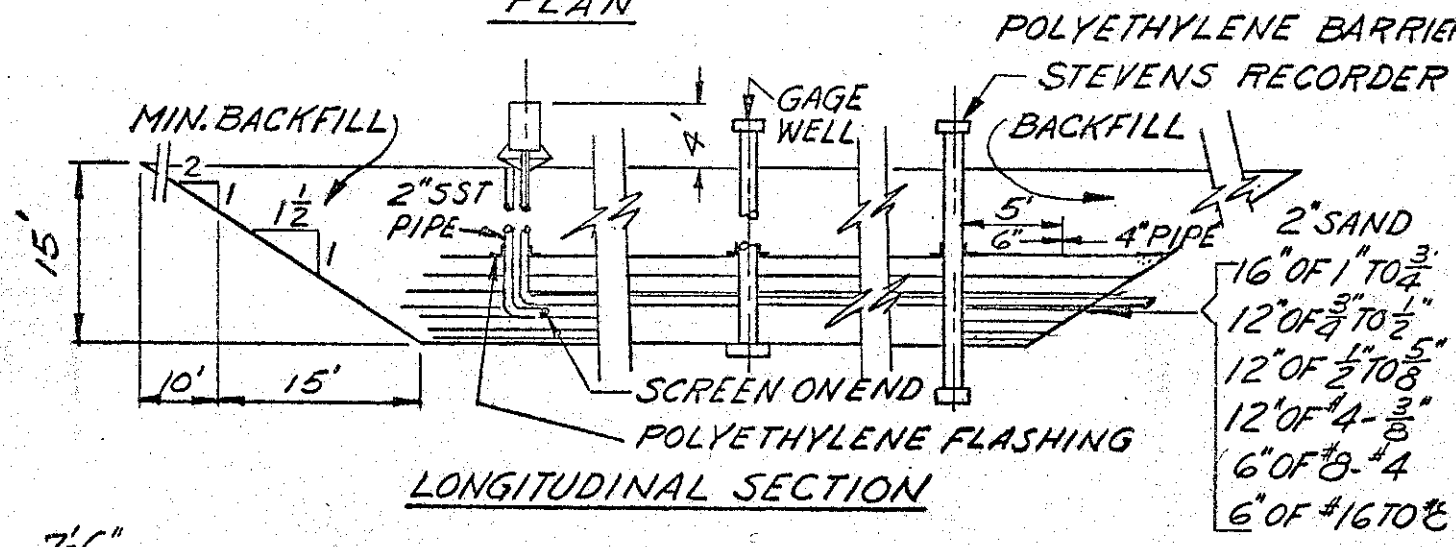


LONGITUDINAL SECTION

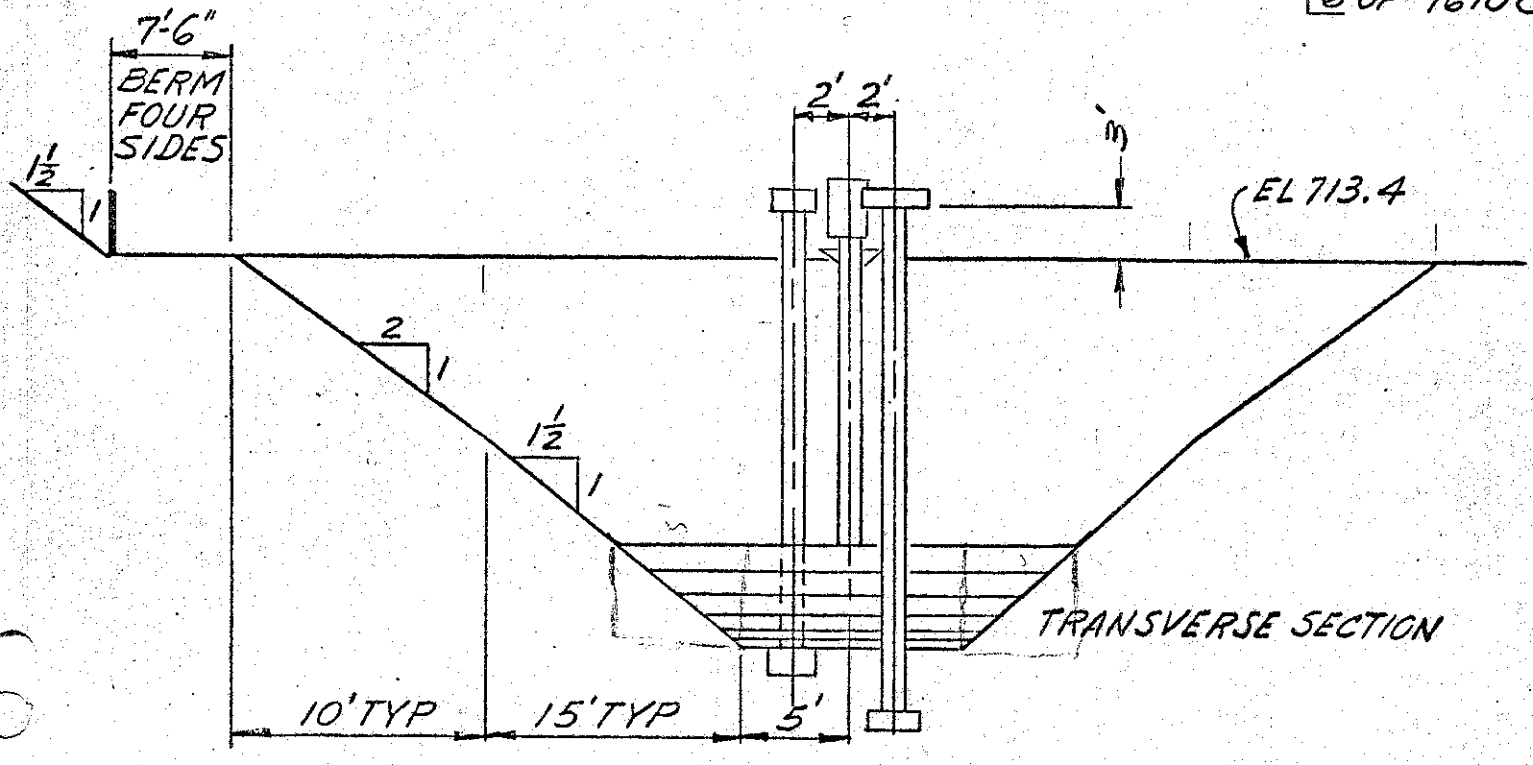


216-A-27
H-2-57509

HW 55176-PART I
APPENDIX C-28
DRAWN JLSimek 12/18/59

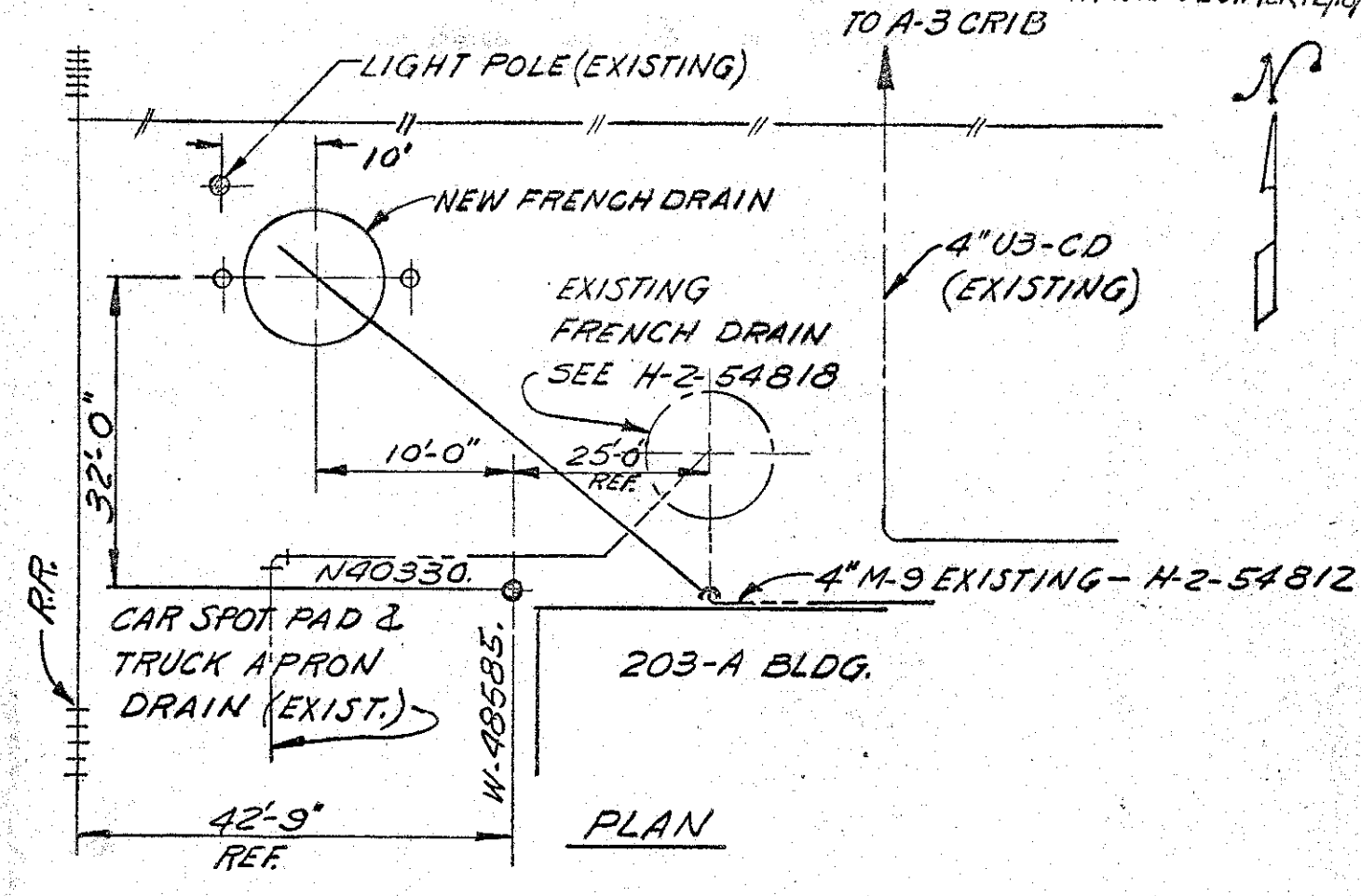


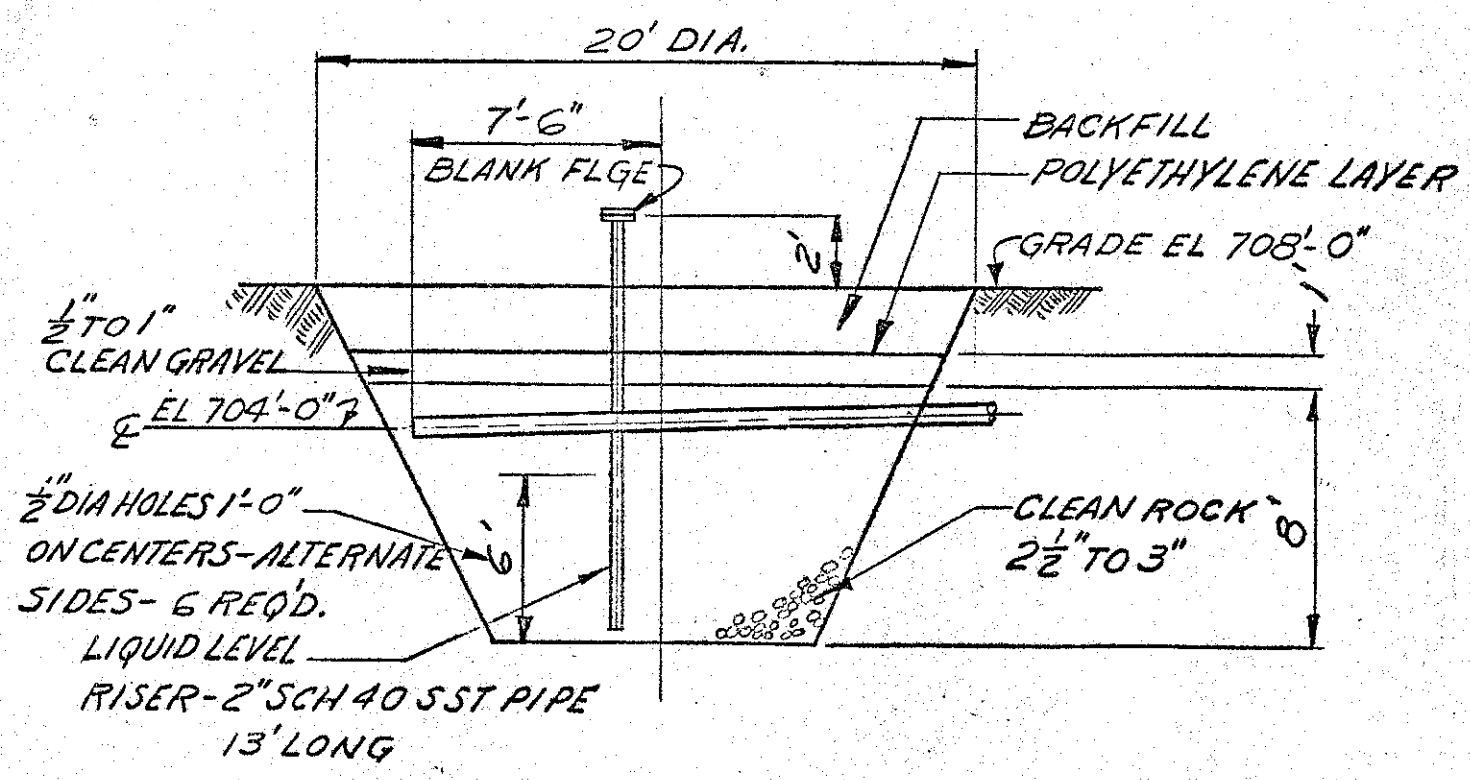


216-A-28
H-2-57617

29

HW-55176 PART "T"
APPENDEX C-29
DWN BY. J.E. SMITH 1-12-61

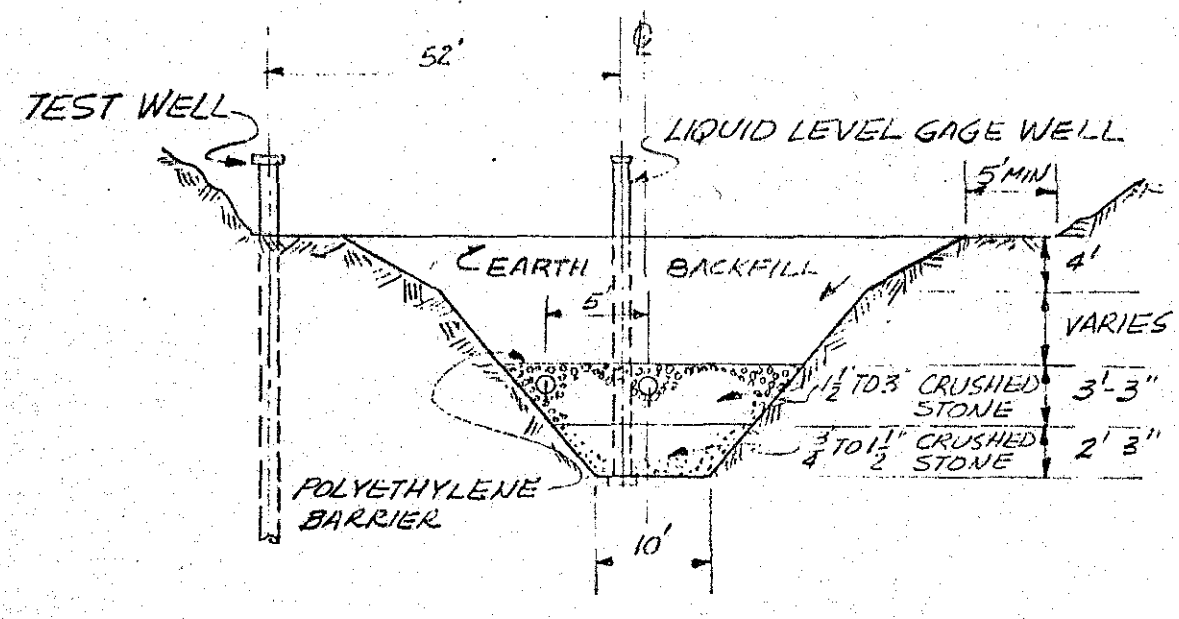


TYPICAL CRIB CROSS SECTION

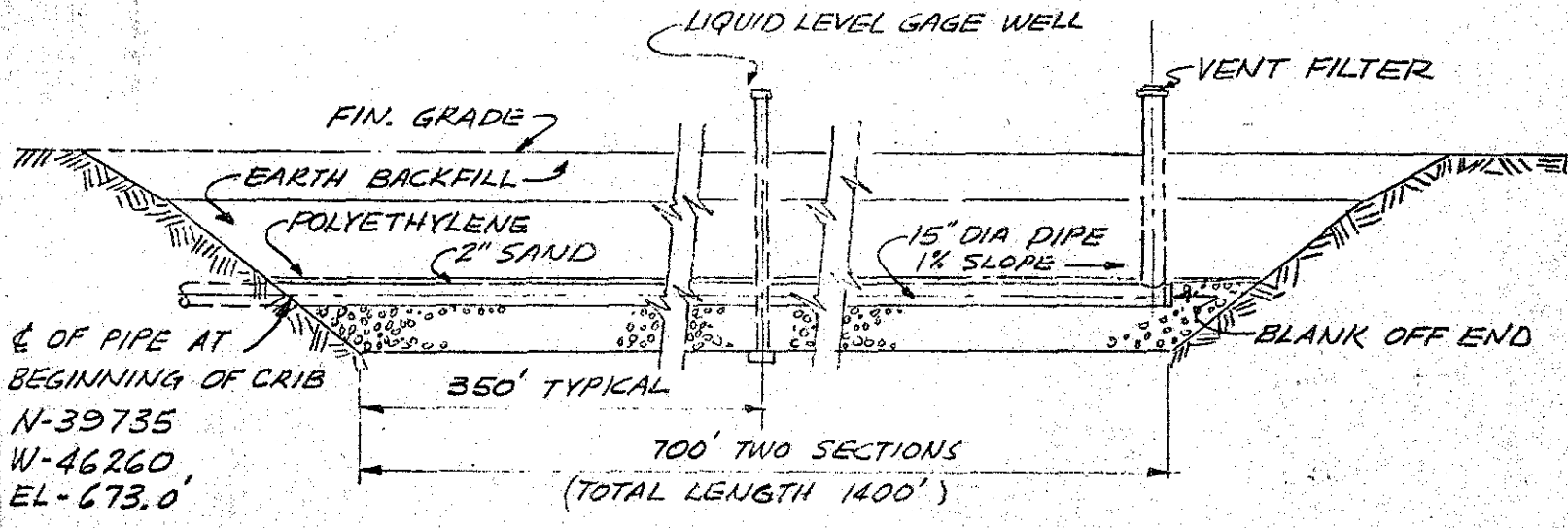


TYPICAL CRIB LONG SECTION

216-A-30

REF. — H-2-57720 & H-2-57719

HW-55176 PART 1
APPENDEX C-30
DWN BY: J.E.SMITH 1-11-61

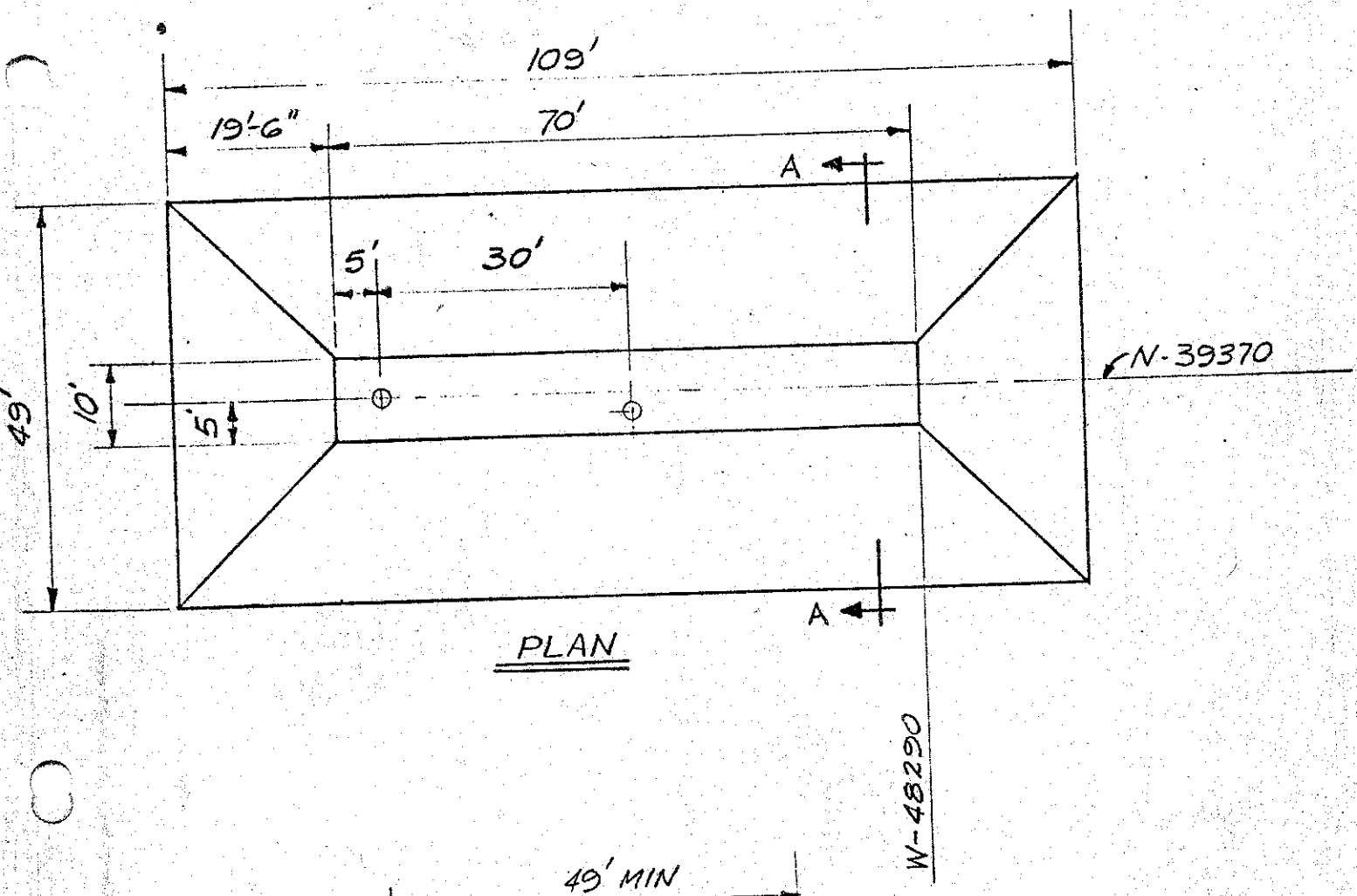


PLAN

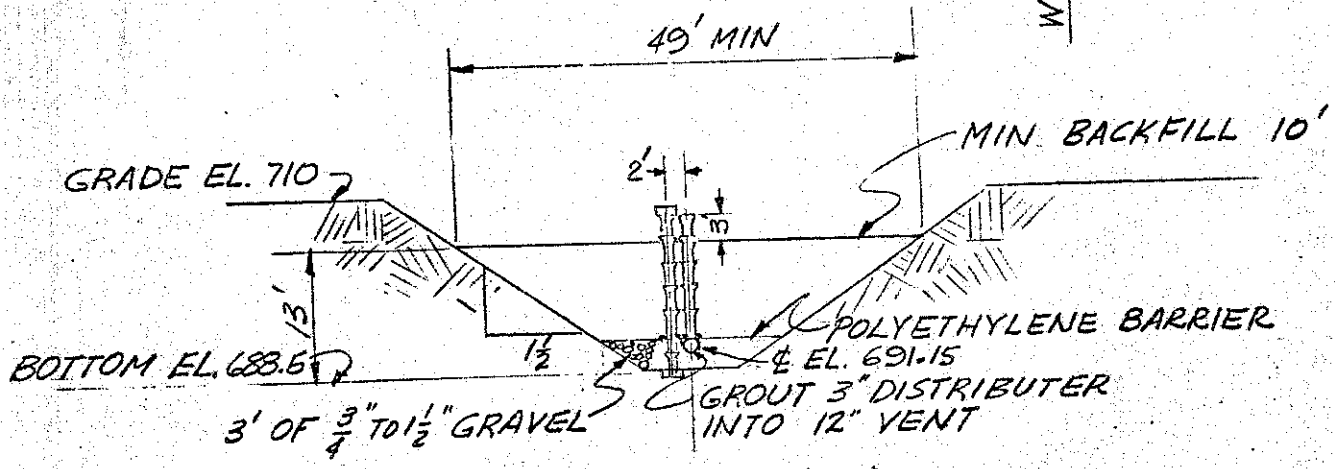


SECTION "AA"

216-A-31
TAKEN FROM SK-2-18602

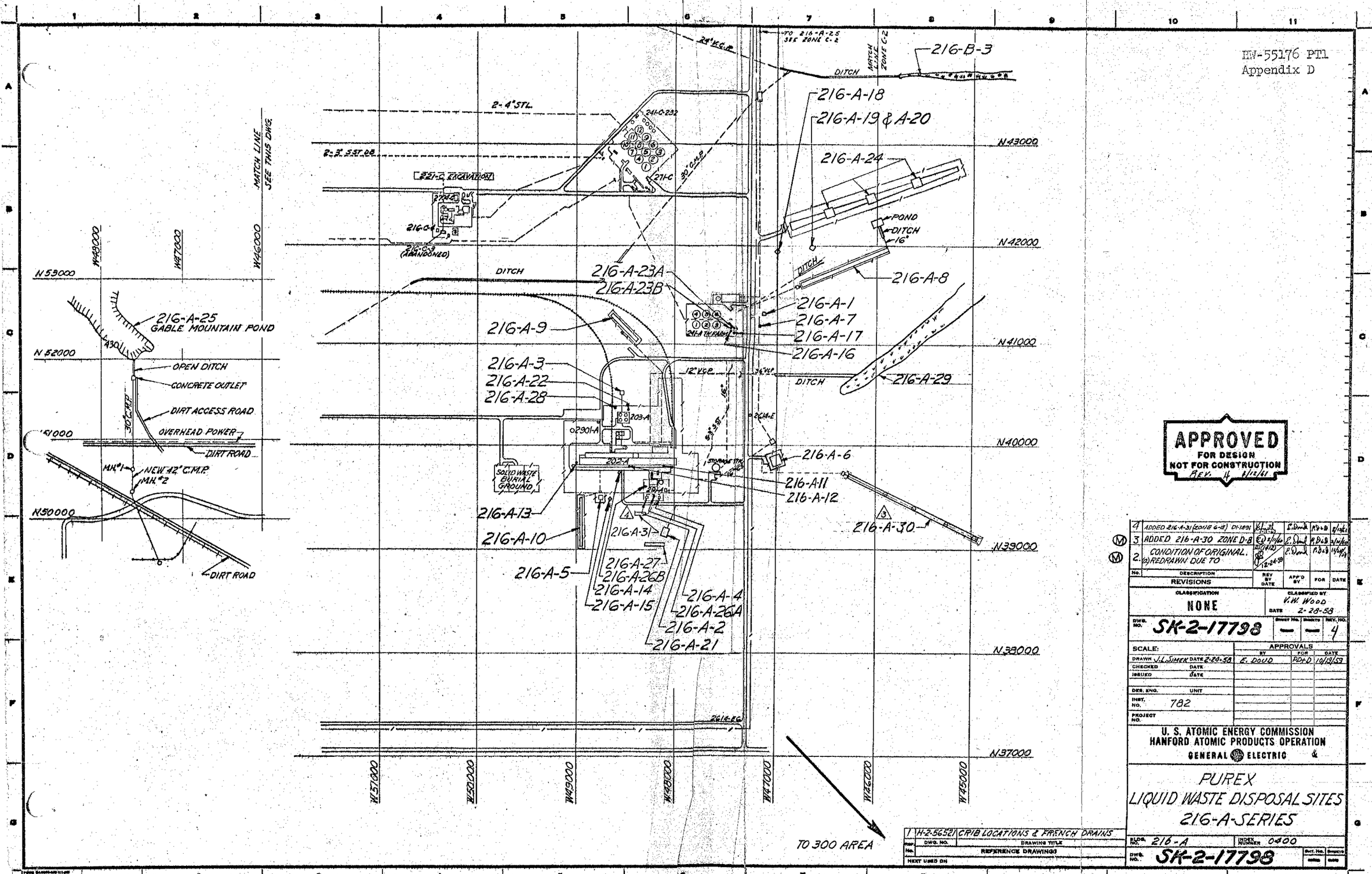


APPROVED
FOR DESIGN
NOT FOR CONSTRUCTION
REV. 4 2/12/61

| No. | DESCRIPTION | REV BY DATE | APP'D BY | FOR | DATE |
|---|---|---|---|---|---|
| 4 | ADDED 216-A-31 (ZONE G-12) DI-1891 | | E. Dowd | PD+D | 2/12/61 |
| 3 | ADDED 216-A-30 ZONE D-8 | | E. Dowd | PD+D | 2/12/61 |
| 2 | CONDITION OF ORIGINAL. (a) REDRAWN DUE TO | 12-24-59 | E. Dowd | PD+D | 12/24/59 |

REVISIONS

CLASSIFICATION: NONE

CLASSIFIED BY: V.W. Wood
DATE: 2-28-58

DWG. NO. SK-2-17798 | SHEET NO. — | SHEETS — | REV. NO. 4

SCALE:

| APPROVALS | BY | FOR | DATE |
|---|---|---|---|
| DRAWN J.L. Simer DATE 2-28-58 | E. Dowd | PD+D | 10/18/59 |
| CHECKED DATE | | | |
| ISSUED DATE | | | |
| DES. ENG. UNIT | | | |
| INST. NO. 782 | | | |
| PROJECT NO. | | | |

U. S. ATOMIC ENERGY COMMISSION
HANFORD ATOMIC PRODUCTS OPERATION
GENERAL ELECTRIC &

# PUREX
# LIQUID WASTE DISPOSAL SITES
# 216-A-SERIES

BLDG. NO. 216-A | INDEX NUMBER 0400

DWG. NO. SK-2-17798 | SHT. NO. | SHEETS | DATE

| REF. No. | DWG. NO. | DRAWING TITLE |
|---|---|---|
| 1 | H-2-56521 | CRIB LOCATIONS & FRENCH DRAINS |

REFERENCE DRAWINGS

NEXT USED ON

Z PLANT

UNCLASSIFIED
(CLASSIFICATION)

GENERAL ELECTRIC

HANFORD ATOMIC PRODUCTS OPERATION - RICHLAND, WASHINGTON

DOCUMENT NO.

HW-55176 - Pt. II

COPY NO.

TITLE

INDEX OF CPD CRIB BUILDING NUMBERS
DESIGNS OF CPD RADIOACTIVE LIQUID WASTE
DISPOSAL SITES

DATE

March 20, 1958

ISSUING FILE

AUTHOR

V. W. Wood

| ROUTE TO | PAYROLL NO. | LOCATION | FILES ROUTE DATE | SIGNATURE AND DATE |
|---|---|---|---|---|
| W A Haney | | ~~325~~ | | ~~W A Haney~~ 3/20/58 |
| | | | | |
| | | | | |
| | | | | |
| | | | | |
| | | | | |
| | | | | |
| | | | | |
| | | | | |
| | | | | |
| | | | | |
| | | | | |
| | | | | |
| | | | | |
| | | | | |

C-1899-MS (5 - 56)

UNCLASSIFIED
(CLASSIFICATION)

TO BE USED ON UNCLASSIFIED AND OFFICIAL USE ONLY DOCUMENTS

# INDEX OF CPD CRIB BUILDING NUMBERS DESIGNS OF CPD RADIOACTIVE LIQUID WASTE DISPOSAL SITES

Part II of VII Parts
Process Technology - Study Report

by

V. W. Wood
Radiological Design and Development
Facilities Engineering Operation
CHEMICAL PROCESSING DEPARTMENT

March 20, 1958

## D I S T R I B U T I O N

| | |
|---|---|
| CR Bergdahl | TG LaFollette |
| VM Bernard | CE Linderoth |
| A Bradway | WN Mobley |
| WG Browne | HE Parker |
| E Doud | HF Peterson |
| J Durbin | DW Pearce |
| JB Fecht | OH Pilkey |
| DR Gustavson | EL Reed |
| WA Haney | RA Roberts |
| JF Honstead | HP Shaw |
| IM Jacques | W Tressler |
| EB Jackson | VW Wood |
| CE Kent | 300 Files |

# INDEX OF CPD CRIB BUILDING NUMBERS
# DESIGNS OF CPD RADIOACTIVE LIQUID WASTE DISPOSAL SITES

## Part II of VII Parts
## Process Technology - Study Report

## INTRODUCTION

During the fourteen years or more which the separations areas have operated, many sites have been used for the disposal of radioactive liquid wastes. Various methods have been used in assigning building numbers to these sites and, in a number of cases, changes have been made which have brought about some confusion. One of the reasons being some currently used building numbers do not agree with the numbers existing on design prints for the facilities. Reference (2) was an effort to establish a listing of the liquid waste disposal sites. It required considerable time and research to locate information concerning these sites.

Many varied designs have been used for the disposal of radioactive liquid wastes. Reverse wells, trenches, cribs or caverns, etc, have been used. Specific information on these facilities is often difficult to obtain for in some instances they were constructed on work orders with no recorders being retained on the design. In general, the design on each facility has been different. This has made it extremely difficult for people to have a good working knowledge of the various waste disposal sites.

## PURPOSE

The purpose of this report (Part II) is to provide a ready reference to the "Z" Plant liquid waste disposal sites as well as a compilation of sketches showing the basic information on the design of each facility.

Another objective is to establish a simplified and uniform numbering system. Still another objective is to provide an up-to-date tabulation. Subsequent parts of this report will provide information on cribs for such plants as Redox and "T" Plant.

## SUMMARY AND CONCLUSIONS

All radioactive liquid waste disposal sites should have the 216 Building number designation. These should be further grouped by giving all such sites for Purex a prefix of 216-A. Other major series would be 216-S for Redox; 216-T for "T" Plant; 216-B for "B" Plant; 216-U for "U" Plant and 216-Z for "Z" Plant.

The numbering list in "Official Hanford Works Building List - Specification HW-5000" by Engineering Files - Construction Engineering Operation should be revised to more closely follow the above numbering system.

RECOMMENDATIONS

It is recommended that the following action be taken:

1. All groups and services referring to the "Z" Plant cribs or report data concerning them should use the index numbering system as presented in this report. In the case of "Z" Plant this means a few changes. See cross reference, page 4.

2. That all drawings concerning these disposal sites, including maps, be revised to show the proper locations and numbers for these cribs.

3. Any suggestions for improving the usefulness of this report should be referred to the author.

DISCUSSION

When all seven parts of the report are completed, and the work outlined in the report is completed, much confusion will be eliminated and more people will be better informed on the design of each waste disposal facility. The report will provide a firm basis for future building number assignments.

While some sincere efforts have been made to try and keep a methodical system for recording waste disposal sites, a number of problems have developed - for example, HW-5000, Sheet 29 of 50 lists, only two cribs in the 216-Z series. They are 216-Z-8 and 216-Z-9. Although no coordinates are given, it is doubtful if these refer to the same cribs with the same number as given in Reference "2".

As indicated earlier, the use of the crib index, as presented in this report should be very easy. In addition, information is presented which is very difficult to locate in the records and in some cases it is not available in the records.

REFERENCES

1. HW-5000, "Official Hanford Works Building List - Specification HW-5000" by Engineering Files - Construction Engineering Operation.

2. HW-43121, "Tabulation of Radioactive Liquid Waste Disposal Facilities" by HV Clukey dated May 10, 1956.

3. HW-33305, "Tabulation of Radioactive Liquid Waste Disposal Facilities," by HV Clukey dated October 8, 1954.

## CROSS REFERENCE

## "Z" PLANT RADIOACTIVE LIQUID WASTE DISPOSAL SITES

| Suggested Crib No. | Number Listed in HW-5000 | Number Listed in HW-43121 | Number Used On Drawings or Original Number | Remarks |
|---|---|---|---|---|
| 216-Z-1 | 234-5-1 | 216-Z-7 | 234-5-1 | |
| 216-Z-2 | 234-5-2 | 216-Z-7 | 234-5-2 | |
| 216-Z-3 | 234-5-3 & 4 | 216-Z-8 | 234-5-3 & 4 | |
| 216-Z-4 | 231-1 | 216-Z-3 | 216-Z-3 | 231-W-3 |
| 216-Z-5 A,B | 231-2 | 216-Z-5 | 231-W-1 & 2 | 231-W-1 & 2 |
| 216-Z-6 | None | 216-Z-4 | 216-Z-6 | 231-W-4 |
| 216-Z-7 | None | 216-Z-6 | 216-Z-7 | 231-W Trench |
| 216-Z-8 | 216-Z-8 | 216-Z-9 | 216-Z-8 | Recuplex |
| 216-Z-9 | 216-Z-9 | 216-Z-10 | 216-Z-9 | Recuplex |
| 216-Z-10 | None | 216-Z-2 | None | 231-W-150 Reverse Well |
| 216-Z-11 | None | 216-Z-1 | None | Drainage Ditch to U Swamp |
| 216-Z-12 | None | None | 216-Z-12 | New Crib |

APPENDIX

A. Explanation of Parts to the Report

Part I will cover the Purex Radioactive Liquid Waste Disposal Sites.

Part II will cover the "Z" Plant Radioactive Liquid Waste Disposal Sites.

Part III will cover the Redox Plant Radioactive Liquid Waste Disposal Sites.

Part IV will cover the "U" Plant Radioactive Liquid Waste Disposal Sites.

Part V will cover the "T" Plant Radioactive Liquid Waste Disposal Sites.

Part VI will cover the "B" Plant Radioactive Liquid Waste Disposal Sites.

Part VII will cover the "C" Plant, Hot Semi-Works, the 200 North Areas and miscellaneous.

B. Index for Z Plant Radioactive Liquid Waste Disposal Sites.

C. Sketches of Z Plant Waste Disposal Facilities.

D. Map of Z Plant Sites. (SK-2-17807).

## CRIB INDEX

### Z Plant

| Number | Description Appendix Sheet- | Service | Use Date From | Use Date To | Status |
|---|---|---|---|---|---|
| 216-Z-1 | C-1 | D-6 Wastes | 6/49 | 6/52 | Replaced by Z-3 |
| 216-Z-1A | C-2 | Overflow from Z-1, 2 & 3 | 6/49 | 3/59 | Replaced by Z-12 |
| 216-Z-2 | C-1 | D-6 Wastes | 6/49 | 6/52 | Replaced by Z-3 |
| 216-Z-3 | C-3 & 4 | D-6 Wastes | 6/52 | 3/59 | Replaced by Z-12 |
| 216-Z-4 | C-5 | 231-Z Lab Wastes | 6/45 | | Abandoned |
| 216-Z-5 | C-6 | 231-Z Proc. Wastes | 6/45 | 2/47 | Replaced by Z-7 |
| 216-Z-6 | C-7 & 8 | 231-Z Proc. Wastes | 6/45 | | Abandoned |
| 216-Z-6A | C-7 | 231-Z Proc. Wastes | 6/45 | | Abandoned |
| 216-Z-7 | C-9 & 10 | 231-Z Lab Wastes | 2/47 | - | Active |
| 216-Z-8 | C-11 & 12 | Silica Tk Overflow | 7/55 | - | Active |
| 216-Z-9 | C-11 & 13 | Recuplex CAU Waste | 7/55 | - | Active |
| 216-Z-10 | C-14 & 15 | 231-Z Wastes | 2/45 | 6/45 | Replaced by Z-5 |
| 216-Z-11 | C-16 | Cooling Water | 6/49 | - | Active |
| 216-Z-12 | C-17 & 18 | D-6 Wastes | 3/59 | - | Active |
| 216-Z-13 | C-19 | 234-5 Tunnel Drain | 6/49 | - | Active |
| 216-Z-14 | C-19 | Evapor. Cond. Wtr. | 6/49 | - | Active |
| 216-Z-15 | C-19 | Evapor. Cond. Wtr. | 6/49 | - | Active |

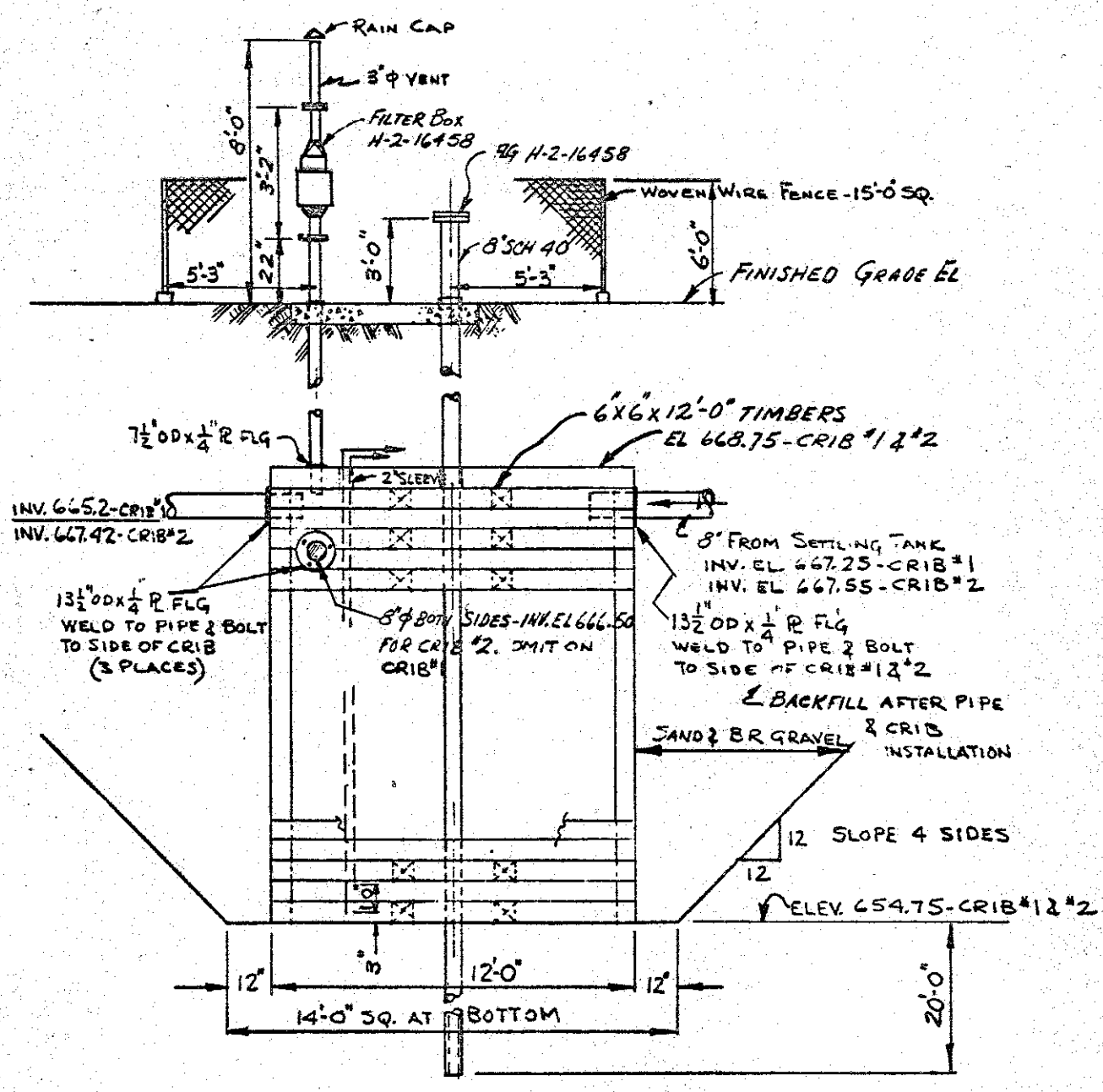


*CRIB #1 - AS SHOWN
CRIB #2 - AS SHOWN & NOTED

TAKEN FROM H-2-16459

216-Z-1*
216-Z-2

HW-55176-PT2
APPENDIX C-2

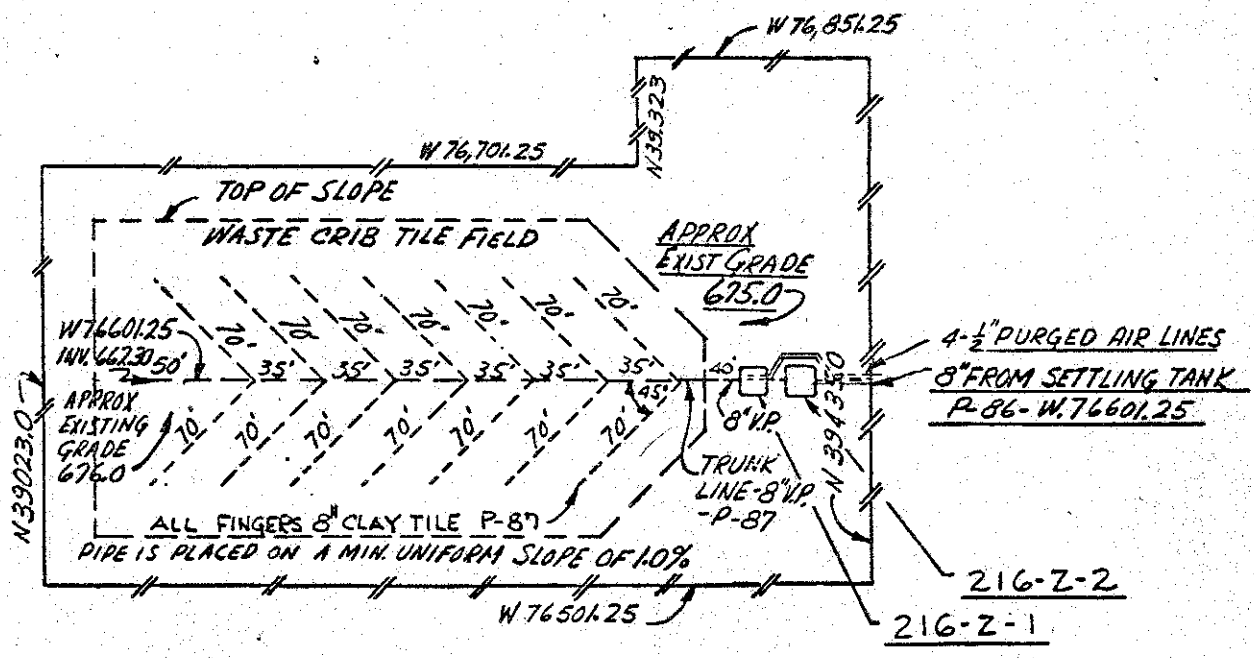


PLAN

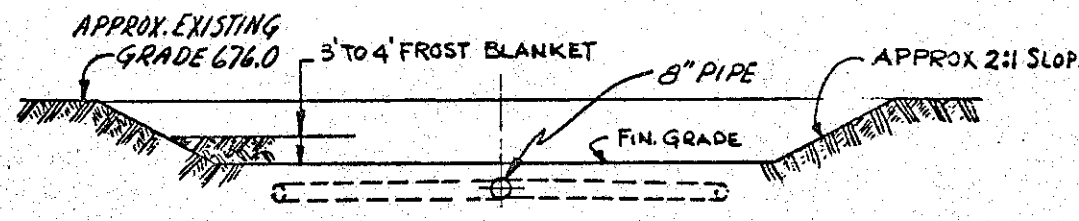


SECTION

216-Z-1A
TILE FIELD

HW-55176-PT2
APPENDIX C-3

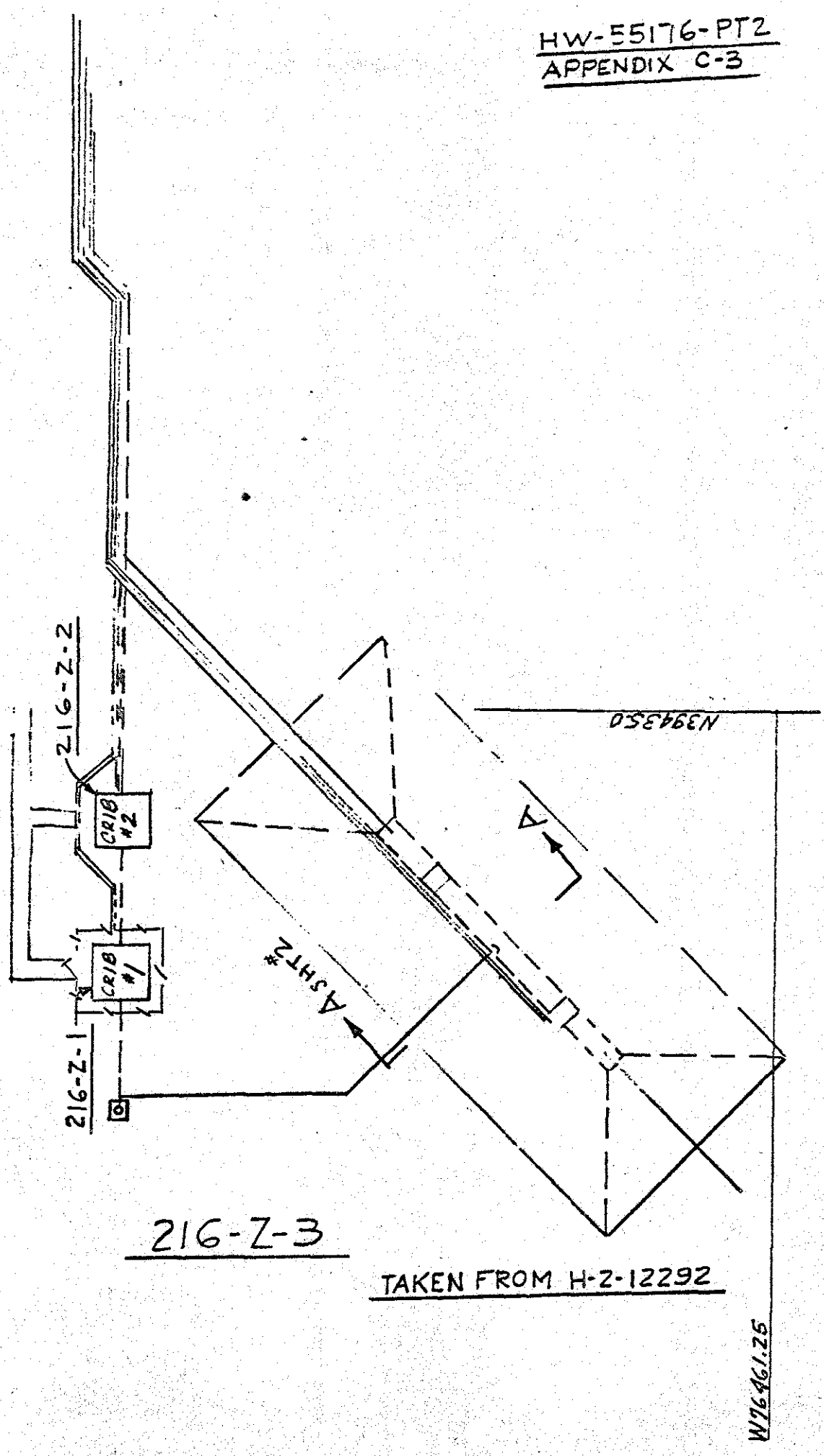


216-Z-3

TAKEN FROM H-2-12292

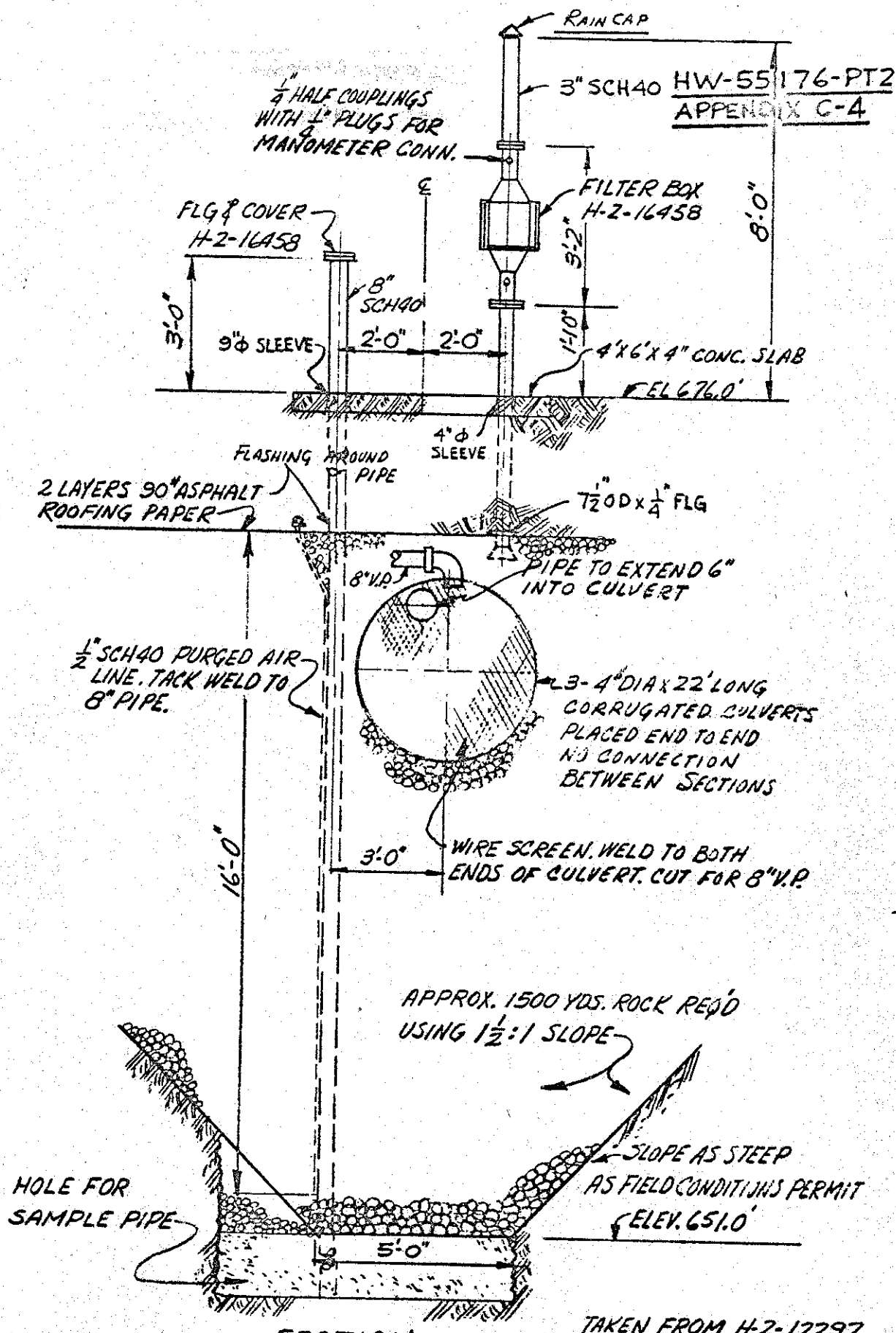


TAKEN FROM H-2-12292

SECTION A-A

216-Z-3

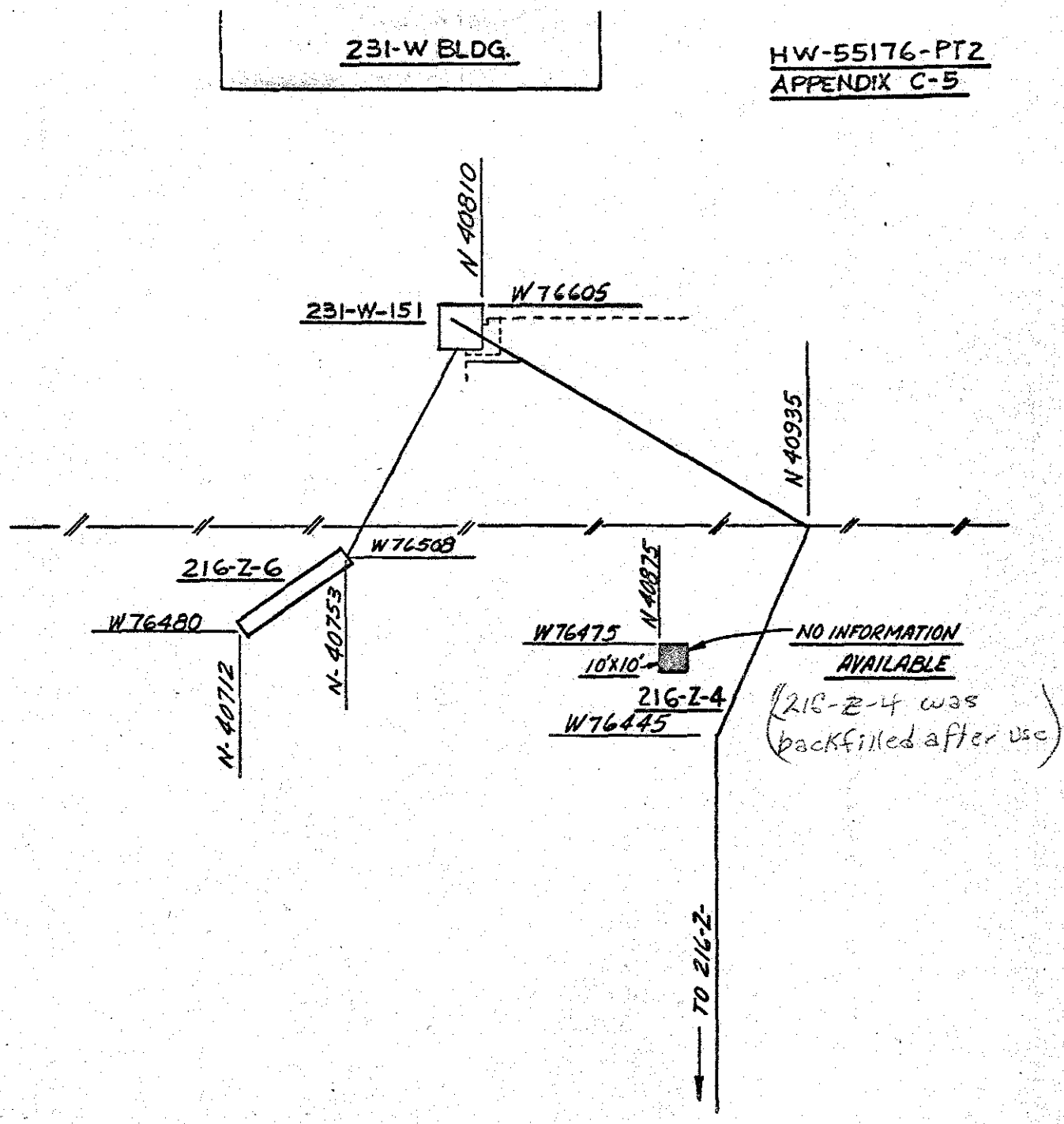


TAKEN FROM H-2-511
DOC. #43121

216-Z-4

HW 55176-PART 2
APPENDIX C-6
DRAWN J.L.SIMEK 12/18/59

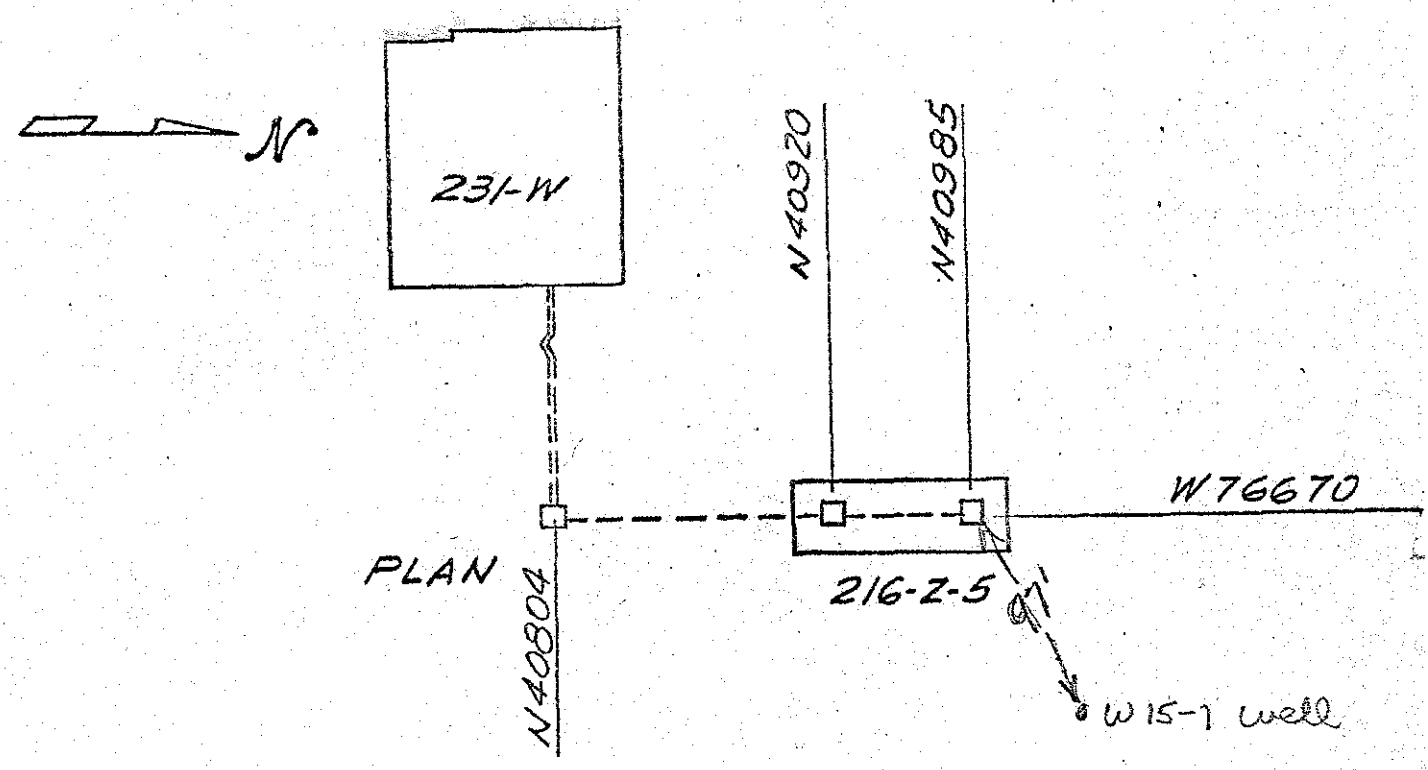


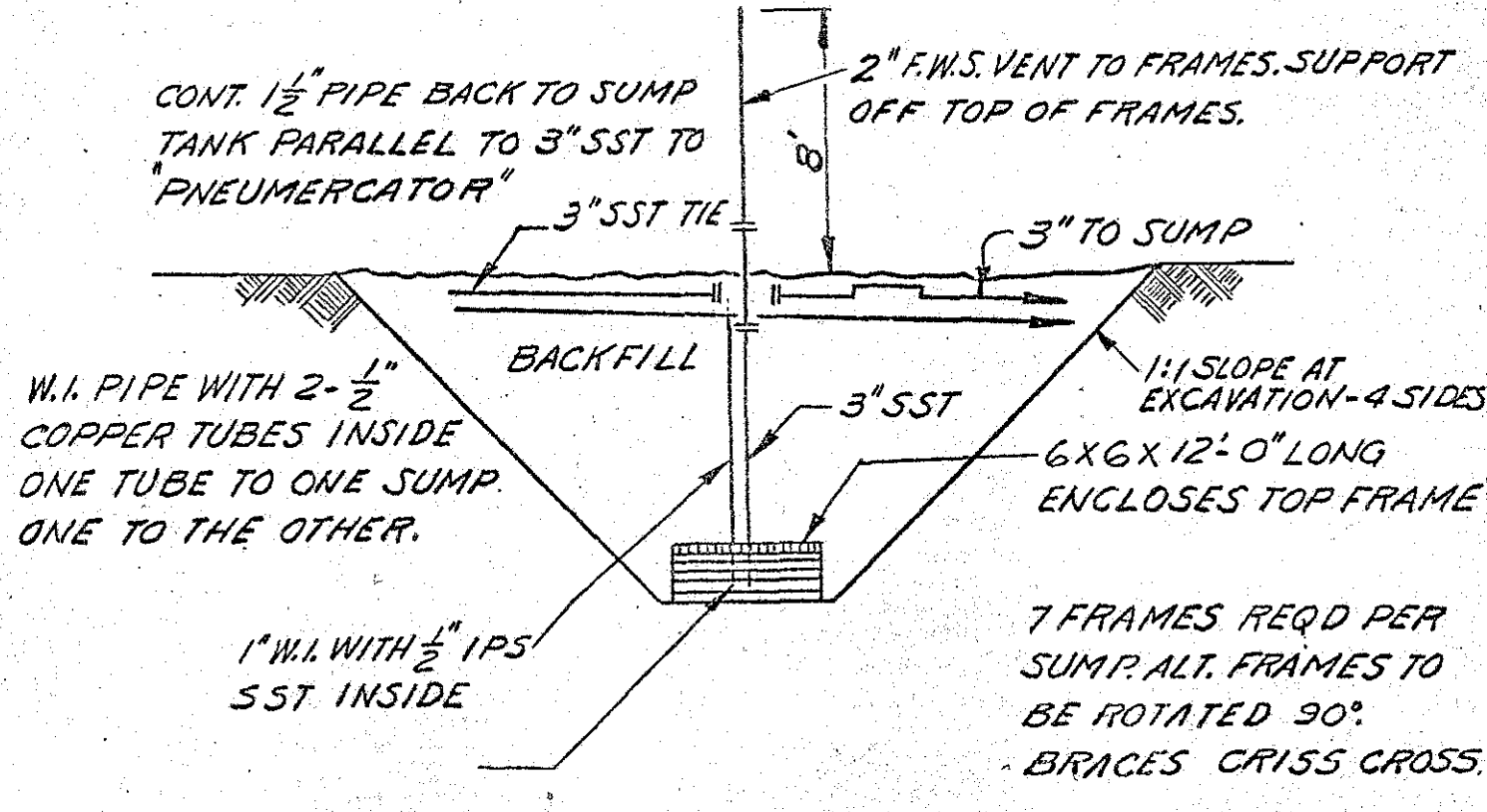


216-Z-5

HW 55176-PART 2
APPENDIX C-7
DRAWN JLSIMEK 12/18/59

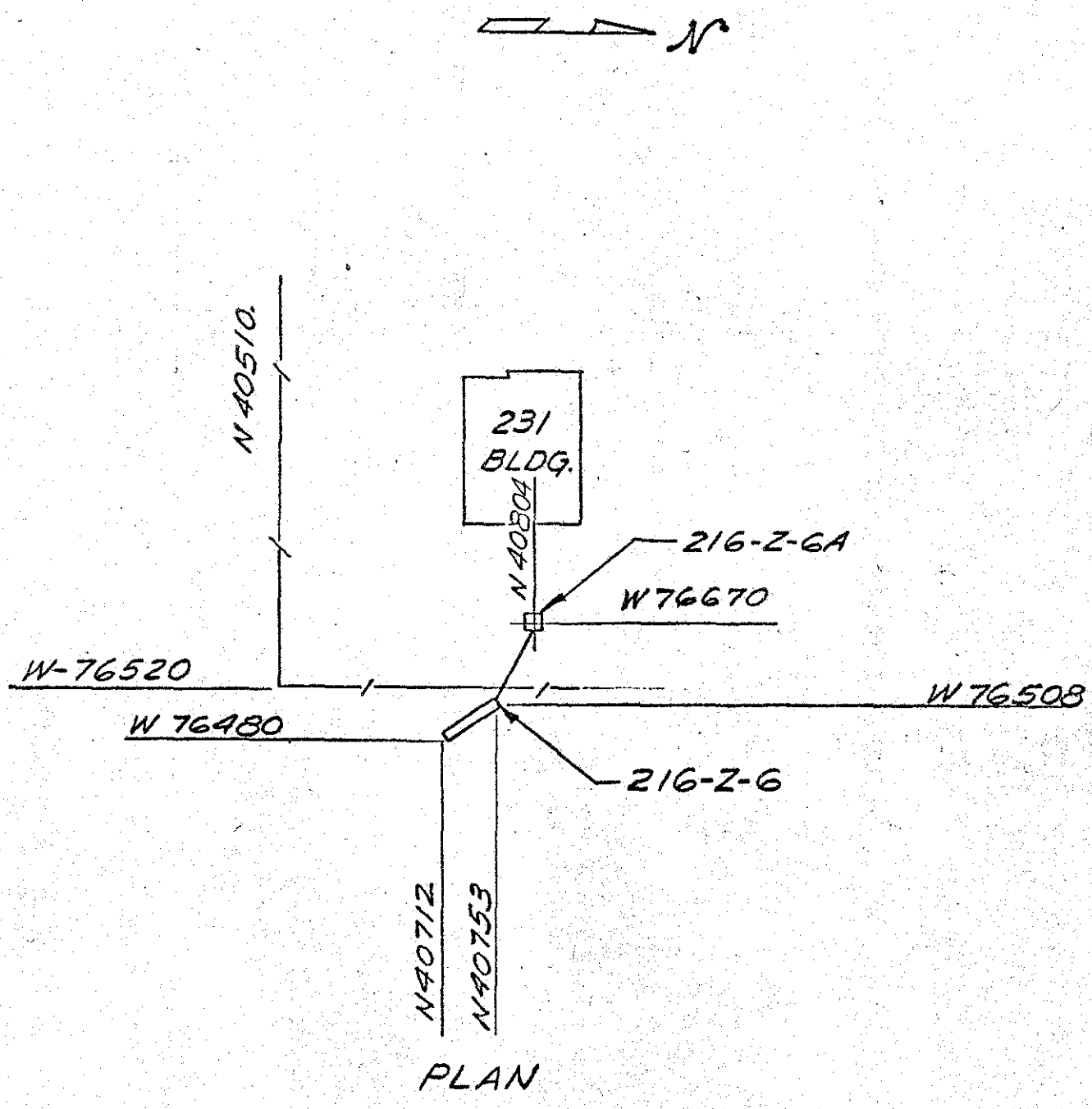


PLAN

231-Z-6
231-Z-6A
H-2-508

HW-55176-PT2
APPENDIX C-8

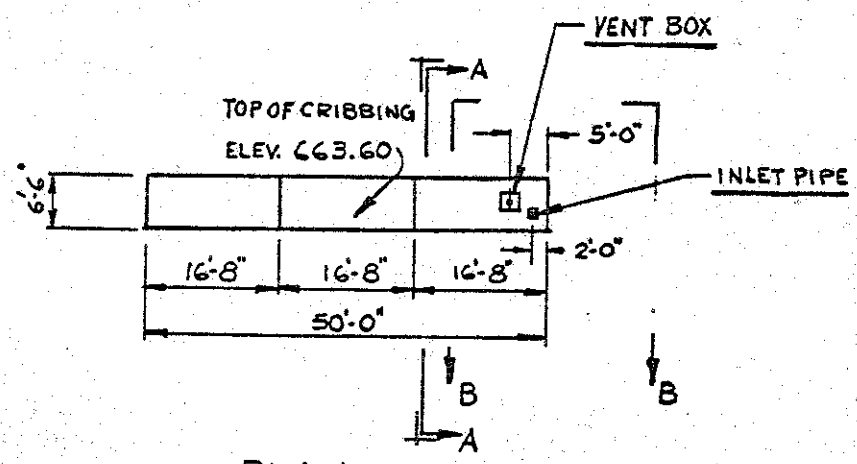


PLAN
TRENCH CRIBBING

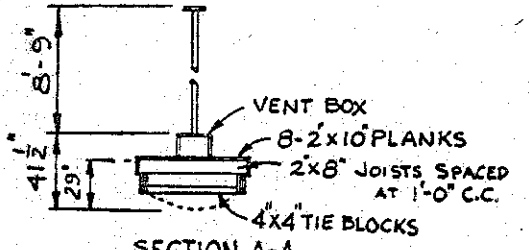


SECTION A-A

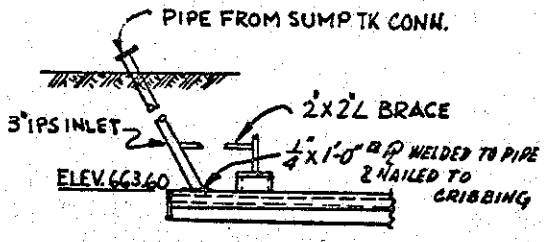


SECTION B-B

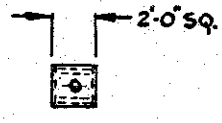


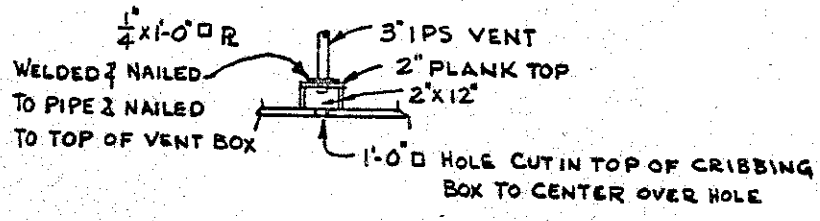


DETAILS

TAKEN FROM H-2-508

216-Z-6

HW-55176-PT2
APPENDIX C-9

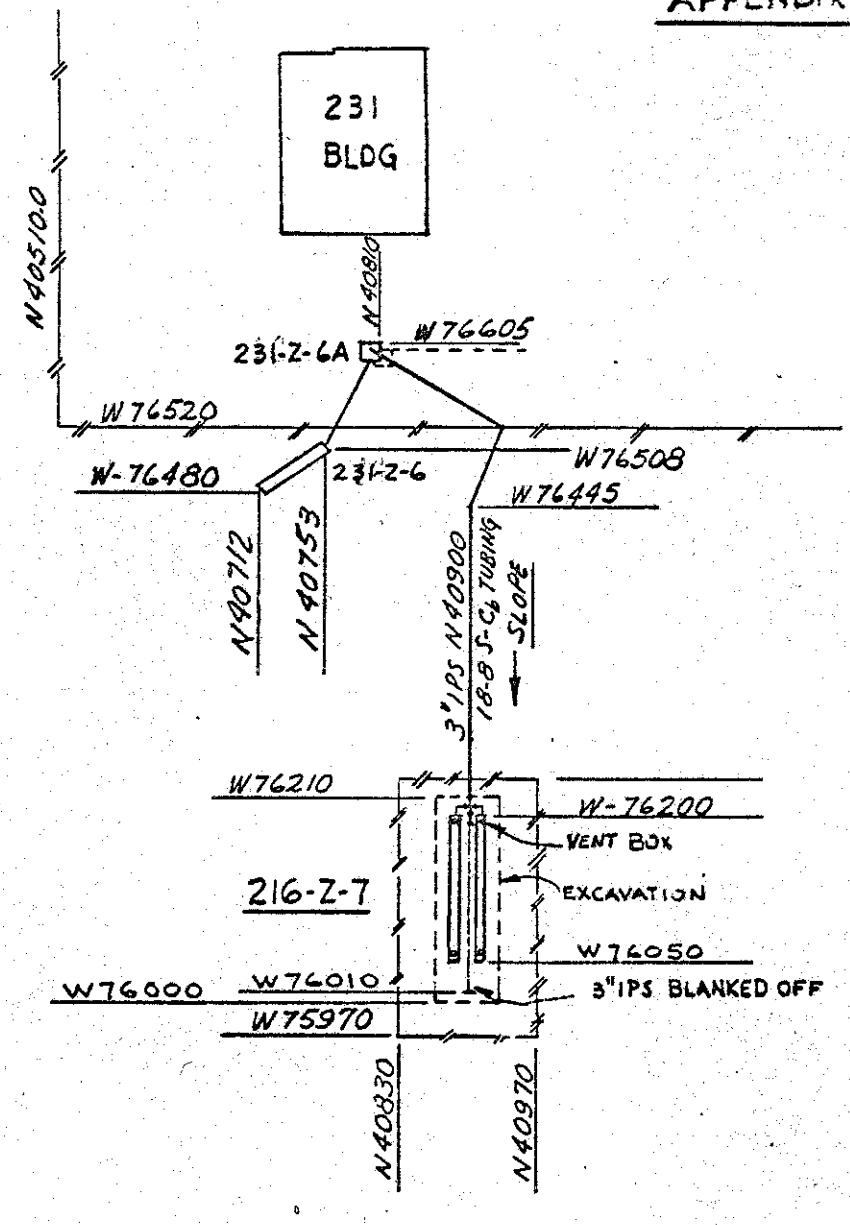


PERMANENT DISPOSAL TRENCH

216-Z-7

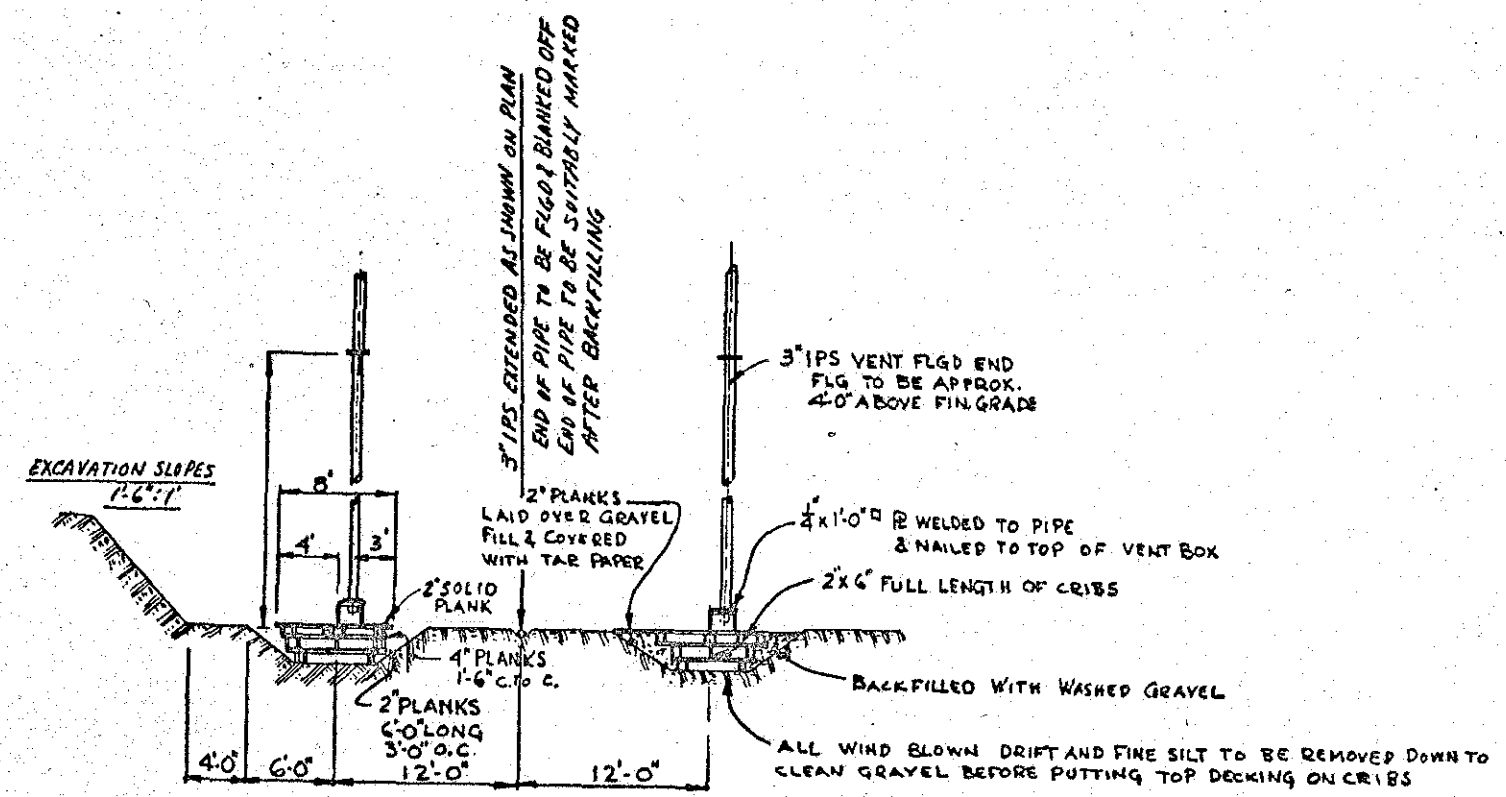


TRENCH CRIBS IDENTICAL

SECTION A-A

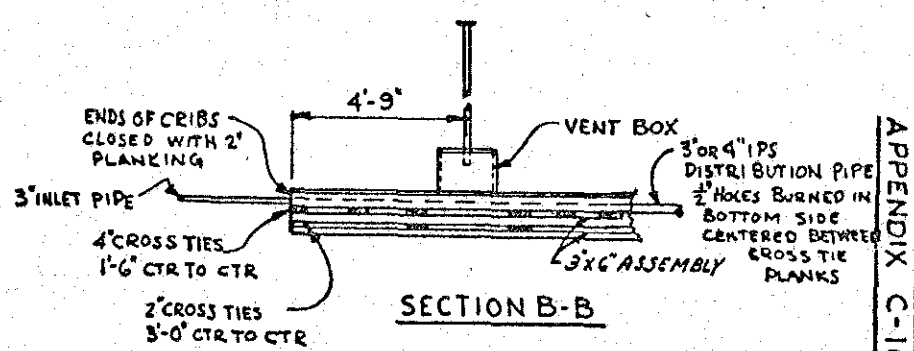


SECTION B-B

TAKEN FROM H-2-511

216-Z-7

HW-55176-PT2
APPENDIX C-10

16

HW 55176-PART 2
APPENDIX C-11
DRAWN JLSIMEK 12/17/59

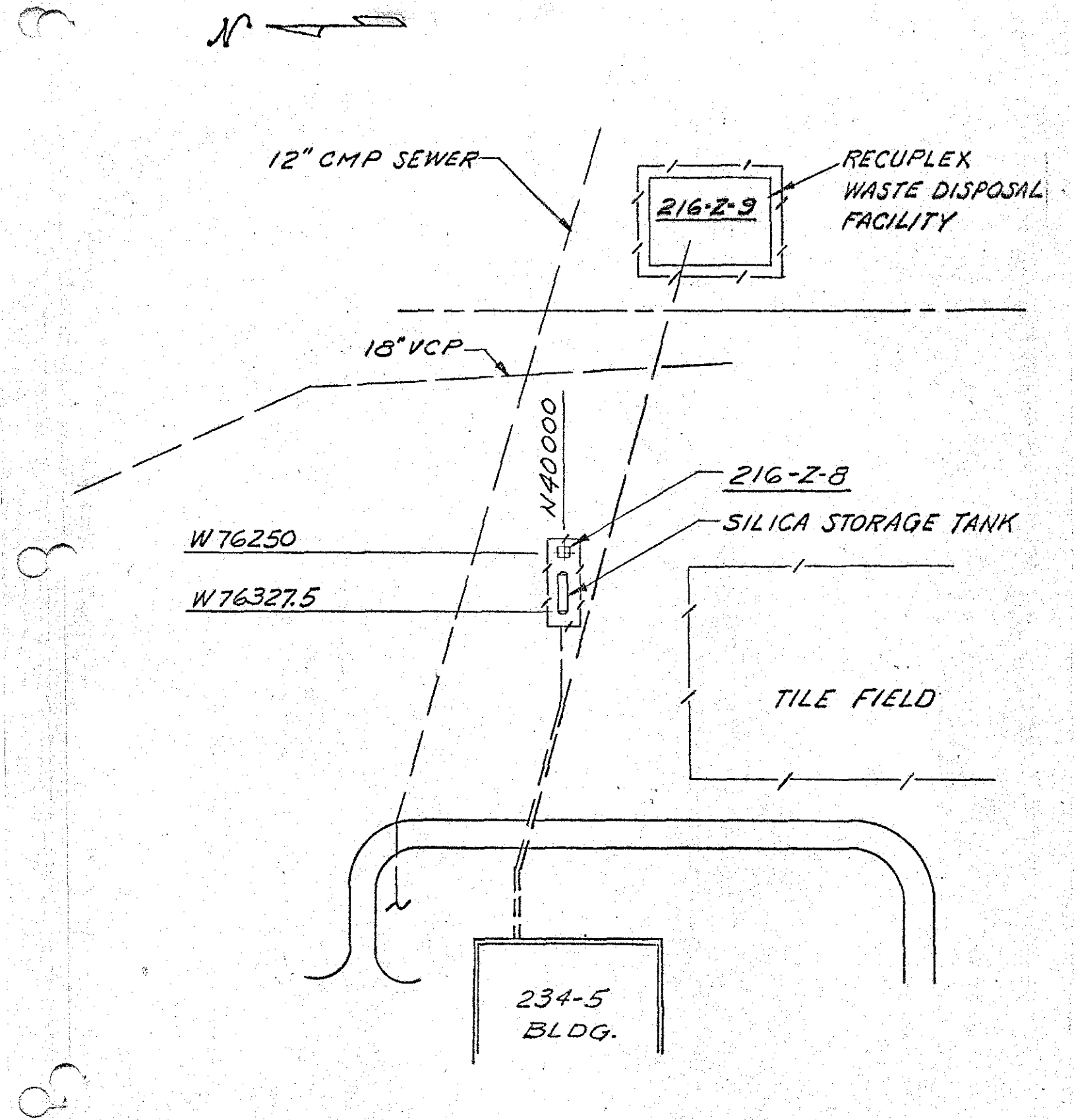


216-Z-8
216-Z-9
H-2-16653

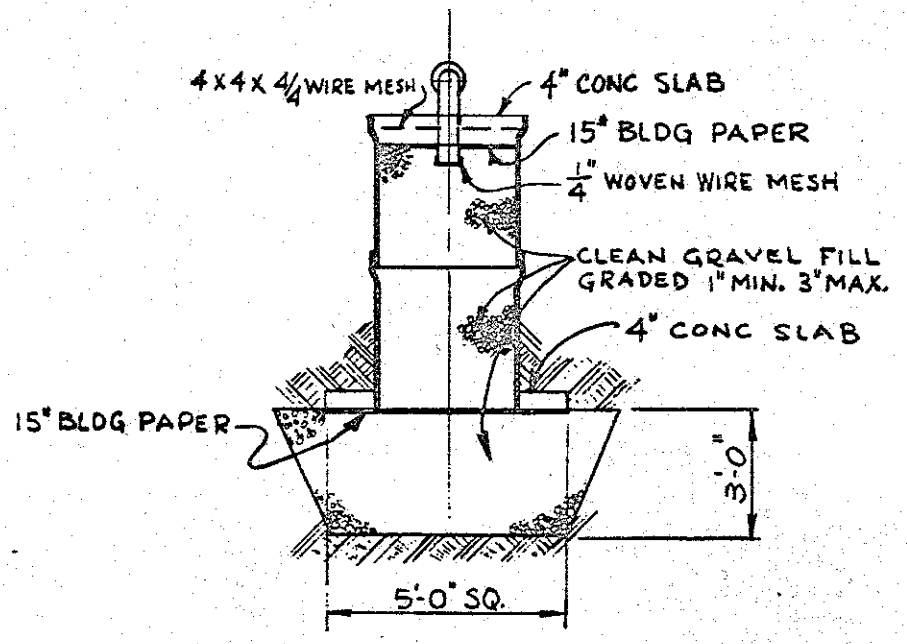


SECTION

TAKEN FROM H-2-16653

216-Z-8

N 39920

HW-55176-PT2

APPENDIX C-13

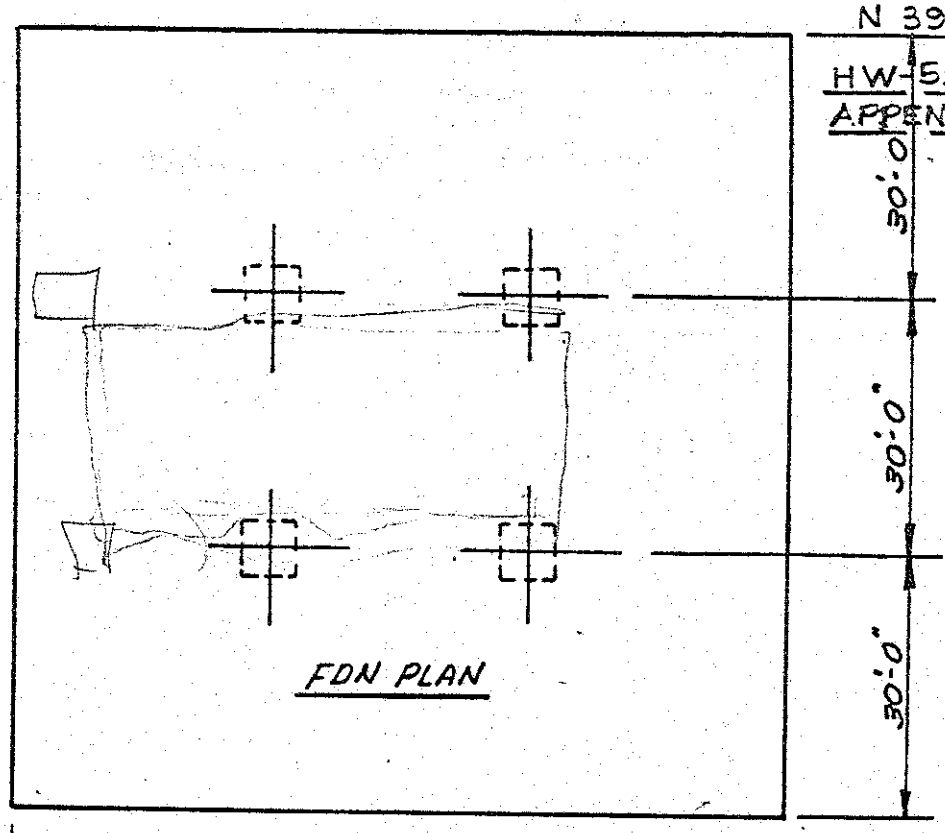


W 75955

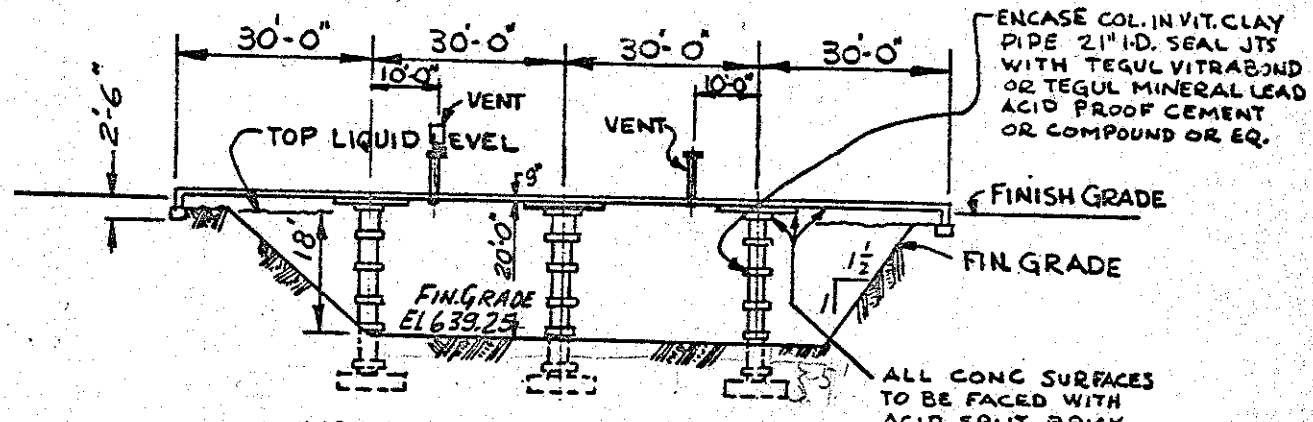


LIQUID CAP. 765,000 GALS.

WHEN FILLED TOP LIQUID LEVEL

TAKEN FROM H-2-15492

H-2-15491

216-~~7~~-9

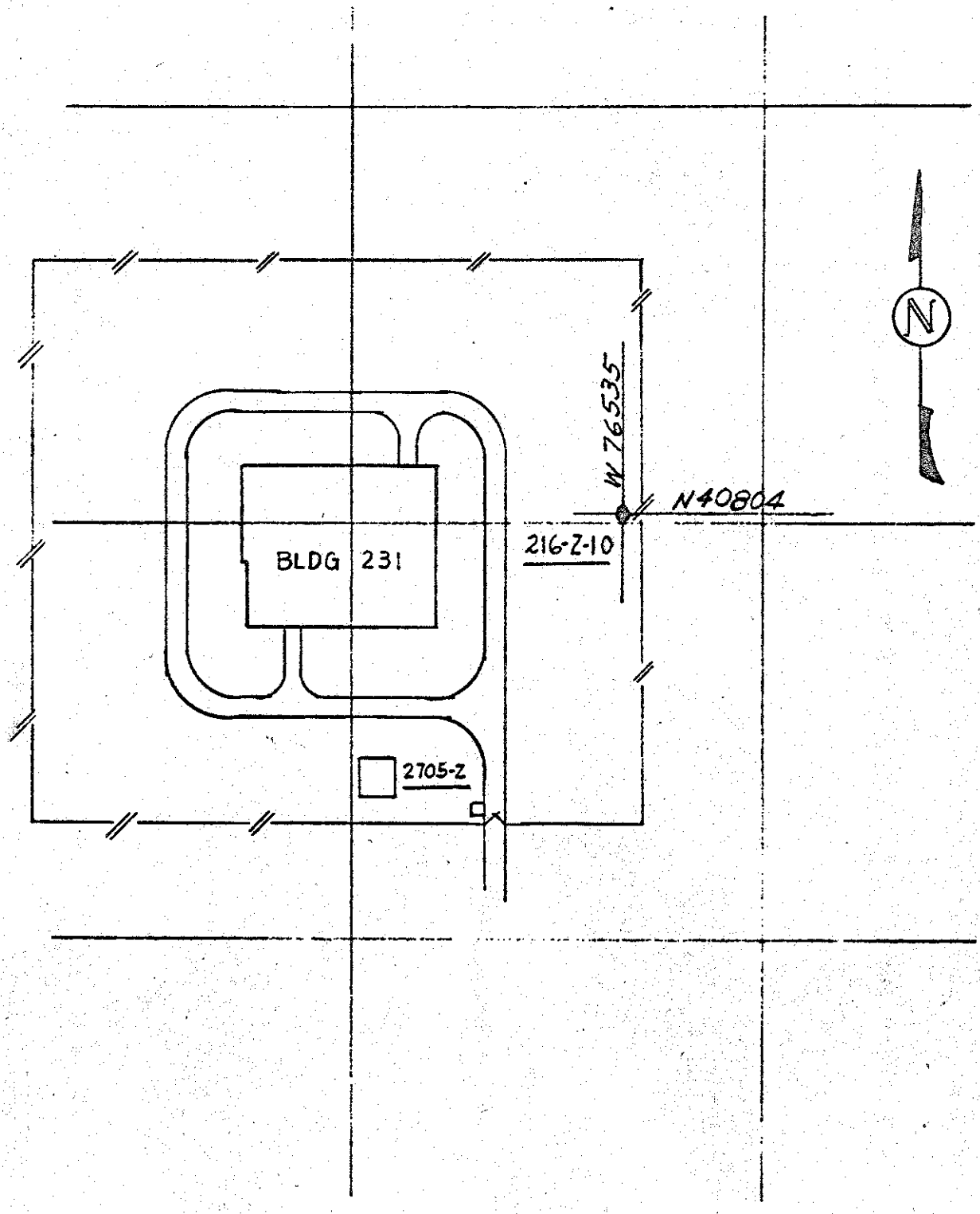


PLAN

216-Z-10

TAKEN FROM
H-2-1697
HW-76419

HW-55176-PT2
APPENDIX C-15

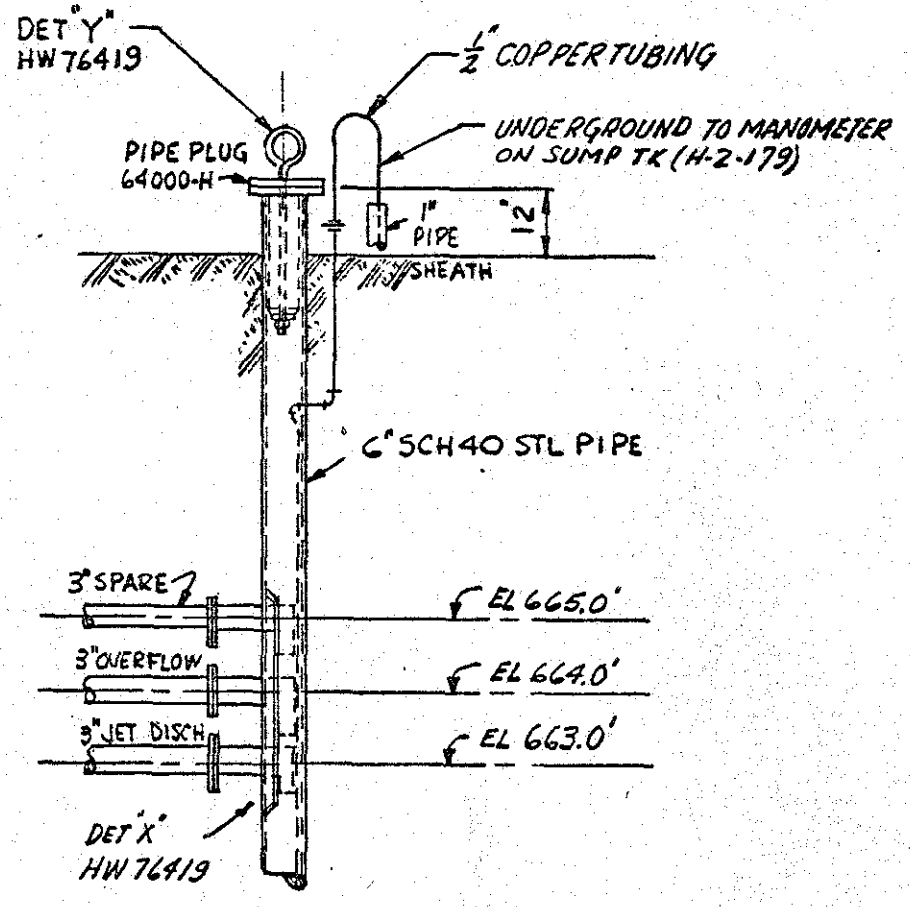


SECTION
216-Z-10

TAKEN FROM
HW-76419

HW-55176-PT2
APPENDIX C-16

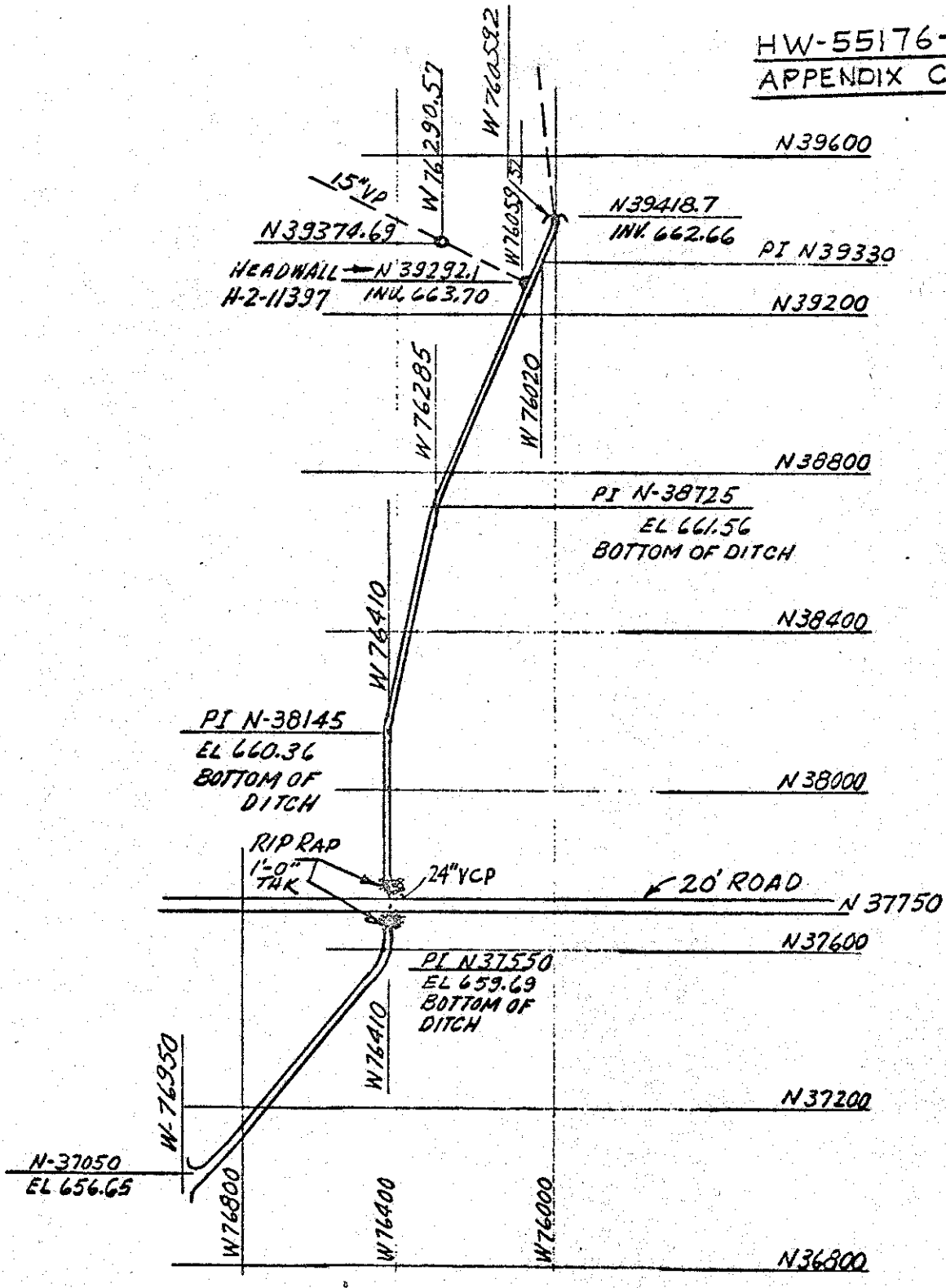


MINIMUM DITCH SECTION
4'-0" WIDE AT BOTTOM
2'-0" DEEP
2½:1 SIDE SLOPES
GRADE 0.05%

216-Z-11

HW 55176-PART 2
APPENDIX C-17
DRAWN J.L.SIMEK 12/18/59

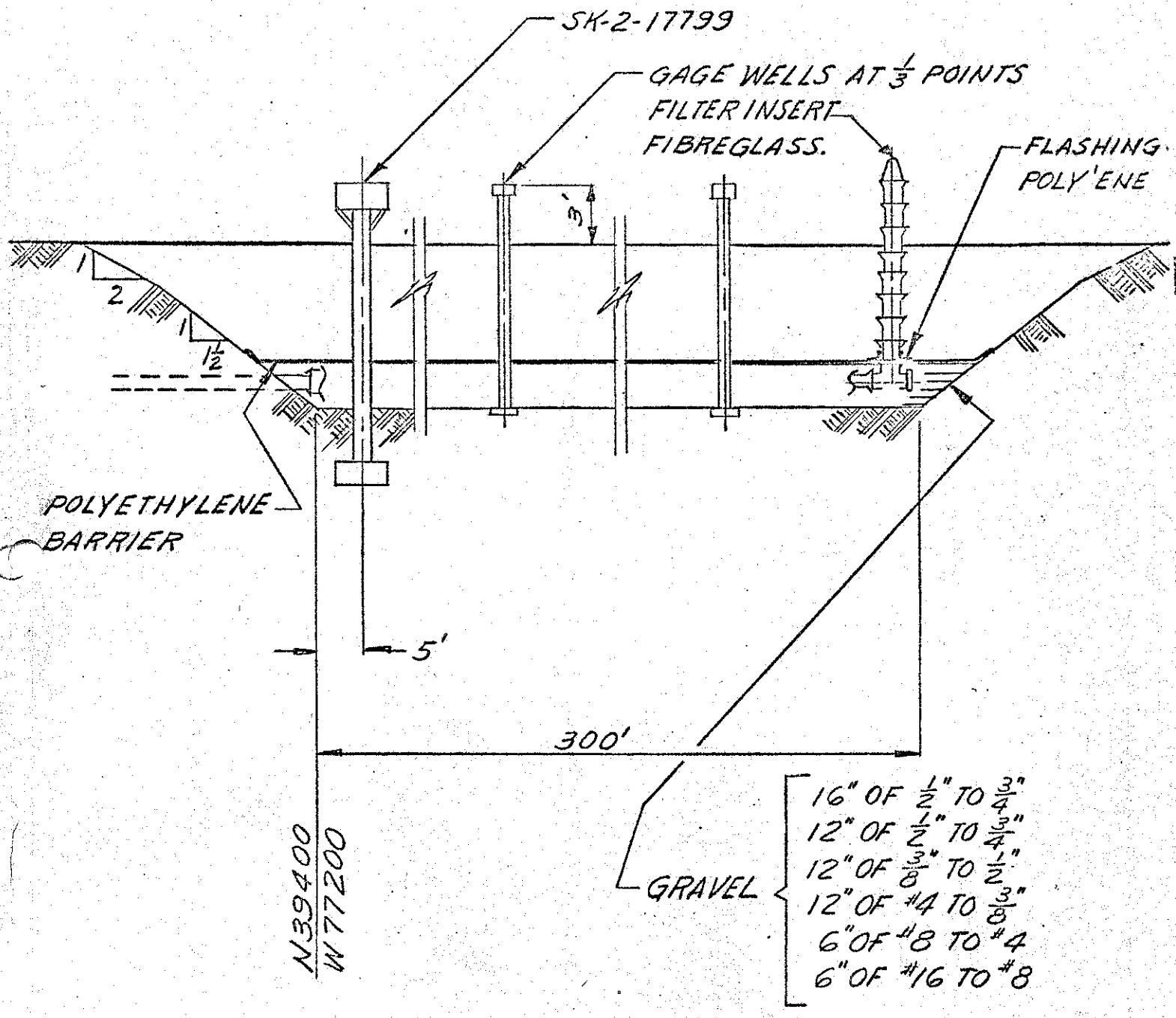


216-Z-12
H-2-20986
H-2-20987

HW55176-PART 2
APPENDIX C-18
DRAWN JLSIMEK 12/24/59

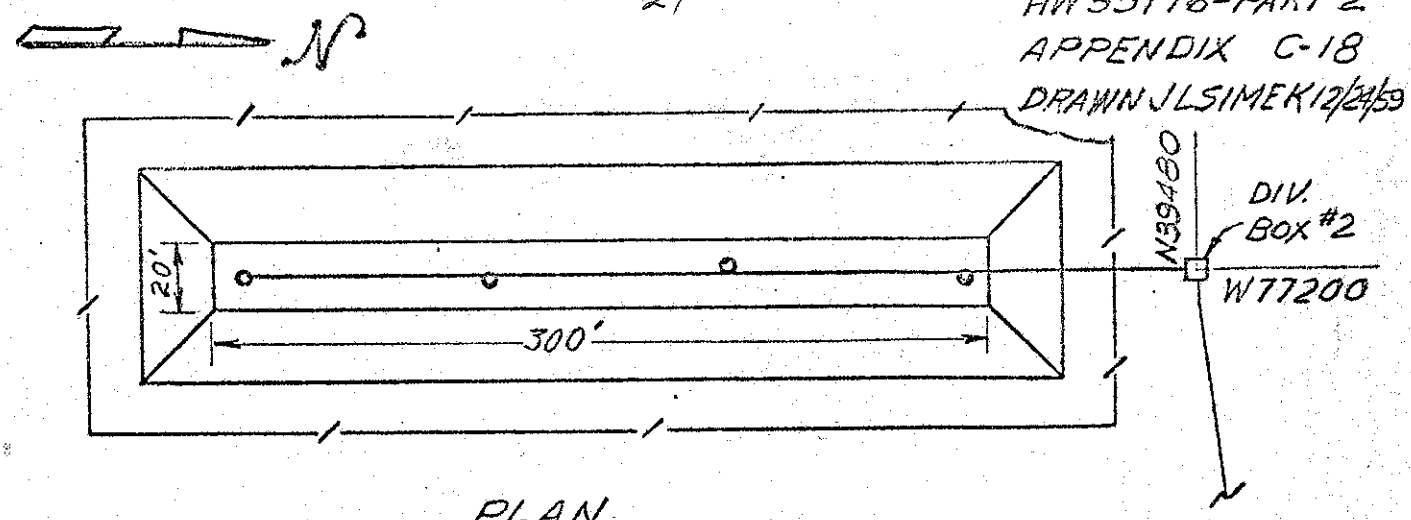


PLAN
FOR LONGITUDINAL SECTION SEE C-17

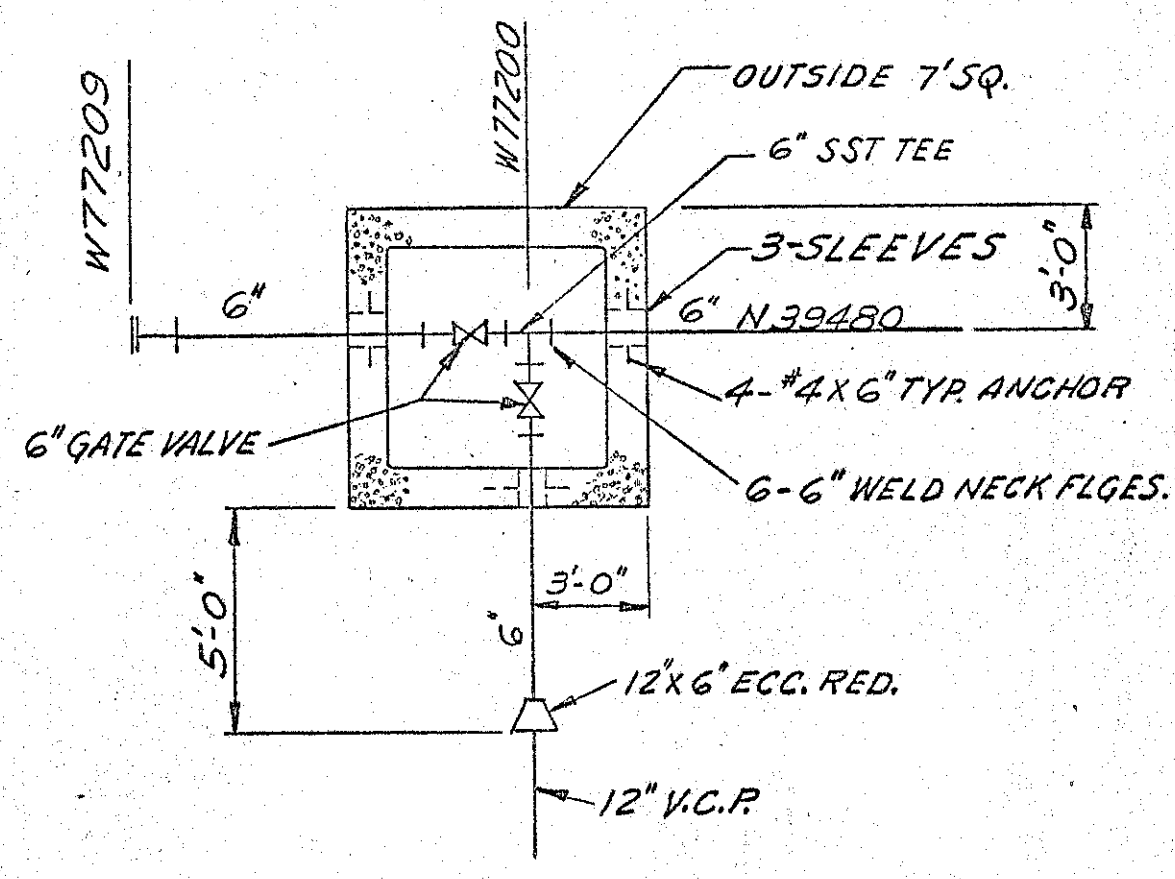


PLAN
DIVERSION BOX NO. 2

216-Z-12
H-20987

HW 55176-PART 2
APPENDIX C-19
DRAWN JL SIMEK 12/18/55

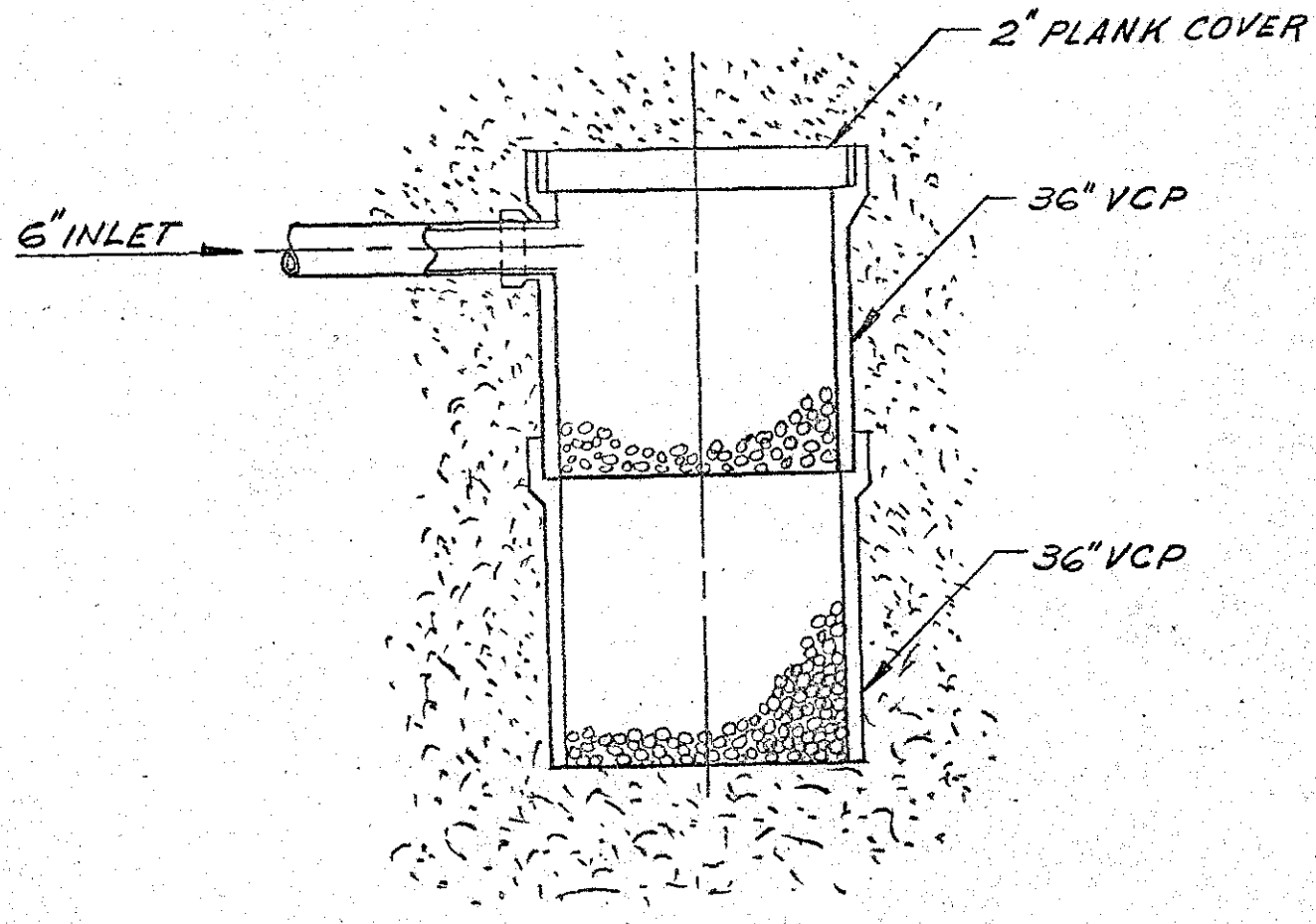


216-Z-15
216-Z-14
216-Z-13
H-2-16412

26

HW-55176-PT II
APPENDIX "D"

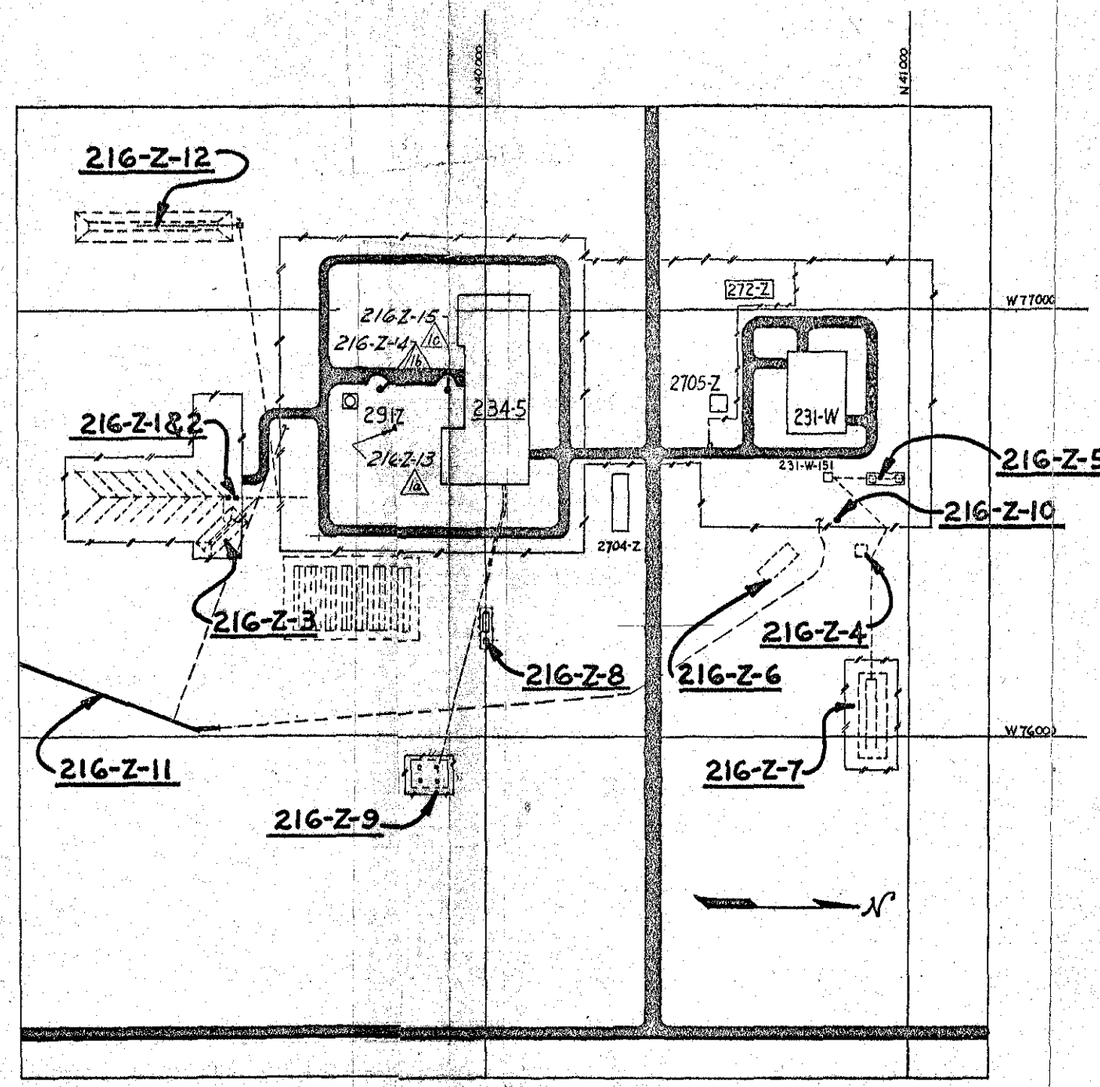


APPROVED
FOR DESIGN
NOT FOR CONSTRUCTION

| NO. | DESCRIPTION | REV. BY DATE | APP'D BY | FOR | DATE |
|---|---|---|---|---|---|
| 1. | (C) ADDED Z-15-ZONE G-C<br>(B) ADDED Z-14- ZONE G-C<br>(A) ADDED Z-13-ZONE G-C | R.L. Hall 10-21-59 | L. Brand | PHD | 11/4/59 |

REVISIONS

DWG. NO. SK-2-17807 — SHEET NO. — SHEETS — REV. NO. —

CLASSIFICATION: NONE

CLASSIFIED BY: Hugh Stivers
DATE 3/17/58

SCALE:

| APPROVALS | BY | FOR | DATE |
|---|---|---|---|
| DRAWN R. Sinclair DATE 3-14-58 | L. Brand | PHD | 10/17/59 |
| CHECKED DATE | | | |
| ISSUED DATE | | | |
| DES. ENG. UNIT | | | |
| INSV. NO. 782 | | | |
| PROJECT NO. | | | |

U. S. ATOMIC ENERGY COMMISSION
HANFORD ATOMIC PRODUCTS OPERATION
GENERAL ELECTRIC

0400

"Z" PLANT
LIQUID WASTE DISPOSAL SITES

216-Z SERIES

| REF. NO. | DWG. NO. | DRAWING TITLE |
|---|---|---|
| | | |

REFERENCE DRAWINGS
NEXT USED ON

BLDG. NO. 216Z DWG. NO. SK-2-17807 SHT. NO. — SHEETS —

Issued 3-17-58

21

# REDOX

UNCLASSIFIED
(CLASSIFICATION)

GENERAL ELECTRIC

HANFORD ATOMIC PRODUCTS OPERATION - RICHLAND, WASHINGTON

DOCUMENT NO.
HW-55176, Part III

COPY NO.

DATE
April 21, 1958

ISSUING FILE

TITLE

INDEX OF CPD CRIB BUILDING NUMBERS
DESIGNS OF CPD RADIOACTIVE LIQUID WASTE
DISPOSAL SITES

AUTHOR

V. W. Wood

| ROUTE TO | PAYROLL NO. | LOCATION | FILES ROUTE DATE | SIGNATURE AND DATE |
|---|---|---|---|---|
| WA Hunsey | | | | |
| | | | | |
| | | | | |
| | | | | |
| | | | | |
| | | | | |
| | | | | |
| | | | | |
| | | | | |
| | | | | |
| | | | | |
| | | | | |
| | | | | |
| | | | | |
| | | | | |
| | | | | |

C-1899-MS (5 - 56)

UNCLASSIFIED
(CLASSIFICATION)

TO BE USED ON UNCLASSIFIED AND OFFICIAL USE ONLY DOCUMENTS

# INDEX OF CPD CRIB BUILDING NUMBERS DESIGNS OF CPD RADIOACTIVE LIQUID WASTE DISPOSAL SITES

Part III of VII Parts
Process Technology - Study Report

by

V. W. Wood
Radiological Design and Development
Facilities Engineering Operation
CHEMICAL PROCESSING DEPARTMENT

April 21, 1958

## D I S T R I B U T I O N

| | |
|---|---|
| CR Bergdahl | TG LaFollette |
| JM Bernard | CE Linderoth |
| A Bradway | WN Mobley |
| WG Browne | HE Parker |
| E Doud | HF Peterson |
| J Durbin | DW Pearce |
| JB Fecht | OH Pilkey |
| DR Gustavson | EL Reed |
| CT Groswith | RA Roberts |
| WA Haney | HP Shaw |
| JF Honstead | ML Short |
| IM Jacques | W Tressler |
| EB Jackson | VW Wood |
| CE Kent | 300 Files |

# INDEX OF CPD CRIB BUILDING NUMBERS DESIGNS OF CPD RADIOACTIVE LIQUID WASTE DISPOSAL SITES

## Part III of VII Parts
## Process Technology - Study Report

## INTRODUCTION

During the fourteen years or more which the separations areas have operated, many sites have been used for the disposal of radioactive liquid wastes. Various methods have been used in assigning building numbers to these sites and, in a number of cases, changes have been made which have brought about some confusion. One of the reasons being some currently used building numbers do not agree with the numbers existing on design prints for the facilities. Reference (2) was an effort to establish a listing of the liquid waste disposal sites. It required considerable time and research to locate information concerning these sites.

Many varied designs have been used for the disposal of radioactive liquid wastes. Reverse wells, trenches, cribs or caverns, etc, have been used. Specific information on these facilities is often difficult to obtain for in some instances they were constructed on work orders with no recorders being retained on the design. In general, the design on each facility has been different. This has made it extremely difficult for people to have a good working knowledge of the various waste disposal sites.

## PURPOSE

The purpose of this report (Part III) is to provide a ready reference to the Redox Plant liquid waste disposal sites as well as a compilation of sketches showing the basic information on the design of each facility.

Another objective is to establish a simplified and uniform numbering system. Still another objective is to provide an up-to-date tabulation. Subsequent parts of this report will provide information on cribs for such plants as "B" and "T" Plant.

## SUMMARY AND CONCLUSIONS

All radioactive liquid waste disposal sites should have the 216 Building number designation. These should be further grouped by giving all such sites for Purex a prefix of 216-A. Other major series would be 216-S for Redox; 216-T for "T" Plant; 216-B for "B" Plant; 216-B for "B" Plant; and 216-Z for "Z" Plant.

The numbering list in "Official Hanford Works Building List - Specification HW-5000" by Engineering Files - Construction Engineering Operation should be revised to more closely follow the above numbering system.

RECOMMENDATIONS

It is recommended that the following action be taken:

1. All groups and services referring to the Redox Plant cribs or report data concerning them should use the index numbering system as presented in this report. In the case of Redox Plant this means several changes. See cross reference, page 4.

2. That all drawings concerning these disposal sites, including maps, be revised to show the proper locations and numbers for these cribs.

3. Any suggestions for improving the usefulness of this report should be referred to the author.

DISCUSSION

When all seven parts of the report are completed, and the work outlined in the report is completed, much confusion will be eliminated and more people will be better informed on the design of each waste disposal facility. The report will provide a firm basis for future building number assignments.

While some sincere efforts have been made to try and keep a methodical system for recording waste disposal sites, a number of problems have developed, for example, HW-5000, Sheet 29 of 50 lists, only eight cribs in the 216-3 series. Also reference 2 has assigned numbers which do not agree with the crib numbers assigned on many drawings.

As indicated earlier, the use of the crib index, as presented in this report should be very easy. In addition, information is presented which is very difficult to locate in the records and in some cases it is not available in the records.

REFERENCES

1. HW-5000, "Official Hanford Works Building List - Specification HW-5000" by Engineering Files - Construction Engineering Operation.

2. HW-43121, "Tabulation of Radioactive Liquid Waste Disposal Facilities" by HV Clukey dated May 10, 1956.

3. HW-33305, "Tabulation of Radioactive Liquid Waste Disposal Facilities" by HV Clukey dated October 8, 1954.

4. HW-41535, "Uncofined Underground Radioactive Waste and Contamination in the 200 Areas" by KR Heid dated January 17, 1956.

CROSS REFERENCE
REDOX PLANT RADIOACTIVE LIQUID WASTE
DISPOSAL SITES

| Suggested Crib No. | Number Listed in HW-5000 | Number Listed in HW-43121 | Number Used On Drawings or Original Number |
|---|---|---|---|
| 216-S-1 | 216-S-1 | 216-S-5 | 216-S-1 |
| 216-S-2 | 216-S-2 | 216-S-5 | 216-S-2 |
| 216-S-3 | 216-S-3 | 216-S-8 | 216-S-3 |
| 216-S-4 | 216-S-4 | 216-S-7 | 216-S-4 |
| 216-S-5 | 216-S-5 | 216-S-9 | 216-S-5 |
| 216-S-6 | 216-S-6 | 216-S-13 | 216-S-6 |
| 216-S-7 | 216-S-7 | 216-S-15 | 216-S-7 |
| 216-S-8 | 216-S-8 | 216-S-3 | 216-S-8 |
| 216-S-9 | None | None | 216-S-9 |
| 216-S-10 | None | 216-S-10 | 216-S-10 |
| 216-S-11 | None | 216-S-11 | None |
| 216-S-12 | None | 216-S-12 | None |
| 216-S-13 | None 276-S Crib | 216-S-6 | None |
| 216-S-14 | None | 216-S-4 | None |
| 216-S-15 | None | 216-S-2 | None |
| 216-S-16 | None | 216-S-16 | None |
| 216-S-17 | None | 216-S-1 | None |
| 216-S-18 | None | 216-S-14 | None |
| 216-S-19 | 216-SL-7 | 216-SL-1 | None |
| 216-S-20 | None | 216-SL-2 | None |
| 216-S-21 | 216-SX-1, 2 | 216-SX-1 | 216-SX-1 |
| 216-S-22 | Fractionator Crib | | |

APPENDIX

A. Explanation of Parts to the Report

Part I will cover the Purex Radioactive Liquid Waste Disposal Sites.

Part II will cover the "Z" Plant Radioactive Liquid Waste Disposal Sites.

Part III will cover the Redox Plant Radioactive Liquid Waste Disposal Sites.

Part IV will cover the "U" Plant Radioactive Liquid Waste Disposal Sites.

Part V will cover the "T" Plant Radioactive Liquid Waste Disposal Sites.

Part VI will cover the "B" Plant Radioactive Liquid Waste Disposal Sites.

Part VII will cover the "C" Plant, Hot Semi-Works, the 200 North Areas and miscellaneous.

B. Index for Redox Plant Radioactive Liquid Waste Disposal Sites.

C. Sketches of Redox Plant Waste Disposal Facilities.

D. Map of Redox Plant Sites (SK-2-17808).

# CRIB INDEX

## Redox

| Number | Description Appendix Sheet | Service | Use Dates From | Use Dates To | Status |
|---|---|---|---|---|---|
| 216-S-1 | C-1, 2 & 3 | D-2 Process Condensate | 1/52 | 1/56 | Replaced by S-7 |
| 216-S-2 | C-1, 2 & 3 | Overflow from S-1 | 1/52 | 1/56 | Replaced by S-7 |
| 216-S-3 | C-4 | 241-S TK 101 & 104 Condensate | 8/53 | - | Abandoned |
| 216-S-4 | C-4 | 241-S TK 101 & 104 Condensate | 8/53 | - | Abandoned |
| 216-S-5 | C-5, 6 & 7 | Steam Condensate | 3/54 | 11/54 | Replaced by S-6 |
| 216-S-6 | C-8 & 9 | Steam Condensate | 11/54 | - | Active |
| 216-S-7 | C-10 & 11 | D-2 Process Condensate | 1/56 | - | Active |
| 216-S-8 | C-12 | Startup Wastes | 11/51 | 2/52 | Abandoned |
| 216-S-9 | None | Ditch to Chemical Waste Pit | 2/54 | - | Active |
| 216-S-10 | C-16 | Chemical Waste Pit | 2/54 | 5/54 | Replaced by S-11 |
| 216-S-11 | C-16 | Chemical Waste Pit | 5/54 | - | Active |
| 216-S-12 | C-17 | 291-S Stack Wash Water | | 7/54 | Abandoned |
| 216-S-13 | C-18 & 19 | Organic Waste | 2/52 | - | Active |
| 216-S-14 | C-20 | Organic Startup Waste | | 1/52 | Abandoned |
| 216-S-15 | C-21 | 241-S TK 110 Condensate | | 10/52 | Abandoned |
| 216-S-16 | C-22 | Cooling Water Swamp | 4/54 | - | Active |
| 216-S-17 | C-23 | Cooling Water Swamp | 3/52 | 4/54 | Replaced by S-16 |
| 216-S-18 | C-24 | Steam Cleaning Pit | 10/54 | - | Not in use |
| 216-S-19 | C-25 | 222-S Cooling Water | 1/52 | - | Active |
| 216-S-20 | C-26,27 & 28 | 222-S & 300 Area Wastes | 3/52 | - | Active |
| 216-S-21 | C-29 & 30 | 241-SX Condensate | 11/54 | - | Active |
| 216-S-22 | C-31 | 293-S Caustic Scrubber Wastes | 1957 | - | Inactive |

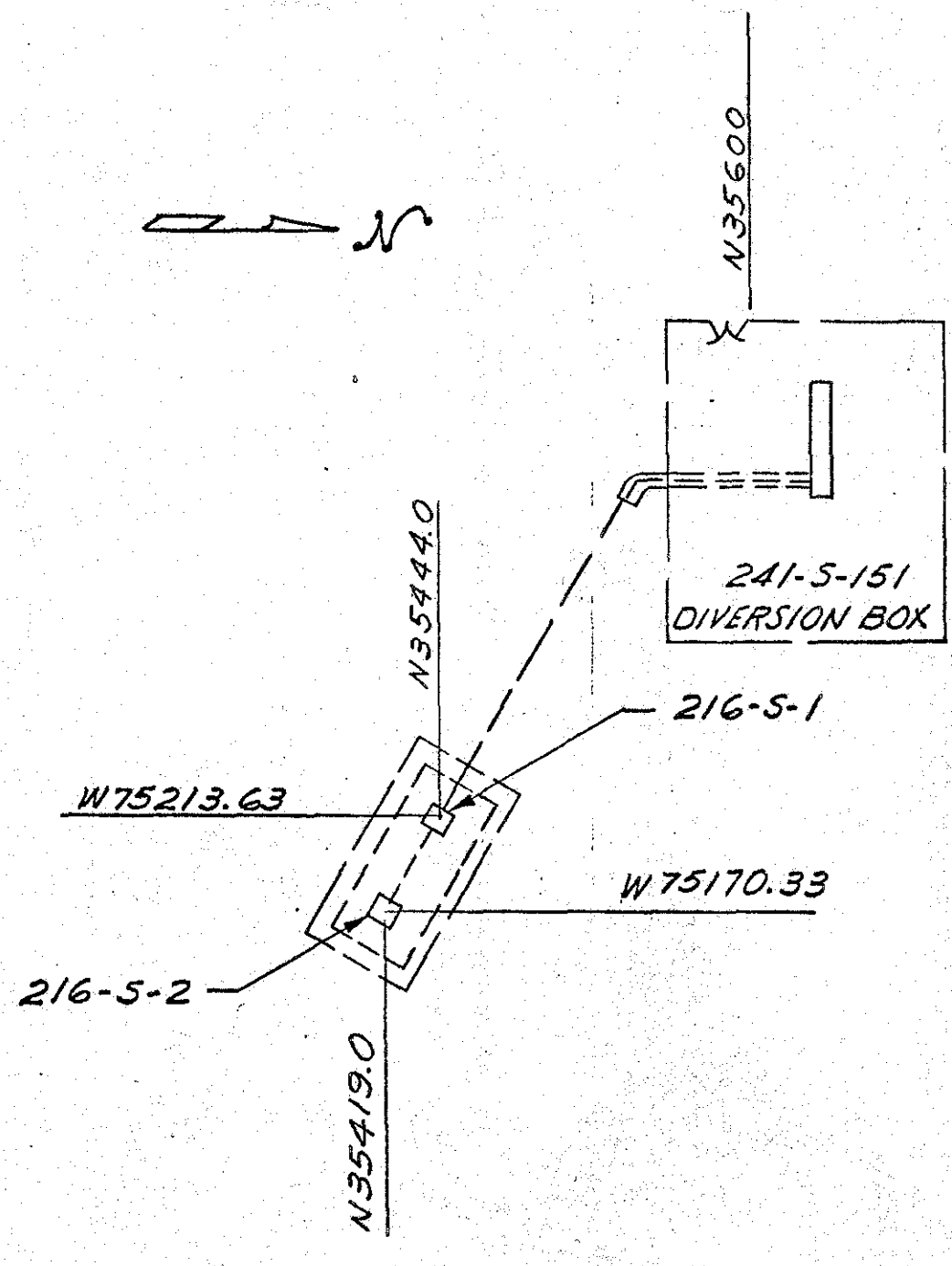


216-S-1
216-S-2
H-2-1813
H-2-1774

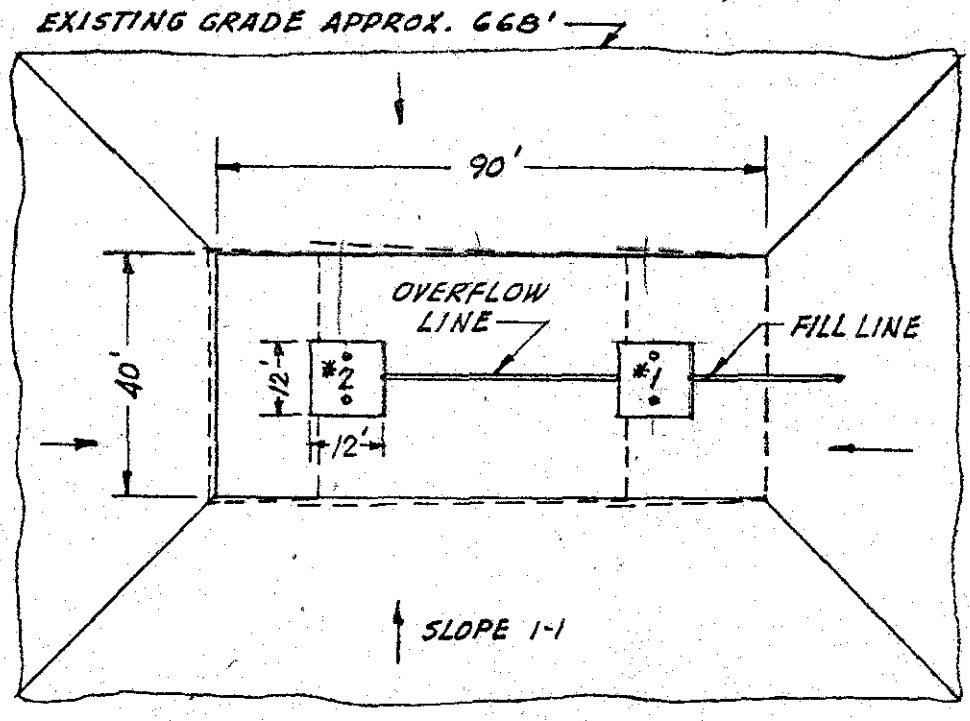


PLAN

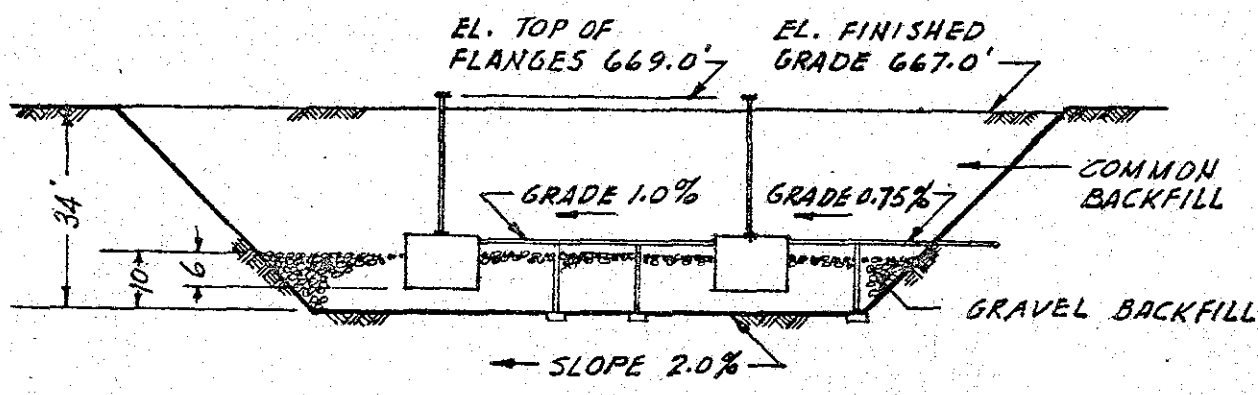


LONGITUDINAL SECTION

TAKEN FROM H-2-1813

216-S-1 & 2 Cribs

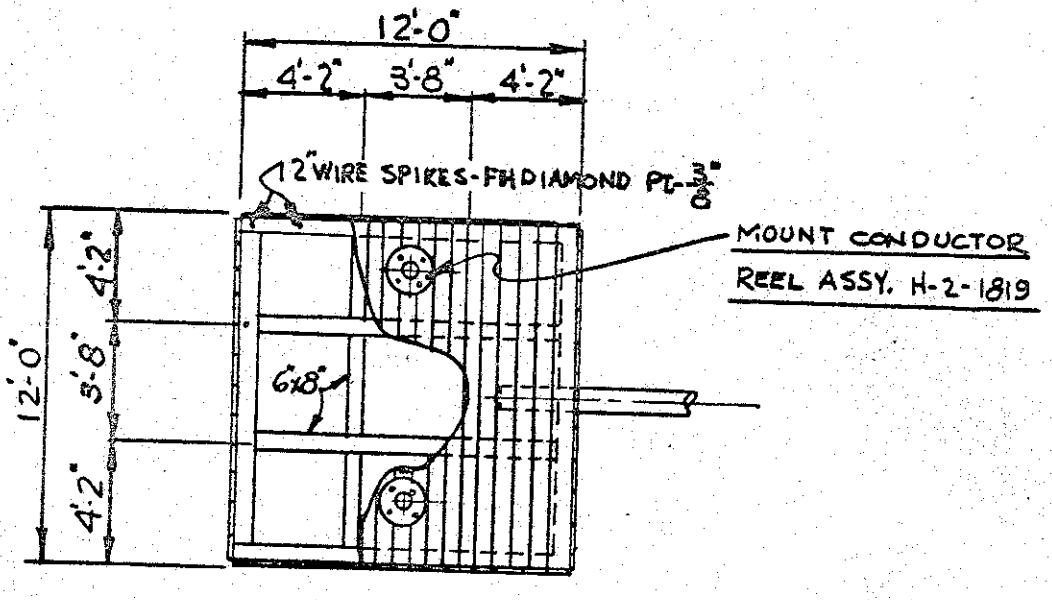


PLAN

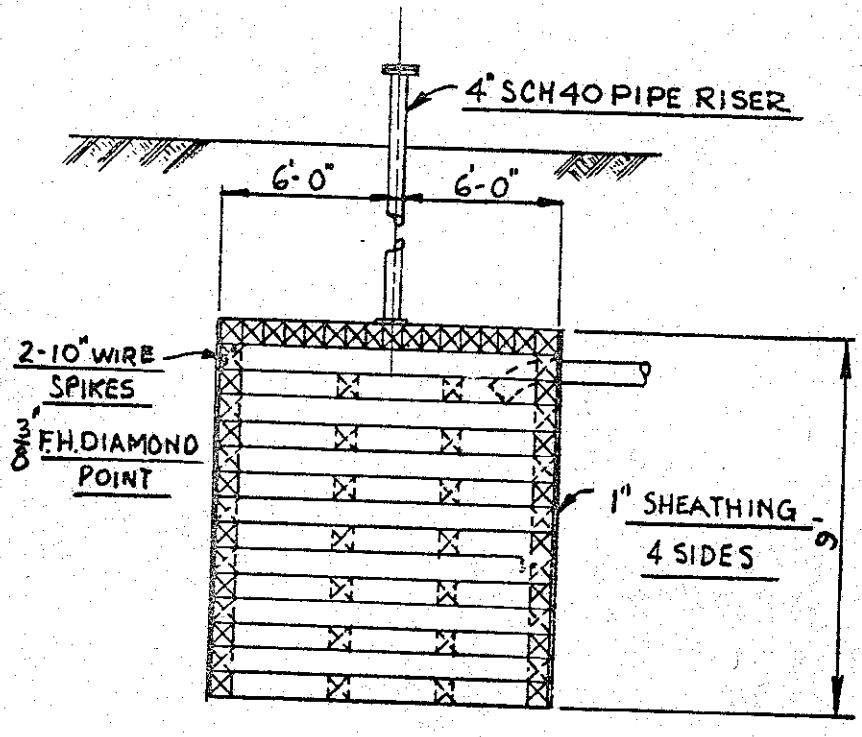


CRIB

TAKEN FROM H-2-1813

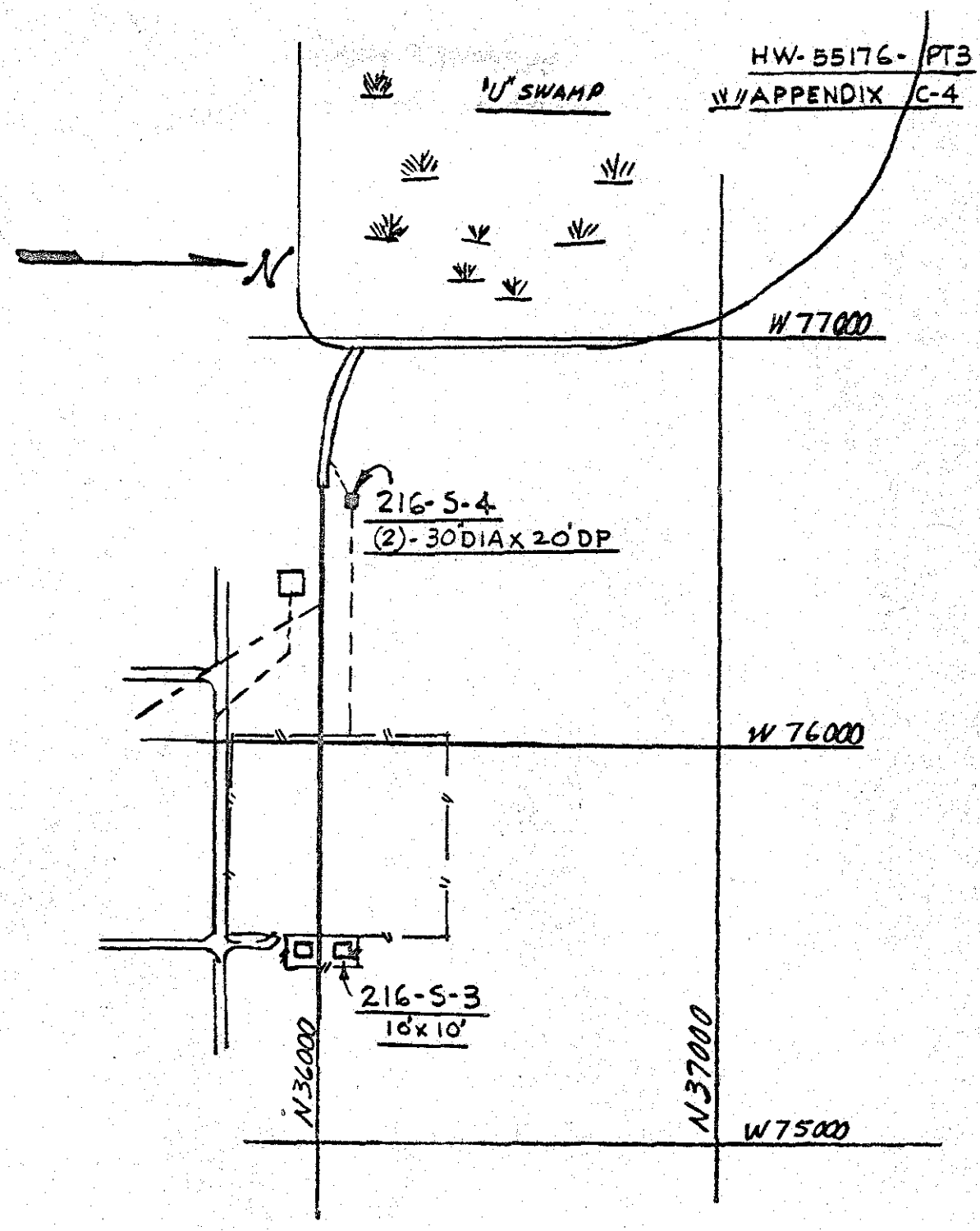


TAKEN FROM SK-2-1726
SUPERSEDED BY H-2-39574
NO INFORMATION AVAILABLE
2892 - SHT 19

216-S-3
216-S-4

5

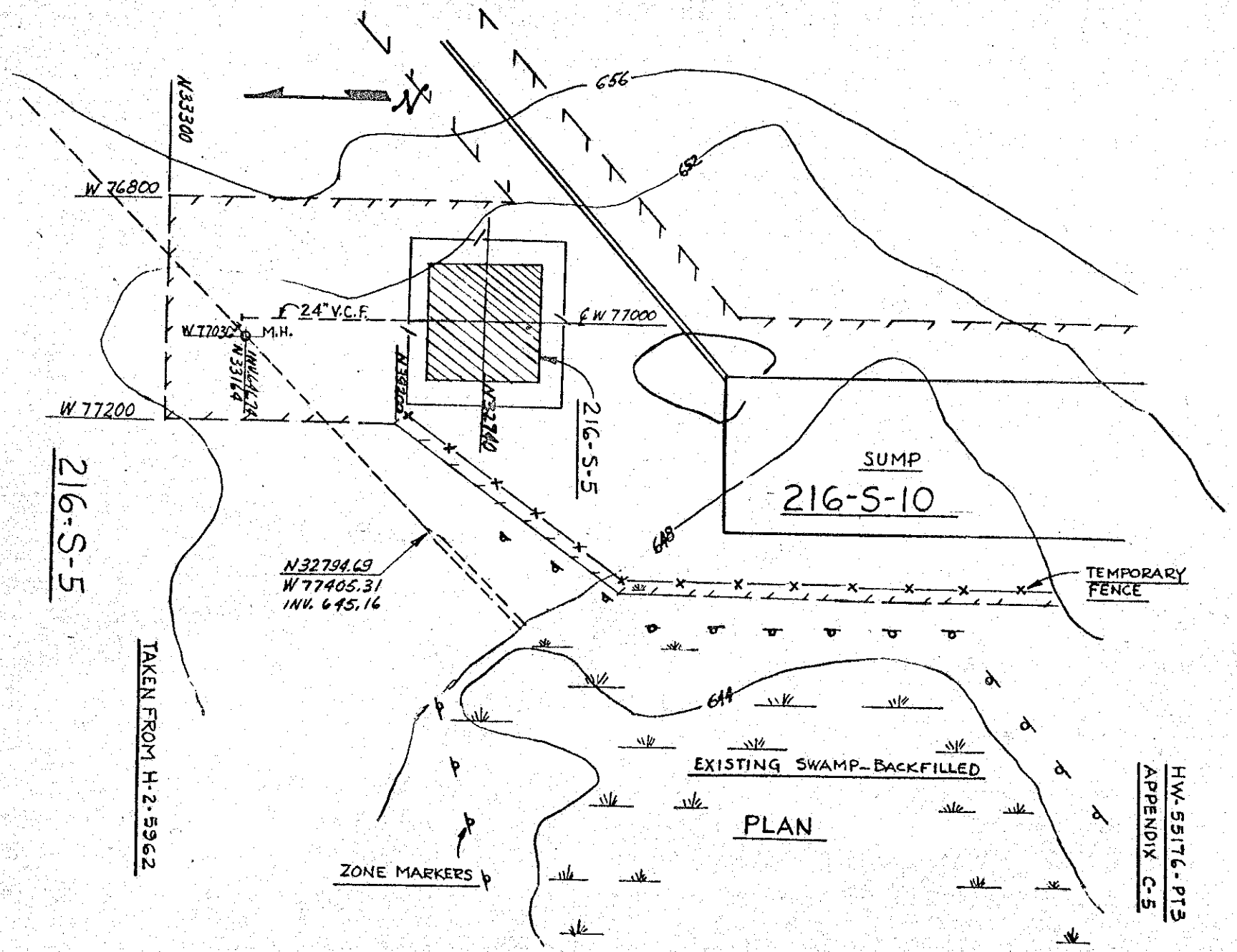


HW-55176-PT3
APPENDIX C-5

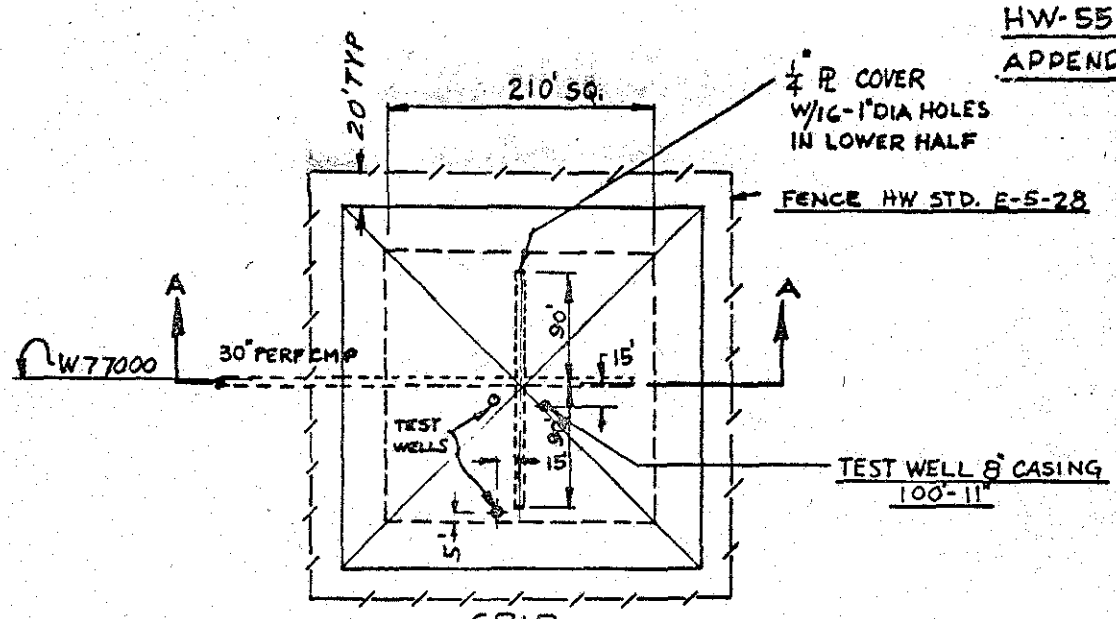


CRIB
216-S-5

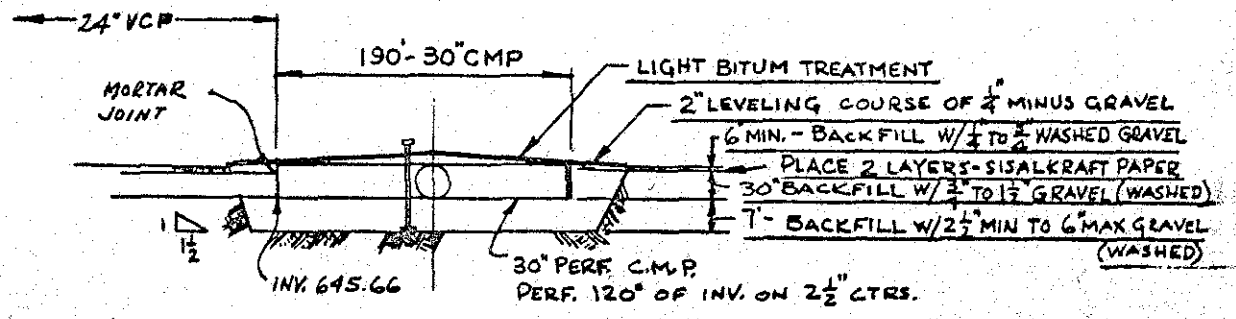


SECTION A-A

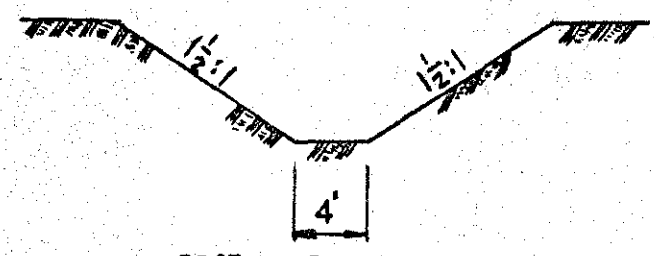


SECTION THRU DITCH

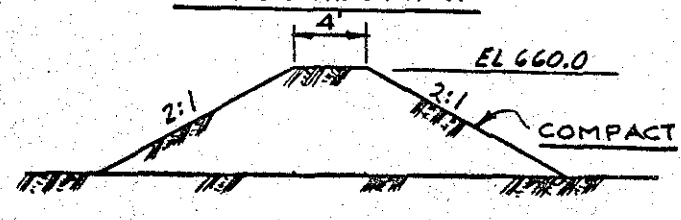


SECTION THRU DIKE

TAKEN FROM H-2-5963

216-S-5

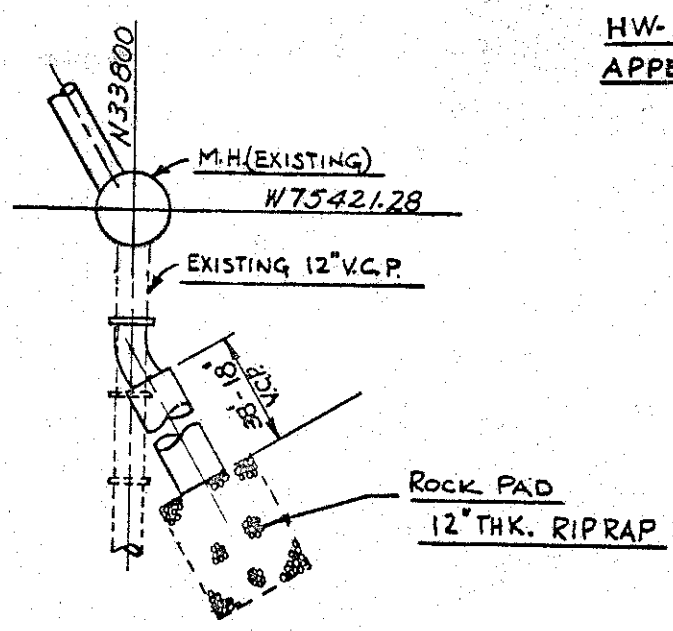


TIE-IN AT DITCH INLET

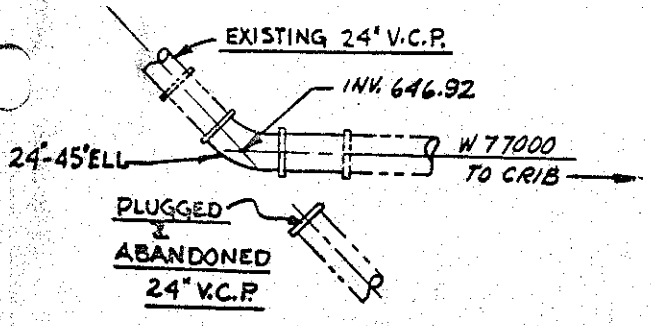


CRIB LINE TIE-IN

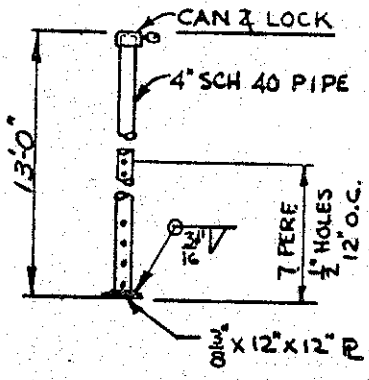


TEST WELL

TAKEN FROM H-2-5963

216-S-5

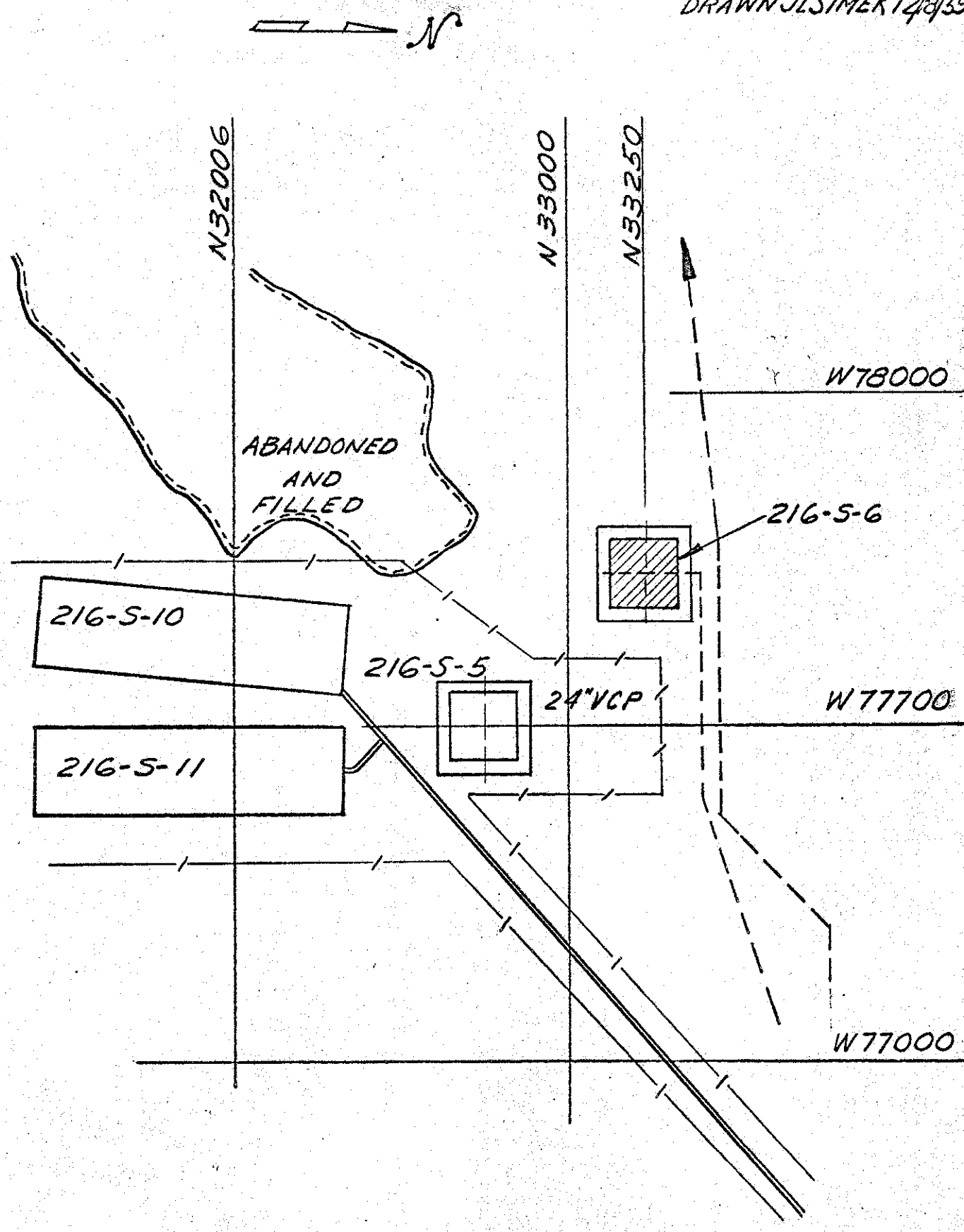


216-S-6
H-2-2594

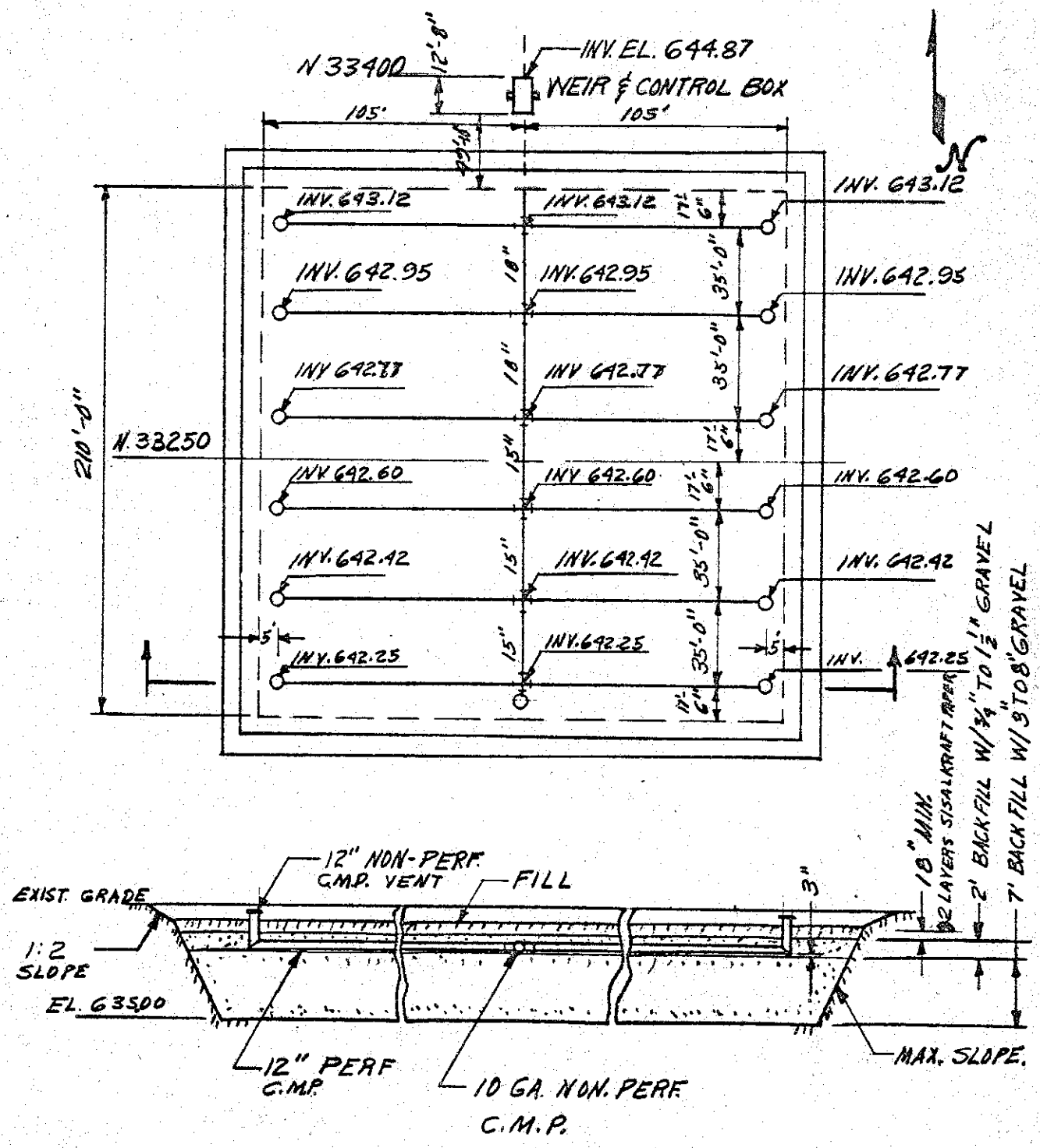


TAKEN FROM H-2-2595

REDOX WASTE WATER DISPOSAL FACILITIES

CRIB & CONTROL STRUCTURE

216-S-6

HW 55176-PART 3
APPENDIX C-10
DRAWN JLSIMEK 12/15/59

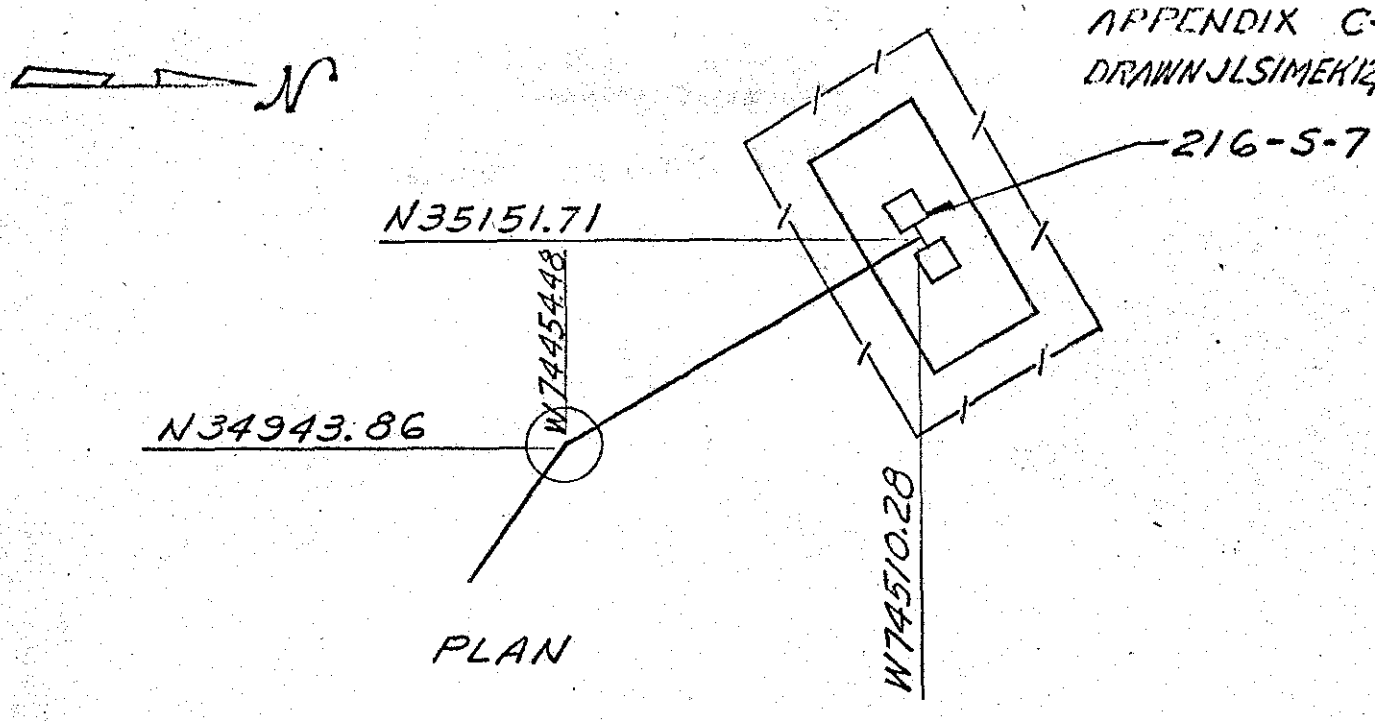


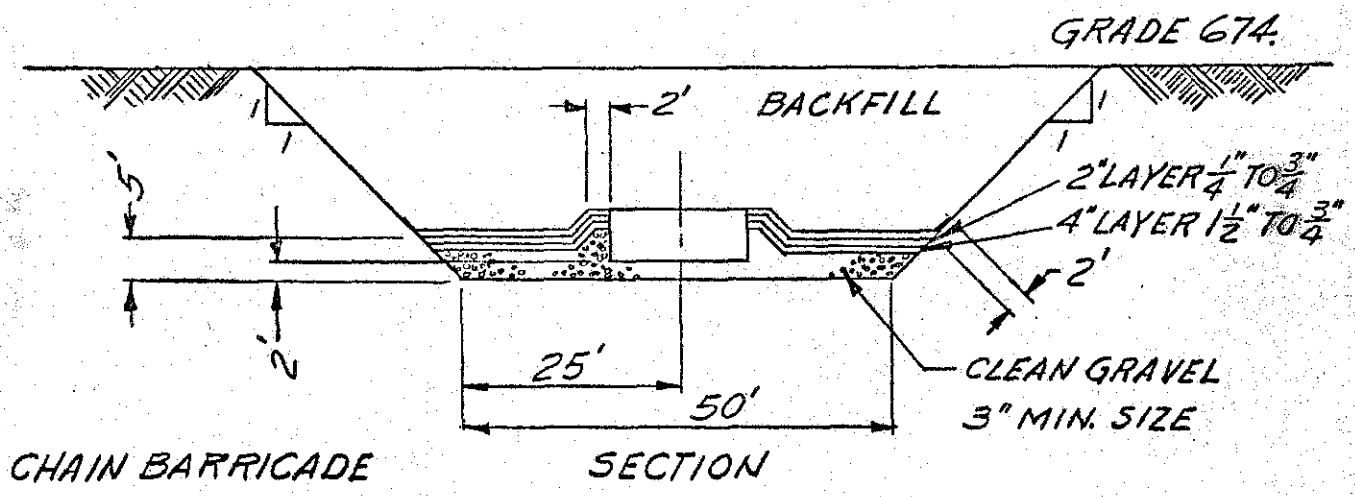


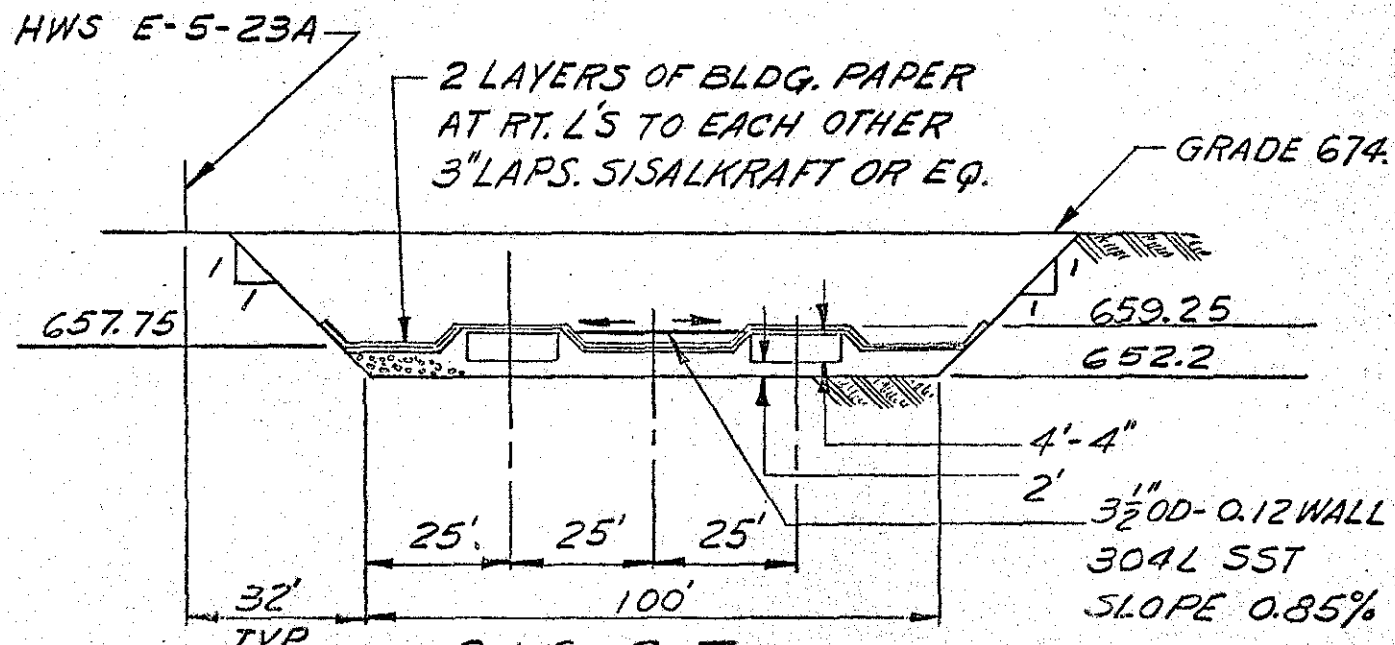


216-S-7
H-2-30135

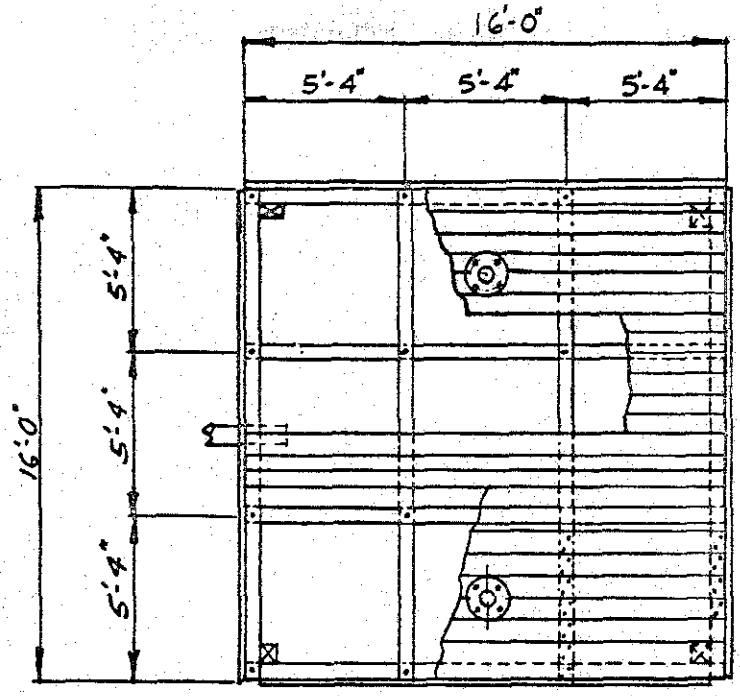


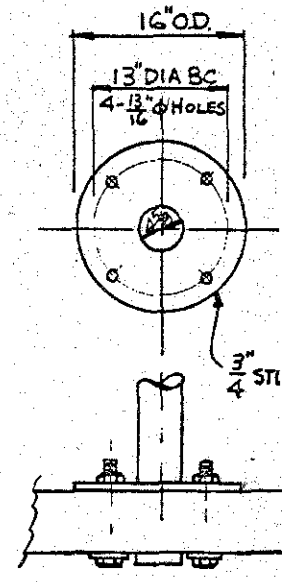


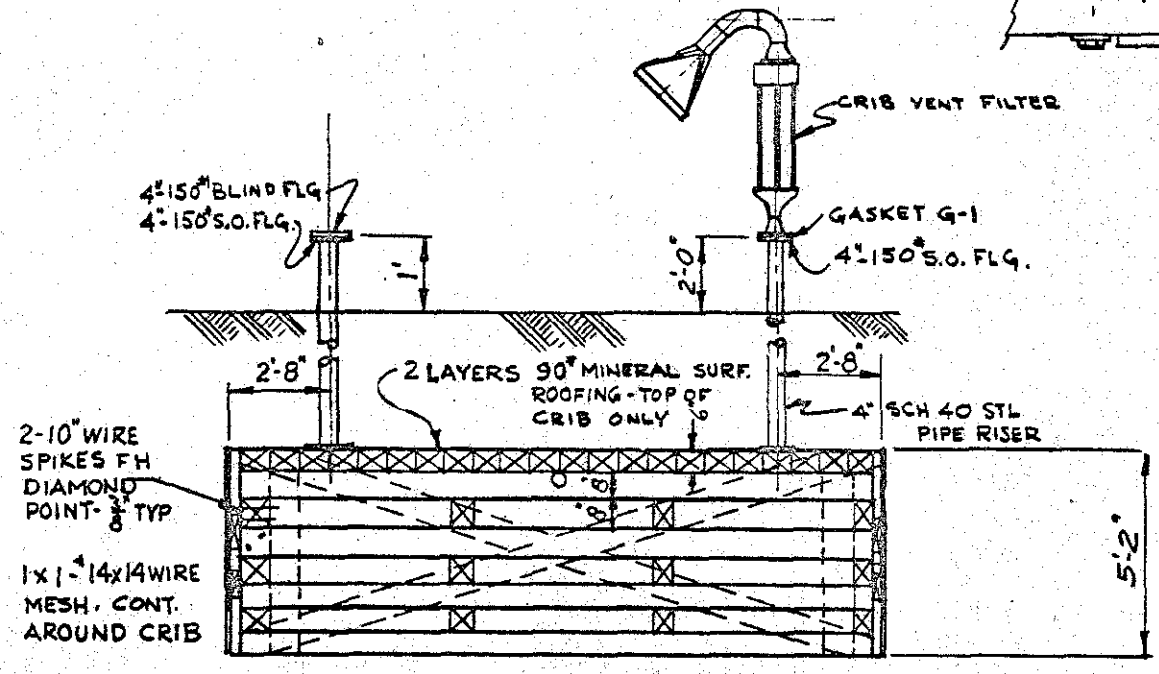


TAKEN FROM H-2-301

216-S-7

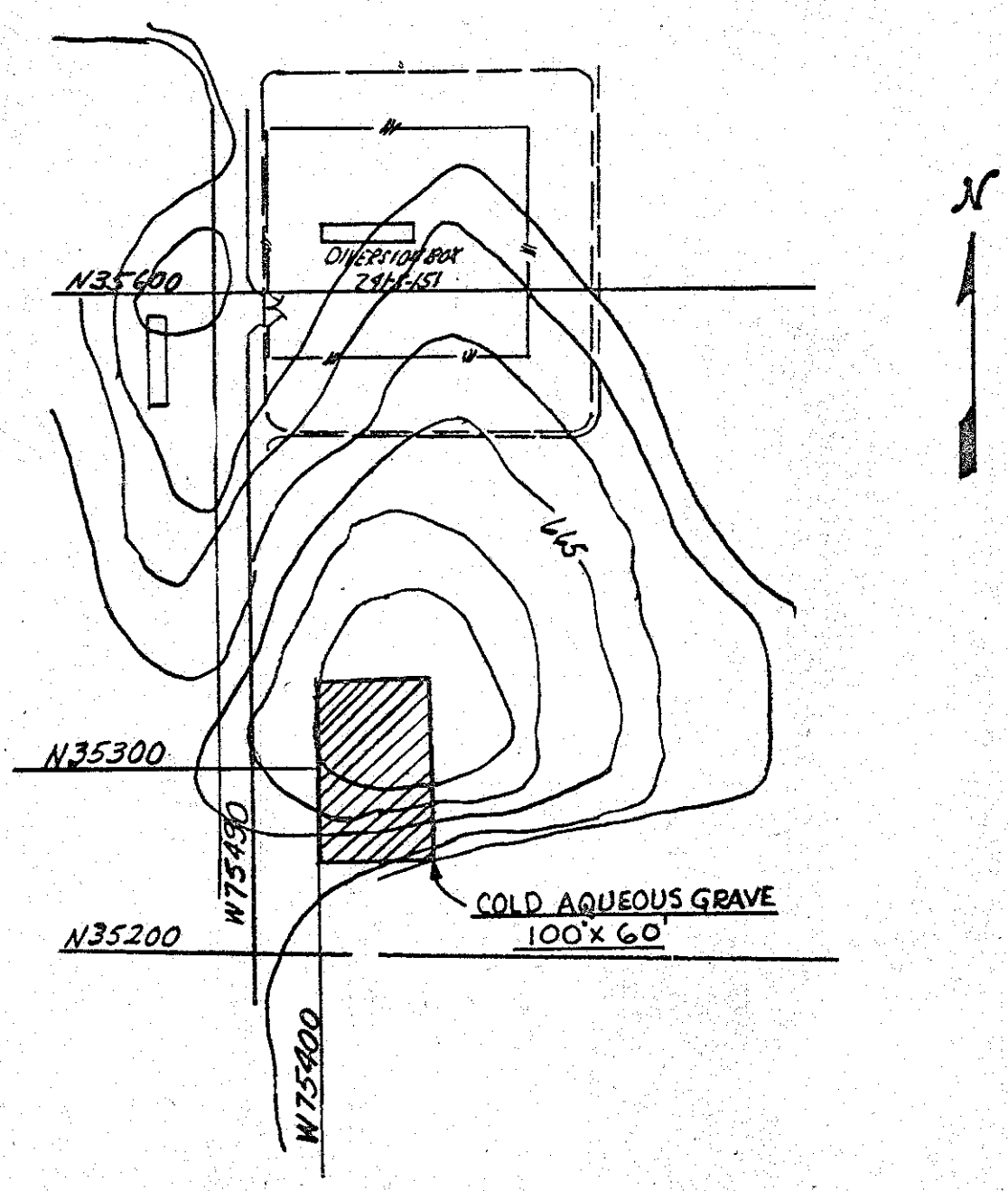
N
DIVERSION BOX
241-S-151
N35600
N35300
N35200
W75490
W75400
445
COLD AQUEOUS GRAVE
100' x 60'

216-S-8

HW-55176-PT 3
APPENDIX C-16
DRAWN JL SIMEK 12/4/59

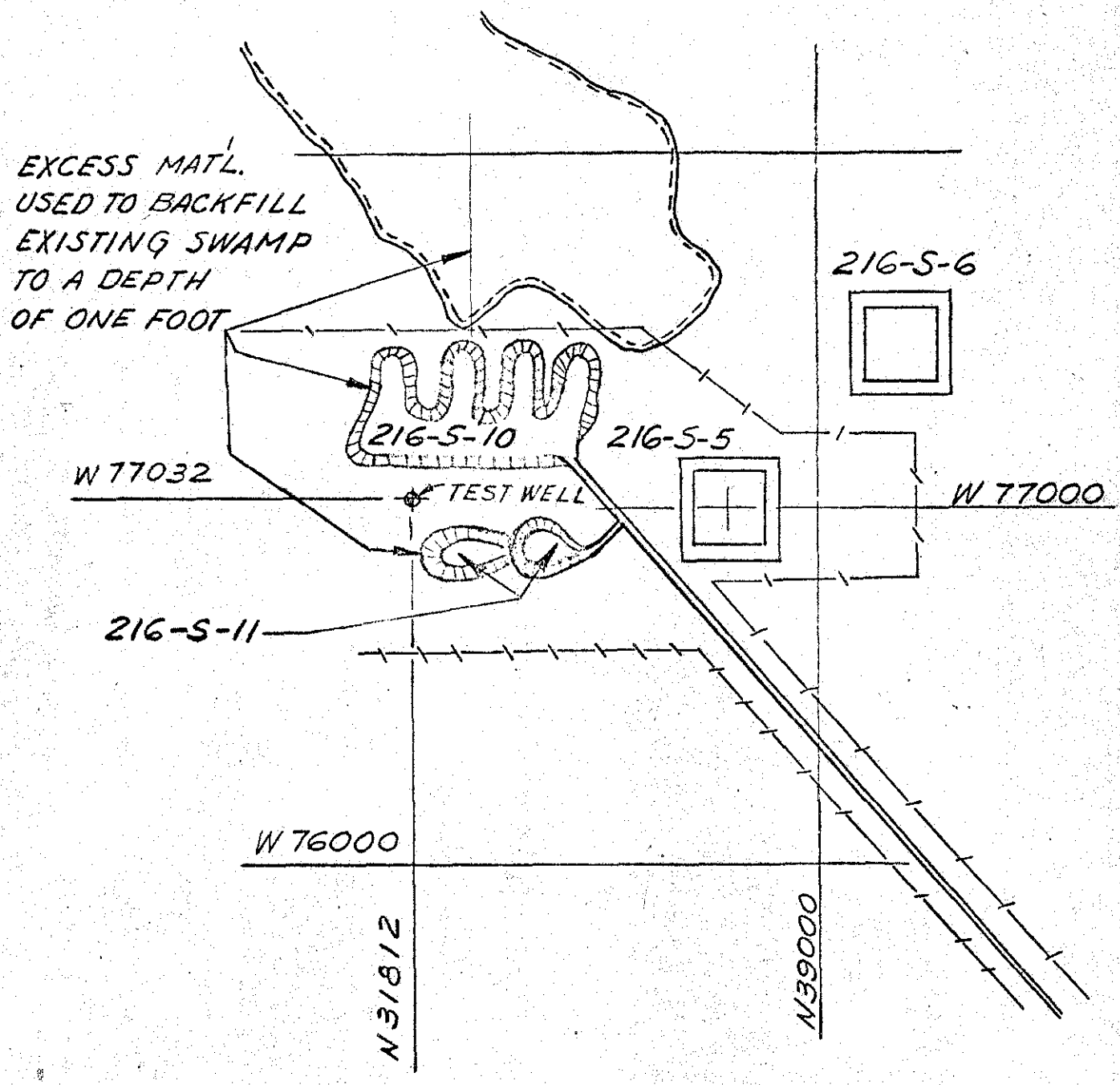


216-S-10

216-S-11

H-2-5962

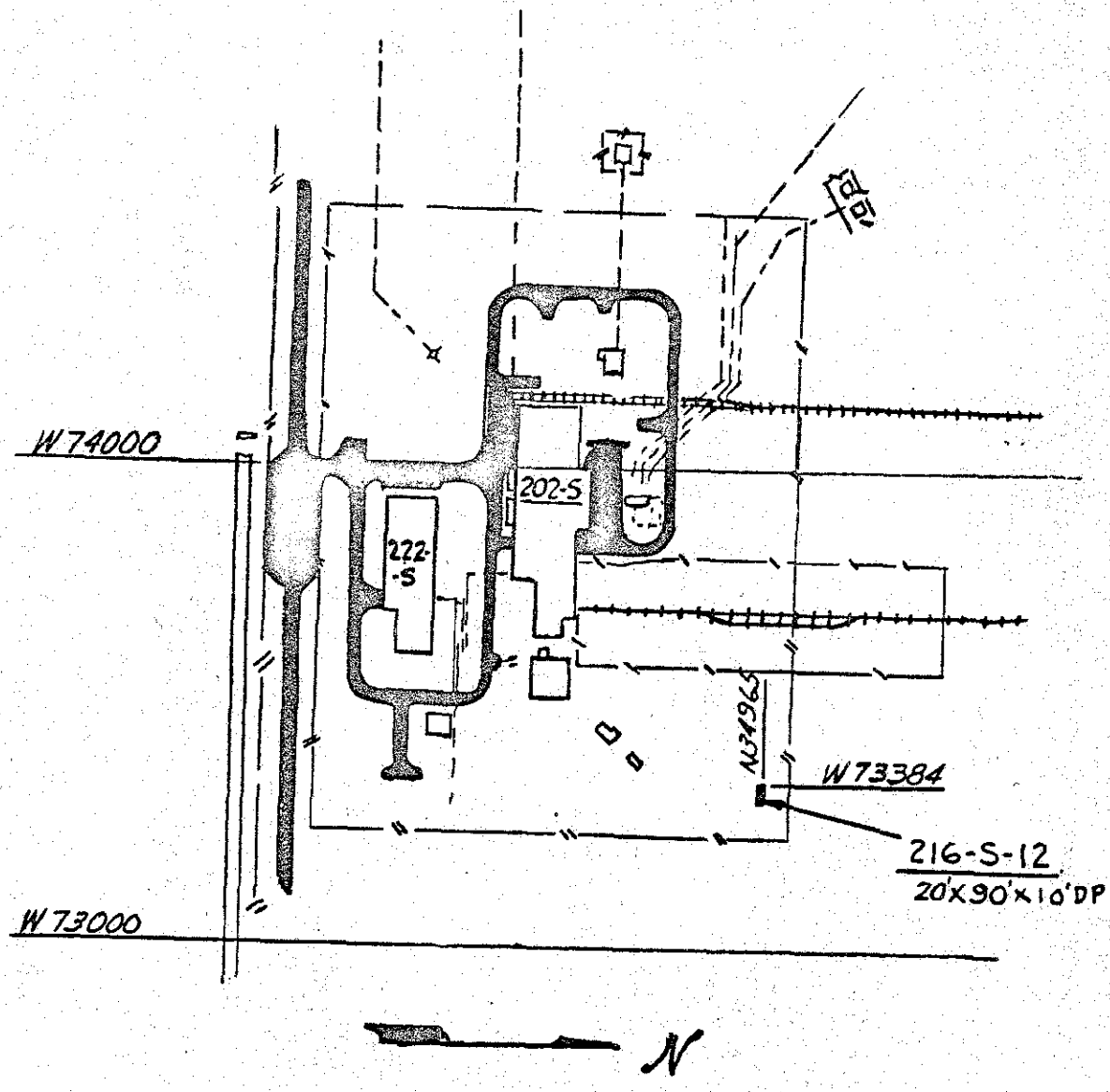


TAKEN FROM H-2-2430

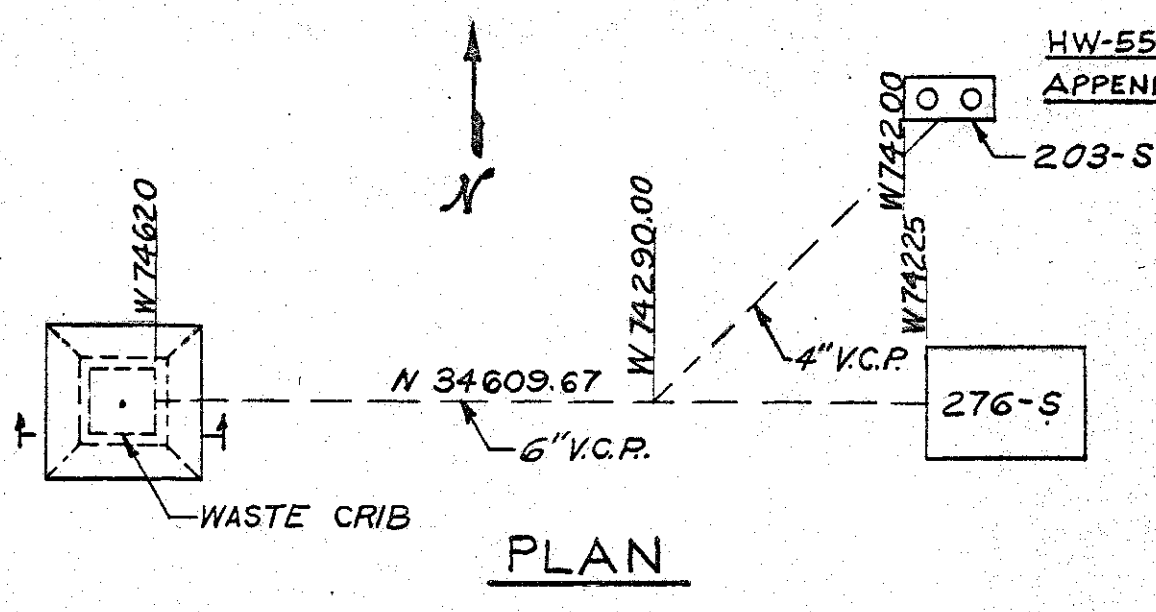


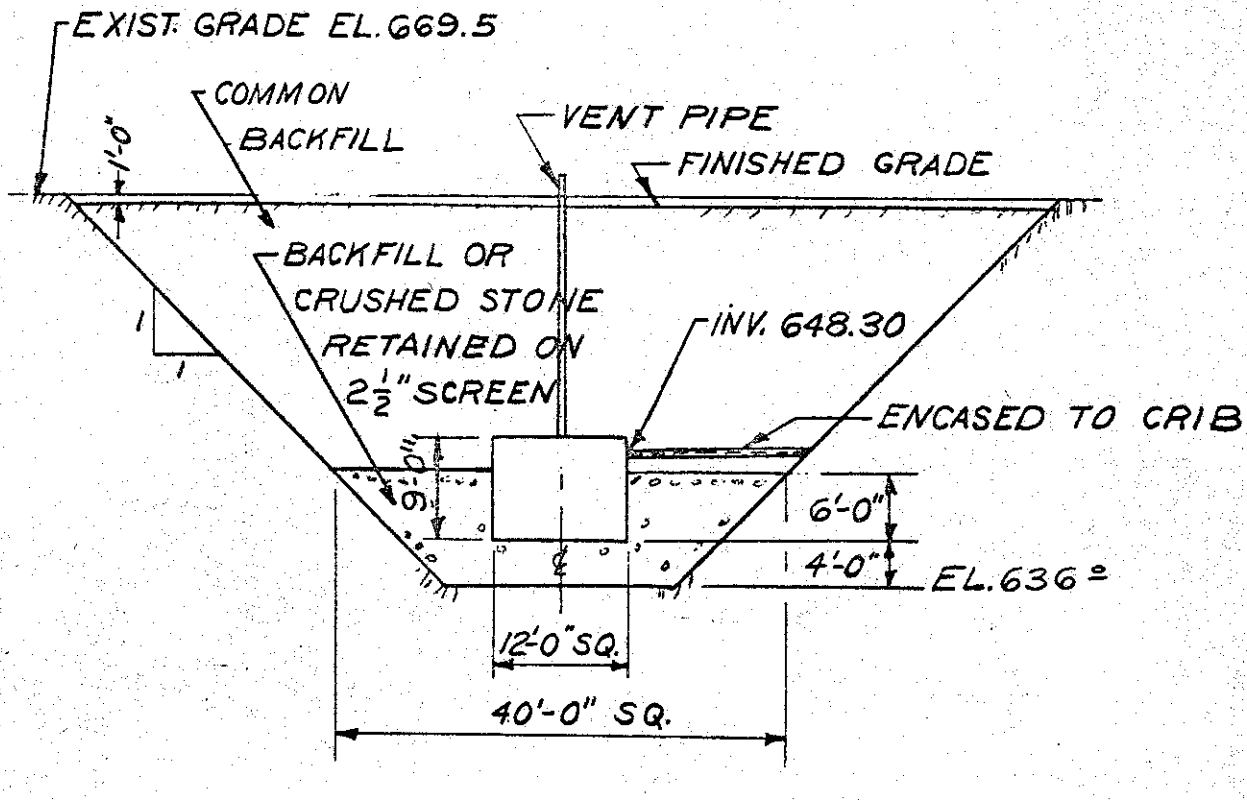


TAKEN FROM H-2-5385

276-S ORGANIC-SOLVENT MAKE-UP & 203-S DECONTAMINATED METAL STORAGE -CRIB & WASTE LINE- BLDG. 276-S & 203-S

216-S-13

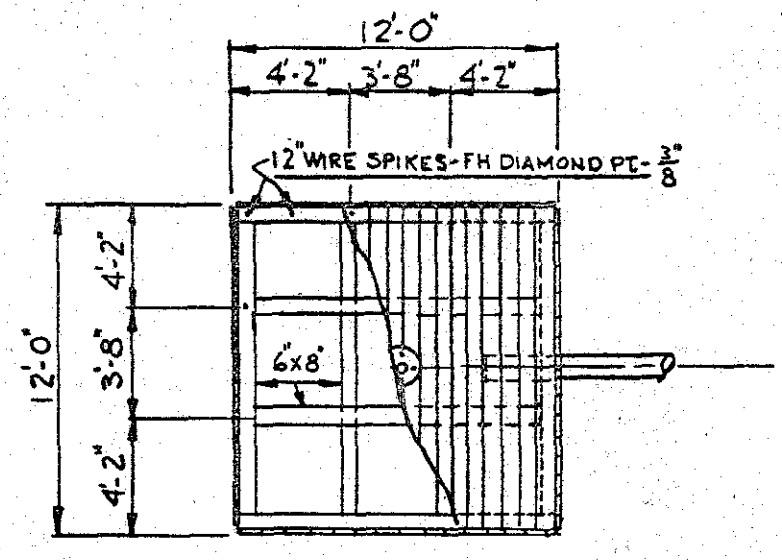


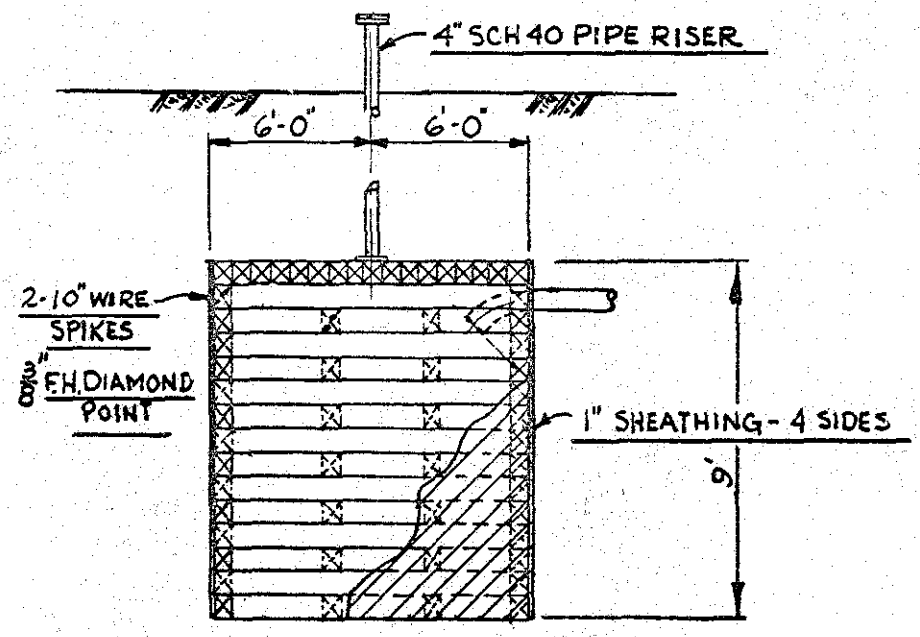


CRIB

TAKEN FROM H-2-5385

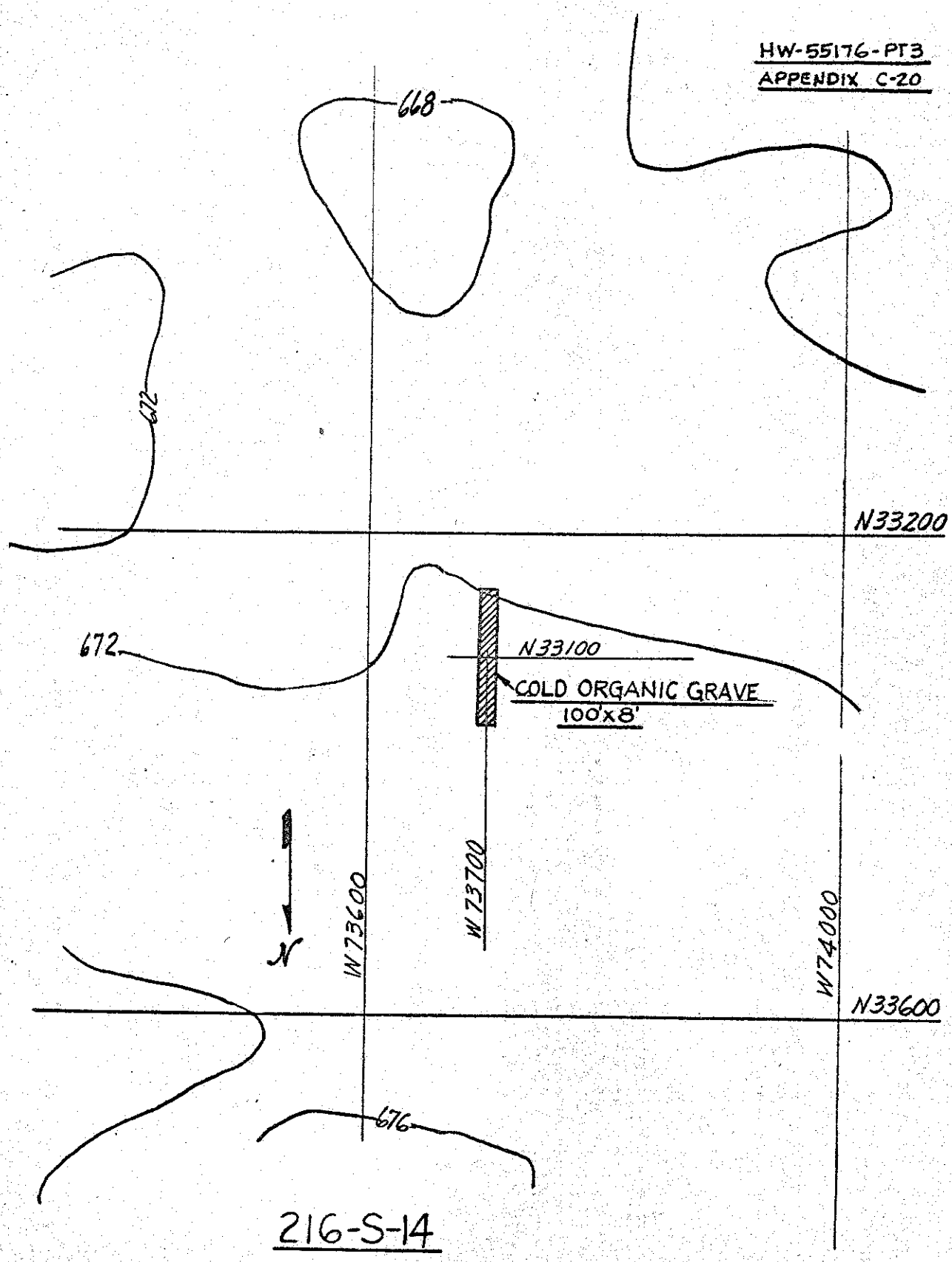
668
672
N33200
672
N33100
COLD ORGANIC GRAVE
100'x8'
N
W73600
W73700
W74000
N33600
676

216-S-14

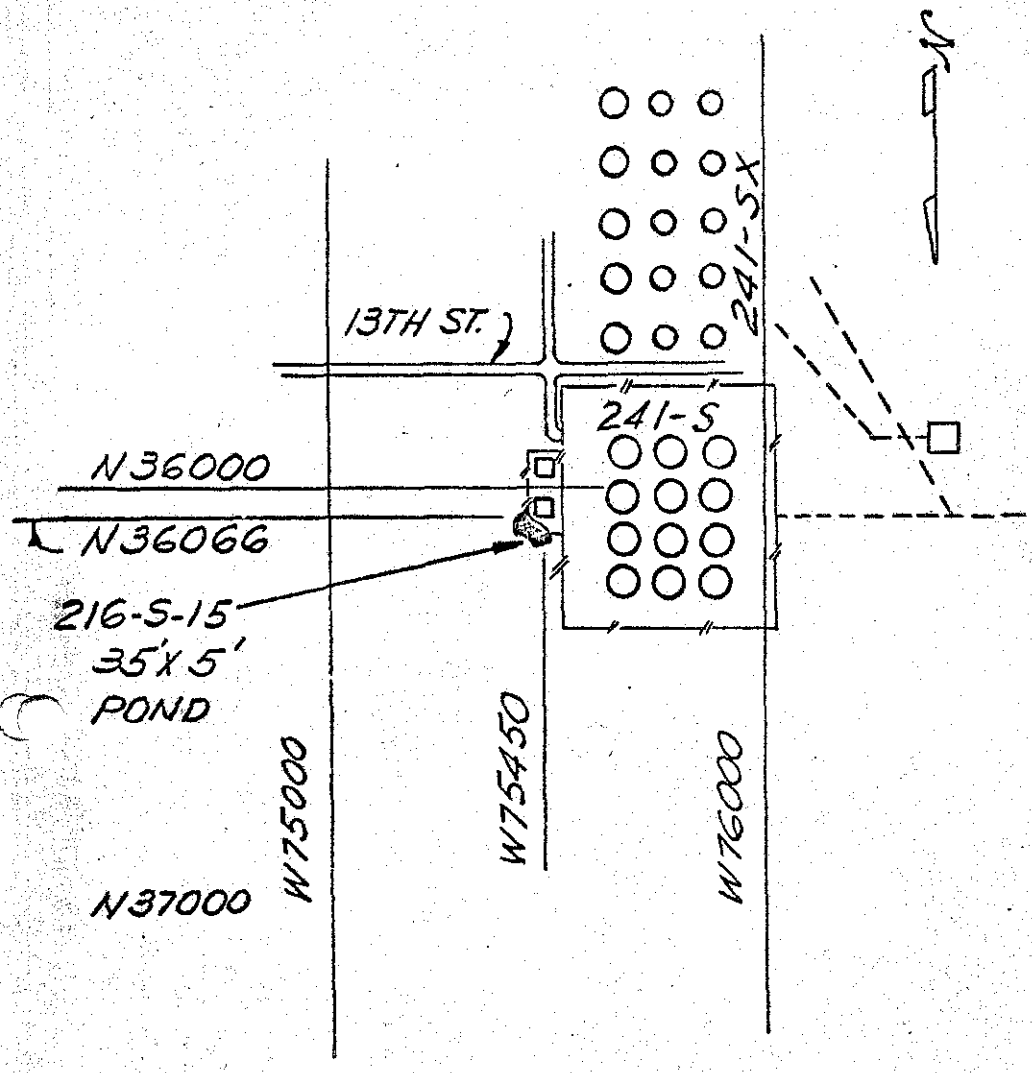


216-S-15
H-2-2430

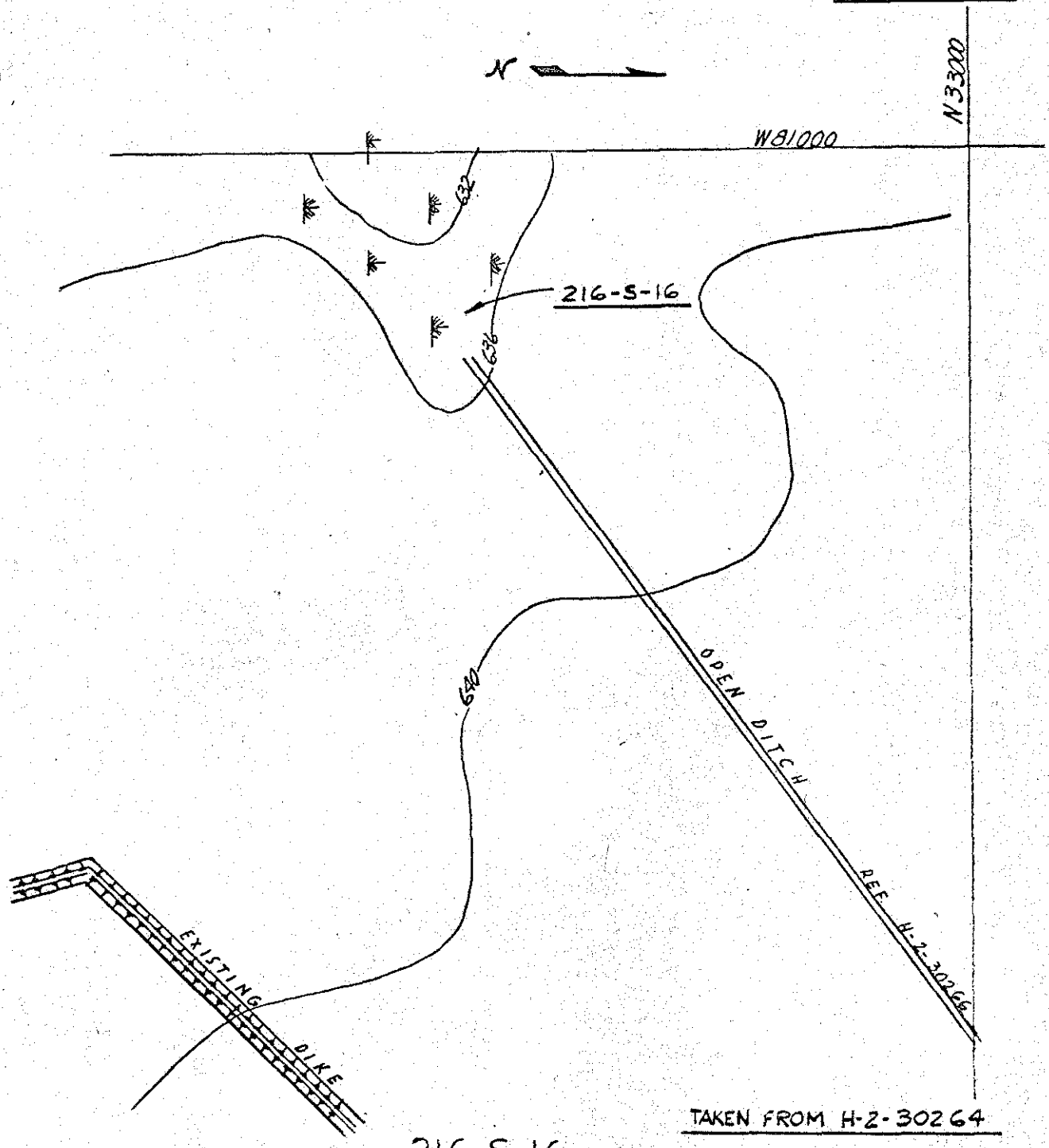


TAKEN FROM H-2-30264

216-S-16

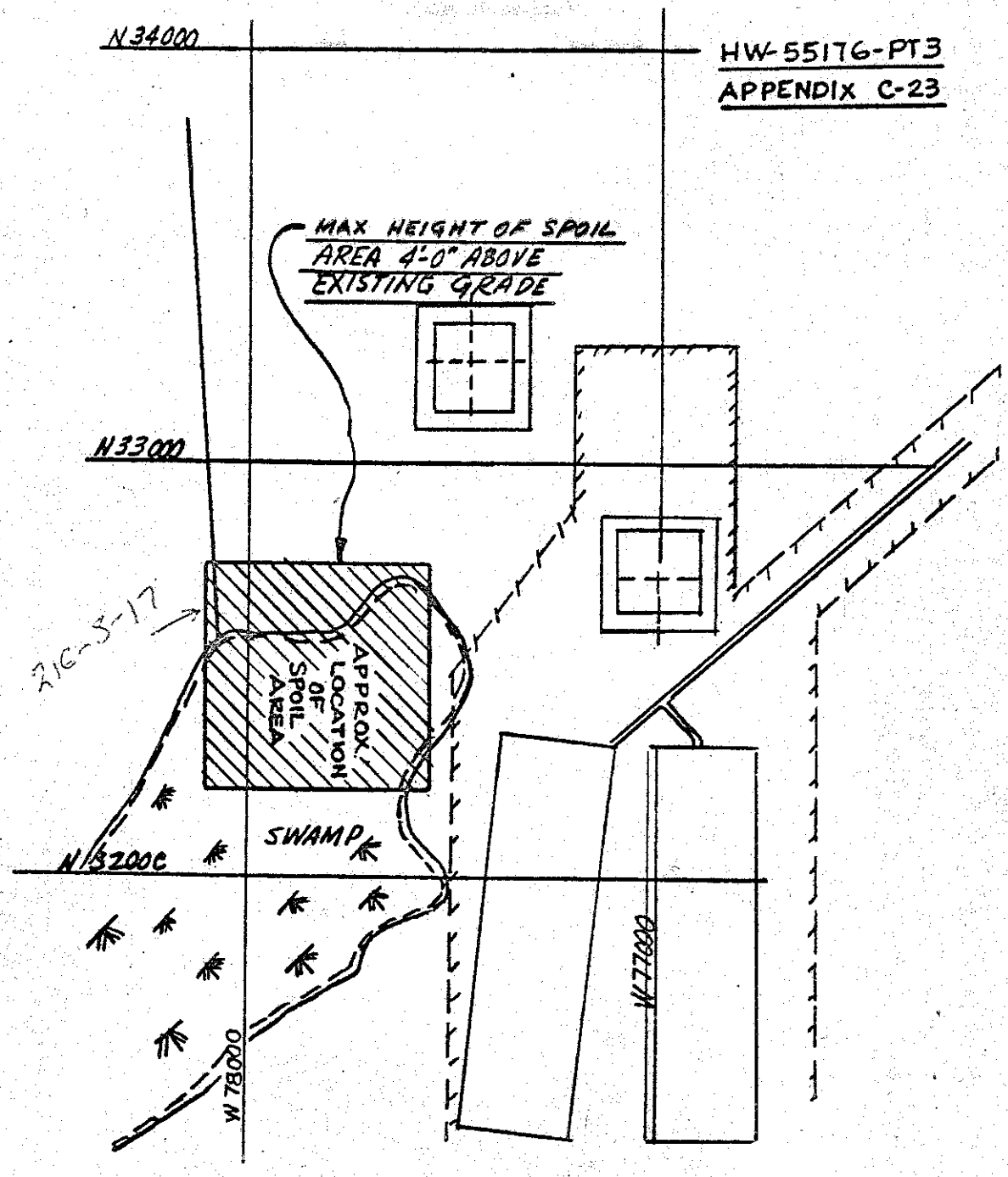


TAKEN FROM H-2-2594

216-S-17

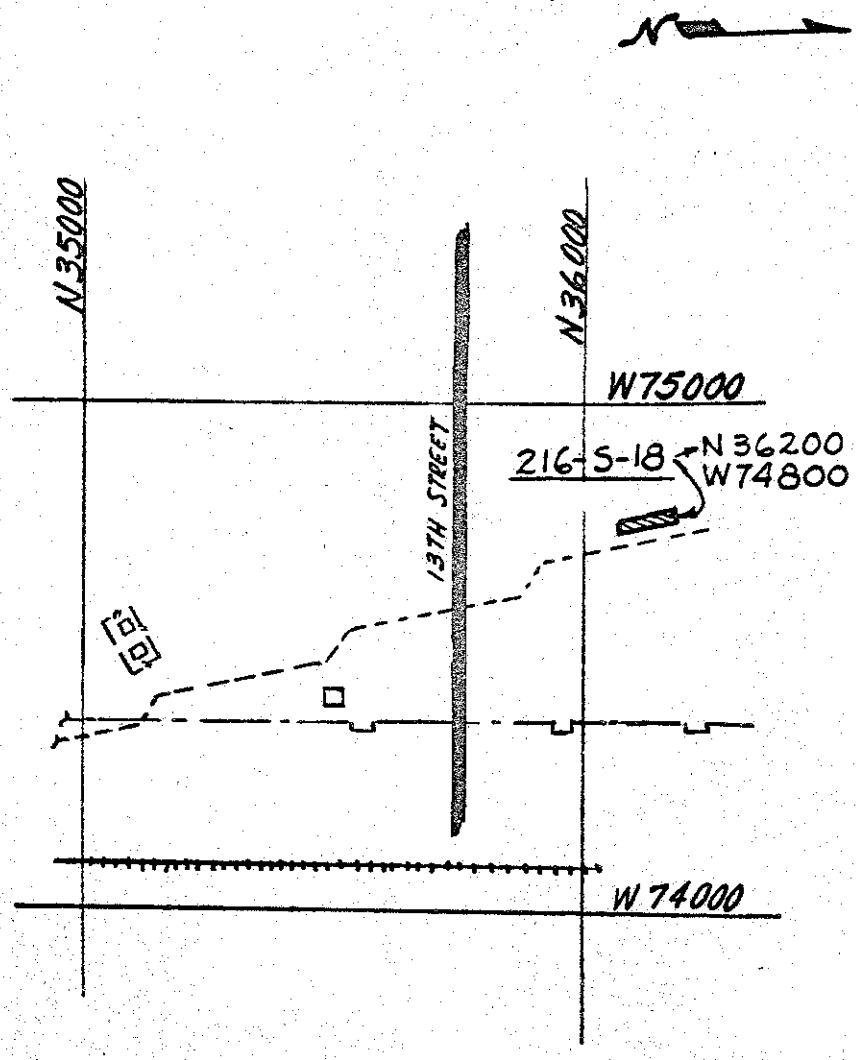


TAKEN FROM H-2-2430

216-S-18

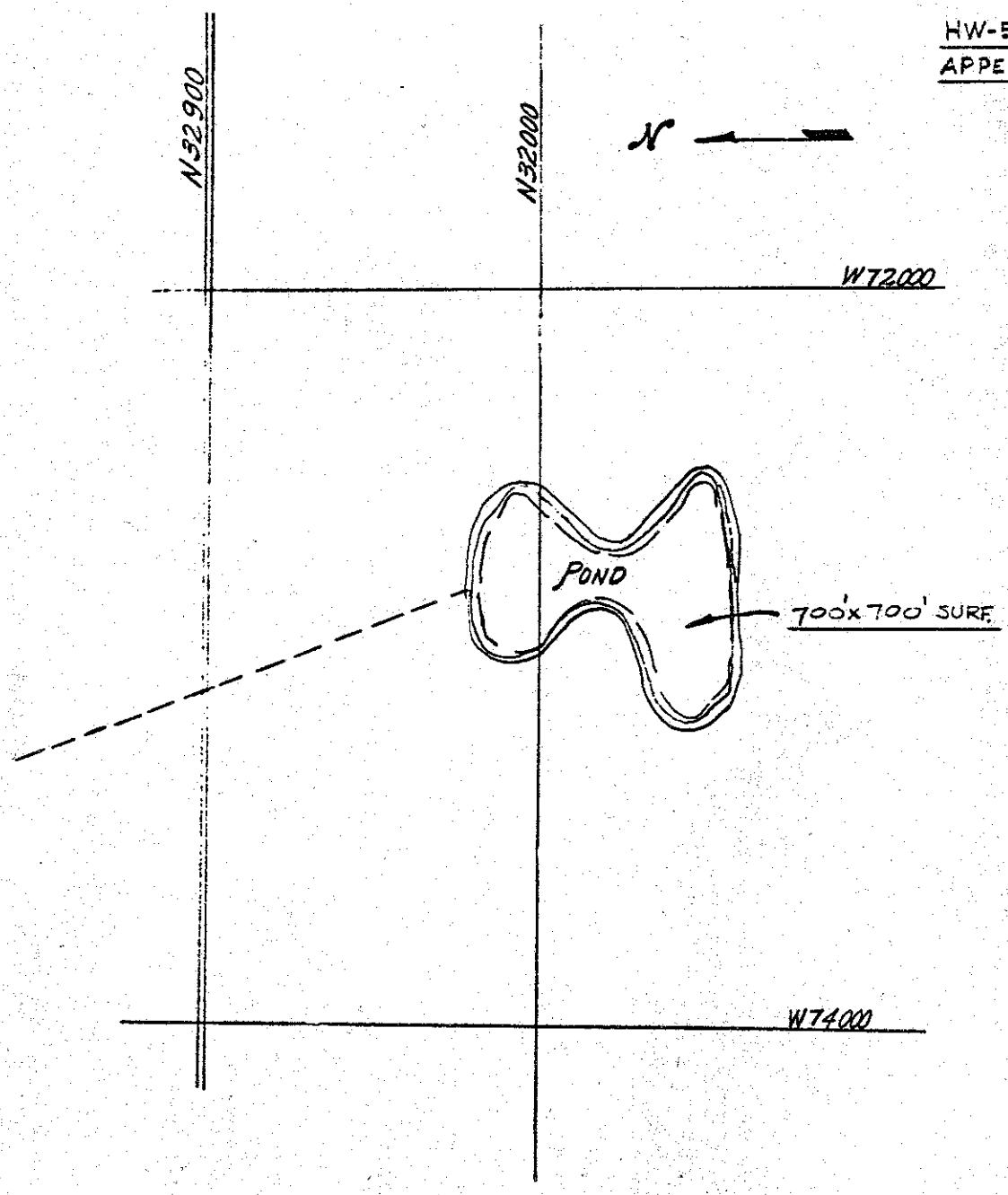


TAKEN FROM H-2-5101
M2892-SHT#27

216-S-19

HW-55176-PT3
APPENDIX C-26
DRAWN JLSIMEK 12/4/55

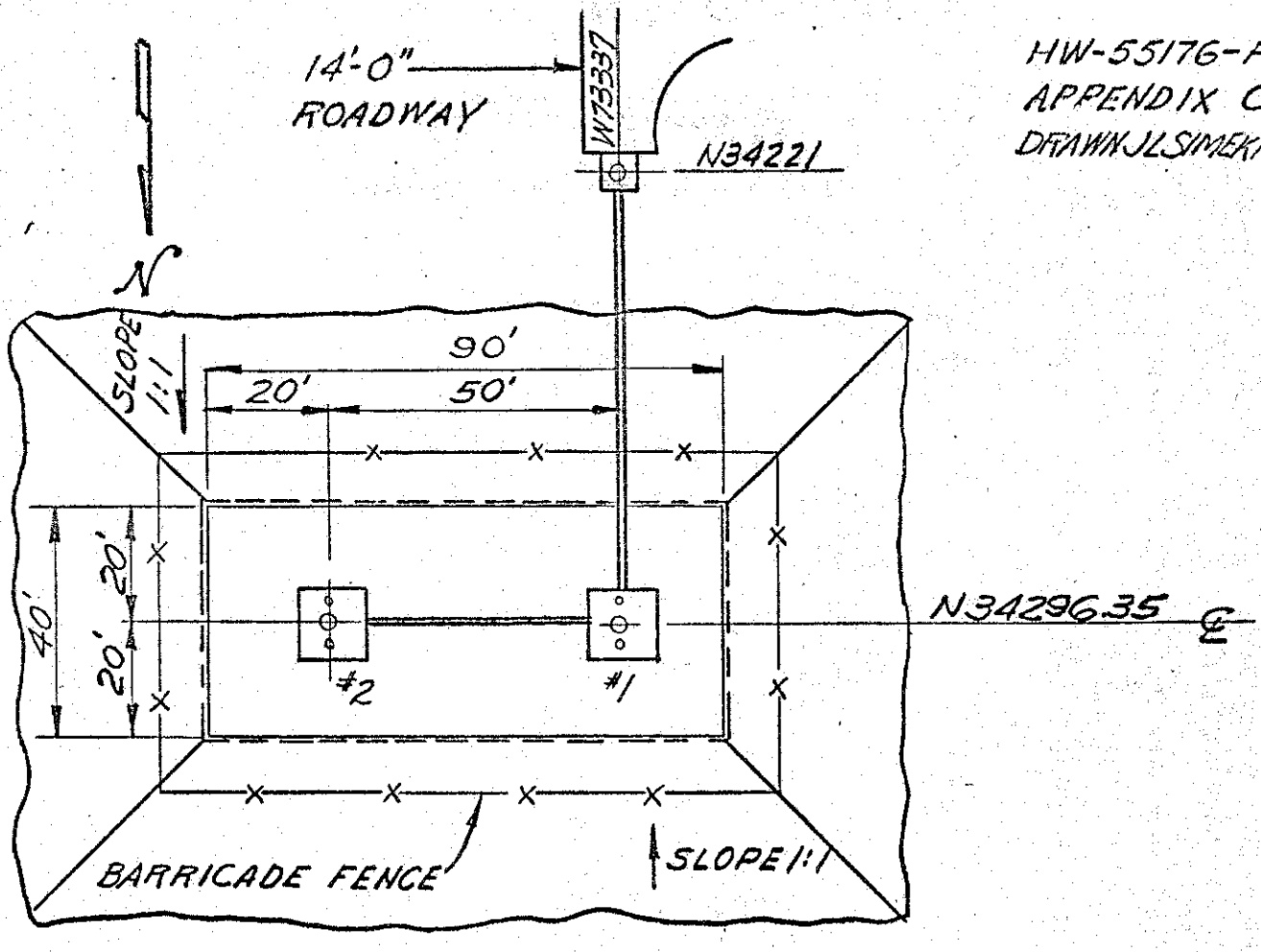


PLAN

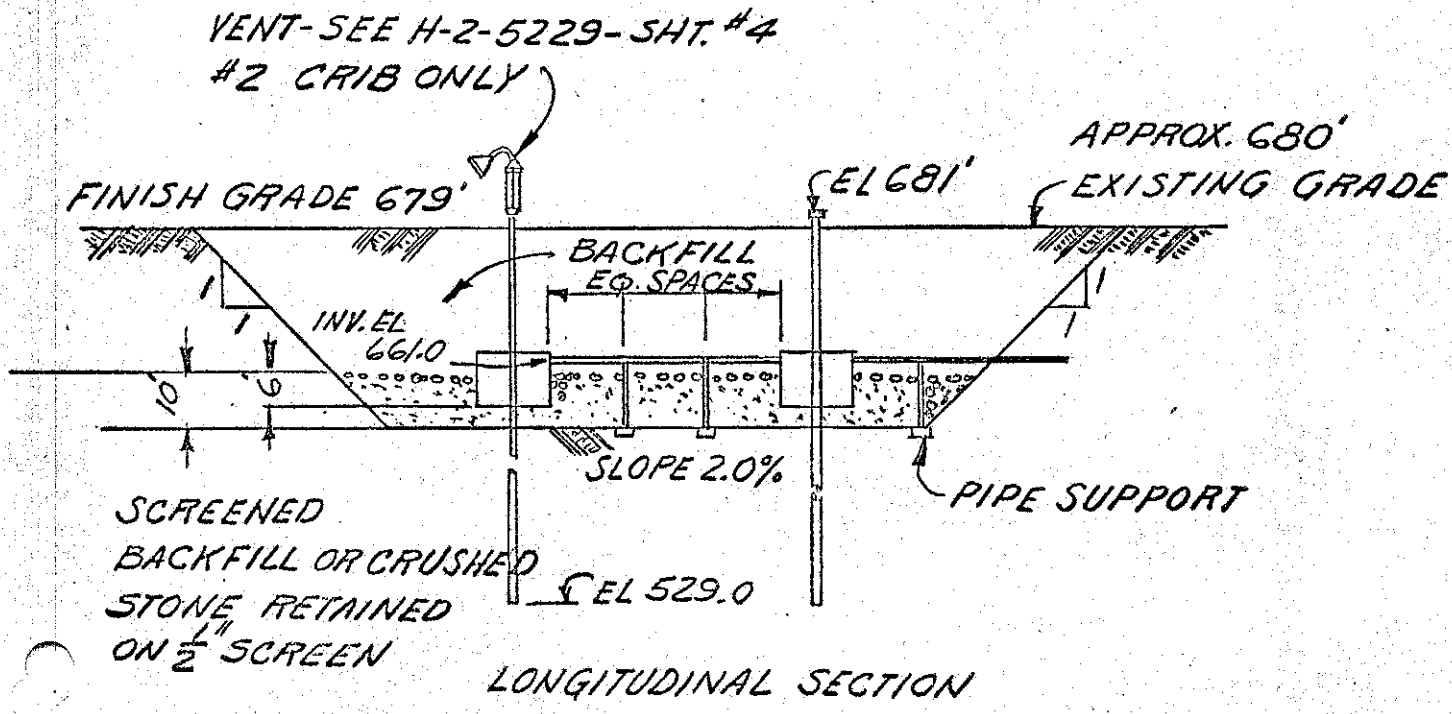


LONGITUDINAL SECTION

216-S-20

H-2-5229
H-2-5224

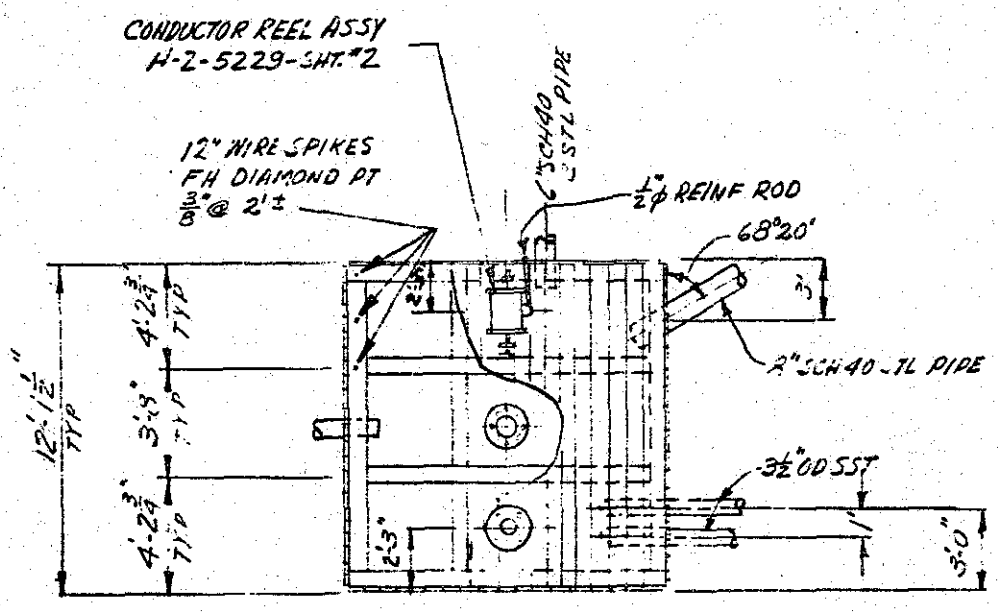


PLAN

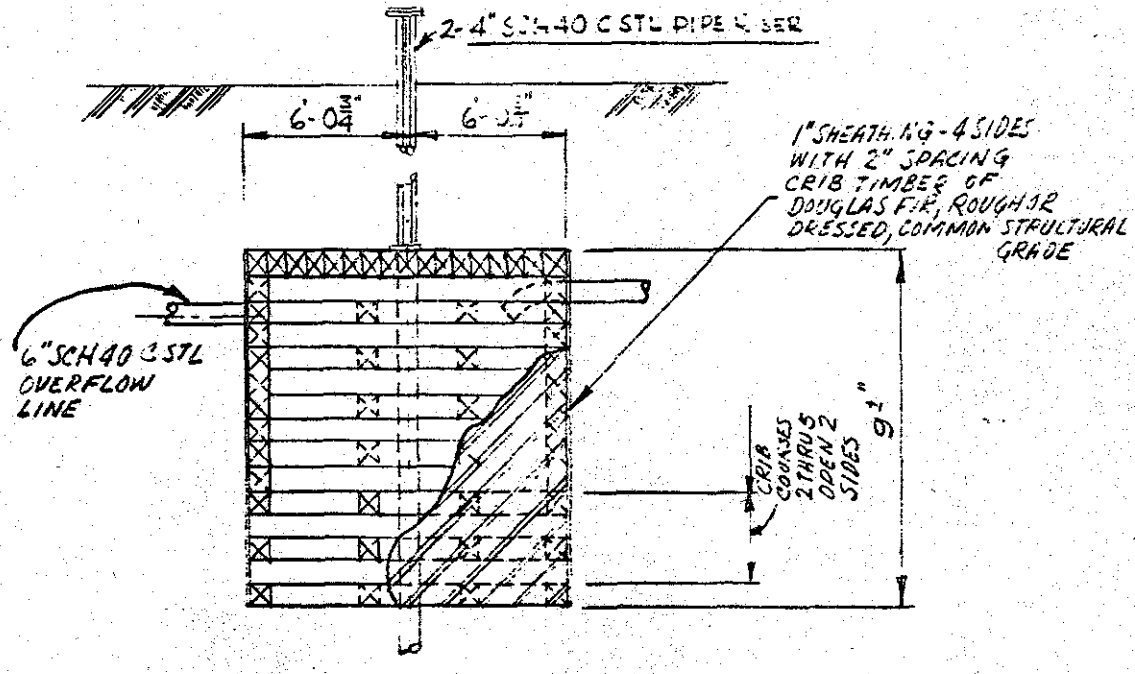


ELEVATION

TAKEN FROM H-2-5229

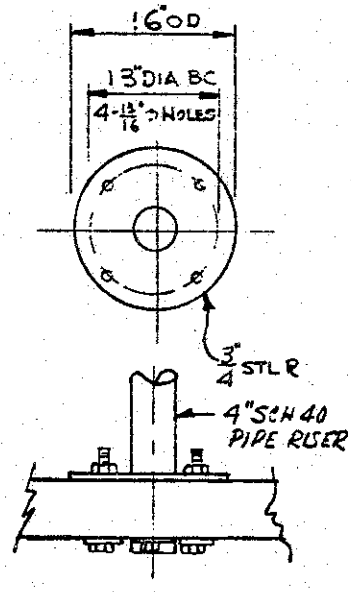


DETAIL
RING PLATE

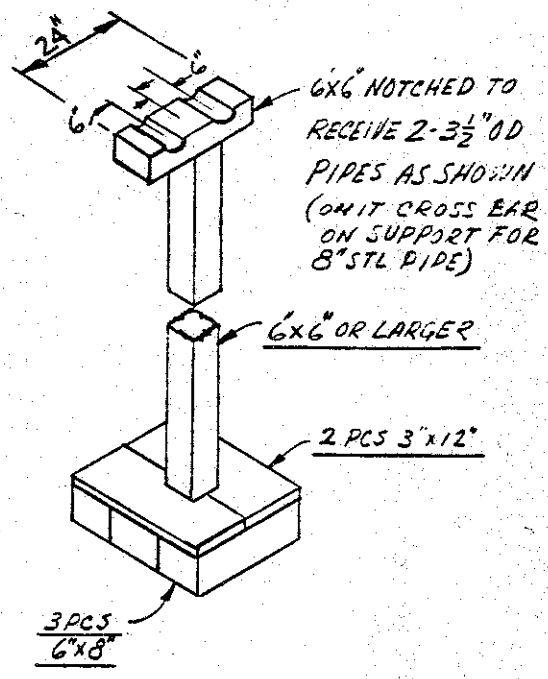


DETAIL
PIPE SUPPORT

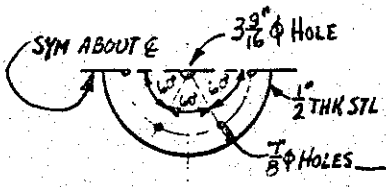


COVER ℞

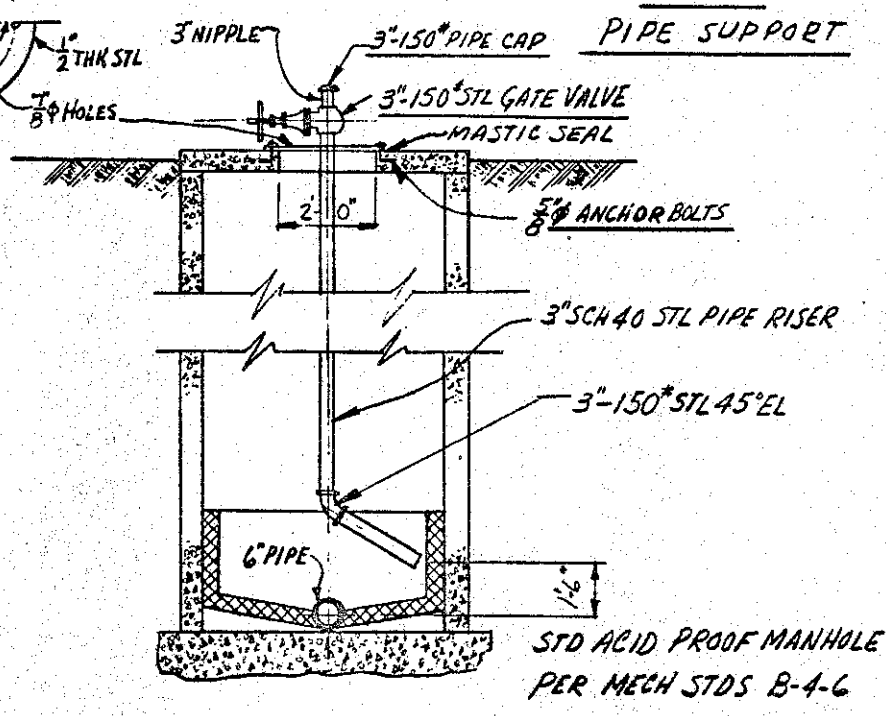


MANHOLE

TAKEN FROM H-2-[illegible]

216-S-20

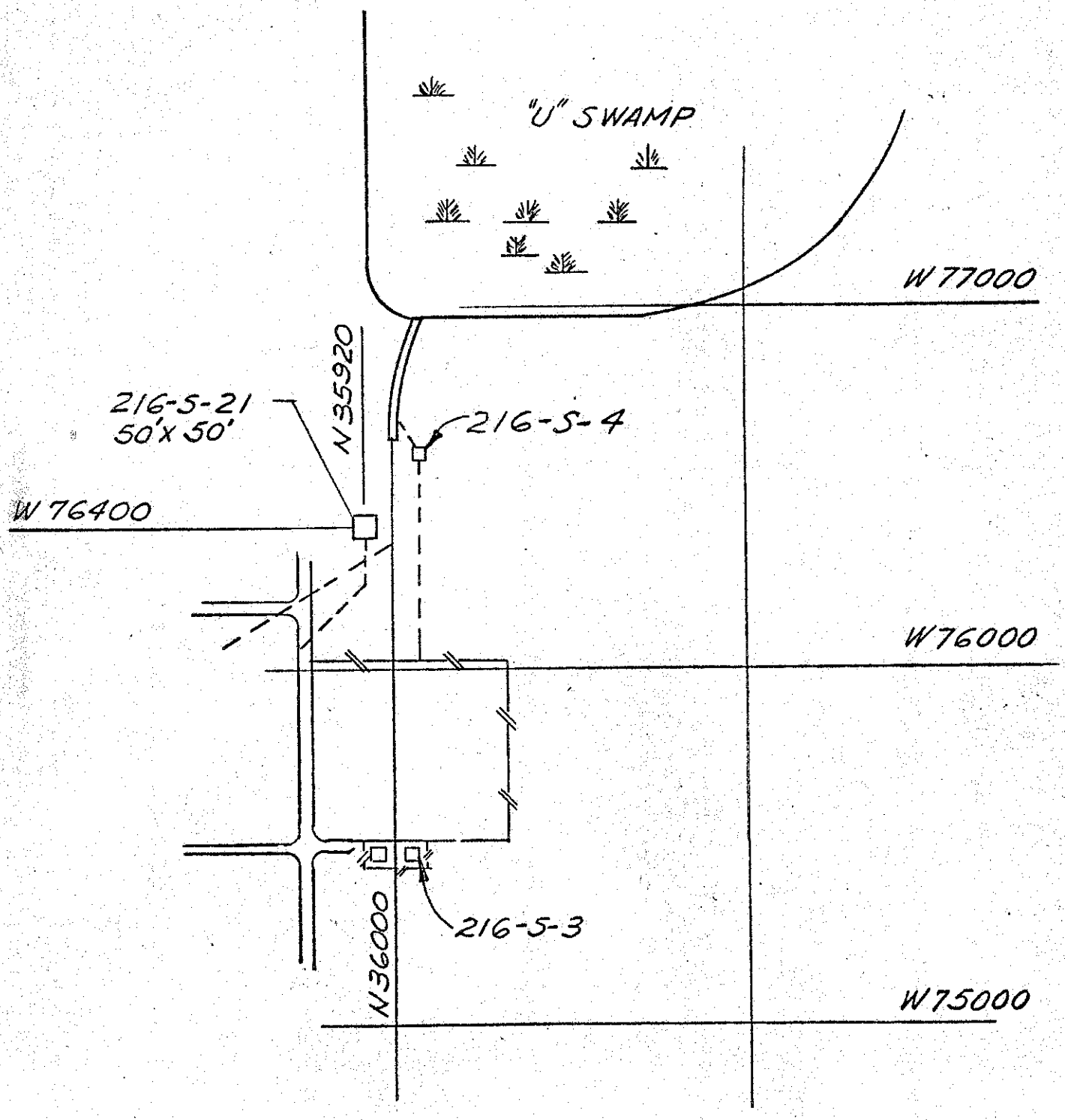


216-S-21
H-2-39579

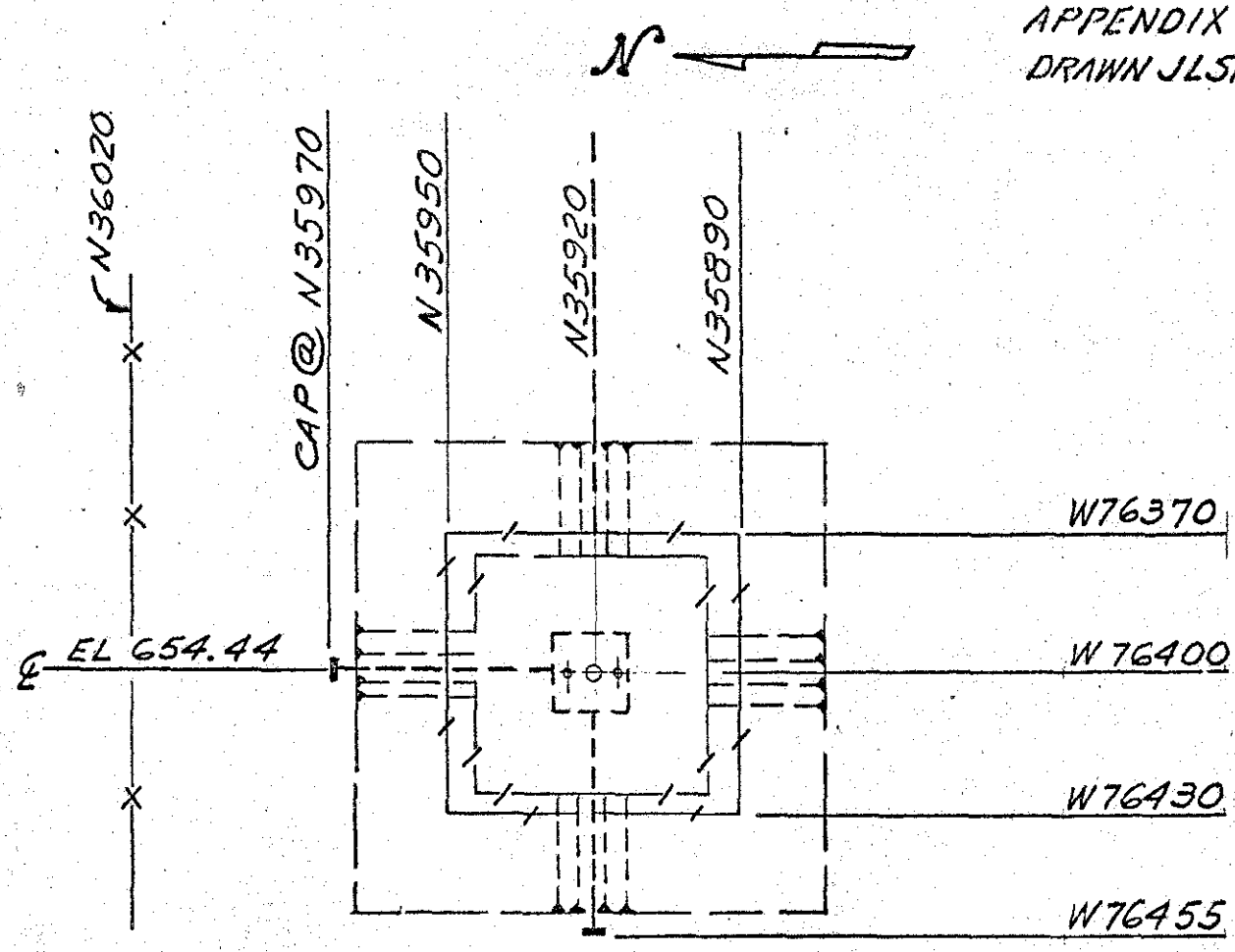


PLAN

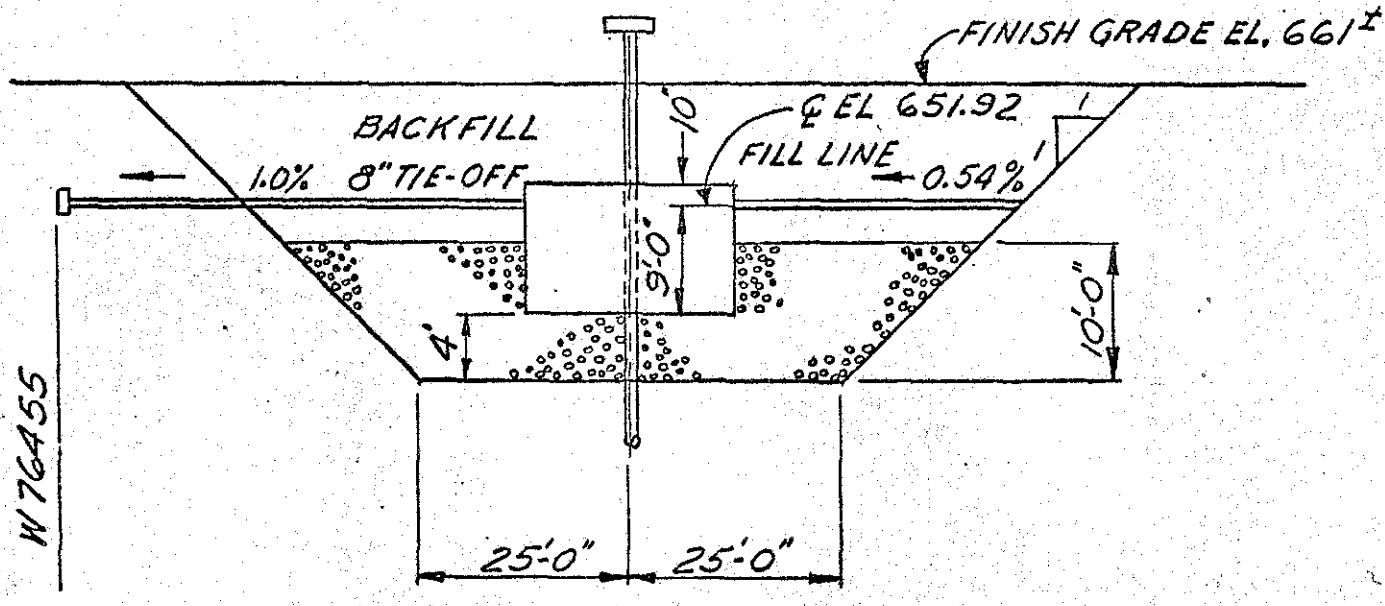


216-S-21
H-2-39509
SEE C-30a

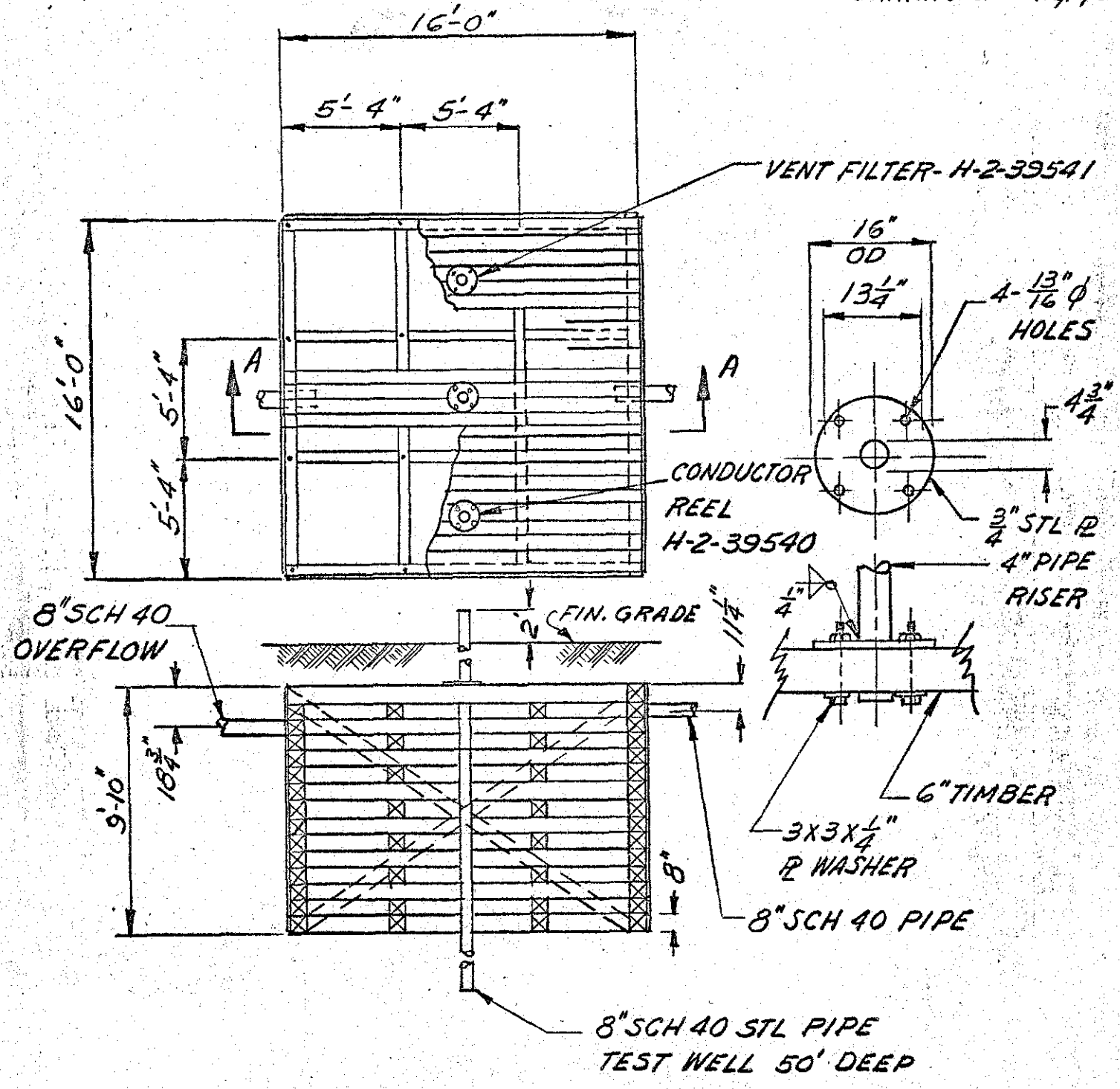


216-S-21
H-2-39549

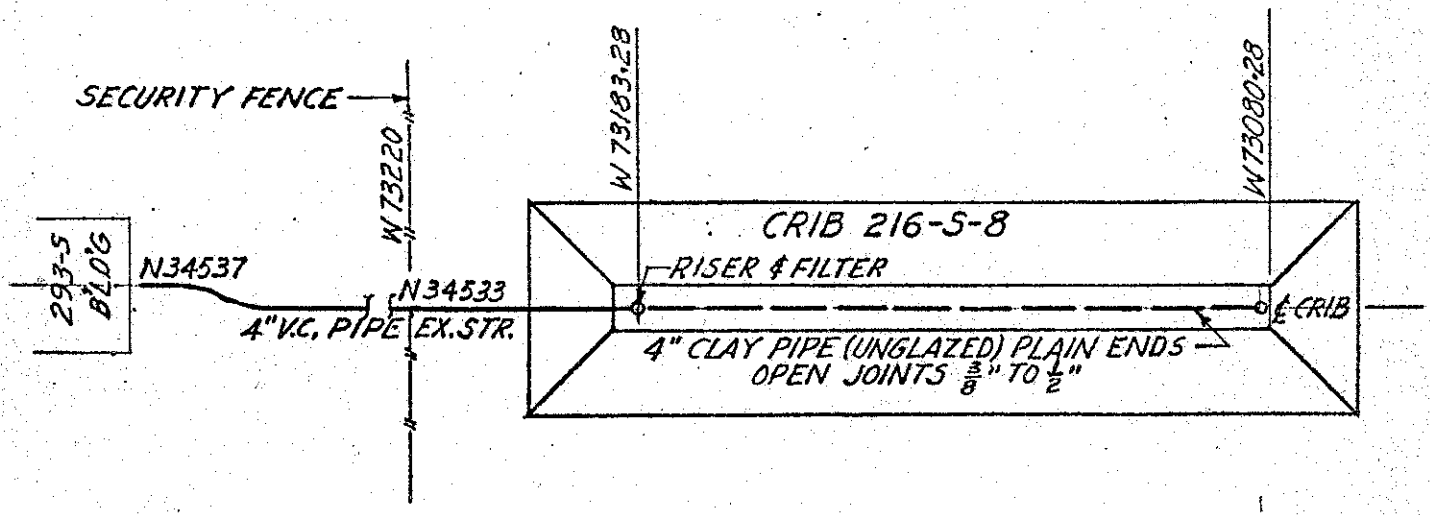


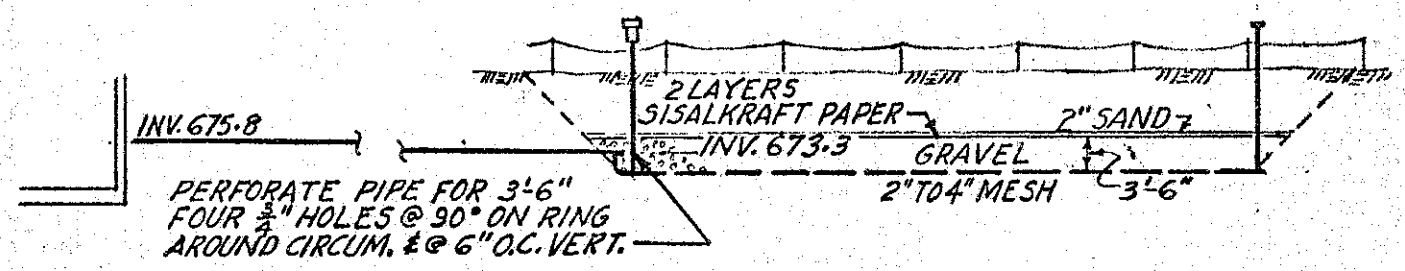

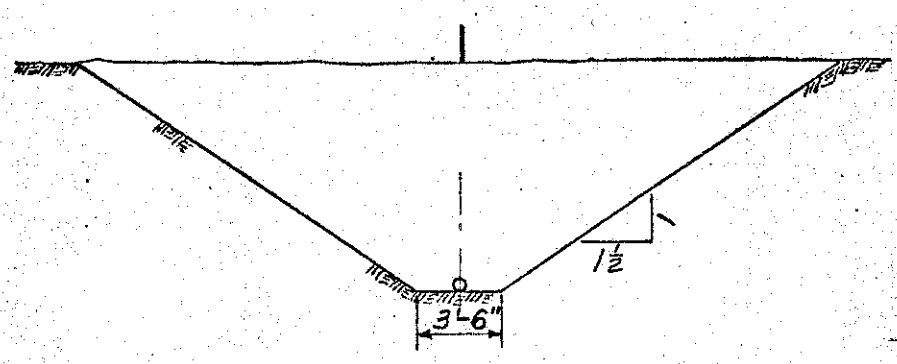


CRIB
TYPICAL CROSS SECTION
1/8" = 1'-0"

TAKEN FROM H-2-31047

216-S-22

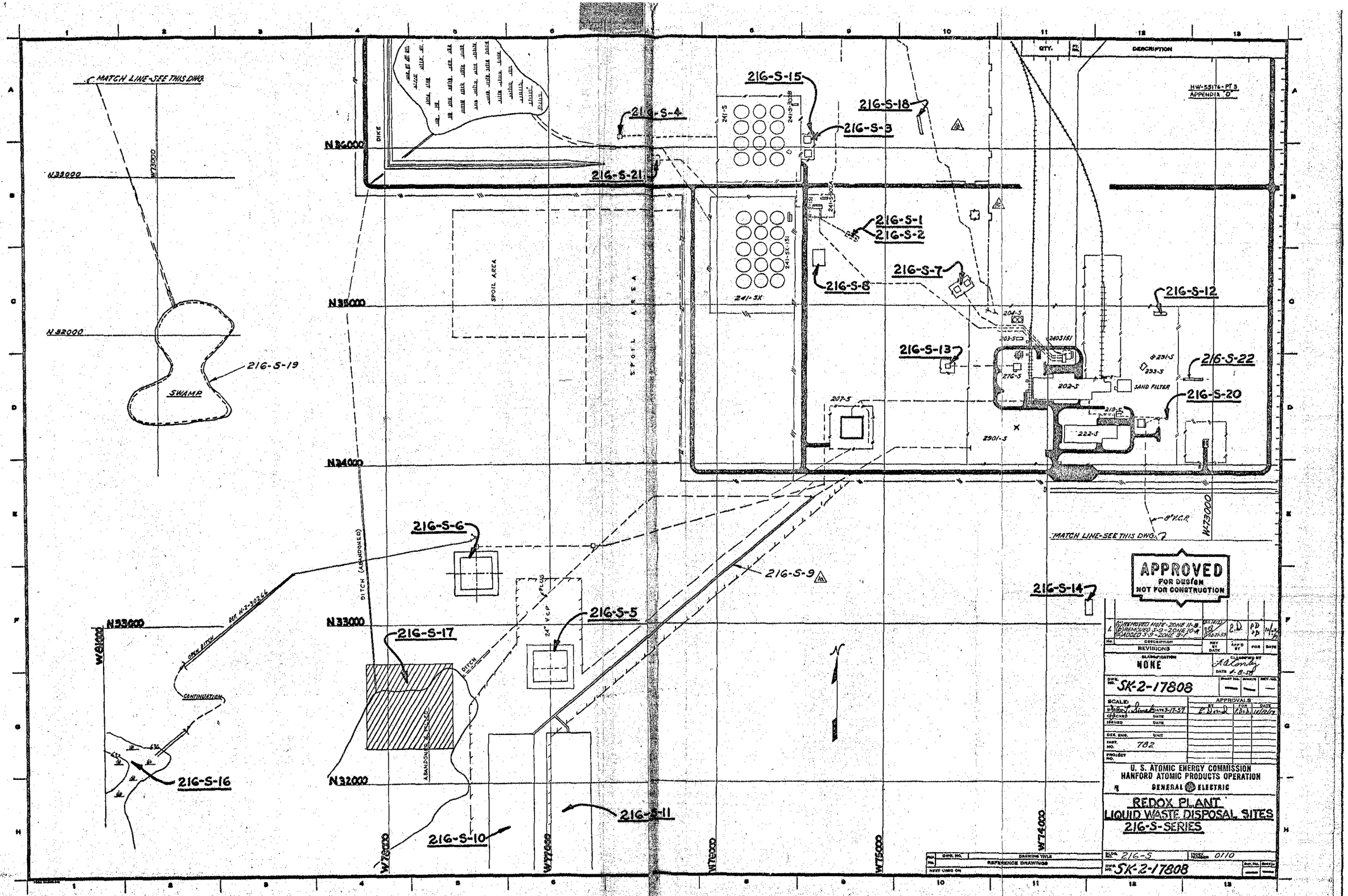
MATCH LINE-SEE THIS DWG.
N36000
N35000
N34000
N33000
N32000
W73000
W74000
W75000
W76000
W77000
W78000
216-S-1
216-S-2
216-S-3
216-S-4
216-S-5
216-S-6
216-S-7
216-S-8
216-S-9
216-S-10
216-S-11
216-S-12
216-S-13
216-S-14
216-S-15
216-S-16
216-S-17
216-S-18
216-S-19
216-S-20
216-S-21
216-S-22
SWAMP
SPOIL AREA
DIKE
241-S
241-SX
241-SX-151
241-S-301B
241-S-301
204-S
203-S
240S151
231-S
233-S
SAND FILTER
202-S
216-S
207-S
219-S
222-S
2901-S
8" V.C.P.
DITCH (ABANDONED)
24" V.C.P.
PLUG
DITCH
ABANDONED 8" V.C.P.
OPEN DITCH
REF. H-2-32244
CONTINUATION
HW-55176-PT 3
APPENDIX "O"
QTY.
DESCRIPTION
APPROVED
FOR DESIGN
NOT FOR CONSTRUCTION
REVISIONS
NONE
SK-2-17808
SCALE:
APPROVALS
782
U. S. ATOMIC ENERGY COMMISSION
HANFORD ATOMIC PRODUCTS OPERATION
GENERAL ELECTRIC
REDOX PLANT
LIQUID WASTE DISPOSAL SITES
216-S-SERIES
216-S
0110
SK-2-17808
DRAWING TITLE
REFERENCE DRAWINGS

U PLANT

UNCLASSIFIED
(CLASSIFICATION)

**GENERAL ELECTRIC**

HANFORD ATOMIC PRODUCTS OPERATION – RICHLAND, WASHINGTON

DOCUMENT NO.
HW-55176, Part IV

COPY NO.

DATE
April 29, 1958

ISSUING FILE

TITLE

INDEX OF CPD CRIB BUILDING NUMBERS
DESIGNS OF CPD RADIOACTIVE LIQUID WASTE
DISPOSAL SITES

AUTHOR

V. W. Wood

| ROUTE TO | PAYROLL NO. | LOCATION | FILES ROUTE DATE | SIGNATURE AND DATE |
|---|---|---|---|---|
| WA ~~Hanford~~ | | ~~325~~ | | ~~CHHanford 5/7/58~~ |

C-1899-MS (5 – 56)

UNCLASSIFIED
(CLASSIFICATION)

TO BE USED ON UNCLASSIFIED AND OFFICIAL USE ONLY DOCUMENTS

# INDEX OF CPD CRIB BUILDING NUMBERS DESIGNS OF CPD RADIOACTIVE LIQUID WASTE DISPOSAL SITES

## Part IV of VII Parts
## Process Technology - Study Report

by

V. W. Wood
Radiological Design and Development
Facilities Engineering Operation
CHEMICAL PROCESSING DEPARTMENT

April 29, 1958

D I S T R I B U T I O N

| | |
|---|---|
| CR Bergdahl | TG LaFollette |
| JM Bernard | CE Linderoth |
| WG Browne | WN Mobley |
| E Doud | HE Parker |
| J Durbin | HF Peterson |
| JB Fecht | DW Pearce |
| DR Gustavson | OH Pilkey |
| CT Groswith | EL Reed |
| WA Haney | RA Roberts |
| JF Honstead | HP Shaw |
| IM Jacques | ML Short |
| EB Jackson | VW Wood |
| CE Kent | 300 Files |

# INDEX OF CPD CRIB BUILDING NUMBERS DESIGNS OF CPD RADIOACTIVE LIQUID WASTE DISPOSAL SITES

## Part IV of VII Parts
## Process Technology - Study Report

## INTRODUCTION

During the fourteen years or more which the separations areas have operated, many sites have been used for the disposal of radioactive liquid wastes. Various methods have been used in assigning building numbers to these sites and, in a number of cases, changes have been made which have brought about some confusion. One of the reasons being some currently used building numbers do not agree with the numbers existing on design prints for the facilities. Reference (2) was an effort to establish a listing of the liquid waste disposal sites. It required considerable time and research to locate information concerning these sites.

Many varied designs have been used for the disposal of radioactive liquid wastes. Reverse wells, trenches, cribs or caverns, etc., have been used. Specific information on these facilities is often difficult to obtain for in some instances they were constructed on work orders with no records being retained on the design. In general, the design on each facility has been different. This has made it extremely difficult for people to have a good working knowledge of the various waste disposal sites.

## PURPOSE

The purpose of this report (Part IV) is to provide a ready reference to the "U" Plant liquid waste disposal sites as well as a compilation of sketches showing the basic information on the design of each facility.

Another objective is to establish a simplified and uniform numbering system. Still another objective is to provide an up-to-date tabulation. Subsequent parts of this report will provide information on cribs for other areas.

## SUMMARY AND CONCLUSIONS

All radioactive liquid waste disposal sites should have the 216 Building number designation. These should be further grouped by giving all such sites for Purex a prefix of 216-A. Other major series would be 216-S for Redox; 216-T for "T" Plant; 216-B for "B" Plant; 216-U for "U" Plant and 216-Z for "Z" Plant.

The numbering list in "Official Hanford Works Building List - Specification HW-5000" by Engineering Files - Construction Engineering Operation should be revised to more closely follow the above numbering system.

RECOMMENDATIONS

It is recommended that the following action be taken:

1. All groups and services referring to the "U" Area cribs or report data concerning them should use the index numbering system as presented in this report. In the case of U Plant this means several changes. See cross reference, page 4.

2. That all drawings concerning these disposal sites, including maps, be revised to show the proper locations and numbers for these cribs.

3. Any suggestions for improving the usefulness of this report should be referred to the author.

DISCUSSION

When all seven parts of the report are completed, and the work outlined in the report is completed, much confusion will be eliminated and more people will be better informed on the design of each waste disposal facility. The report will provide a firm basis for future building number assignments.

While some sincere efforts have been made to try and keep a methodical system for recording waste disposal sites, a number of problems have developed, for example, HW-5000, Sheet 29 of 50, lists only eight cribs in the 216-S series. Also reference 2 has assigned numbers which do not agree with the crib numbers assigned on many drawings.

As indicated earlier, the use of the crib index, as presented in this report should be very easy. In addition, information is presented which is very difficult to locate in the records and in some cases it is not available in the records.

REFERENCES

1. HW-5000, "Official Hanford Works Building List - Specification HW-5000" by Engineering Files - Construction Engineering Operation.

2. HW-43121. "Tabulation of Radioactive Liquid Waste Disposal Facilities by HV Clukey dated May 10, 1956.

3. HW-33305, "Tabulation of Radioactive Liquid Waste Disposal Facilities" by HV Clukey dated October 8, 1954.

4. HW-41535, "Uncoffined Underground Radioactive Waste and Contamination in the 200 Areas" by KR Heid dated January 17, 1956.

## CROSS REFERENCE
## "U" AREA RADIOACTIVE LIQUID WASTE DISPOSAL SITES

| Suggested Crib No. | Number Listed in HW-5000 | Number Listed in HW-43121 | Number Used On Drawings or Original Number | Remarks |
|---|---|---|---|---|
| 216-U-1 | 216-U-1 | 216-U-3 | 216-U-1 | 361-WR |
| 216-U-2 | 216-U-2 | 216-U-3 ~~216-U-3~~ | 216-U-2 | |
| 216-U-3 | None | 216-U-11 | 216-U-3 | |
| 216-U-4 | None | 216-U-3 | 222-U-10 | Reverse Well |
| 216-U-5 | None | 216-U-4 | 221-U-#2 | Grave |
| 216-U-6 | None | 216-U-5 | 221-U-#1 | Grave |
| 216-U-7 | None | 216-U-7 | None | French Drain |
| 216-U-8 | 216-WR 1&2 | 216-U-9 | 216-WR-1,2,3 | |
| 216-U-9 | None | 216-U-6 | None | Ditch Abandoned |
| 216-U-10 | None | 216-U-1 | None | U Swamp |
| 216-U-11 | None | 216-U-12 | None | Ditch |
| | None | 216-U-10 | 216-T-17 | Changed to T Series See Part V |

## APPENDIX

A. Explanation of Parts to the Report

Part I will cover the Purex Radioactive Liquid Waste Disposal Sites.

Part II will cover the "Z" Plant Radioactive Liquid Waste Disposal Sites.

Part III will cover the Redox Plant Radioactive Liquid Waste Disposal Sites.

Part IV will cover the "U" Plant Radioactive Liquid Waste Disposal Sites.

Part V will cover the "T" Plant Radioactive Liquid Waste Disposal Sites.

Part VI will cover the "B" Plant Radioactive Liquid Waste Disposal Sites.

Part VII will cover the "C" Plant, Hot Semi-Works, the 200 North Areas and miscellaneous.

B. Index for "U" Plant Radioactive Liquid Waste Disposal Sites.

C. Sketches of "U" Plant Waste Disposal Facilities.

D. Map of "U" Plant Sites. (SK-2-17815).

# CRIB INDEX

## U Plant

| Number | Description Appendix Sheet | Service | Use Date From | Use Date To | Status |
|---|---|---|---|---|---|
| 216-U-1 | C-1 | 224-U Wastes | 3/52 | - | Abandoned |
| 216-U-2 | C-1 | Overflow from U-1 | 3/52 | - | Abandoned |
| 216-U-3 | C-2 | 241-U TK 110 Condensate | 5/54 | 1959 | Abandoned |
| 216-U-4 | C-3 & 4 | 222 U Waste | 3/47 | 1959 | Abandoned |
| 216-U-5 | C-5 | Startup Wastes | 1952 | | Abandoned |
| 216-U-6 | C-5 | Startup Wastes | 1952 | | Abandoned |
| 216-U-7 | C-6 | Blower Pit Drain | 6/53 | - | Inactive |
| 216-U-8 | C-7 & 8 | Process Condensate & Stack Drain | 6/52 | - | Active |
| 216-U-9 | C-9 | Cooling Water & Chemical | 3/52 | 3/54 | Abandoned |
| 216-U-10 | C-10 | Cooling Water & Chemical | 3/52 | - | Active |
| 216-U-11 | C-11 & 12 | Overflow from U-10 | 3/52 | - | Active |
| 216-U-12 | C-13 | Process Condensate & Stack Drain | Not used | | Replacement for U-8 |
| 216-U-13 | None | 241-UR Steam Cleaning Pit | 1952 | - | Inactive |
| 216-U-14 | None | Laundry Bldg. Ditch to U Swamp | 1953 | - | Active |

HW-55176-PART4
APPENDIX C-1
DRAWN JLSIMEK 12/14/59

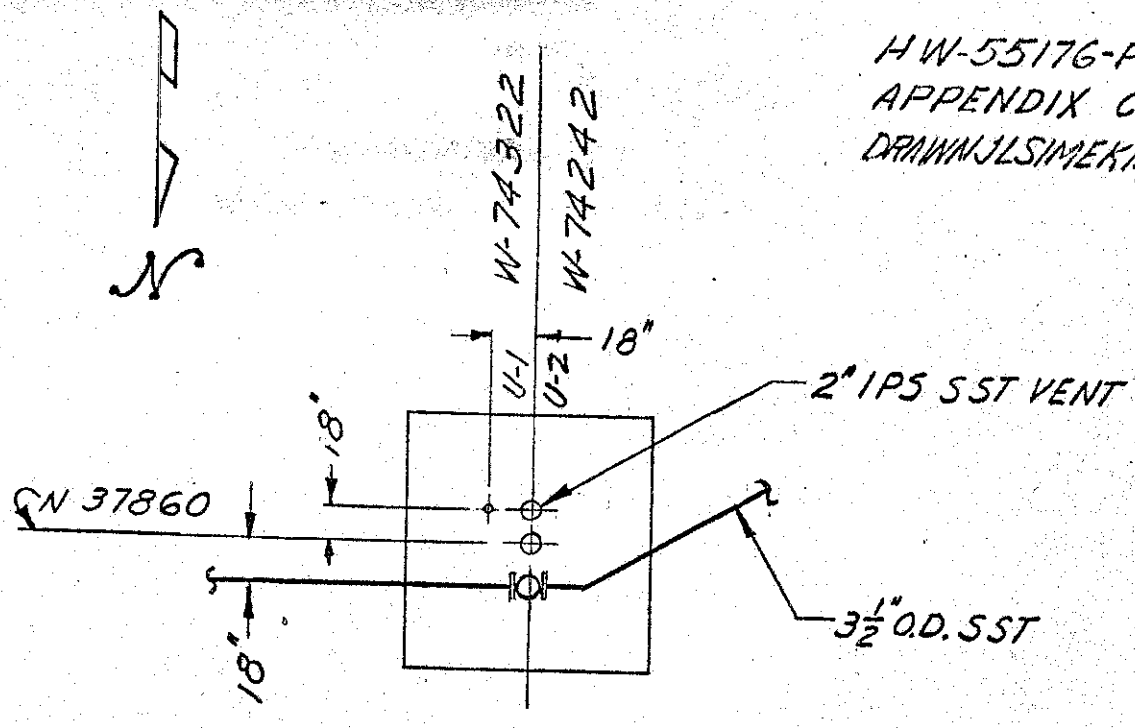


PLAN

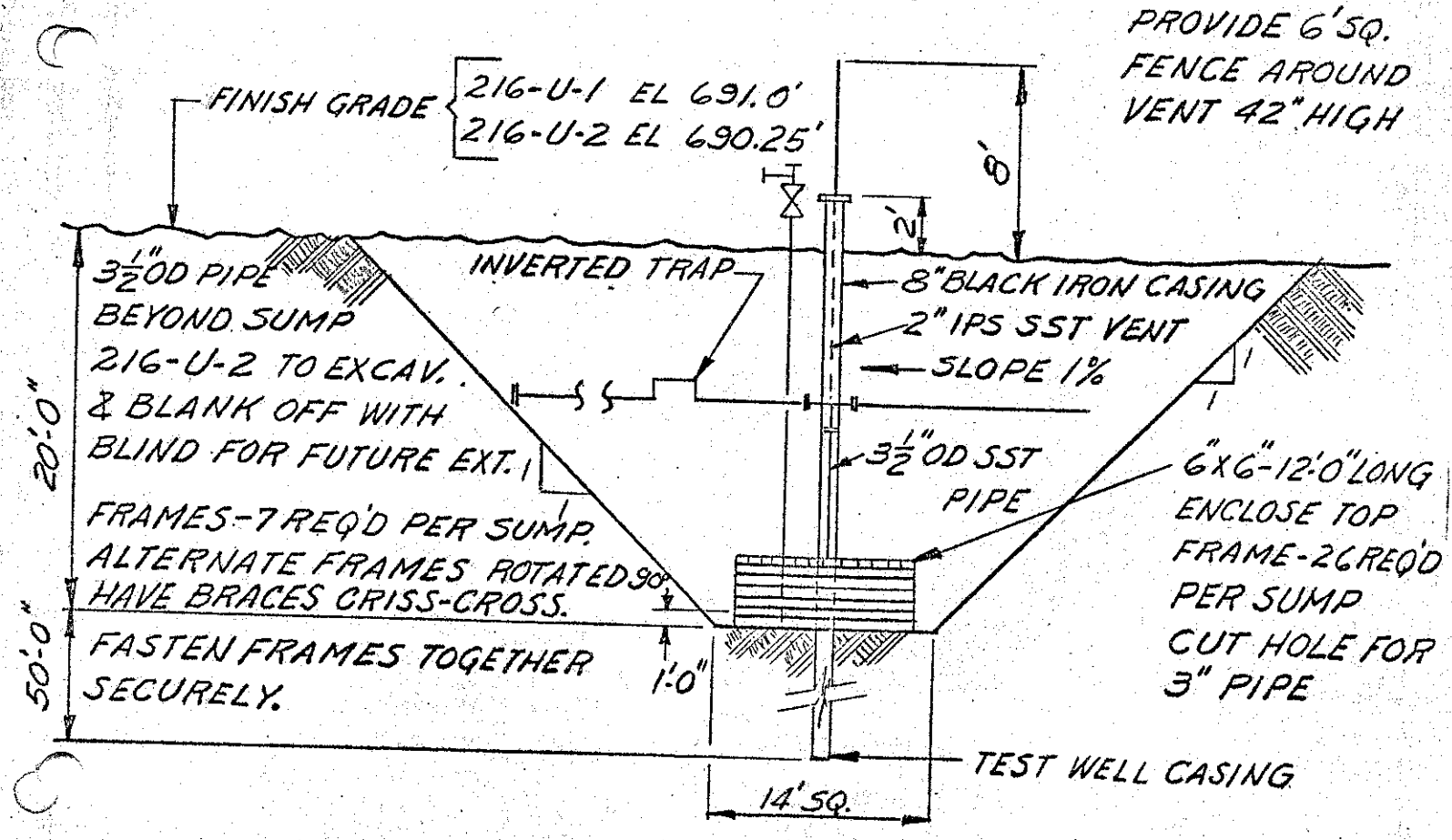


216-U-1
216-U-2

2

H-2-50061 H-2-2430

HW-55176-PART 4
APPENDIX C-2
DRAWN JLSIMEK 12/14/5

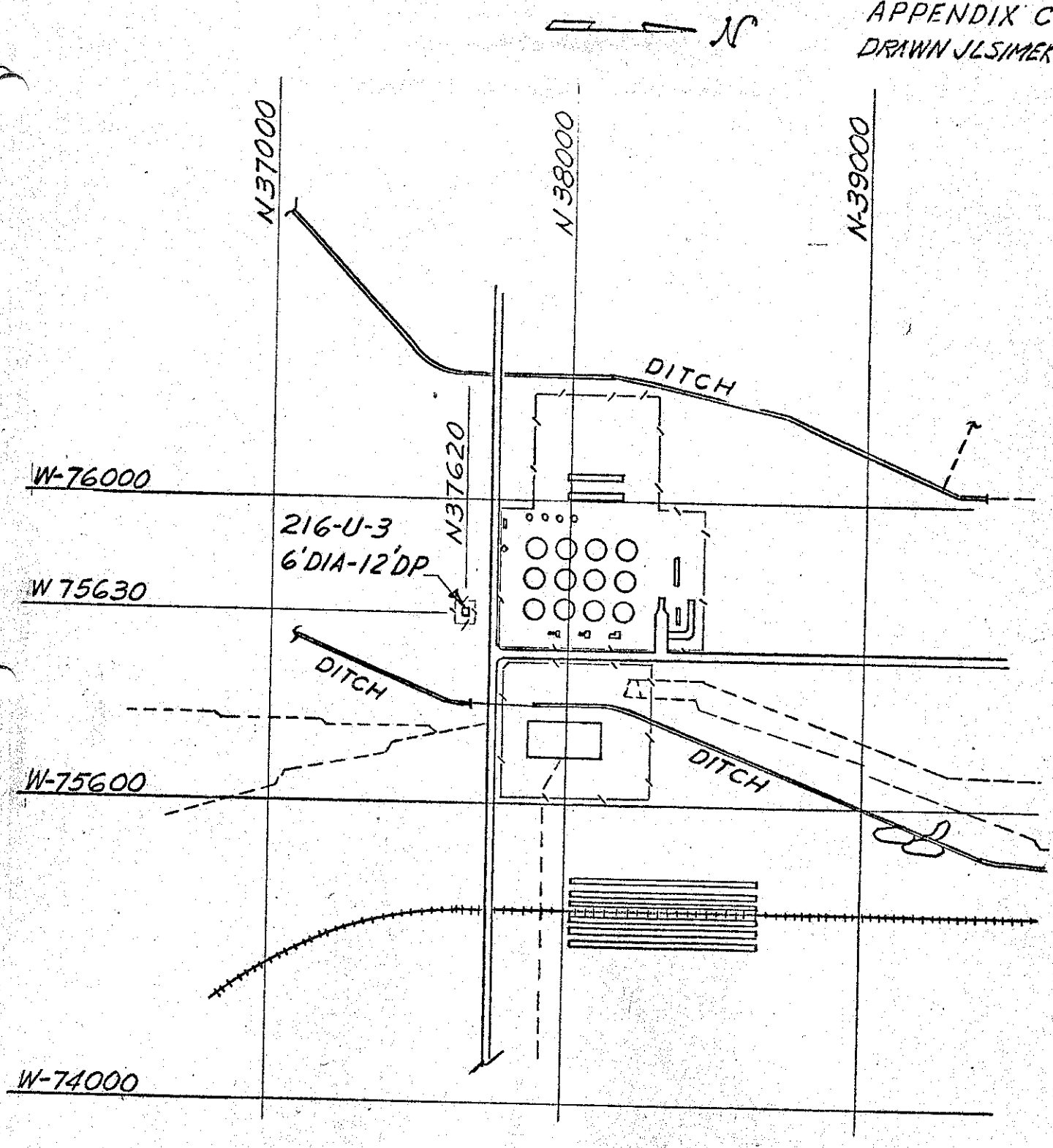


216-U-3
H-2-44004

3

HW-55176-PART 4
APPENDIX C-3
DRAWN JLSIMEK 12/14/55

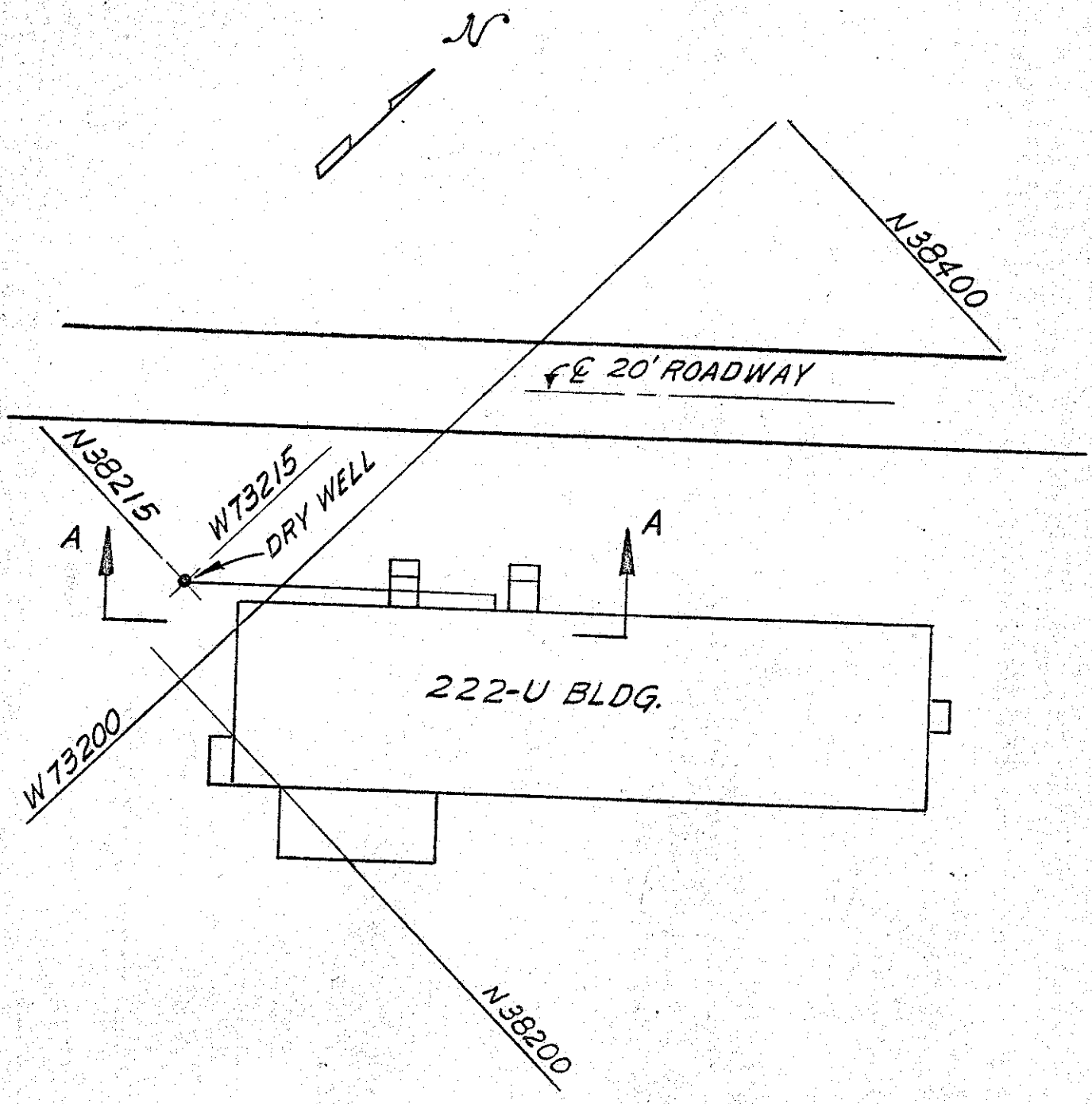


216-U-4
H-2-43081
HW-69870-SHT 2
SEE C-4

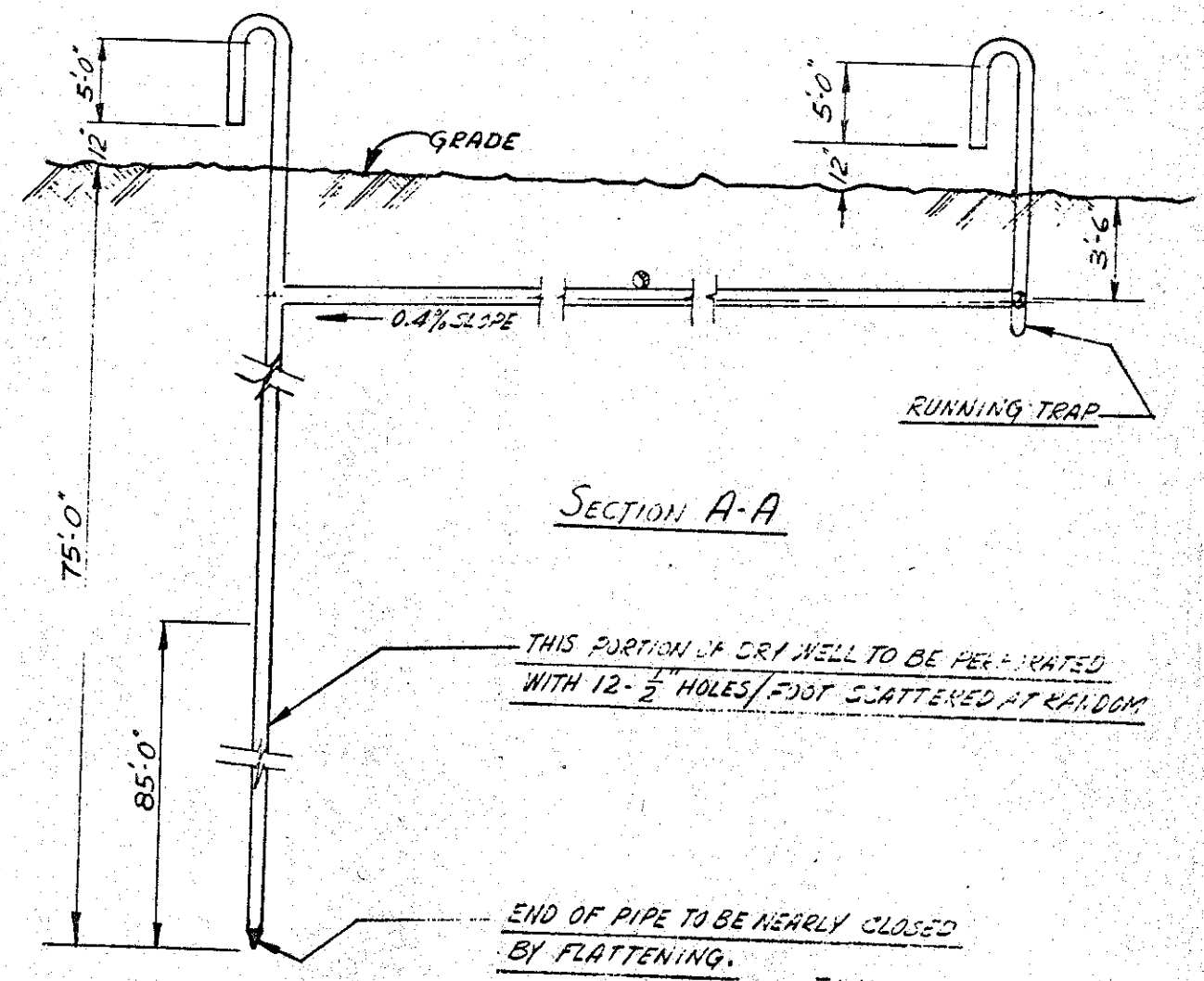


TAKEN FROM
H-2-43081
HW 69870 SHT 2

216-U-4

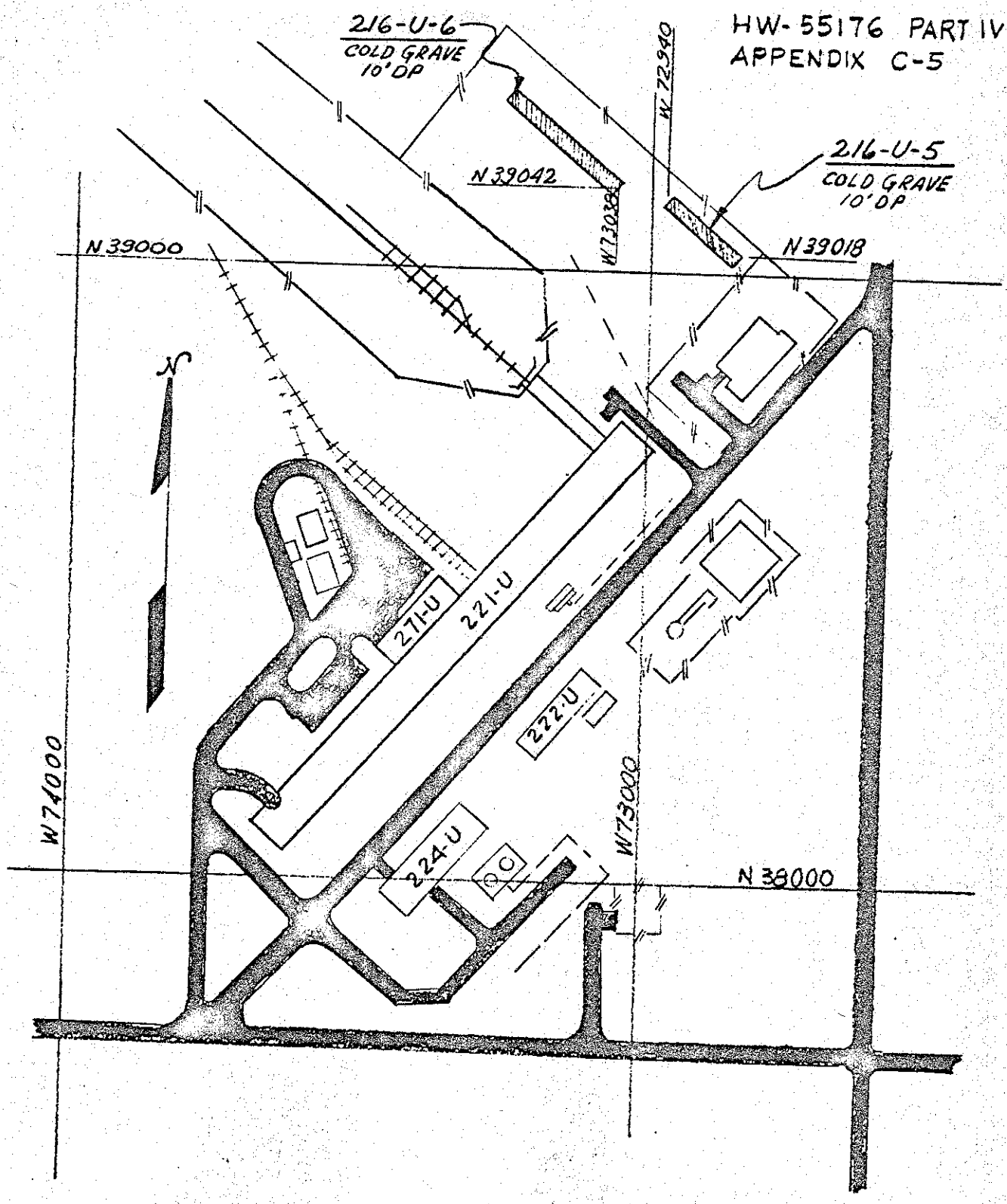


216-U-5
216-U-6

TAKEN FROM M2600W SH 19

HW-55176-PART 4
APPENDIX C-6
DRAWN J.L. SIMEK 12/14/59

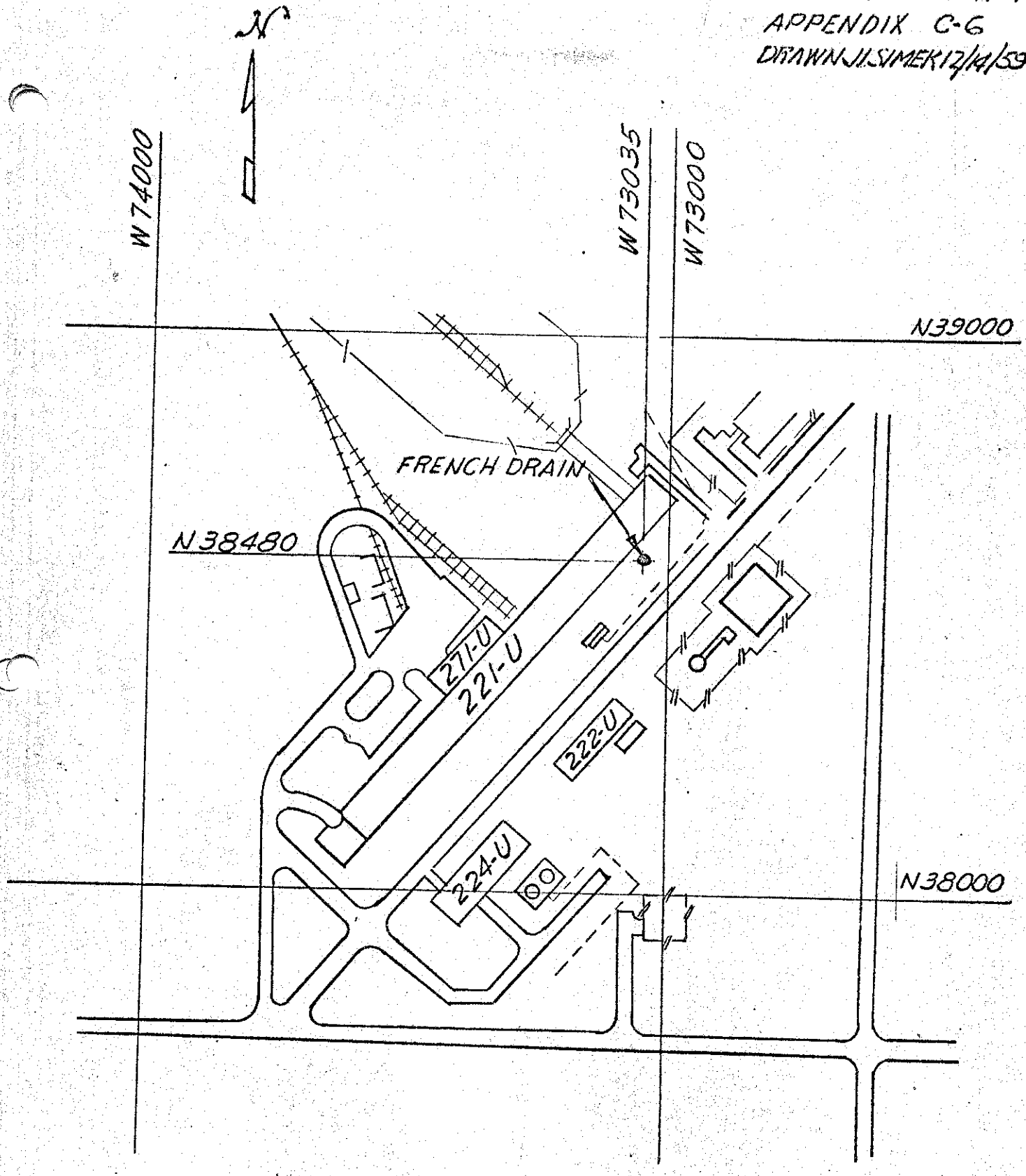


216-U-7
H-2-43039

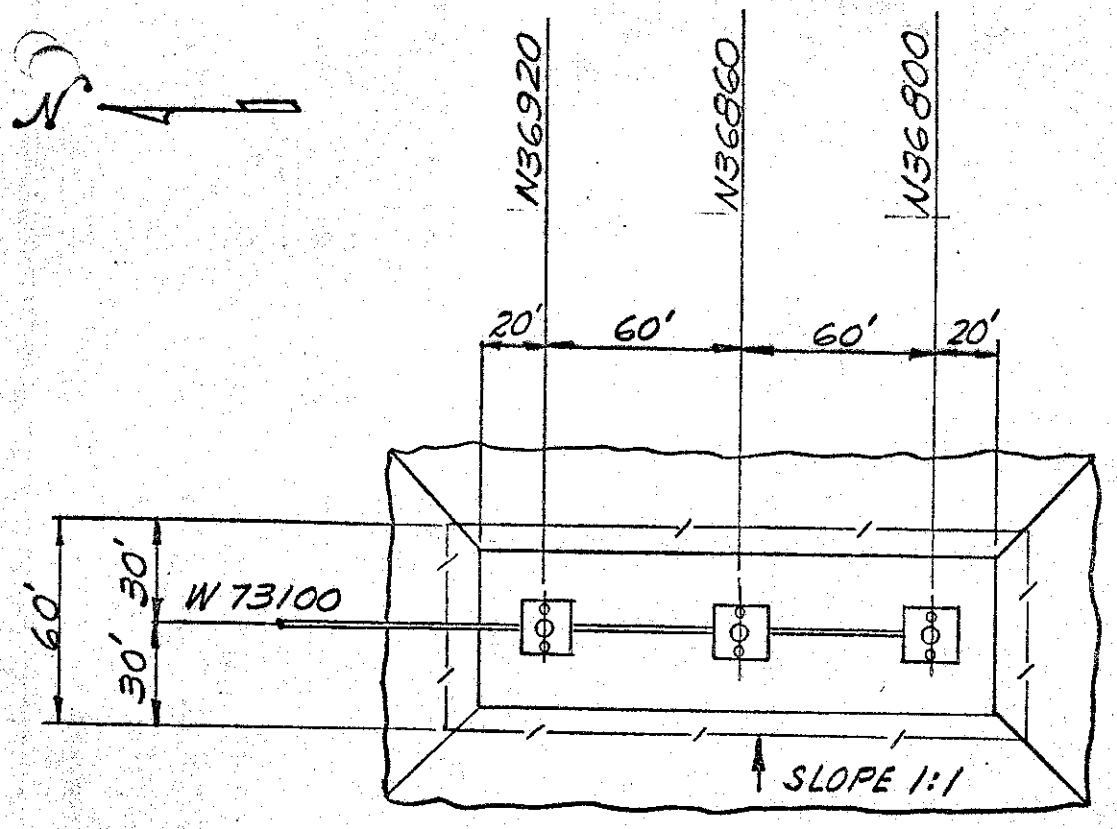


PLAN

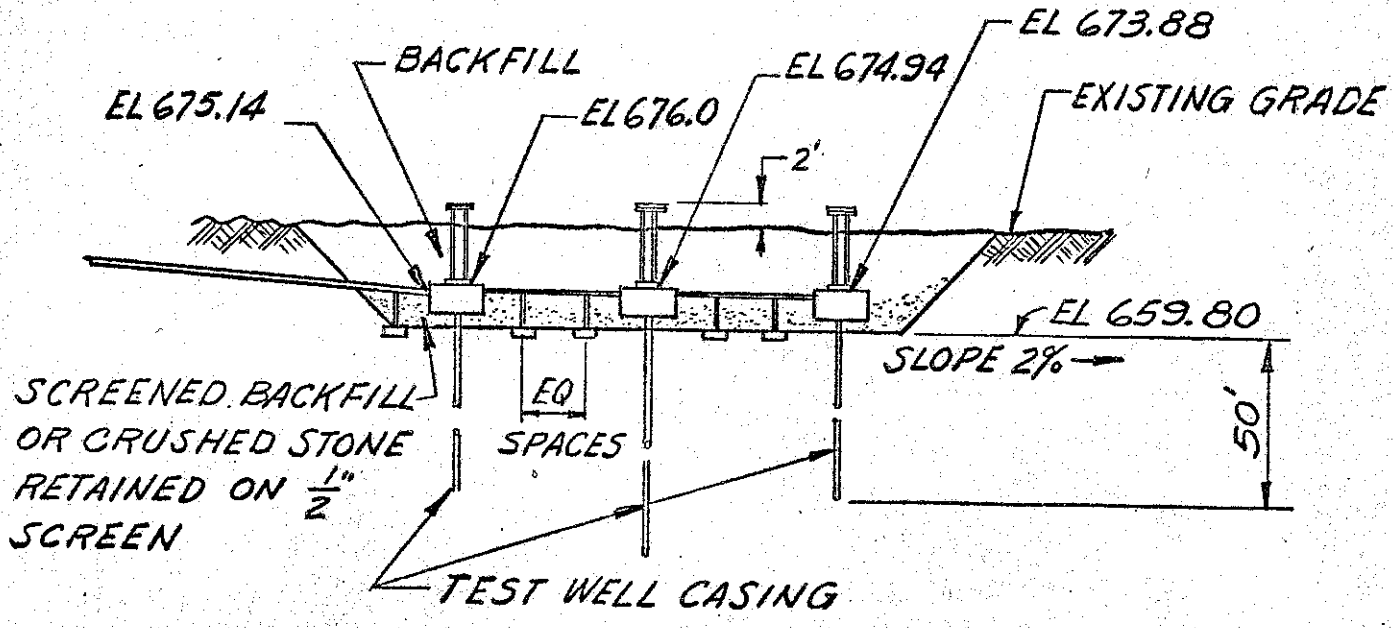


216-U-8
H-2-43028

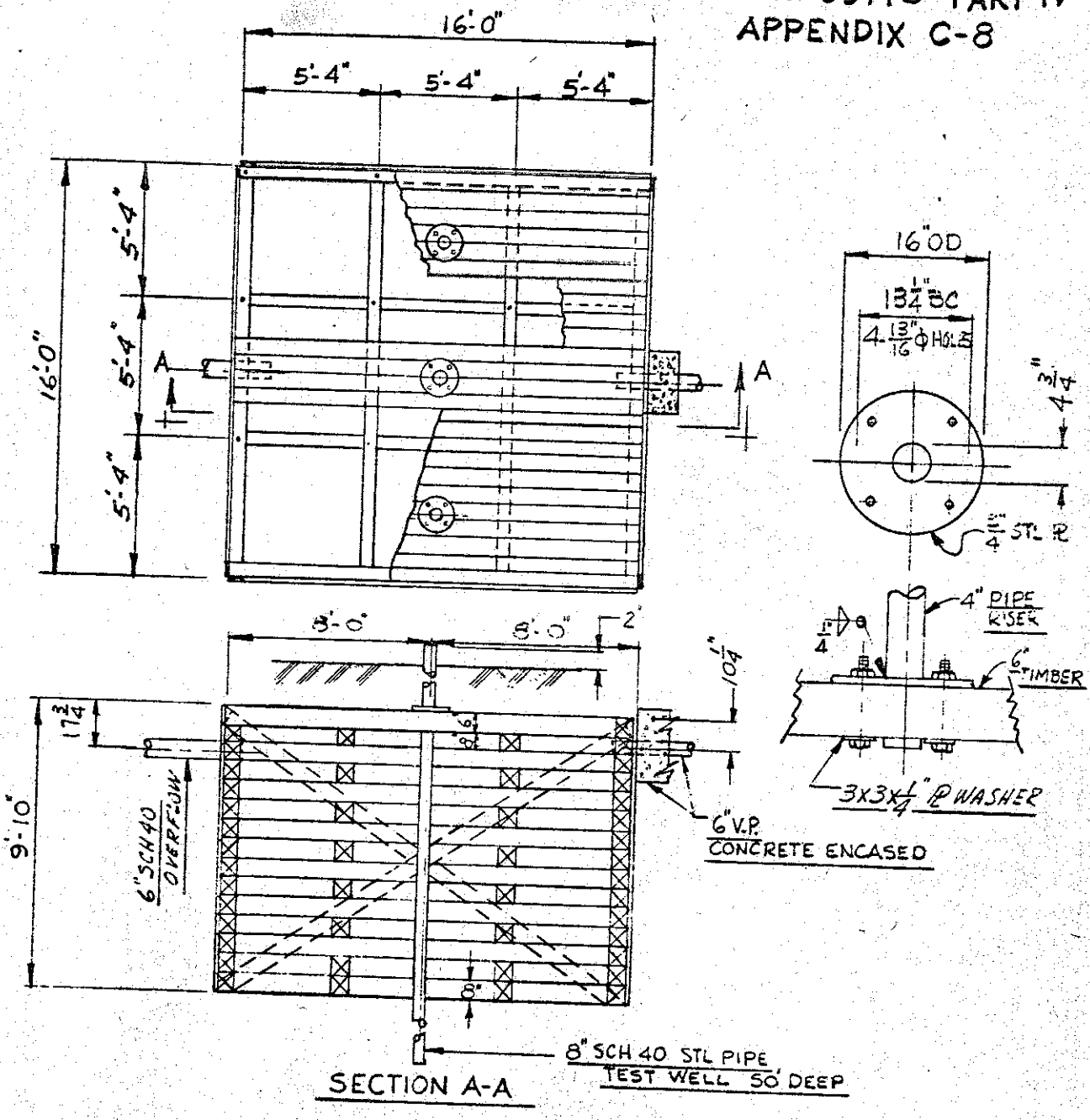


SECTION A-A

TAKEN FROM H-2-43027

216-U-8

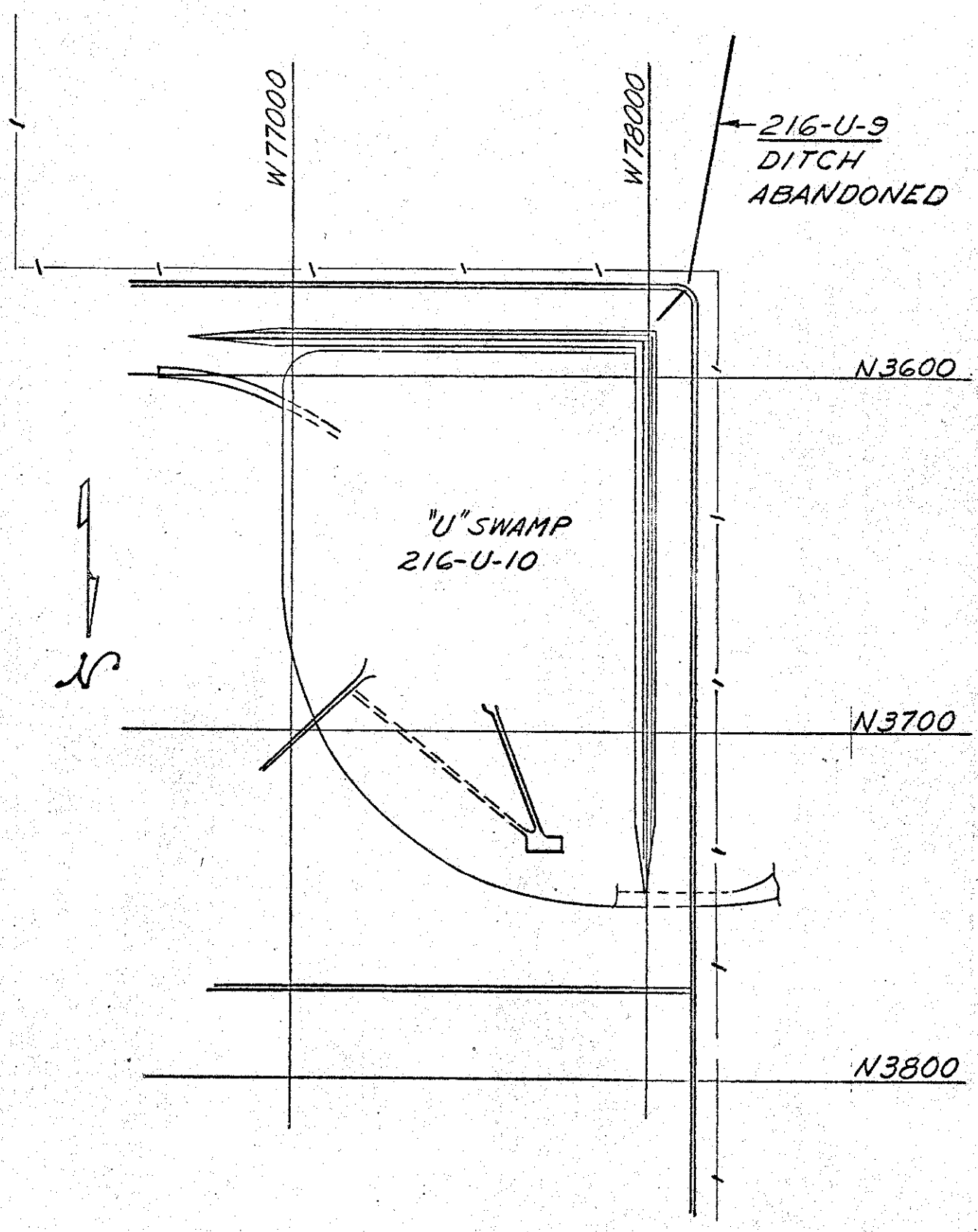


216-U-9-DITCH
H-2-2430

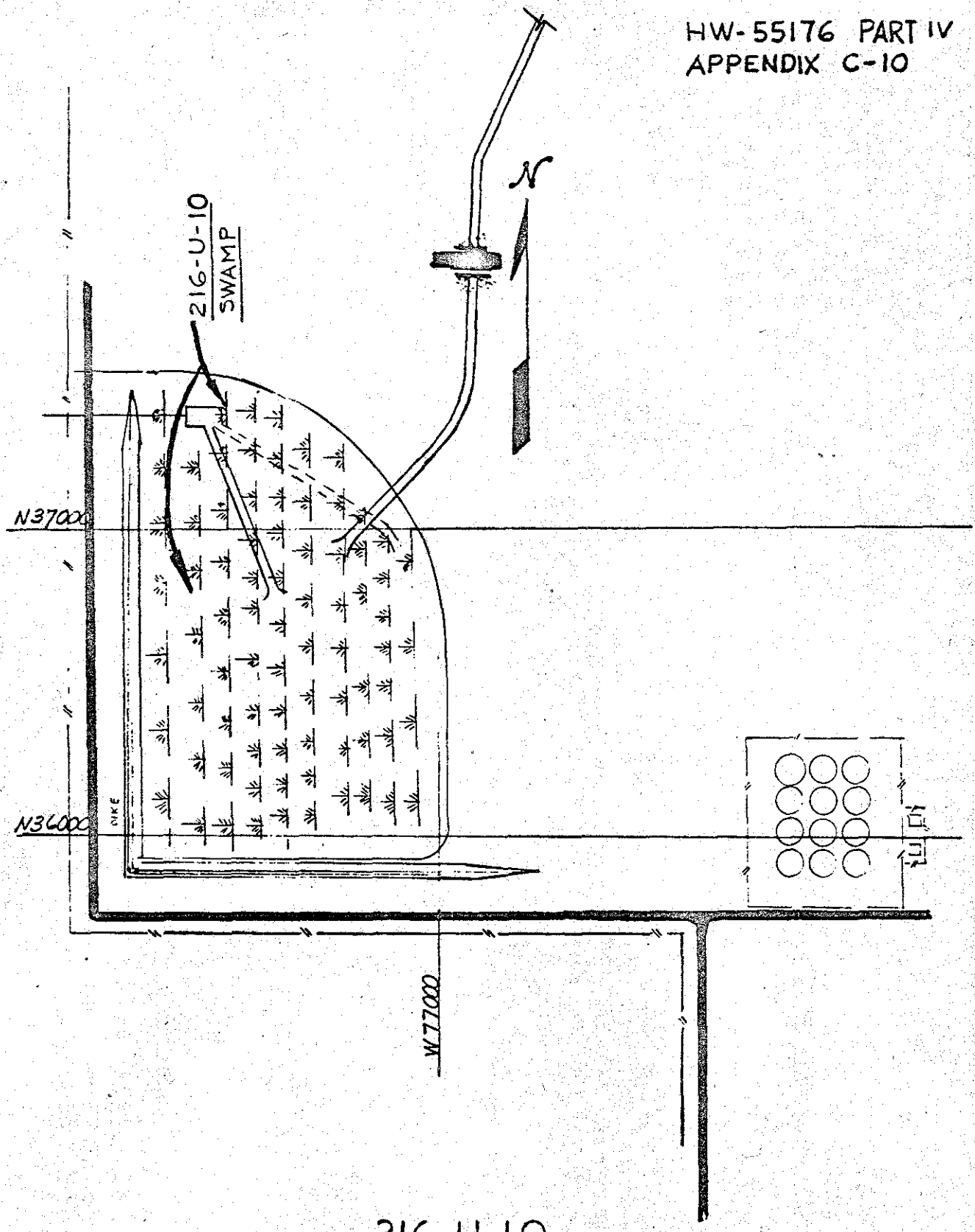
216-U-10
SWAMP
N
N37000
N36000
DIKE
W77000
216-U-10

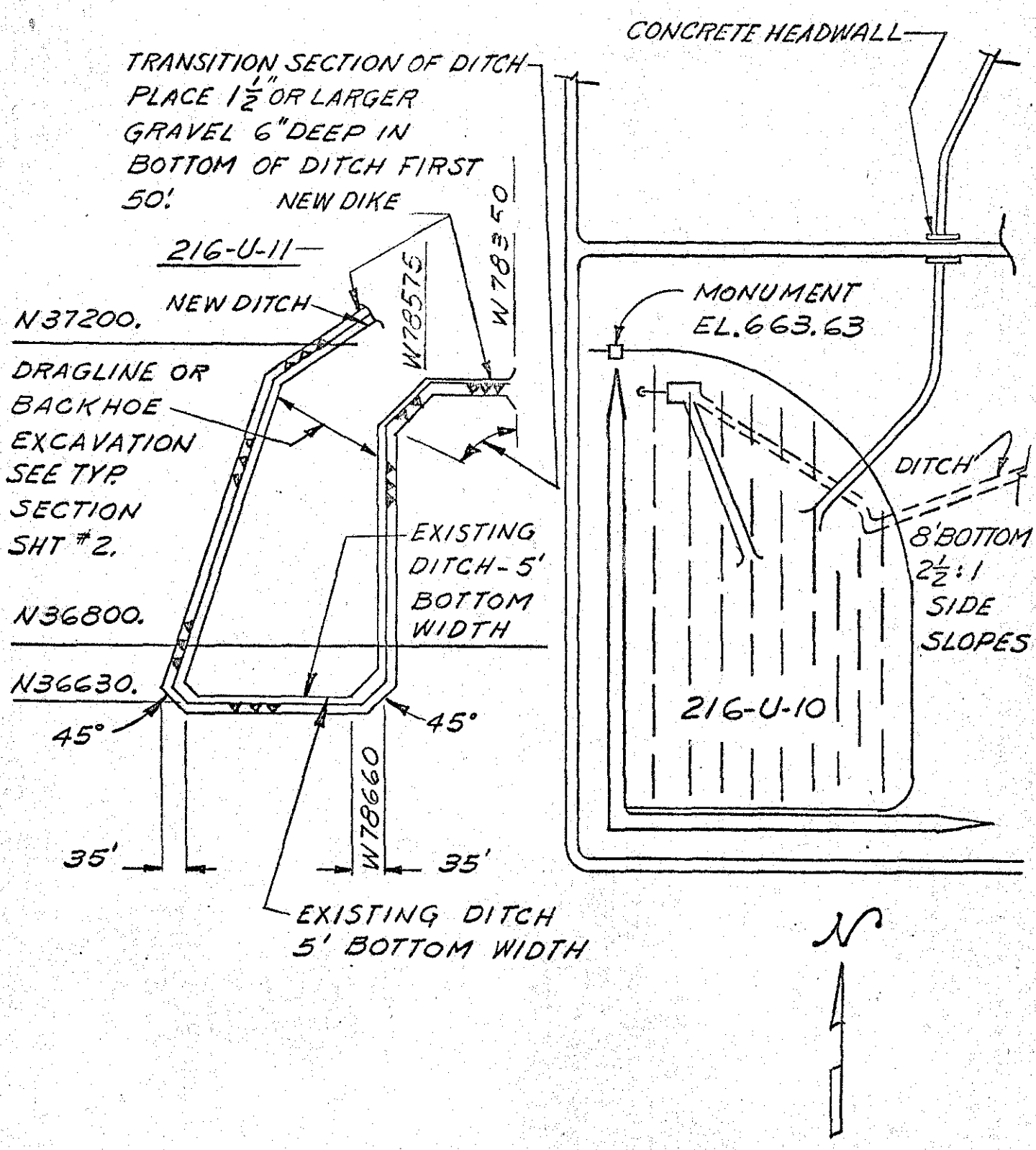


216-U-11
SK-2-1888

HW-55176-PT 4
APPENDIX C-12
JS 10-12-59

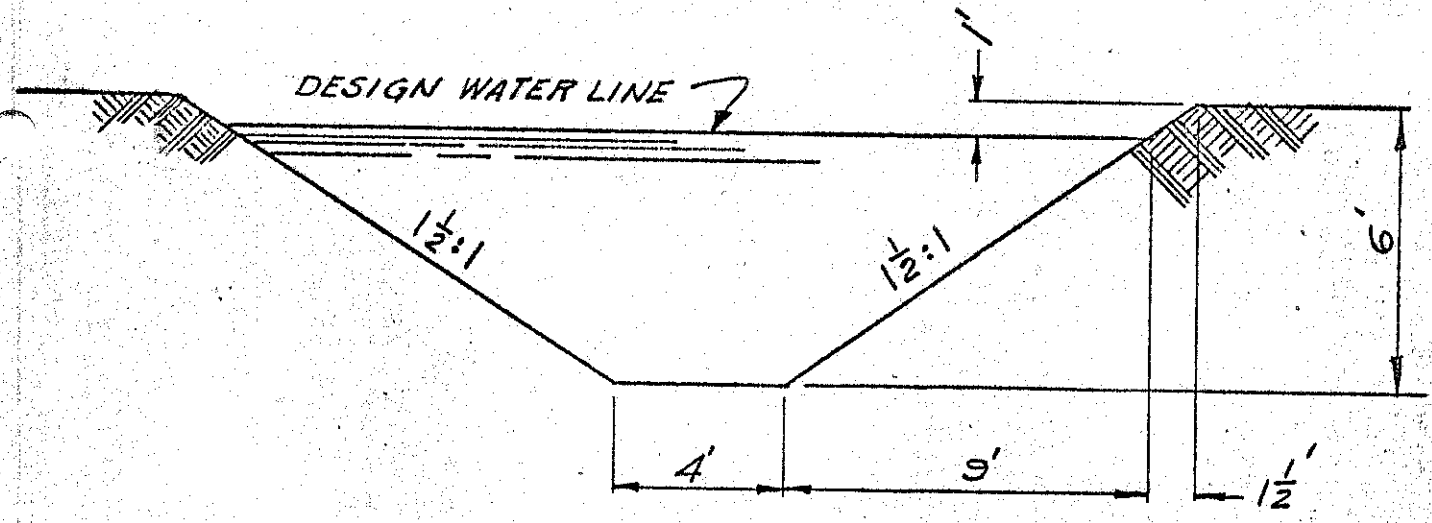


TYPICAL SECTION

HW 55176-PART 4
APPENDIX C-13
DRAWN JLSIMEK 12/17/59

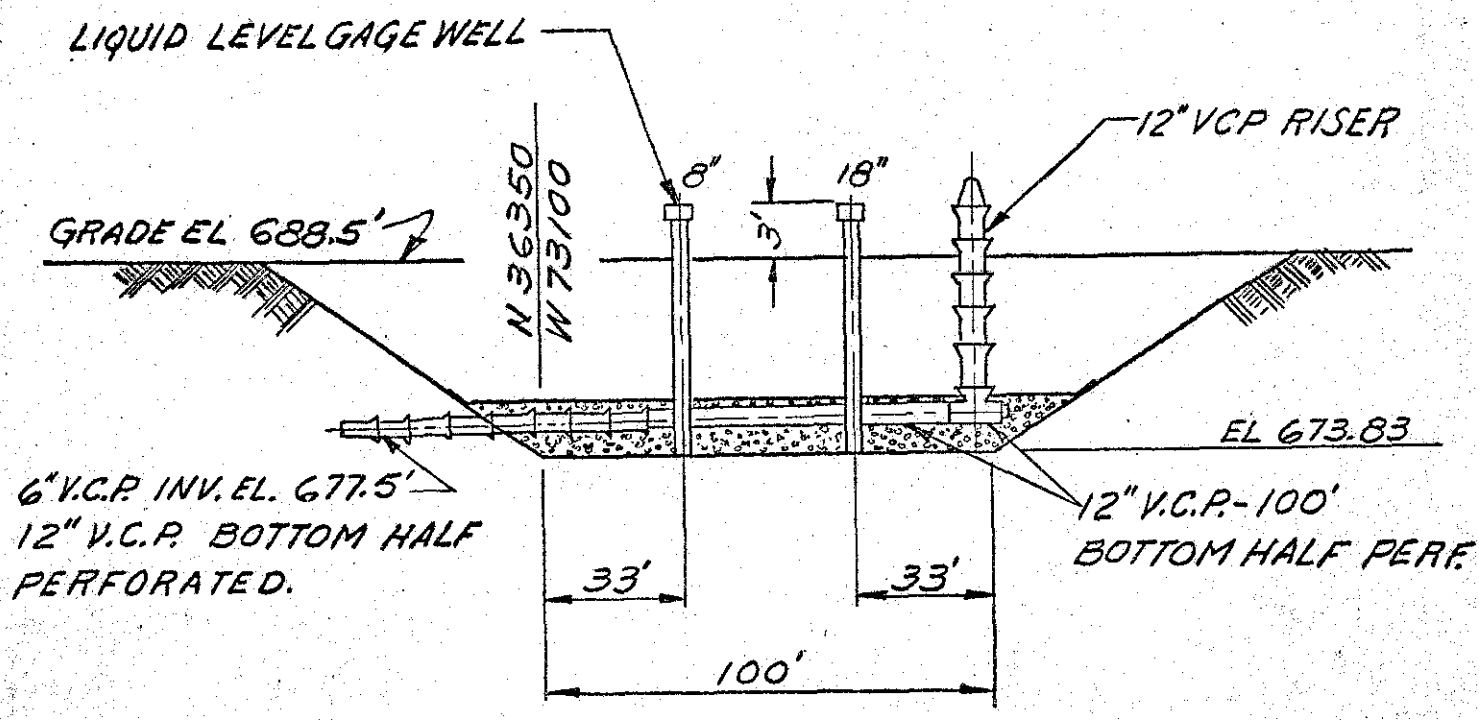


LONGITUDINAL SECTION

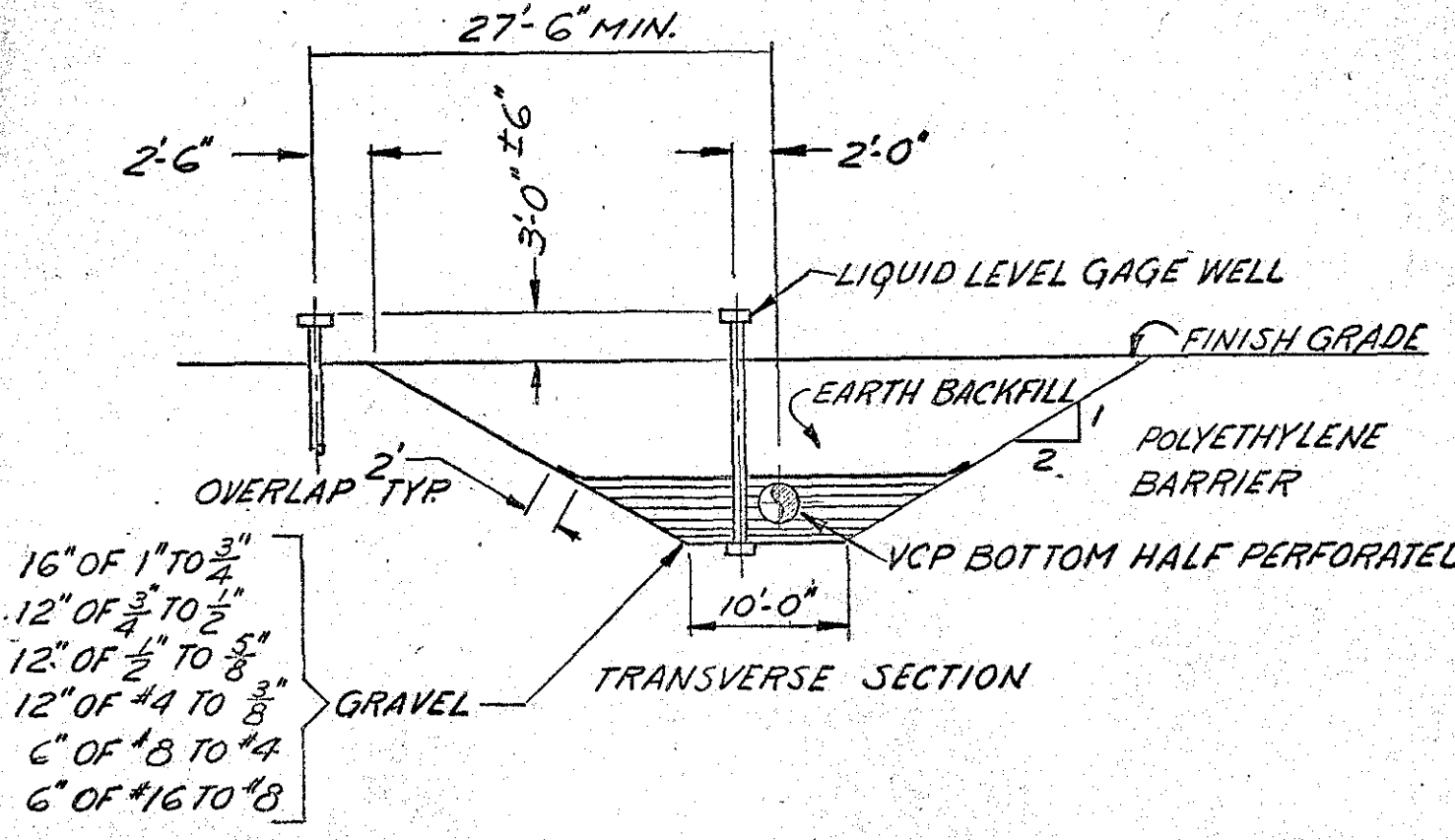


TRANSVERSE SECTION

216-U-12

H-2-31321
H-2-31322

14

42

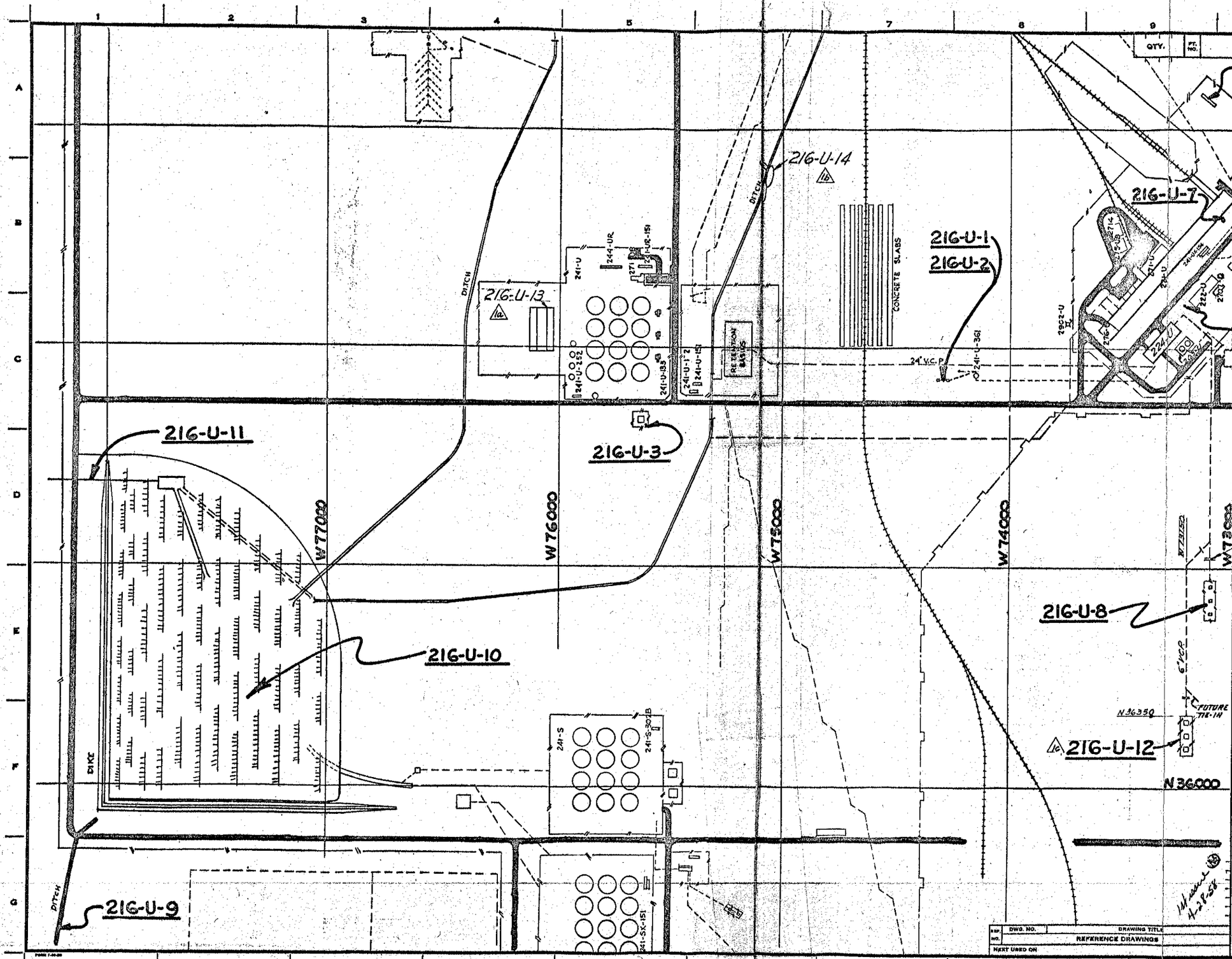


HW-55176-PT XV
APPENDIX "D"

APPROVED
FOR DESIGN
NOT FOR CONSTRUCTION

| No. | DESCRIPTION | REV. BY DATE | APP'D BY | FOR | DATE |
|---|---|---|---|---|---|
| 1. | (C) ADDED U-12-ZONE 8-F; (B) ADDED U-14-ZONE 7-; (A) ADDED U-13-ZONE 4-B | | | | |

REVISIONS

DWG. NO. SK-2-17815 — SHEET NO. — SHEETS — REV. NO. —

CLASSIFICATION: NONE — CLASSIFIED BY — DATE 11/25/58

SCALE:
DRAWN — DATE 3-26-58
CHECKED — DATE
ISSUED — DATE
DES. ENG. — UNIT
INST. NO. 782
PROJECT NO.

APPROVALS

| BY | FOR | DATE |
|---|---|---|
| | | |

U. S. ATOMIC ENERGY COMMISSION
HANFORD ATOMIC PRODUCTS OPERATION
GENERAL ELECTRIC
0400

"U" PLANT
LIQUID WASTE DISPOSAL SITES
216-U-SERIES

BLDG. NO. 216-U — DWG. NO. SK-2-17815 — SHT. NO. — SHEETS —

| REF. NO. | DWG. NO. | DRAWING TITLE |
|---|---|---|
| | REFERENCE DRAWINGS | |
| | NEXT USED ON | |

T PLANT

UNCLASSIFIED
(CLASSIFICATION)

GENERAL ELECTRIC

HANFORD ATOMIC PRODUCTS OPERATION - RICHLAND, WASHINGTON

DOCUMENT NO.
HW-55176 - Pt. V

COPY NO.

DATE
April 29, 1958

ISSUING FILE

TITLE

INDEX OF CPD CRIB BUILDING NUMBERS
DESIGNS OF CPD RADIOACTIVE LIQUID WASTE
DISPOSAL SITES

AUTHOR

V. W. Wood

| ROUTE TO | PAYROLL NO. | LOCATION | FILES ROUTE DATE | SIGNATURE AND DATE |
|---|---|---|---|---|
| WA Haney | | 325 | | WA Haney 5/12/58 |
| | | | | |
| | | | | |
| | | | | |
| | | | | |
| | | | | |
| | | | | |
| | | | | |
| | | | | |
| | | | | |
| | | | | |
| | | | | |
| | | | | |
| | | | | |
| | | | | |

UNCLASSIFIED
(CLASSIFICATION)

C-1899-MS (5 - 56)

TO BE USED ON UNCLASSIFIED AND OFFICIAL USE ONLY DOCUMENTS

# INDEX OF CPD CRIB BUILDING NUMBERS DESIGNS OF CPD RADIOACTIVE LIQUID WASTE DISPOSAL SITES

## Part V of VII Parts
## Process Technology - Study Report

by

V. W. Wood
Radiological Design and Development
Facilities Engineering Operation
CHEMICAL PROCESSING DEPARTMENT

April 29, 1958

D I S T R I B U T I O N

| | |
|---|---|
| CR Bergdahl | TG LaFollette |
| JM Bernard | CE Linderoth |
| WG Browne | HE Parker |
| E Doud | HF Peterson |
| J Durbin | DW Pearce |
| GK Carpenter | OH Pilkey |
| JR Cartmell | EL Reed |
| JB Fecht | RA Roberts |
| DR Gustavson | OC Schroeder/SG Smolen |
| WA Haney | HP Shaw |
| JF Honstead | VW Wood |
| IM Jacques | Records Center |
| EB Jackson | 300 Files |
| CE Kent | Extras |

# INDEX OF CPD CRIB BUILDING NUMBERS DESIGNS OF CPD RADIOACTIVE LIQUID WASTE DISPOSAL SITES

Part V of VII Parts
Process Technology - Study Report

## INTRODUCTION

During the fourteen years or more which the separations areas have operated, many sites have been used for the disposal of radioactive liquid wastes. Various methods have been used in assigning building numbers to these sites and, in a number of cases, changes have been made which have brought about some confusion. One of the reasons being some currently used building numbers do not agree with the numbers existing on design prints for the facilities. Reference (2) was an effort to establish a listing of the liquid waste disposal sites. It required considerable time and research to locate information concerning these sites.

Many varied designs have been used for the disposal of radioactive liquid wastes. Reverse wells, trenches, cribs or caverns, etc, have been used. Specific information on these facilities is often difficult to obtain, for in some instances, they were constructed on work orders with no recorders being retained on the design. In general, the design on each facility has been different. This has made it extremely difficult for people to have a good working knowledge of the various waste disposal sites.

## PURPOSE

The purpose of this report (Part V) is to provide a ready reference to the "T" Area waste disposal sites as well as a compilation of sketches showing the basic information on the design of each facility.

Another objective is to establish a simplified and uniform numbering system. Still another objective is to provide an up-to-date tabulation. Subsequent parts of this report will provide information on cribs for other areas.

## SUMMARY AND CONCLUSIONS

All radioactive liquid waste disposal sites should have the 216 Building number designation. These should be further grouped by giving all such sites for Purex a prefix of 216-A. Other major series would be 216-S for Redox; 216-T for "T" Area; 216-B for "B" Area; 216-U for "U" Area and 216-Z for "Z" Area.

The numbering list in "Official Hanford Works Building List - Specification HW-5000" by Engineering Files - Construction Engineering Operation should be revised to more closely follow the above numbering system.

RECOMMENDATIONS

It is recommended that the following action be taken:

1. All groups and services referring to the "T" Area cribs or report data concerning them should use the index numbering system as presented in this report.

2. That all drawings concerning these disposal sites, including maps, be revised to show the proper locations and numbers for these cribs.

3. Any suggestions for improving the usefulness of this report should be referred to the author.

DISCUSSION

When all parts of the report are completed, and the work outlined in the report is completed, much confusion will be eliminated and more people will be better informed on the design of each waste disposal facility. The report will provide a firm basis for future building number assignments.

While some sincere effort has been made to try and keep a methodical system for recording waste disposal sites, a number of problems have developed. For example, HW-5000, Sheet 29 of 50 lists only two cribs in the 216-Z series. They are 216-Z-8 and 216-Z-9. Although no coordinates are given, it is doubtful if these refer to the same cribs with the same number as given in Reference "2".

As indicated earlier, the use of the crib index, as presented in this report should be very easy. In addition, information is presented which is very difficult to locate in the records and in some cases it is not available in the records.

REFERENCES

1. HW-5000, "Official Hanford Works Building List - Specification HW-5000" by Engineering Files - Construction Engineering Operation.

2. HW-43121, "Tabulation of Radioactive Liquid Waste Disposal Facilities" by HV Clukey dated May 10, 1956.

3. HW-33305, "Tabulation of Radioactive Liquid Waste Disposal Facilities," by HV Clukey dated October 8, 1954.

4. HW-41535, "Unconfined Underground Radioactive Waste and Contamination in the 200 Areas" by KR Heid.

## CROSS REFERENCE FOR "T" AREA RADIOACTIVE LIQUID WASTE DISPOSAL SITES

| Suggested Crib No. | Number Listed in HW-5000 | Number Listed in HW-43121 | Original Or Number Used On Drawings | Remarks |
|---|---|---|---|---|
| 216-T-1 | 216-T-1 | 216-T-1 | None | "T" Trench |
| 216-T-2 | 216-T-2 | 216-T-2 | None | Reverse Well |
| 216-T-3 | None | 216-T-3 | None | Reverse Well |
| 216-T-4 | 216-T-4 | 216-T-4 | None | "T" Swamp |
| 216-T-5 | 216-T-5 | 216-T-12 | 216-T-5 | Trench |
| 216-T-6 | 361-T-H2 | 216-T-5 | 361-T-H2 | |
| 216-T-7 | None | 216-T-7 | 241-T-H2 | Crib & Tile Field |
| 216-T-8 | 222-T-1&2 | 216-T-8 | None | |
| 216-T-9 | None | 216-T-9 | None | Trench |
| 216-T-10 | None | 216-T-10 | None | Trench |
| 216-T-11 | None | 216-T-11 | None | Trench |
| 216-T-12 | None | 216-T-11 | 207-T | Sludge Grave |
| 216-T-13 | None | 216-T-12 | 269-W | Decontam. Trench |
| 216-T-14 | None | 216-T-13 | 216-T-1 | Graves |
| 216-T-15 | None | 216-T-14 | 216-T-2 | Graves |
| 216-T-16 | None | 216-T-15 | 216-T-3 | Graves |
| 216-T-17 | None | 216-T-16 | 216-T-4 | Graves |
| 216-T-18 | None | None | 216-T-17 | |
| 216-T-19 | None | 216-TX-1 | 241-TX-153 | Crib to Tile Field |

| Suggested Crib No. | Number Listed in HW-5000 | Number Listed in HW-43121 | Original Or Number Used On Drawings | Remarks |
|---|---|---|---|---|
| 216-T-20 | None | 216-TX-2 | 155-TX | Contam. Acid Grave |
| 216-T-21 | 241-TX-3 | 216-TX-3 | 241-TX | Trenches |
| 216-T-22 | 241-TX-3 | 216-TX-4 | 241-TX | Trenches |
| 216-T-23 | 241-TX-3 | 216-TX-5 | 241-TX | Trenches |
| 216-T-24 | 241-TX-3 | 216-TX-6 | 241-TX | Trenches |
| 216-T-25 | None | 216-TX-7 | | |
| 216-T-26 | 216-TY-1 | 216-TY-1 | 216-TY | |
| 216-T-27 | 216-TY-2 | 216-TY-2 | 216-TY | |
| 216-T-28 | 216-TY-3 | 216-TY-3 | 216-TY | |
| 216-T-29 | None | | | |
| 216-T-30 | None | | | |
| 216-T-31 | None | | | |
| 216-T-32 | None | 241-T #1 & 2 | 241-T #1 & 2 | |

APPENDIX

A. Explanation of Parts to the Report

Part I will cover the Purex Radioactive Liquid Waste Disposal Sites.

Part II will cover the "Z" Plant Radioactive Liquid Waste Disposal Sites.

Part III will cover the Redox Plant Radioactive Liquid Waste Disposal Sites.

Part IV will cover the "U" Plant Radioactive Liquid Waste Disposal Sites.

Part V will cover the "T" Area Radioactive Liquid Waste Disposal Sites.
Part VI will cover the "B" Plant Radioactive Liquid Waste Disposal Sites.
Part VII will cover the "C" Plant, Hot Semi-works, the 200 North Areas and miscellaneous.

B. Index for "T" Area Radioactive Liquid Waste Disposal Sites.
C. Sketches of "T" Area Waste Disposal Facilities.
D. Map of "T" Area Crib Sites. (SK-2-17813).

# CRIB INDEX
## T AREA

| Number | Description Appendix Sheet | Service | Use Dates From | Use Dates To | Status |
|---|---|---|---|---|---|
| 216-T-1 | C-1 | Startup Wastes | 1945 | | Abandoned |
| 216-T-2 | C-2 | 222-T Lab Wastes | 1/45 | 4/50 | Replaced by T-8 |
| 216-T-3 | C-3 | 224-T and 5-6 Wastes | 1/45 | 8/46 | Abandoned |
| 216-T-4 | C-4 | Cooling Water & Chemical Sewer | 3/47 | - | Active |
| 216-T-5 | C-4 | 2nd Cycle and 112-T Wastes | 5/55 | | Specific Ret. |
| 216-T-6 | C-5 & 6 | 224-T and 5-6 Wastes | 8/46 | 6/51 | Abandoned |
| 216-T-7 | C-7 & 8 | 224-T, 5-6, and 2nd Cycle | 4/48 | 1956 | Abandoned |
| 216-T-8 | C-6 & C-9 | 222-T Lab Wastes | 4/50 | 1956 | Abandoned |
| 216-T-9 | C-10 | Equipment Decontamination Wastes | 6/51 | 3/54 | Abandoned |
| 216-T-10 | C-10 | Equipment Decontamination Wastes | 6/51 | 3/54 | Abandoned |
| 216-T-11 | C-10 | Equipment Decontaminatinn Wastes | 6/51 | 3/54 | Abandoned |
| 216-T-12 | C-11 | Retention Basin Sludge | 11/54 | | Abandoned |
| 216-T-13 | C-12 | Equipment Decontamination | 6/54 | - | Active |
| 216-T-14 | C-13 | 1st cycle Supernate | 1/54 | | Spec. Retention |
| 216-T-15 | C-13 | 1st cycle Supernate | 1/54 | 2/54 | " " |
| 216-T-16 | C-13 | 1st cycle Supernate | 2/54 | | " " |
| 216-T-17 | C-13 | 1st cycle Supernate | 2/54 | 6/54 | " " |
| 216-T-18 | C-14 | Scavenged Wastes | 11/53 | | " " |
| 216-T-19 | C-15 | 224-T, 242-T, 5-6, & 2nd cycle | 9/51 | 1959 | Abandoned |
| 216-T-20 | C-16 | 155 TX Catch Tank Wastes | 11/52 | | Abandoned |
| 216-T-21 | C-17 | 1st cycle supernate | 6/54 | | Spec. Retention |
| 216-T-22 | C-17 | " " " | 7/54 | | " " |
| 216-T-23 | C-17 | " " " | 7/54 | 8/54 | " " |
| 216-T-24 | C-17 | " " " | 8/54 | | " " |
| 216-T-25 | C-18 | Evaporator Bottoms | 9/54 | | " " |
| 216-T-26 | C-19 & 20 | Scavenged Wastes | 8/55 | 11/56 | Not being used |
| 216-T-27 | C-19 & 20 | " " | Not used | | " " " |
| 216-T-28 | C-19 & 20 | " " | Not used | | " " " |
| 216-T-29 | None | Sand Filter Drain | 1950 | - | Active |
| 216-T-30 | None | TX-154 Diversion Box Spill | 1953 | | Abandoned |
| 216-T-31 | None | 241-TX French Drain | 1954 | | Abandoned |
| 216-T-32 | C-21 | 224-T Wastes | 4/48 | 6/52 | Abandoned |

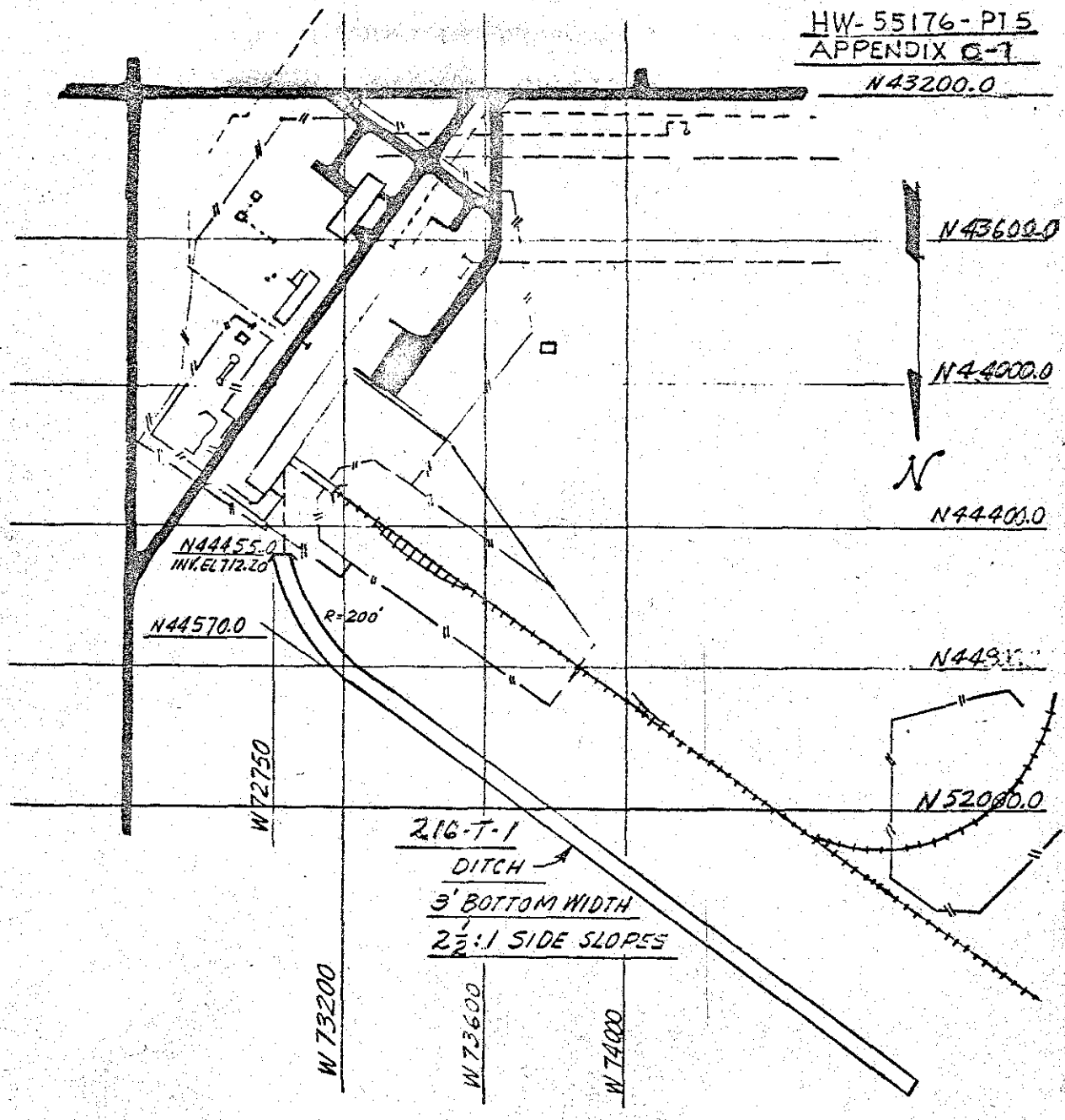


TAKEN FROM 2892-SHT. 11
H-2-5101

216-T-1

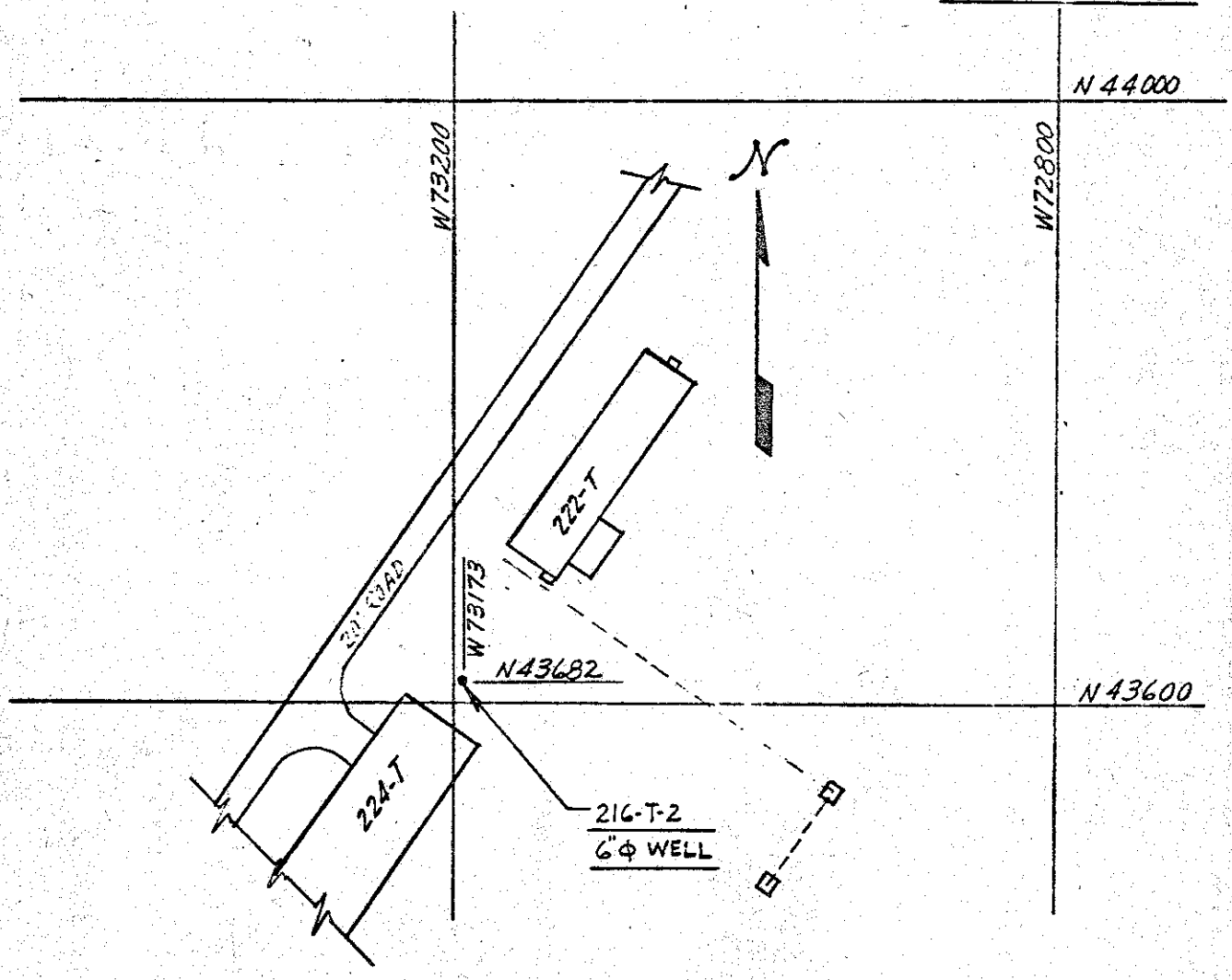


TAKEN FROM MAP 2924-SHT#11

216-T-2

HW 55176-PT 5
APPENDIX C-3
DRAWN JLSIMEK 12/16/55

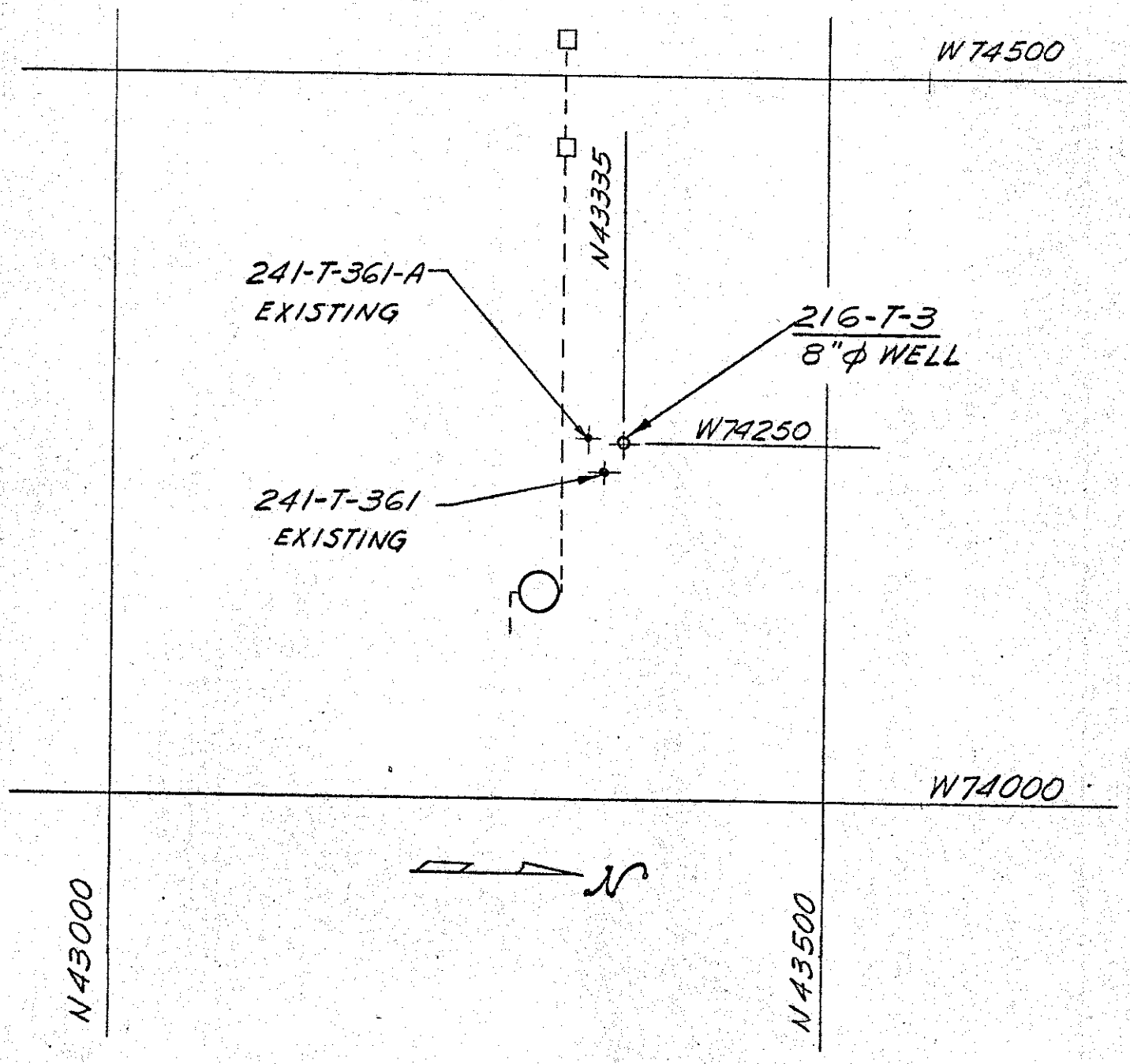


216-T-3
H-2-951

4

HW55176-PART5
APPENDIX C-4
DRAWN JLSIMEK 12/15/55

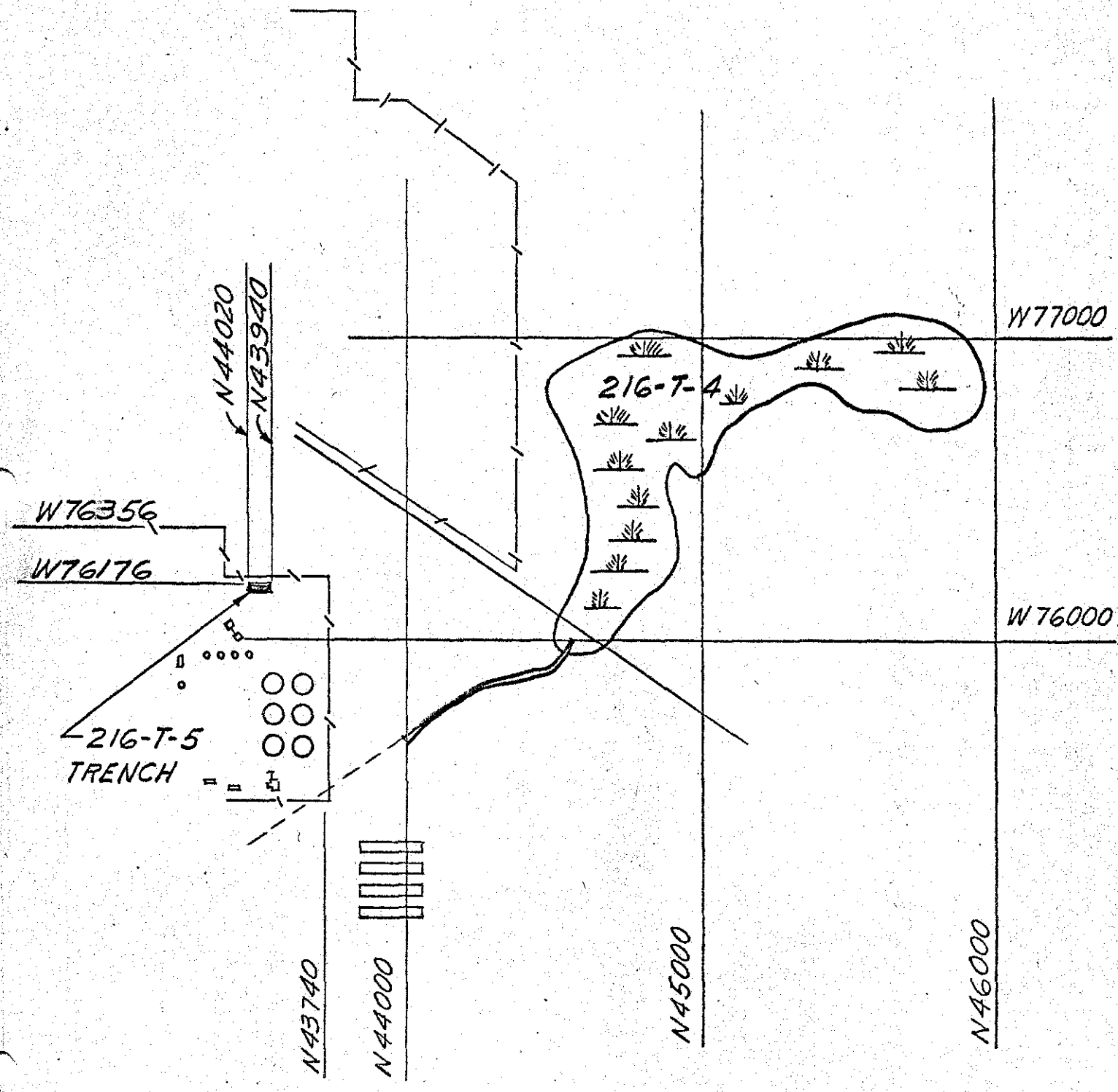


216-T-4
216-T-5
H-2-2430 & H-2-5719

5

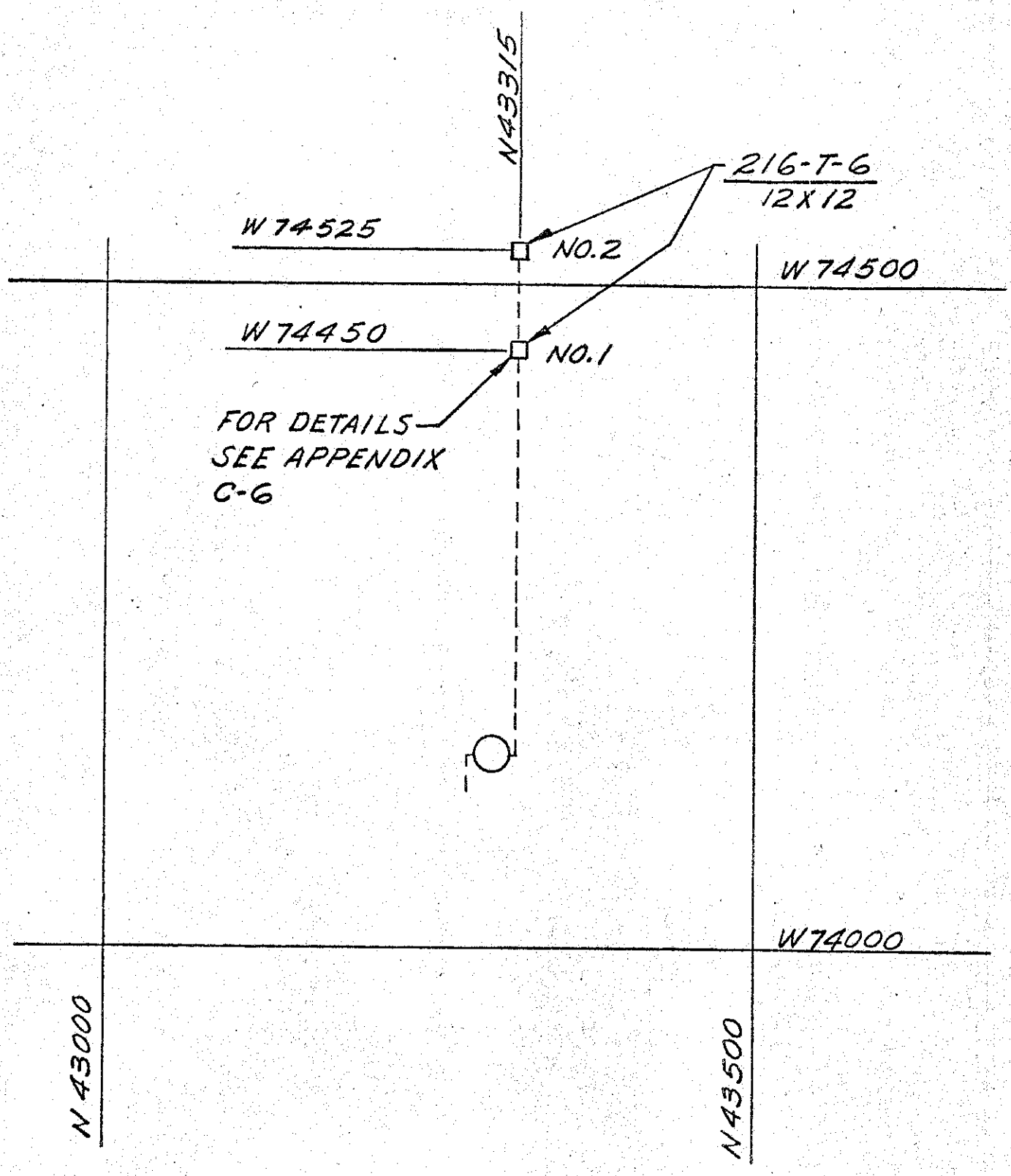
N43315
216-T-6
12X12
W74525
NO.2
W74500
W74450
NO.1
FOR DETAILS
SEE APPENDIX
C-6
W74000
N43000
N43500

216-T-6
H-2-951

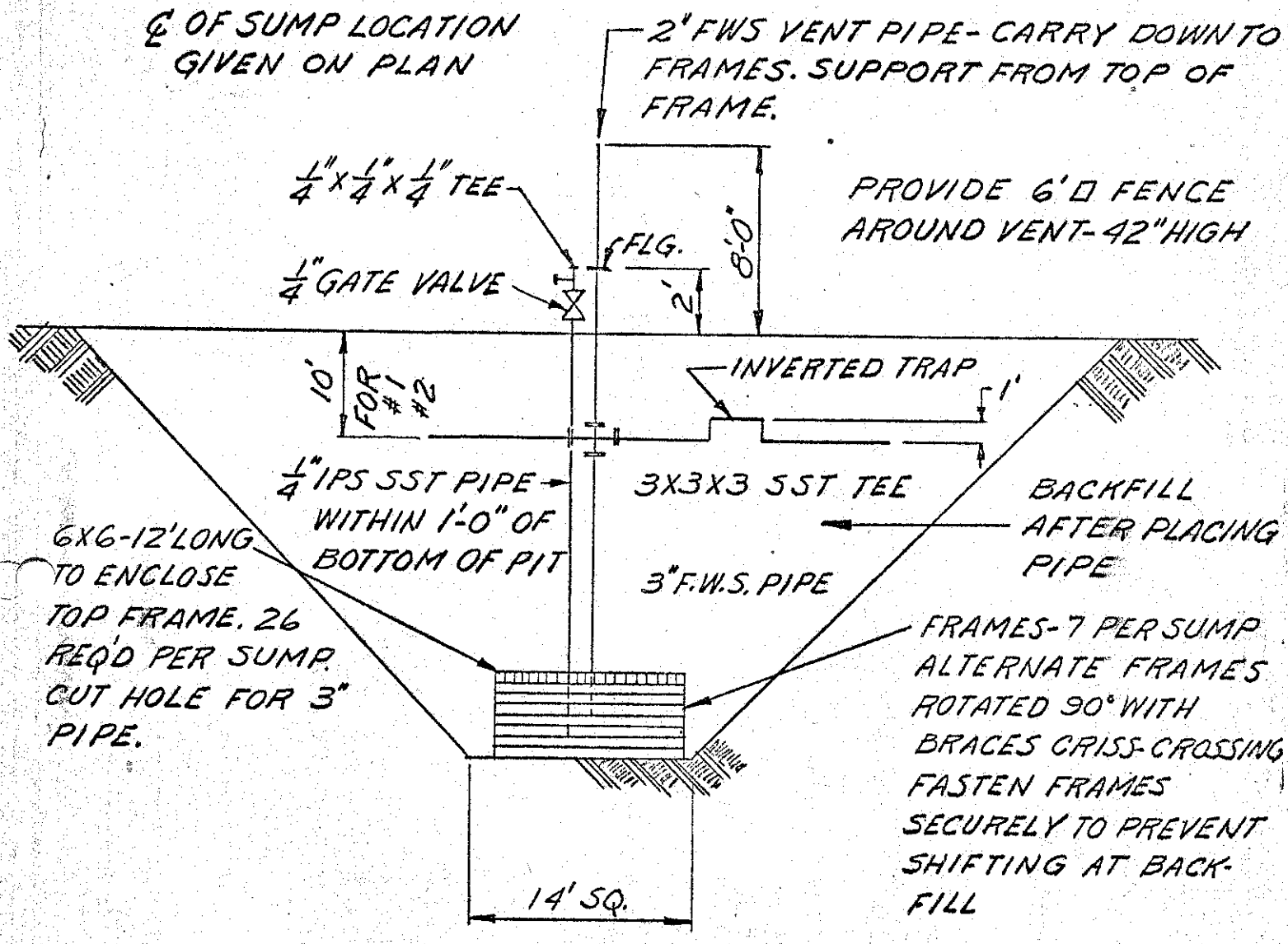


216-T-6

FOR PLAN - SEE APPENDIX C-5

216-T-8

FOR PLAN - SEE APPENDIX C-9

HW 55176-PART 5
APPENDIX C-7
DRAWN JL SIMEK 12/15/88

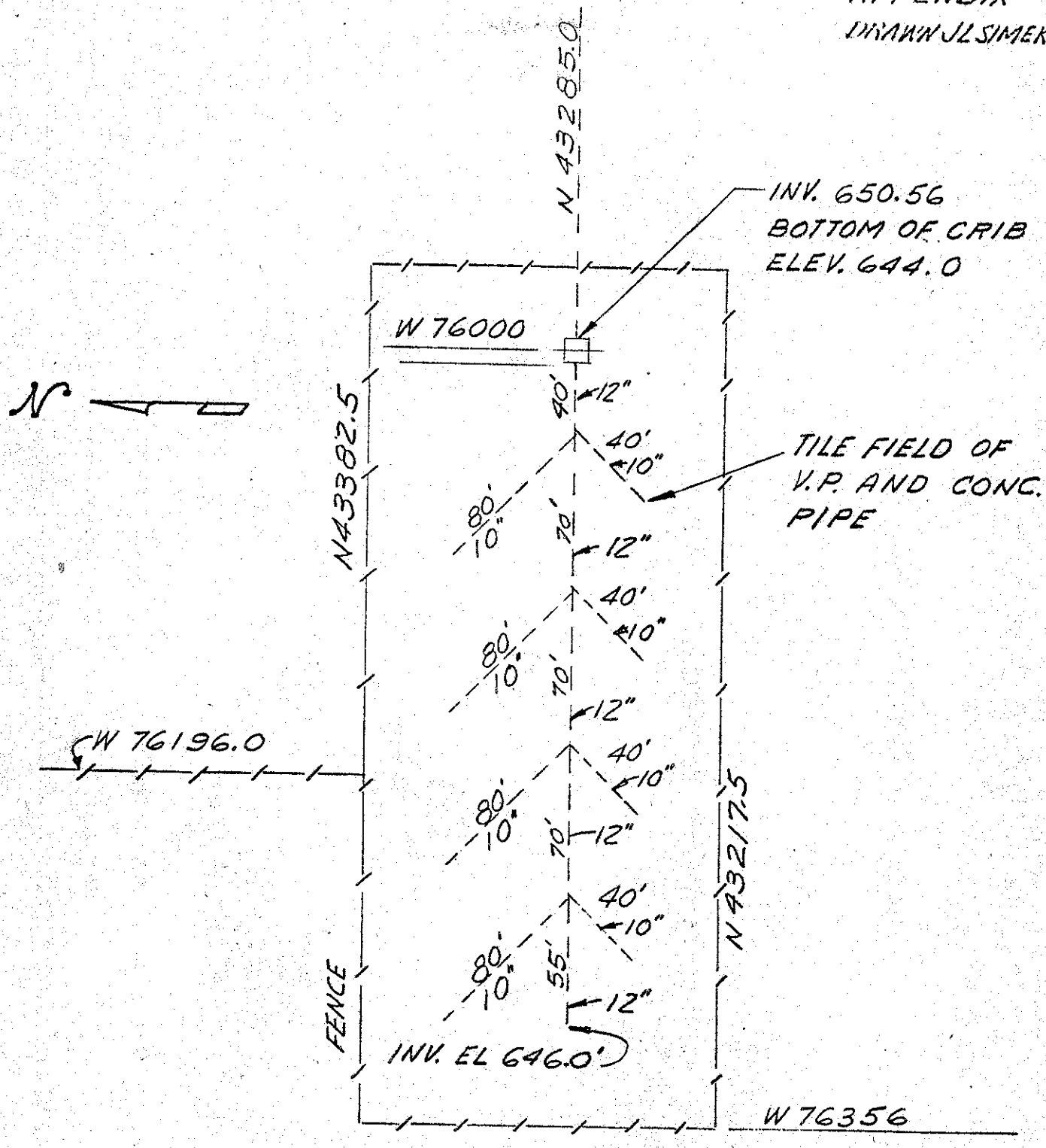


216-T-7
H-2-578

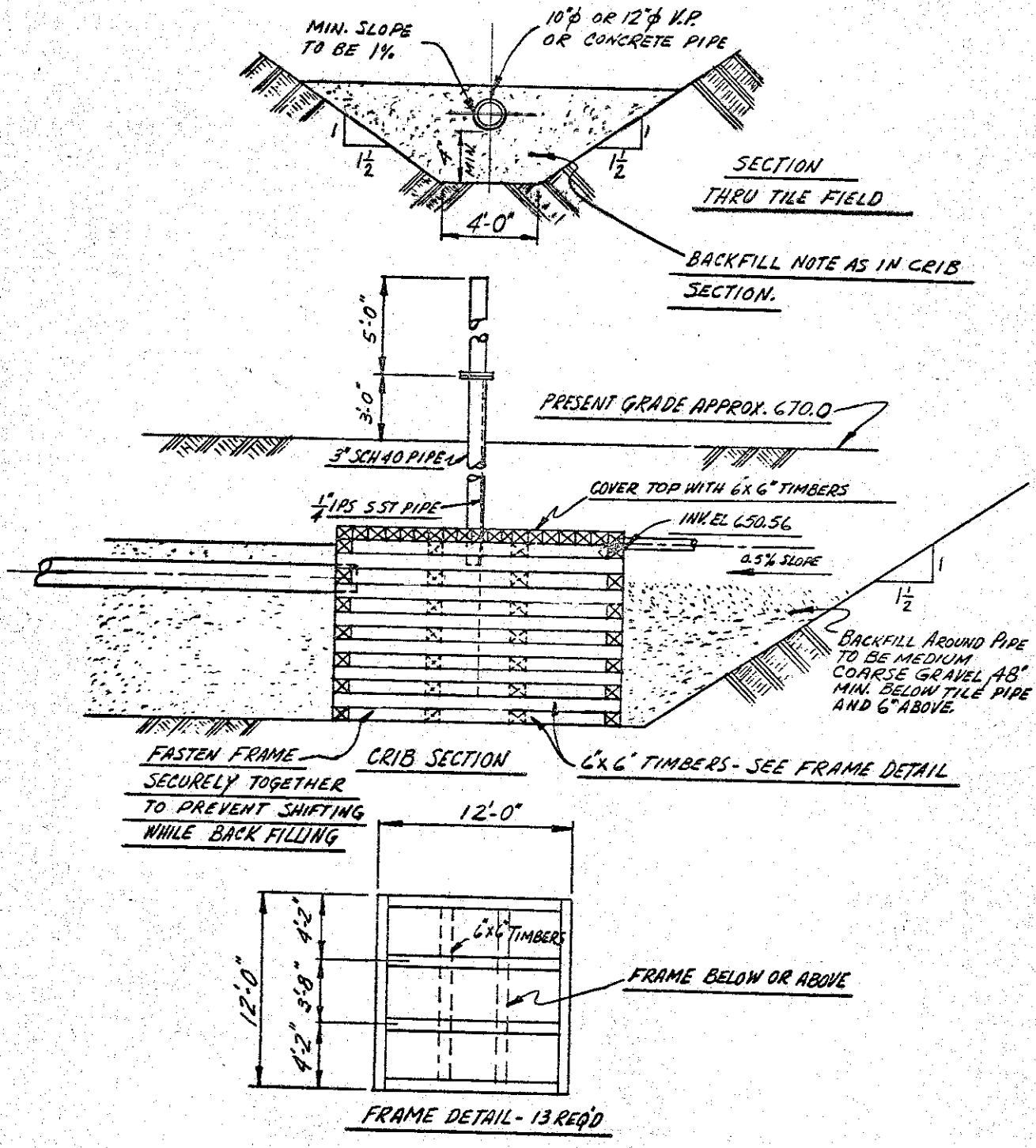


TAKEN FROM H-2-578

216-T-7

HW 55176-PART 5
APPENDIX C-9
DRAWN JLSIMEK 12/15/59

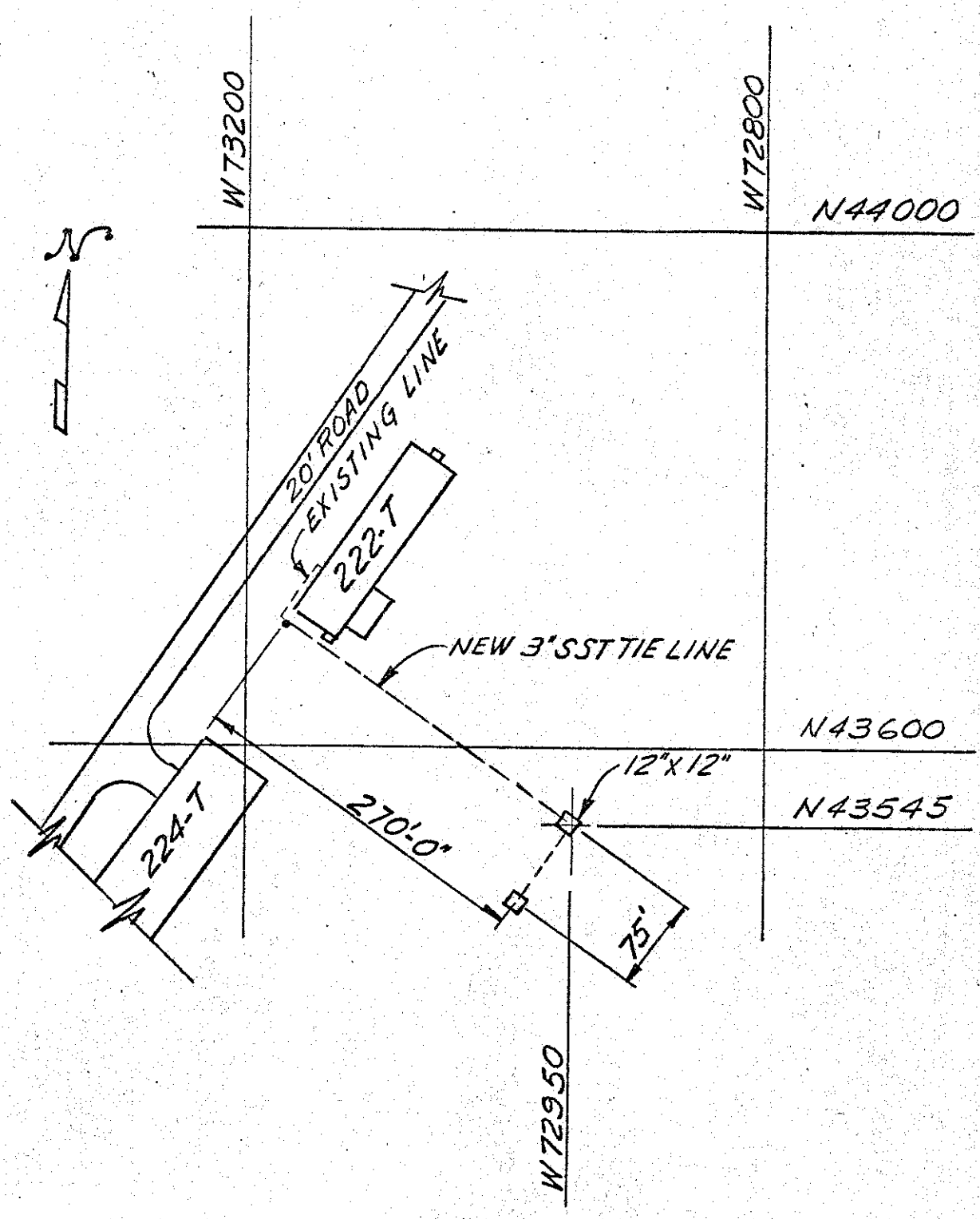


216-T-8
H-2-353

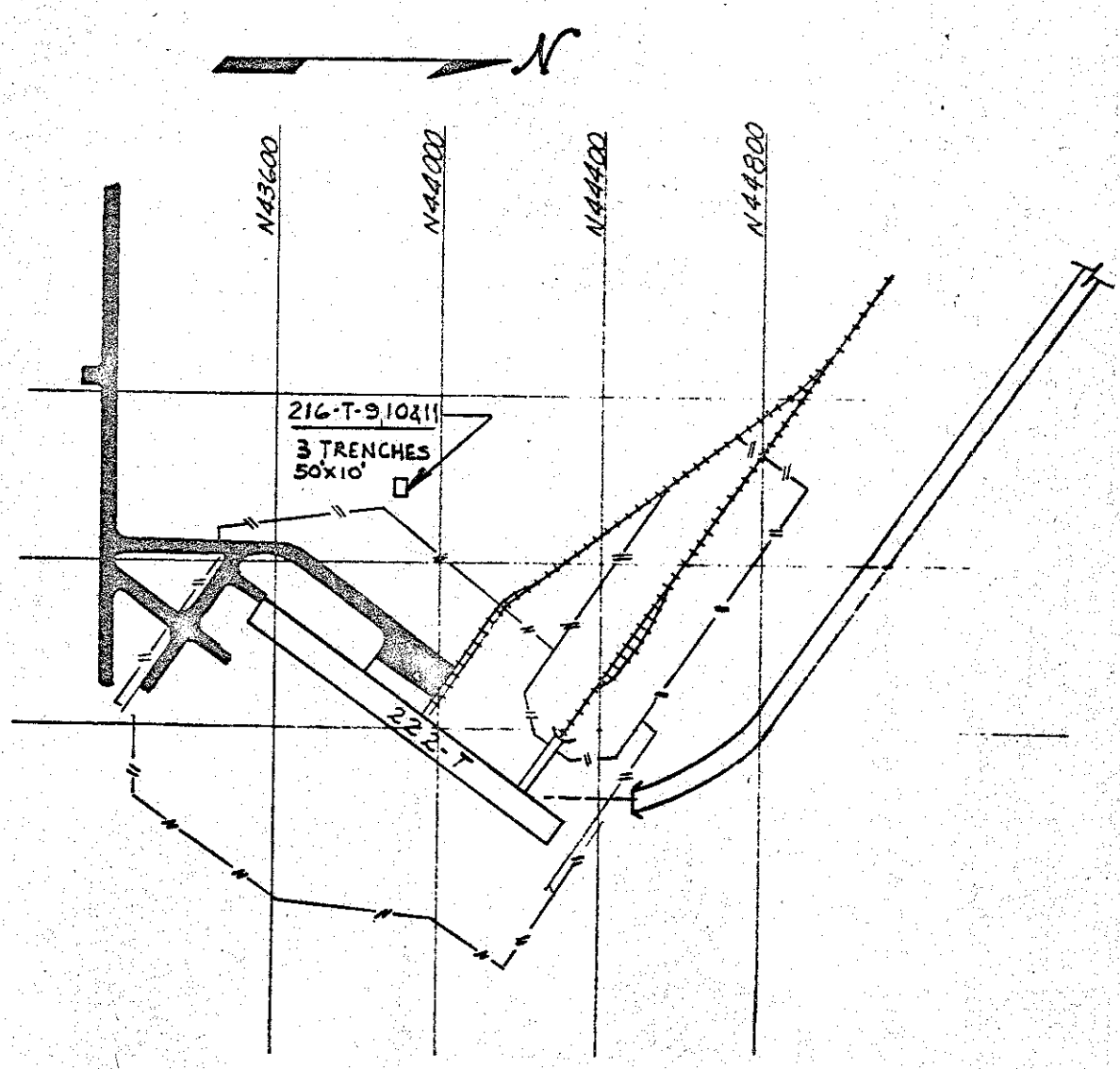
N
N43600
N44000
N44400
N44800
216-T-9,10&11
3 TRENCHES
50'x10'
222-T

216-T-9,10&11

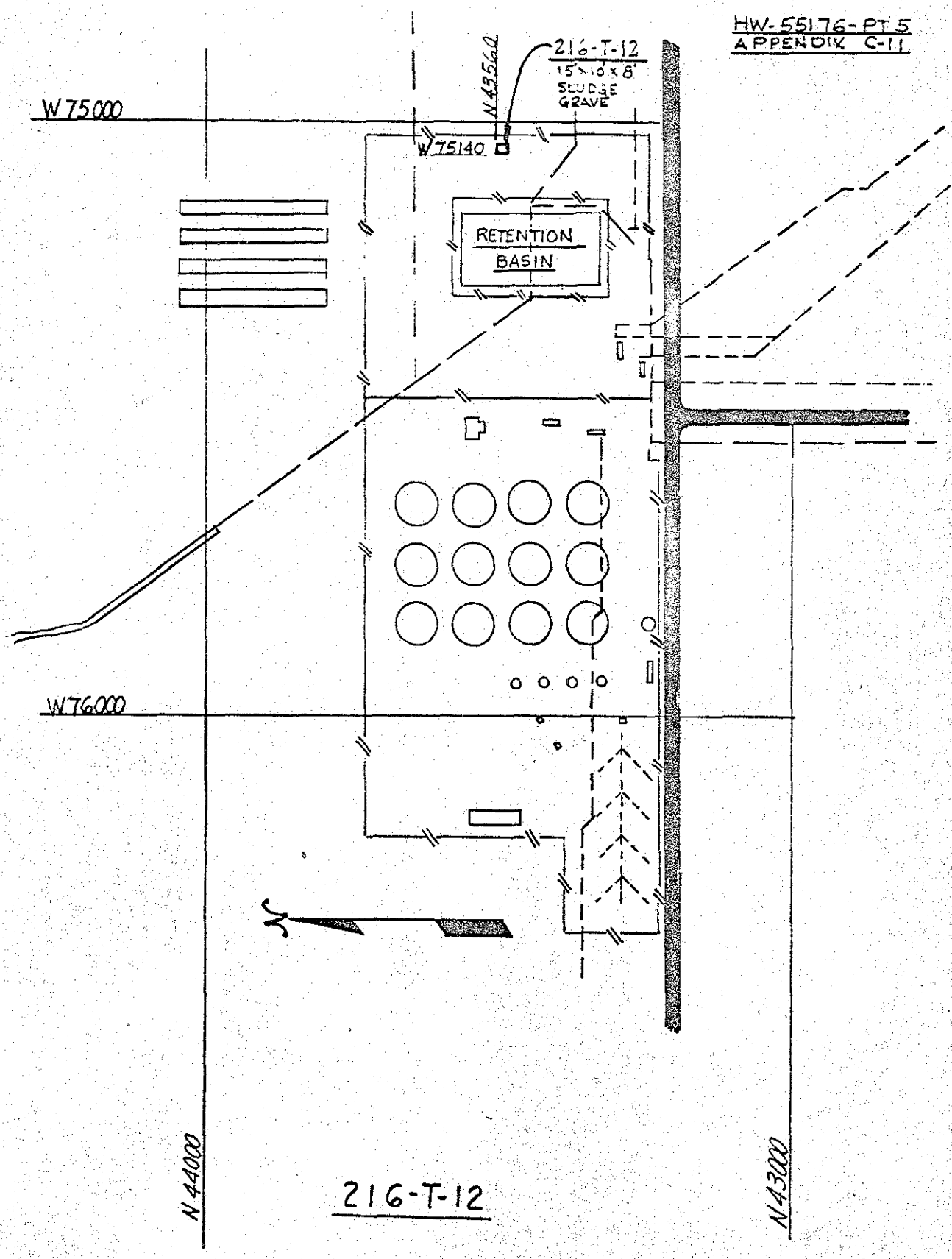
216-T-12
15'x10'x8'
SLUDGE
GRAVE
N 43560
W 75000
W 75140
RETENTION
BASIN
W 76000
N 44000
N 43000

216-T-12

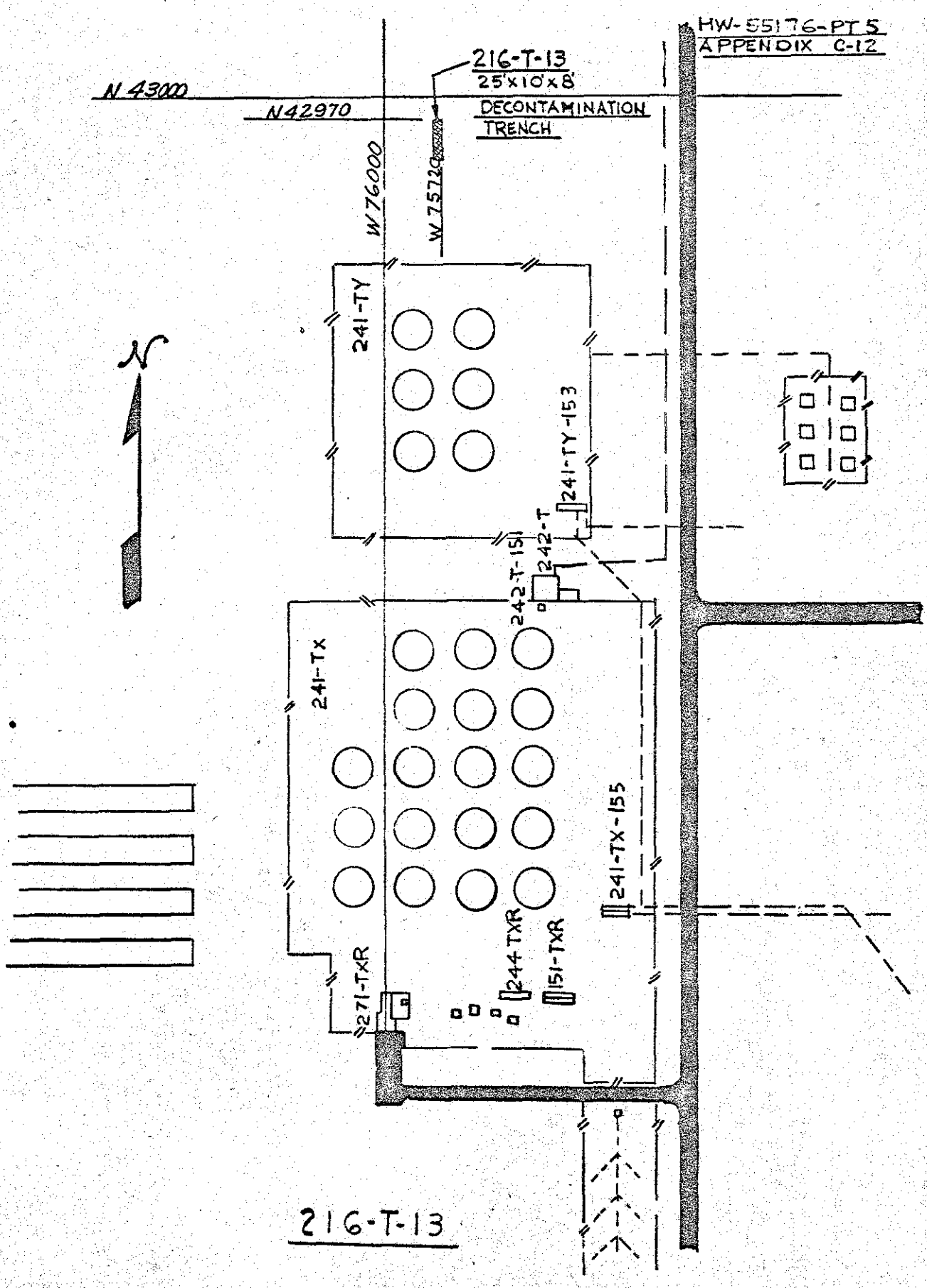
216-T-13
25'x10'x8'
DECONTAMINATION
TRENCH
N 43000
N42970
W 76000
W 75720
241-TY
241-TY-153
242-T
242-T-151
241-TX
241-TX-155
244 TXR
151-TXR
271-TXR
N

216-T-13

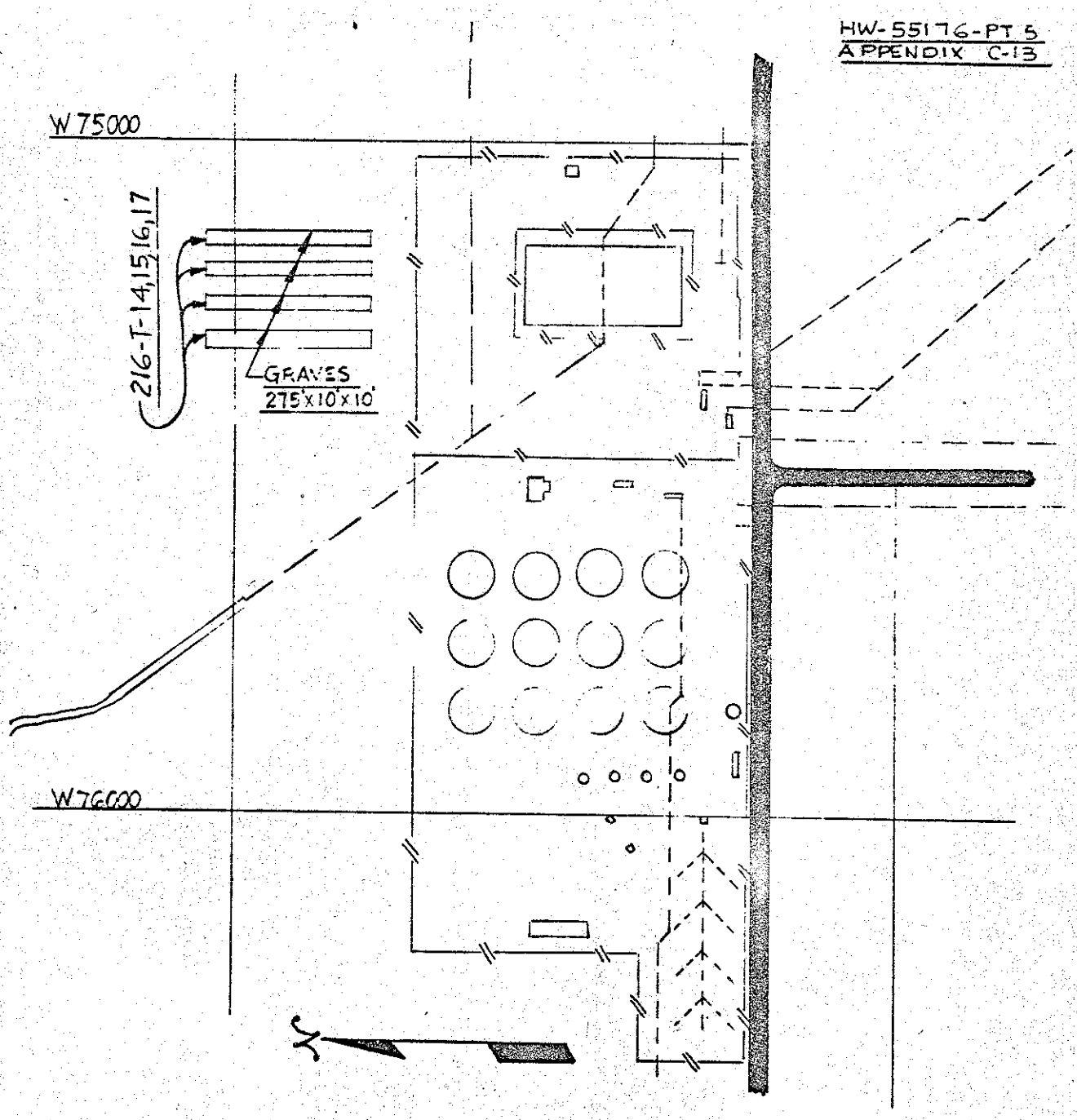


216-T-14,15,16,17

HW-55176-PART 5
APPENDIX C-14
DRAWN JLSIMEK 12/15/55

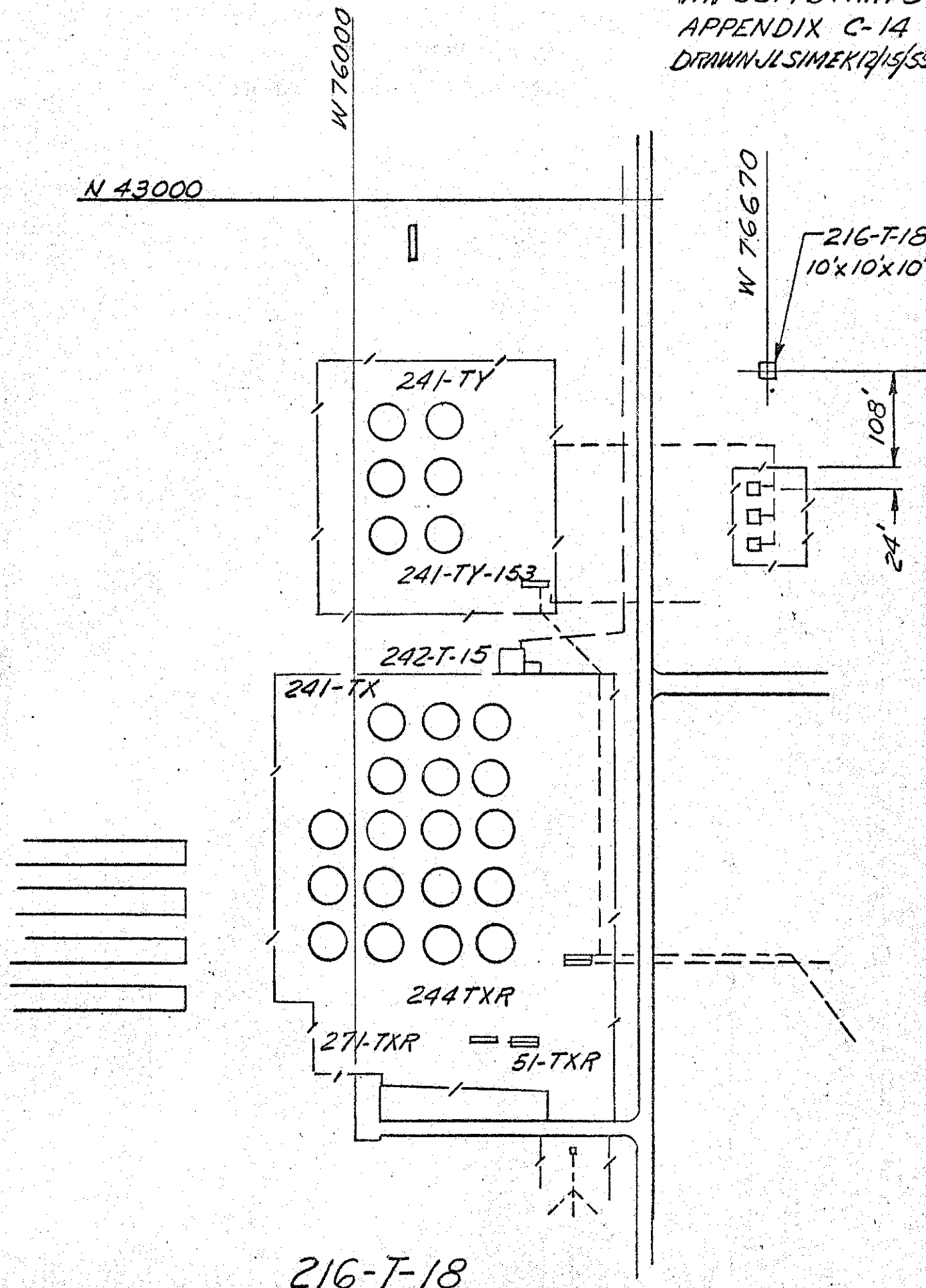


216-T-18
M2600-SHT 11

HW 55176-PART 5
APPENDIX C-15
DRAWN JLSIMEK 12/16/5

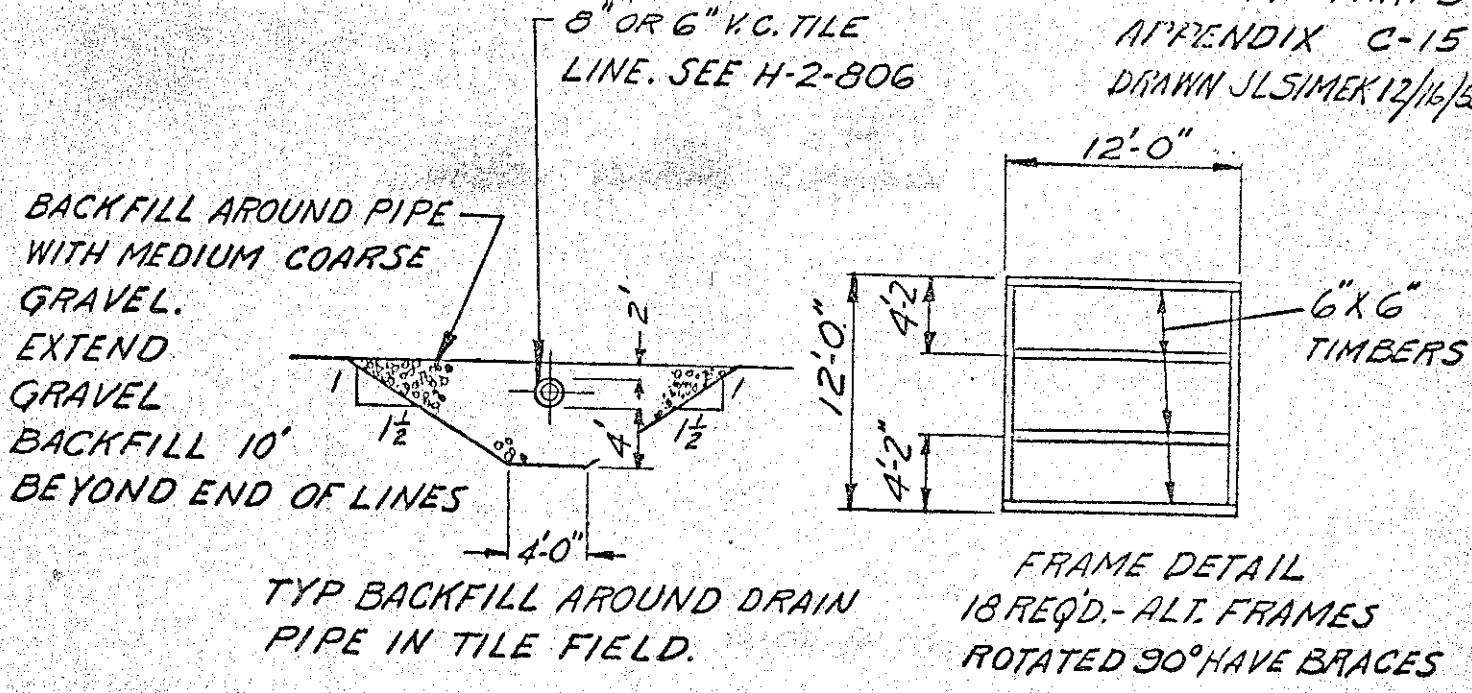


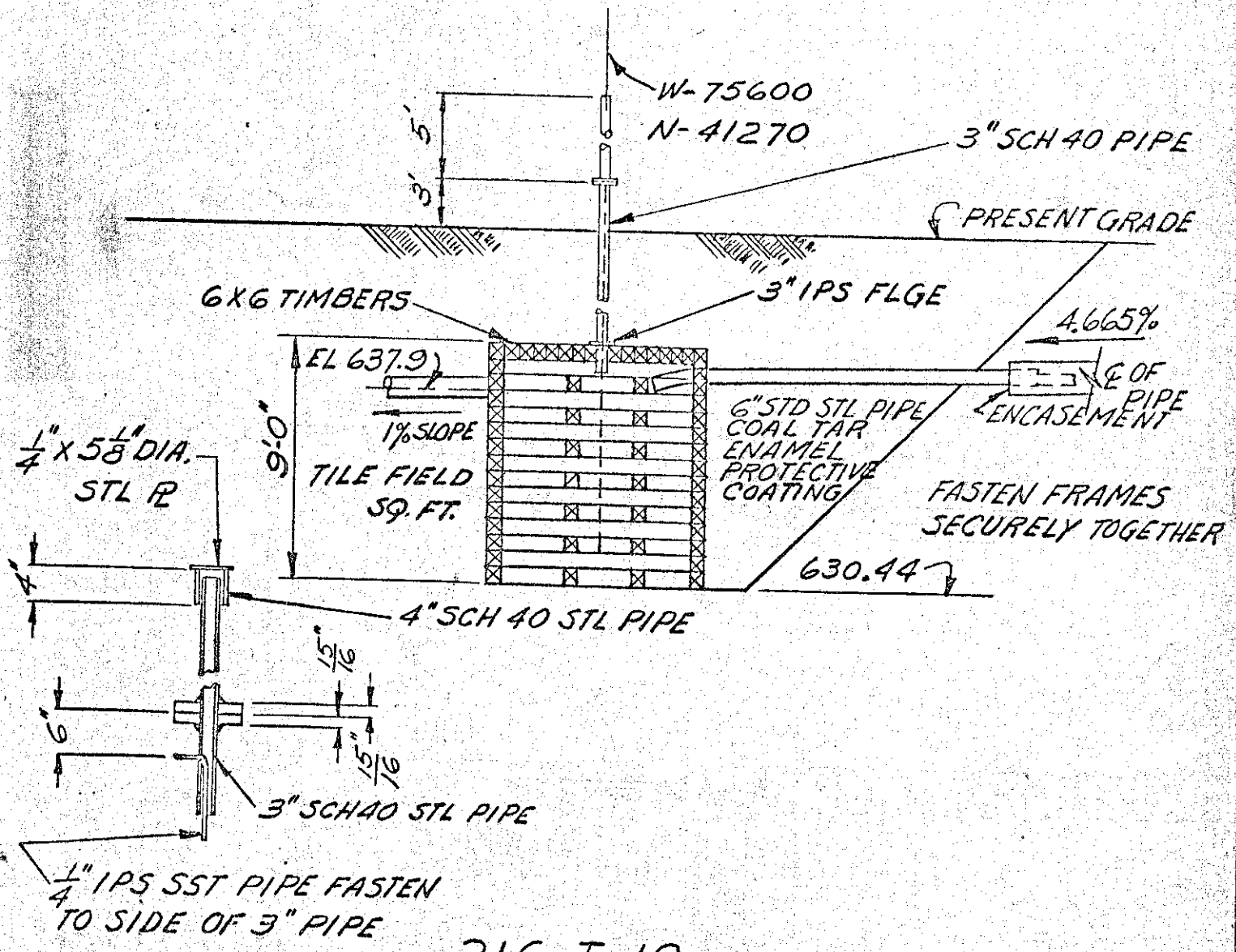


216-T-19

H-2-806
H-2-821

16

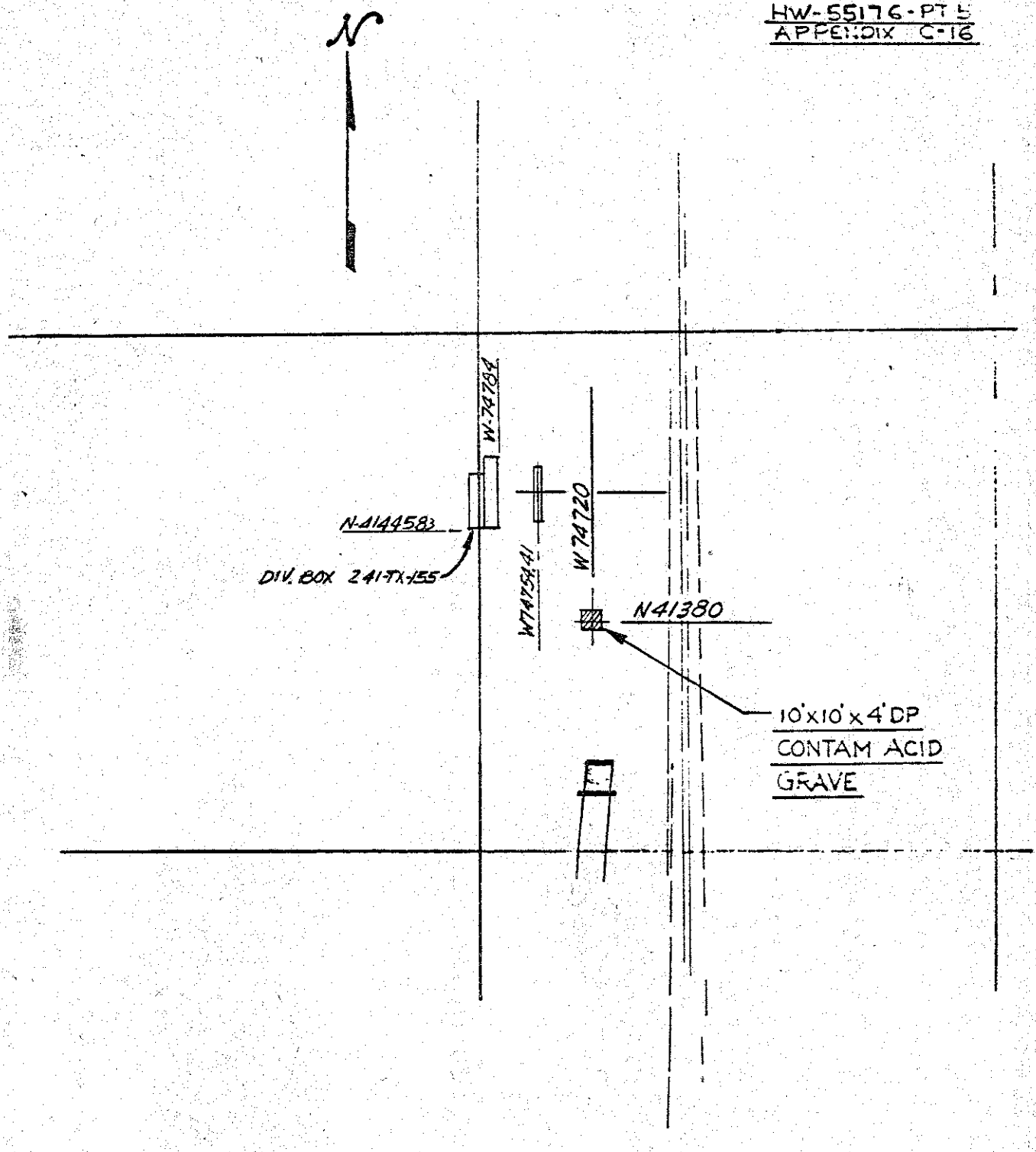


TAKEN FROM M 2892-SHT 14

216-T-20

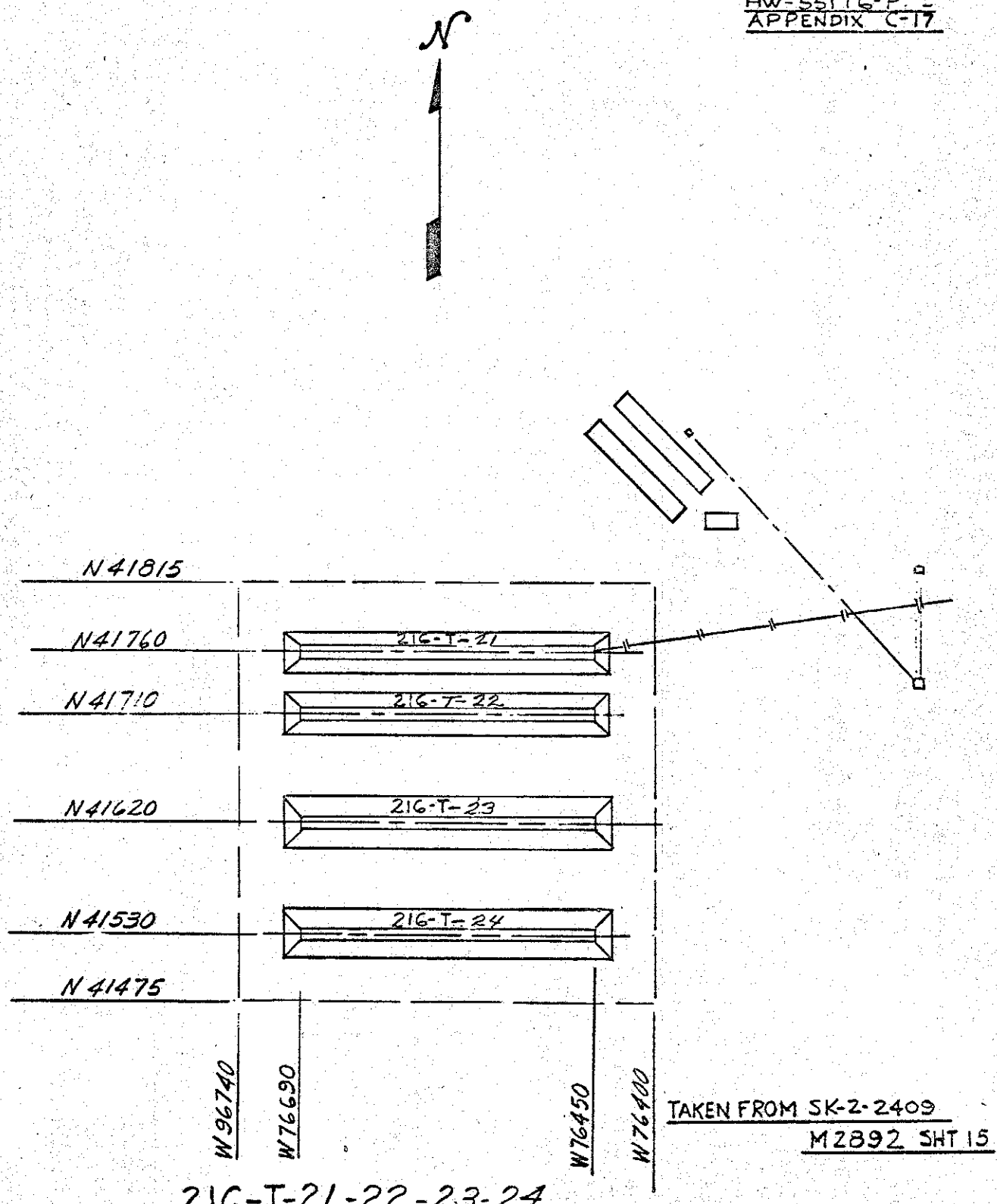


TAKEN FROM SK-2-2409
M2892 SHT 15

216-T-21-22-23-24

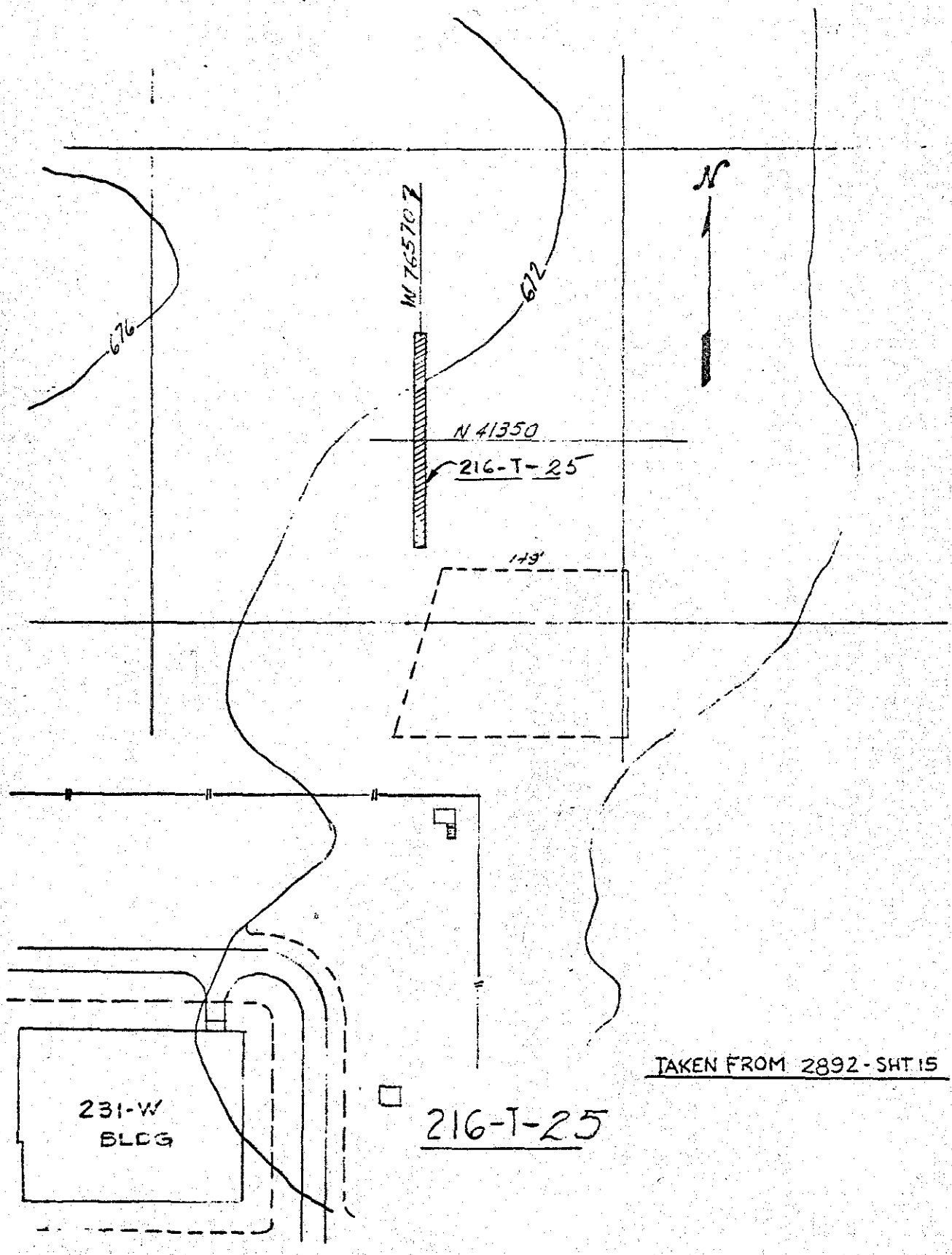


TAKEN FROM 2892-SHT 15

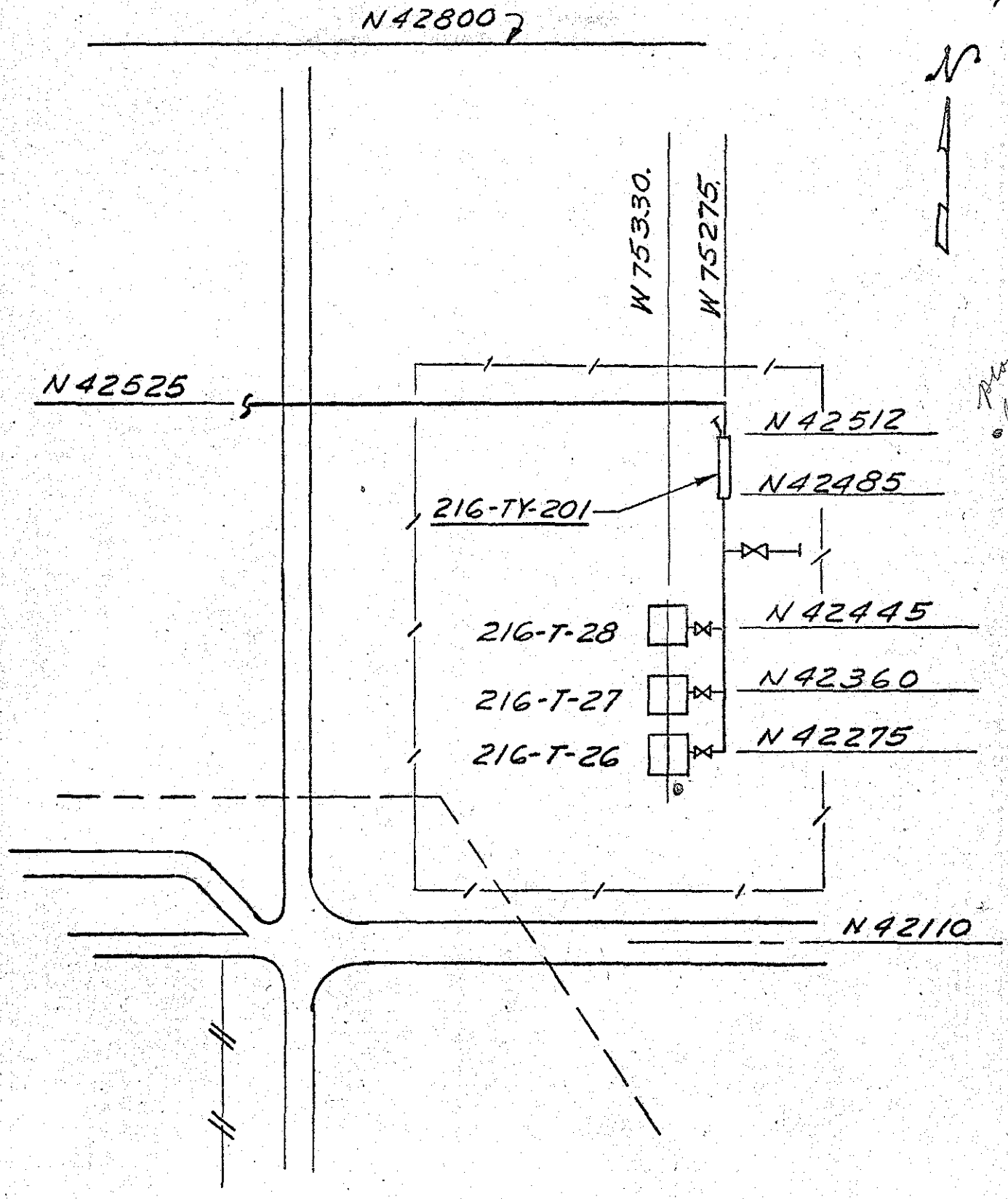


216-T-26-27-28
H-2-2733

HW-55176-PT 5
APPENDIX C-20
SHT. NO. 2
10-12-59

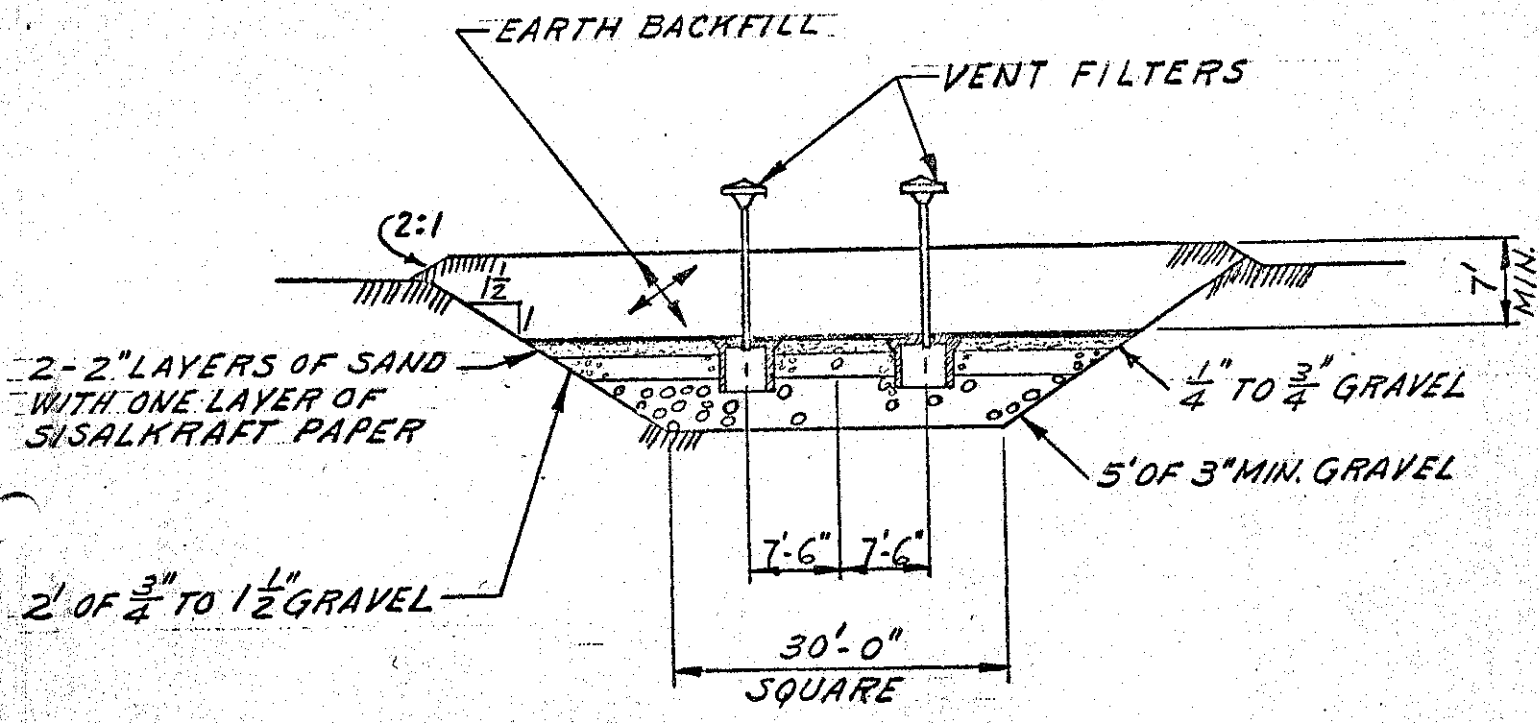




216-T-26, T-27, T-28
H-2-2735

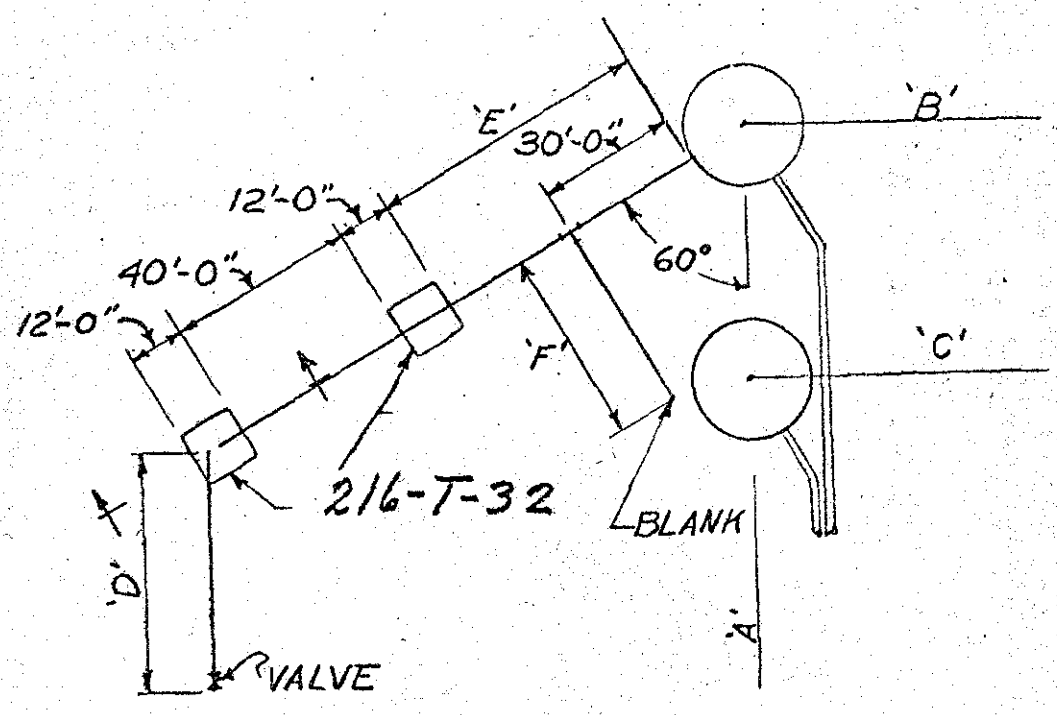


| "DIM" | 201-T | 241-B |
|---|---|---|
| A | W 75937.5 | N 45537.5 |
| B | N 43472.5 | W 52727.5 |
| C | N 43422.5 | W 52777.5 |
| D | 50'-0" | |
| E | 60'-0" | 84'-0" |
| F | 40'-0" | 25'-0" |

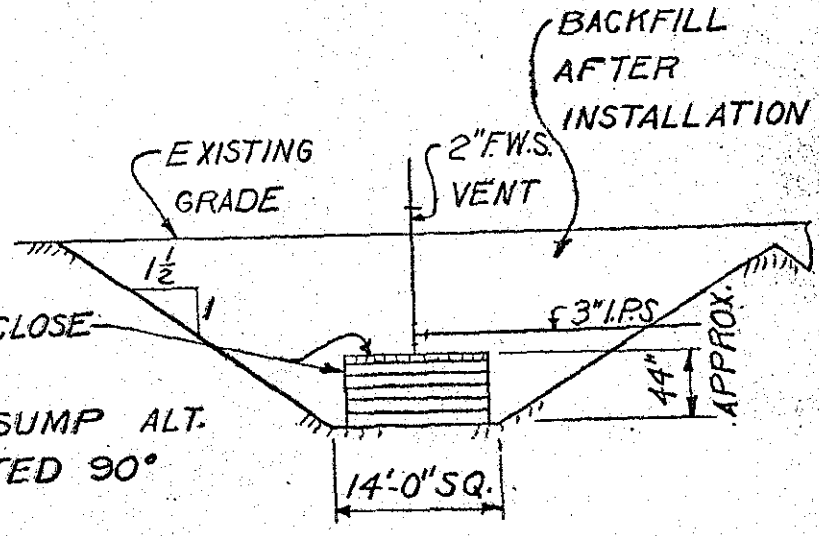


6" x 6" x 12'-0" LONG TO ENCLOSE
TOP FRAME 26-REQ'D
7 FRAMES REQ'D PER SUMP ALT.
FRAMES TO BE ROTATED 90°

TAKEN FROM H-2-558
V.W. WOOD

ADDITIONAL WASTE FACILITIES IN 200 SERIES TANKS FOR 224 "T" & "B" BLDGS.

HW-55176-PT V
APPENDIX D

216-T-1
216-T-2
216-T-3
216-T-4
216-T-5
216-T-6
216-T-7
216-T-8
216-T-9,10&11
216-T-12
216-T-13
216-T-14,15,16,17
216-T-18
216-T-19
216-T-20
216-T-21-22-23-24
216-T-25
216-T-26-27-28
216-T-29
216-T-30
216-T-31
216-T-32

N44000
N43000
N42000
N41000
W77000
W76000
W75000
W74000
W73000

RETENTION BASINS
SAND FILTER
OPERATIONS REG. SLAB
CONST. REG. SLAB
RESERVOIR 282-W
283-W
CLEARWELL
SUB STATION 252-W
COAL STORAGE
264-W
263-W
272-W
IGLOO WHSE
LIQUID WASTE DISPOSAL TRENCH
231-W

APPROVED
FOR DESIGN
NOT FOR CONSTRUCTION

| QTY. | PT. NO. | DESCRIPTION |
|---|---|---|

| No. | DESCRIPTION | REV. BY DATE | APP'D BY | FOR | DATE |
|---|---|---|---|---|---|
| 1. | (c) ADDED T-31 - ZONE F-5<br>(b) ADDED T-30 - ZONE T-8<br>(a) ADDED T-29 - ZONE 10-G<br>(d) DELETED T-29-30-31 - ZONE F-D | RAJ 12/14/59<br>RAJ 12-21-59 | F. Dowd | P.D.D. | 12/21/59 |

REVISIONS

DWG. NO. SK-2-17813 | SHEET No. — | SHEETS — | REV. NO. —

CLASSIFICATION: NONE
CLASSIFIED BY: D. Worley
DATE 4-24-58

SCALE:
DRAWN: Edward J. Simek DATE 3-19-58
CHECKED DATE
ISSUED DATE
DES. ENG. UNIT
INST. NO. 782
PROJECT NO.

APPROVALS

| BY | FOR | DATE |
|---|---|---|
| F. Dowd | P.D.D. | 10/19/59 |

U. S. ATOMIC ENERGY COMMISSION
HANFORD ATOMIC PRODUCTS OPERATION
0400 GENERAL ELECTRIC

# "T" PLANT
# LIQUID WASTE DISPOSAL SITES
## 216-T-SERIES

| REF. No. | DWG. NO. | DRAWING TITLE |
|---|---|---|
| | | REFERENCE DRAWINGS |

NEXT USED ON

BLDG. NO. 2167 | DWG. NO. SK-2-17813 | SHT. No. — | SHEETS —

B PLANT

UNCLASSIFIED
(CLASSIFICATION)

GENERAL ELECTRIC

HANFORD ATOMIC PRODUCTS OPERATION - RICHLAND, WASHINGTON

DOCUMENT NO.
HW-55176, Part VI

COPY NO.

TITLE

INDEX OF CPD CRIB BUILDING NUMBERS
DESIGNS OF CPD RADIOACTIVE LIQUID WASTE
DISPOSAL SITES

DATE
June 18, 1958

ISSUING FILE

AUTHOR

V. W. Wood

| ROUTE TO | PAYROLL NO. | LOCATION | FILES ROUTE DATE | SIGNATURE AND DATE |
|---|---|---|---|---|
| WA ~~[illegible]~~ | | ~~[illegible]~~ | | |
| | | | | |
| | | | | |
| | | | | |
| | | | | |
| | | | | |
| | | | | |
| | | | | |
| | | | | |
| | | | | |
| | | | | |
| | | | | |
| | | | | |
| | | | | |
| | | | | |

C-1899-MS (5 - 56)

UNCLASSIFIED
(CLASSIFICATION)

TO BE USED ON UNCLASSIFIED AND OFFICIAL USE ONLY DOCUMENTS

# INDEX OF CPD CRIB BUILDING NUMBERS DESIGNS OF CPD RADIOACTIVE LIQUID WASTE DISPOSAL SITES

## Part VI of VII Parts
## Process Technology - Study Report

by

V. W. Wood
Radiological Design and Development
Facilities Engineering Operation
CHEMICAL PROCESSING DEPARTMENT

June 18, 1958

## D I S T R I B U T I O N

CR Bergdahl
JM Bernard
WG Browne
E Doud
J Durbin
JB Fecht
DR Gustavson
CT Groswith
WA Haney
JF Honstead
IM Jacques
EB Jackson
CE Kent
TG LaFollette
CE Linderoth
WN Mobley
HE Parker
HF Peterson
DW Pearce
OH Pilkey
EL Reed
RA Roberts
HP Shaw
ML Short
VW Wood
300 Files

# INDEX OF CPD CRIB BUILDING NUMBERS DESIGNS OF CPD RADIOACTIVE LIQUID WASTE DISPOSAL SITES

Part VI of VII Parts
Process Technology - Study Report

## INTRODUCTION

During the fourteen years or more which the separations areas have operated, many sites have been used for the disposal of radioactive liquid wastes. Various methods have been used in assigning building numbers to these sites and, in a number of cases, changes have been made which have brought about some confusion. One of the reasons being some currently used building numbers do not agree with the numbers existing on design prints for the facilities. Reference (2) was an effort to establish a listing of the liquid waste disposal sites. It required considerable time and research to locate information concerning these sites.

Many varied designs have been used for the disposal of radioactive liquid wastes. Reverse wells, trenches, cribs or caverns, etc., have been used. Specific information on these facilities is often difficult to obtain for in some instances they were constructed on work orders with no records being retained on the design. In general, the design on each facility has been different. This has made it extremely difficult for people to have a good working knowledge of the various waste disposal sites.

## PURPOSE

The purpose of this report (Part VI) is to provide a ready reference of the "B" Plant liquid waste disposal sites as well as a compilation of sketches showing the basic information on the design of each facility.

Another objective is to establish a simplified and uniform numbering system. Still another objective is to provide an up-to-date tabulation. Subsequent parts of this report will provide information on cribs for other areas.

## SUMMARY AND CONCLUSIONS

All radioactive liquid waste disposal sites should have the 216 Building number designation. These should be further grouped by giving all such sites for Purex a prefix of 216-A. Other major series would be 216-S for Redox; 216-T for "T" Plant; 216-B for "B" Plant; 216-U for "U" Plant and 216-Z for "Z" Plant.

The numbering list in "Official Hanford Works Building List - Specification HW-5000" by Engineering Files - Construction Engineering Operation should be revised to more closely follow the above numbering system.

RECOMMENDATIONS

It is recommended that the following action be taken:

1. All groups and services referring to the "B" Area cribs or report data concerning them should use the index numbering system as presented in this report. In the case of B Plant this means several changes. See cross reference, page 4.

2. That all drawings concerning these disposal sites, including maps, be revised to show the proper locations and numbers for these cribs.

3. Any suggestions for improving the usefulness of this report should be referred to the author.

DISCUSSION

When all seven parts of the report are completed, and the work outlined in the report is completed, much confusion will be eliminated and more people will be better informed on the design of each waste disposal facility. The report will provide a firm basis for future building number assignments.

While some sincere efforts have been made to try and keep a methodical system for recording waste disposal sites, a number of problems have developed, for example, HW-5000, Sheet 29 of 50, lists only eight cribs in the 216-S series. Also reference 2 has assigned numbers which do not agree with the crib numbers assigned on many drawings.

As indicated earlier, the use of the crib index, as presented in this report should be very easy. In addition, information is presented which is very difficult to locate in the records and in some cases it is not available in the records.

REFERENCES

1. HW-5000, "Official Hanford Works Building List - Specification HW-5000" by Engineering Files - Construction Engineering Operation.

2. HW-43121, "Tabulation of Radioactive Liquid Waste Disposal Facilities by HV Clukey dated May 10, 1956.

3. HW-33305, "Tabulation of Radioactive Liquid Waste Disposal Facilities" by HV Clukey dated October 8, 1954.

4. HW-41535, "Uncoffined Underground Radioactive Waste and Contamination in the 200 Areas" by KR Heid dated January 17, 1956.

## CROSS REFERENCE
## "B" AREA RADIOACTIVE LIQUID WASTE DISPOSAL SITES

| Suggested Crib No. | Number Listed in HW-5000 | Number Listed in HW-43121 | Number Used On Drawings or Original Number | Remarks |
|---|---|---|---|---|
| 216-B-1 | 216-B-1 | None | 216-B-1 | H-2-2933 |
| 216-B-2 | None | 216-B-2 | None | 'B' Plant Ditch |
| 216-B-3 | None | 216-B-3 | None | 'B' Plant Swamp |
| 216-B-4 | None | 216-B-4 | None | French Drain |
| 216-B-5 | None | 216-B-5 | 241-B-361 | Reverse Well |
| 216-B-6 | None | 216-B-6 | 222-B-110 | Reverse Well |
| 216-B-7a & b | 241-B-1 & 2 | 216-B-7 | 241-B-1 & 2 | |
| 216-B-8 | 241-B-3 | 216-B-8 | 241-B-3 | Crib & Tile Field |
| 216-B-9 | 216-361-B | 216-B-9 | 241-B-361 | |
| 216-B-10a & b | 222-B-1 & 2 | 216-B-10 | 222-B-1 & 2 | |
| 216-B-11a & b | 242-B-1 & 2 | 216-B-11 | 242-B-1 & 2 | |
| 216-B-12 | 216-ER | 216-B-12 | 216-ER-1, 2 & 3 | |
| 216-B-13 | 291-B | 216-B-13 | | French Drain |
| 216-B-14 | 216-BC-1 | 216-BC-1 | 216-BC-1 | H-2-2907 |
| 216-B-15 | 216-BC-2 | 216-BC-2 | 216-BC-2 | H-2-2907 |
| 216-B-16 | 216-BC-3 | 216-BC-3 | 216-BC-3 | H-2-2907 |
| 216-B-17 | 216-BC-4 | 216-BC-4 | 216-BC-4 | H-2-2907 |
| 216-B-18 | 216-BC-5 | 216-BC-5 | 216-BC-5 | H-2-2907 |
| 216-B-19 | 216-BC-6 | 216-BC-6 | 216-BC-6 | H-2-2907 |
| 216-B-20 | 216-BC-7 | None | 216-BC-7 | H-2-3203 |
| 216-B-21 | 216-BC-8 | None | 216-BC-8 | H-2-3203 |
| 216-B-22 | 216-BC-9 | None | 216-BC-9 | H-2-3203 |
| 216-B-23 | 216-BC-10 | None | 216-BC-10 | H-2-3232 |
| 216-B-24 | 216-BC-11 | None | 216-BC-11 | H-2-3232 |
| 216-B-25 | 216-BC-12 | None | 216-BC-12 | H-2-3232 |
| 216-B-26 | 216-BC-13 | None | 216-BC-13 | H-2-3232 |
| 216-B-27 | 216-BC-14 | None | 216-BC-14 | H-2-3232 |
| 216-B-28 | 216-BC-15 | None | 216-BC-15 | H-2-3232 |
| 216-B-29 | 216-BC-16 | None | 216-BC-16 | H-2-3336 |
| 216-B-30 | 216-BC-17 | None | 216-BC-17 | H-2-3336 |
| 216-B-31 | 216-BC-18 | None | 216-BC-18 | H-2-3336 |
| 216-B-32 | 216-BC-19 | None | 216-BC-19 | H-2-3336 |
| 216-B-33 | 216-BC-20 | None | 216-BC-20 | H-2-3336 |
| 216-B-34 | 216-BC-21 | None | 216-BC-21 | H-2-3336 |
| 216-B-35 | None | 216-BX-1 | 216-BX-1 | |
| 216-B-36 | None | 216-BX-2 | 216-BX-2 | |
| 216-B-37 | None | 216-BX-3 | 216-BX-3 | |
| 216-B-38 | None | 216-BX-4 | 216-BX-4 | |
| 216-B-39 | None | 216-BX-5 | 216-BX-5 | |
| 216-B-40 | None | 216-BX-6 | 216-BX-6 | |

| Suggested Crib No. | Number Listed in HW-5000 | Number Listed in HW-43121 | Number Used On Drawings or Original Number | Remarks |
|---|---|---|---|---|
| 216-B-41 | None | 216-BX-7 | 216-BX-7 | |
| 216-B-42 | None | | 216-BX-8 | |
| 216-B-43 | 216-BY-1 | 216-BY-1 | 216-BY-1 | H-2-2603 |
| 216-B-44 | 216-BY-2 | 216-BY-2 | 216-BY-2 | H-2-2603 |
| 216-B-45 | 216-BY-3 | 216-BY-3 | 216-BY-3 | H-2-2603 |
| 216-B-46 | 216-BY-4 | 216-BY-4 | 216-BY-4 | H-2-2603 |
| 216-B-47 | 216-BY-5 | 216-BY-5 | 216-BY-5 | H-2-2603 |
| 216-B-48 | 216-BY-6 | 216-BY-6 | 216-BY-6 | H-2-2603 |
| 216-B-49 | 216-BY-7 | 216-BY-7 | 216-BY-7 | H-2-2603 |
| 216-B-50 | 216-BY-8 | 216-BY-8 | 216-BY-8 | H-2-2603 |
| 216-B-51 | 216-BY-9 | 216-BY-9 | 216-BY-9 | H-2-2908 |

APPENDIX

A. Explanation of Parts to the Report

Part I will cover the Purex Radioactive Liquid Waste Disposal Sites.

Part II will cover the "Z" Plant Radioactive Liquid Waste Disposal Sites.

Part III will cover the Redox Plant Radioactive Liquid Waste Disposal Sites.

Part IV will cover the "U" Plant Radioactive Liquid Waste Disposal Sites.

Part V will cover the "T" Plant Radioactive Liquid Waste Disposal Sites.

Part VI will cover the "B" Plant Radioactive Liquid Waste Disposal Sites.

Part VII will cover the "C" Plant, Hot Semi-Works, the 200 North Areas and miscellaneous.

B. Index for "B" Plant Radioactive Liquid Waste Disposal Sites.

C. Sketches of "B" Plant Waste Disposal Facilities.

D. Map of "B" Plant Sites (SK-2-17840).

# CRIB INDEX
## B PLANT

| Number | Description Appendix Sheet | Service | Use Dates From | Use Dates To | Status |
|---|---|---|---|---|---|
| 216-B-1 | None | Not built | - | | - |
| 216-B-2 | C-2 | Cooling Water and Chemical Sewer | 4/45 | - | Active |
| 216-B-3 | C-3 | Cooling Water & Chemical Sewer | 4/45 | - | Active |
| 216-B-4 | C-4 & 5 | 292-B Floor Drain | 4/45 | 12/49 | Abandoned |
| 216-B-5 | C-6 | 224-B and 5-6 Wastes | 4/45 | 10/47 | Abandoned |
| 216-B-6 | C-7 & 8 | 222-B Wastes | 4/45 | 12/49 | Abandoned |
| 216-B-7 | C-9 & 10 | 224-B Wastes & 5-6 Cell Drain | 9/46 | 1958 | Abandoned |
| 216-B-8 | C-11 & 12 | 224-B, 5-6 and 2nd Cycle Wastes | 1945 | 1952 | Abandoned |
| 216-B-9 | C-13 & 14 | 5-6 and 2nd Cycle Wastes | 8/48 | 7/51 | " |
| 216-B-10 | C-15 & 16 | 222-B and 292-B Wastes | 12/49 | 1958 | " |
| 216-B-11 | C-17 & 18 | 242-B Condensate | 12/51 | 11/54 | " |
| 216-B-12 | C-19 & 20 | U Plant Condensate | 11/52 | 1957 | " |
| 216-B-13 | C-21 & 22 | 291-B Stack Drain | 4/45 | - | Active |
| 216-B-14 | C-23, 23A & 24 | U Plant Scavenged Waste | 1/56 | 2/56 | Abandoned |
| 216-B-15 | " " " | " " " " | 4/56 | 12/57 | " |
| 216-B-16 | " " " | " " " " | 4/56 | 8/56 | " |
| 216-B-17 | " " " | Tank Farm Scavenged Waste | 1/56 | | " |
| 216-B-18 | " " " | U Plant Scavenged Waste | 3/56 | 4/56 | " |
| 216-B-19 | " " " | U Plant and Tank Farm Scavenged | 2/57 | 10/57 | " |
| 216-B-20 | C-25, 26 & 26A | " " " " " | 8/56 | 9/56 | Spec. Ret. |
| 216-B-21 | " " " | " " " " " | 9/56 | - | " " |
| 216-B-22 | " " " | " " " " " | 10/56 | - | " " |
| 216-B-23 | C-26, 27 & 28 | " " " " " | 10/56 | - | " " |
| 216-B-24 | " " " | U Plant Scavenged Waste | 10/56 | 11/56 | " " |
| 216-B-25 | " " " | " " " " | 11/56 | 12/56 | " " |
| 216-B-26 | " " " | " " " " | 12/56 | 1/57 | " " |
| 216-B-27 | " " " | " " " " | 2/57 | 4/57 | " " |
| 216-B-28 | " " " | U Plant & Tank Farm Scavenged | 4/57 | 5/57 | " " |
| 216-B-29 | C-29 & 30 | U Plant Scavenged Waste | 6/57 | - | " " |
| 216-B-30 | " | U Plant and Tank Farm Scavenged | 6/57 | - | " " |
| 216-B-31 | " | " " " " " | 7/57 | - | " " |
| 216-B-32 | " | " " " " " | 8/57 | 9/57 | " " |
| 216-B-33 | " | " " " " " | 9/57 | 10/57 | " " |
| 216-B-34 | " | " " " " " | 10/57 | 11/57 | " " |
| 216-B-35 | C-31 & 32 | 1st Cycle Supernatant | 2/54 | - | " " |
| 216-B-36 | " | " | 4/54 | - | " " |
| 216-B-37 | " | Evaporator Bottoms | 8/54 | 9/54 | " " |
| 216-B-38 | " | 1st Cycle Supernatant | 7/54 | - | " " |
| 216-B-39 | " | " | 12/53 | 11/54 | " " |
| 216-B-40 | " | " | 4/54 | 8/54 | " " |

CRIB INDEX B PLANT (cont.)

| Number | Description Appendix Sheet | Service | Use Dates From | To | Status |
|---|---|---|---|---|---|
| 216-B-41 | C-31 & 32 | 1st Cycle Supernatant | 11/54 | - | Spec. Ret. |
| 216-B-42 | " | U Plant Scavenged Waste | 2/55 | - | " " |
| 216-B-43 | C-33 | U Plant Scavenged Waste | 11/54 | - | Abandoned |
| 216-B-44 | C-33 | " | 12/54 | 3/55 | " |
| 216-B-45 | C-33 | " | 4/55 | 6/55 | " |
| 216-B-46 | C-33 | " | 9/55 | 12/55 | " |
| 216-B-47 | C-33 | " | 9/55 | - | " |
| 216-B-48 | C-33 | " | 11/55 | 2/57 | " |
| 216-B-49 | " | " | 11/55 | 12/55 | " |
| 216-B-50 | " | " | Not Used | | " |
| 216-B-51 | C-34 & 35 | Pipe Line Drain | Not Used | | Abandoned |
| 216-B-52 | C-26, 27 & 28 | Tank Farm Scavenged Waste | 12/57 | 1/58 | Spec. Ret. |

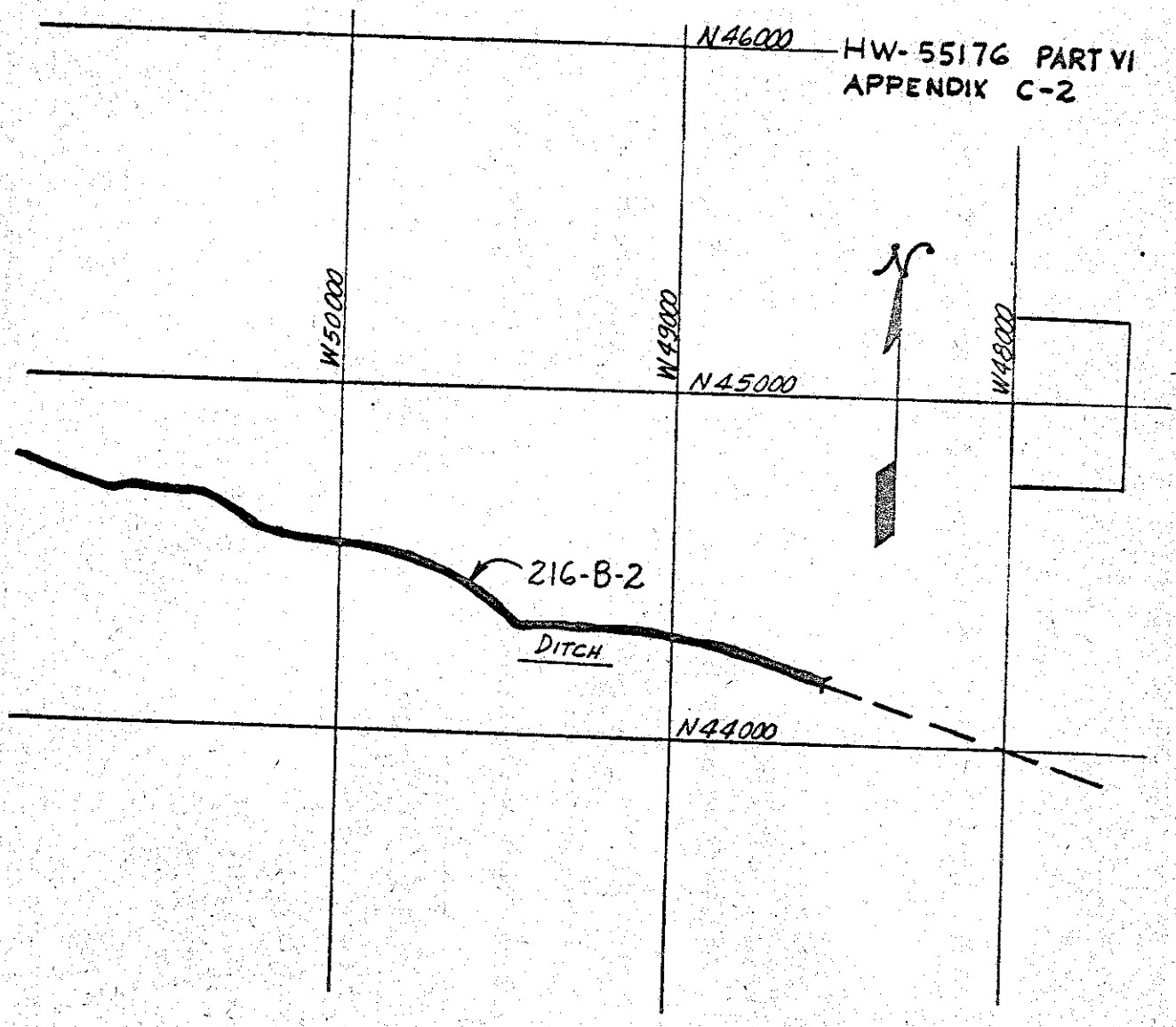
N46000
HW-55176 PART VI
APPENDIX C-2
W50000
W49000
W48000
N45000
N44000
216-B-2
DITCH

216-B-2

3

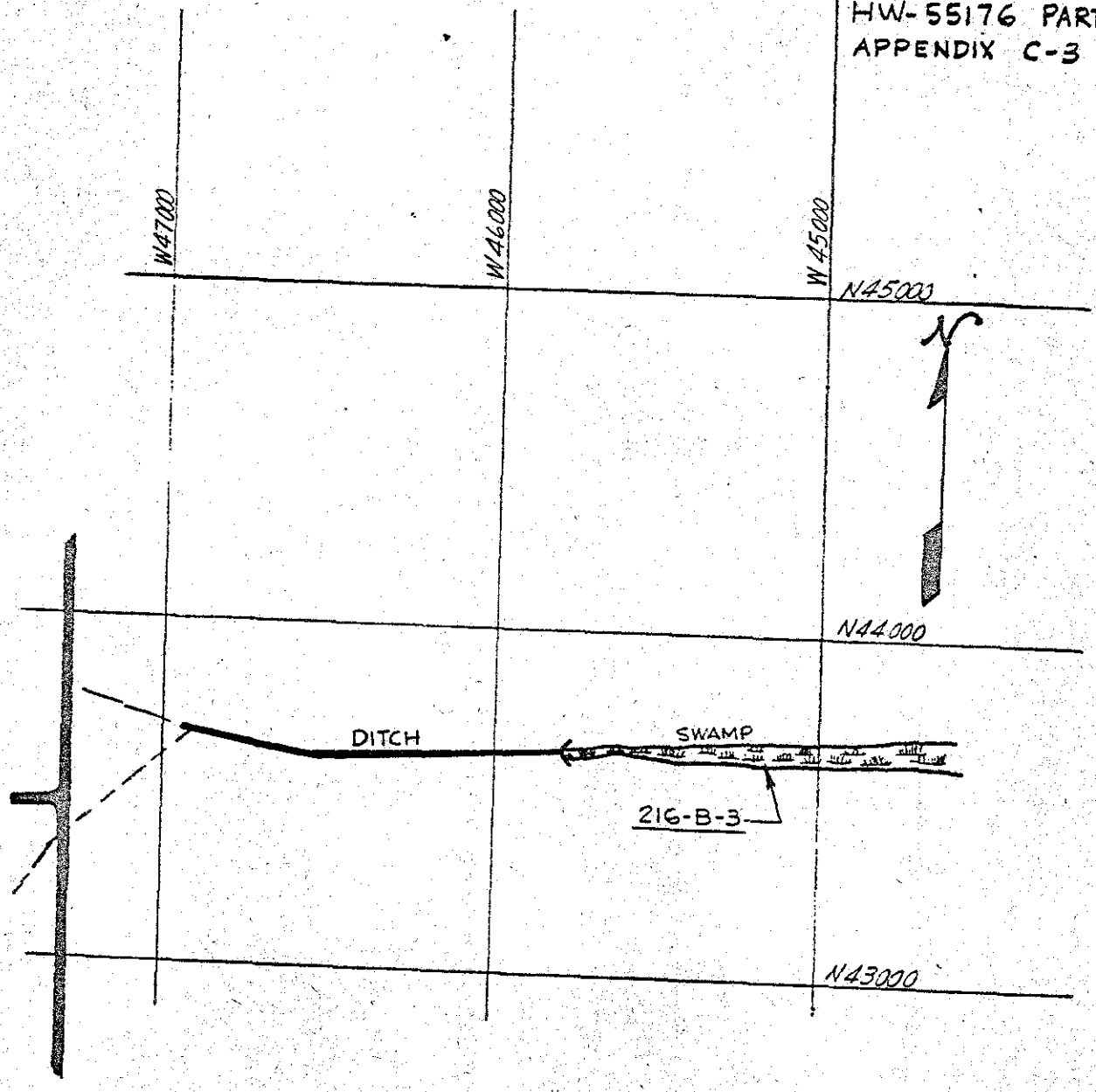
W47000
W46000
W45000
N45000
N44000
N43000
DITCH
SWAMP
216-B-3

216-B-3

4

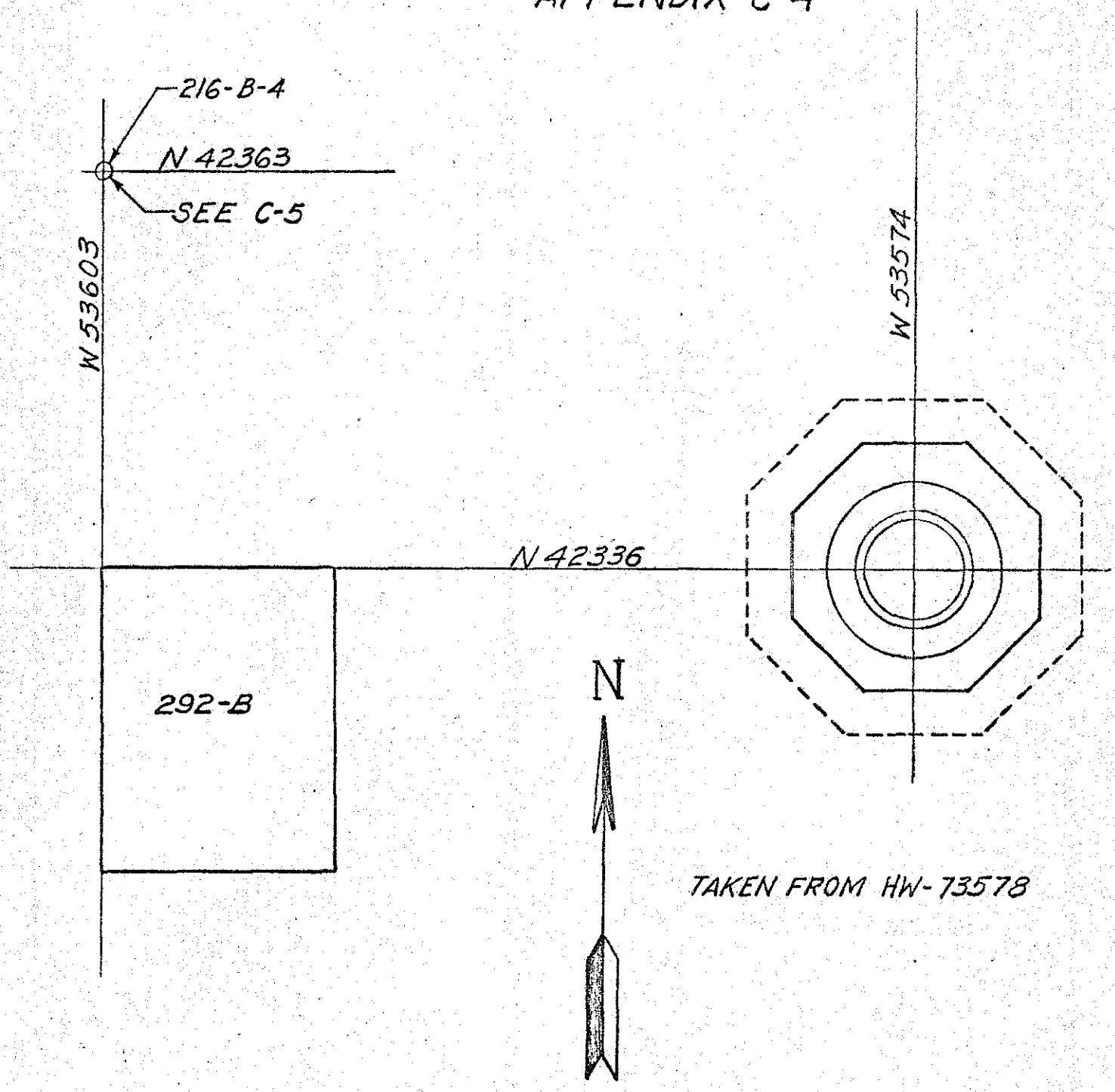
216-B-4
N 42363
SEE C-5
W 53603
W 53574
N 42336
292-B
N
TAKEN FROM HW-73578

216-B-4

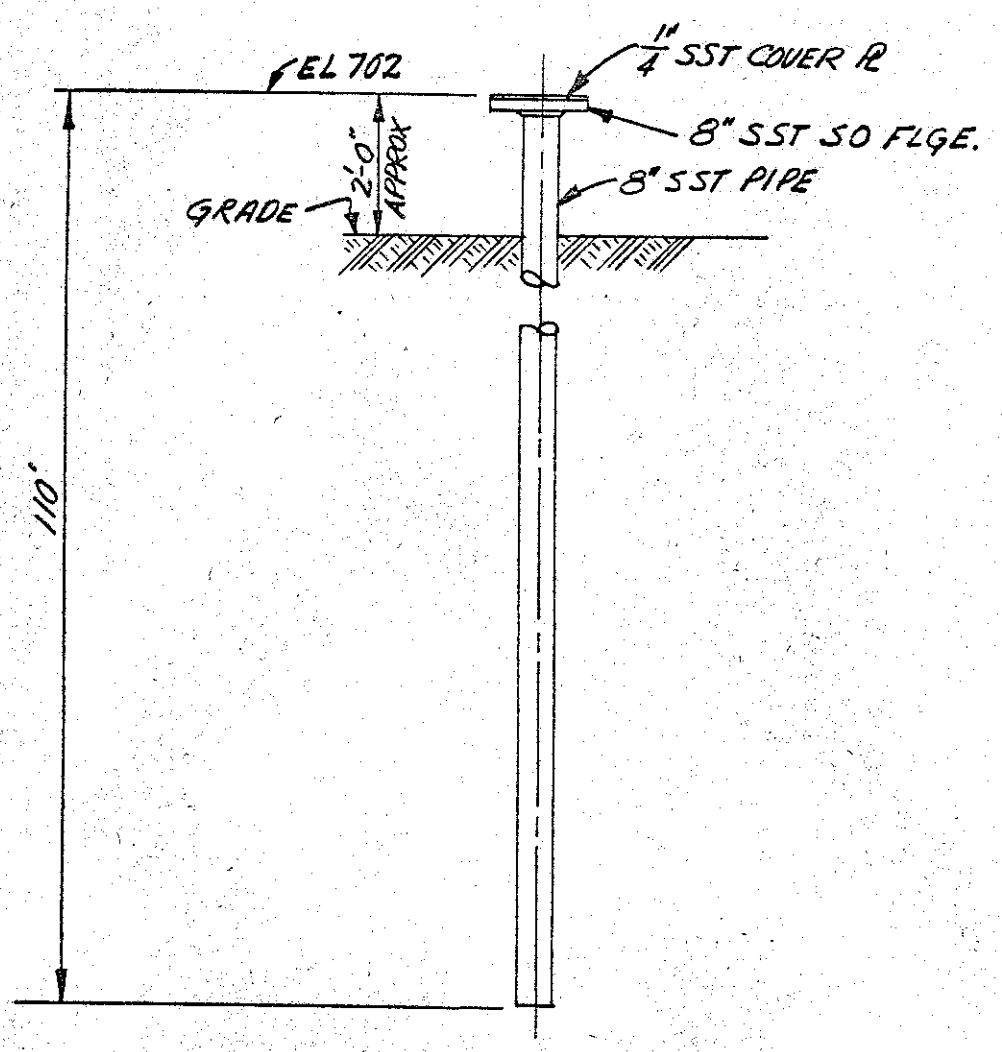


TAKEN FROM H-2-1100

216-B-4

HW-55176-PART 6
APPENDIX C-6
DRAWN JLSIMEK 12/18/5

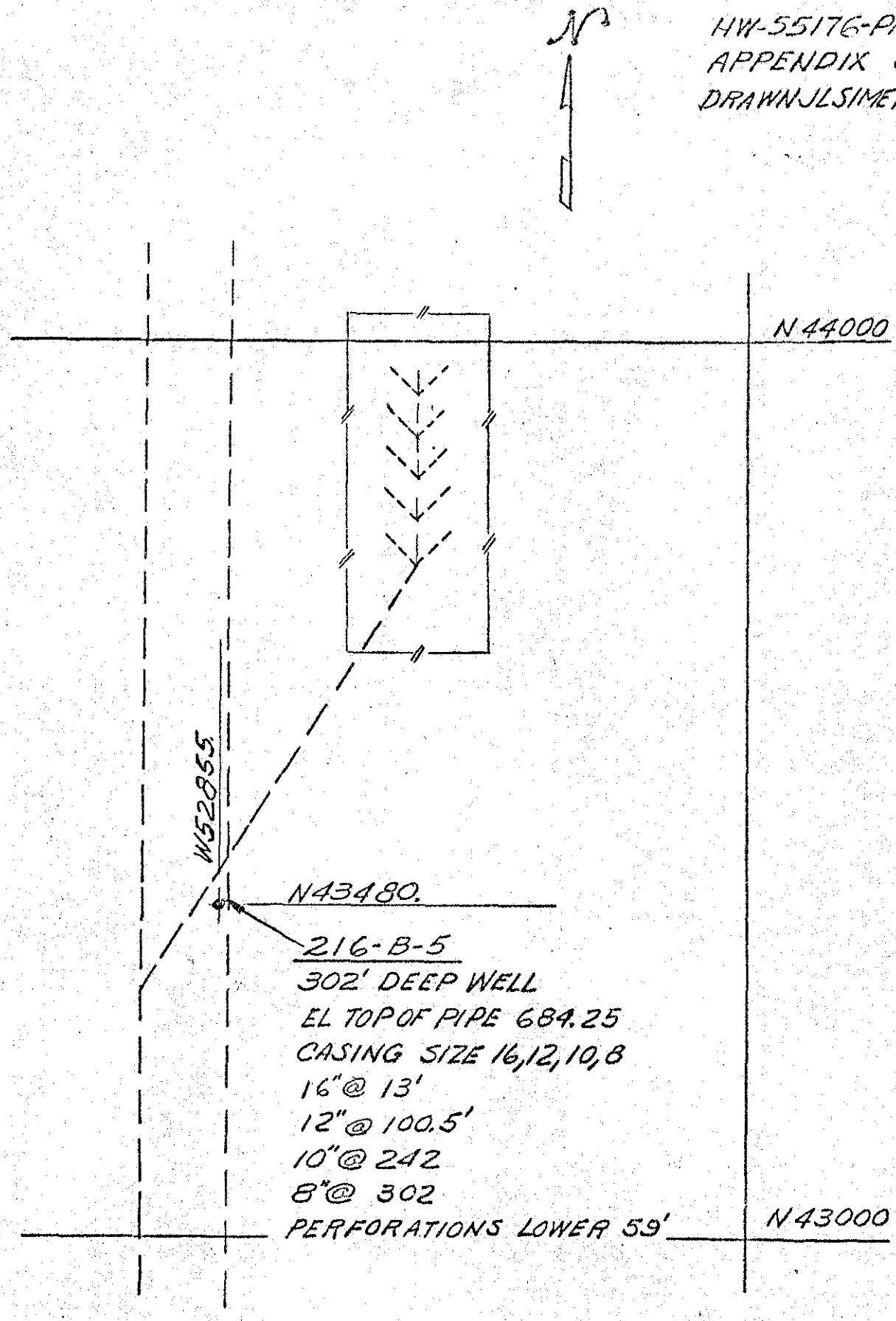


216-B-5
H-2-1123
H-2-1031

7

HW-55176-PART 6
APPENDIX C-7
DRAWN JL SIMEK 12/16/59

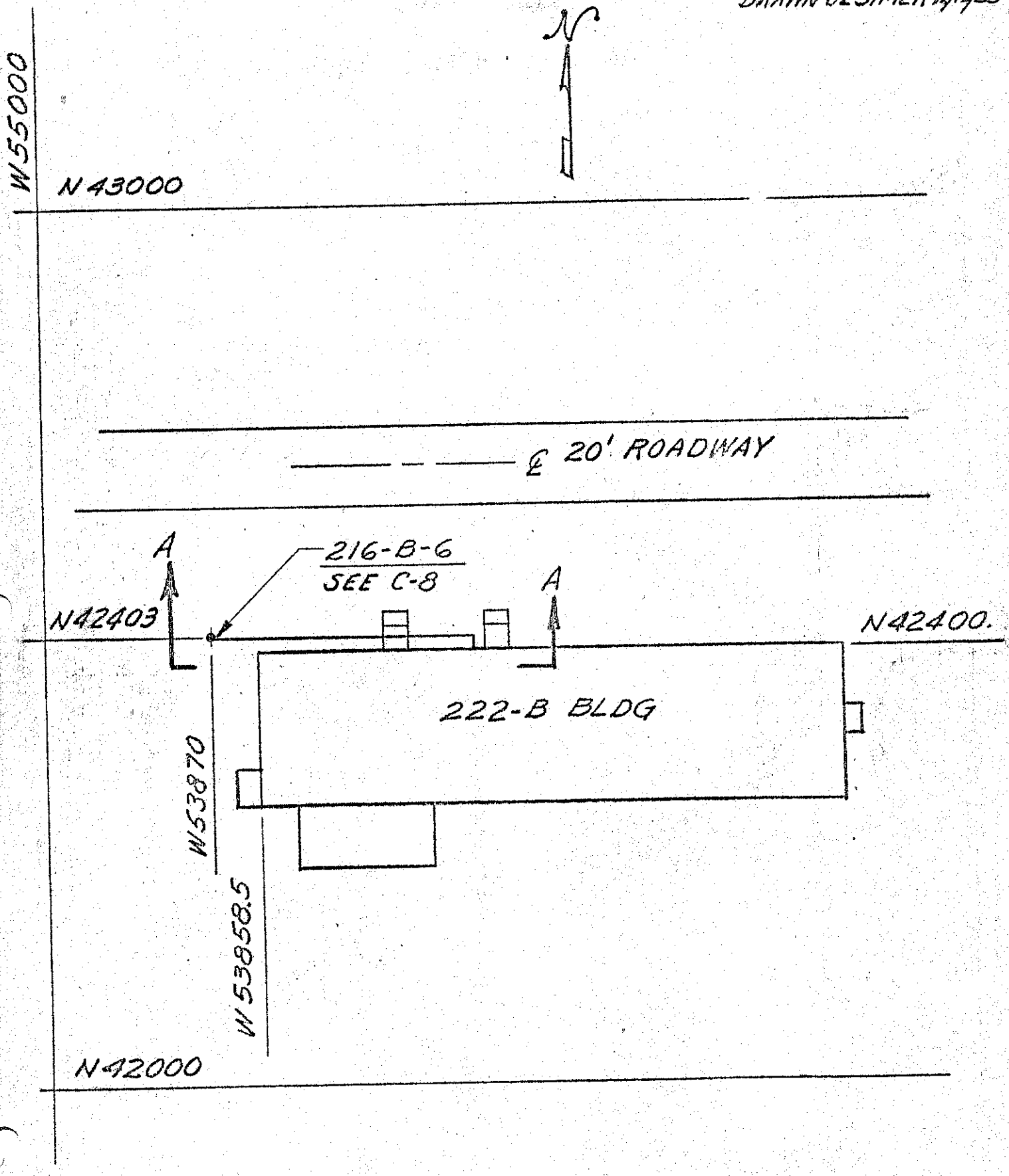


216-B-6
H-2-2431
HW 69870 SHT 3

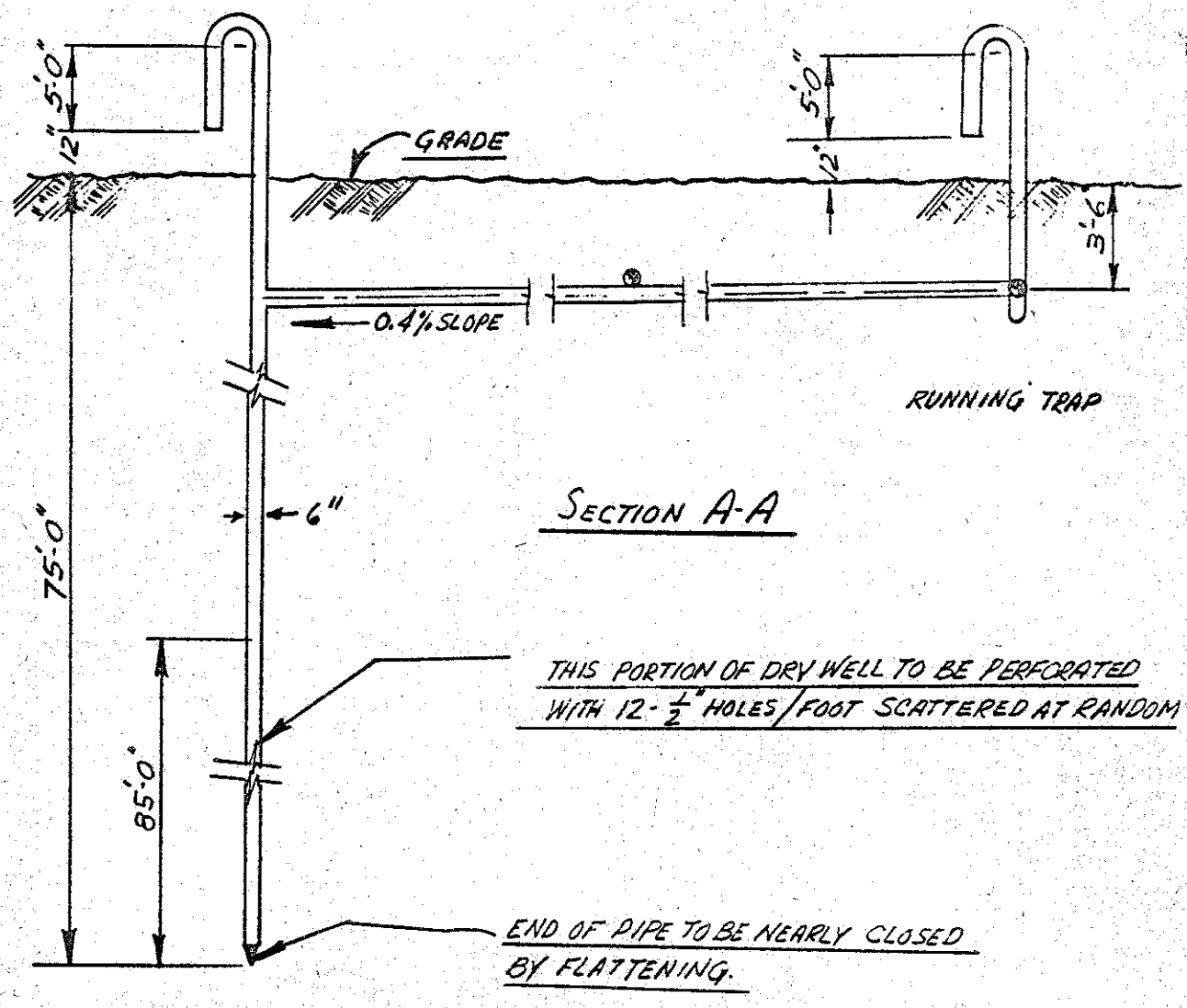


216-B-6

TAKEN FROM
HW 69870 SHT 3

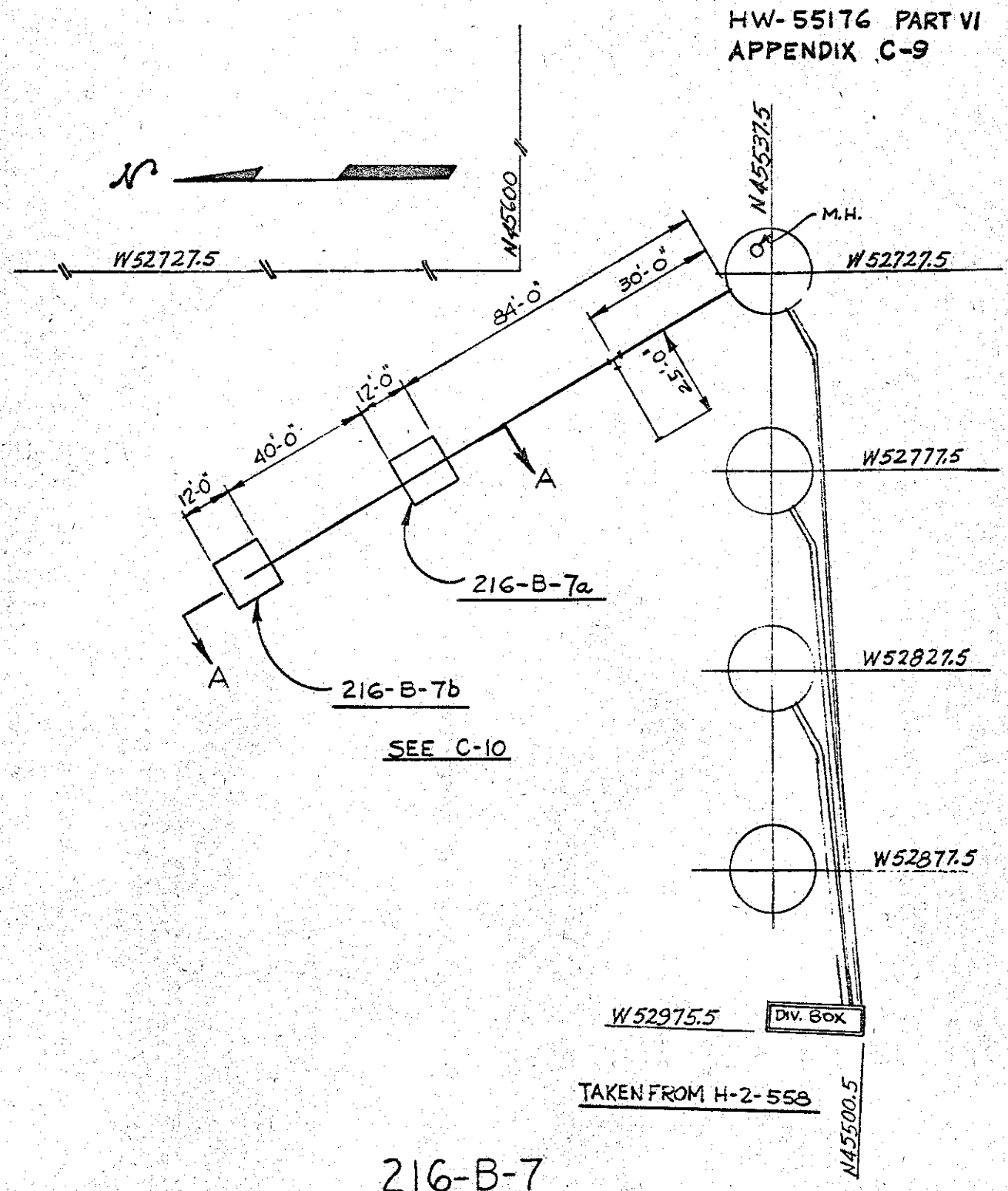
N
W52727.5
N45600
N45537.5
M.H.
W52727.5
84'-0"
30'-0"
25'-0"
12'-0"
40'-0"
12'-0"
A
A
216-B-7a
216-B-7b
SEE C-10
W52777.5
W52827.5
W52877.5
W52975.5
DIV. BOX
TAKEN FROM H-2-558
N45500.5

216-B-7

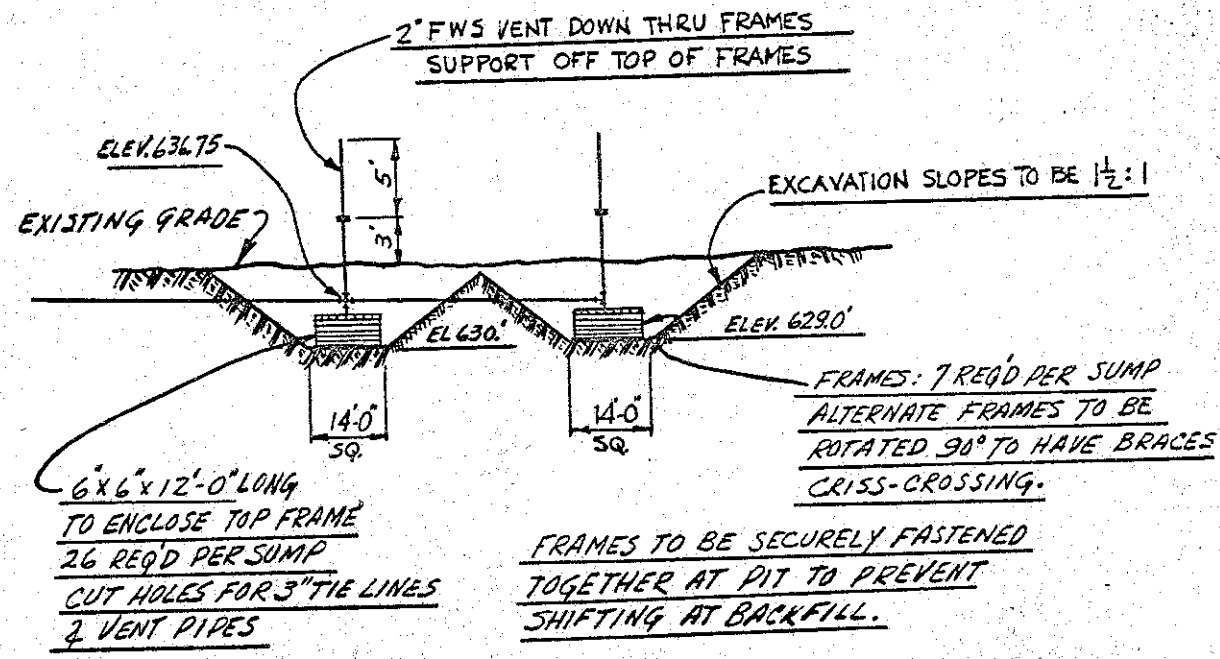
2" FWS VENT DOWN THRU FRAMES
SUPPORT OFF TOP OF FRAMES
ELEV. 636.75
5'
3'
EXISTING GRADE
EXCAVATION SLOPES TO BE 1½:1
EL 630.0'
ELEV. 629.0'
14'-0" SQ.
14'-0" SQ.
FRAMES: 7 REQ'D PER SUMP
ALTERNATE FRAMES TO BE
ROTATED 90° TO HAVE BRACES
CRISS-CROSSING.
6"x6"x12'-0" LONG
TO ENCLOSE TOP FRAME
26 REQ'D PER SUMP
CUT HOLES FOR 3" TIE LINES
& VENT PIPES
FRAMES TO BE SECURELY FASTENED
TOGETHER AT PIT TO PREVENT
SHIFTING AT BACKFILL.

216-B-7

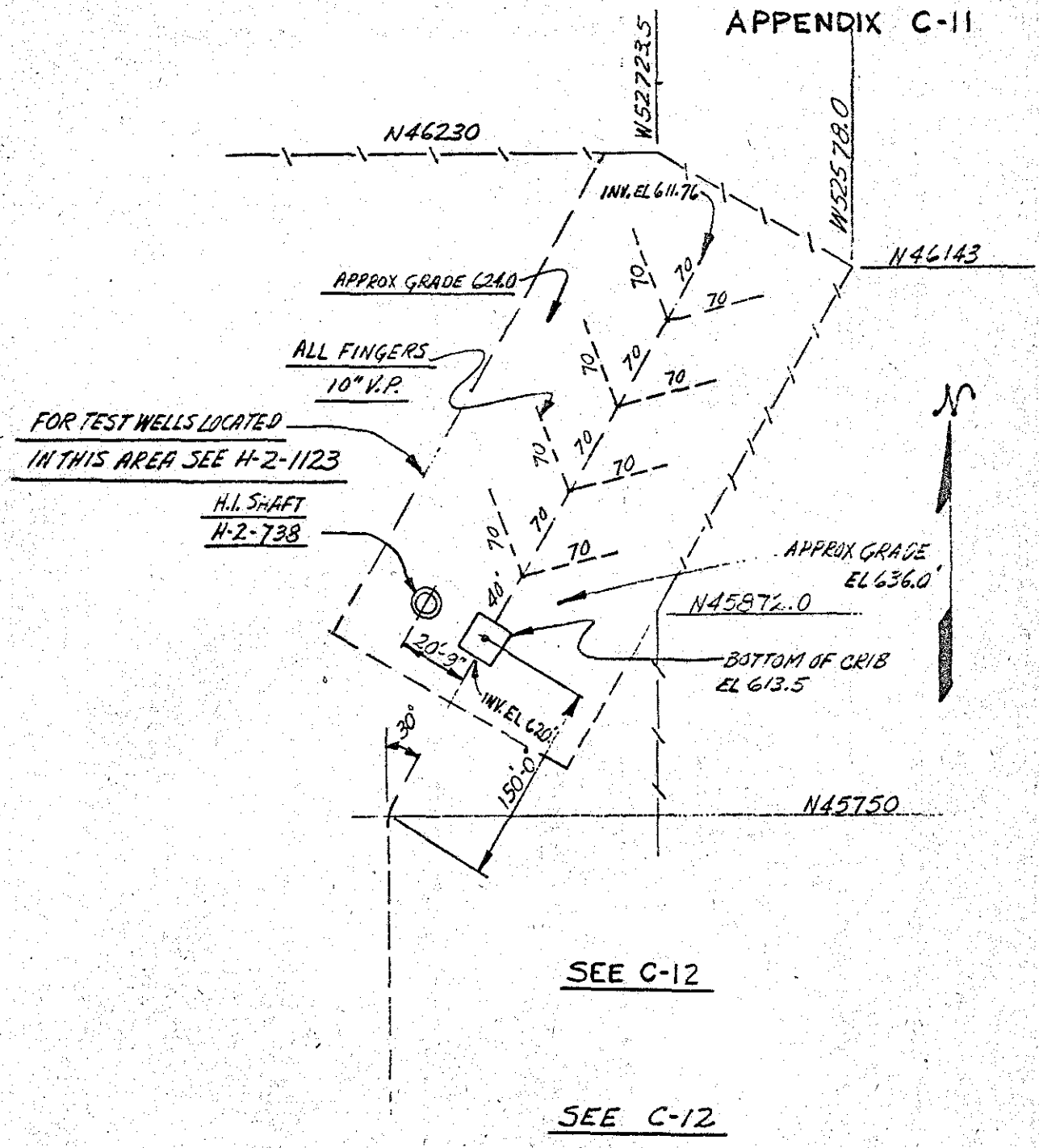


SEE C-12

SEE C-12

TAKEN FROM H-2-573

PLAN

216 B-8

12

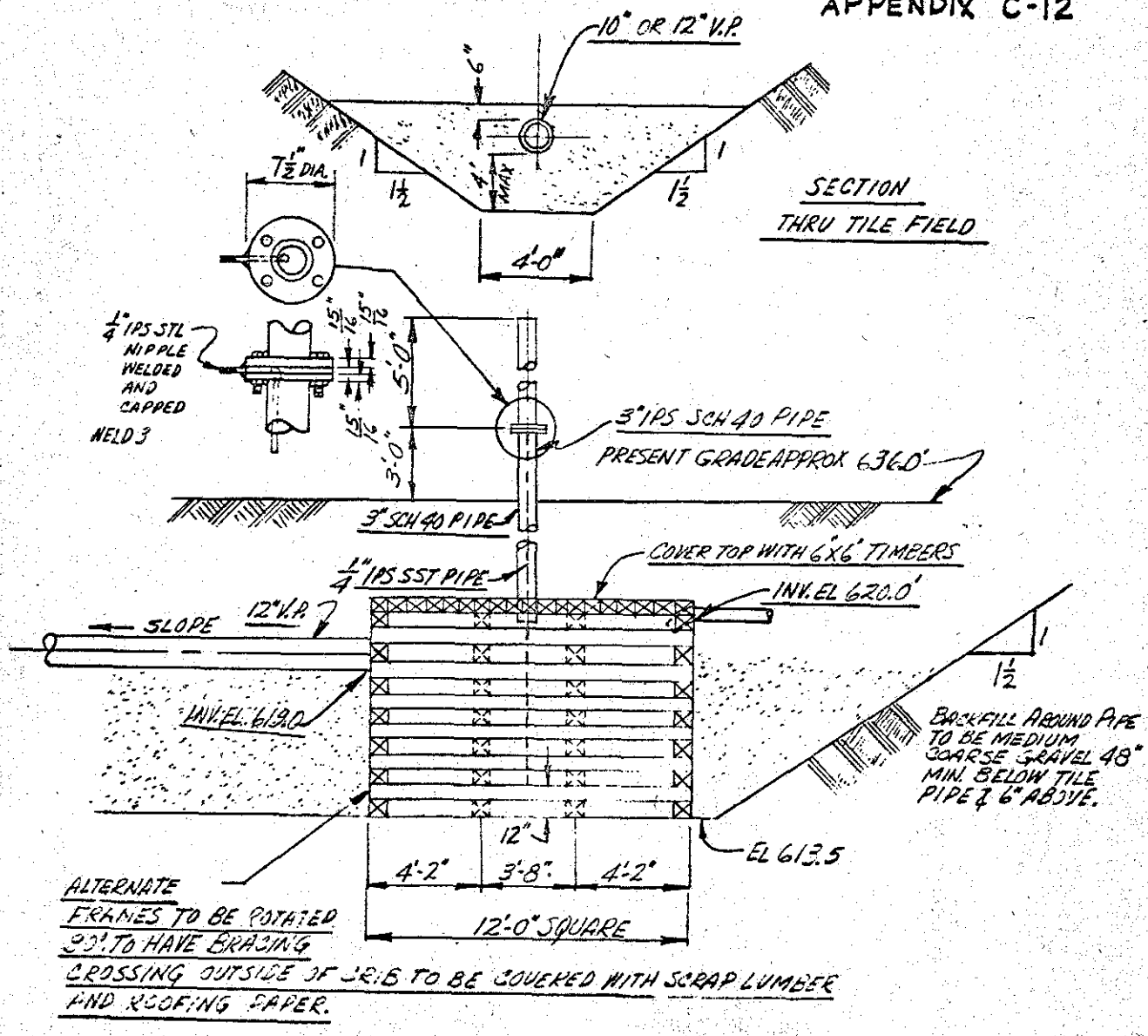


TAKEN FROM H-2-579

216-B-8

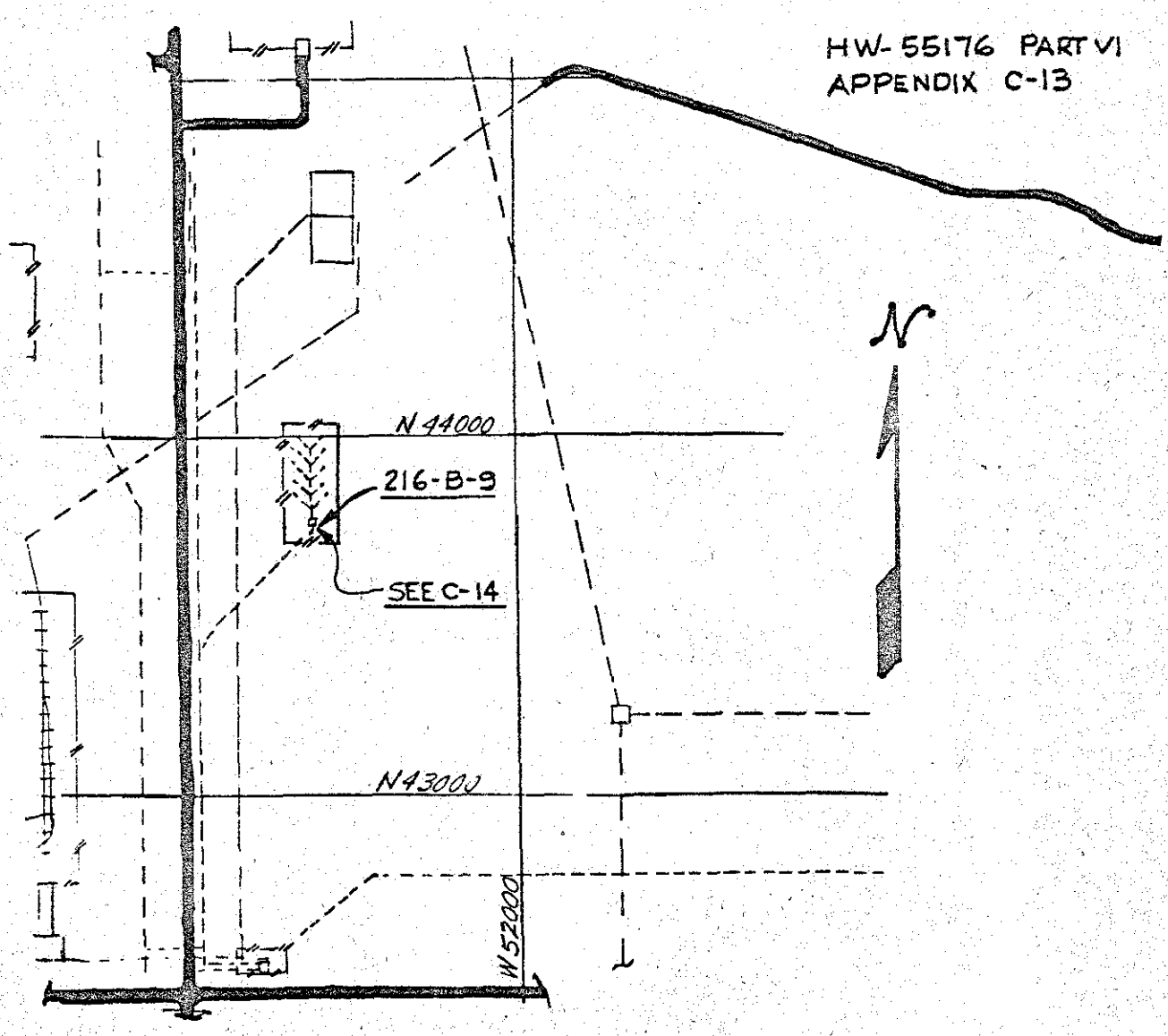


TAKEN FROM H-2-1123
H-2-1031

216-B-9

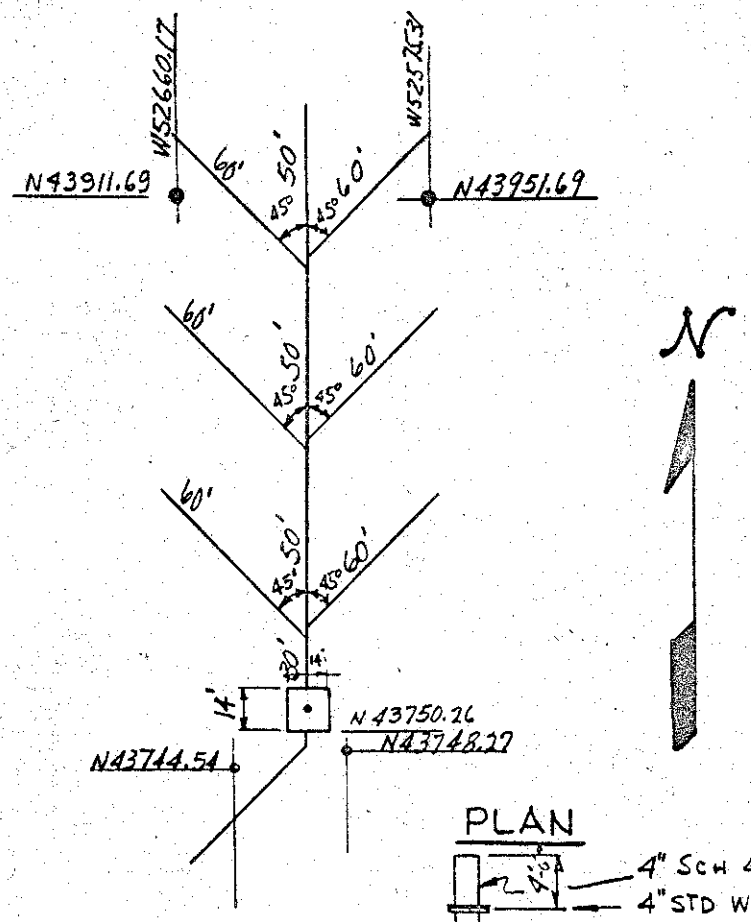


PLAN

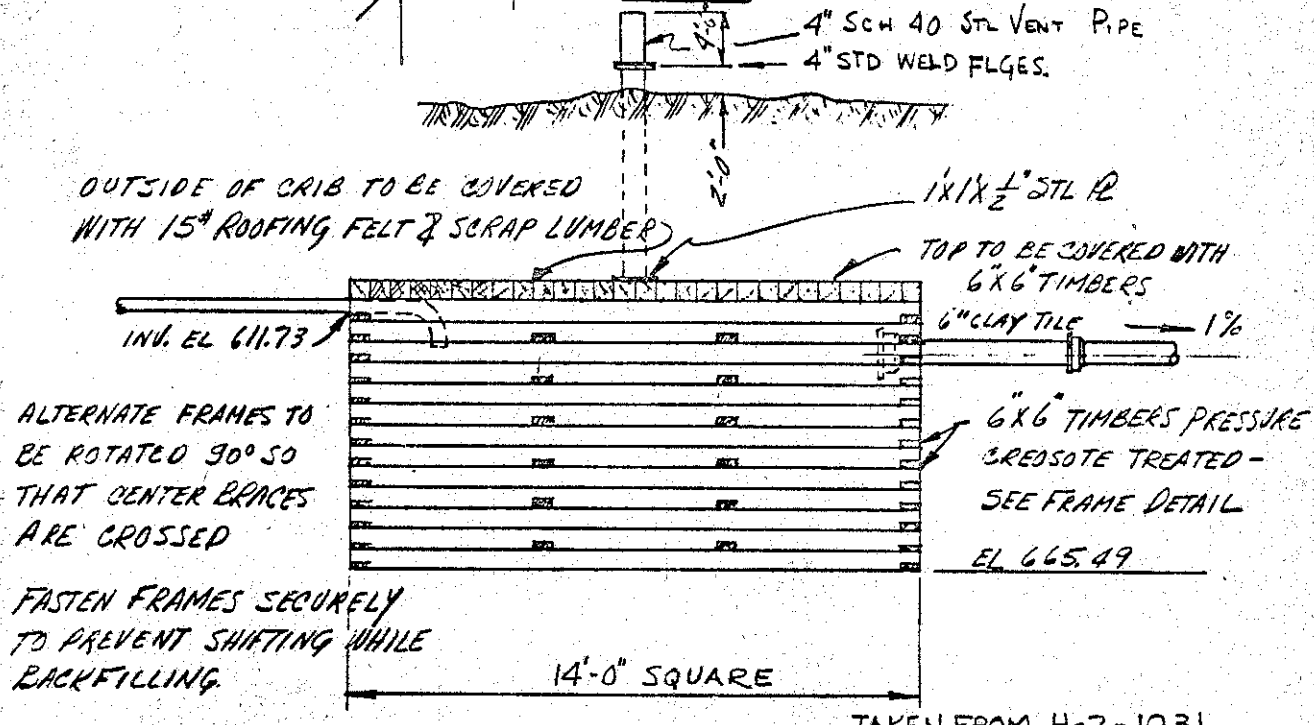


TAKEN FROM H-2-1031

216-B-9

HW 55176 PART 6
APPENDIX C-15
DRAWN JLSIMEK 12/16/59

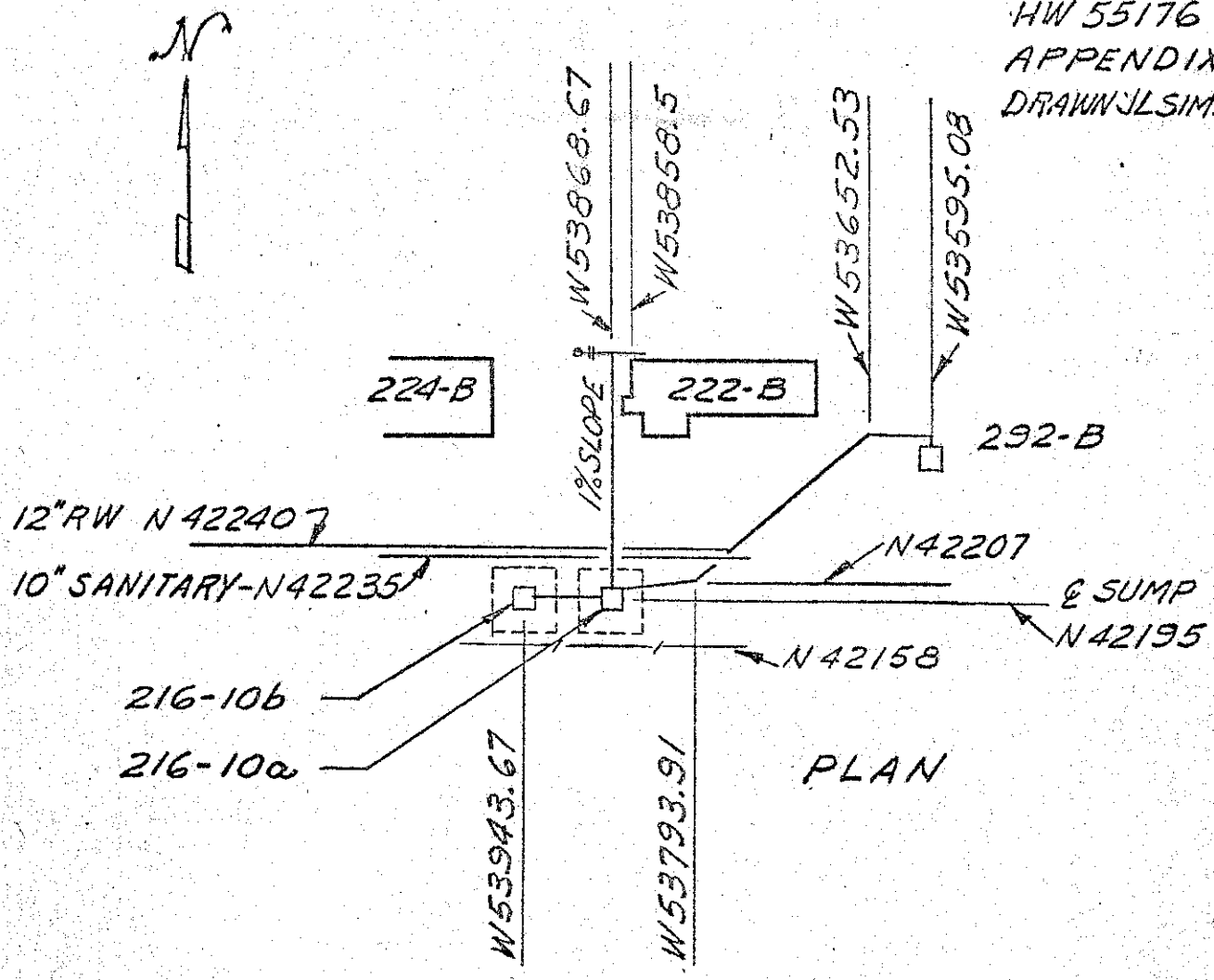


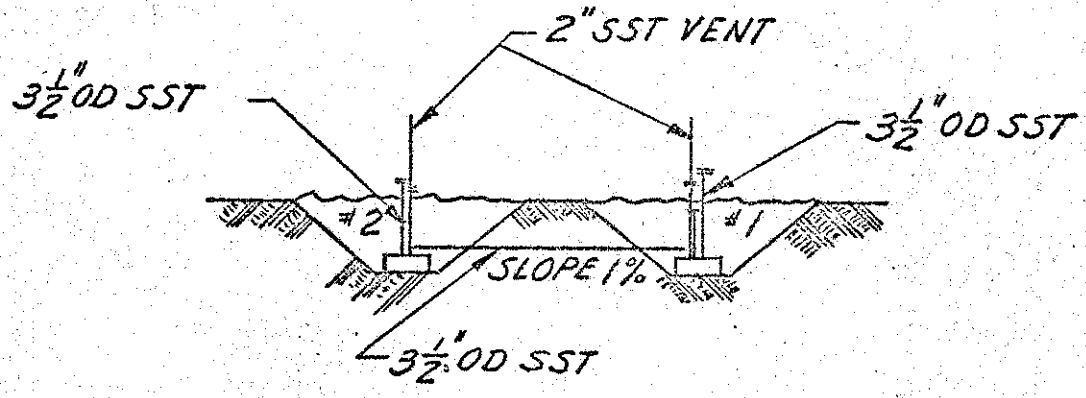


216-B-10a

216-B-10b

H-2-1649

16

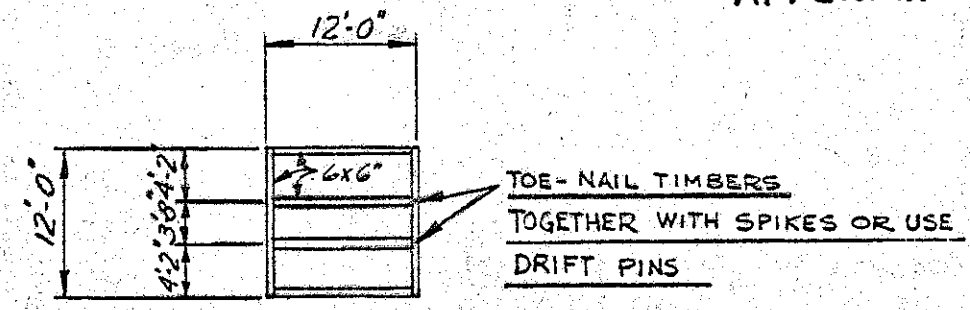


FRAME DETAIL

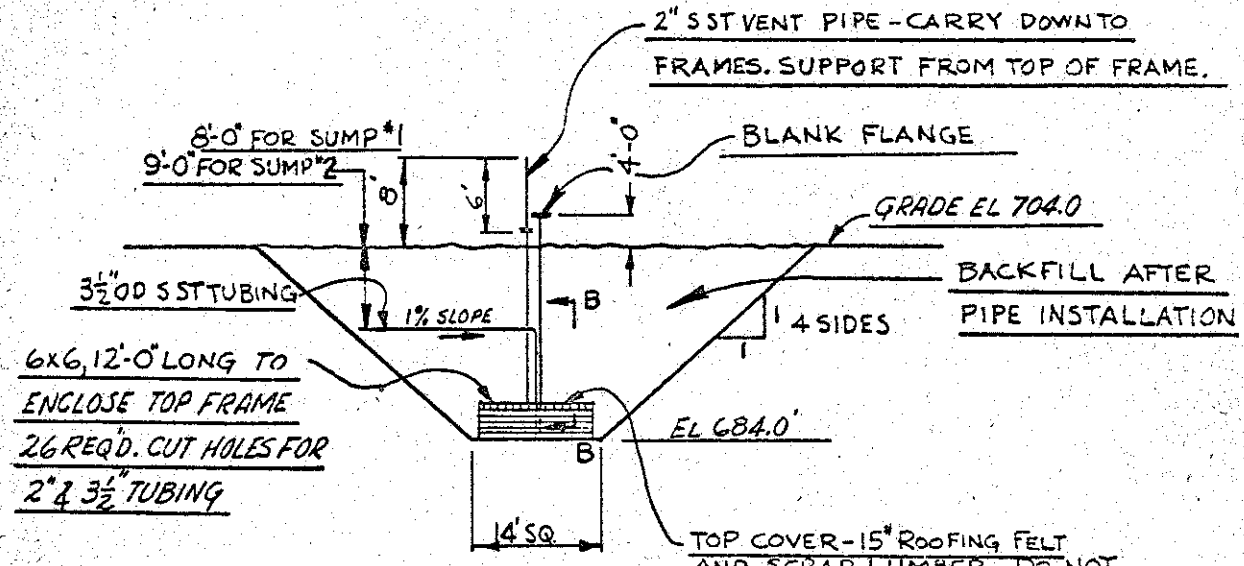


FRAMES - 7 REQ'D PER SUMP

ALTERNATE FRAMES TO BE ROTATED 90° TO HAVE BRACES CRISS-CROSSING

FASTEN FRAMES TOGETHER TO PREVENT SHIFTING AT BACKFILL.

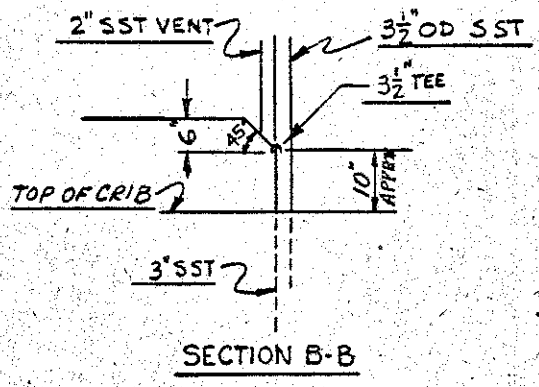


SECTION B-B

TAKEN FROM
H-2-1649

216-B-10a & 10b

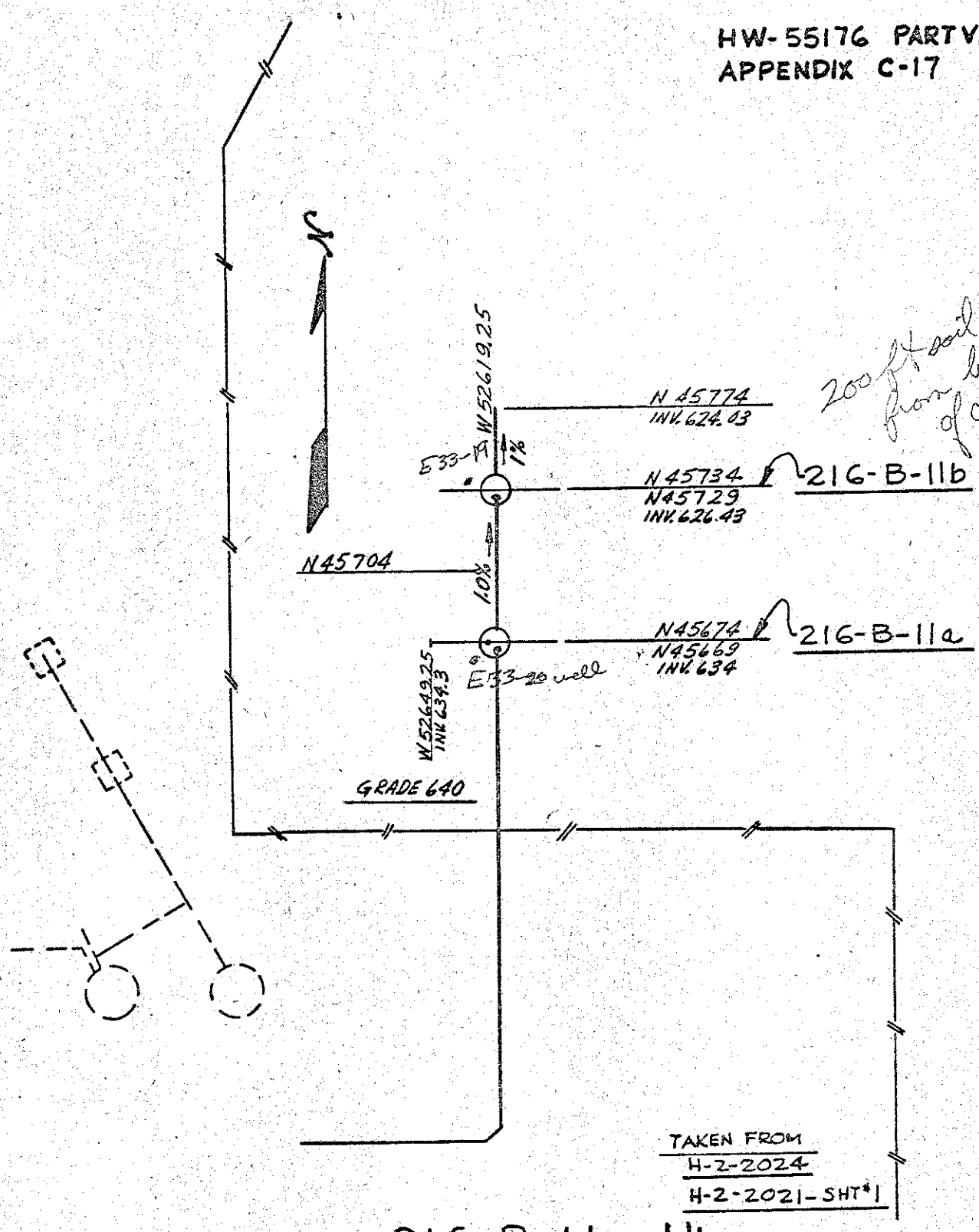
N
W 52619.25
N 45774
INV. 624.03
200 ft soil col. from bottom of cut to G.W.
E33-
1%
N45734
N45729
INV. 626.43
216-B-11b
N45704
1.0%
N45674
N45669
INV. 634
216-B-11a
E33-20 well
W 52649.25
INV. 634.3
GRADE 640
TAKEN FROM
H-2-2024
H-2-2021-SHT#1

216-B-11a & 11b

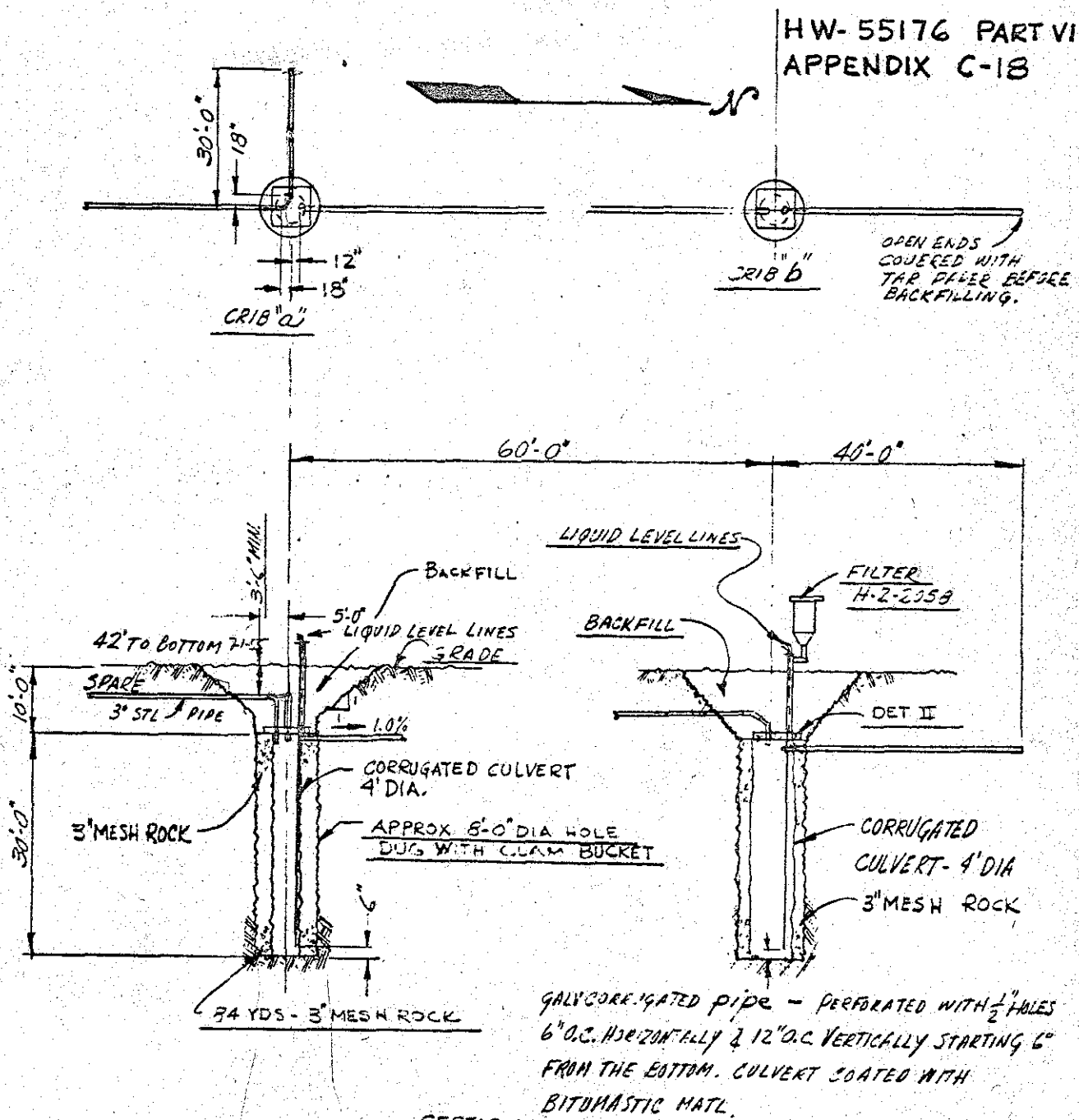


GALV CORRUGATED pipe - PERFORATED WITH 1/2" HOLES 6" O.C. HORIZONTALLY & 12" O.C. VERTICALLY STARTING 6" FROM THE BOTTOM. CULVERT COATED WITH BITUMASTIC MATL.

SECTION

14,400

TAKEN FROM
H-2-2024
H-2-2022

216-B-11a & 11b

DRAWN JLS/MEK 12/16/59

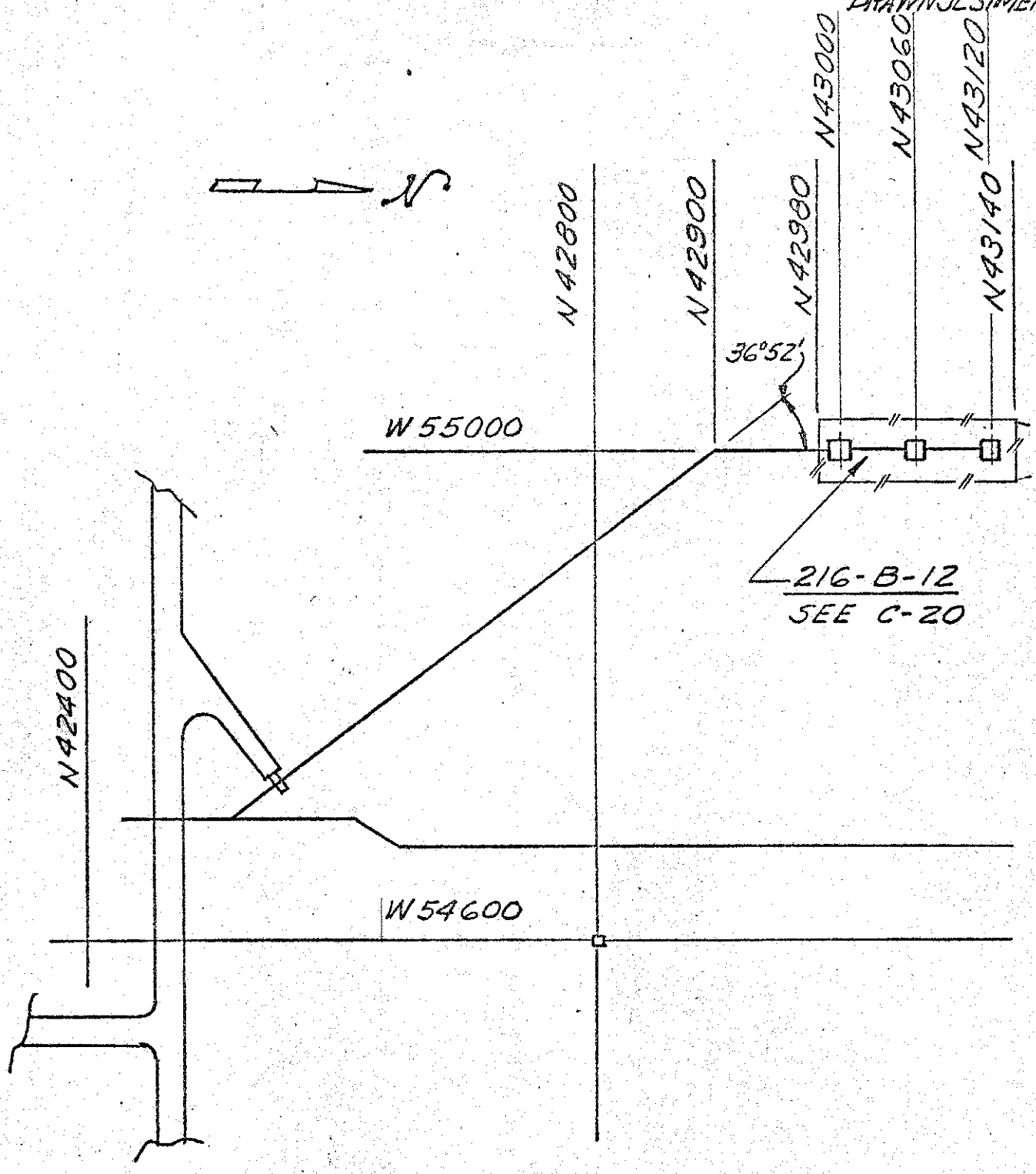


216-B-12
H-2-43046

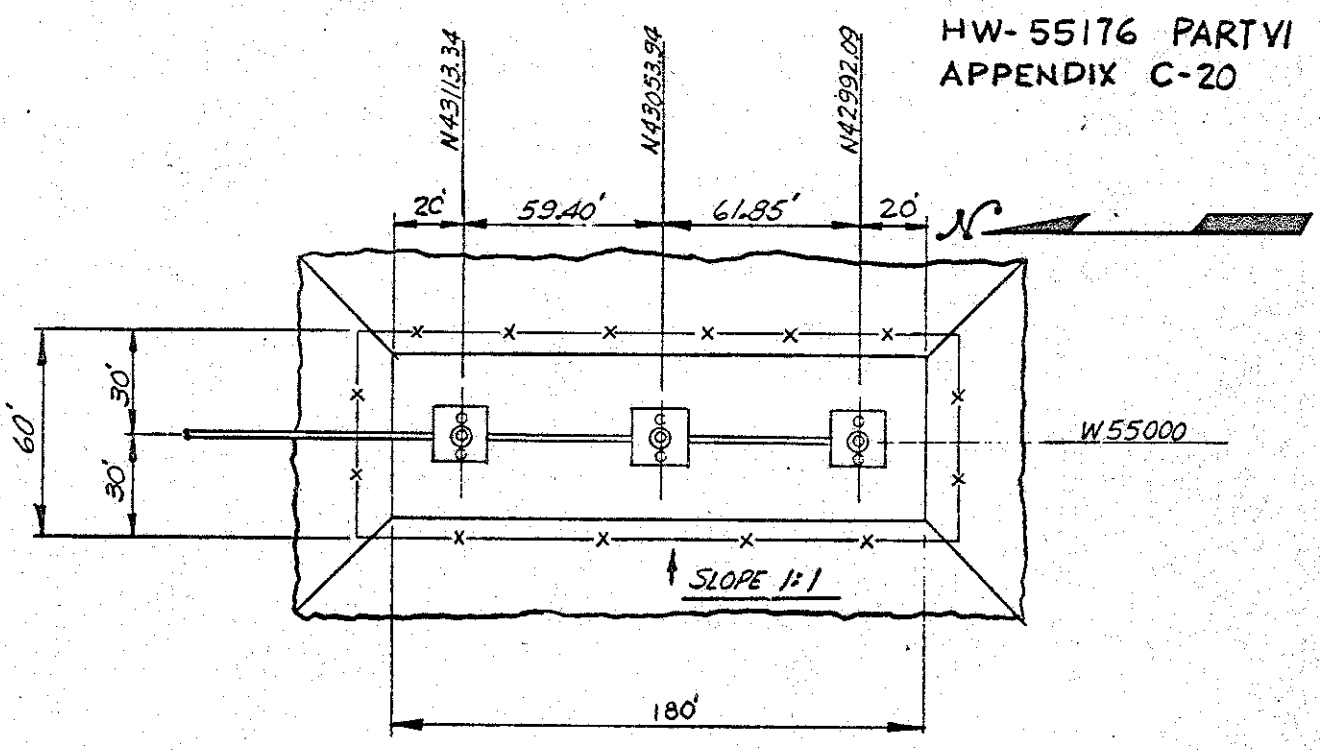


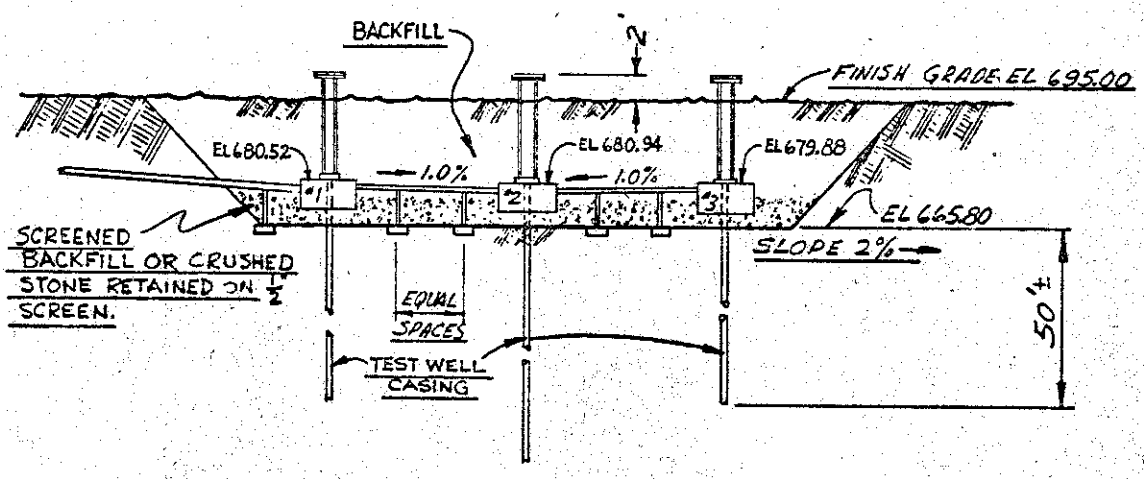


TAKEN FROM H-2-43029

216-B-12

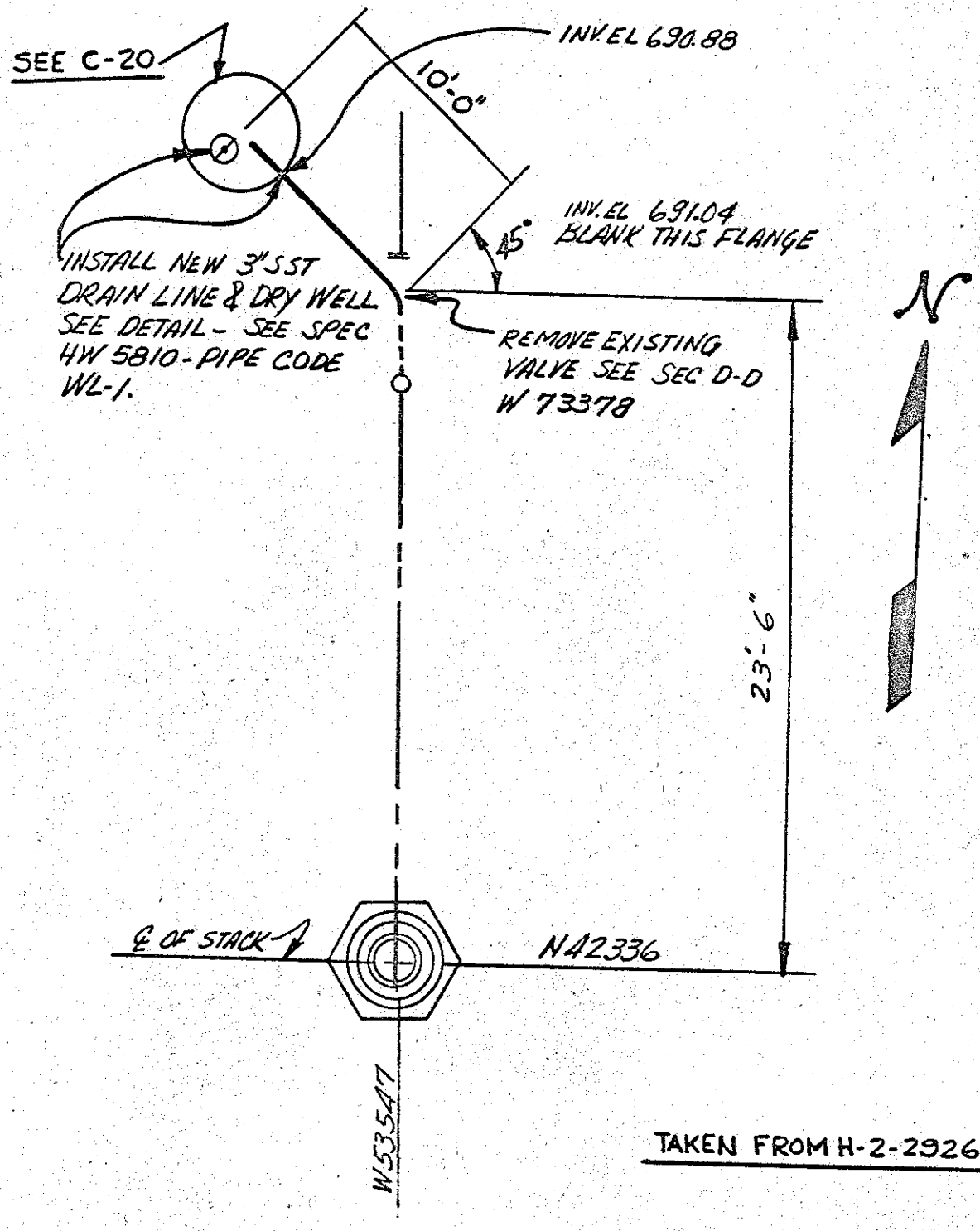


TAKEN FROM H-2-2926

216-B-13

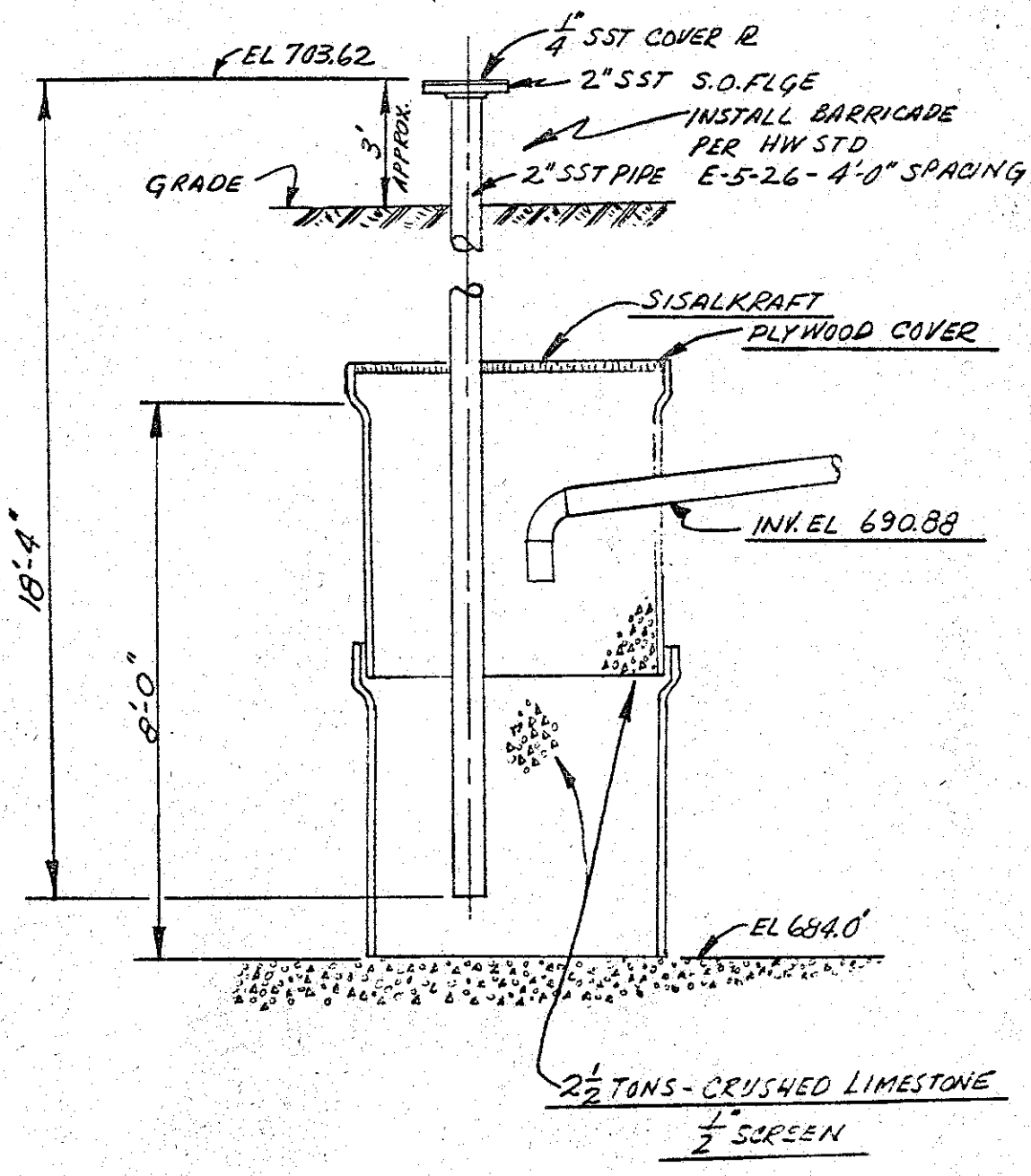


TAKEN FROM H-2-2926

216-B-13

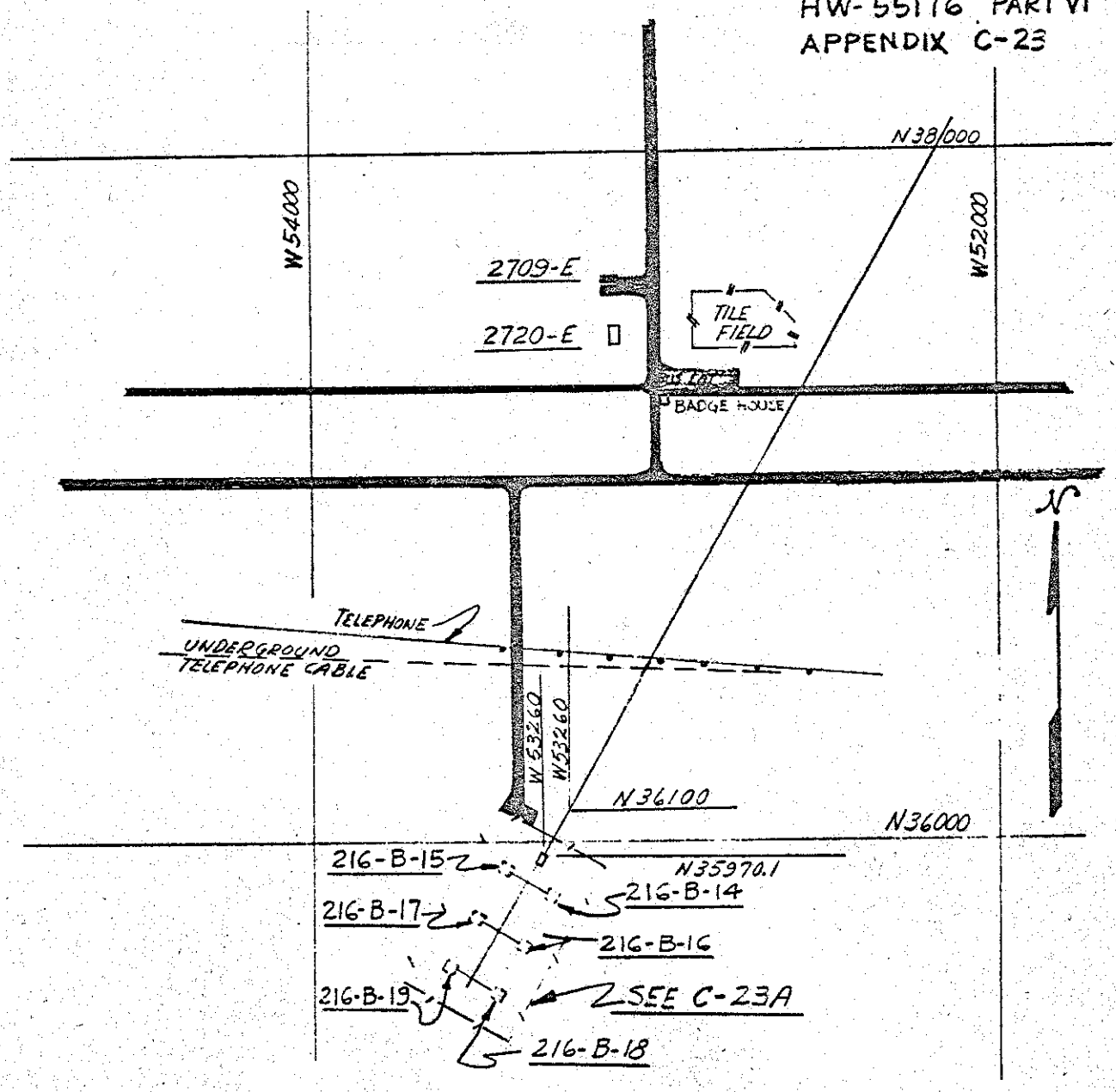


TAKEN FROM H-2-2900

216-B-14-15-16-17-18-19

HW 55176-PART 6
APPENDIX C-23A
DRAWN J.L. SIMEK 12/14/59

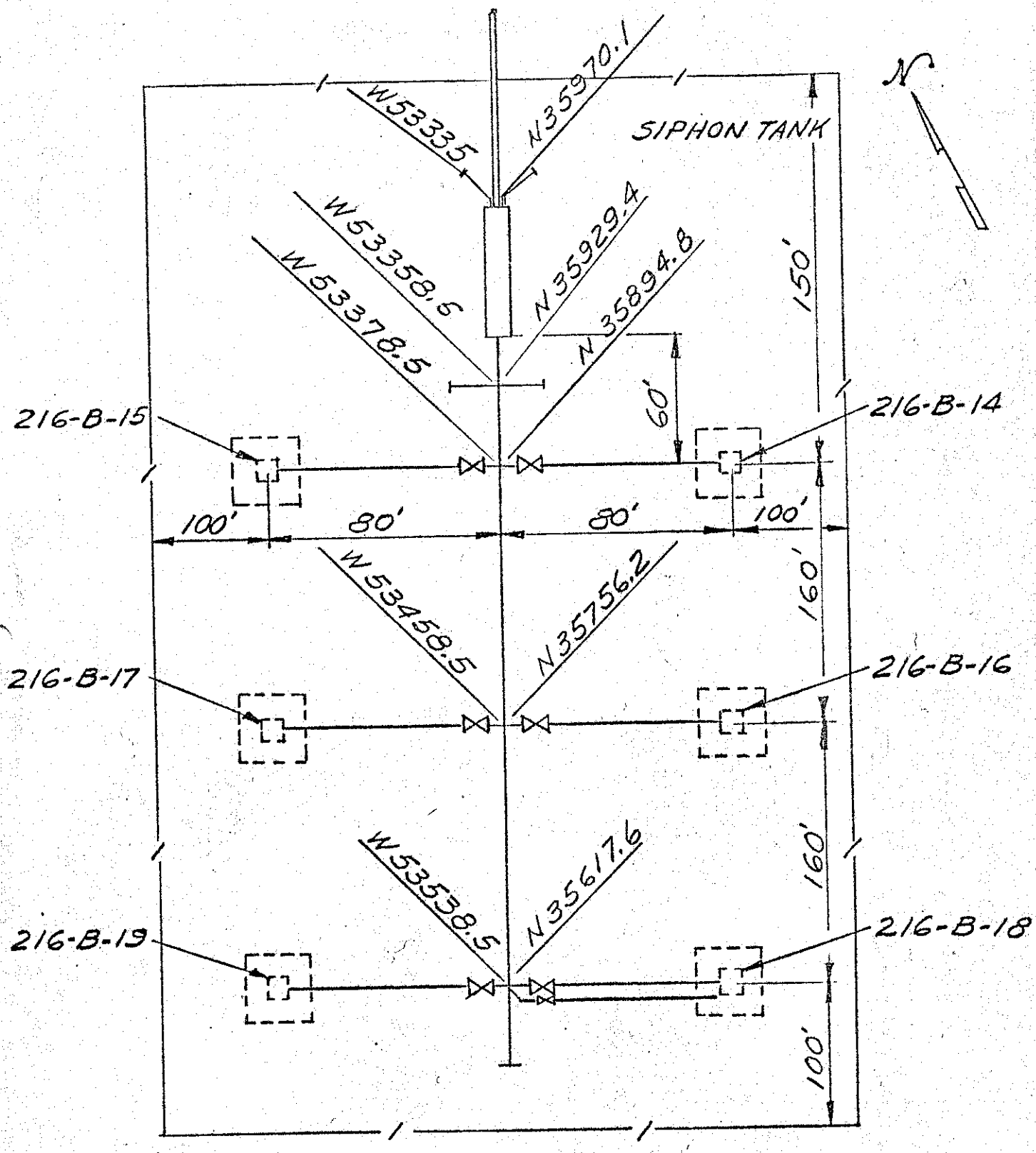


216-B-14-15-16-17-18-19

H-2-2907

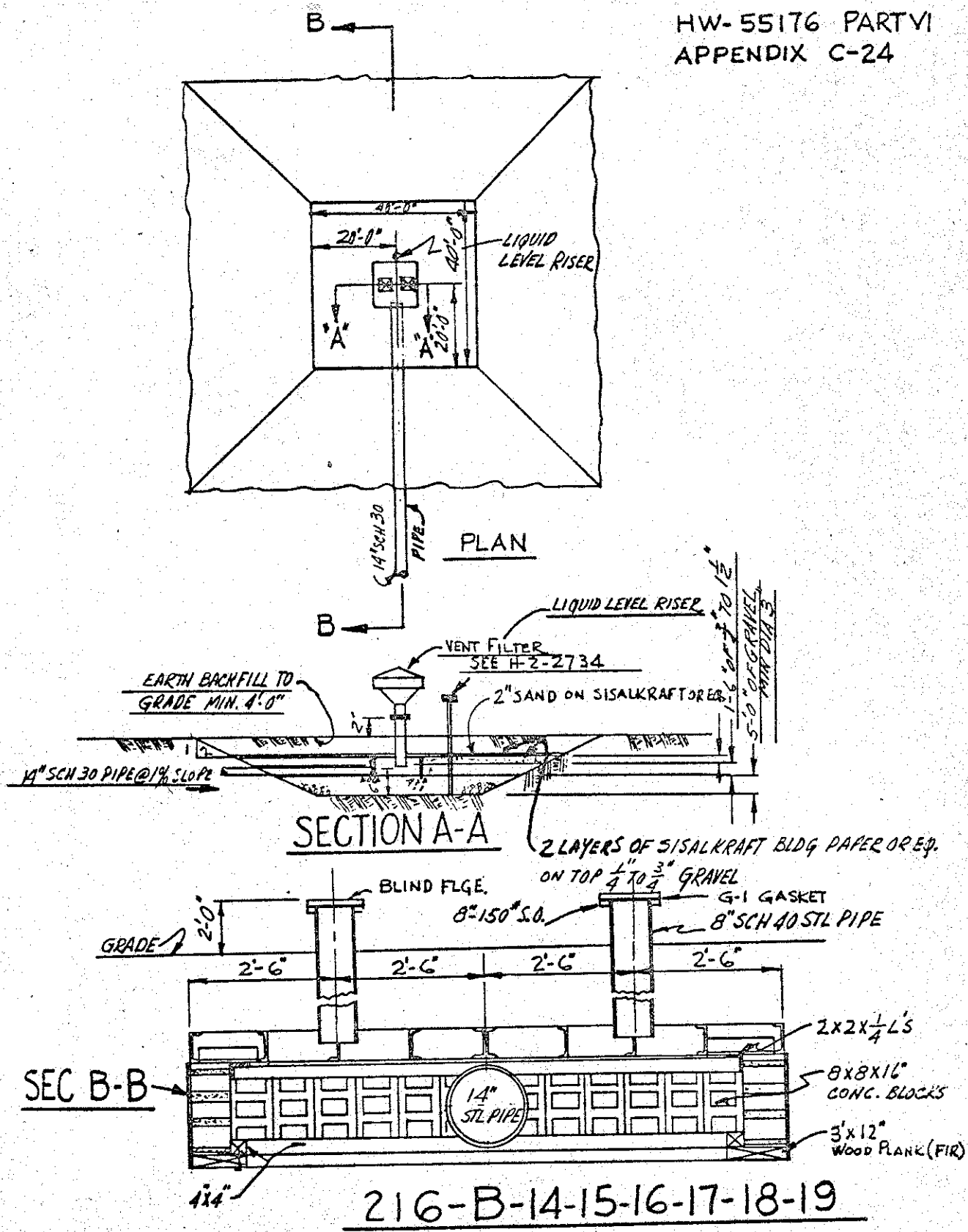


216-B-14-15-16-17-18-19

HW 55176-PART 6
APPENDIX C-25
DRAWN JLSIMEK 12/18/59

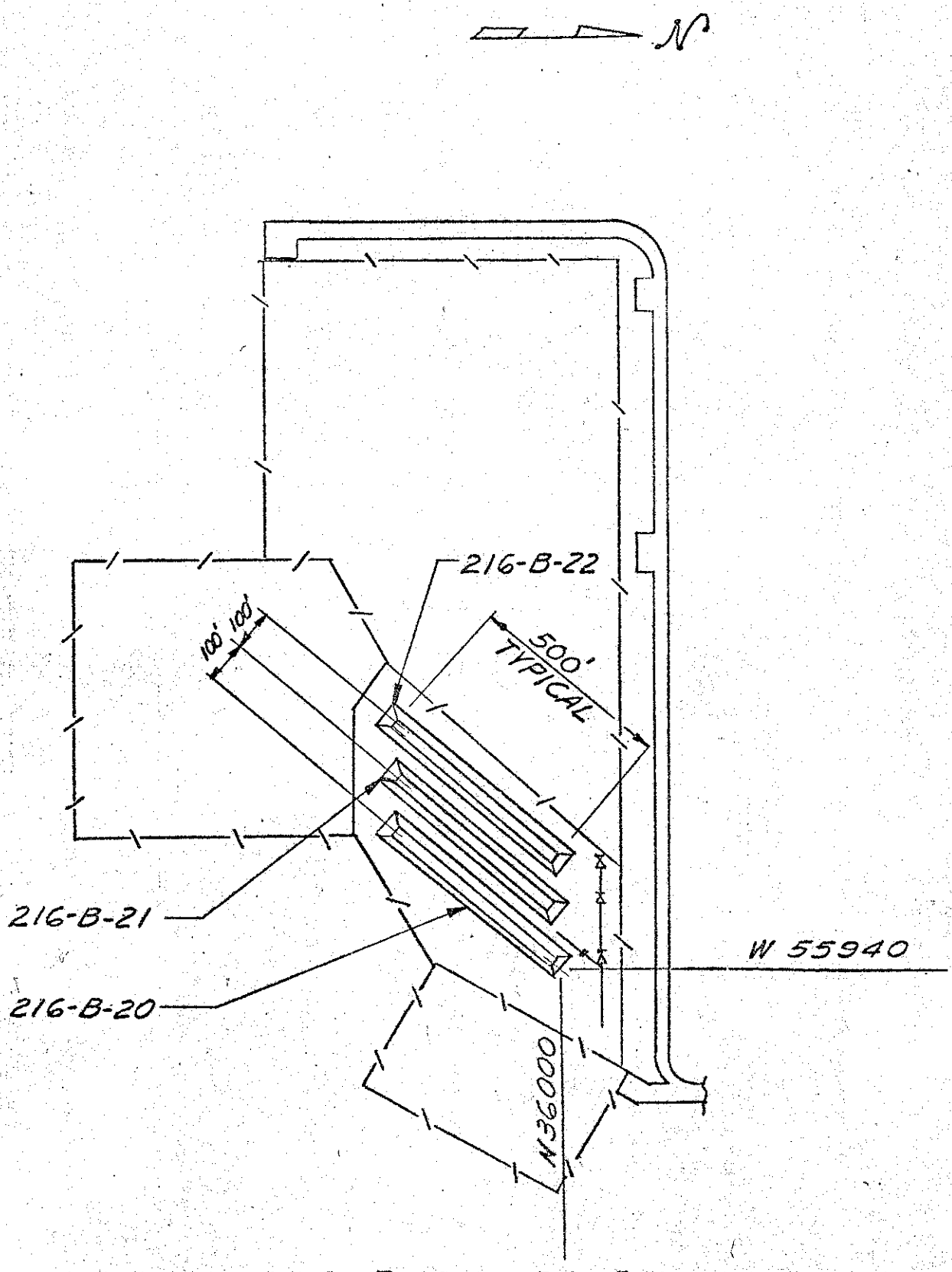


216-B-20-21-22
H-2-3203

HW 55176-PART 6
APPENDIX C-26
DRAWN JLSIMEK 12/18/59

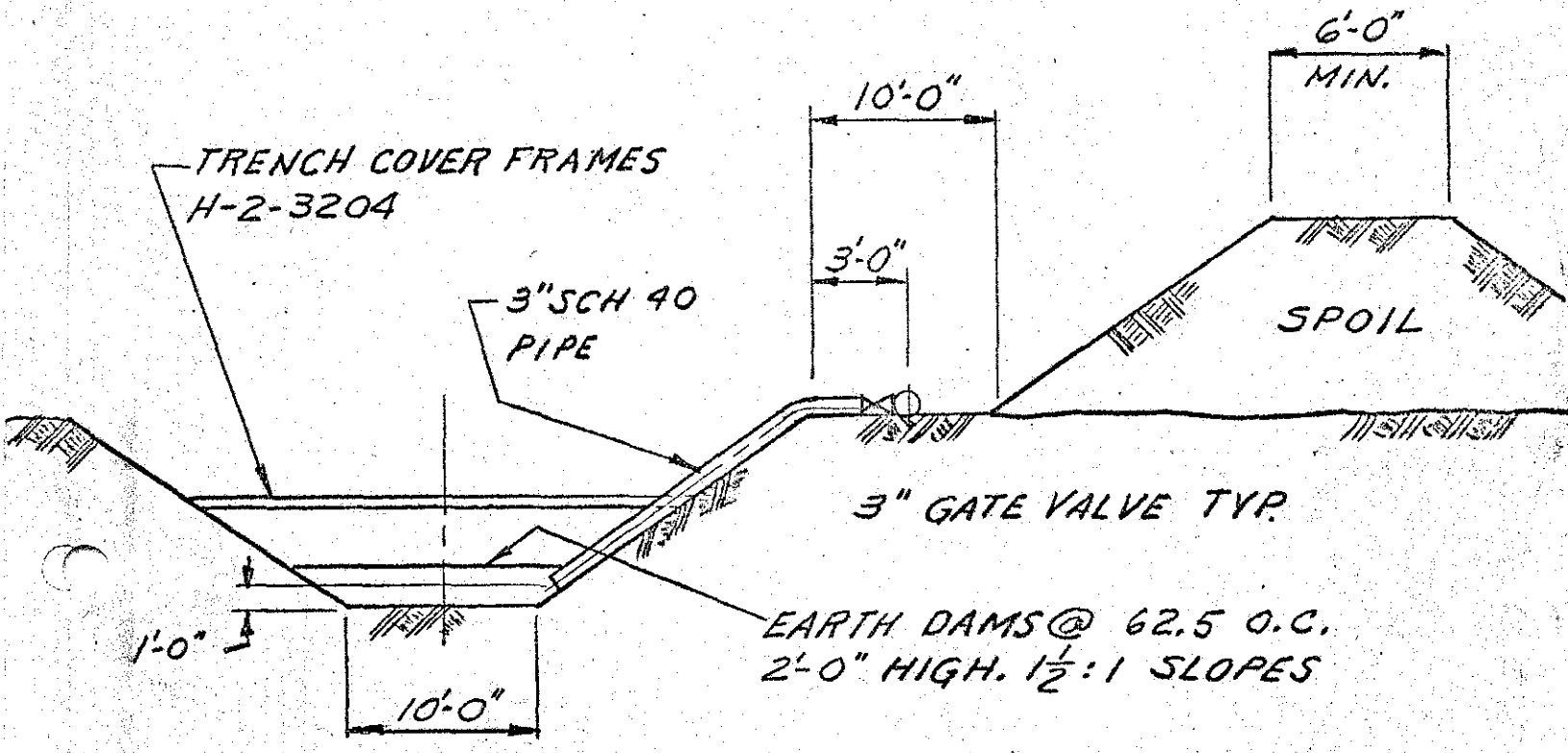


TYPICAL SECTION

216-B-20-21-22-23-24-25-26-27-28-52

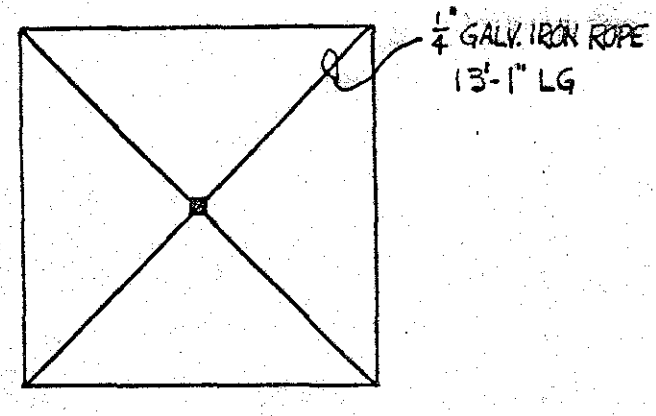


PLAN

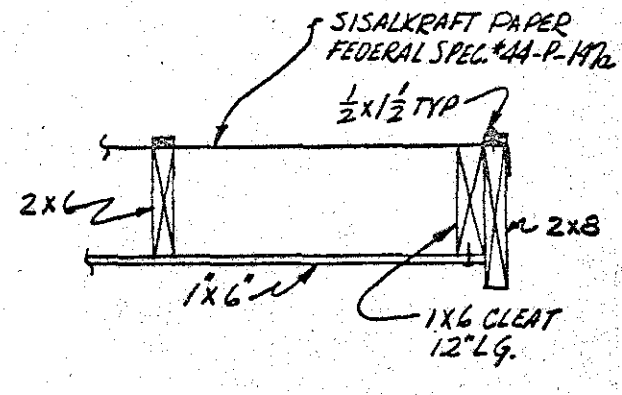


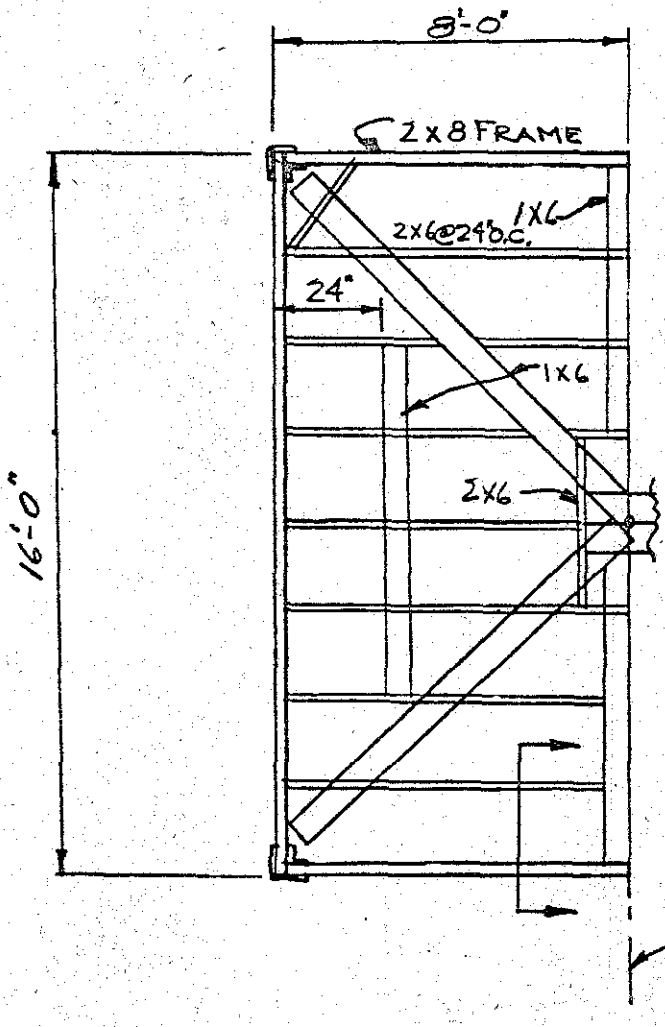


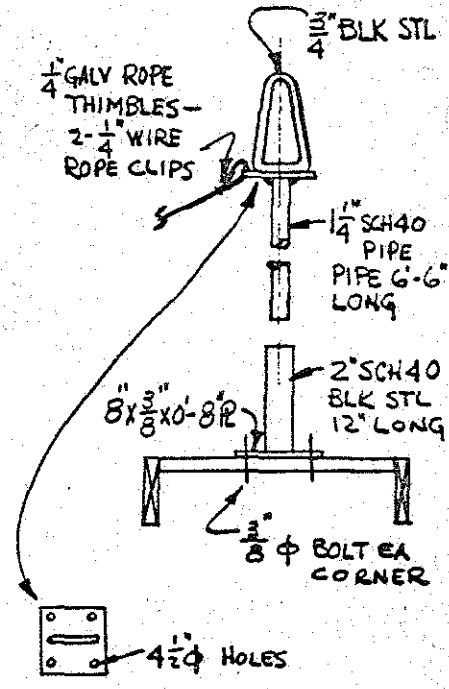


TAKEN FROM H-2-3204

216-B-20-21-22

HW 55176-PART 6
APPENDIX C-27
DRAWN JLSIMEK 12/19/59

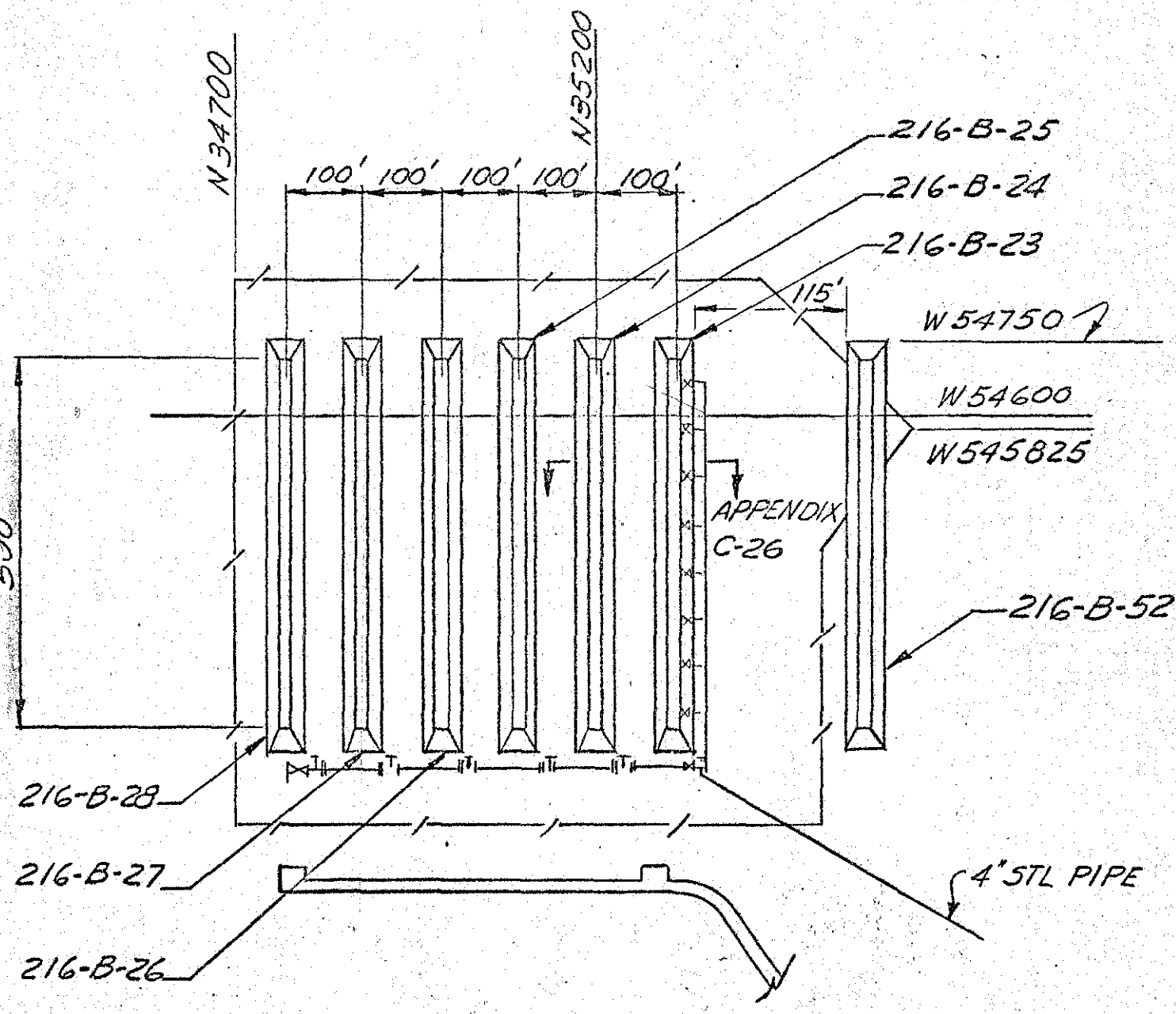


216-B-23-24-25-26-27-28-52

H-2-3232

30

HW 55176-PART6
APPENDIX C-28
DRAWN JLSIMEK 10/22/58

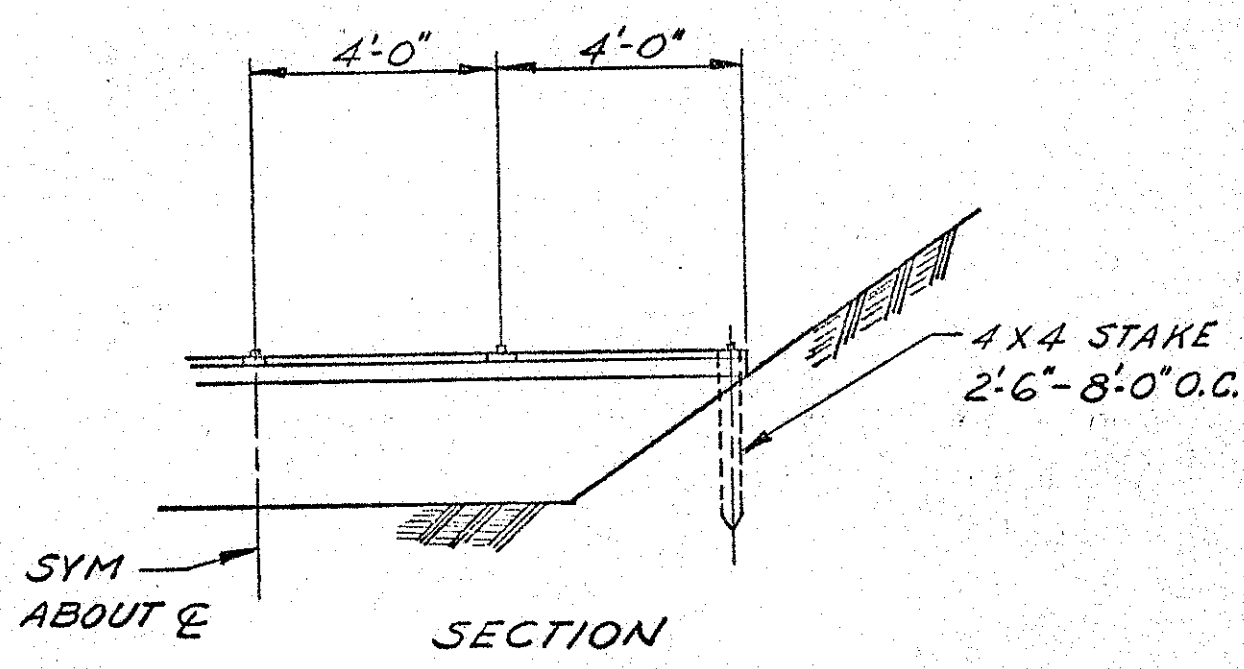


SECTION

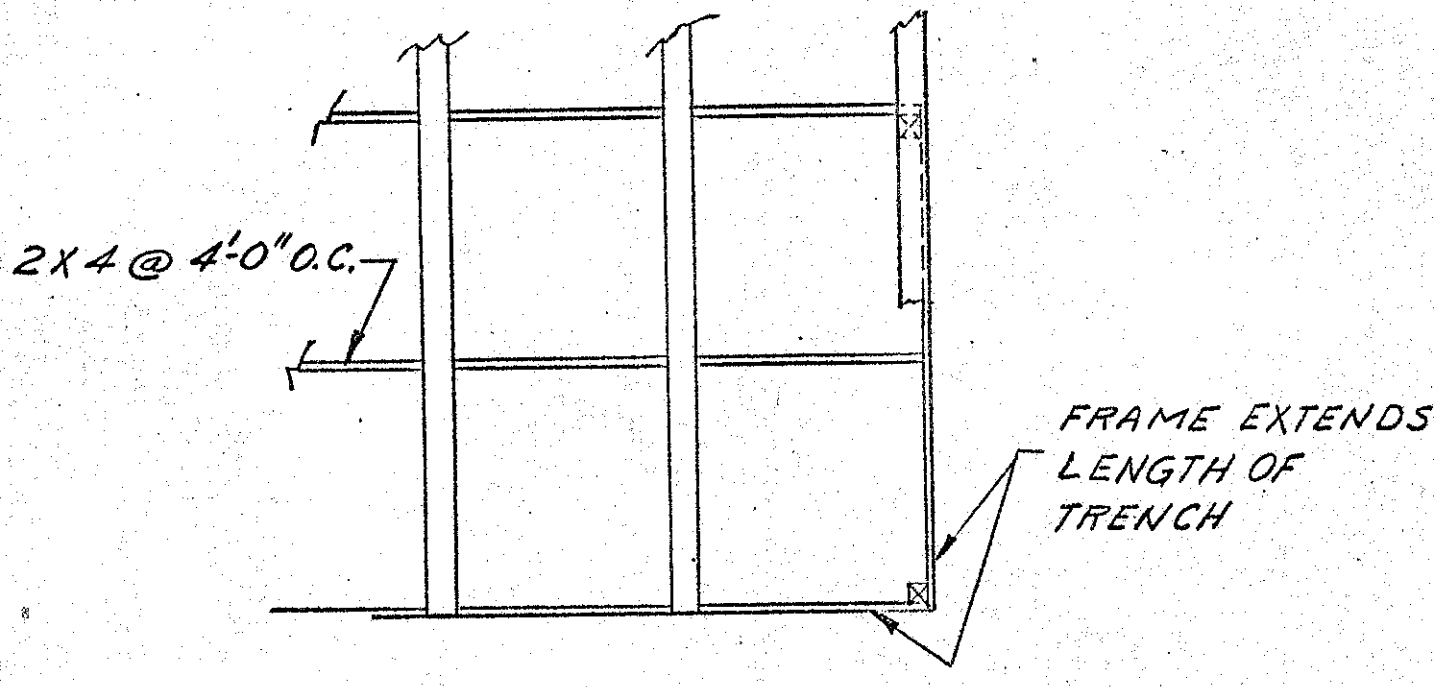


TRENCH COVER DETAIL

216-B-23-24-25-26-27-28-52

DRAWN J.L. SIMEK 12/7/59

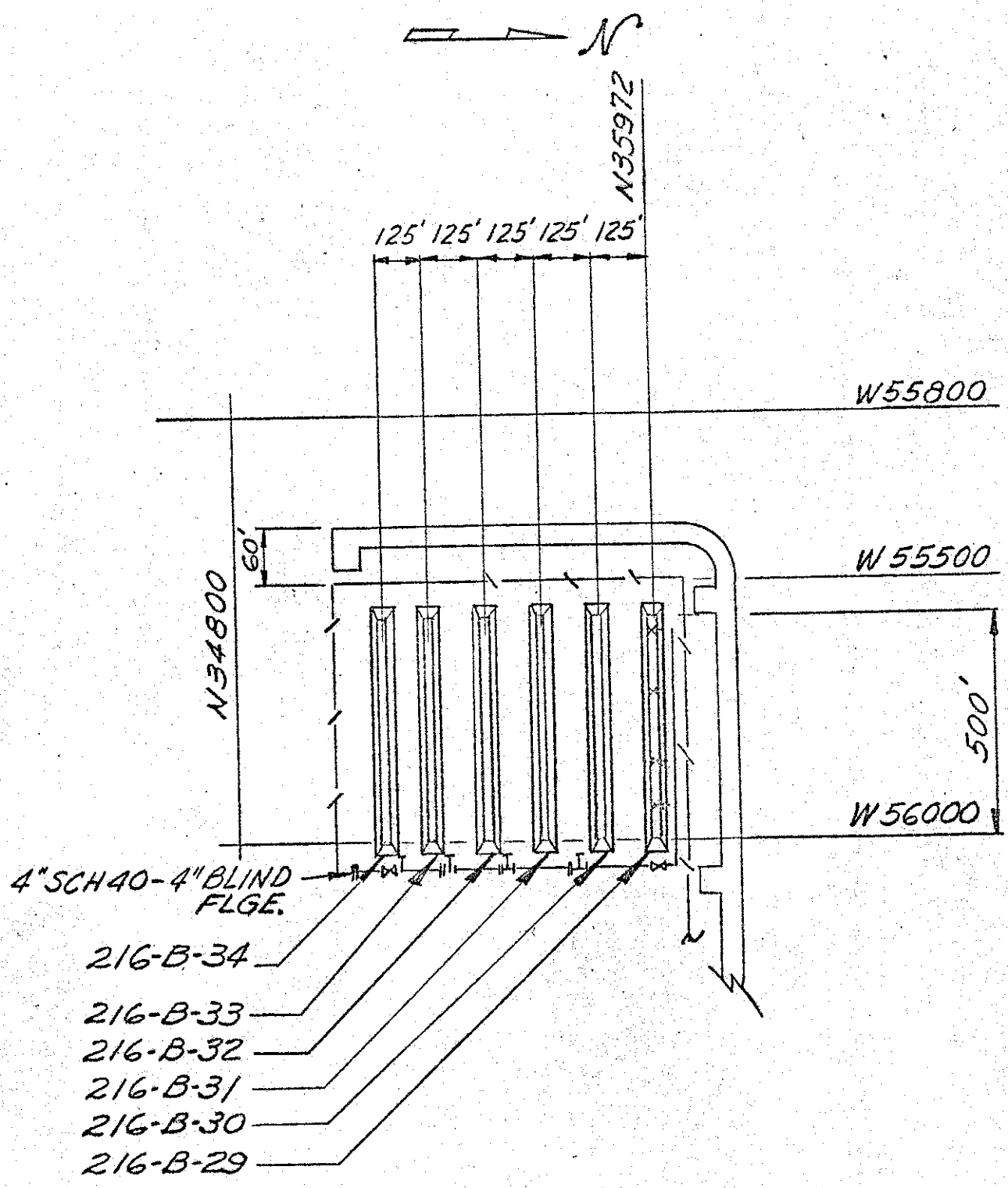


216-B-29-30-31-32-33-34

H-2-3336

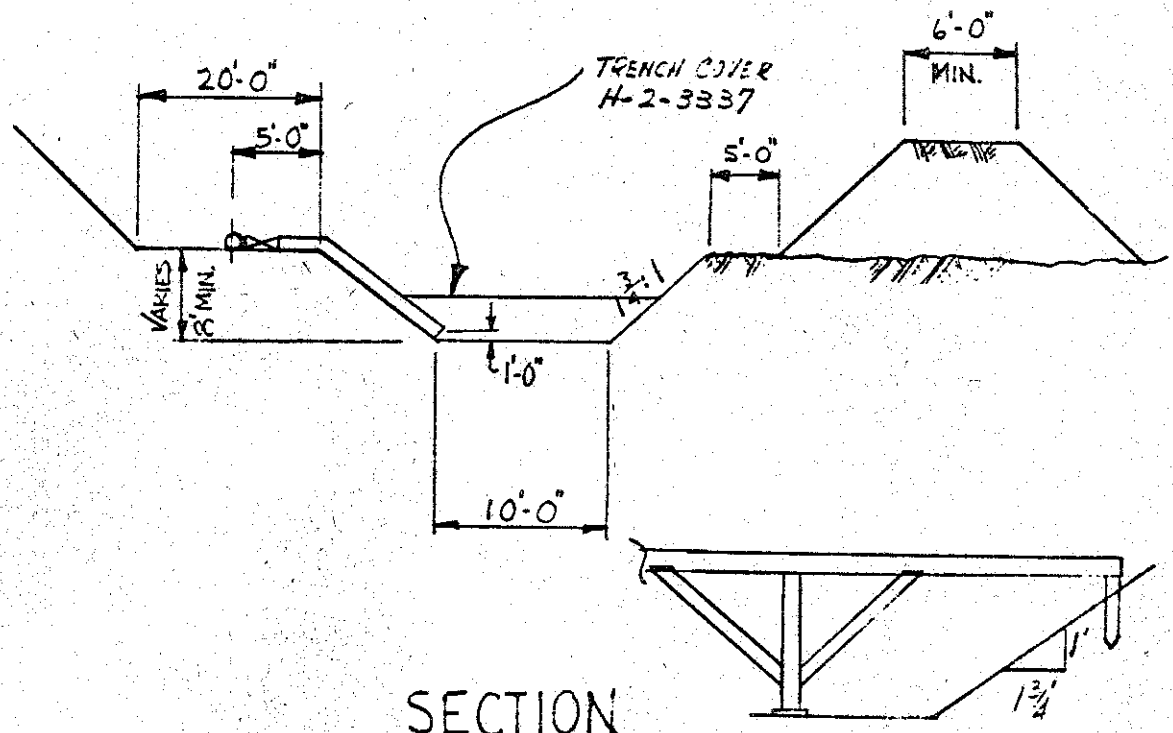


SECTION

TYPICAL

TRENCH COVER

TAKEN FROM H-2-3337

216-B-29-30-31-32-33-34

HW55176-PART 6
APPENDIX C-31
DRAWN J.L. SIMEK 12/17/59

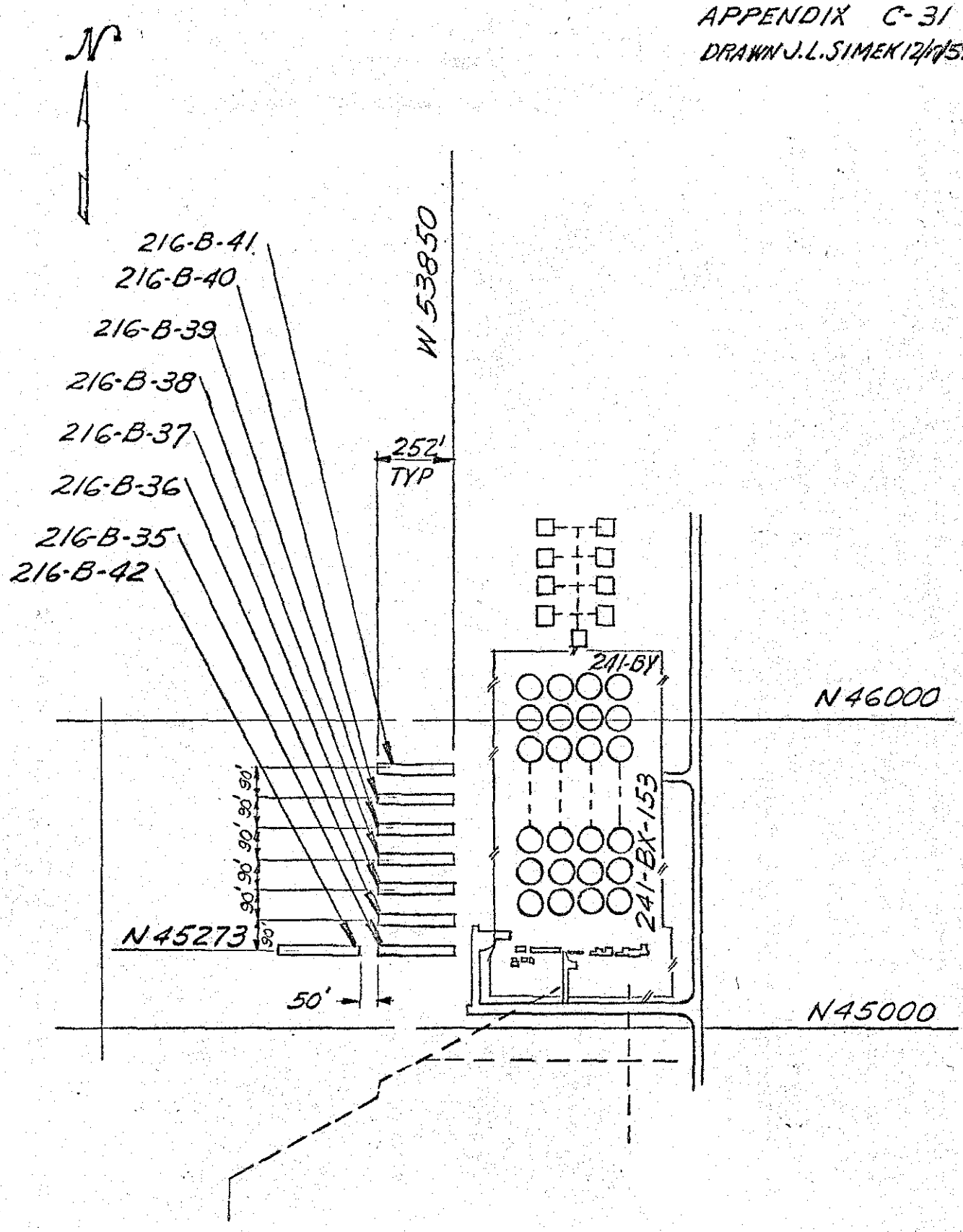


216 B-35-36-37-38-39-40-41-42

SK-2-2408

34

10

HW 55176-PART 6
APPENDIX C-32
DRAWN J.L. SIMEK 12/17/89

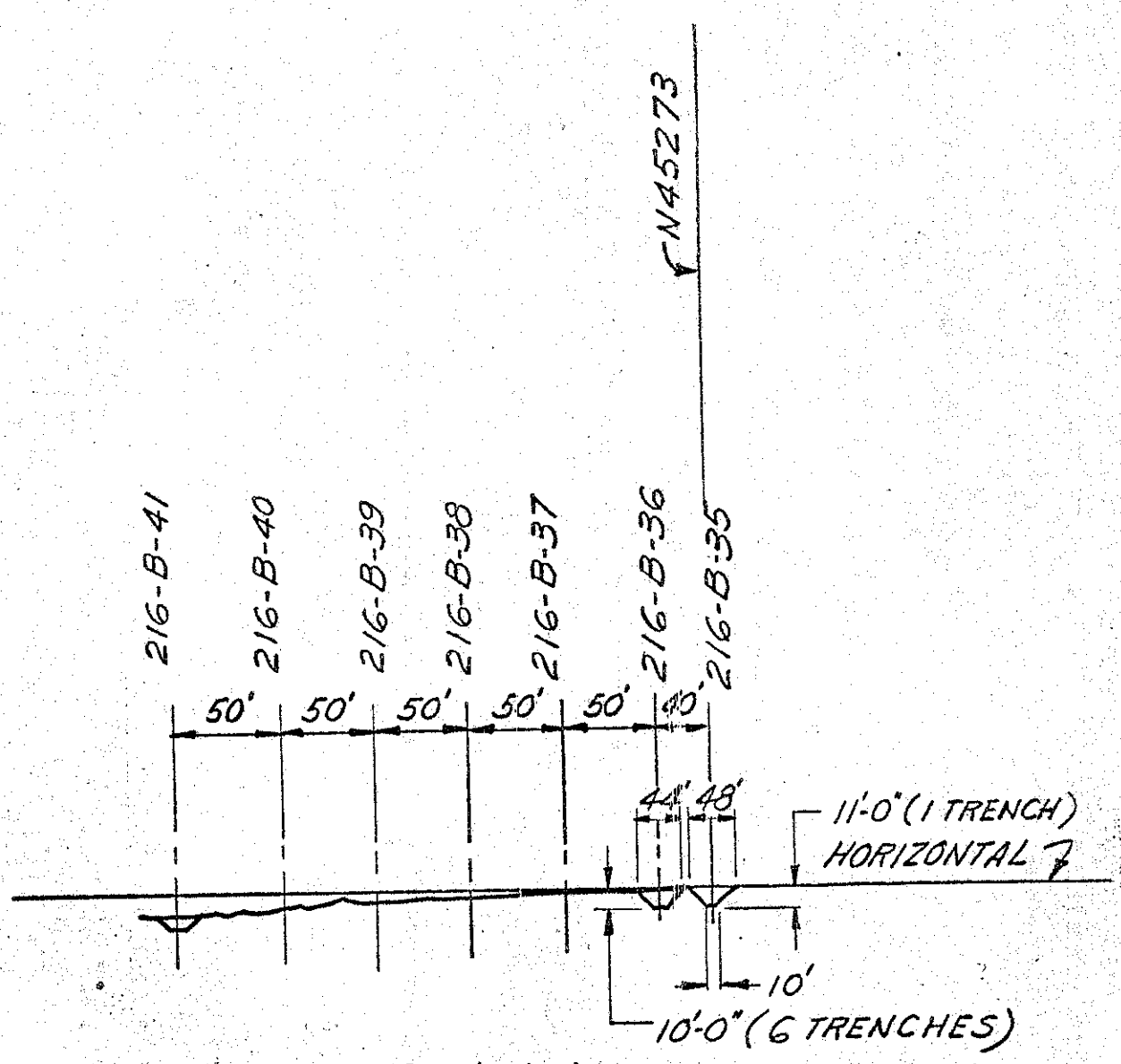


SECTION A-A

216B-35-36-37-38-39-40-41-42
SK-2-2408

35

DRAWN JLSIMEK 12/18/59

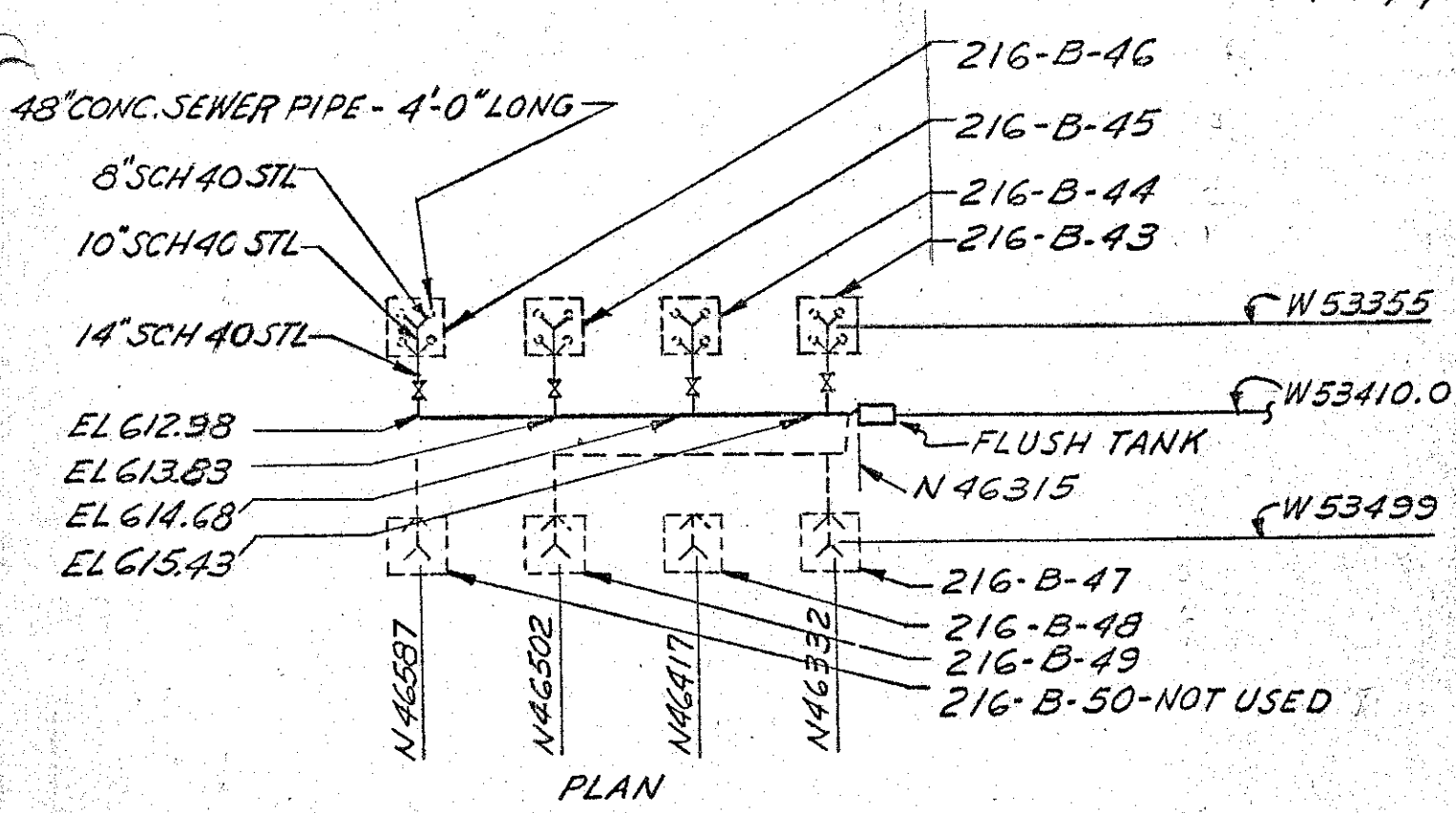


PLAN

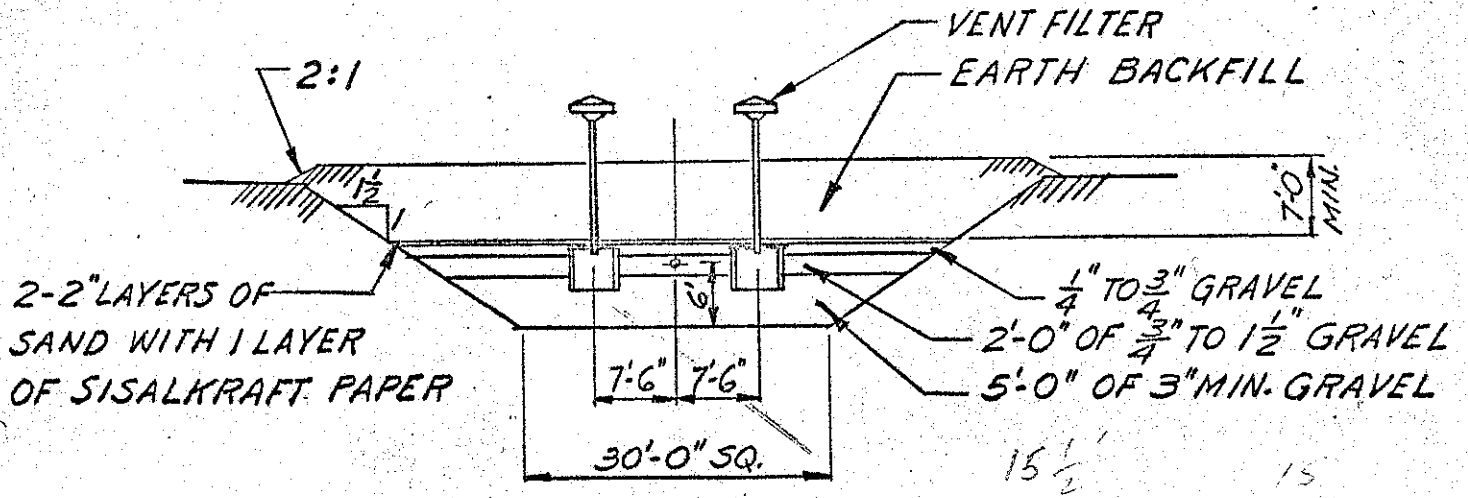


15½

216-B-43-44-45-46-47-48-49-50

H-2-2603
H-2-2605

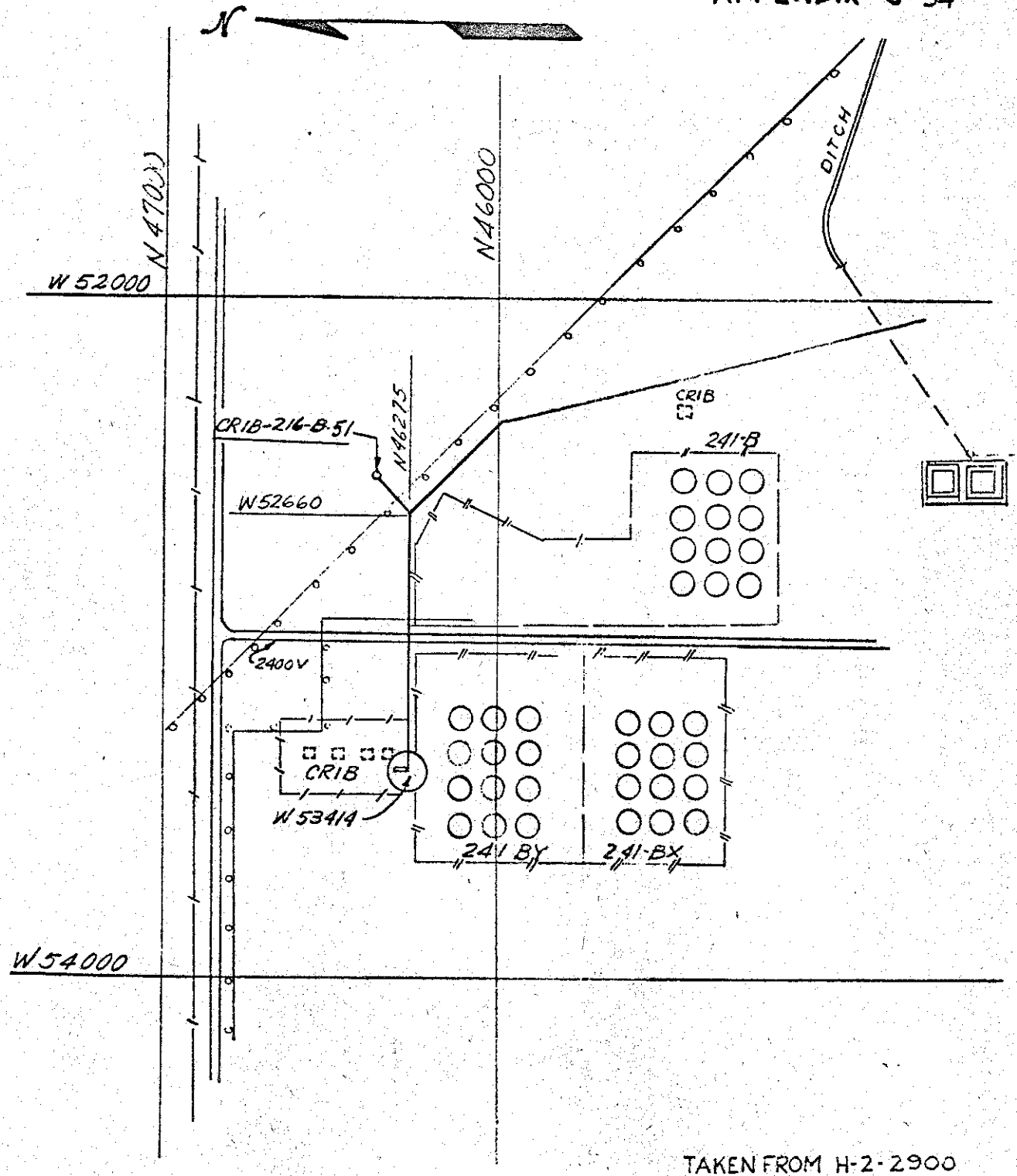


TAKEN FROM H-2-2900

216-B-51

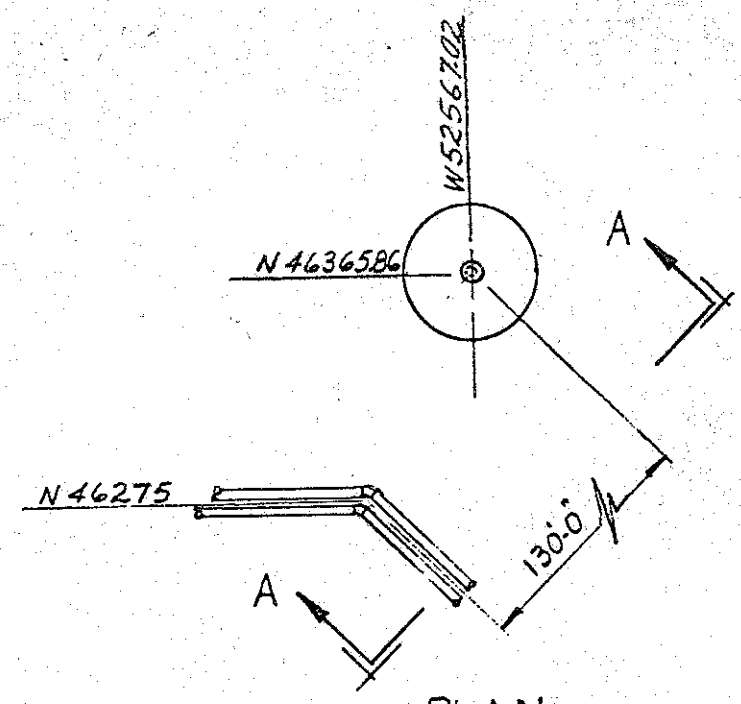


PLAN

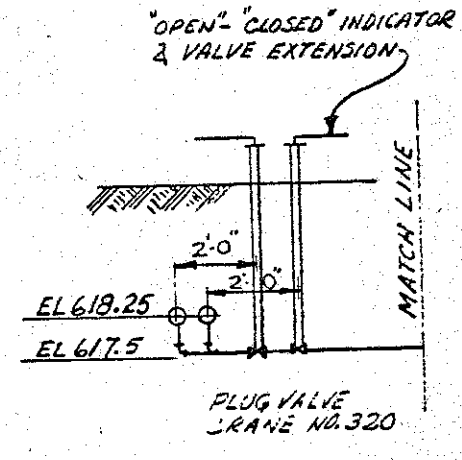


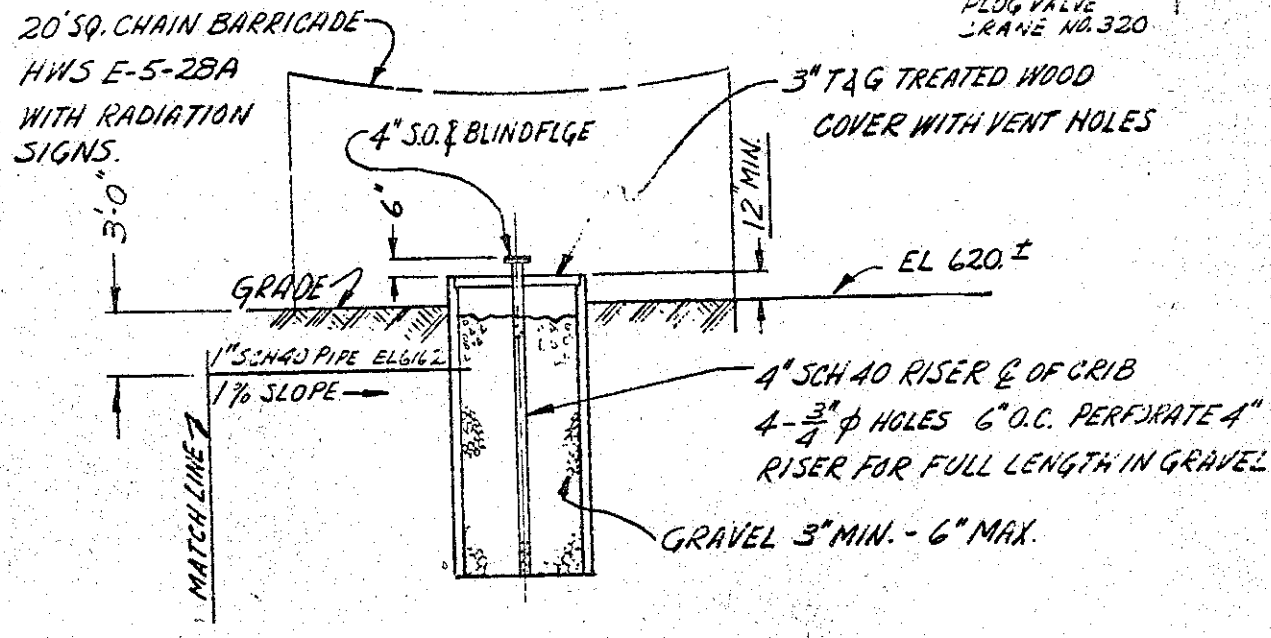


SECTION A-A

TAKEN FROM H-2-2908

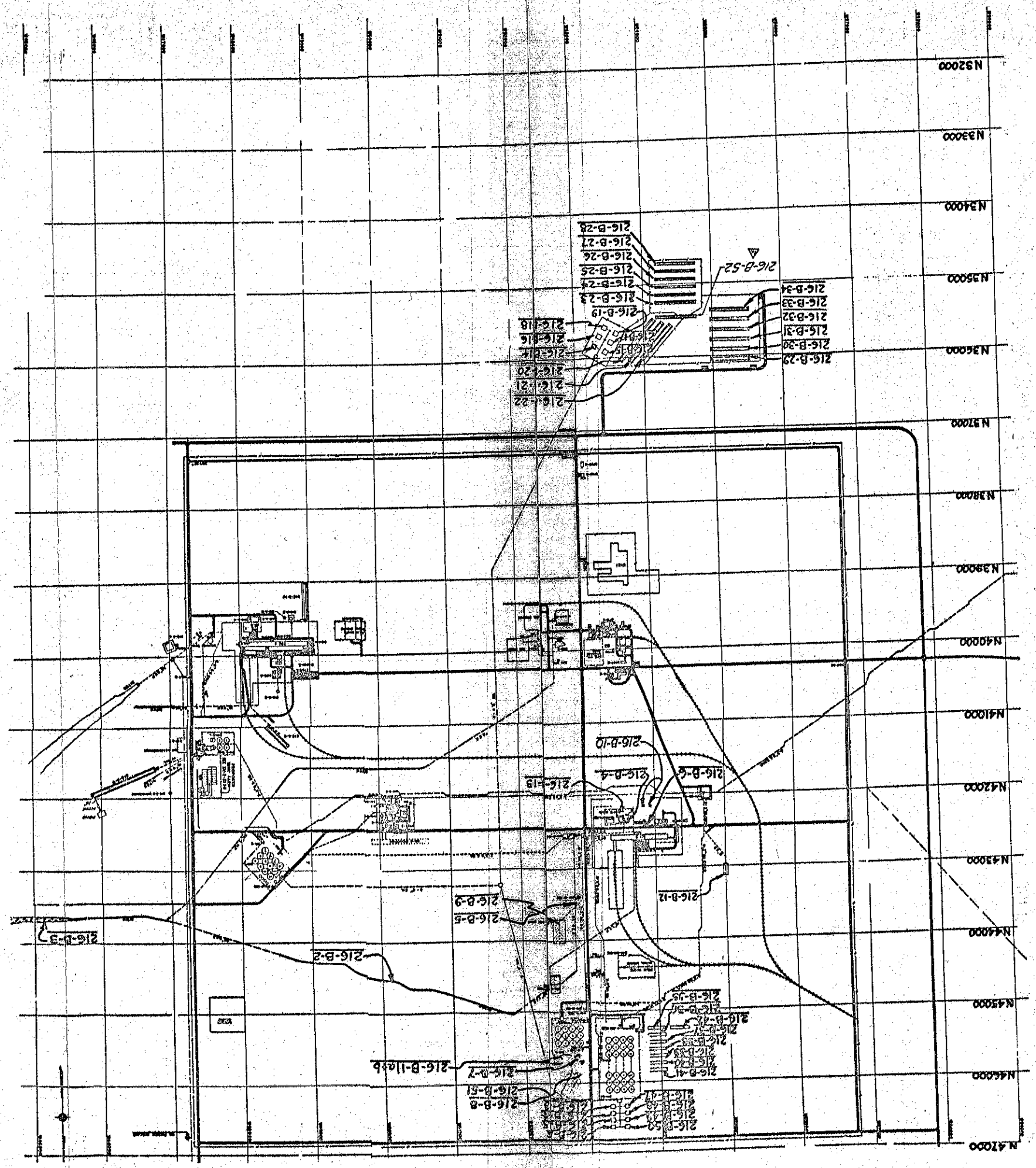


APPROVED
FOR DESIGN
NOT FOR CONSTRUCTION

| | | | | | | | |
|---|---|---|---|---|---|---|---|
| 1 | 04/06/06 | 6-6 | | | | | |
| REVISIONS | | | | | | | |
| SK-2-17840 | | | | | | | |
| NONE | | | | | | | |
| SCALE | | | | | | | |
| 6-14-90 | | | | | | | |
| 997 | | | | | | | |
| U. S. ATOMIC ENERGY COMMISSION | | | | | | | |
| HANFORD ATOMIC PRODUCTS OPERATION | | | | | | | |
| GENERAL ELECTRIC | | | | | | | |
| "B" PLANT | | | | | | | |
| LIQUID WASTE DISPOSAL SYSTEM | | | | | | | |
| 216-B-SERIES | | | | | | | |
| SK-2-17840 | | | | | | | |
| 0401 | | | | | | | |

HW-55176-FIII
APPENDIX 'D'

THIS PAGE INTENTIONALLY
LEFT BLANK

THIS PAGE INTENTIONALLY
LEFT BLANK

UNCLASSIFIED
(CLASSIFICATION)

GENERAL ELECTRIC

HANFORD ATOMIC PRODUCTS OPERATION - RICHLAND, WASHINGTON

DOCUMENT NO.

HW-55176, PT. VII

COPY NO.

TITLE

INDEX OF CPD CRIB BUILDING NUMBERS
DESIGNS OF CPD RADIOACTIVE LIQUID WASTE
DISPOSAL SITES

Part VII of VII Parts - Process Technology - Study Report

DATE

October 22, 1959

ISSUING FILE

AUTHOR

E. Doud

| ROUTE TO | PAYROLL NO. | LOCATION | FILES ROUTE DATE | SIGNATURE AND DATE |
|---|---|---|---|---|
| W A Hanley | | | | |
| | | | | |
| | | | | |
| | | | | |
| | | | | |
| | | | | |
| | | | | |
| | | | | |
| | | | | |
| | | | | |
| | | | | |
| | | | | |
| | | | | |
| | | | | |
| | | | | |
| | | | | |

C-1899-MS (5 - 56)

UNCLASSIFIED
(CLASSIFICATION)

TO BE USED ON UNCLASSIFIED AND OFFICIAL USE ONLY DOCUMENTS

# INDEX OF CPD CRIB BUILDING NUMBERS
# DESIGNS OF CPD RADIOACTIVE LIQUID WASTE DISPOSAL SITES

Part VII of VII Parts
Process Technology - Study Report

by

E. Doud
Radiological Development
Facilities Engineering
Chemical Processing Department

October 22, 1959

## D I S T R I B U T I O N

| | |
|---|---|
| CR Bergdahl | TG LaFollette |
| JM Bernard | CE Linderoth |
| A Bradway | PR McMurray |
| WG Browne | WN Mobley |
| GK Carpenter | HE Parker |
| JR Cartmell | HF Peterson |
| E Doud | DW Pearce |
| J Durbin | OH Pilkey |
| JB Fecht | EL Reed |
| DR Gustavson | RE Roberts |
| CT Groswith | HP Shaw |
| WA Haney | ML Short |
| JF Honstead | RC Tabasinske |
| JM Jacques | W Tressler |
| EB Jackson | VW Wood |
| CE Kent | 300 Files |

# INDEX OF CPD CRIB BUILDING NUMBERS
# DESIGNS OF CPD RADIOACTIVE LIQUID WASTE DISPOSAL SITES

Part VII of VII Parts
Process Technology - Study Report

## INTRODUCTION

During the fourteen years or more which the separations areas have operated, many sites have been used for the disposal of radioactive liquid wastes. Various methods have been used in assigning building numbers to these sites and, in a number of cases, changes have been made which have brought about some confusion. One of the reasons being some currently used building numbers do not agree with the numbers existing on design prints for the facilities. Reference (2) was an effort to establish a listing of the liquid waste disposal sites. It required considerable time and research to locate information concerning these sites.

Many varied designs have been used for the disposal of radioactive liquid wastes. Reverse wells, trenches, cribs or caverns, etc., have been used. Specific information on these facilities is often difficult to obtain for in some instances they were constructed on work orders with no records being retained on the design. In general, the design on each facility has been different. This has made it extremely difficult for people to have a good working knowledge of the various waste disposal sites.

## PURPOSE

The purpose of this report (Part VII) is to provide a ready reference of the "C" Area, "N" Area, and miscellaneous liquid waste disposal sites as well as a compilation of sketches showing the basic information on the design of each facility.

Another objective is to establish a simplified and uniform numbering system. Still another objective is to provide an up-to-date tabulation. Previous parts of this report have provided information on cribs for other areas.

## SUMMARY AND CONCLUSIONS

All radioactive liquid waste disposal sites should have the 216 Building number designation. These should be further grouped by giving all such sites for Purex a prefix of 216-A. Other major series would be 216-S for Redox; 216-T for "T" Plant; 216-B for "B" Plant; 216-U for "U" Plant; 216-Z for "Z" Plant; 216-C for "C" Area; and 216-N for "N" Area.

The numbering list in "Official Hanford Works Building List - Specification HW-5000" by Engineering Files - Construction Engineering should be revised to more closely follow the above numbering system.

RECOMMENDATIONS

It is recommended that the following action be taken:

1. All groups and services referring to the "C" Area and "N" Area cribs or report data concerning them should use the index numbering system as presented in this report.

2. That all drawings concerning these disposal sites, including maps, be revised to show the proper locations and numbers for these cribs.

3. Any suggestions for improving the usefulness of this report should be referred to the author.

DISCUSSION

This Part VII completes the series of reports on CPD waste disposal sites. The seven parts give a listing of the site designations, the locations and a description of each structure. These listings provide a basis for future building number assignments. Revisions and additions for each part will be issued as necessary to keep it current.

While some sincere efforts have been made to try and keep a methodical system for recording waste disposal sites, a number of problems have developed, for example, HW-5000, Sheet 29 of 50, lists only eight cribs in the 216-S series. Also reference 2 has assigned numbers which do not agree with the crib numbers assigned on many drawings.

As indicated earlier, the use of the crib index, as presented in this report should be very easy. In addition, information is presented which is very difficult to locate in the records and in some cases it is not available in the records.

REFERENCES

1. HW-5000, "Official Hanford Works Building List - Specification HW-5000" by Engineering Files - Construction Engineering Operation.

2. HW-43121, "Tabulation of Radioactive Liquid Waste Disposal Facilities," by HV Clukey dated May 10, 1956.

3. HW-33305, "Tabulation of Radioactive Liquid Waste Disposal Facilities," by HV Clukey dated October 8, 1954.

4. HW-60807, "Unconfined Underground Radioactive Waste and Contamination in the 200 Areas," by KF Baldridge dated July 15, 1959.

## CROSS REFERENCE

### "C" & "N" Area Radioactive Liquid Waste Disposal Sites

| Suggested Crib No. | Number Listed In HW-5000 | Number Listed in HW-33305 | Number Used on Drawings or Original # | Remarks |
|---|---|---|---|---|
| 216-C-1 | 216-C-1 | 216-C Crib | 216-C | |
| 216-C-2 | 216-C-2 | 291-C Dry Well | - | |
| 216-C-3 | 216-C-3 | 201-C Leading Pit | - | |
| 216-C-4 | 216-C-4 | None | - | |
| 216-C-5 | 216-C-5 | None | - | |
| 216-C-6 | 241-CX | None | 241-CX | |
| 216-C-7 | None | None | - | |
| 216-C-8 | None | None | 271-CR | |
| 216-C-9 | None | C Canyon Excavation | - | |
| 216-N-1 | None | 212-N Swamp | - | |
| 216-N-2 | None | 212-N #1 Trench | - | |
| 216-N-3 | None | 212-N #2 Trench | - | |
| 216-N-4 | None | 212-P Swamp | - | |
| 216-N-5 | None | 212-P Trench | - | |
| 216-N-6 | None | 212-R Swamp | - | |
| 216-N-7 | None | 212-R Trench | - | |

APPENDIX

A. Explanation of Parts to the Report

Part I will cover the Purex Radioactive Liquid Waste Disposal Sites.

Part II will cover the "Z" Plant Radioactive Liquid Waste Disposal Sites.

Part III will cover the Redox Plant Radioactive Liquid Waste Disposal Sites.

Part IV will cover the "U" Plant Radioactive Liquid Waste Disposal Sites.

Part V will cover the "T" Plant Radioactive Liquid Waste Disposal Sites.

Part VI will cover the "B" Plant Radioactive Liquid Waste Disposal Sites.

Part VII will cover the "C" Plant, Hot Semi-Works, the 200 North Areas and miscellaneous.

B. Index for C Plant and North Areas Radioactive Liquid Waste Disposal Sites.

C. Sketches of "C" Area Waste Disposal Facilities.

D. Map of C Area Crib Sites (SK-2-18149).

E. Map of N Area Crib Sites (SK-2-17842).

F. Map of Waste Burial Gardens 200-E Area (H-2-31269).

G. Map of Waste Burial Gardens 200-W Area (H-2-31268).

APPENDIX B - Revised 10/19/59

## CRIB INDEX - C AREA

| Number | Description Appendix Sheet No. | Service | Use Dates From | Use Dates To | Status |
|---|---|---|---|---|---|
| 216-C-1 | C-1 1A | 201-C Process Condensate | 1/53 | | Inactive |
| 216-C-2 | C-2 | 291-C Stack & Filter Drum | 1/53 | | Active |
| 216-C-3 | C-3 | 271-C Chemical Wastes | 1/53 | 3/54 | Abandoned |
| 216-C-4 | C-4 | 276-C Organic Wastes | 7/55 | | Inactive |
| 216-C-5 | C-5 | 201-C High Salt Wastes | 3/55 | | Inactive |
| 216-C-6 | C-6 | 241-CX Waste Storage Con. | 9/55 | | Active |
| 216-C-7 | C-7 | 209-E Critical Lab Waste | Not Used | | New |
| 216-C-8 | C-8 | 271-CR Ion Exchange Waste | Not Used | | New |
| 216-C-9 | C-9 | C Area Process Cooling Wtr | 6/53 | | Active |

## CRIB INDEX - N AREA

| | | | | | |
|---|---|---|---|---|---|
| 216-N-1 | None | 212-N Basin Overflow | 1944 | 6/52 | Backfilled |
| 216-N-2 | None | 212-N Basin Cleanout | - | 1947 | Abandoned |
| 216-N-3 | None | 212-N Basin Cleanout | - | 6/52 | Inactive |
| 216-N-4 | None | 212-P Basin Overflow | 1944 | 6/52 | Backfilled |
| 216-N-5 | None | 212-P Basin Cleanout | - | 6/52 | Inactive |
| 216-N-6 | None | 212-R Basin Overflow | 1944 | 6/52 | Backfilled |
| 216-N-7 | None | 212-R Basin Cleanout | - | 6/52 | Inactive |

APPENDIX B - Revised 10/19/59

## Index of Burial Grounds and Gardens

| Designation | Service | Use Dates From | Use Dates To | Status |
|---|---|---|---|---|
| **200 East Area (H-2-31269)** | | | | |
| A. Dry Waste Burial Ground | | | | |
| #1 | Boxed solid wastes | 1945 | 1953 | Depleted |
| #12 | Boxed solid wastes | 1956 | - | Active |
| B. Industrial Burial Ground | | | | |
| #2 | Process equipment | 1947 | - | 9 of 11 Trenches Used |
| #5 | Process equipment | 1954 | 1957 | Depleted |
| #5A | Purex L Cell & Misc. Equip. | 1958 | | Depleted |
| #10 | Process equipment | 1955 | - | Active |
| C. Construction Burial Ground | | | | |
| #4 | 221-B Plant Modif. Wastes | 1955 | | Depleted |
| No number | 293-A and Purex Crane Construction Wastes | 1958 | | Included in Burning Ground |
| D. Miscellaneous Over Ground Storage | | | | |
| #9 (adjacent to east side of Industrial Burial Gargen #2) | Metal Recovery Equipment | 1953 | | Active |
| **200 West Area (H-2-31268)** | | | | |
| A. Dry Waste Burial Garden | | | | |
| #1 | Boxed solid wastes | 1944 | - | Depleted |
| #2 | Boxed solid wastes | - | 1954 | Depleted |
| #3 | Boxed waste & process equipment | 1954 | - | Active |
| #4 | Boxed solid wastes | Not used | | Reserved |
| B. Industrial Burial Garden | | | | |
| #1 | Process equipment | 1947 | 1954 | Depleted |
| #2 | Process equipment | Not Used | | Reserved |
| C. Regulated Storage Area | | | | |
| No Number | Contaminated Equipment | 1954 | - | Active |

HW-55176-PT VII
APPENDIX C-1
SHT NO. 1
JLP 10-9-59

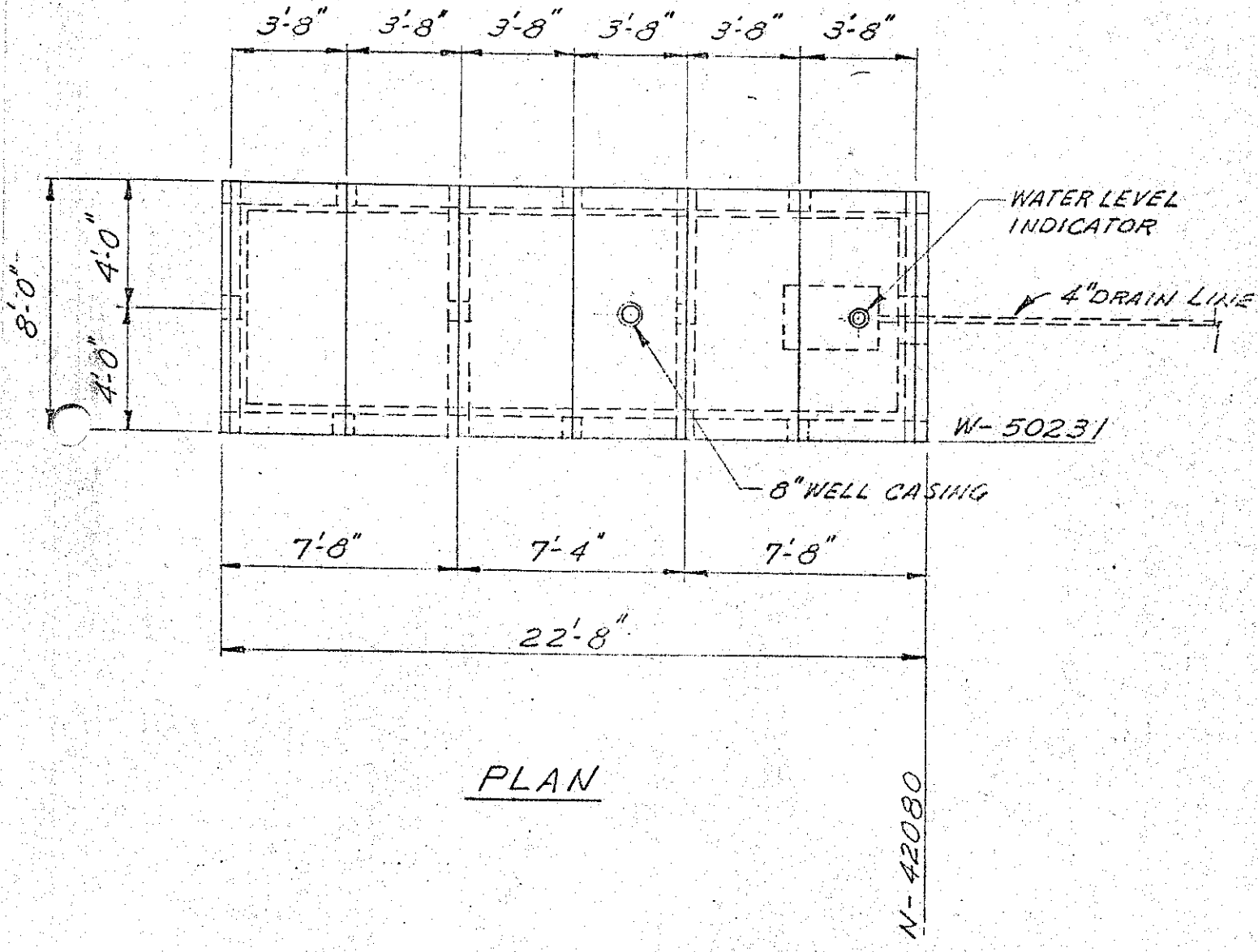


PLAN

216-C-1

H-2-4037

APPENDIX
SHT. NO. 2
10-9-59

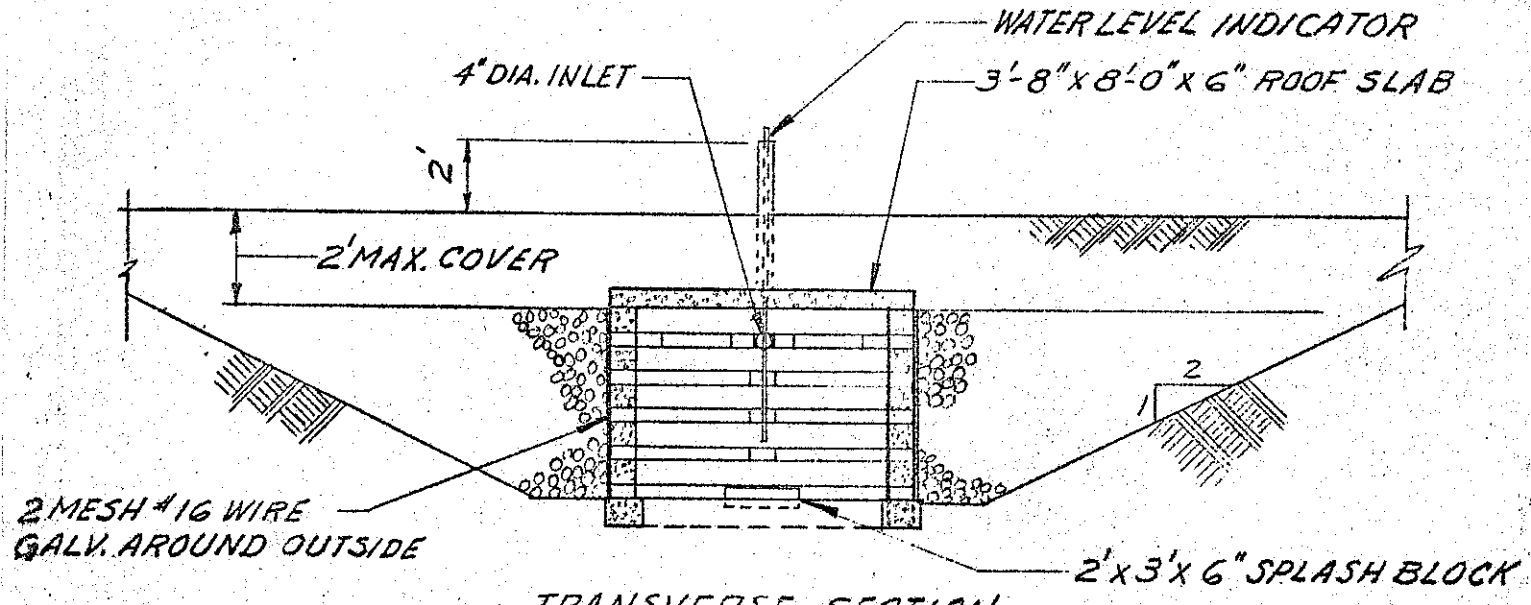


TRANSVERSE SECTION

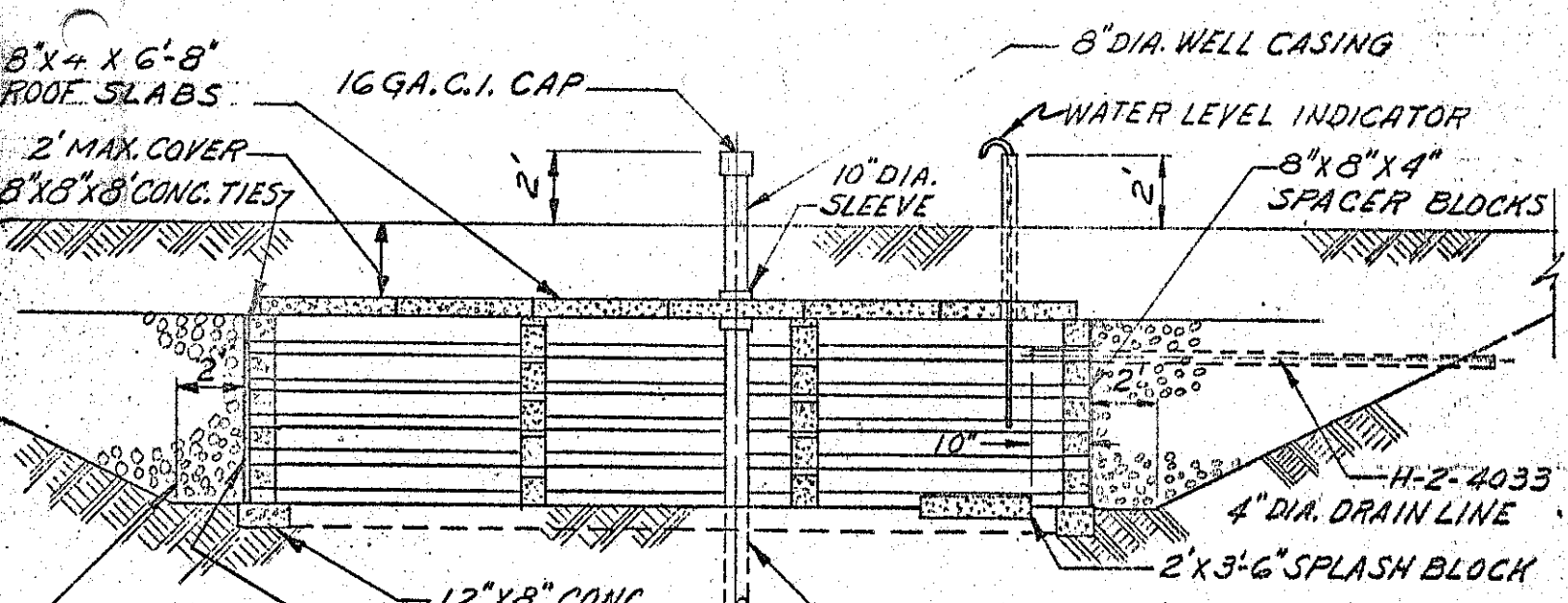


LONGITUDINAL SECTION

216-C-1

H-2-4037

HW-55176-PT VII
APPENDIX C-2
JJS 10-8-59

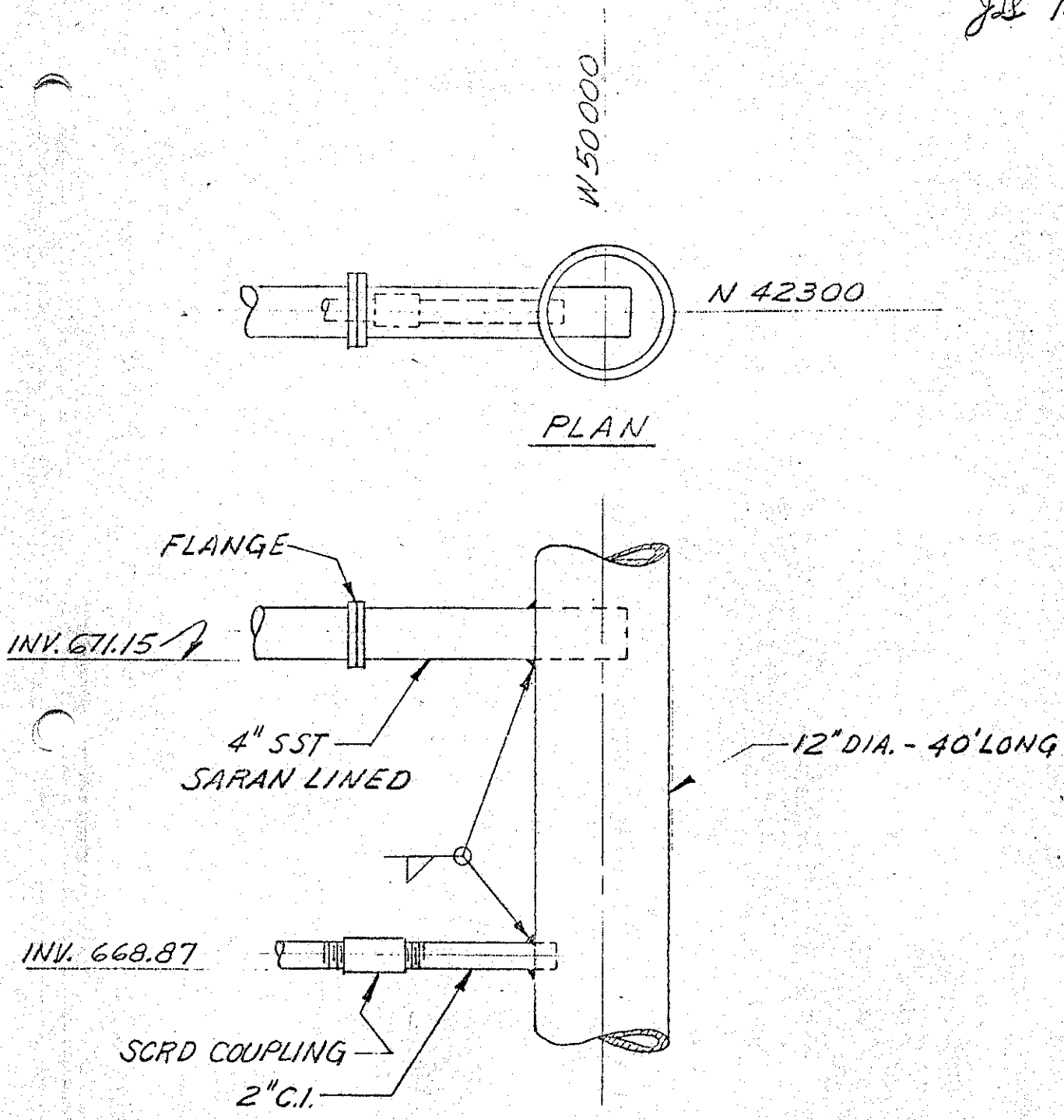


216-C-2

H-2-4033

APPENDIX C-3
JO 10-8-59

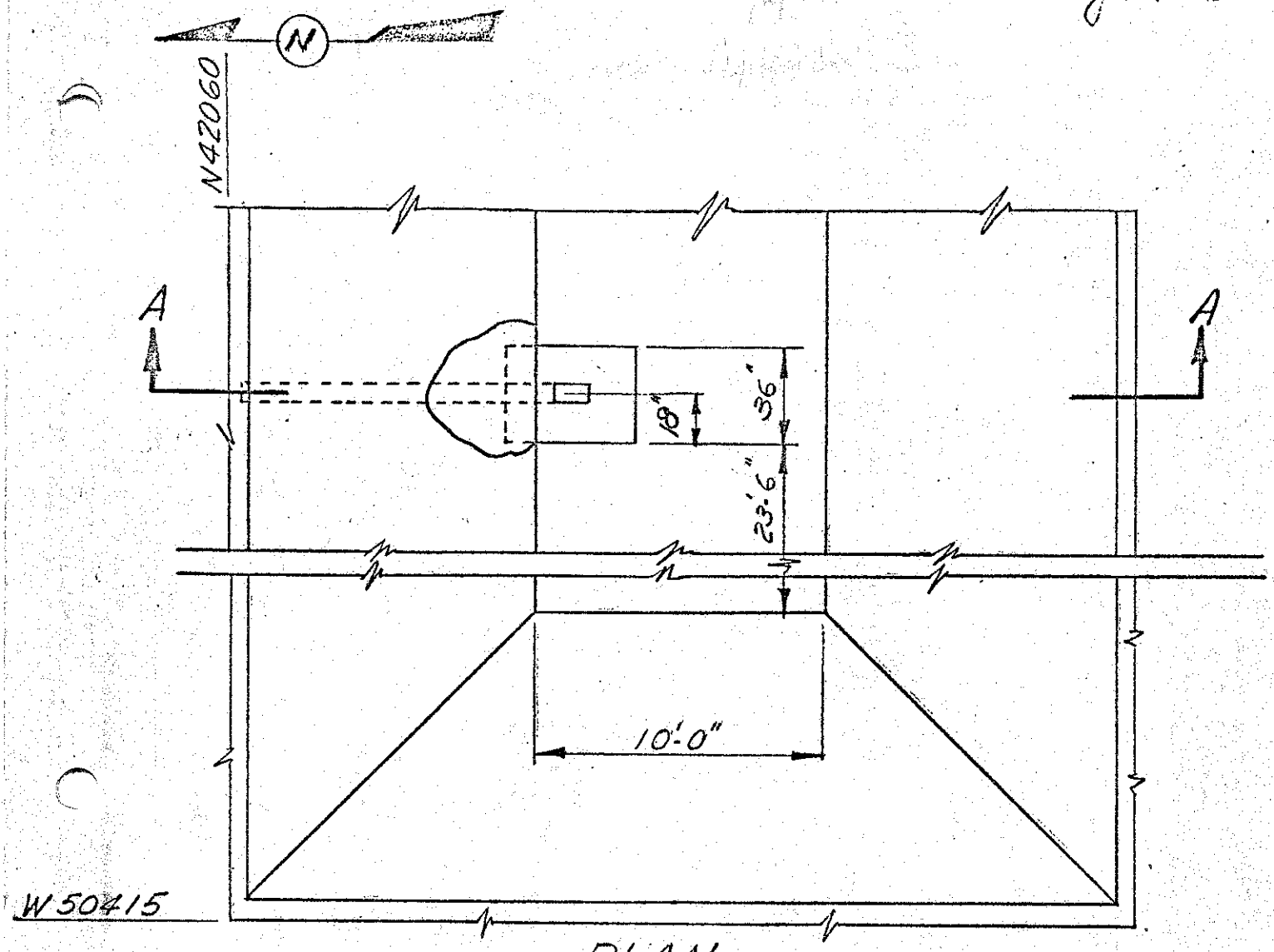


PLAN

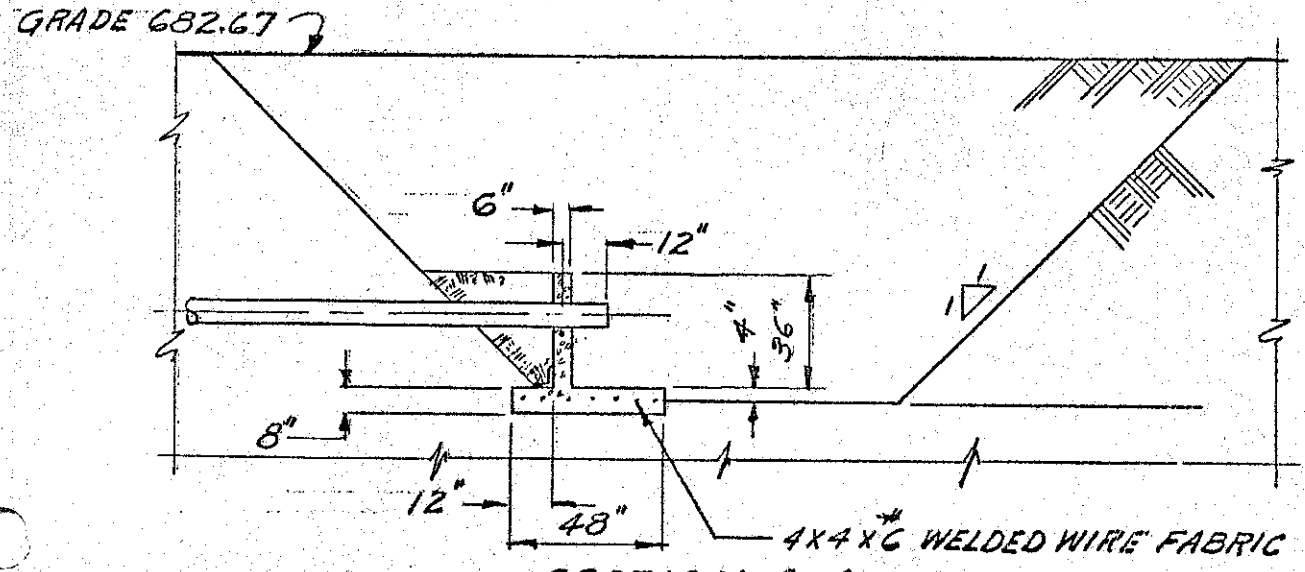


SECTION A-A

H-2-4034

216-C-3

4

HW-55116-PTVL
APPENDIX C-4
JR 10-8-59

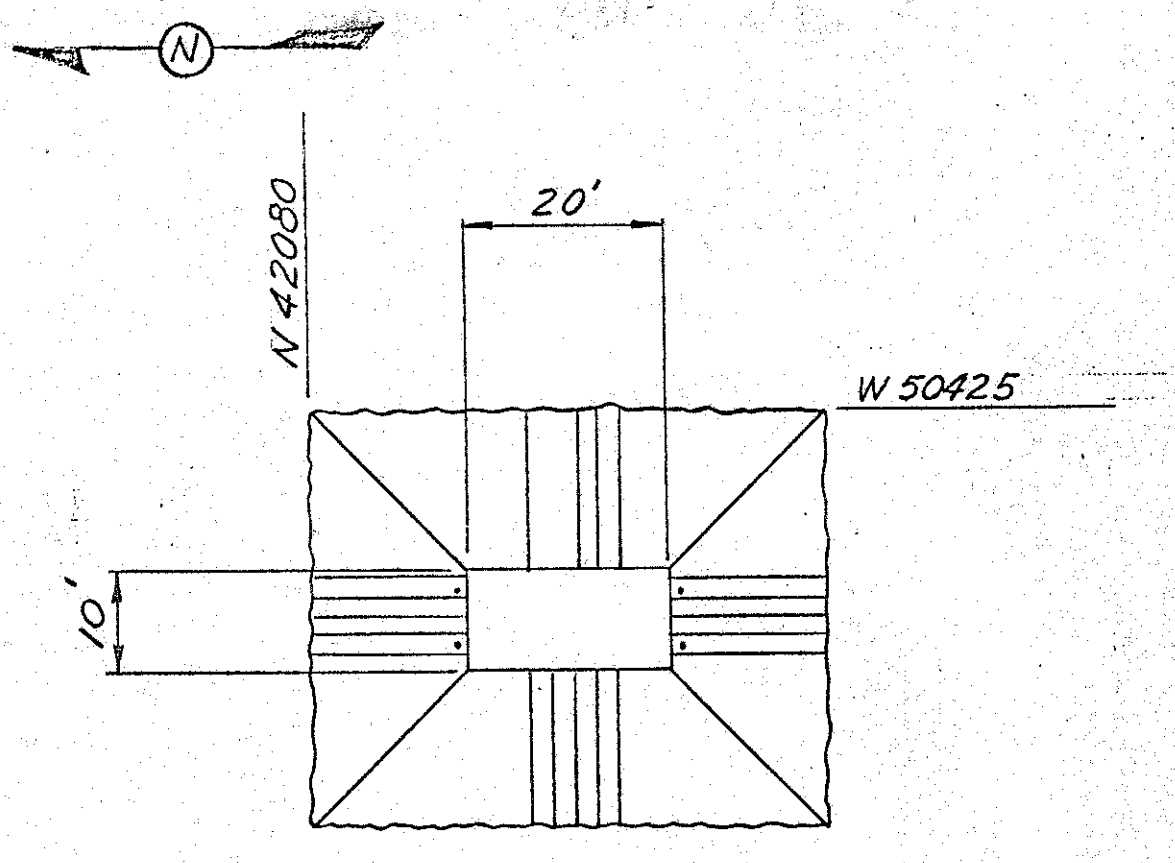


PLAN

FOR LONGITUDINAL & TRANSVERSE SECTION - SEE 216-C-6 CRIB

216-C-4

H-2-4010

5

HW-55176-PT II
APPENDIX C-5
JD 10-8-59

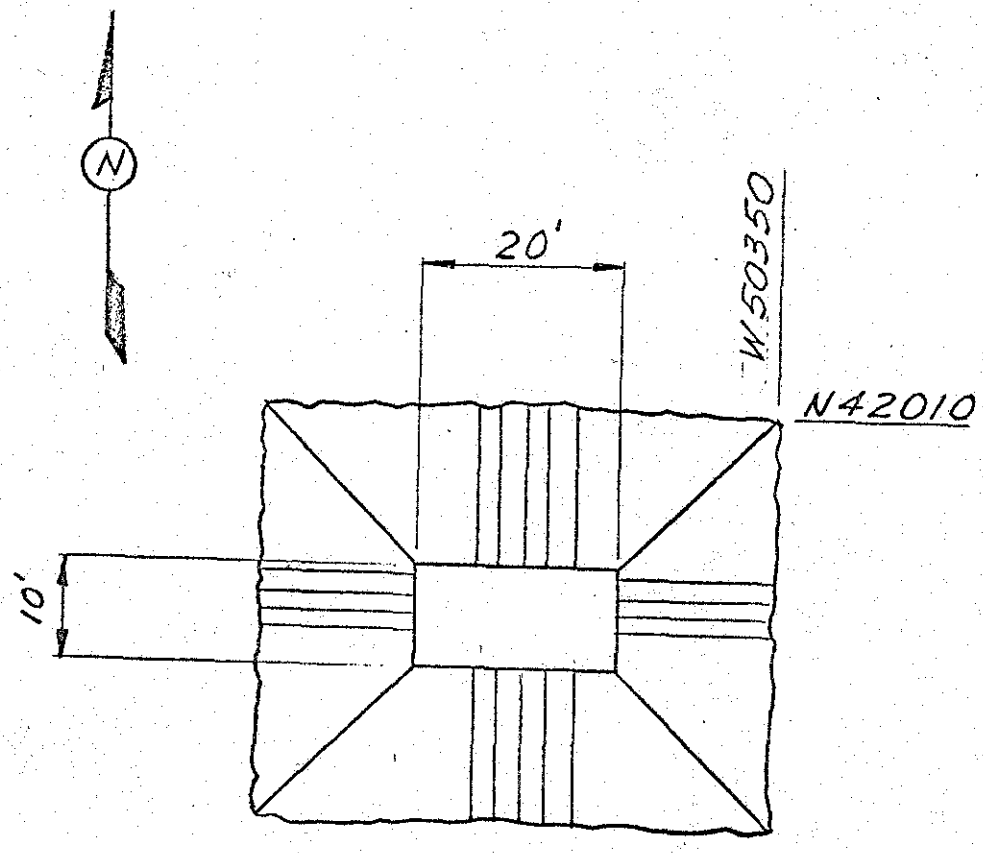


PLAN

FOR LONGITUDINAL & TRANSVERSE SECTION - SEE 216-C-6 CRIB

216-C-5
H-2-4010

6

HW 35176-PT VII
APPENDIX C-6
JR 10-7-59

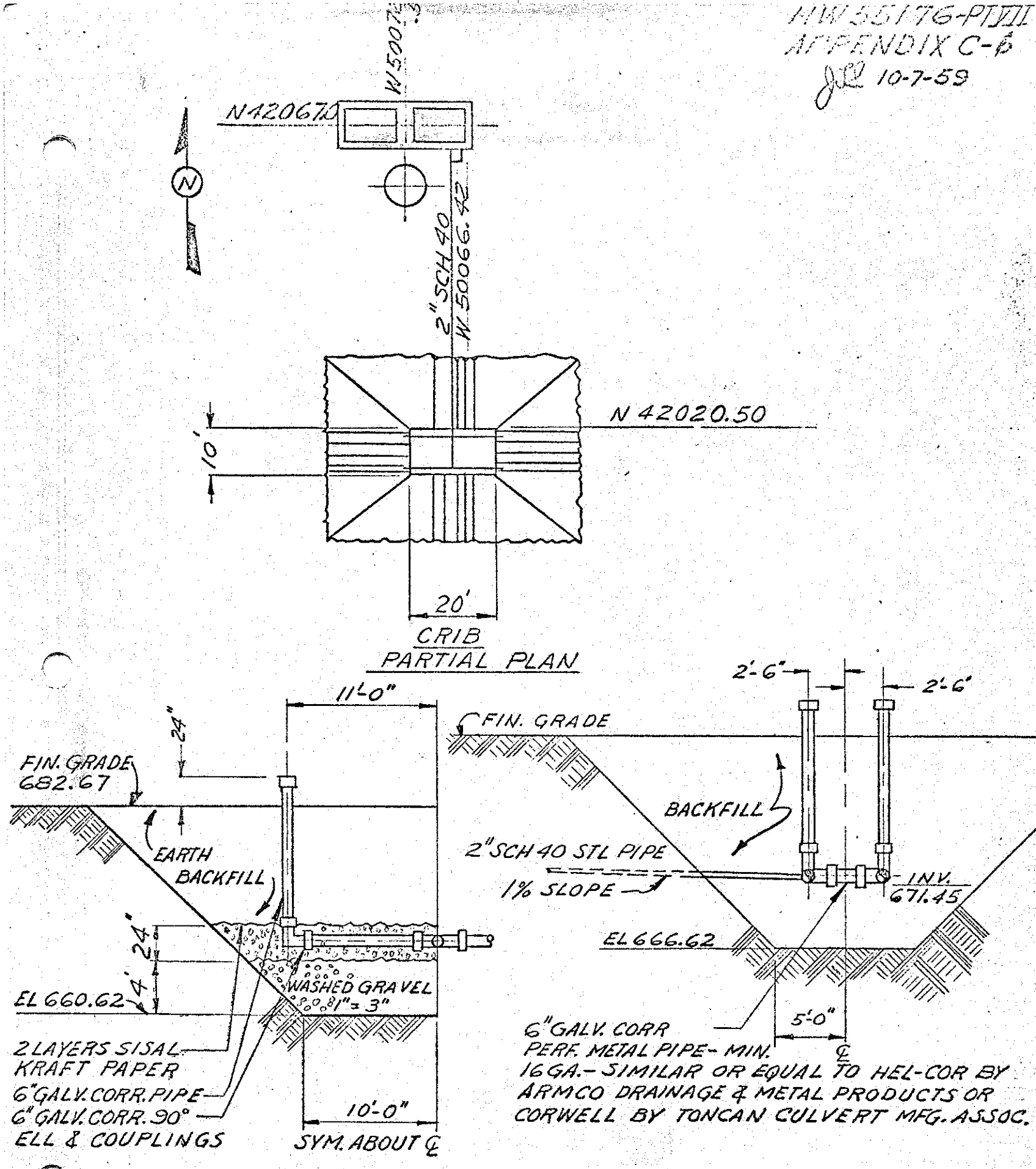


216-C-6
H-2-4425

7

HW-55116-PTKD
APPENDIX C-7
JHL 10-8-59

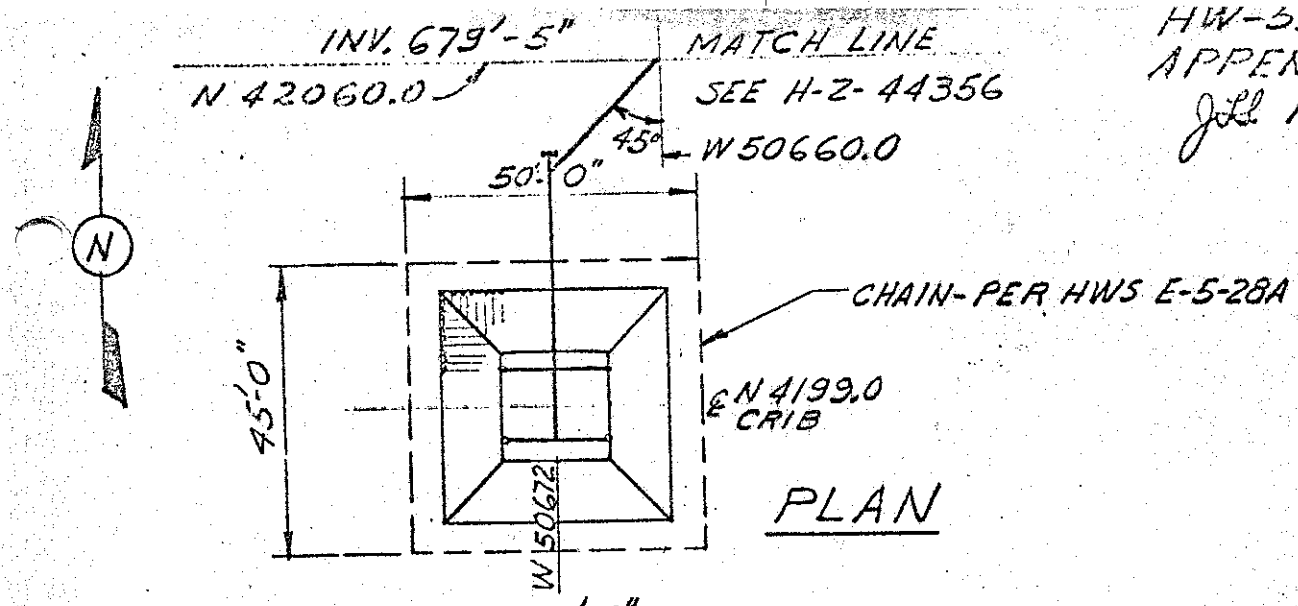


PLAN

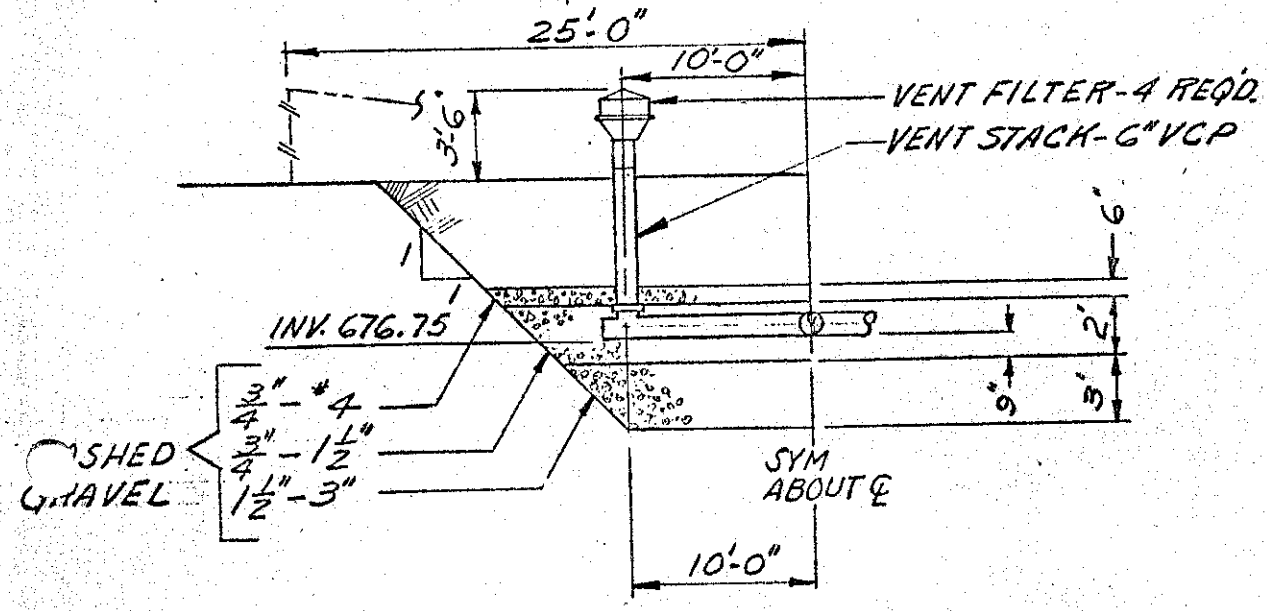


LONGITUDINAL SECTION

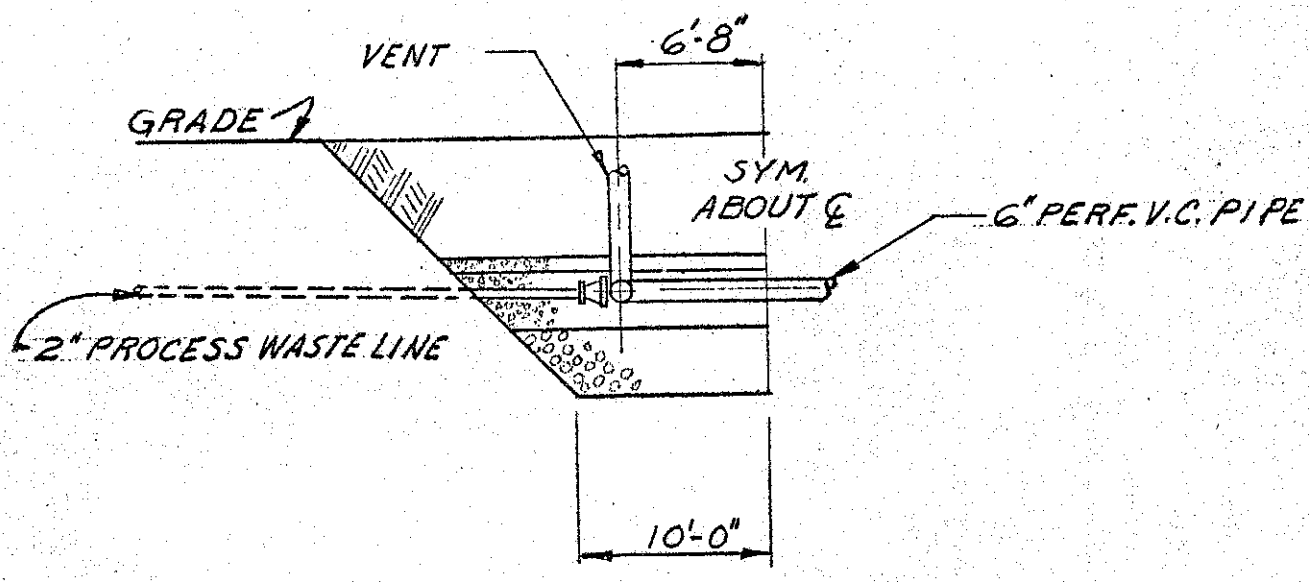


TRANSVERSE SECTION

216-C-7

H-2-44336

8

HW-55176-PTVII
APPENDIX C-8
JTL 10-9-59

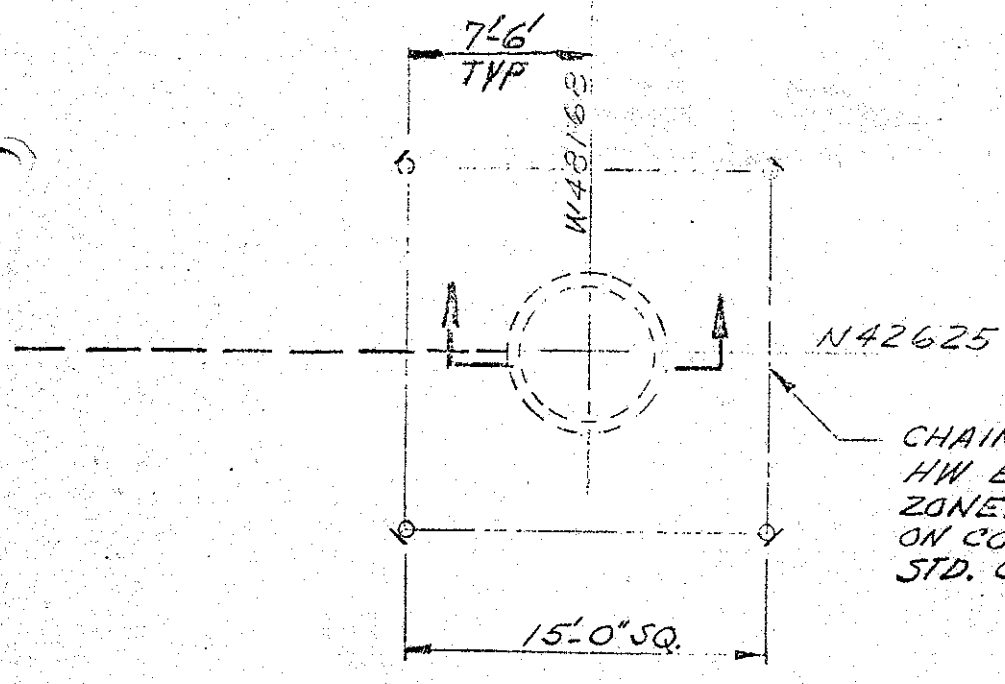


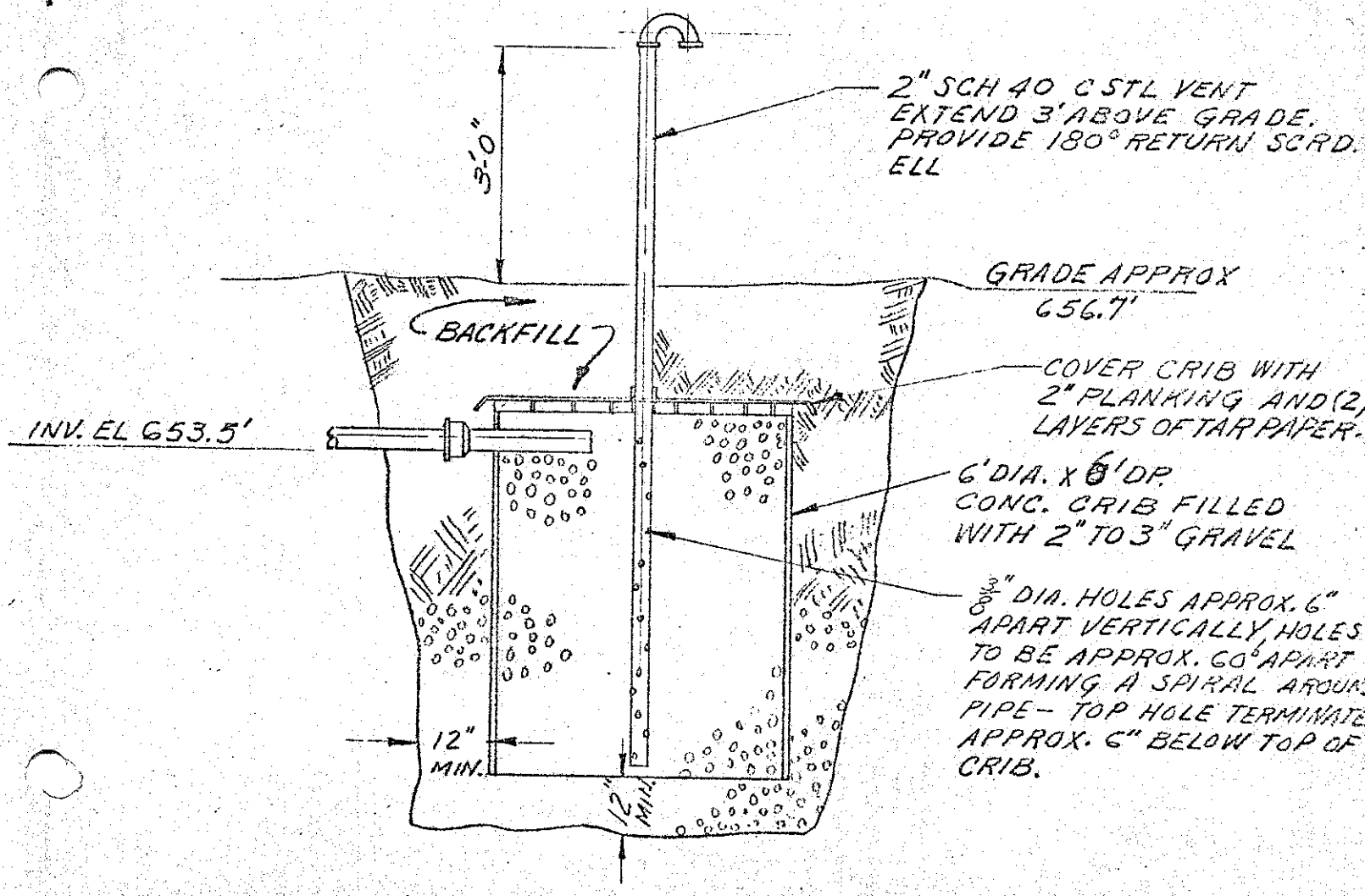


216-C-8

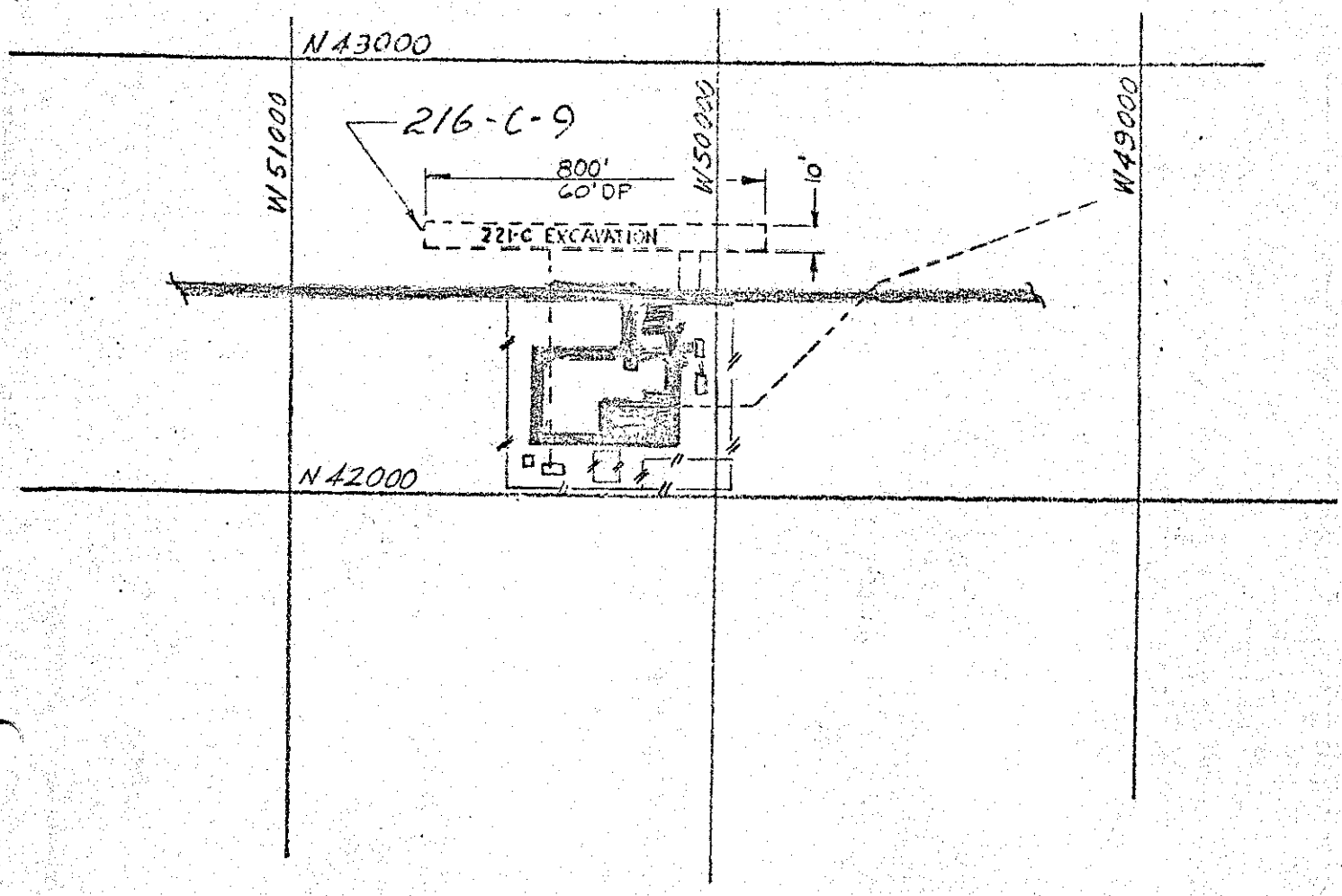


H-2-4010

216-C-9

HW-55176-P(VIII)
APPENDIX-"D"

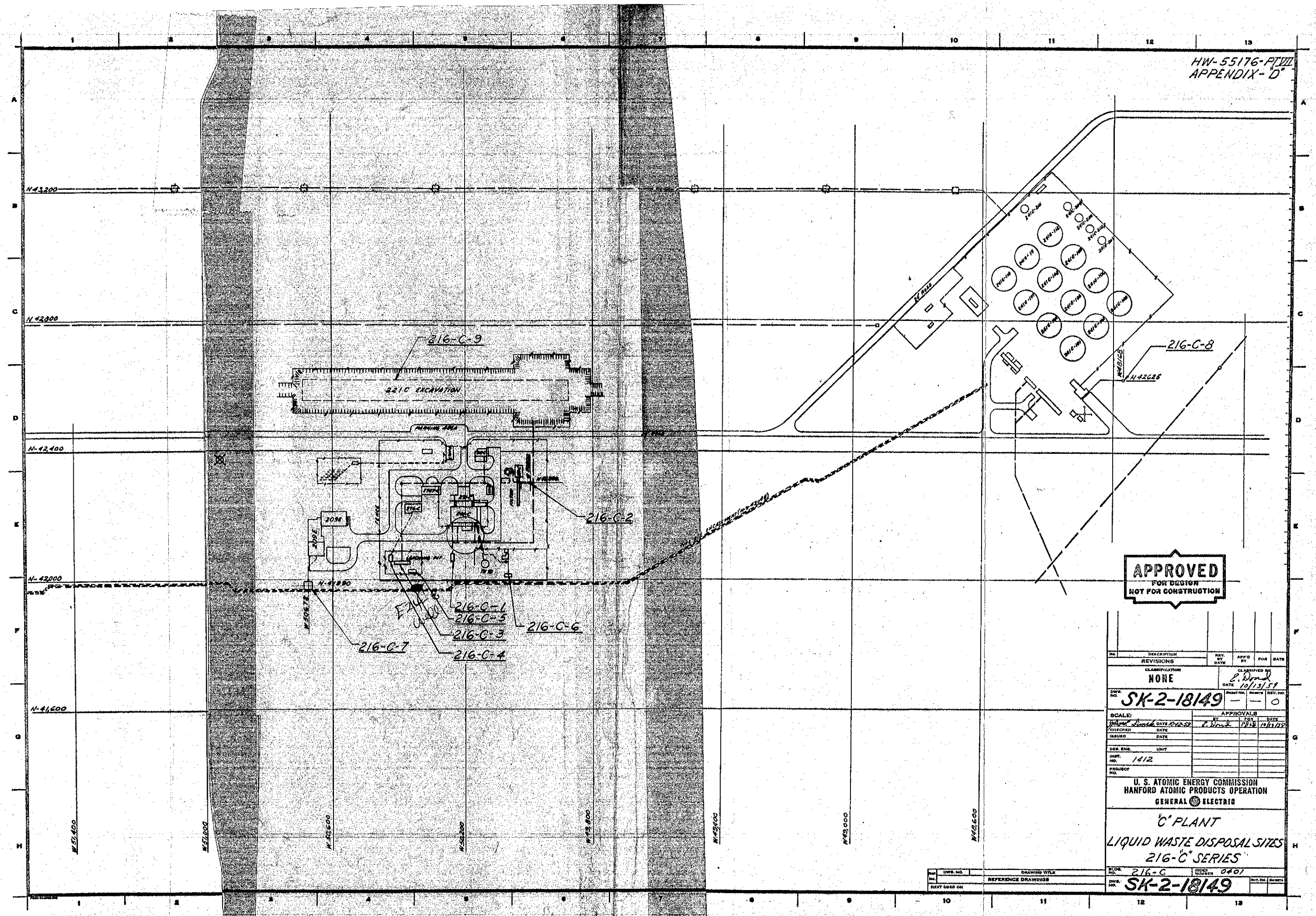

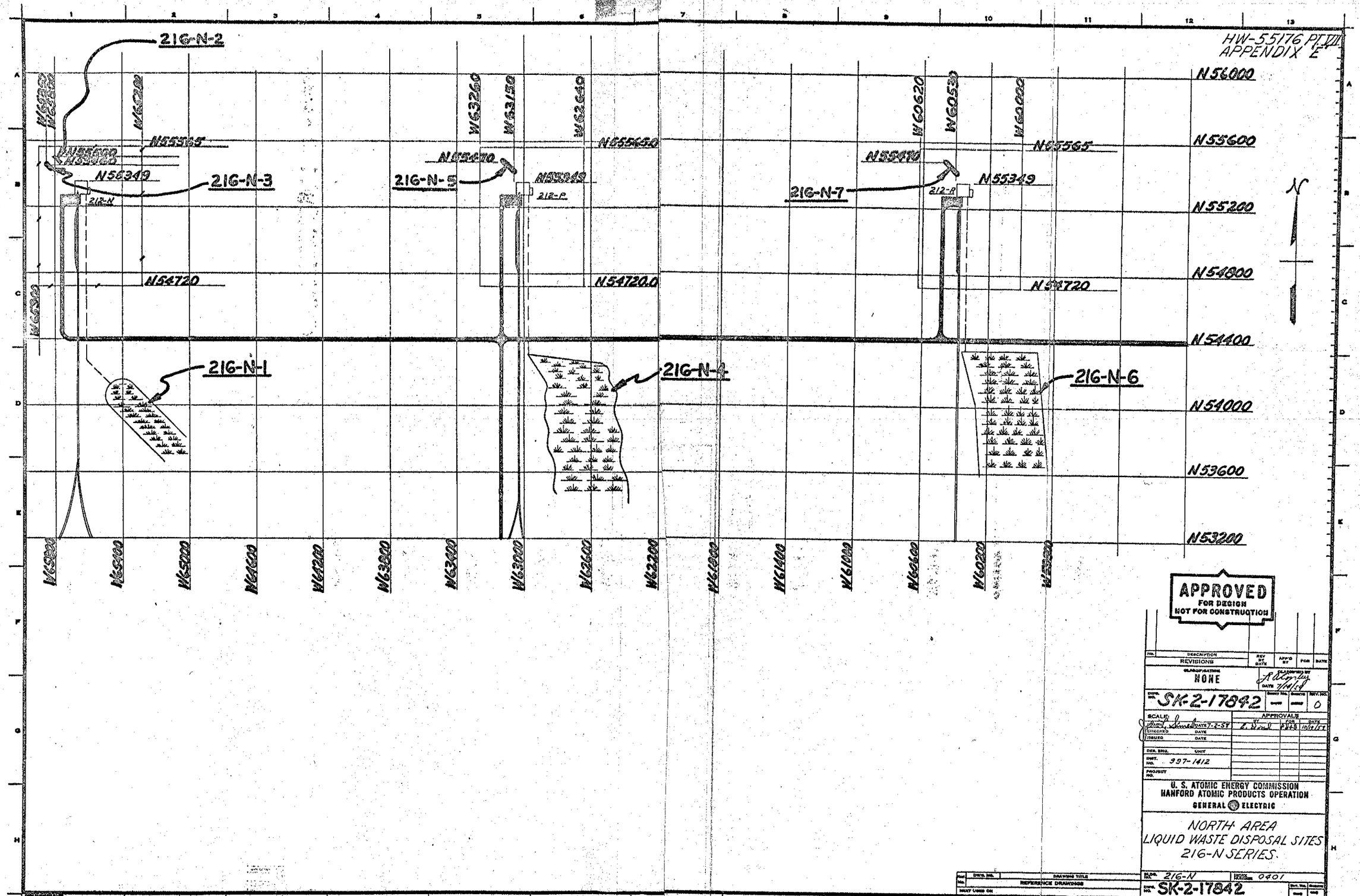


APPROVED
FOR DESIGN
NOT FOR CONSTRUCTION

| No. | DESCRIPTION | REV BY DATE | APP'D BY | FOR | DATE |
|---|---|---|---|---|---|
| | REVISIONS | | | | |

CLASSIFICATION: NONE
DATE 7/14/54

DWG. NO. SK-2-17842 | SHEET NO. — | SHEETS — | REV. NO. 0

SCALE:
DRAWN: DATE 7-2-54
CHECKED: DATE
ISSUED: DATE

APPROVALS

| BY | FOR | DATE |
|---|---|---|
| | | |

DES. ENG. UNIT
INST. NO. 997-1412
PROJECT NO.

U. S. ATOMIC ENERGY COMMISSION
HANFORD ATOMIC PRODUCTS OPERATION
GENERAL ELECTRIC

NORTH AREA
LIQUID WASTE DISPOSAL SITES
216-N SERIES.

BLDG. NO. 216-N | WORK ORDER 0401
DWG. NO. SK-2-17842 | SHT. NO. — | SHEETS —

| No. | DWG. NO. | DRAWING TITLE |
|---|---|---|
| | | REFERENCE DRAWINGS |

MUST CHECK ON

DESC. HW-55176 - PT VII
APPENDIX "F"

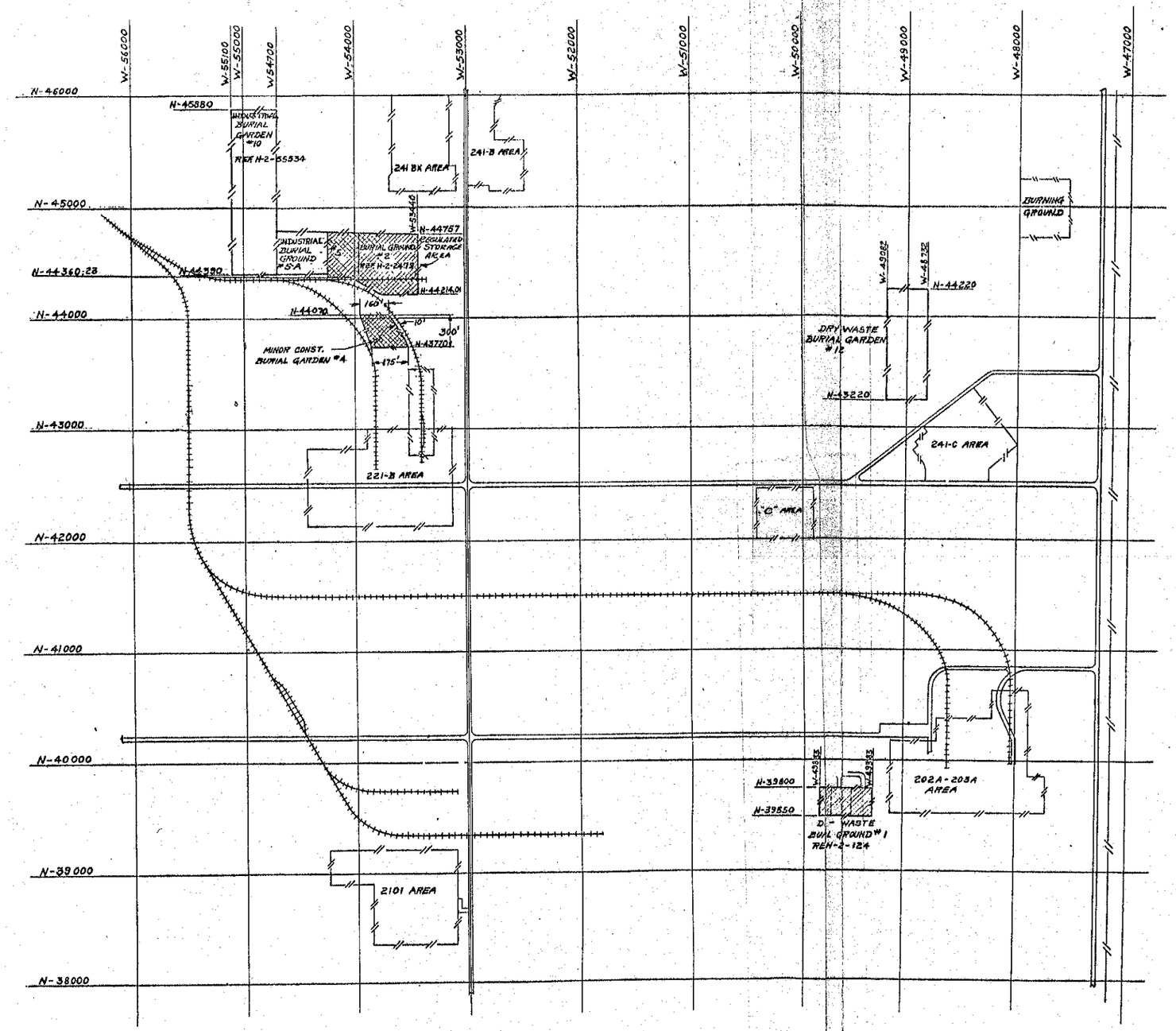


"LEGEND:

DEPLETED SITES.

APPROVED

| No. | DESCRIPTION | REV BY DATE | APPD BY | FOR | DATE |
|---|---|---|---|---|---|
| | REVISIONS | | | | |

CLASSIFICATION: NONE

CLASSIFIED BY: L.M. Marquis DATE 9-22-59

DWG. NO. H-2-31269 — SHEET NO. — SHEETS — REV. NO. 0

SCALE: NONE

APPROVALS

| | BY | FOR | DATE |
|---|---|---|---|
| DRAWN: P. BARNES DATE 9-24-59 | | | |
| CHECKED DATE | | | |
| ISSUED DATE 9-22-59 | | | |

DES. ENG. UNIT

INDEX NO. 1392

PROJECT NO.

U. S. ATOMIC ENERGY COMMISSION
HANFORD ATOMIC PRODUCTS OPERATION
GENERAL ELECTRIC

WASTE
BURIAL GARDENS

BLDG. NO. 200 EAST — HOUSE NUMBER 0401

DWG. NO. H-2-31269

| PREF. DWG. NO. | DRAWING TITLE |
|---|---|
| REFERENCE DRAWINGS | |

NEXT USED ON

3

HW 55176 PT VII
APPENDIX G

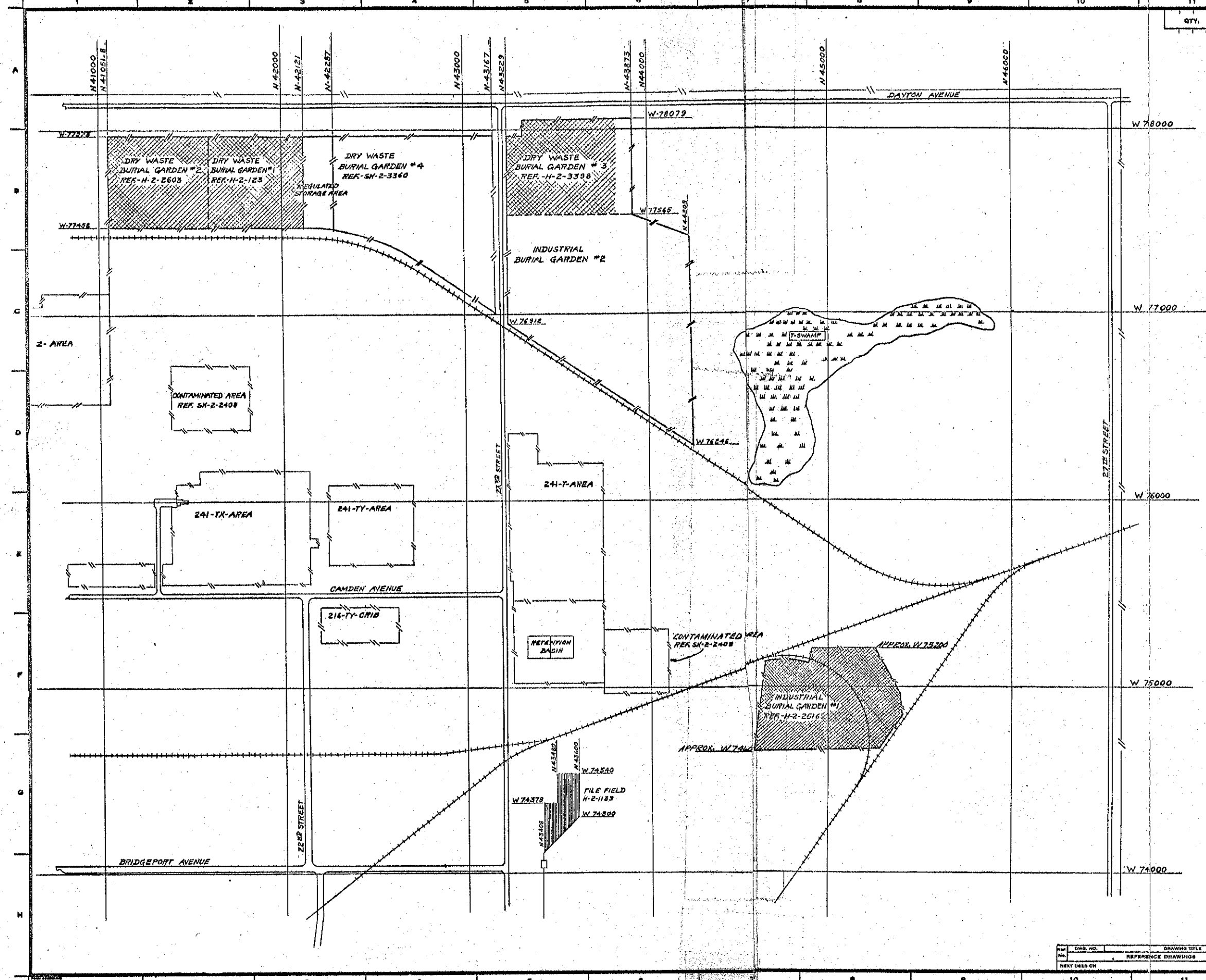


LEGEND:
DEPLETED SITES.

APPROVED

| NO. | DESCRIPTION | REV BY DATE | APP'D BY | FOR | DATE |
|---|---|---|---|---|---|
| | REVISIONS | | | | |

CLASSIFICATION: NONE
CLASSIFIED BY: DATE 9-23-57
DWG. NO. H-2-31268
SUBST. NO. — SUBSID — REV. NO. 0

SCALE: NONE
DRAWN: R. BARNES DATE 9-21-57
CHECKED DATE
ISSUED DATE 9-26-57
DES. SYM. UNIT
SHEET NO. 1392
PROJECT NO.

APPROVALS: BY / FOR / DATE

U. S. ATOMIC ENERGY COMMISSION
HANFORD ATOMIC PRODUCTS OPERATION
GENERAL ELECTRIC

# WASTE BURIAL GARDENS

BLDG. NO. 200 WEST
HIGH HOUSEKEEPING 0401
DWG. NO. H-2-31268

DWG. NO. | DRAWING TITLE
REFERENCE DRAWINGS
NEXT USED ON