OFFICE OF RIVER PROTECTION
P.O. Box 450, MSIN H6-60
Richland, Washington 99352

APR 2 5 2016

16-ECD-0003 REISSUE

Ms. Alexandra K. Smith, Program Manager
Nuclear Waste Program
Washington State
Department of Ecology
3100 Port of Benton Blvd.
Richland, Washington 99354

Ms. Smith:

SUBMITTAL OF HIGH-LEVEL WASTE FACILITY AND PRETREATMENT FACILITY SYSTEM DESIGN DESCRIPTION DOCUMENTS

Reference: WA7890008967, "Dangerous Waste Portion of the Hanford Facility Resource Conservation and Recovery Act Permit for the Treatment, Storage, and Disposal of Dangerous Waste, Operating Unit 10, 'Waste Treatment and Immobilization Plant.'"

This letter is being reissued due to the omission of Appendices B through D of 24590-HLW-3ZD-HFH-00001, Rev. 0, and an extra page in Appendix B of 24590-HLW-3ZD-HFP-00001, Rev. B, in copies of the Attachment which was entered into the Integrated Document Management System and also distributed electronically.

This letter transmits the following updated system design descriptions for inclusion in the Administrative Record:

- *HLW [High-Level Waste] Canister Decontamination Handling (HDH) System Design Description*, 24590-HLW-3ZD-HDH-00001, Rev. 0
- *HLW Filter Cave Handling (HFH) System Design Description*, 24590-HLW-3ZD-HFH-00001, Rev. 0
- *HLW Melter Feed Process (HFP) and Concentrate Receipt Process (HCP) System Design Description*, 24590-HLW-3ZD-HFP-00001, Rev. B
- *HLW Melter Process (HMP) System Design Description*, 24590-HLW-3ZD-HMP-00001, Rev. A
- *HLW Canister Pour Handling (HPH) System Design Description*, 24590-HLW-3ZD-HPH-00001, Rev. 0
- *HLW Melter Cave Support Handling (HSH) System Design Description*, 24590-HLW-3ZD-HSH-00001, Rev. 0
- *Pretreatment Facility Ultrafiltration Process System Design Description*, 24590-PTF-3ZD-UFP-00001, Rev. A

These system design descriptions are being submitted to Washington State Department of Ecology to replace earlier versions of system descriptions that were incorporated into the Dangerous Waste Permit Administrative Record.

If you have any questions, please contact Jan B. Bovier, Environmental Compliance Division, (509) 376-9630.

Kevin W. Smith
Manager

ECD:GMN

Attachment

cc w/attach:
B.L. Curn, BNI
B.G. Erlandson, BNI
S. Greagor, BNI
M. McCullough, BNI
S.K. Murdock, BNI
Administrative Record (WTP H-0-8)
BNI Correspondence
Environmental Portal, LMSI

cc electronic:
J. Cantu, Ecology
A.S. Carlson, Ecology (1 hard copy)
M.E. Jones, Ecology
J.K. Perry, MSA
A.C. McKarns, RL

cc w/o attach:
J. Cox, CTUIR
R.S. Skeen, CTUIR
S.L. Dahl, Ecology
D. McDonald, Ecology
G.P. Bohnee, NPT
K. Niles, Oregon Energy
E.D. MacAlister, RL
R. Jim, YN

Attachment
16-ECD-0003 REISSUE
(1,207 Pages)

High-Level Waste Facility and Pretreatment Facility System Design Description Documents

Issued by
RPP-WTP PDC

HLW Canister Decontamination Handling (HDH) System Design Description

Document title:

Document number: 24590-HLW-3ZD-HDH-00001

Revision number: 0

Type: ☑ System Design Description
☐ Facility Design Description

Originator(s): Jeffrey Ladwig Brian Johnson Scott Peters

Checked by: Phil Townsend

Checker's signature: _____ (Signature) 7-6-15 (Date)

Concurrence: Mark Johnson

Concurrence signature: _____ (Manager of Production Engineering Signature) 7/16/15 (Date)

Concurrence: Ian Milgate

Concurrence signature: Natalie Harkey for Ian Milgate 7/16/2015 (Project Technical Director and Design Authority Signature / Date)

Approved by: Natalie Harkey

Approver's position: Systems Engineering Manager

Approver's signature: _____ (Signature) 7/16/2015 (Date)

Validation

Signatures below indicate acceptance of the requirements established in Section 3 as the complete and correct set of requirements for this system relative to the requirement sources for which the Requirement Developer is responsible.

Appl.	Requirement Area	Requirement Developer	Signature	Date
☑	Architectural Design	Joel Evans		3/23/15
☑	Civil/Structural Design	Joel Evans		3/12/15
☑	Controls & Instrumentation Design	Wayne Underhill C.J. Winslow for David Palmer	per email	3/12/15
☑	Commissioning			3/11/15
☐	Electrical Design & AHJ			
☐	Fire Protection Systems Design			
☑	Fire Protection Engineering	BEN JOHNSON		3/24/15
☑	HVAC Design	JULIAN LEAM		03.16.15
☑	Mechanical Handling Design	JULIAN LEAM		03.11.15
☑	Mechanical Systems Design	JULIAN LEAM		03.11.15
☑	Plant Design	Travis Vrooman		3/17/15
☑	Process Engineering	R Valle		3/18/15
☐	Interface (External)			
☐	Interface (Internal)			
☑	System Functions and Requirements	P. Townsend		6-27-15
☑	Equipment Environmental Qualification	G. RAJAGOPAL	G. Rajagopal	03-11-15
☑	Equipment Seismic Qualification	M. Hall M. HALL	M. Hall	3-17-15
☑	Materials Engineering / Technology	Grant Marr		3/17/15
☐	Plant Software Design			
☑	Reliability, Availability, Maintainability, Inspectability (Plant Engr)	M. Miller		3-16-15
☑	Environmental Permitting (ESH)	C.J. Winslow for per email Brent Peck		3/9/15
☐	Fire Safety (ESH)	Roger J. Landon		3/9/15
☑	Nuclear Safety Engineering	M Englmeier		3-17-15
☐	Criticality Safety			
☑	Radiological Engineering	Eric Tetter		3-17-15
☑	Industrial Safety/Hygiene (ESH)**	C.J. Winslow for Stephen Lee	per Email	3/17/15
☑	Mission (WTP Contract functional/performance rqmts)	C.J. Winslow for Brian Gifford per email		3/10/15
☑	Operations, Maintenance, Human Factors	C.J. Winslow for Dan Rovira per email		3/17/15
☑	Quality Assurance	V. Cleary-Ivanoff		3/16/15
☐	Safeguards & Security			
☐	Startup			
☐	Transportation & Logistics			

* Validation not required for alpha/preliminary design description documents.
** C.J. Winslow for Dale Gargoly per Email qlw 4/8/15

History Sheet

Rev	Reason for revision	Revised by
0	Initial Issue. Supersedes 24590-HLW-3YD-HDH-00002 Rev 5, *System Description for HLW Canister Decontamination Handling System (HDH).*	J. Ladwig/ B. Johnson

Contents

Validation ii

History Sheet iii

1 Introduction 1

1.1 System Identification 1

1.2 Limitations and Scope 1

1.3 Ownership and Maintenance 2

1.4 Definitions/Glossary 2

1.5 Acronyms and System Designators 3
1.5.1 Acronyms 3
1.5.2 System Designators 5

2 General Overview 5

2.1 System Functions/Safety Functions 9

2.2 System Classification 17

2.3 Basic Operational Overview 17

3 Design Requirements 18

3.1 Requirements 18

3.2 Bases 19

3.3 References 19

3.4 General Requirements 19
3.4.1 Mission and Functional / Performance Requirements (Including States/Modes) 19
3.4.2 Nuclear Safety, ALARA, Environmental, and Other Regulatory Requirements 26
3.4.3 System Interface Requirements 29
3.4.4 Other Technical, Specialty, Operations and Maintenance Requirements 30

3.5 Vessel and Bogie Requirements 36
3.5.1 Mission and Functional / Performance Requirements (Including States/Modes) 36
3.5.2 Nuclear Safety, ALARA, Environmental, and Other Regulatory Requirements 42
3.5.3 System Interface Requirements 46
3.5.4 Other Technical, Specialty, Operations and Maintenance Requirements 51

3.6 Piping Requirements 55
3.6.1 Mission and Functional / Performance Requirements (Including States/Modes) 55
3.6.2 Nuclear Safety, ALARA, Environmental, and Other Regulatory Requirements 57
3.6.3 System Interface Requirements 58
3.6.4 Other Technical, Specialty, Operations and Maintenance Requirements 59

3.7 Crane Requirements 60
3.7.1 Mission and Functional / Performance Requirements (Including States/Modes) 60
3.7.2 Nuclear Safety, ALARA, Environmental, and Other Regulatory Requirements 62
3.7.3 System Interface Requirements 63
3.7.4 Other Technical, Specialty, Operations and Maintenance Requirements 63

3.8 Grapples 66
3.8.1 Mission and Functional / Performance Requirements (Including States/Modes) 66

3.8.2 Nuclear Safety, ALARA, Environmental, and Other Regulatory Requirements 67
3.8.3 System Interface Requirements 68
3.8.4 Other Technical, Specialty, Operations and Maintenance Requirements 68

3.9 Swabbing, Canister Rack, and Glovebox Requirements 68
3.9.1 Mission and Functional / Performance Requirements (Including States/Modes) 68
3.9.2 Nuclear Safety, ALARA, Environmental, and Other Regulatory Requirements 73
3.9.3 System Interface Requirements 74
3.9.4 Other Technical, Specialty, Operations and Maintenance Requirements 74

3.10 Shield Hatches and Shield Doors 77
3.10.1 Mission and Functional / Performance Requirements (Including States/Modes) 77
3.10.2 Nuclear Safety, ALARA, Environmental, and Other Regulatory Requirements 78
3.10.3 System Interface Requirements 81
3.10.4 Other Technical, Specialty, Operations and Maintenance Requirements 81

3.11 Monitoring and Controls Requirements 84
3.11.1 Mission and Functional / Performance Requirements (Including States/Modes) 84
3.11.2 Nuclear Safety, ALARA, Environmental, and Other Regulatory Requirements 85
3.11.3 System Interface Requirements 86
3.11.4 Other Technical, Specialty, Operations and Maintenance Requirements 87

3.12 Other Structures, Systems, and Components Requirements 95
3.12.1 Mission and Functional / Performance Requirements (Including States/Modes) 95

3.13 Relevant Codes and Standards 96
3.13.1 Codes of Record 96
3.13.2 WTP Design Criteria, Design Guides, and General Specifications 98

4 System Description 102

4.1 Configuration Information 102
4.1.1 Description of System, Subsystems, and Major Components 103
4.1.2 Boundaries and Interfaces 153
4.1.3 Physical Layout and Location 155
4.1.4 Principles of Operation 156
4.1.5 System Reliability Features 158
4.1.6 System Control Features 158

4.2 Operations 162
4.2.1 Initial Configuration (Pre-startup) 162
4.2.2 System Startup 162
4.2.3 Normal Operations 163
4.2.4 Off-Normal Operations 163
4.2.5 System Shutdown 163
4.2.6 Safety Management Programs and Administrative Controls 163

4.3 Testing and Maintenance 163
4.3.1 Temporary Configurations 163
4.3.2 TSR-Required Surveillances 163
4.3.3 Non-TSR Inspections and Testing 163
4.3.4 Maintenance 163

4.4 Supplemental Information 163

5 References 164

5.1 Source / Basis References 164

5.2 Other References 165

5.3 System Design Documents 171

Appendices

Appendix A Test Objectives, Conditions, and Acceptance Criteria A-1
Appendix B Descriptions of System Functional Flow and Interactions B-1
Appendix C Active Safety Instruments and Functions C-1
Appendix D System Procedures D-1
Appendix E System History E-1

Tables

Table 2-1: Functional Analysis and Crosswalk to Requirements 12
Table 3-1: HDH Equipment and Components Design Life 20
Table 3-2: HDH System Seismic Design Categories 22
Table 3-3: HDH System Safety Design Categories 26
Table 3-4: Remotely Replaceable/Maintainable Equipment/Components 30
Table 3-5: HDH System Applicable Codes and Standards 97
Table 3-6: WTP Design Criteria, Design Guides, and General Specifications Applicable to HDH 99
Table 4-1: System HDH Interfaces 154
Table 4-2: System Monitoring Instrumentation 158

Figures

Figure 2–1: HDH System Context Diagram 7
Figure 2–2: HDH System Simplified Process Flow Diagram 8
Figure 2–3: HDH System Simplified Mechanical Flow Diagram 9
Figure 2–4: HDH System Functional Block Diagram 10
Figure 4-1: Canister Rinse Tunnel and Maintenance Area 104
Figure 4-2: Canister Decontamination Cave Elevation 107
Figure 4-3: Canister Decontamination Cave Plan View 108
Figure 4-4: Canister Storage Transfer Tunnel 110
Figure 4-5: System HDH Plan View 111

Figure 4-6: Decontamination Cave Crane....113
Figure 4-7: Rinse Bogie Maintenance Area Crane....114
Figure 4-8: Crane Maintenance Area Jib Crane....115
Figure 4-9: Crane Maintenance Shield Door....117
Figure 4-10: Rinse Bogie Maintenance Shield Door....118
Figure 4-11: 12 inch Shielded Personnel Access Door....120
Figure 4-12: Airlock Door....121
Figure 4-13: Canister Rinse Bogie and Vessel....123
Figure 4-14: Storage Tunnel Transfer Bogie....124
Figure 4-15: Typical Transfer Hatch Assembly....127
Figure 4-16: System HDH Hatch Locations....128
Figure 4-17: Canister Grapple....130
Figure 4-18: Canister Grapple Stand....131
Figure 4-19: Canister Weight Load Cell....132
Figure 4-20: Canister Storage Rack....133
Figure 4-21: Vessel Lid Through Wall Drive....134
Figure 4-22: Swabbing and Monitoring System....136
Figure 4-23: Posting Port and Glovebox....140
Figure 4-24: Shielded Window....141
Figure 4-25: Master Slave Manipulator....142
Figure 4-26: Cerium IV Addition Tank....144
Figure 4-27: Rinse Bogie Vessel....146
Figure 4-28: Canister Decontamination Vessels Removable Coil Assembly....148
Figure 4-29: Waste Neutralization Vessel....149
Figure 4-30: Simplified Process Flow Diagram for the HLW Canister Decontamination System....157

1 Introduction

1.1 System Identification

This system design description (SDD) defines the technical and functional/performance requirements of the high-level waste (HLW) canister decontamination handling (HDH) system. This document details the waste treatment requirements, environmental compliance requirements, and authorization basis requirements of the HDH system as they are currently known and understood. This SDD describes the process, functional, and mechanical handling requirements of the HDH system, including:

- Mechanical handling equipment design
- Services and utility requirements, operating materials and supplies, and other external interfaces
- Operations limits and design bases
- Other criteria and requirements pertinent to the design of the HDH system, exclusive of internal systems

The HDH system receives an IHLW canister from the HPH system, rinses the canister, decontaminates the canister, swabs the canister to ensure proper decontamination, and then transfers the canister to the HEH system. The boundaries, system interfaces, and functional description of the HDH system is provided in Sections 2 and 3.4.3.

1.2 Limitations and Scope

The scope of this document is to provide an authoritative source for the collected set of requirements applicable to the HDH system, inclusive of interface requirements with other systems. The SDD scope is limited to HDH system features that support production and/or protect equipment, personnel, and the environment. The SDD is prepared in accordance with 24590-WTP-3DP-G04B-00093, *System and Facility Design Descriptions*. The intended use of these collected requirements is to establish the following:

- Inform the HDH system design effort
- Provide a validated basis upon which to confirm implementation of design requirements
- Provide the expected means of verification for requirements, including those that are post-construction (i.e., startup and commissioning test objectives and acceptance criteria)

All requirements established in this document are intended to be verified to be implemented in design and/or physical configuration using a graded approach commensurate with importance and risk.

Where numeric values are provided within requirements in Section 3, these values are provided without additional margin. For example if a value is established in the Basis of Design, no attempt is made to remove any margin that may or may not have gone into the establishment of that value, neither has any margin been added. Where values are stated as minimums or maximums, there is no expectation that additional margin be applied in the verifications that the design requirements have been met. Testing required to be performed in accordance with external codes and standards must follow the rules established in those documents.

This document is intended to be used in support of design development, design verification, turnover, startup testing, and commissioning activities. This document will be maintained current relative to changes in source requirements documents. Updates shall be made concurrent with these changes to source requirements, or implementation shall be tracked for completion in accordance with 24590-WTP-GPG-ENG-0170, *Impact Evaluation*.

Engineers are expected to be able to use the requirements in Section 3 of this document as input for design development without recourse to the upper-tier source documents or searches of the Design Criteria Database (Technical Requirements Management System). Design engineers are still required to ensure that requirements contained with the discipline/functional standards incorporated by reference in Section 3 are followed. These documents contain additional criteria that are based on applications of external codes/standards, corporate best practices, and engineering management expectations for a consistent approach to design.

Certain requirement statements in this document are preceded by a "**[HOLD]**" notation. This notation is used when there are unresolved technical issues, known inconsistencies among source requirements, or other management suspensions of work requiring resolution. Requirements with the "**[HOLD]**" notation may be used to proceed with preliminary or committed design (with inclusion of appropriate holds) but shall not be used in support of fabrication or construction until the "**[HOLD]**" is removed.

The contents of Section 4 are being developed in a phased approach in support of future operations and maintenance. At this revision, only the contents of Sections 4.1.1 through 4.1.4 and 4.1.6 have been updated and verified. Sections 4.1.5, 4.2, 4.3 and 4.4 are currently reserved and will be updated in a later phase after the work to support completion of these sections has been completed.

1.3 Ownership and Maintenance

The Design Authority (DA) organization is responsible for the preparation and maintenance of this document through turnover of the included systems to Operations. Thereafter, maintenance of this document is the responsibility of the Plant Engineering organization; however, the Engineering DA organization retains responsibility for the establishment and definition of design requirements.

1.4 Definitions/Glossary

Confinement - For consistency, regardless of usage elsewhere, *confinement* is used in this document to denote the controls used to prevent or minimize the release or migration of airborne contaminants, including aerosols, hazardous vapors, or gases.

Containment - For consistency, regardless of usage elsewhere, *containment* is used in this document to denote the controls used to prevent or minimize the release or migration of liquid or liquid-entrained contaminants.

Primary confinement/containment - The structures, systems, or components (SSC) and their associated boundaries that confine/contain airborne and liquid contaminants under normal conditions.

Secondary confinement/containment - The structures or other design features that capture and prevent further spread or migration of airborne/liquid contaminants once they have escaped primary confinement/containment.

1.5 Acronyms and System Designators

1.5.1 Acronyms

AARH	arithmetic average roughness height
ADR	ALARA design review
AHJ	authority having jurisdiction
AISC	American Institute of Steel Construction
ALARA	as low as reasonably achievable
ANS	American Nuclear Society
ANSI	American National Standards Institute
API	American Petroleum Institute
ASME	American Society of Mechanical Engineers
ASTM	American Society for Testing and Materials
AWS	American Welding Society
BOD	Basis of Design
BPVC	Boiler and Pressure Vessel Code
CCTV	closed circuit television
CMA	crane maintenance area
CMAA	Crane Manufacturers Association of America
CMTR	certified material test report
CR	condition report
CTN	component tag number
D&D	decontamination and decommissioning
DA	Design Authority
DBE	design basis event
DOE	US Department of Energy
DSA	documented safety analysis
DVR	design verification report
ENG	Engineering
EQ	equipment qualification
EQD	equipment qualification datasheet
EQP	equipment qualification package
GTC	general test criteria
HLW	High-Level Waste (Facility)
ICN	integrated control network
IEEE	Institute of Electrical and Electronics Engineers
IESNA	Illuminating Engineering Society of North America
IHLW	immobilized high-level waste
ISA	International Society of Automation

LFL	lower flammability limit
LOI	local operator interface
MAWP	maximum allowable working pressure
MR	material requisition
MSM	master-slave manipulator
MTG	metric tons of glass
NFPA	National Fire Protection Association
ORD	Operations Requirements Document
PDSA	preliminary documented safety analysis
PSV	pressure safety valve
PTZ	pan/tilt/zoom camera
P&ID	piping and instrumentation diagram
QAM	Quality Assurance Manual
ROIN	requirement object identification number
RPP	Radiation Protection Program
SC	safety class
SC-I	seismic category-I
SC-II	seismic category-II
SC-III	seismic category-III
SC-IV	seismic category-IV
SDD	system design description
SL	severity level
SPAD	shielded personnel access door
SRD	Safety Requirements Document
SS	safety significant
SSC	structure, system, or components
SWAB	interfacing swabbing equipment
TAC	test acceptance criteria
TBD	to be determined
TDH	total dynamic head
WAC	Washington Administration Code
WAI	waste acceptance impacting
WCP	waste compliance plan
WIQP	WAI Item Qualification Plan
WQR	waste form qualification report
WSF	waste acceptance impacting screening form
WTP	Hanford Tank Waste Treatment and Immobilization Plant
WVDP	West Valley Demonstration Project

1.5.2 System Designators

C5V	C5 ventilation system
DIW	demineralized water system
FPW	fire protection water system
HDH	HLW canister decontamination handling system
HEH	HLW canister export handling system
HFP	HLW melter feed process system
HOP	HLW melter offgas treatment process system
HPH	HLW canister pour handling system
HPS	high pressure steam system
ISA	instrument service air system
LTE	lighting electrical system
LVE	low voltage electrical (480V and below) system
MHJ	mechanical handling control system
NAR	nitric acid reagent system
PCJ	process control system
PCW	plant cooling water system
PJV	pulse jet ventilation system
PTJ	process and mechanical handling CCTV system
PVV	process vessel vent exhaust system
PWD	plant wash and disposal system
RLD	radioactive liquid waste disposal system
SHR	sodium hydroxide reagent system
UPE	uninterruptible power electrical system

2 General Overview

The HDH system receives Immobilized High Level Waste (IHLW) canisters from the HLW Canister Pour Handling (HPH) system. The canister is rinsed with demineralized water in the canister rinse vessel before transfer into one of two decontamination vessels. In the decontamination vessel, the canister undergoes a heated chemical etching process using ceric nitrate, nitric acid, and instrument service air (ISA) system sparge air for mixing. The decontamination fluids are heated for the decontamination process using heat exchangers to pump hot water through coils inside the vessels. After the etching is complete, cold water is run through the coils to cool the decontamination fluids before transferring to the neutralization vessel. Hydrogen peroxide and sodium hydroxide are added to neutralize the waste in the neutralization vessel before transfer to the Radioactive Liquid Waste Disposal (RLD) system. The canister is sprayed with nitric acid and demineralized water (DIW) before transfer to visual inspection station. The canister is visually inspected for adhered glass and is then swabbed to measure removable contamination levels. If the canister passes visual inspection and swabbing, the canister is transferred to the HLW Canister Export Handling (HEH) system.

Figure 2–1 provides a contextual depiction of the HDH system in terms of its primary interrelationships with other systems and utilities. This diagram does not differentiate among some utilities that have both normal and safety service provisions. This diagram is used in support of functional and performance definition at the system level. Figure 2–2 provides a process flow diagram of the overall HDH system. Figure 2–3 provides a mechanical flow diagram of the overall HDH system. Blue arrows are used in these figures to highlight the primary flow path of the IHLW canister and the black arrows illustrate the supporting systems and utilities. Refer to Section 1.5.2 for the list of relevant system designators.

Figure 2–1: HDH System Context Diagram

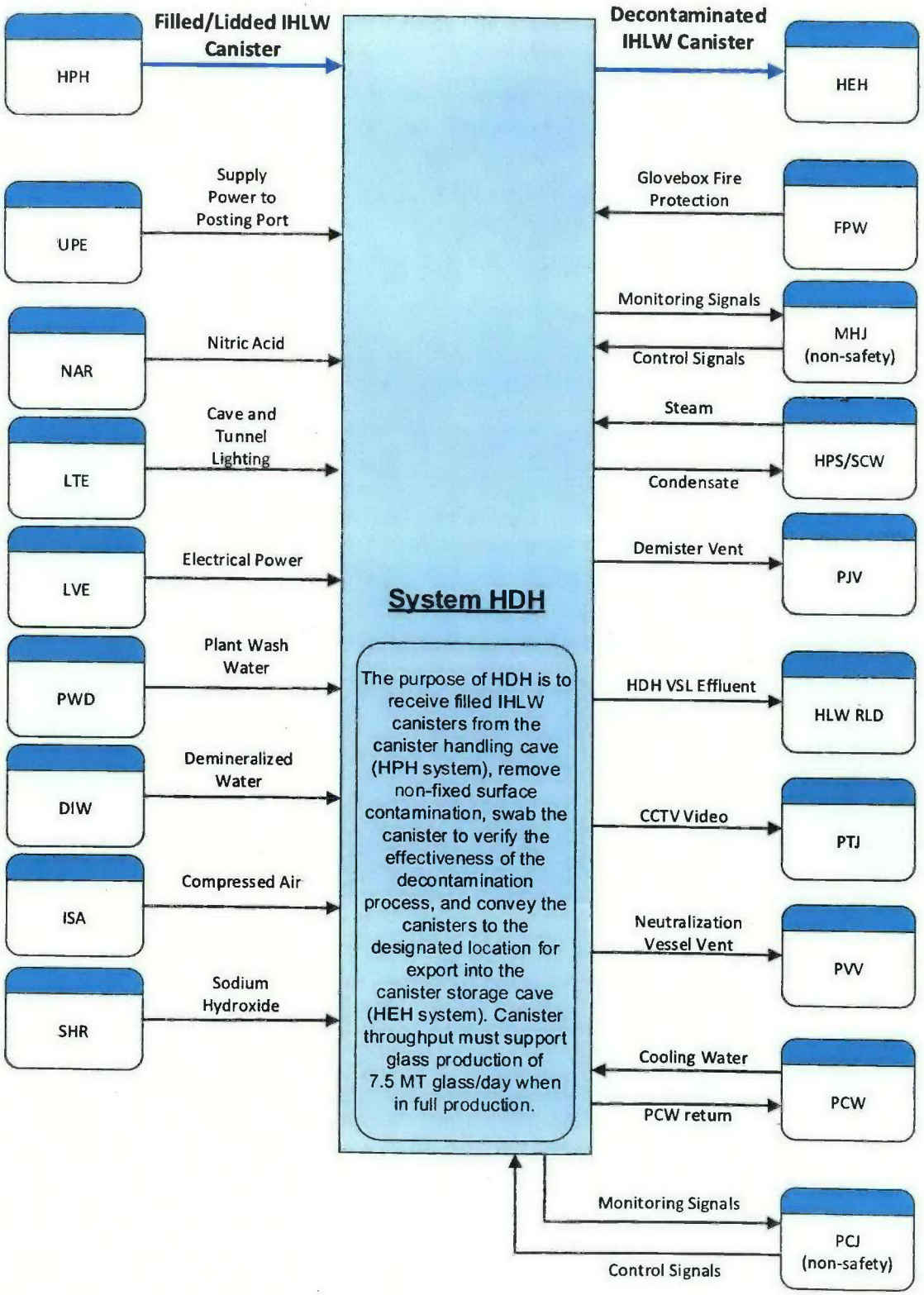

Figure 2–2: HDH System Simplified Process Flow Diagram

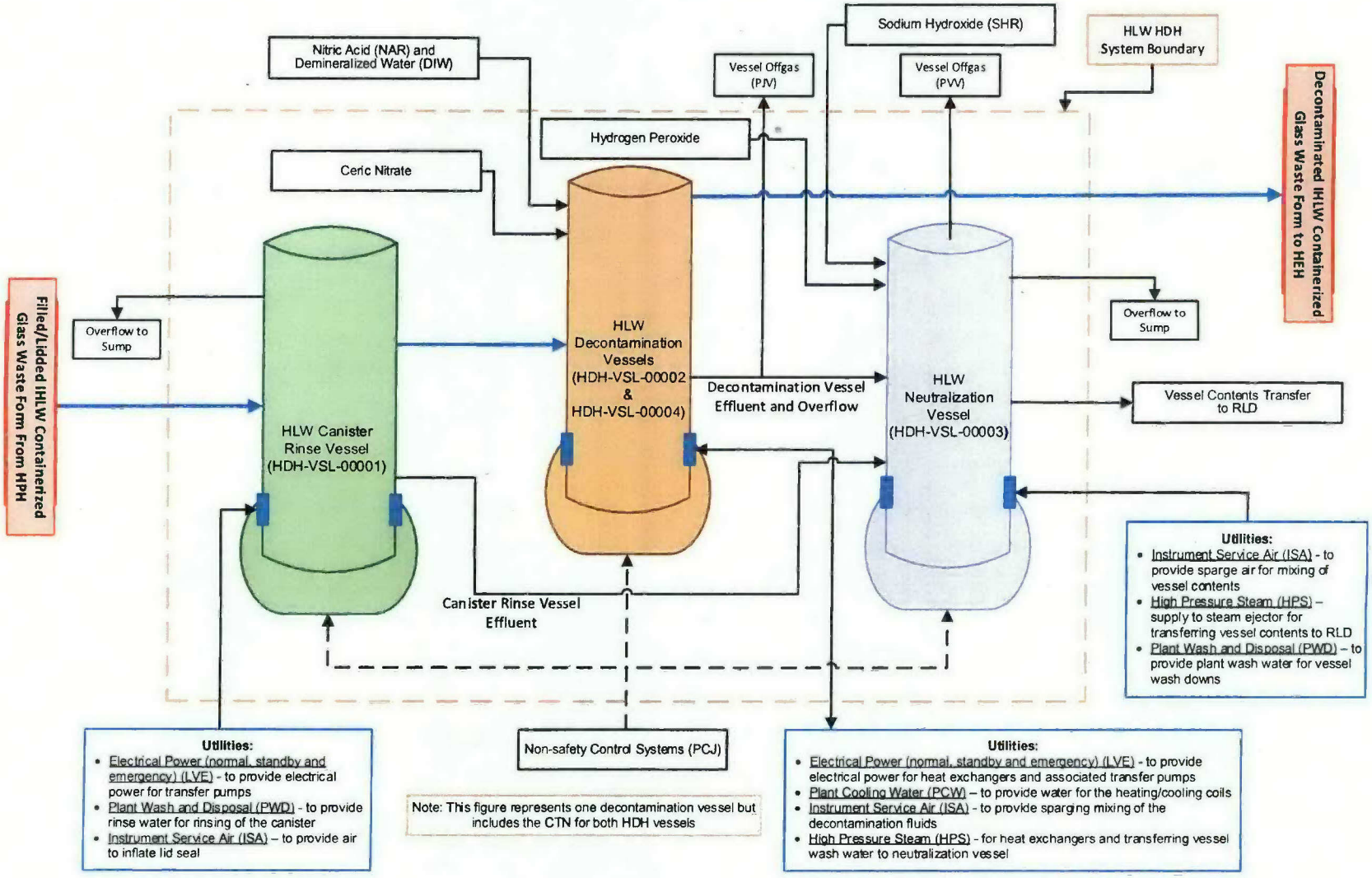

Figure 2–3: HDH System Simplified Mechanical Flow Diagram

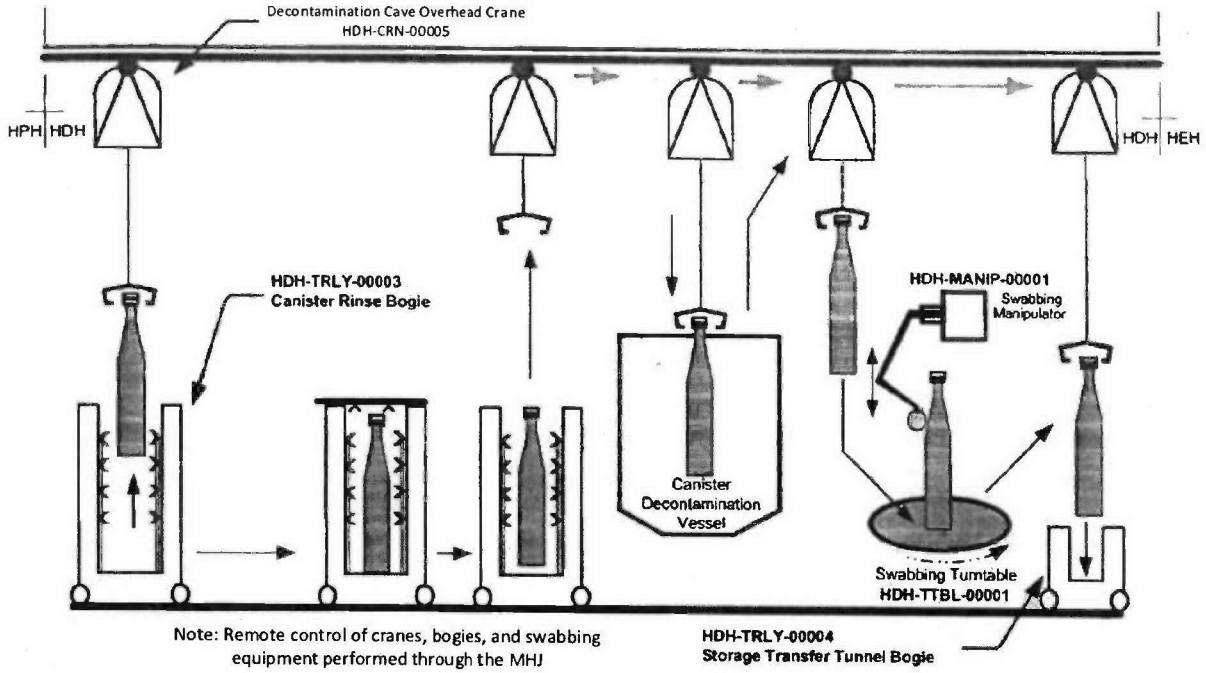

2.1 System Functions/Safety Functions

This section defines the HDH functions and attributes that need to be addressed by the system design. Figure 2–4 provides the functional block diagram for the HDH system, indicating the internal and external systems and utilities that provide the primary support or interface for that function. Section 3 provides the design and performance design requirements to meet both functional and other requirements.

System interfaces are provided for reference only. See Section 1.5.2 for the list of relevant system designators.

Figure 2–4: HDH System Functional Block Diagram

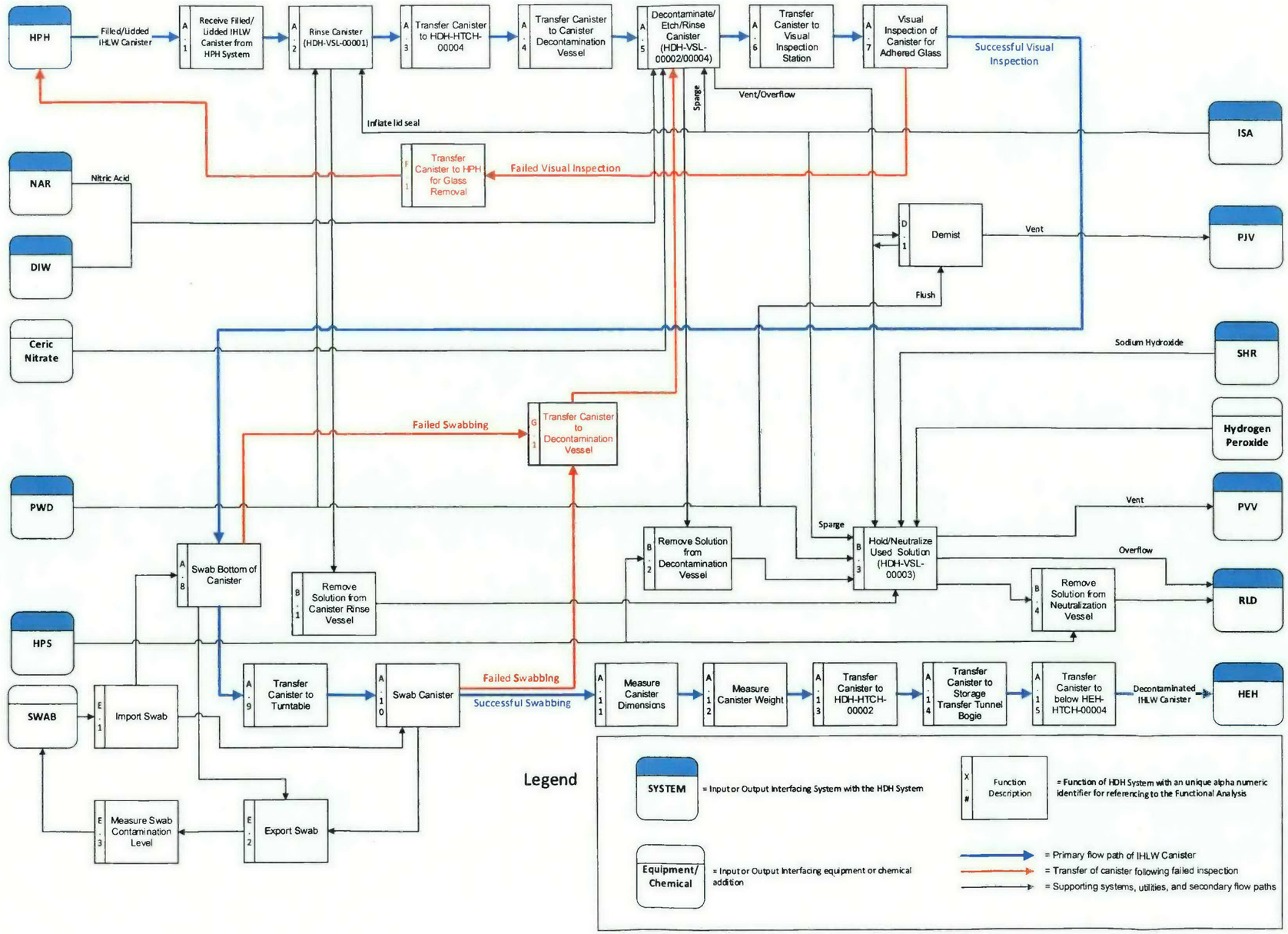

Figure 2-4: HDH System Function Block Diagram

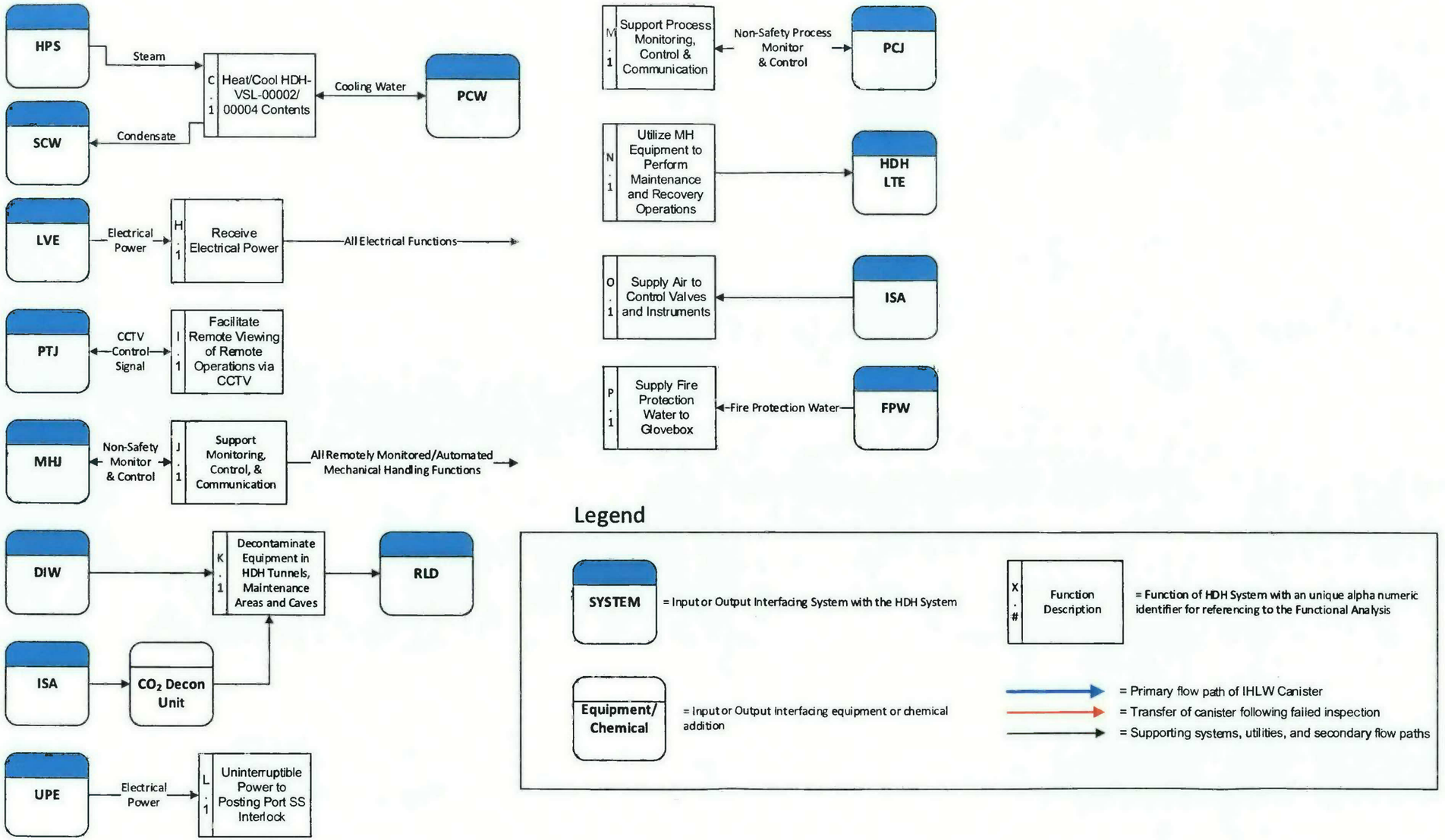

The functions included in Figure 2–4 are the primary and secondary level functions of the HDH system. These functions are further described in Table 2-1. Where appropriate to support definition of functional and design requirements, functions have been further decomposed and additional levels of supporting functions are also described. The requirement section number provides the location of the applicable functional analysis incorporated into system requirements.

Appendix B provides a further decomposition of system functions, including initiating, terminating, and integrating events and functions.

Table 2-1: Functional Analysis and Crosswalk to Requirements

Reference	Functional Analysis Description	Requirement Section No.
A.	**Receive, Rinse, Decontaminate, Swab, and Export the IHLW Canister including all Canister Transfers**	N/A
A.1	Receive Filled/Lidded IHLW Canister from HPH System – The canister rinse vessel bogie receives a filled/lidded canister from the HPH system.	3.4.4.6
A.1.1	The canister rinse vessel bogie moves with the canister to the rinse station. The rinse station includes a spool piece attached to the canister rinse tunnel ceiling with the lid on the bottom of the spool piece.	3.4.4.6
A.2	Rinse Canister (HDH-VSL-00001) – The canister is rinsed using plant wash water from the plant wash and disposal (PWD) system.	3.5.3.8, 3.5.4.3
A.2.1	The lid seal between the canister rinse vessel and fixed spool piece is remotely inflated before rinsing and deflated after rinsing.	3.5.3.13
A.3	Transport canister to HDH-HTCH-00004 – The canister rinse vessel bogie moves with the canister to below HDH-HTCH-00004.	3.4.4.6
A.4	Transfer Canister to Canister Decontamination Vessels – The decontamination crane transfers the canister through HDH-HTCH-00004 and lowers the canister into one of the decontamination vessels.	3.4.4.6
A.5	Decontaminate/Etch/Rinse Canister (HDH-VSL-00002/00004) – ceric nitrate, nitric acid, DIW, and sparge air are supplied to the vessel for decontamination and rinsing.	3.5.3.3, 3.5.3.4, 3.5.3.5, 3.5.1.1, 3.5.4.2
A.5.1	The decontamination vessel lids open and close remotely to allow for canister insertion and removal during decontamination and spraying.	3.11.4.2
A.5.2	The decontamination vessel receives ceric nitrate and nitric acid concurrently.	3.5.3.4, 3.5.3.5
A.5.3	Sparge air is supplied to the vessel to mix the nitric acid and ceric nitrate.	3.5.1.4, 3.5.3.3
A.5.4	The decontamination vessel includes spray rings to spray the canister with nitric acid and DIW after decontamination. The canister is raised through the nitric acid spray and DIW spray.	3.5.4.2
A.6	Transfer Canister to Visual Inspection Station – The decontamination crane transfers the canister from the decontamination vessel to the visual inspection station.	3.4.4.6
A.6.1	Prior to transfer, the decontamination crane detaches the decontamination grapple on a stand and attaches the swabbing and monitoring grapple. Separate grapples are used pre and post decontamination for contamination control.	3.8.2.1

Table 2-1: Functional Analysis and Crosswalk to Requirements

Reference	Functional Analysis Description	Requirement Section No.
A.7	Visual Inspection of Canister – The canister exterior is visually inspected for adhered glass using windows and/or cameras.	3.9.4.1
A.8	Swab Bottom of Canister – The bottom of the canister is swabbed.	3.9.1.2, 3.9.1.3
A.9	Transfer Canister to Turntable – Upon successful visual inspection and acceptable contamination levels on the bottom of the canister, the decontamination crane lowers the canister from the visual inspection station to the swabbing turntable.	3.4.4.6
A.10	Swab Canister – A manipulator swabs the canister.	3.9.1.2, 3.9.1.3
A.10.1	The swabbing turntable is rotated during swabbing.	3.9.1.2, 3.9.1.3
A.11	Measure Canister Dimensions – The canisters dimensions are measured on the swabbing turntable using the telerobotic manipulator.	N/A
A.12	Measure Canister Weight – The canister is lifted from the swabbing turntable and the canister weight is measured using the grapple load cell.	3.8.1.1
A.13	Transport Canister to HDH-HTCH-00002 – The canister is transferred to HDH-HTCH-00002.	3.4.4.6
A.13.1	The canister is lowered through HDH-HTCH-00002.	3.4.4.6
A.14	Transfer Canister to Canister Transfer Tunnel Bogie –The canister is lowered into the canister transfer tunnel bogie.	3.4.4.6
A.15	Transport Canister to below HEH-HTCH-00004 – The canister transfer tunnel bogie moves below HEH-HTCH-00004 and the canister is received by HEH.	3.4.4.6
B.	**Transfer Vessel Effluent to the RLD System**	N/A
B.1	Remove Solution from Canister Rinse Vessel – The canister rinse vessel solution is pumped to the neutralization vessel.	3.5.1.6
B.2	Remove Solution from Decontamination Vessel – The decontamination solution is transferred to the neutralization vessel with steam ejectors after decontamination, after nitric acid spray, and after DIW spray. The steam ejectors interface with high pressure steam (HPS) for the transfer.	3.5.1.6, 3.5.3.2, 3.6.2.4
B.3	Hold/Neutralize Used Solution (HDH-VSL-00003) – The solutions from the canister rinse vessel and decontamination vessels are held in the neutralization vessel. Hydrogen peroxide, sodium hydroxide, and sparge air are supplied to neutralize and mix the solution.	3.5.1.6, 3.5.3.3, 3.5.3.6, 3.5.3.7, 3.5.3.10, 3.6.2.4
B.4	Remove Solution from Neutralization Vessel – The solution is removed from the neutralization vessel and transferred to the RLD system with steam ejectors.	3.5.3.1, 3.5.3.2
C.	**Heating and Cooling of Decontamination Solution**	N/A
C.1	Heat/Cool HDH-VSL-00002/00004 Contents – Steam is used in heat exchangers to heat water which is circulated through the decontamination vessel coils to heat the vessel contents. For cooling, the hot water supply is closed off and the plant cooling water (PCW) system supplies cold water for the coils to cool the vessel contents.	3.5.1.1, 3.5.3.9, 3.6.4.2, 3.5.3.12

Table 2-1: Functional Analysis and Crosswalk to Requirements

Reference	Functional Analysis Description	Requirement Section No.
D.	**Demist**	N/A
D.1	Demist – The overflow piping on the decontamination vessels vents to the pulse jet ventilation (PJV) system. A demister is included to remove moisture from the ventilation gases.	3.5.3.11, 3.12.1.1
E.	**Import/Export Swab and Measure Contamination Levels**	N/A
E.1	Import Swab - A swab is imported through the HDH posting port with the swabbing manipulator.	3.9.1.1
E.2	Export Swab – After the canister is swabbed, the swab is exported into the posting port with a manipulator and is then transferred into the glovebox.	3.9.1.1
E.2.1	The posting port includes a gamma monitor interlock which does not open the out-cave shield door if a high radiation source is present. If the swab's radiation level is greater than allowable, the swab is returned to the decontamination cave and the swabbing manipulator transfers the swab to an in-cave waste basket.	3.11.2.1, 3.11.2.2
E.3	Measure Swab Contamination Levels – The swab is measured for removable contamination levels.	3.9.1.4, 3.9.1.5
F.	**Transfer Canister to HPH (Failed Visual Inspection)**	N/A
F.1	Transfer Canister to HPH – Upon failed visual inspection (i.e., adhered glass), the canister is transferred to HPH.	3.4.4.6, 3.9.4.1
F.1.1	The decontamination crane transfers the canister to above HDH-HTCH-00004.	3.4.4.6
F.1.2	Canister rinse vessel bogie is transferred below HDH-HTCH-00004, the hatch opens, and the canister is lowered into the canister rinse vessel.	3.4.4.6
F.1.3	The canister rinse vessel is transferred to below the canister handling cave export hatch and the HPH system receives the canister.	3.4.4.6
G.	**Transfer Canister to Decontamination Vessel (Failed Contamination Inspection)**	N/A
G.1	Transfer Canister to Decontamination Vessel – Upon failed swabbing, the canister is transferred to a decontamination vessel.	3.4.4.6, 3.9.1.5
G.1.1	The decontamination crane transfers the canister from the swabbing turntable into a decontamination vessel.	3.4.4.6
H.	**Electrical Power**	N/A
H.1	Receive Electrical Power - The low voltage electrical (LVE) (480/208/120 V) system provides electrical power to the HDH equipment and instruments.	N/A

Table 2-1: Functional Analysis and Crosswalk to Requirements

Reference	Functional Analysis Description	Requirement Section No.
I.	**Cameras**	N/A
I.1	Facilitate Remote Viewing of Remote Operations via CCTV – HLW process and mechanical handling CCTV (PTJ) system provides cameras to the canister rinse tunnel, decontamination cave, crane maintenance area, canister rinse vessel bogie maintenance area and canister transfer tunnel. These cameras are accessed via local operator interface (LOI) panels which provide viewing capabilities to aid in maintenance and for viewing of other mechanical handling equipment activities.	3.4.4.9
J.	**Mechanical Handling Monitoring and Control**	N/A
J.1	Support Monitoring, Control, and Communication - The mechanical handling control (MHJ) provides non-safety monitoring and control functions.	N/A
J.1.1	The MHJ monitors and controls movements of mechanical handling equipment to support all canister transfers.	3.4.4.6
J.1.2	The MHJ provides monitoring and control to listed mechanical handling equipment to support canister transfers, access control, and canister swabbing: • Maintenance area shield doors • Hatches (via through wall drives) • Decontamination Crane • Bogies • Decontamination vessel lids (via through wall drives) • Swabbing turntable (via through wall drive) • Swabbing manipulator (via through wall drive) • Swabbing vertical elevator (via through wall drive)	3.11.4.2
J.1.3	The MHJ provides monitoring and control to the following equipment recovery devices: • Canister rinse bogie • Decontamination crane • Canister transfer tunnel bogie	3.5.4.4, 3.7.1.4
J.1.4	The HDH provides non-safety interlocks for the following functions: • Provide door and hatch sequence interlocks to prevent unbalanced ventilation • Prevent damage to HDH Equipment • Support canister transfers • Supply defense in depth measures for contamination and radiation control	3.11.2.2, 3.11.4.3.2, 3.11.4.3.3, 3.11.4.3.4, 3.11.4.3.5, 3.11.4.3.6, 3.11.4.3.7
K.	**Decontaminate Equipment**	N/A
K.1	Decontaminate Equipment in HDH tunnels, Maintenance Areas, and Caves – DIW and a CO_2 decontamination unit are used to decontaminate the HDH equipment. The ISA system is supplied to the CO_2 decontamination unit. Rinsate is collected in floor sumps and transferred to the RLD system.	3.4.4.7
L.	**Uninterruptible Power Supply**	N/A

Table 2-1: Functional Analysis and Crosswalk to Requirements

Reference	Functional Analysis Description	Requirement Section No.
L.1	Uninterruptible Power to Posting Port Safety Significant Interlocks – The posting port interlocks are safety significant and have a connection to the uninterruptible power supply.	N/A
M.	**Process Monitoring, Control, and Communication Functions**	N/A
M.1	Support Process Monitoring, Control, and Communications - The process control (PCJ) system provides non-safety monitoring and control functions.	N/A
M.1.1	The PCJ monitors the temperature of the decontamination vessel and neutralization vessel contents.	3.5.1.1, 3.11.1.1.1, 3.11.4.1
M.1.2	The PCJ monitors the level of all the HDH vessel contents.	3.11.1.1.3, 3.11.4.1
M.1.3	The PCJ monitors the pressure of the decontamination vessels and neutralization vessel.	3.11.1.1.2, 3.11.4.1
M.1.4	The PCJ controls and monitors the pressure in the inflatable seal of the canister rinse vessel.	3.11.4.1, 3.5.3.13
M.1.5	The PCJ controls the operation of the transfer pump from the canister rinse vessel to the neutralization vessel.	3.11.4.1, 3.5.1.6
M.1.6	The PCJ controls the operation of the steam supply valves to activate the steam ejectors to transfer effluent from the decontamination vessels to the neutralization vessel and from the neutralization vessel to the RLD system.	3.11.4.1, 3.5.3.1, 3.5.3.2
M.1.7	The PCJ controls and monitors the flow rate of PCW/heating water through the decontamination vessel coils.	3.5.3.9, 3.6.4.2, 3.11.4.1
M.1.8	The PCJ controls the operation of heat exchangers, steam supply to heat exchangers, and associated pumps to control the flow rate of heating water supplied to the decontamination vessels.	3.5.3.12, 3.6.4.2, 3.11.1.1.1, 3.11.4.1
M.1.9	The PCJ controls and monitors the flow rate of air flowing through the sparger air supply lines.	3.5.3.3, 3.11.1.1.4, 3.11.4.1
M.1.10	The PCJ controls and monitors the supply of PWD for rinsing in the canister rinse vessel and neutralization vessel.	3.5.3.8, 3.11.4.1
M.1.11	The PCJ controls and monitors the supply of nitric acid for spray in the decontamination vessel.	3.5.3.5, 3.5.4.2, 3.11.4.1
M.1.12	The PCJ controls and monitors the supply of DIW for spray in the decontamination vessel.	3.11.4.1, 3.5.4.2, 3.5.3.5
N.	**Maintenance and Recovery Operations**	N/A
N.1	Use Mechanical Handling Equipment to Perform Maintenance and Recovery Operations.	3.8.4.1, 3.11.4.2
N.1.1	The decontamination crane has the capability to replace/remove the in-cave master-slave manipulators (MSM) slave arms, hatches, and wall mounted lights.	3.4.4.1
N.1.2	Normal operations and recovery systems provide the capability to transfer the canister rinse vessel bogie to the maintenance area.	3.5.4.4

Table 2-1: Functional Analysis and Crosswalk to Requirements

Reference	Functional Analysis Description	Requirement Section No.
N.1.2.1	The utility hoses are disconnected from the canister rinse vessel before the vessel enters the maintenance area.	3.5.2.6
N.1.2.2	The power supply to the canister rinse vessel bogie is disconnected in the canister rinse tunnel and a separate power supply from the maintenance area is connected for movement into the maintenance area.	3.5.2.7
N.1.2.3	A stainless steel lid is placed on the canister rinse vessel as soon as the vessel enters the maintenance area.	3.5.2.8
N.1.3	Recovery systems provide the capability to recover the canister transfer tunnel bogie.	3.5.4.4
N.1.4	Recovery systems provide the capability to recover the decontamination crane to the maintenance area.	3.7.1.4
N.1.5	Drives for hatches and decontamination vessel lids provide the capability to be manually operated from outside the cell in the event of motor failure.	3.10.4.2
N.1.6	Shield doors include recovery systems to recover maintenance area shield doors to the closed position.	3.10.4.3
N.1.7	Recovery systems provide capability to recover canisters in the event of a canister drop.	3.12.1.2
O.	**Supply Air to Control Valves and Instruments**	N/A
O.1	Supply Air to Control Valves and Instruments. Air is used to supply the motive force to open/operate control valves and instruments.	3.12.1.3
P.	**Supply Fire Protection Water to Glovebox**	N/A
P.1	Supply Fire Protection Water to Glovebox. Fire protection water provides fire water to sprinklers in the glovebox.	3.9.4.8

2.2 System Classification

The HDH system contains components with the following classifications/designations:

- ☒ Safety Class
- ☒ Safety Significant
- ☒ Dangerous Waste Permit affecting
- ☐ Air Permit affecting
- ☒ Waste Acceptance Impacting
- ☒ General

2.3 Basic Operational Overview

A functional description of the system is provided in Sections 2 and 2.1, which provide the context diagram for the system, interfaces with other systems, a simplified system diagram, a functional block diagram, and

descriptions of the system functions. A basic operational system overview is described in this section. Detailed operational information is provided in Section 4.

The HDH system is located in the HLW Facility of the Hanford Tank Waste Treatment and Immobilization Plant (WTP). The HDH receives a filled and lidded IHLW canister from the HPH. The HDH system rinses the canister with water and transfers the canister to the HDH decontamination vessels. The canister undergoes a chemical etching/decontamination process using ceric nitrate and nitric acid. The canister is rinsed in the decontamination vessel before transfer for visual inspection for adhered glass and swabbing to measure removable contamination levels. Upon successful visual inspection and swabbing inspections, the canister is transferred to the HEH. The HDH includes cranes, bogies, grapples, shield doors, shield hatches, vessels, pumps, heat exchangers, manipulators, vessels, and other equipment used in the decontamination process.

3 Design Requirements

3.1 Requirements

Requirements are documented in Section 3.4 through Section 3.12. Each requirement statement is accompanied by a basis discussion (as needed) and the expected means of verification. Requirements must be met in design. If a requirement stated in this document cannot be met in design, a revision to the requirement needs to be pursued, if possible, or the design must be changed to meet the requirement.

Requirements preceded by "**[HOLD]**" may only be used in support of preliminary or committed design, which shall also be issued with appropriate holds per procedure 24590-WTP-3DP-G04B-00046, *Engineering Drawings*. These requirements may not be used in support of fabrication or construction.

The following abbreviations are used to designate the selected method for verification (refer to 24590-WTP-GPG-ENG-0161, *Technical Requirements Management*, for additional guidance concerning methods of verification):

(I) Inspection
(A) Analysis
(D) Demonstration
(T) Test

The following abbreviations are used to designate the organization responsible for performing the verification:

(ENG) Engineering
(CON) Construction
(SU) Startup
(COM) Commissioning
(SUP) Supplier
(SUB) Subcontractor
(SQR) Supplier Quality Representative
(REC) Receiving

3.2 Bases

Basis discussions are provided as needed to explain the decomposition or interpretation from the originating source requirement(s). Where a [**HOLD**] has been applied to a requirement, this section will include the basis for the "HOLD." Where included, basis discussions provide supplementary information to help the reader understand the origin or intent of a requirement. Basis statements do not include requirements and are not to be considered as requirements.

3.3 References

The requirements include a source document reference and a requirement object identification number (ROIN) included in brackets following the requirement statement. Each unique source document reference, with ROIN number(s), is bracketed separately. Requirements may include a reference to the Section 2.1, Functional Description, which are listed in parentheses following the source document and ROIN number references. A complete listing of all source references is provided in Section 5.1.

3.4 General Requirements

3.4.1 Mission and Functional / Performance Requirements (Including States/Modes)

3.4.1.1 HDH System Production Rates

Requirement: The HDH system shall support a production rate of 7.5 metric tons of glass (MTG) per day. [Sections 6.1.3, 6.3, 6.3.3, 6.11.1, BOD, ROIN: 40-19792, ROIN: 43-1328, ROIN: 1-40498, ROIN: 43-1354, ROIN: 43-1426, ROIN: 43-1440][Table C.7-1.1, C.7(b)(3), C.7(c)(9), C.7(c)(10), WTP Contract, ROIN: 43-663, ROIN: 1-25956, ROIN: 43-661, ROIN: 40-16063](N.1.1)

Basis Discussion: Each canister contains 3 MTG (Section 6.3.3, BOD) which leads to a throughput capacity of 2.5 canisters per day at 100% availability.

Verification: Verification is expected to be achieved through:

Verif. Method	Verif. By	Plan	Notes/Comments
A	ENG	Perform an analysis to verify the processing rate for the HDH system.	
I	ENG	Review of design to verify conformance to throughput requirement.	

3.4.1.2 Design Life

3.4.1.2.1 Service (Operating) Life

Requirement: Except as noted in the table below, non-replaceable, permanent HDH plant equipment shall be designed for a minimum design life of 40 years, inclusive of maintenance. All non-maintainable items of HDH equipment shall be designed to last the life of the facility (40 years). Design life of in-cell/in-cave equipment shall consider the effects of chemical, radiological and thermal exposure. [Section C.7(a)(1), WTP Contract, ROIN: 1-25930][Sections 11.1.1, 11.4.1, 11.7.4, 11.8.3, BOD, ROIN: 1-41154, ROIN: 1-41120, ROIN: 1-41121B,

ROIN: 1-41210, ROIN: 1-41214][Sections 2, 14.1, Appendix A, ORD, ROIN: 8-3584, ROIN: 1-39819, ROIN: 2-49671]

Table 3-1: HDH Equipment and Components Design Life

Equipment/Component Description	Design Life (Years)
Transfer Pumps	>5* (Target design life is 20)
Inline components (valves, instruments)	Target design life > 5*

*Equipment for which premature failure or need for replacement could lead to shutdown of the melter system shall be designed for a minimum service life of 5 years to allow for replacement during melter outages.

Basis Discussion: Equipment and material selection is based on proven performance, value engineering principles, and fit-for-function principles. The selection of equipment and materials is further addressed in detail as the design progresses. In-cell/in-cave equipment design considers the routine environmental exposures under normal operations for non-safety equipment; safety and PAM equipment also considers abnormal and emergency exposures – this minimizes the need for equipment maintenance, exposure and radiological waste generation in radiological areas.
[ALARA]

Verification: Verification is expected to be achieved through:

Verif. Method	Verif. By	Plan	Notes/Comments
I	ENG	The "qualified" design life for safety and PAM SSCs is to be verified through review of equipment design as documented in equipment qualification packages.	Design life for safety and PAM equipment to be documented in EQPs and supplier certificates of conformance.
I	ENG	Review design to verify design life of non-safety, non-replaceable, non-maintainable SSCs is documented in procurement documents and supported by supplier certificates of conformance.	Document in an evaluation/assessment.

3.4.1.2.2 Materials of Construction and Erosion/Corrosion Design Parameters

Requirement: The HDH system shall be designed to include adequate allowance for erosion/corrosion and use materials of construction, in accordance with: [Appendix H, Section 5, SRD, ROIN: 8-6462]

Basis discussion: The allowance for erosion/corrosion and applicable materials of construction are limited to those components that come into contact with the process fluids and that are required to maintain confinement/ containment of those process fluids. Materials of construction that can withstand the erosive/ corrosive low-activity waste effluents and chemicals are selected. The materials for the HLW Facility HDH system equipment and components are selected based on the stream data presented in the process corrosion data sheet report. If flushing or washing via internal spray mechanisms is needed to prevent or minimize corrosion, the operational limitations are identified in the corrosion evaluation. Refer to Appendix B, Tables B-1 to B-3; 24590-WTP-DB-PET-09-001, *Process Inputs Basis of Design* (PIBOD); and 24590-WTP-M4C-V11T-00024, *WTP Process Flowsheet Mass & Energy Balance Analysis for Input to Material Selection Assessments,* for the fluid characteristics of the process streams.

Verification: Verification is expected to be achieved through:

Verif. Method	Verif. By	Plan	Notes/Comments
A/I	ENG	Perform an analysis/inspection of materials used in the HLW Facility HDH system which are in contact with, and are required to maintain confinement or containment of, the process fluids to verify that they are acceptable for use in the operating environment and have adequate erosion and corrosion allowances.	Details of the allowed materials and corrosion allowances can be found in: • 24590-HLW-N1D-HDH-00003, *HDH-VSL-00002 & HDH-VSL-00004 (HLW) - Corrosion Evaluation Data Sheet* • 24590-HLW-N1D-HDH-00005, *HDH-VSL-00003 (HLW) - Waste Neutralization Vessel* • 24590-HLW-N1D-HDH-00007, *HDH-VSL-00001 (HLW) - Rinse Tunnel Canister Rinse Vessel* • 24590-HLW-N1D-HDH-00009, *HDH-TK-00002 (HLW) - Cerium IV Addition Tank*
I	ENG	Review design components used in the HLW Facility HDH system which are in contact with, and are required to maintain confinement or containment of, the process fluids for concurrence with analysis.	

3.4.1.2.3 Room Environment Conditions for Safety SSCs

Requirement: The Safety equipment in the HLW HDH credited with a safety function shall be designed to operate and withstand the most severe environmental conditions identified for the room in which they are installed, inclusive of aging effects, throughout their qualified life. [Safety Criterion 4.4-1, SRD, ROIN: 1-38690][Section 11.7.3, BOD, ROIN: 8-13210, ROIN: 8-13212]

Basis discussion: Safety SSCs designated as SC and SS are designed and qualified to perform their safety function as intended in the room environment conditions associated with the events for which they are intended to respond. The effects of aging on normal and abnormal functioning are considered in design and qualification. HLW Room Environment Data Sheet (24590-HLW-U0D-W16T-00001) identifies environmental conditions for rooms that house safety SSCs.

Verification: Verification is expected to be achieved through:

Verif. Method	Verif. By	Plan	Notes/Comments
A/T	ENG	Perform analysis or testing to verify the ability of the SSCs credited with a safety function to withstand the specified environmental conditions.	Document in EQP. See HLW Room Environment Data Sheet (24590-HLW-U0D-W16T-00001) for room environmental conditions.
I	ENG	Review the design to verify conformance to the as-tested or as-analyzed configuration.	Document in an evaluation/assessment or EQP.

3.4.1.2.4 Room Environment Conditions for Non-Safety SSCs

Requirement: Non-safety equipment/components shall be designed to operate and withstand the service conditions per Table 12-1 in the BOD. [Table 12-1, BOD, ROIN: 2-39190][Sections 11.16, 16.1, ORD, ROIN: 14-1248E, ROIN: 8-7000]

Basis discussion: Non-safety SSCs are designed to function as intended in the room environment conditions associated with their location.

Verification: Verification is expected to be achieved through:

Verif. Method	Verif. By	Plan	Notes/Comments
I	ENG	Review of design of non-safety, active SSCs to ensure compliance with BOD Table 12-1 conditions for rooms in which they are installed.	Document in an evaluation/assessment.

3.4.1.2.5 Seismic Design

Requirement: [**HOLD**] Elements of the HDH system shall be designed for seismic conditions in accordance with Table 3-2. [Sections 3.3.6.1.7.1, 4.3.1, 4.3.1.2, 4.3.9.2, 4.3.19.2, 4.4.1.2, 4.4.26.2, PDSA – HLW Facility, ROIN: 40-2752, ROIN: 40-2753, ROIN: 40-2754, ROIN: 40-2703, ROIN: 40-2704, ROIN: 40-2705, ROIN: 40-2706, ROIN: 40-2707, ROIN: 40-2708, ROIN: 1-21507, ROIN: 1-21509, ROIN: 40-21397, ROIN: 45-31388, ROIN: 40-40285, ROIN: 45-32107][Section 16.2.4.1, BOD, ROIN: 43-511][Safety Criterion 4.1, SRD, ROIN: 1-38653]

Table 3-2: HDH System Seismic Design Categories

Description	Seismic Category	Reference
SPADs (HDH-DOOR-00003, -00004, -00005, -00006)	SC-I	Section 4.3.9.2, PDSA – HLW Facility, ROIN: 40-2705, ROIN: 40-2706, ROIN: 40-2707, ROIN: 40-2708

Table 3-2: HDH System Seismic Design Categories

Description	Seismic Category	Reference
HDH Out Cave Steam Piping and Valves (diameter > 1")	**SC-I**	Sections 3.3.6.1.7.1, 4.3.19.2, PDSA – HLW Facility, ROIN: 40-40285, ROIN: 45-31388
* Through Wall Equipment • Through Wall Drives (HDH-DRIV-00001, -00002, -00003, -00004, -00005, -00007, -00008) • MSMs (HDH-MANIP-00002, -00003, -00004) • Plugs (HDH-PLUG-00001) • Through Wall Devices (HDH-TWDVC-00002, -00008) • Bridge beam for HDH-DOOR-00002	**SC-I**	Sections 4.3.1, 4.3.1.2, PDSA - HLW Facility, ROIN: 1-21507, ROIN: 1-21509
HDH Decontamination crane (HDH-CRN-00005)	**SC-II [HOLD]**	--
Shield Doors (HDH-DOOR-00001, -00002)	**SC-II**	Section 4.4.1.2, PDSA – HLW Facility, ROIN: 40-2703, ROIN: 40-2704
Shield Hatches (HDH-HTCH-00002, -00003, -00004)	**SC-II**	Section 4.4.1.2, PDSA - HLW Facility, ROIN: 40-2752, ROIN: 40-2753, ROIN: 40-2754
** Positional/Proximity Interlocks (on posting port)	**SC-III**	Section 4.4.22.4, PDSA – HLW Facility, ROIN: 45-32044, ROIN: 45-32045

* For items in penetrations through the C5V boundary, the attribute(s) of the component necessary to keep the item in the penetration and to ensure the body of the item does not fail are SC-I. (Section 4.3.1.2, PDSA – HLW Facility).

** Interlocks consist of sensors, logic solvers, relays, and associated wiring and equipment.

Basis Discussion: Section 2.4.12 of 24590-WTP-PSAR-ESH-01-002-01, *Preliminary Documented Safety Analysis to Support Construction Authorization; General Information* (PDSA – General) states: "All components and parts of the equipment that provide or contribute to the safety functions and accident monitoring functions, including equipment supports and anchorage, shall be qualified accordingly." This qualification ensures SSCs meet the designated seismic design requirements. The SRD (24590-WTP-SRD-ESH-01-001-02) Safety Criterion 4.1-3 details the equivalence of the WTP seismic category (SC) to the seismic performance category of DOE-STD-1020-94, *Natural Phenomena Hazards Design and Evaluation Criteria for Department of Energy Facilities*. The SRD also states that SSCs designated as safety SSCs be designed to withstand the effects of natural phenomena hazard (NPH) events (e.g., earthquakes, wind, and floods) without loss of capability to perform specified safety functions.

HDH out cave steam piping is located in room H-0417. This room requires steam piping > 1" diameter to be designed to SC-I with SS steam isolation interlocks per Sections 3.3.6.7.1 and 4.3.19.2 of the PDSA – HLW Facility (the SS steam isolation interlocks are part of the HPS system).

The seismic category for the decontamination cave crane (HDH-CRN-00005) is on "HOLD" due to differences between the HLW PDSA and calculation 24590-HLW-S0C-S15T-00028 referenced within the PDSA. As documented in 24590-WTP-GCA-MGT-15-00230, 24590-HLW-S0C-S15T-00028 is cited in PDSA section 3.4.2.1.1.5 as confirming no seismic controls are required for heavy load drops. In actuality, the calculation does not evaluate or confirm margin against floor perforation due to crane drops, but cites SC-II crane design as justification for not evaluating crane drops. Resolution of the difference between the PDSA and 24590-HLW-S0C-S15T-00028 is being tracked by CR 24590-WTP-GCA-MGT-15-00230.
[ATS 15-0111]

Verification: Verification is expected to be achieved through:

Verif. Method	Verif. By	Plan	Notes/Comments
A/T	ENG/ SUP	Analysis or testing performed on safety SSCs to demonstrate capability to withstand seismic event.	This is expected to be documented in the EQPs. EQPs will be prepared for all safety components. Refer to the latest revision of 24590-WTP-PD-ENG-0001, *Equipment Qualification,* Program Description for additional information, including independent peer review of seismic evaluation of the applicable SSCs (WTP and supplier-supplied) in accordance with requirements of DOE-STD-1020-94, *Natural Phenomena Hazards Design and Evaluation Criteria for Department of Energy Facilities.*
I	ENG	Review of design of safety SSCs to ensure conformance to the results of the analysis or testing.	May be accomplished by EQP or separate evaluation/assessment.

3.4.1.3 Seismic Design for Interaction Effects

Requirement: All permanently mounted HDH equipment not specified in Table 3-2 shall, at minimum, be designated Seismic Category-IV. Interaction effects shall be considered when determining the seismic category of individual items and, where an adverse seismic interaction with SC or SS equipment exists, adequate measures shall be taken to preclude the adverse interaction. [Safety Criterion 4.1-3, SRD, ROIN: 1-38653][Sections D.7,

D.7.1, D.7.8, 10.2.15, BOD, ROIN: 45-21847, ROIN: 21848, ROIN: 45-21901, ROIN: 45-21913, ROIN: 45-21927]

Basis Discussion: In accordance with 24590-WTP-GPG-ENG-033, *Evaluation for Seismic Interaction Effects,* equipment that is non-safety may be identified as having a potential for adverse interaction with safety equipment during a seismic event. Where a resolution strategy is selected to increase the seismic category of the source SSC to protect the safety (target) SSC, the resulting seismic category of the equipment may be greater than SC-IV. In those cases, the equipment design is verified to meet the higher seismic performance category such that the target SSC is protected.

Verification: Verification is expected to be achieved through:

Verif. Method	Verif. By	Plan	Notes/Comments
I	ENG	Evaluate the HDH system for seismic interaction effects per 24590-WTP-GPG-ENG-033 and devise a control strategy for all open interactions.	Document in a Seismic Interaction List.
A/T	ENG/SUP	Analysis or testing performed on SSCs to demonstrate the ability to withstand the seismic loadings for their respective seismic categories to the extent necessary to prevent interactions.	Documented in an Equipment Seismic Qualification (ESQ) Review Form or supplier seismic design report.
I	ENG	Review design to verify conformance to the as-tested/as-analyzed configuration.	

3.4.1.4 Decontamination Process

Requirement: The system shall implement process controls to ensure that canister wall thickness reduction is < 10 μm per decontamination cycle and has no significant effect on canister integrity. The effects of time and number of decontamination cycles shall be investigated. [Section 4.3, IHLW Waste Form Compliance Plan, ROIN: 2-20344, ROIN: 40-23102][Section 1.1.2.10, *WTP HLW Canister Processing Activities*, ROIN: 40-23677][Appendix A (line 191), (line 196), WAI Items and Activities, ROIN: 45-1826, ROIN: 45-1833]

Basis Discussion: Variables that may be controlled for this purpose include the ceric nitrate concentration (determines the extent of the decontamination reaction) and the number of decontamination cycles for each canister. Canister wall thickness reduction is determined from coupon tests. The minimum canister wall thickness of the filled, decontaminated canister is estimated by subtracting the amount of material removed during the decontamination process from the measure wall thickness of the unfilled canister. Using the estimated minimum wall thickness for a filled and decontaminated canister, engineering calculations are performed to show that there is no significant impact on canister integrity as a result of the decontamination process (Appendix A (line 191), WAI Items and Activities).

Verification: Verification is expected to be achieved through:

Verif. Method	Verif. By	Plan	Notes/Comments
T	ENG	Perform testing on canister (or coupons of same material) to determine the effects of the decontamination variables (e.g., ceric nitrate concentration, time, and number of cycles) on the process.	This testing is WAI.
A	ENG	Perform an analysis from testing results to verify the decontamination process has no significant impact on canister integrity.	This analysis is WAI.
I	ENG	Review of design to verify conformance to parameters established in the test conclusions.	

3.4.2 Nuclear Safety, ALARA, Environmental, and Other Regulatory Requirements

3.4.2.1 Safety Designations

Requirement: The following SSCs shall be designated as safety SSCs in accordance with Table 3-3: [Safety Criterion 4.1-2, 4.1-3, 4.4-1, SRD, ROIN: 1-38650, ROIN: 1-38653, ROIN: 1-38690][Sections 3.3.6.1.7, 3.3.6.1.7.1, 4.3.9, 4.3.9.2, 4.4.1.2, 4.4.22.2, 4.4.26.2, PDSA – HLW Facility, ROIN: 40-2705, ROIN: 40-2706, ROIN: 40-2707, ROIN: 40-2708, ROIN: 40-2703, ROIN: 40-2704, ROIN: 40-2752, ROIN: 40-2753, ROIN: 40-2754, ROIN: 45-32019, ROIN: 40-40284, ROIN: 40-40285, ROIN: 45-32107, ROIN: 2-41302][Section 4.1.3, PFHA- HLW Facility, ROIN: 40-28301, ROIN: 40-28302]

Note: Safety instruments are addressed separately in Appendix C.

Table 3-3: HDH System Safety Design Categories

Equipment/ Component Description	Safety Function	Safety Classification	References
Maintenance Area Shield Doors HDH-DOOR-00001 and -00002	Provide shielding and provide an engineered air gap.	SS	Section 4.4.1, PDSA – HLW Facility
SPADs HDH-DOOR-00003, -00004, -00005, -00006	Mitigates the consequences of an airborne release to the public and/or co-located workers by providing a high-integrity confinement boundary evaluated for design basis accident (seismic and fire) conditions (SC). Provide shielding (SS function).	SC SS	Sections 4.3.4, 4.3.9, 4.4.1, PDSA – HLW Facility

Equipment/ Component Description	Safety Function	Safety Classification	References
* Through Wall Drives (HDH-DRIV-00001, -00002, -00003, -00004, -00005, -00007, and -00008)	Mitigates the consequences of an airborne release to the public and/or co-located workers by providing a high-integrity confinement boundary evaluated for design basis accident (seismic and fire) conditions (SC). Provide shielding (SS function).	SC SS	Sections 4.3.4, 4.3.9, 4.4.1, PDSA - HLW Facility
* MSMs (HDH-MANIP-00002, -00003, -00004)	Mitigates the consequences of an airborne release to the public and/or co-located workers by providing a high-integrity confinement boundary evaluated for design basis accident (seismic and fire) conditions (SC). Provide shielding (SS function).	SC SS	Sections 4.3.4, 4.3.9, 4.4.1, PDSA - HLW Facility
* Plugs (HDH-PLUG-00001)	Mitigates the consequences of an airborne release to the public and/or co-located workers by providing a high-integrity confinement boundary evaluated for design basis accident (seismic and fire) conditions (SC). Provide shielding (SS function).	SC SS	Sections 4.3.4, 4.3.9, 4.4.1, PDSA - HLW Facility
* Through Wall Devices (HDH-TWDVC-00002 and -00008)	Mitigates the consequences of an airborne release to the public and/or co-located workers by providing a high-integrity confinement boundary evaluated for design basis accident (seismic and fire) conditions (SC). Provide shielding (SS function).	SC SS	Sections 4.3.4, 4.3.9, 4.4.1, PDSA - HLW Facility
* Bridge Beam for HDH-DOOR-00002	Mitigates the consequences of an airborne release to the public and/or co-located workers by providing a high-integrity confinement boundary evaluated for design basis accident (seismic and fire) conditions (SC).	SC	HLW PDSA Section 4.3.4
Hatches HDH-HTCH-00002, -00003, -00004	Provide shielding, provide an engineered air gap.	SS	Section 4.4.1, PDSA – HLW Facility
HDH Posting Port Interlock	Prevents a direct shine path through the posting port.	SS	Section 4.4.22.2, PDSA – HLW Facility

Equipment/ Component Description	Safety Function	Safety Classification	References
Shield Doors and SPADs HDH-DOOR-00001, -00002, -00003, -00004, -00005, -00006, HDH-HTCH-00002, -00003, -00004	Prevents inadvertent opening of hatches in canister rinse tunnel with personnel present and prevents unauthorized or inadvertent entry when a high radiation source is present.	SS	Sections 4.3.9.1 PDSA – HLW Facility
HDH Out Cave Steam Piping and Valves (diameter > 1")	Prevents degradation of the function of vital equipment due to steam leaks.	SC	Sections 3.3.6.1.7, 3.3.6.1.7.1, 4.4.26.2, PDSA – HLW Facility

* For items that penetrate the C5V boundary, the attribute(s) of the component necessary to keep the item in the penetration and to ensure the body of the item does not fail are SC (Section 4.3.1.2, PDSA – HLW Facility).

Basis Discussion: To ensure safety SSCs meet the design functions, Safety Criterion 4.4-1 of the SRD states: "Safety structures, systems, and components designated as safety class and safety significant are designed and qualified to function as intended in the environments associated with the events for which they are intended to respond. The effects of aging on normal and abnormal functioning are considered in design and qualification."

HDH out cave steam piping is located in room H-0417. This room requires steam piping > 1" diameter to be SC with SS steam isolation interlocks per Sections 3.3.6.7.1 and 4.3.19.2 of the PDSA – HLW Facility (the SS steam isolation interlocks are part of the HPS system).
[ALARA]

Verification: Verification is expected to be achieved through:

Verif. Method	Verif. By	Plan	Notes/Comments
I	ENG	Verify that the safety classification(s) and function(s), as established in the PDSA/DSA are correctly reflected in the Equipment Qualification Datasheet (EQD) in supporting documentation in the EQP and, when applicable, in the Safety System REquiremetns Specification (SSRS).	May be accomplished by EQP and/or DVR.

3.4.2.2 Maintainable Equipment Location

Requirement: The maintainable HDH equipment and components listed below shall be located in an area where contact maintenance is possible. [Section 7.1, ORD, ROIN: 9-58][Sections 11.4.1, 11.8.3.1, BOD, ROIN: 1-41149, ROIN: 2-43161, ROIN: 2-43165]

- Crane cable reel (HDH-CRN-00005)
- Motors for hatches (HDH-HTCH-00002, -00003, and -00004)
- Motors for decontamination vessel lids (lids for HDH-VSL-00002 and -00004)
- Motors for shield doors (HDH-DOOR-00001 and -00002)
- Motor for canister swabbing arm (HDH-MANIP-00001)
- Motor for swabbing turntable (HDH-TTBL-00001)

- Motor for vertical rail assembly (HDH-MHAN-00018)
- MSM Master Arms (HDH-MANIP-00002, -00003, and -00004)
- Motor for canister transfer tunnel bogie recovery (HDH-RCVY-00007)
- Canister rinse tunnel bogie recovery (HDH-RCVY-00009)
- Decontamination crane recovery (HDH-RCVY-00004)
- HDH Glovebox (HDH-MHAN-00001)

Basis Discussion: Components of equipment that require a high degree of maintenance or service are located in an area where personnel have access for hands-on maintenance activities. Crane cable reels are located in the crane maintenance areas as discussed in ADR 24590-HLW-ADR-M-02-002, *HLW System HDH/HEH Multidiscipline Design Review*. Equipment that penetrates the C5V boundary maintains the C5V boundary. Reference requirements 3.4.1.2.5 and 3.4.2.1.
[ALARA]

Verification: Verification is expected to be achieved through:

Verif. Method	Verif. By	Plan	Notes/Comments
I	ENG	Review of design to verify that maintainable equipment is located where contact maintenance is possible.	

3.4.2.3 Equipment Decontamination

Requirement: The HDH equipment located inside the canister rinse tunnel, decontamination cave, canister transfer tunnel, and maintenance areas shall be designed to withstand decontamination without any reduction of functionality through degradation of the electrical, mechanical, or any other components involved. [Sections 9.1, 14.16, 20.0, ORD, ROIN: 8-8065, ROIN: 8-475, ROIN: 9-56][Section 11.8.3.1, BOD, ROIN: 1-41215, ROIN: 2-43152]

Basis Discussion: The HDH equipment operating in a contaminated environment is able to withstand decontamination without reduction of functionality to support manned entry into these areas. Sealed bearings and motors are used on cranes to prevent degradation.
[ALARA]

Verification: Verification is expected to be achieved through:

Verif. Method	Verif. By	Plan	Notes/Comments
I	ENG	Review the HDH design to verify equipment in contaminated areas can withstand decontamination without degradation or reduction in equipment functionality.	Document in an evaluation/assessment. Ops and Radiological Engineering to participate in or review evaluation/assessment.

3.4.3 System Interface Requirements

Requirements associated with specific system interfaces are discussed in the subsequent requirement sections titled "System Interface Requirements." System interfaces are further described in section 4.1.2.

3.4.4 Other Technical, Specialty, Operations and Maintenance Requirements

3.4.4.1 Remote Equipment/Component Maintenance and Replacement

Requirement: The HDH maintainable or replaceable equipment and components listed in Table 3-4 shall be designed with remote handling features to be removed from the decontamination cave and transferred to the CMA. [Sections 5.2, 6.2, 8.1.3, 9.1, 9.2, 14.1, 20.0, ORD, ROIN: 1-39930, ROIN: 8-2771, ROIN: 8-4350, ROIN: 8-3584, ROIN: 1-39963, ROIN: 8-4687, ROIN: 8-9095A, ROIN: 8-9095B][Sections 9.4.2, 11.3.2, 11.3.2.2, 11.4.1, 11.5.1, 11.8.3.1, BOD, ROIN: 1-40909, ROIN: 8-3756, ROIN: 1-40913, ROIN: 1-41132, ROIN: 1-41133, ROIN: 1-41134, ROIN: 1-41136, ROIN: 1-41148, ROIN: 1-41153, ROIN: 1-41215, ROIN: 1-41151](N.1.1)

Table 3-4: Remotely Replaceable/Maintainable Equipment/Components

Equipment/Component Description	Remote Removal and Replacement
Hatches (HDH-HTCH-00002, -00003, -00004)	Yes
MSMs (Slave Arms) (HDH-MANIP-00002, -00003, -00004)	Yes
Wall mounted lights (system LTE)	Yes

Basis Discussion: Manned entry is the primary method for maintenance of the HDH equipment; however, some in-cave equipment disassembly, removal to maintenance area, and/or replacement is accomplished by local remote handling equipment or by remote handling equipment in dedicated maintenance areas or caves. In general, process systems and equipment within cells or caves that could fail during operations are designed for safe recovery, replacement, or redundancy. Remote handling features help to facilitate interfacing with equipment or components when using remote handling equipment (e.g., by in-cave cranes, power manipulators, or MSMs). In the event of hatch failure, the hatch is fitted with a lifting bail that enables the decontamination crane to lift the hatch and transfer it to the maintenance area. The canister handling cave export hatch (HDH-HTCH-00003) is transferred to a maintenance area using a HPH crane. MSMs are transferred to the CMA using the decontamination crane and a specialized tool.
[ALARA]

Verification: Verification is expected to be achieved through:

Verif. Method	Verif. By	Plan	Notes/Comments
I	ENG	Review design to verify all remotely replaceable components are remotable.	Document in an evaluation/assessment. Recommend using a software program such as "IGrip" (or similar).
D	SU/COM	Demonstrate remotability in accordance with 24590-WTP-PL-RACT-RT-0001, *WTP Remotability Verification Plan.*	Physical demonstration

3.4.4.2 MSM Removal

Requirement: The HDH MSMs master arm and through wall assembly shall be designed for removal through the cell wall to a removal cart or monorail in the operating gallery. [Section 9.2, ORD, ROIN: 8-9095B]

Basis Discussion: The out cave and through wall portions of the MSM are removed onto a specialized cart or monorail located in the operating gallery. The slave arm is transferred to the CMA using the decontamination crane (reference requirement 3.4.4.1).

Verification: Verification is expected to be achieved through the following:

Verif. Method	Verif. By	Plan	Notes/Comments
I	ENG	Review design to verify capability to remove the out cave and through wall portions of the MSM on a cart or monorail in the operating gallery.	

3.4.4.3 Startup Testing and Commissioning

Requirement: The HLW HDH design shall provide provisions to support startup and commissioning testing as identified in Appendix A. [Sections 11.4.7, 11.5.1, BOD, ROIN: 8-6066, ROIN: 8-3756][Section 9.1, ORD, ROIN: 8-8067]

Basis Discussion: Additional nozzles, branch lines, removable spools or other provisions that are needed to support identified testing are to be provided, as jointly determined by the design agency, startup, and commissioning during the design development and review process, with consideration given to the tests and demonstration activities required for requirement verifications specified in Appendix A.

Verification: Verification is expected to be achieved through the following:

Verif. Method	Verif. By	Plan	Notes/Comments
A	ENG	Analysis of the HLW HDH to determine the provisions needed to support tests/demonstrations to be performed during startup and commissioning.	Document in an evaluation/assessment. Startup and Commissioning to participate in and/or review the evaluation/assessment.
I	ENG	Review design to verify requirement is met based on established tests/demonstrations to be performed during startup and commissioning.	Document in an evaluation/assessment.

3.4.4.4 Emergency Stop Buttons

Requirement: In accordance with 29 CFR 1910 (OSHA), the following equipment shall include an emergency stop or equivalent disconnect located in an accessible area near the equipment. [Sections 7.3.9.1, 11.5.1, BOD, ROIN: 1-40683, ROIN: 8-3757][Section 11.12.5.3, ORD, ROIN: 1-40021, ROIN: 8-8287]

- Rinse Bogie Maintenance Area Lower Crane – HDH-CRN-00002
- Rinse Bogie Maintenance Area Upper Crane – HDH-CRN-00004
- Canister Decontamination Crane – HDH-CRN-00005
- Decontamination Cave Crane Maintenance Area West Jib Crane – HDH-CRN-00006
- Decontamination Cave Crane Maintenance Area East Jib Crane – HDH-CRN-00007
- Swabbing Robot – HDH-MANIP-00001

Basis Discussion: Emergency stops are included when personnel are in the area of operating equipment. The swabbing robot requires hands on maintenance and testing. At these times, an operator is near the equipment so an emergency stop is included.

Verification: Verification is expected to be achieved through:

Verif. Method	Verif. By	Plan	Notes/Comments
I	ENG	Review HDH design to verify incorporation of emergency stops on equipment bulleted above.	ES&H to participate in the evaluation/assessment and/or review the evaluation/assessment.
D	SU/COM	Demonstrate the operation of emergency stops for the listed equipment.	

3.4.4.5 Emergency Stop Reporting

Requirement: Equipment emergency stops shall provide a status signal and remain in a shut-down state until the circuit is physically reset. Emergency stops on equipment connected to the MHJ provide a status signal to the MHJ. Emergency stops on equipment with no MHJ connection provide a status signal for a local indicator. [Section 7.3.9.1, BOD, ROIN: 1-40684][Section 11.12.5.3, ORD, ROIN: 1-40021, ROIN: 8-8287]

Basis Discussion: None.

Verification: Verification is expected to be achieved through:

Verif. Method	Verif. By	Plan	Notes/Comments
I	ENG	Review design to verify emergency stops provide the appropriate status signal, based on parent equipment MHJ connectivity, and remain in a shutdown state until the circuit is physically reset.	
D	SU/COM	Demonstrate emergency stop reporting and reset functions.	

3.4.4.6 Canister Transfers

Requirement: The HDH system shall provide the capability to perform the following canister transfers: (J.1.1)

- Receive canister from HPH system (A.1)

- Transfer canister rinse vessel with canister from below the canister handling cave export hatch to the canister rinse station (A.1.1)
- Transfer canister rinse vessel with canister from rinse station to below the decontamination cave import hatch (A.3)
- Transfer canister from canister rinse vessel into a decontamination vessel (A.3, A.4)
- Transfer canister from decontamination vessel to visual inspection station (A.6)
- Transfer canister from visual inspection station to swabbing turntable (A.9)
- Transfer canister from swabbing turntable to decontamination cave export hatch and into transfer tunnel bogie (A.13, A.13.1, A.14)
- Transfer canister on canister transfer tunnel bogie from below decontamination cave export hatch to below the canister storage cave import hatch (A.14, A.15)
- Transfer canister from visual inspection station to above decontamination cave import hatch (F.1, F.1.1)
- Lower canister through decontamination cave import hatch and into canister rinse vessel (F.1.2)
- Transfer canister rinse vessel with canister from below decontamination cave import hatch to below the canister handling cave export hatch (F.1.3)
- Transfer canister from swabbing turntable into the decontamination vessels (G.1, G.1.1)

Basis Discussion: None.

Verification: Verification is expected to be achieved through:

Verif. Method	Verif. By	Plan	Notes/Comments
I	ENG	Review the design to verify the capability to perform the canister transfers listed above.	
D	SU/COM	Demonstrate the listed canister transfers.	

3.4.4.7 Decontamination

Requirement: System HDH shall provide means to decontaminate equipment, including the canister decontamination cave crane, with CO_2, pressurized warm water, detergent solution, or steam. [Section 11.8.3.1, BOD, ROIN: 2-43152][Section 14.16, ORD, ROIN: 8-474](K.1)

Basis Discussion: None.
[ALARA]

Verification: Verification is expected to be achieved through:

Verif. Method	Verif. By	Plan	Notes/Comments
I	ENG	Review design to verify HDH equipment, facility equipment, or a combination thereof, is provided to perform crane and equipment decontamination, and that the necessary support utilities are available.	Document in an evaluation/assessment. Plant Engineering and Radiological Engineering to participate in and/or review the evaluation/assessment.

3.4.4.8 Remote Equipment Dimensional Record

Requirement: **[HOLD]** Systems and equipment requiring remote installation and maintenance shall have tolerances specified in their design and be as-built with sufficient precision to provide for the ability to remotely install, connect, disconnect, and reconnect all replaceable components. [Section 14.10, ORD, ROIN: 1-40075]

Basis Discussion: As-built documentation of remote equipment and permanent plant interfaces for the remote equipment provides the ability to remotely install, connect, disconnect, and reconnect all replaceable components. This dimensional records program is important to fabrication of replacement parts that are to be installed remotely. This requirement is on HOLD due to a pending ORDCN that is expected to provide more definitive criteria regarding tolerances and as-built precision to be captured in the dimensional records for remotable equipment and attachment points to support fabrication and fit-up of future replacement equipment. [ATS 15-0073]

Verification: Verification is expected to be achieved through:

Verif. Method	Verif. By	Plan	Notes/Comments
I	ENG	Review HDH as-built drawings for remotely replaceable components to verify conformance with dimensional record requirements.	Document in an evaluation/assessment. Note: final in-plant fit-up may be required prior to finalizing dimension records (as-built drawings) for remotely replaceable components.

3.4.4.9 Viewing Operations

Requirement: Cameras and/or shield windows shall provide viewing capabilities to assist in remote HDH mechanical handling operations. [Sections 11.5, 12.4, 14.16, ORD, ROIN: 8-9102, ROIN: 8-14259, ROIN: 1-40045, ROIN: 8-468, ROIN: 8-14269, ROIN: 8-14261](I.1)

Basis Discussion: Cameras for viewing operations are placed to give optimum viewing angles and distance to suit the operations. These operations include but are not limited to: all canister transfers, including those performed with bogies, visual inspection of the canister, and swabbing operations. CCTV monitoring is included in the

control room and at the cave face when the operations are not visible from the cave face. See requirement 3.11.4.2 for controls requirements for the mechanical handling operations.

The cameras and shield windows provide for viewing of remote operations noted in Sections 3.5.3.4, 3.4.4.1, 3.4.4.6, 3.5.4.2, 3.7.1.4, 3.9.1.2, 3.9.1.3, 3.9.4.1, 3.10.4.2, and 3.11.4.2. The ability to use cameras and shield windows to support remote operations will be verified within the course of completing the SU/COM demonstration steps in sections 3.4.4.6, 3.7.1.4, 3.8.4.1, 3.9.1.2, and 3.9.4.1.
[ALARA]

Verification: Verification is expected to be achieved through:

Verif. Method	Verif. By	Plan	Notes/Comments
I	ENG	Review design to verify that the remote cameras and shield windows provide viewing which assists operators with remote HDH mechanical handling operations.	Recommend using a software program such as "IGrip" (or similar).

3.4.4.10 Fire Barrier

Requirement: The following HDH equipment shall be designed with materials and methods of construction that do not reduce the required fire-resistance rating of the barrier they penetrate, as required by IBC 2000 and DOE-STD-1066-97: [Section 10.3.4.7, BOD, ROIN: 1-41107]

- HDH Doors: HDH-DOOR-00002, -00003, -00004, -00005, and -00006
- HDH Hatch: HDH-HTCH-00002
- HDH MSMs: HDH-MANIP-00001, -00002, -00003, and -00004
- HDH Through Wall Devices: HDH-TWDVC-00002 and -00008
- HDH Through Wall Drives: HDH-DRIV-00001,-00002, -00003, -00004, -00005, -00007, and -00008
- HDH Plugs: HDH-PLUG-00001
- HDH Bridge Beam: HDH-DOOR-00002

Basis Discussion: Fire barrier drawings which include barriers related to HDH are:

- 24590-HLW-U1-60-00001, *HLW VITRIFICATION BUILDING FIRE BARRIER DRAWING PLAN AT EL -21'-0"*
- 24590-HLW-U1-60-00002, *HLW VITRIFICATION BUILDING FIRE BARRIER DRAWING PLAN AT EL 0'-0"*
- 24590-HLW-U1-60-00003, *HLW VITRIFICATION BUILDING FIRE BARRIER DRAWING PLAN AT EL 14'-0"*
- 24590-HLW-U1-60-00004, *HLW VITRIFICATION BUILDING FIRE BARRIER DRAWING PLAN AT EL 37'-0"*
- 24590-HLW-U1-60-00005, *HLW VITRIFICATION BUILDING FIRE BARRIER DRAWING PLAN AT EL 58'-0"*
- 24590-HLW-U1-60-00006, *HLW VITRIFICATION BUILDING FIRE BARRIER DRAWING PLAN AT EL 72'-0"*

Verification: Verification is expected to be achieved through:

Verif. Method	Verif. By	Plan	Notes/Comments
I	ENG	Verify all components that penetrate a fire barrier are tested to not less than the required fire resistance rating of the barrier based on the fire exposure and acceptance criteria specified in ASTM E 119. Use of alternative methods for determining fire resistance shall be approved by the building official.	Document in an evaluation/assessment. Evaluation/assessment to be submitted to the building official for approval. Testing to ASTM E-119 is invoked by IBC 2000 and DOE-STD-1066-97.

3.4.4.11 Canister Temperature

Requirement: HDH equipment that comes in direct contact with IHLW canisters shall be designed to withstand a canister surface temperature of 212 °F. [Section 6.9, WTP HLW Canister Processing Activities, ROIN: 40-23664]

Basis Discussion: The HPH system measures the canister temperature in the cooling rack and does not transfer the canister to the canister rinse vessel until the canister is below 212 °F, reference 24590-HLW-3ZD-HPH-00001. This ensures that steam is not produced in the canister rinse vessel.

Verification: Verification is expected to be achieved through:

Verif. Method	Verif. By	Plan	Notes/Comments
I	ENG	Review the design to verify HDH equipment that comes in direct contact with canisters is designed to withstand a canister surface temperature of 212 °F.	

3.5 Vessel and Bogie Requirements

3.5.1 Mission and Functional / Performance Requirements (Including States/Modes)

3.5.1.1 Decontamination Vessel Temperature

Requirement: The HDH decontamination vessels shall provide the capability to heat and maintain the decontamination fluid temperature and cool the contents after decontamination to support the facility throughput. (A.5, C.1, M.1.1)

Basis Discussion: The decontamination temperature is expected to mimic the West Valley Demonstration Project (WVDP). Refer to 24590-HLW-RPT-RT-08-001-05, *Canister Description for Immobilized High Level Waste Product Qualification*. Maintaining the decontamination temperature ensures the canisters are decontaminated in a timeframe that supports facility throughput.

Verification: Verification is expected to be achieved through:

Verif. Method	Verif. By	Plan	Notes/Comments
A	ENG	Perform an analysis documenting that the combined HDH, PCW, and HPS systems design is capable of maintaining the required temperature range to meet process performance requirements.	
I	ENG	Review of HDH vessel design, including interface with PCW and HPS, to verify conformance to the results of the analysis.	Document in an evaluation/assessment.

3.5.1.2 Codes and Standards

Requirement: The HLW HDH vessels shall be designed to ASME *Boiler and Pressure Vessel Code*, Section VIII, Division 1. [Sections 1.3, 11.1.2, 11.7.1, BOD, ROIN: 2-42518, ROIN: 40-10528, ROIN: 1-41200]

Basis Discussion: This includes vessels HDH-VSL-00001, -00002, -00003, -00004, -00007, and -00009.

Verification: Verification is expected to be achieved through:

Verif. Method	Verif. By	Plan	Notes/Comments
A	ENG	Analysis of the HLW HDH vessel design prepared in accordance with ASME Section VIII, Division 1.	Document in an evaluation/assessment.
I	ENG	Review of design to verify conformance to the results of the analysis, including review of supplier-provided design and quality records.	Document in an evaluation/assessment.

3.5.1.3 Heat Exchanger Codes and Standards

Requirement: The HLW HDH heat exchangers shall be designed in accordance with TEMA and ASME VIII, Division 1 standards. [Sections 1.3, 11.1.2, 11.7.1, BOD, ROIN: 2-42518, ROIN: 40-10528, ROIN: 40-10530, ROIN: 1-41203]

Basis Discussion: These codes provide the requirements for design and construction to meet the performance criteria.

Verification: Verification is expected to be achieved through the following:

Verif. Method	Verif. By	Plan	Notes/Comments
A	ENG	Perform an analysis of the heat exchanger design in accordance with TEMA and ASME VIII, Division 1.	Document in an evaluation/assessment.
I	ENG	Review of design to verify conformance to the results of the analysis.	Document in an evaluation/assessment.

3.5.1.4 Mixing

Requirement: The HDH decontamination vessels and neutralization vessel shall provide mixing capabilities. (A.5.3)

Basis Discussion: To aid in the decontamination process, mixing (circulation of ceric nitrate and nitric acid) is required in the decontamination vessels. Mixing is required in the neutralization vessel to prevent the accumulation of solids on the vessel floor and to facilitate chemical reactions. The design decision is to use spargers (refer to requirements 3.5.3.3, 3.5.4.5, and 3.11.1.1.4).

Verification: Verification is expected to be achieved through:

Verif. Method	Verif. By	Plan	Notes/Comments
I	ENG	Review the decontamination and neutralization vessel design to verify mixing capability.	

3.5.1.5 Vessel and Bogie Waste Acceptance Impacting Requirements

3.5.1.5.1 Decontamination Canister Guides

Requirement: The HDH decontamination vessels shall include passive, fixed guides to facilitate loading canisters including internal surfaces (such as guide plates and spray nozzles) that provide sufficient clearance to allow for a maximum size canister after glass pours and canister distortion. [Key Attributes for Design Table, WAI Qualification Plan for Decontamination Vessels, ROIN: 54-3920]

Basis Discussion: None.

Verification: Verification is expected to be achieved through:

Verif. Method	Verif. By	Plan	Notes/Comments
I	ENG	Review of design to verify the decontamination vessels include passive, fixed guides that facilitate loading of canisters and the internal surfaces provide sufficient clearance to allow for a maximum side canister after glass pours and canister distortion.	Ref. WAI Qualification Plan for Decontamination Vessels and 24590-CM-MRA-MVA0-00007, *Pressure Vessels, Shop Fabricated Titanium Small (CM) (N029) (MS012)*, for dimensional requirements and tolerances.

3.5.1.5.2 HLW Canister Rinse Vessel and Canister Transfer Tunnel Bogie Guides

Requirement: The HLW canister rinse vessel and canister transfer tunnel bogie shall contain guide bars with an internal diameter of 27 in. ± 1/4 in. [Key Attributes for Design Table, WAI Qualification Plan for Canister Rinse

Bogie Decontamination Vessel, ROIN: 54-3900][Key Attributes for Design Table, WAI Qualification Plan for HLW Standardized Bogies, ROIN: 54-3899]

Basis Discussion: None.

Verification: Verification is expected to be achieved through:

Verif. Method	Verif. By	Plan	Notes/Comments
I	ENG	Review of design to verify the canister rinse vessel and canister transfer tunnel bogie contain guide bars with an internal diameter of 27 in. ± 1/4 in.	Ref. WAI Qualification Plan for Canister Rinse Bogie Decontamination Vessel and WAI Qualification Plan for HLW Standardized Bogies

3.5.1.5.3 HDH Canister Rinse Vessel Guides Surface Finish

Requirement: The HDH canister rinse vessel guide bars shall have a surface finish of 125 µin. or better. [Key Attributes for Design Table, WAI Qualification Plan for Canister Rinse Bogie Decontamination Vessel, ROIN: 54-3901]

Basis Discussion: None.

Verification: Verification is expected to be achieved through:

Verif. Method	Verif. By	Plan	Notes/Comments
I	ENG	Review of design to verify the canister rinse vessel guide bars have a surface finish of 125 µin. or better.	Ref. WAI Qualification Plan for Canister Rinse Bogie Decontamination Vessel

3.5.1.5.4 HDH Canister Transfer Tunnel Bogie Guides Surface Finish

Requirement: The HDH canister transfer tunnel bogie guide bars and decontamination vessel guide bars shall be profiled and have a surface finish of 63 µin. or better in accordance with ASME B46.1. [Key Attributes for Design Table, WAI Qualification Plan for HLW Standardized Bogie, ROIN: 54-3899][Key Attributes for Design Table, WAI Qualification Plan for Decontamination Vessels, ROIN: 54-3919]

Basis Discussion: None.

Verification: Verification is expected to be achieved through:

Verif. Method	Verif. By	Plan	Notes/Comments
I	ENG	Review of design to verify the canister transfer tunnel bogie guide bars and decontamination vessel guide bars are profiled and have a surface finish of 63 µin. or better in accordance with ASME B46.1.	Ref. WAI Qualification Plan for HLW Standardized Bogie and WAI Qualification Plan for Decontamination Vessels

3.5.1.5.5 HDH Canister Rinse Vessel Sharp Edges

Requirement: The HDH canister rinse vessels guide bars shall have at least a 1/32 in. radius or chamfer applied. [Key Attributes for Design Table, WAI Qualification Plan for Canister Rinse Bogie Decontamination Vessel, ROIN: 54-3902]

Basis Discussion: None.

Verification: Verification is expected to be achieved through:

Verif. Method	Verif. By	Plan	Notes/Comments
I	ENG	Review of design to verify the HDH canister rinse vessels guide bars have at least a 1/32 in. radius or chamfer applied.	Ref. WAI Qualification Plan for Decontamination Vessels

3.5.1.5.6 HDH Canister Transfer Tunnel Bogie Material

Requirement: **[HOLD]** The HDH canister transfer tunnel bogie shall not contact the IHLW canisters with any material other than stainless steel. [Key Attributes for Design Table, WAI Qualification Plan for HLW Standardized Bogies, ROIN: 54-3897]

Basis Discussion: Parts of the bogie that contact the canister could be manufactured from materials that are not compatible with the 304L stainless steel canister. The reason for the HOLD is that the requirement for material compatibility with a canister external surface has been removed in both the *Waste Acceptance Impacting Items and Activities* (24590-HLW-RPT-PR-01-001) and *WTP HLW Canister Handling* (24590-HLW-WSF-ENG-07-002) documents but not in the *HLW Standardized Bogies* (24590-HLW-WIQP-MH-09-0003) document. See CCN 192495 for more information.
[ALARA]
[ATS 15-0074]

Verification: Verification is expected to be achieved through:

Verif. Method	Verif. By	Plan	Notes/Comments
I	ENG	Review of design to verify the canister transfer tunnel bogie does not contact the canister with any material other than stainless steel.	Ref. WAI Qualification Plan for HLW Standardized Bogies

3.5.1.5.7 HDH Canister Transfer Tunnel Bogie Damage to Canister

Requirement: The HDH canister transfer tunnel bogie shall ensure the IHLW canisters do not become scratched or scuffed during loading or unloading into the canister sleeves during transportation on the bogies. [Key Attributes for Design Table, WAI Qualification Plan for HLW Standardized Bogies, ROIN: 54-3898]

Basis Discussion: None.
[ALARA]

Verification: Verification is expected to be achieved through:

Verif. Method	Verif. By	Plan	Notes/Comments
I	ENG	Review of design to verify the HDH canister transfer tunnel bogie does not scratch or scuff the IHLW canisters during loading or unloading of the canisters.	Ref. WAI Qualification Plan for HLW Standardized Bogies

3.5.1.6 HDH Vessel Interfaces

Requirement: The HDH design shall provide the capability to transfer effluent from the HDH canister rinse vessel to the neutralization vessel. (B.1, B.2, B.3, M.1.5)

Basis Discussion: None.

Verification: Verification is expected to be achieved through:

Verif. Method	Verif. By	Plan	Notes/Comments
I	ENG	Review the design to verify the capability to transfer effluent from canister rinse vessel to neutralization vessel.	

3.5.1.7 HDH Heat Transfer Coil Design Life

Requirement: The HDH decontamination vessels heat transfer coils shall be designed for a 40 year life without maintenance or replacement, including consideration of wear from thermal cycling and vibration. [Section 14.2, ORD, ROIN: 1-40063, ROIN: 8-7717]

Basis Discussion: The HDH coils are used to heat and cool the decontamination vessel contents by circulating either hot or cold water through the coils. The coils are designed to ensure that cyclic mechanical and thermal wear do not cause premature failure of the coils. See requirement 3.4.1.2.2 for design for erosion/corrosion.

Verification: Verification is expected to be achieved through:

Verif. Method	Verif. By	Plan	Notes/Comments
A	ENG	Perform an analysis to verify cyclic fatigue does not reduce the heating/cooling coils 40 year design life.	
I	ENG	Review the HDH heat transfer coil design to verify conformance to the analysis.	

3.5.2 Nuclear Safety, ALARA, Environmental, and Other Regulatory Requirements

3.5.2.1 Unobstructed Overflow Path

Requirement: Each HDH vessel shall include an overflow feature designed to provide an unobstructed escape flow path for liquids or gases during abnormal operating conditions (e.g., loss of negative pressure or vessel contents in excess of operational level limits). [Section 6.7.5, BOD, ROIN: 40-391, ROIN: 1-40592, ROIN: 1-40595, ROIN: 1-40593]

Basis discussion: The overflow feature is designed to maintain the headspace volume in HDH vessels. The headspace volume in the HDH vessels is maintained by designing the overflow feature to account for abnormal operating conditions, such as from operator error or equipment malfunction, that result in positive pressure or vessel content levels in excess of normal operations. The overflow features provide a pathway for the vessel's liquids and headspace atmospheres to exit the HDH vessels. These lines are designed to prevent the buildup of material that could cause blockages.

Verification: Verification is expected to be achieved through:

Verif. Method	Verif. By	Plan	Notes/Comments
I	ENG	Review of HDH vessel design to verify incorporation of an overflow feature.	Document in an evaluation/assessment.

3.5.2.2 Hydrogen Mitigation

Requirement: The HDH canister rinse vessel shall have an overflow < 70 in. from the bottom of the vessel. [Section 5.6.34, Appendix 4B.4.3, PDSA - HLW Facility, ROIN: 43-1320, ROIN: 45-8556]

Basis discussion: If the liquid level in the canister rinse vessel is < 70 in., the lower flammability limit (LFL) is > 1000 hr (Appendix 4B.4.3, PDSA – HLW Facility). The overflow location prevents the accumulation of hydrogen by providing sufficient headspace.

Verification: Verification is expected to be achieved through:

Verif. Method	Verif. By	Plan	Notes/Comments
I	ENG	Review of canister rinse vessel design to verify the overflow is < 70 in. from the bottom of the vessel.	

3.5.2.3 Canister Rinse Vessel Rinse Line Material

Requirement: The HDH canister rinse vessel rinse line shall be constructed of organic material. [Appendix 4B.4.2, PDSA - HLW Facility, ROIN: 45-8555]

Basis discussion: If a canister is stored in the rinse vessel for an extended period of time, hydrogen could accumulate in the rinse line. The rinse line is constructed or organic material that does not damage surrounding SS/SC equipment in the event of a hydrogen explosion in the rinse line.

Verification: Verification is expected to be achieved through:

Verif. Method	Verif. By	Plan	Notes/Comments
I	ENG	Review of canister rinse vessel rinse line design to verify construction using organic material.	

3.5.2.4 Overflow Size

Requirement: The HDH vessels overflow design shall be sized to at least meet the maximum in-flow rate while maintaining a minimum vapor headspace to prevent liquid flooding into the vessel ventilation header. [Section 6.7.5, BOD, ROIN: 1-40595]

Basis discussion: The overflow feature reduces the potential for a hydrogen explosion by ensuring an adequate headspace volume to disperse hydrogen generated in the HDH vessels.

Verification: Verification is expected to be achieved through:

Verif. Method	Verif. By	Plan	Notes/Comments
A	ENG	Perform an analysis to document the configuration, sizing, and location of the HDH vessel overflow feature meets the required headspace for maximum in-flow rate.	Document in DVR
I	ENG	Review of design to verify conformance to the analysis results.	Document in DVR

3.5.2.5 Hydrogen Mitigation

Requirement: The HDH decontamination vessels lids shall include stand-offs. [Appendix 4B.4.4, PDSA – HLW Facility, ROIN: 45-8557]

Basis discussion: The decontamination vessel design includes stand-offs to prevent the lid from fully sealing.

Verification: Verification is expected to be achieved through:

Verif. Method	Verif. By	Plan	Notes/Comments
I	ENG	Review of the decontamination vessel design to verify incorporation of stand-offs.	

3.5.2.6 Canister Rinse Vessel Service Hoses

Requirement: The design shall provide the capability of disconnecting the rinse services hoses in the rinse tunnel before the bogie enters the maintenance area. [Appendix A, RPP, ROIN: 2-43013](N.1.2.1)

Basis discussion: This is discussed in an as low as reasonably achievable (ALARA) design review (ADR) 24590-HLW-ADR-M-02-005, *HLW Canister Rinse Bogie Services Design Evaluation.* The rinse services hoses pick up significant contamination from the floor of the C5 designated rinse tunnel. Disconnecting these hoses prior to the bogie entering the maintenance area prevents contamination of the maintenance area. The hoses are designed to minimize leakage when disconnected.
[ALARA]

Verification: Verification is expected to be achieved through:

Verif. Method	Verif. By	Plan	Notes/Comments
I	ENG	Review of the design to verify the capability to disconnect service hoses from the canister rinse bogie before it enters maintenance area.	
D	SU/COM	Demonstrate the capability to disconnect the service hoses from the canister rinse bogie before it enters the maintenance area.	

3.5.2.7 Canister Rinse Vessel Power/Control Energy Train

Requirement: The design shall provide the capability of disconnecting the canister rinse bogies power/control energy train in the rinse tunnel and using a separate maintenance area power/control energy train located in the maintenance area to move the bogie into the maintenance area. [Section 11.8.3.1, BOD, ROIN: 1-41215][Appendix A, RPP, ROIN: 2-43013](N.1.2.2)

Basis discussion: The power/control train picks up significant contamination from the floor of the C5 designated rinse tunnel. Disconnecting this train prior to the bogie entering the maintenance area prevents contamination from the power train from spreading into the maintenance area. A separate power/control train located in the maintenance area is connected to the bogie and used to move the bogie into the maintenance area. This capability simplifies the shield door design and promotes ALARA by not exposing workers to contaminated equipment. The rinse tunnel has decontamination capabilities to decontaminate the hoses prior to manned entry into the canister rinse tunnel. This feature is discussed in 24590-HLW-ADR-M-02-007, *Rinse Bogie Energy Chain.*
[ALARA]

Verification: Verification is expected to be achieved through:

Verif. Method	Verif. By	Plan	Notes/Comments
I	ENG	Review of the design to verify the capability to disconnect power/control train from the canister rinse bogie and using a separate power/control train located in the maintenance area to move the bogie.	
D	SU/COM	Demonstrate the capability to disconnect power/control train from the canister rinse bogie and using a separate power/control train located in the maintenance area to move the bogie.	

3.5.2.8 Canister Rinse Vessel Lid

Requirement: The HDH canister rinse bogie maintenance area shall include the capability to install a stainless steel lid on the canister rinse vessel in the maintenance area. [Appendix A, RPP, ROIN: 2-43013](N.1.2.3)

Basis discussion: This feature is discussed in 24590-HLW-ADR-M-02-007, *Rinse Bogie Energy Chain.* A maintenance crane is used to install a lid on the canister rinse vessel once the vessel is in the maintenance area. [ALARA]

Verification: Verification is expected to be achieved through:

Verif. Method	Verif. By	Plan	Notes/Comments
I	ENG	Review the design to verify the capability to install a stainless steel lid on the canister rinse vessel in the maintenance area.	
D	SU/COM	Demonstrate the capability to install the stainless steel lid on the canister rinse vessel in the maintenance area.	

3.5.2.9 Overflow Size

Requirement: The neutralization vessels overflow shall be constructed of 6 in. schedule 10S piping. [Appendix 4B.1.15, PDSA - HLW Facility, ROIN: 45-8533]

Basis discussion: Using this pipe size for the overflow line maintains an acceptable time to the lower flammability limit.

Verification: Verification is expected to be achieved through:

Verif. Method	Verif. By	Plan	Notes/Comments
I	ENG	Review of the vessel design to verify incorporation of 6in. schedule and 10s piping.	

3.5.3 System Interface Requirements

3.5.3.1 Radioactive Liquid Disposal System – Transfer Effluent

Requirement: The HDH system shall be capable of transferring effluent from the neutralization vessel to the RLD system. (B.4, M.1.6)

Basis Discussion: Steam ejectors are used for the transfer. Demonstration is performed during verification of the requirement 3.5.3.2.

Verification: Verification is expected to be achieved through:

Verif. Method	Verif. By	Plan	Notes/Comments
I	ENG	Review of system design to verify the capability to transfer effluent from the neutralization vessel to the RLD system.	

3.5.3.2 High Pressure Steam - Steam Ejectors

Requirement: The HDH decontamination vessels and neutralization vessels steam ejectors shall interface with the HPS to receive steam to transfer effluent from the decontamination vessels to the neutralization vessel and from the neutralization vessel to the RLD system. (B.2, B.4, M.1.6)

Basis Discussion: None.

Verification: Verification is expected to be achieved through:

Verif. Method	Verif. By	Plan	Notes/Comments
A	ENG	Perform an analysis to document the required steam supply to transfer vessel effluent.	
I	ENG	Review of the design to verify conformance to analysis.	Document in an evaluation/assessment.
D	SU/COM	Demonstrate the steam ejectors capability to transfer wash water and decontamination effluent from the HDH decontamination vessels to the neutralization vessel and from the neutralization vessel to the RLD system.	

3.5.3.3 Instrument Service Air System – Sparge Air

Requirement: The HDH design shall interface with ISA to supply air to spargers in the decontamination vessels and neutralization vessel that provide adequate mixing. (A.5, A.5.3, B.3, M.1.9)

Basis Discussion: The decontamination vessels and neutralization vessel include spargers for mixing.

Verification: Verification is expected to be achieved through:

Verif. Method	Verif. By	Plan	Notes/Comments
A	ENG	Perform an analysis to document the required sparger flow rates to achieve adequate mixing.	
I	ENG	Review the decontamination and neutralization vessel designs to verify conformance to analysis.	Document in an evaluation/assessment.

3.5.3.4 Receive Ceric Nitrate

Requirement: The HDH design shall use a nitric acid and ceric nitrate chemical milling immersion process to decontaminate the IHLW canisters and provide the capability to supply ceric nitrate to the decontamination vessels. Departures from the WVDP decontamination process design shall be documented. [C.7(d)(2)(iv), WTP Contract, ROIN: 1-25981][Section 1.1.2.6, 5.2.5, 5.2.7, 6.11.1, *WTP HLW Canister Processing Activities*, ROIN: 40-23552, ROIN: 40-23594, ROIN: 40-23674, ROIN: 40-23596][Appendix A (line 151), (line 153), (line 155), WAI Items and Activities, ROIN: 45-1791, ROIN: 45-1787, ROIN: 45-1789](A.5, A.5.2)

Basis Discussion: The decontamination process mimics that of WVDP and per WAI items and activities, an analysis is performed to compare the WTP decontamination process to that of WVDP. Ceric nitrate is added to the decontamination vessels during decontamination to perform the chemical milling process. The current design includes operators manually loading ceric nitrate for each batch as shown in 24590-HLW-M5-V17T-00006, *Process Flow Diagram HLW Vitrification HLW Canister Decon (System HDH)*, Note 10; however, a tank capable of automatic addition may be added to the design per 24590-HLW-TB-ENG-14-0001, *Engineering Design Decision for HLW HDH.*

After decontamination, the canister is swabbed to verify removable contamination levels on the external surfaces of the canister do not exceed 3,670 Bq/m^2 (2,200 dpm/100 cm^2) for alpha and 36,700 Bq/m^2 (22,000 dpm/100 cm^2) for beta-gamma. (Section C.8.1.2.2.1.2(3), WTP Contract). If levels are above allowable, the canister is decontaminated again. Decontamination demonstration during hot commissioning is WAI.
[ALARA]

Verification: Verification is expected to be achieved through:

Verif. Method	Verif. By	Plan	Notes/Comments
A	ENG	Perform an analysis to verify the applicability of the WVDP process to the WTP system and document any process design departures.	This analysis is WAI. Document in the waste form qualification report (WQR).
I	ENG	Review the HDH design to verify the ability to perform a chemical milling process using nitric acid and ceric nitrate in the decontamination vessels.	
D	SU/COM	Demonstrate the decontamination process prior to hot commissioning.	
D	SU/COM	Demonstrate the decontamination process during hot commissioning.	This demonstration is WAI.

3.5.3.5 Demineralized Water and Nitric Acid Reagent Systems – Canister Washing

Requirement: The HDH design shall interface with the DIW and NAR to supply DIW, nitric acid, and a combination of both to the decontamination vessels. (A.5, A.5.2, M.1.11, M.1.12)

Basis Discussion: Nitric acid and DIW can be added individually or can be added simultaneously and mixed inline prior to entering the vessel. Nitric acid is added individually during decontamination and during nitric acid spray downs of the canisters. DIW is added individually during DIW canister spray downs. A nitric acid and DIW mixture is used for vessel wash downs. See requirement 3.5.4.1 for vessel wash down capabilities and requirement 3.5.4.2 for canister spray downs.

Verification: Verification is expected to be achieved through:

Verif. Method	Verif. By	Plan	Notes/Comments
I	ENG	Review of the HDH design to verify the interface with the DIW and NAR and decontamination vessels capability to receive DIW, nitric acid, and a combination of DIW and nitric acid.	

3.5.3.6 Receive Hydrogen Peroxide

Requirement: The HDH design shall include provisions to add hydrogen peroxide to the HDH neutralization vessel. (B.3)

Basis Discussion: Hydrogen peroxide may be added to the neutralization vessel to reduce unreacted ceric nitrate from the decontamination process. The current design includes manual addition of hydrogen peroxide to the neutralization vessel as shown in 24590-HLW-M5-V17T-00006, *Process Flow Diagram HLW Vitrification HLW Canister Decon (System HDH)*, Note 10.

Verification: Verification is expected to be achieved through:

Verif. Method	Verif. By	Plan	Notes/Comments
I	ENG	Review of HDH design to verify provisions to add hydrogen peroxide.	

3.5.3.7 Sodium Hydroxide Reagent System - Receive Sodium Hydroxide

Requirement: The HDH design shall interface with SHR to supply sodium hydroxide to the HDH neutralization vessel. (B.3)

Basis Discussion: Sodium hydroxide is used to treat the effluent in the neutralization vessel before transfer to the RLD system.

Verification: Verification is expected to be achieved through:

Verif. Method	Verif. By	Plan	Notes/Comments
I	ENG	Review of HDH design to verify provisions to add sodium hydroxide to the HDH neutralization vessel.	

3.5.3.8 Plant Wash and Disposal System – Vessel Wash Water

Requirement: The HDH design shall interface with PWD to supply DIW to the canister rinse vessel and neutralization vessel. [Sections 5.2, 14.1, 20.0, ORD, ROIN: 1-39931, ROIN: 8-3587, ROIN: 8-4682](A.2, M.1.10)

Basis Discussion: The canister rinse vessels piping has the capability to spray the canisters and decontaminate the vessel walls with demineralized water from PWD. The neutralization vessel has the capability to decontaminate with demineralized water from PWD, sodium hydroxide, or a combination of both to decontaminate the vessel walls. See requirement 3.5.4.3 for canister spray downs and requirement 3.5.4.1 for vessel wash downs. [ALARA]

Verification: Verification is expected to be achieved through:

Verif. Method	Verif. By	Plan	Notes/Comments
I	ENG	Review of the design to verify the interface between the PWD system to supply DIW to the HDH canister rinse vessel and neutralization vessel.	

3.5.3.9 Plant Cooling Water System - Vessel Cooling Water

Requirement: The HDH design shall interface with the PCW to supply cooling water to the decontamination vessels. (C.1, M.1.7)

Basis Discussion: PCW supplies cooling water through the decontamination coils to cool the contents of the decontamination vessel.

Verification: Verification is expected to be achieved through:

Verif. Method	Verif. By	Plan	Notes/Comments
A	ENG	Perform an analysis to document the required temperature and flow rates of PCW cooling water supplied to decontamination vessels.	
I	ENG	Review the HDH and PCW design to verify conformance to analysis results.	Document in an evaluation/assessment.
T	SU/COM	Perform a functional test to confirm the PCW provides cooling water supply to the HDH decontamination vessels at the required temperatures and flow rates.	

3.5.3.10 Process Vessel Vent Exhaust System - Vessel Ventilation

Requirement: The HDH neutralization vessel shall interface with the PVV for ventilation. [Section 12.5.6, BOD, ROIN: 1-41306](B.3)

Basis Discussion: None.

Verification: Verification is expected to be achieved through:

Verif. Method	Verif. By	Plan	Notes/Comments
I	ENG	Review of the neutralization vessel design to verify the interface with the PVV system.	Document in DVR

3.5.3.11 Pulse Jet Ventilation – Exhaust Interface

Requirement: The HDH decontamination vessel overflow piping shall include a vent to the PJV. (D.1)

Basis Discussion: The PJV is used to vent the decontamination vessels because the expected levels of contamination are less than that of PVV. Using the PJV prevents the possibility of higher levels of contamination in PVV from cross-contaminating the decontamination vessels and neutralization vessel. [ALARA]

Verification: Verification is expected to be achieved through:

Verif. Method	Verif. By	Plan	Notes/Comments
I	ENG	Review of the system design to verify inclusion of vents to the PJV on the HDH decontamination vessel overflow piping.	

3.5.3.12 High Pressure Steam – Heat Exchanger

Requirement: The HDH heat exchangers shall interface with HPS to receive steam. (C.1, M.1.8)

Basis Discussion: The design decision is to use heat exchangers that interface with high pressure steam to heat water which is circulated through the decontamination vessel coils to maintain the decontamination fluid temperature.

Verification: Verification is expected to be achieved through:

Verif. Method	Verif. By	Plan	Notes/Comments
A	ENG	Perform an analysis to document the required steam supply to the HDH heat exchangers.	
I	ENG	Review the HDH design to verify conformance to the analysis.	Document in an evaluation/assessment.

3.5.3.13 Instrument Service Air – Inflatable Lid Seal

Requirement: The HDH canister rinse vessel inflatable seal shall provide the capability of receiving air from ISA. (A.2.1, M.1.4)

Basis Discussion: None.

Verification: Verification is expected to be achieved through:

Verif. Method	Verif. By	Plan	Notes/Comments
I	ENG	Review of the vessel design to verify ability to receive air from ISA to inflate the seal.	

3.5.4 Other Technical, Specialty, Operations and Maintenance Requirements

3.5.4.1 Vessel Washing

Requirement: The HDH vessels shall include internal spray mechanisms to wash the vessel walls and internals. [Sections 11.7.4, 16.4.8, BOD, ROIN: 2-43143, ROIN: 8-5260A][Sections 14.2, 20.0, ORD, ROIN: 1-40064, ROIN: 8-4690A, ROIN: 8-4682]

Basis Discussion: The vessels include internal spray mechanisms to facilitate the removal of contamination and prevent the buildup of solids on the vessel walls. The HDH vessels are to be cleaned prior to removal for D&D or maintenance/replacement activities. This supports ALARA objectives. The transfer of wash water is demonstrated during verification of requirements 3.5.1.6 and 3.5.3.2.
[ALARA]

Verification: Verification is expected to be achieved through:

Verif. Method	Verif. By	Plan	Notes/Comments
I	ENG	Review of design to verify internal spray mechanisms are designed in accordance with 24590-WTP-GPG-M-013, *Plant Wash System Design.*	
D	SU/COM	Demonstrate the capability to wash the vessel walls and internals.	

3.5.4.2 Decontamination Vessel Canister Spray Downs

Requirement: The HDH decontamination vessels shall provide the capability to spray IHLW canisters with nitric acid and DIW. (A.5, A.5.4, M.1.11, M.1.12)

Basis Discussion: DIW and nitric acid are supplied to the decontamination vessels internal spray rings for spraying of the canisters after decontamination. See requirement 3.5.3.5 for the interface with NAR and DIW.
[ALARA]

Verification: Verification is expected to be achieved through:

Verif. Method	Verif. By	Plan	Notes/Comments
I	ENG	Review of decontamination vessel design to verify capability to spray the IHLW canisters with nitric acid and DIW.	
D	SU/COM	Demonstrate the decontamination vessels capability to spray the IHLW canisters with nitric acid and DIW.	

3.5.4.3 Canister Rinse Vessel Rinsing

Requirement: The HDH canister rinse vessel shall provide the capability to spray IHLW canisters with DIW. (A.2)

Basis Discussion: DIW is supplied to the canister rinse vessel by the PWD system. See requirement 3.5.3.8 for the interface with PWD.
[ALARA]

Verification: Verification is expected to be achieved through:

Verif. Method	Verif. By	Plan	Notes/Comments
I	ENG	Review of canister rinse vessel design to verify capability to spray the IHLW canisters with DIW.	
D	SU/COM	Demonstrate the canister rinse vessels capability to spray the IHLW canisters with DIW.	

3.5.4.4 Bogie Backup/Recovery

Requirement: The HDH system shall include backup/recovery provisions to remotely recover the canister rinse bogie and canister transfer tunnel bogie, under maximum load. [Section 7.1, ORD, ROIN: 8-3582][Section 7.1, ORD, ROIN: 8-3582](J.1.3, N.1.2, N.1.3)

Basis Discussion: Remote recovery occurs when the failed bogie is carrying a canister. Canister rinse bogie remote recovery concludes with the bogie positioned below HDH-HTCH-00004. Transfer tunnel bogie remote recovery concludes with the bogie positioned below HEH-HTCH-00004. The recovery systems also pull the failed bogies to their respective maintenance/repair stations.

Verification: Verification is expected to be achieved through:

Verif. Method	Verif. By	Plan	Notes/Comments
I	ENG	Review of design to verify the capability to remotely recover the loaded bogie (canister rinse and transfer tunnel).	
D	SU/COM	Demonstrate recovery in accordance with 24590-WTP-PL-RACT-RT-0001, *WTP Remotability Verification Plan*.	

3.5.4.5 Bubbler Material

Requirement: The HDH decontamination vessel bubblers shall be constructed of ½ inch schedule 40S pipe and be connected to the air supply via high-pressure instrument tubing. [Appendix 4B.4.7, PDSA – HLW Facility, ROIN: 45-8563]

Basis Discussion: Bubblers in HDH-VSL-00002/-00004 may accumulate hydrogen due to radiolysis. The lines are ½ inch schedule 40S and connected to the air supply via high-pressure instrument tubing. The high points are at atmospheric pressure at stagnant condition. The bubblers as demonstrated in the PRC-DDT calculation do not fail elastically given a detonation (Section 4B.4.7, PDSA – HLW Facility). Refer to 24590-QL-HC4-W000-00067-02-00001, *Calculation – Hanford WTP Hydrogen Bubble in Full Pipe* and 24590-QL-HC4-W000-00067-02-00020, *Calculation – DDT Near Closed End Parametric Analysis*.

Verification: Verification is expected to be achieved through:

Verif. Method	Verif. By	Plan	Notes/Comments
I	ENG	Review the HDH decontamination vessel bubbler design to verify usage of 1/2 inch schedule 40S pipe and high-pressure instrument tubing for the connection to the air supply.	

3.5.4.6 Operator Reaction Time

Requirement: The HDH vessels shall provide level limit switches and overflow features to contain contaminated liquid without relying on operator manual action for at least 30 minutes after the onset of a credible failure event. [Section 11.10, ORD, ROIN: 9-52]

Basis Discussion: In the event that excess liquid accumulates in a vessel from a credible failure event (e.g. pump doesn't turn off or is inoperable, plugged piping, steam ejector inoperable) provisions are provided to properly contain the liquid without operator manual action for at least 30 minutes. The vessels are provided with high level limit switches which are interlocked with pumps, steam ejectors, and other equipment. If the high level is reached, equipment is operated to control the liquid level in the vessel. If these interlocks or equipment fail, overflow features are provided to route the liquid to sumps for transfer to the RLD system.

Verification: Verification is expected to be achieved through:

Verif. Method	Verif. By	Plan	Notes/Comments
I	ENG	Review the HDH design to verify no manual operator action is required to contain contaminated liquid for 30 minutes after a credible failure event.	Document in an evaluation/assessment. Ops to participate in and/or review the evaluation/assessment.

3.5.4.7 Modular Bogie Components

Requirement: The HDH canister rinse bogie and canister transfer tunnel bogie shall include modular, separable components for ease of maintenance/replacement. This consists of the following: [Section 11.8.3.1, BOD, ROIN: 2-43155][Section 7.1, ORD, ROIN: 8-6578]

- Wheel assemblies
- Gear boxes, motors, and brakes

Basis Discussion: Motors, gear reducers, and wheel bearings subject to failure are located and mounted such that they can be replaced by one or two personnel using an overhead maintenance crane as necessary. This is to be done by minimizing shimming and alignment of motors and gear boxes.
[ALARA]

Verification: Verification is expected to be achieved through:

Verif. Method	Verif. By	Plan	Notes/Comments
I	ENG	Review the HDH canister rinse bogie and canister transfer tunnel bogie to verify the use of modular components.	Document in an evaluation/assessment. Plant Design to participate in and/or review the evaluation/assessment.

3.6 Piping Requirements

3.6.1 Mission and Functional / Performance Requirements (Including States/Modes)

3.6.1.1 Piping Codes and Standards

Requirement: The HLW HDH piping design, fabrication, inspection, and testing of the piping shall be in accordance with ASME B31.3, *Process Piping*, 1996 edition, as tailored in Appendix C, Section C.26, of the Safety Requirements Document. [Sections 11.7.1, 16.4.1.3, BOD, ROIN: 1-41204, ROIN: 8-5238][Appendix C, Section C.26, SRD, ROIN: 2-22488]

Basis Discussion: The pipe, flanges, and valves are in accordance with the long stock code descriptions listed in applicable pipe class specifications used for the HLW HDH system. 24590-WTP-3PS-P000-T0001 provides a summary listing of all the pipe class specifications used on WTP. Each pipe class sheet lists the design code used for the specific pipe class specification. The pipe, fittings, flanges, and valves used are in accordance with the design code listed on the specific pipe class specification. There are specific numbered in-line components provided by other engineering disciplines that are in accordance with the design code requirements listed in the applicable engineering specification for the specific component.

Verification: Verification is expected to be achieved through:

Verif. Method	Verif. By	Plan	Notes/Comments
A	ENG	Perform an analysis of the piping design in accordance with ASME B31.3, 1996 edition, as tailored in Appendix C, Section C.26, of the SRD.	
I	ENG	Review of the design to verify conformance to the analysis results.	Document in an evaluation/assessment that may be performed using a sampling basis or documented in DVR.

3.6.1.2 Fully-Welded Piping

Requirement: All in-cell process piping that is nonmaintainable shall be fully welded. [Sections 11.7.4, 16.4.1.1, BOD, ROIN: 2-43143, ROIN: 8-5233]

Basis Discussion: The in-cell piping in contact with the HLW or containing chemicals provides containment of the process fluid. [ALARA]

Verification: Verification is expected to be achieved through:

Verif. Method	Verif. By	Plan	Notes/Comments
I	ENG	The system design is reviewed to verify fully-welded, nonmaintainable piping except for jumpers.	Document in DVR (although not safety, hard-to-reach piping is included)

3.6.1.3 Siphon Prevention

Requirement: Service piping lines that enter a vessel, and are potentially submerged within the vessel, shall be configured to provide one barometric head of isolation above the maximum liquid level of the vessel. The piping design for steam ejectors shall meet this requirement. [Sections 7.1, 14.3, ORD, ROIN: 9-37, ROIN: 9-36, ROIN: 8-3949][Section 5.1.2, BOD, ROIN: 1-40438][Section 5.6.7, PDSA-HLW Facility, ROIN: 40-26]

Basis Discussion: One barometric head of isolation on service piping lines prevents contamination spread up these utility or process lines (accomplished by 34 ft of vertical pipe or piping to a destination open to air, and the piping and destination is always above the liquid level in the vessel).
[ALARA]

Verification: Verification is expected to be achieved through:

Verif. Method	Verif. By	Plan	Notes/Comments
I	ENG	Review the piping design to verify one barometric head of isolation above the maximum liquid level of the vessel on service lines that may become submerged.	Document in DVR

3.6.1.4 Pressure Relief Valves

Requirement: Pressure relief valves shall be configured using a full port three-way valve, dual pressure safety valves (PSV), and drain valves on each leg. [Section 14.4, ORD, ROIN: 8-7760]

Basis Discussion: The HDH pressure relief valves are configured so that there is no service outage while servicing a PSV. Pressure relief valves are located on the HPS inlet to the heat exchangers, hot water outlet of the heat exchanger, hot/cold water return from the decontamination vessels, and at the hot water head vessels.

Verification: Verification is expected to be achieved through:

Verif. Method	Verif. By	Plan	Notes/Comments
I	ENG	Review the piping design to verify pressure relief valves are configured using full port three-way valves, dual PSVs, and a drain valve on each leg.	Document in DVR

3.6.2 Nuclear Safety, ALARA, Environmental, and Other Regulatory Requirements

3.6.2.1 Isolation of Utility Supply Lines

Requirement: The utility supply lines (e.g., air, steam and plant wash) to the HDH vessels shall include provisions to mechanically isolate utility lines from all waste containing systems that could potentially result in contaminating the utility supply lines. [Section 7.1, ORD, ROIN: 9-36][Section 5.1.2, BOD, ROIN: 1-40438]

Basis Discussion: This mechanical isolation design feature (e.g., valves, blind flange, spectacle blinds, or capped lines) ensures no connection exists between the utility supply to prevent backflow of contamination. [ALARA]

Verification: Verification is expected to be achieved through:

Verif. Method	Verif. By	Plan	Notes/Comments
I	ENG	Review the piping design to verify mechanical isolation capabilities on supply lines.	Document in an evaluation/assessment.

3.6.2.2 Contamination Backflow Prevention

Requirement: HDH steam ejector steam supply lines shall include provisions to prevent the backflow of contamination into the supply lines upon loss of supply steam. [Sections 14.1, 14.3, ORD, ROIN: 8-3583, ROIN: 8-3949]

Basis Discussion: Air is used after a transfer to purge the steam line. This prevents backflow of contamination into the steam supply lines by reducing the potential for vacuum to form in the steam supply lines due to steam collapse as it cools. This requirement is ALARA because it prevents the spread of contamination from high contamination areas to low contamination areas. [ALARA]

Verification: Verification is expected to be achieved through the following:

Verif. Method	Verif. By	Plan	Notes/Comments
I	ENG	Review design to verify that steam ejector steam supply lines systems include provisions to prevent backflow upon loss of steam supply pressure.	
D	SU/COM	Demonstrate the capability to use air to purge steam lines for the HDH steam ejectors.	

3.6.2.3 Decontamination Vessel Coil Pressure

Requirement: Fluid flows through the decontamination vessel heating/cooling coils shall be maintained at a higher static pressure than the contents of the vessel. [Section 6.4, BOD, ROIN: 1-40506][Section 7.1, ORD, ROIN: 9-36]

Basis Discussion: The relative pressures are a means to prevent migration of potentially contaminated fluids from the decontamination vessels into the decontamination vessel coils. This pressure difference is present whenever there are fluids held in the vessel and is maintained when switching from heating to cooling. [ALARA]

Verification: Verification is expected to be achieved through the following:

Verif. Method	Verif. By	Plan	Notes/Comments
I	ENG	Review HDH vessel heating/cooling system design to verify the system is capable of maintaining higher fluid static pressure in the heating/cooling coils relative to the vessel contents.	Document in an evaluation/assessment.
D	SU/COM	Demonstrate the HDH vessel heating/cooling system maintains higher fluid static pressure in the vessel heating/cooling coils relative to the vessel contents.	

3.6.2.4 Steam Ejectors Piping

Requirement: The HDH neutralization vessel and decontamination vessels steam ejector piping shall be constructed of 2 inch schedule 40S pipe. [Appendix 4.B.1.4, 4.B.4.6, PDSA – HLW Facility, ROIN: 45-8520, ROIN: 45-8562](B.2, B.3)

Basis Discussion: The steam ejectors lines in HDH-VSL-00002/-00004 are 2-inch schedule 40S. Per calculation 24590-QL-HC4-W000-00067-02-00001, *Hanford WTP Hydrogen Bubble in Full Pipe*, and as demonstrated in the PRC-DDT calculation, a 2-inch schedule 40S pipe at 1 atm does not fail elastically given a detonation (Section 4B.4.6, PDSA – HLW Facility). Refer to 24590-QL-HC4-W000-00067-02-00020, *Calculation – DDT Near Closed End Parametric Analysis*.

Verification: Verification is expected to be achieved through:

Verif. Method	Verif. By	Plan	Notes/Comments
I	ENG	Review the neutralization vessel and decontamination vessels steam ejector piping design to verify usage of 2 inch schedule 40S piping.	

3.6.3 System Interface Requirements

3.6.3.1 HLW Facility PWD and DIW - Pipe Flushing Interfaces

Requirement: The piping design shall interface with the following systems to provide flushing capabilities: [Section 14.3, ORD, ROIN: 1-40066]

- **Transfer lines from canister rinse vessel to neutralization vessel**
  - Flush water source: PWD system
- **Transfer lines from decontamination vessels to neutralization vessel**
  - Flush water source: DIW system
- **Transfer lines from neutralization vessel to the RLD System**
  - Flush water source: PWD system

Basis Discussion: The transfer lines are flushed to remove waste from the lines to prevent plugging and the accumulation of waste that could generate hydrogen. The HDH vessels are filled with the DIW or PWD system and the HDH pumps or steam ejectors are used to flush the piping.
[ALARA]

Verification: Verification is expected to be achieved through the following:

Verif. Method	Verif. By	Plan	Notes/Comments
I	ENG	Review of design to verify flushing capabilities on all transfer lines.	Document in an evaluation/assessment.
D	SU/COM	Demonstrate flushing capability on all transfer lines.	

3.6.4 Other Technical, Specialty, Operations and Maintenance Requirements

3.6.4.1 Flushing, Draining, and Slopes

Requirement: The piping design shall provide the capability to be flushed and drained with no traps or pockets that can accumulate liquids or solids that are not drained. [Sections 7.1, 14.2, 14.3, 20.0, ORD, ROIN: 1-40064, ROIN: 1-40065, ROIN: 8-4690A, ROIN: 8-3933, ROIN: 1-39953, ROIN: 1-40117]

Basis Discussion: The piping provisions for draining and/or pumping fluid prevents lines from plugging and minimizes contamination levels during equipment maintenance and/or replacement, in support of ALARA design objectives. If necessary, include provisions for breaking a vacuum to ensure piping drains freely.
[ALARA]

For additional details on pipe sloping, refer to 24590-WTP-GPG-M-027, *Recommended Slopes for Piping Systems*, and 24590-WTP-M6-50-00008, *P&ID Symbols and Legend Sheet 8 of 8*. Level piping is acceptable for a short distance (i.e., through wall penetrations, at connections to equipment, and at jumpers) (Section 14.3, ORD). In-cell instrument air lines connected using flexible jumpers are not considered process piping and are not required to be sloped (Section 7.1, ORD).

Verification: Verification is expected to be achieved through:

Verif. Method	Verif. By	Plan	Notes/Comments
I	ENG	Review the piping design (i.e., piping and instrumentation diagrams [P&ID]) to verify flushing capabilities and that the piping is designed to drain with no traps or pockets.	Document in an evaluation/assessment.

3.6.4.2 Heating Water

Requirement: The HDH piping design shall provide the capability to heat and pump water through the decontamination vessel coils. (C.1, M.1.7, M.1.8)

Basis Discussion: None.

Verification: Verification is expected to be achieved through:

Verif. Method	Verif. By	Plan	Notes/Comments
A	ENG	Perform an analysis to document the required temperatures and flow rates of the heated water.	
I	ENG	Review the HDH design to verify conformance to the analysis.	Document in an evaluation/assessment.
T	SU/COM	Perform system test to confirm the HDH system has the capability to heat and control the temperature in the decontamination vessels in the required operating range.	

3.6.4.3 Water Hammer

Requirement: HDH automatic valve closure rates shall be sufficiently slow to prevent damage from water hammer. [Section 14.4, ORD, ROIN: 8-7759]

Basis Discussion: The HDH design considers water hammer in the design of automatic valve closure devices. The devices control the rate of valve closure to prevent damage to the piping systems from water hammer.

Verification: Verification is expected to be achieved through:

Verif. Method	Verif. By	Plan	Notes/Comments
A	ENG	Perform an analysis to define valve actuator performance criteria to prevent water hammer during valve closure.	
T	SUP	Test fabricated valves to verify their closure rate meets the specified performance criteria for preventing water hammer.	
D	SU/COM	Demonstrate that valve closure rates to do not produce water hammer.	

3.7 Crane Requirements

3.7.1 Mission and Functional / Performance Requirements (Including States/Modes)

3.7.1.1 Codes and Standards

Requirement: **[HOLD]** In-cell bridge cranes shall be designed per CMAA 70-2000 and ASME-NOG-1 as applicable. [Section 11.8.1, BOD, ROIN: 8-8061][Safety Criterion 4.1-2, SRD, ROIN: 1-38651]

Basis Discussion: In-cell bridge cranes are be designed per CMAA 70, unless a safety function that can be addressed by ASME NOG-1 is identified during the control selection process. In that case, applicable sections of ASME-NOG-1 are applied as necessary (Section 11.8.1, BOD). This requirement is on HOLD until the resolution of CR 24590-WTP-GCA-MGT-15-00137.
[ATS 15-0075]

Verification: Verification is expected to be achieved through:

Verif. Method	Verif. By	Plan	Notes/Comments
I	ENG	Review of supplier designs of HDH cranes to verify adherence to applicable codes and standards.	Document in an evaluation/assessment.

3.7.1.2 Lifting Capacity

Requirement: System HDH cranes shall be designed with sufficient capacity to lift the following items, in conjunction with applicable lifting beams or apparatus: [Section 11.8.3.1, BOD, ROIN: 2-43145]

- Decontamination Cave Crane (HDH-CRN-00005)
  - Filled IHLW canister, with canister grapple and load cell
  - Filled IHLW canister, with canister recovery tool
  - Canister decontamination cave import hatch
  - Canister decontamination cave export hatch
  - MSM slave arm, with slave arm removal tool
- Crane Maintenance Area Jib Cranes (HDH-CRN-00006, -00007)
  - Decontamination cave crane component modules
  - CMA floor plugs
  - Storage cave crane cable reel components
- Canister Rinse Bogie Maintenance Area Jib Cranes (HDH-CRN-00002, -00004)
  - Canister rinse bogie modules
  - Canister rinse bogie vessel components
  - Canister rinse bogie recovery components

Basis Discussion: Cranes are designed with sufficient capacity to complete the heaviest anticipated lift to support operations, maintenance and repair activities over the life of the facility.

Verification: Verification is expected to be achieved through:

Verif. Method	Verif. By	Plan	Notes/Comments
A	ENG	Perform analysis to determine heaviest required lift for each crane.	
I	ENG	Review of crane design to verify crane capacity meets or exceeds the heaviest required lift.	Recommended to include in factory acceptance tests. Document in an evaluation/assessment.

3.7.1.3 Process Crane Interference

Requirement: Maintenance cranes shall be designed and installed such that there is no interference with normal operations of the process cranes. [Section 14.16, ORD, ROIN: 8-471][Section 11.8.3.1, BOD, ROIN: 2-43149]

Basis Discussion: This applies to all HDH maintenance cranes: HDH-CRN-00002, -00004, -00006, and -00007.

Verification: Verification is expected to be achieved through:

Verif. Method	Verif. By	Plan	Notes/Comments
I	ENG	Review design to verify maintenance cranes do not interfere with normal process crane operation.	Document in an evaluation/assessment.

3.7.1.4 Crane Recovery

Requirement: The design shall provide the capability to remotely recover the decontamination crane to a maintenance area. [Sections 11.3.2, 11.3.2.2, 11.4.1, 11.8.3.1, BOD, ROIN: 1-41132, ROIN: 1-41133, ROIN: 1-41134, ROIN: 1-41136, ROIN: 1-41151, ROIN: 2-43150, ROIN: 2-43151, ROIN: 1-41215][Sections 9.1, 14.1, 14.16, ORD, ROIN: 8-4350, ROIN: 8-3584, 8-472, ROIN: 8-481](J.1.3, N.1.4)

Basis Discussion: None.
[ALARA]

Verification: Verification is expected to be achieved through:

Verif. Method	Verif. By	Plan	Notes/Comments
I	ENG	Review design to verify capability to recover the decontamination crane to the maintenance area.	
D	SU/COM	Demonstrate crane recovery in accordance with 24590-WTP-PL-RACT-RT-0001, *WTP Remotability Verification Plan.*	

3.7.2 Nuclear Safety, ALARA, Environmental, and Other Regulatory Requirements

3.7.2.1 ALARA Inspection Area

Requirement: Access areas that meet ALARA criteria and are equipped with fixed ladders or stair access and catwalks or platforms shall be provided in the crane maintenance area to enable inspection and maintenance, without unsafe interferences, of all critical crane components. [Sections 9.1, 14.16, ORD, ROIN: 8-8074, ROIN: 8-494, ROIN: 8-485][Section 11.8.3.1, BOD, ROIN: 2-43150]

Basis Discussion: Platforms and catwalks are provided in the crane maintenance area to inspect and perform maintenance operations on the HDH cranes.
[ALARA]

Verification: Verification is expected to be achieved through:

Verif. Method	Verif. By	Plan	Notes/Comments
I	ENG	Review the crane inspection area to verify provisions are included to enable inspection and maintenance, without unsafe interferences, of all critical crane components in an area that is ALARA.	Document in an evaluation/assessment. Radiological and Plant engineering to participate in and/or review the evaluation/assessment.

3.7.3 System Interface Requirements

None.

3.7.4 Other Technical, Specialty, Operations and Maintenance Requirements

3.7.4.1 Crane Brakes

Requirement: Brakes on hoists and all cranes' drive functions shall automatically set when power is off. [Section 14.16, ORD, ROIN: 8-478][Section 11.8.3.1, BOD, ROIN: 2-43153]

Basis Discussion: To prevent the cranes from travelling along the tracks and the hoist from raising or lowering when not in operation, the brakes on all drive functions automatically set when the power is off.

Verification: Verification is expected to be achieved through:

Verif. Method	Verif. By	Plan	Notes/Comments
I	ENG	Review design to verify brakes automatically set when crane power is off.	Recommend to include in factory acceptance tests.
D	SU/COM	Demonstrate that crane brakes automatically set when crane power is off.	

3.7.4.2 Crane Lighting

Requirement: Lights shall be mounted on the decontamination crane to illuminate the working area below. [Section 14.16, ORD, ROIN: 8-479][Sections 8.6.1.1, 8.6.1.3, 11.8.3.1, BOD, ROIN: 1-40822, ROIN: 1-40829, ROIN: 2-43153]

Basis Discussion: Adequate lighting for in-cave (C3, C5) and other operations areas complies with the requirements of Illuminating Engineering Society of North America (IESNA) Standard RP-7.

Verification: Verification is expected to be achieved through:

Verif. Method	Verif. By	Plan	Notes/Comments
I	ENG	Review design documentation to verify lights are mounted on the decontamination crane to illuminate the area below the crane.	
T	SU/COM	Measure illumination levels below the decontamination crane to verify that combined crane/facility lighting complies with IESNA Standard RP-7.	

3.7.4.3 Lubrication Systems

Requirement: Cranes shall include accessible lubrication systems for ease of maintenance. [Section 14.16, ORD, ROIN: 8-486][Section 11.8.3.1, BOD, ROIN: 2-43153]

Basis Discussion: To provide access for maintenance, the lubrication systems on the cranes are accessible to personnel through use of permanently installed catwalks and work platforms, without disassembly of equipment. [ALARA]

Verification: Verification is expected to be achieved through:

Verif. Method	Verif. By	Plan	Notes/Comments
I	ENG	Review crane design to verify incorporation for accessible lubrication systems.	

3.7.4.4 Quick Connectors

Requirement: The HDH crane modules shall have quick connectors on flying leads to allow rapid reconnection of cabling or other services. [Section 14.16, ORD, ROIN: 8-469][Section 11.8.3.1, BOD, ROIN: 2-43147]

Basis Discussion: None.
[ALARA]

Verification: Verification is expected to be achieved through:

Verif. Method	Verif. By	Plan	Notes/Comments
I	ENG	Review crane design to verify incorporation of quick connectors.	

3.7.4.5 Limited Automation

Requirement: The HDH decontamination crane shall be designed for control by manual mode at the facility control room or at operator control stations at the cave face, through the MHJ, with no automated programming. [Sections 14.1, 14.16, ORD, ROIN: 8-3586, ROIN: 8-487][Sections 7.3.5.2, 7.3.5.3, BOD, ROIN: 1-40655, ROIN: 1-40658]

Basis Discussion: The HDH decontamination crane is non-automated mechanical handling equipment that can only be operated in manual or local mode.

Verification: Verification is expected to be achieved through:

Verif. Method	Verif. By	Plan	Notes/Comments
I	ENG	Review HDH decontamination crane design to verify the decontamination crane can only operate in manual or local mode, with no automated operations.	

3.7.4.6 Modular Crane Components

Requirement: The HDH cranes, hoists, and crane cable reels shall include modular, separable components for ease of maintenance/replacement. This consists of the following: [Section 11.8.3.1, BOD, ROIN: 2-43147][Section 14.16, ORD, ROIN: 1-40089, ROIN: 8-480]

- Wheel assemblies
- Hoist gear boxes, motors, and brakes
- Trolley gear boxes, motors, and brakes
- Bridge gear boxes, motors, and brakes
- Cable reel enclosure and cassette

Basis Discussion: Motors, gear reducers, and wheel bearings subject to failure are located and mounted such that they can be replaced by one or two personnel working from the bridge, trolley, scissors lift, or scaffolding using an overhead maintenance crane as necessary. This is to be done by minimizing shimming and alignment of motors and gear boxes.
[ALARA]

Verification: Verification is expected to be achieved through:

Verif. Method	Verif. By	Plan	Notes/Comments
I	ENG	Review the listed equipment's design to verify the use of modular components.	Document in an evaluation/assessment. Plant Design to participate in and/or review the evaluation/assessment.

3.7.4.7 Standardized Operator Controls

Requirement: The control units for the HDH cranes shall be standardized with the similar mechanical handling control units facility-wide. [Section 14.16, ORD, ROIN: 8-473]

Basis Discussion: Standardized operator controls are provided as much as possible to avoid errors that might occur when moving from one crane to another. Differences to accommodate specialized crane operations are acceptable.

Verification: Verification is expected to be achieved through:

Verif. Method	Verif. By	Plan	Notes/Comments
I	ENG	Review the design to verify standardized control units are provided for the HDH cranes.	Document in an evaluation/assessment.

3.7.4.8 Off-Board Logics

Requirement: The canister decontamination cave crane shall have no on-board logic, and all power and signal cables shall be marshalled off-board. [Section 14.16, ORD, ROIN: 8-470]

Basis Discussion: None.
[ALARA]

Verification: Verification is expected to be achieved through:

Verif. Method	Verif. By	Plan	Notes/Comments
I	ENG	Review canister decontamination cave crane design to verify power and signal signals are marshalled off the crane, and devices that execute crane control logic are located off the crane.	Document in an evaluation/assessment.

3.8 Grapples

Reference 24590-HLW-3ZD-HRH-00001, *HLW Canister Receipt Handling (HRH) System Design Description,* for general canister grapple design requirements, including WAI requirements applicable to the HDH canister grapples. Requirements specific to the HDH design are included in this section.

3.8.1 Mission and Functional / Performance Requirements (Including States/Modes)

3.8.1.1 Grapple Load Cell

Requirement: The grapple load cell shall be designed for a load of ≥ 4,500 kg (10,000 lb.) with an accuracy of ±1 % of full scale and a repeatability of ±1 % of full scale. [Key Attributes for Design Table, WAI Qualification Plan for Canister Grapple Load Cells, ROIN: 54-3915](A.12)

Basis Discussion: The grapple load cell is used to weigh the canister.

Verification: Verification is expected to be achieved through:

Verif. Method	Verif. By	Plan	Notes/Comments
I	ENG	Review of design to verify the grapple load is designed for a load of ≥ 4,500 kg (10,000 lb.) with an accuracy of ±1 % of full scale and a repeatability of ±1 % of full scale.	Ref. WAI Qualification Plan for Canister Grapple Load Cells

3.8.1.2 Grapple Load Cell Environment

Requirement: The grapple load cell shall be designed to operate between 50 °F to 113 °F, a humidity range from 5 % to 100 %, and a maximum gamma radiological dose rate of 1.0E+07 mrem/hr. [Key Attributes for Design Table, WAI Qualification Plan for Canister Grapple Load Cells, ROIN: 54-3916]

Basis Discussion: None.

Verification: Verification is expected to be achieved through:

Verif. Method	Verif. By	Plan	Notes/Comments
I	ENG	Review of design to verify the grapple load cell is designed to operate in the conditions listed above.	Ref. WAI Qualification Plan for Canister Grapple Load Cells

3.8.1.3 Grapple and Crane Interface

Requirement: The canister grapple lifting bail shall be compatible with a lifting hook on the canister decontamination cave crane. (A.1, A.1.1, A.3, A.4, A.6, A.9, A.13, A.13.1, A.14, A.15, F.1, F.1.1, F.1.2, F.1.3, G.1, G.1.1)

Basis Discussion: The lifting hook is an equipment interface with the canister decontamination cave crane hoist.

Verification: Verification is expected to be achieved through:

Verif. Method	Verif. By	Plan	Notes/Comments
I	ENG	Inspect design to verify the canister grapple lifting bail is compatible with the canister storage cave crane lifting hook.	
D	SU/COM	Demonstrate compatibility between the canister grapple lifting bail and the canister storage cave crane lifting hook.	

3.8.2 Nuclear Safety, ALARA, Environmental, and Other Regulatory Requirements

3.8.2.1 Separate Grapples

Requirement: The design shall provide the capability for using separate grapples for pre- and post-decontamination canister transfers. [Section 11.1.1, WTP HLW Canister, ROIN: 40-23905][Section 14.11, ORD, ROIN: 8-6577](A.6.1)

Basis Discussion: Separate grapples are used pre and post decontamination to control the spread of contamination.
[ALARA]

Verification: Verification is expected to be achieved through:

Verif. Method	Verif. By	Plan	Notes/Comments
I	ENG	Review of the design to verify capability for using separate grapples for pre- and post-decontamination transfers.	

3.8.3 System Interface Requirements

Refer to Section 3.11.4.2 for control interfaces.

3.8.4 Other Technical, Specialty, Operations and Maintenance Requirements

3.8.4.1 Grapple Recovery

Requirement: The HDH design shall include the capability to manually disengage the grapple from a canister using an in-cave MSM. Adequate operator viewing capability and a canister support/storage point shall be provided within the working range of the MSM. (N.1)

Basis Discussion: In the event that the grapple does not disengage from the canister, an in-cave MSM can be used to disengage the grapple from the canister. Viewing capability and a canister support point are available within reach of the MSM.
[ALARA]

Verification: Verification is expected to be achieved through:

Verif. Method	Verif. By	Plan	Notes/Comments
I	ENG	Review of the HDH design to verify capability to use MSM to manually disengage the grapple from the canister.	
D	SU/COM	Demonstrate the HDH systems capability to use a MSM to manually disengage the grapple from the canister.	

3.9 Swabbing, Canister Rack, and Glovebox Requirements

3.9.1 Mission and Functional / Performance Requirements (Including States/Modes)

3.9.1.1 Import and Export Swabs

Requirement: The swabbing equipment shall provide the capability to import and export swabs through the posting port. (E.1, E.2)

Basis Discussion: None.
[ALARA]

Verification: Verification is expected to be achieved through:

Verif. Method	Verif. By	Plan	Notes/Comments
I	ENG	Review the design to verify the capability to import and export swabs through the posting port.	
D	SU/COM	Demonstrate the swabbing systems capability to import and export swabs through the posting port.	

3.9.1.2 Swabbing Locations and Area

Requirement: The HDH swabbing equipment shall provide the capability to swab IHLW canister exterior surfaces in a predetermined, repeatable pattern that covers a minimum surface area of 300 cm^2, and provides a representative sample of surface contamination levels. The system shall provide the capability for an operator to visually verify that the swabbing equipment traces the representative swabbing pattern. [Section 4.3 (3.7), IHLW Waste Form Compliance Plan, ROIN: 2-20377, ROIN: 40-20804][Appendix A (line 152), (line 153), (line 155), WAI Items and Activities, ROIN: 45-1788, ROIN: 45-1789, ROIN: 45-1791][Sections 5.2.6, 5.2.7, 6.13.1.1, 6.13.1.2, *WTP HLW Canister Processing Activities*, ROIN: 40-23684, ROIN: 45-9199, ROIN: 40-23595, ROIN: 40-23596](A.8, A.10, A.10.1)

Basis Discussion: An analysis is to be performed to determine the locations to be swabbed to ensure that a representative sample of the canisters level of contamination is obtained. The system is capable of swabbing the canister locations specified in the analysis with visual verification of the proper swab locations by an operator. Canister swabbing, operator verification of correct areas swabbed, and the analysis to determine swabbing locations are WAI.
[ALARA]

Verification: Verification is expected to be achieved through:

Verif. Method	Verif. By	Plan	Notes/Comments
A	ENG	Perform an analysis to determine swabbing locations to obtain a representative sample of contamination levels.	This analysis is WAI.
I	ENG	Review the design to verify the capability to swab the locations specified in the analysis and the minimum area.	
D	SU/COM	Demonstrate the swabbing systems capability to swab the proper locations, minimum area, and capability for an operator to visually verify swabbing locations prior to hot commissioning.	This demonstration is WAI.
D	SU/COM	Demonstrate the swabbing systems capability to swab the proper locations, minimum area, and capability for an operator to visually verify swabbing locations during hot commissioning.	This demonstration is WAI. Performance may be concurrent with demonstration of requirement 3.5.3.4

3.9.1.3 Swabbing Applied Pressure

Requirement: The swabbing equipment shall provide the capability of a continuous swabbing force not to exceed 5 lbf and the capability to be verified by an operator. [Key Attributes for Design Table, WAI Qualification Plan for Swabbing Manipulator and Load Cell, ROIN: 54-3917][Section 6.13.1.2, *WTP HLW Canister Processing Activities*, ROIN: 45-9199][Appendix A (line 153), WAI Items and Activities, ROIN: 45-1789](A.8, A.10, A.10.1)

Basis Discussion: The applied pressure ensures the swab is adequately pressing into the canister to pick up any removable contamination without damaging the canister. An operator verifies constant pressure and contact on the canister by monitoring the manipulator-arm and load-cell pressure. (Section 6.13.1.2, *WTP HLW Canister Processing Activities*). Verification of swabbing force is WAI.

Verification: Verification is expected to be achieved through:

Verif. Method	Verif. By	Plan	Notes/Comments
I	ENG	Review of design to verify the swabbing equipment provides the capability of a continuous swabbing force that does not exceed 5 lbf and the capability to be verified by an operator.	Ref. WAI Qualification Plan for Swabbing Manipulator and Load Cell
D	SUP	Demonstrate the swabbing process' capability to monitor swabbing pressure and for an operator to verify the swabbing pressure.	This demonstration is WAI. Recommended to be included in factory acceptance testing.
D	SU/COM	Demonstrate the swabbing process' capability to monitor swabbing pressure and for an operator to verify the swabbing pressure during hot commissioning.	This demonstration is WAI.

3.9.1.4 Measuring Contamination Levels

Requirement: The HDH glovebox shall provide the capability to import and use portable instruments or probes within the glovebox, including those used to measure the contamination levels of swabs or components that have been brought into the glovebox. [Sections 6.13.1.4, 6.17, *WTP HLW Canister Processing Activities*, ROIN: 40-23687, ROIN: 45-9284][Appendix A (line 152), WAI Items and Activities, ROIN: 45-1788](E.3)

Basis Discussion: Preliminary or go/no-go contamination measurements may be taken inside the glovebox using small portable instruments.
[ALARA]

Verification: Verification is expected to be achieved through:

Verif. Method	Verif. By	Plan	Notes/Comments
I	ENG	Review the design to verify the capability to import and use portable instruments within the glovebox.	
D	SU/COM	Demonstrate the ability to import and use portable instruments within the glovebox including the ability to measure contamination levels on swabs.	

3.9.1.5 Failed Contamination Inspection

Requirement: The HDH design shall include the capability to return a canister to the decontamination vessel if contamination is detected in excess of limits. [Appendix A (line 155), WAI Items and Activities, ROIN: 45-1791][Section 1.1.2.6, *WTP HLW Canister Processing Activities*, ROIN: 40-23552](E.3, G.1)

Basis Discussion: Removable contamination on the external surfaces of the canister cannot exceed 3,670 Bq/m^2 (2,200 dpm/100 cm^2) for alpha and 36,700 Bq/m^2 (22,000 dpm/100 cm^2) for beta-gamma. (Section C.8.1.2.2.1.2(3), WTP Contract). If contamination levels are in excess of this limit, the canister is transferred back to the decontamination vessels. Demonstration of the canister transfer capabilities is verified in requirement 3.4.4.6.
[ALARA]

Verification: Verification is expected to be achieved through:

Verif. Method	Verif. By	Plan	Notes/Comments
I	ENG	Review the design to verify capability to transfer canister to a decontamination vessel from swabbing station.	

3.9.1.6 Swabbing Fixed Guides

Requirement: The swabbing turntable and canister rack shall have passive fixed guides to facilitate loading of the canister and all edges of the guides that come in contact with the canister shall have a minimum of a 1/32 in. radius or chamfer. [Key Attributes for Design Table, WAI Qualification Plan for Canister Swabbing, ROIN: 54-3910][Key Attributes for Design Table, WAI Qualification Plan for Canister Racks, ROIN: 54-3872, ROIN: 54-3873]

Basis Discussion: The guides direct the canister into position in the event that the canister centerline is not directly in line with the rack or swabbing turntable position. The canister rack provides > 1 in. of clearance all the way around a canister when it is located at the center of the canister position.

Verification: Verification is expected to be achieved through:

Verif. Method	Verif. By	Plan	Notes/Comments
I	ENG	Review of design to verify the swabbing turntable and canister rack have passive fixed guides that facilitate loading of the canister and all edges of the guides that come in contact with the canister have a minimum of 1/32 in. radius or chamfer.	Ref. WAI Qualification Plan for Canister Swabbing and WAI Qualification Plan for HLW Canister Racks

3.9.1.7 Guides Surface Finish

Requirement: The swabbing turntables passive fixed guides and surfaces of the canister rack that contact the canister shall have a surface finish of 63 µin. or better. [Key Attributes for Design Table, WAI Qualification Plan for Canister Swabbing, ROIN: 54-3911][Key Attributes for Design Table, WAI Qualification Plan for Canister Racks, ROIN: 54-3875]

Basis Discussion: None.

Verification: Verification is expected to be achieved through:

Verif. Method	Verif. By	Plan	Notes/Comments
I	ENG	Review of design to verify the swabbing turntables passive fixed guides and surfaces of the canister rack that contact the canister have a surface finish of 63 µin. or better.	Ref. WAI Qualification Plan for Canister Swabbing and WAI Qualification Plan for Canister Racks

3.9.1.8 Canister Rack Material

Requirement: **[HOLD]** All portions of the HDH canister storage rack that may have contact with a canister shall be constructed of an austenitic stainless steel. [Key Attributes for Design Table, WAI Qualification Plan for Canister Racks, ROIN: 54-3874]

Basis Discussion: This requirement is on hold due to a discrepancy between 24590-HLW-WIQP-MH-09-0002, *HLW Canister Racks,* 24590-HLW-WSF-ENG-07-003, *WTP HLW Canister Handling,* and 24590-HLW-RPT-PR-01-001, *Waste Acceptance Impacting Items and Activities.* The requirement for material compatibility with a canister external surface has been removed in the WAI Items and Activities document, and Canister Rack WSF, but not the Canister Rack WIQP. See CCN 192495 for more information.
[ATS 15-0076]

Verification: Verification is expected to be achieved through:

Verif. Method	Verif. By	Plan	Notes/Comments
I	ENG	Review of design to verify all portions of the HDH canister storage rack that may contact a canister are constructed of an austenitic stainless steel.	Ref. WAI Qualification Plan for Canister Racks

3.9.1.9 Swabbing Load Cell Environment

Requirement: The swabbing load cell shall be suitable for an environment between 59 °F and 95 °F, relative humidity of 5 %, and a radiological dose of 1.00E+07 mrad/hr. [Key Attributes for Design Table, WAI Qualification Plan for Swabbing Manipulator and Load Cell, ROIN: 54-3918]

Basis Discussion: The swabbing load cell operates in the decontamination caves environment.

Verification: Verification is expected to be achieved through:

Verif. Method	Verif. By	Plan	Notes/Comments
I	ENG	Review of design to verify the swabbing load cell is suitable for the listed operating conditions.	Ref. WAI Qualification Plan for Swabbing Manipulator and Load Cell

3.9.2 Nuclear Safety, ALARA, Environmental, and Other Regulatory Requirements

3.9.2.1 Glovebox Air Inlet Design

Requirement: The air inlet to the glovebox shall be designed to preclude release of contamination to the surrounding room in the event of a loss of negative pressure or a pressure reversal in the glovebox. [Section 5.1.2, BOD, ROIN: 1-40438]

Basis Discussion: Air is drawn through the glovebox and into the decontamination cave, by the facility ventilation system. The glovebox may contain an air inlet to regulate this air flow to maintain a negative pressure in the glovebox, relative to the room in which it resides. This air inlet is designed to preclude a release of contamination to the surrounding room in the event of a loss of negative pressure or a pressure reversal in the glovebox.
[ALARA]

Verification: Verification is expected to be achieved through:

Verif. Method	Verif. By	Plan	Notes/Comments
I	ENG	Review the design to verify feature(s) are provided to preclude release of contamination to surrounding room on loss of negative pressure or pressure reversal.	Document in an evaluation/assessment.

3.9.3 System Interface Requirements

None

3.9.4 Other Technical, Specialty, Operations and Maintenance Requirements

3.9.4.1 Visual Inspection

Requirement: The HDH system shall include the capability to visually inspect the canisters—either by direct observation through shield windows and mirrors, or observation using a television camera—to ensure no waste glass is adhering to the canister and to read the canister identification number. [Appendix A (line 156), WAI Items and Activities, ROIN: 45-1792][Section 3.0, WTP HLW Canister, ROIN: 45-9315](A.7, F.1)

Basis Discussion: Glass may have adhered to the canister exterior during the pouring process that is not removed during decontamination. If glass is found, the canister is transferred to the HPH system for glass removal. Refer to requirement 3.4.4.6 for canister transfer. Visual inspection for glass and reading the canister identification number are WAI.

Verification: Verification is expected to be achieved through:

Verif. Method	Verif. By	Plan	Notes/Comments
I	ENG	Review of design to verify the capability to perform visual inspection of IHLW canisters.	
D	SU/COM	Demonstrate the capability to perform visual inspections for adhered glass on the IHLW canisters after decontamination including the capability to read the canister identification number during visual inspection.	This demonstration is WAI.

3.9.4.2 Glovebox Pressure

Requirement: The glovebox (in conjunction with normal operation of the facility ventilation systems) shall be capable of maintaining a negative pressure relative to its room location. [Section 14.15, ORD, ROIN: 40-9971][Safety Criterion 4.2-1, SRD, ROIN: 1-38663][Section 5.1.2, BOD, ROIN: 1-40438]

Basis Discussion: Air is drawn through the glovebox and into the decontamination cave, by the facility ventilation system. The glovebox regulates air flow to maintain a negative pressure relative to the room in which it resides, including while the glovebox airlock and posting port out-cave doors are open.
[ALARA]

Verification: Verification is expected to be achieved through:

Verif. Method	Verif. By	Plan	Notes/Comments
I	ENG	Review the design to verify the ability to maintain a negative internal pressure, relative to the surrounding room, through regulation of ventilation air flowing through the glovebox and into the cell or cave.	
T	SU/COM	Verify that, in conjunction with normal operation of the facility ventilation systems, the glovebox can maintain a negative pressure relative to the room it resides in.	

3.9.4.3 Glovebox Pressure Indication

Requirement: Differential pressure indication shall be mounted to the glovebox to provide indication of the glovebox internal pressure relative to the room in which it resides. [Section 14.15, ORD, ROIN: 40-9971]

Basis Discussion: Air is drawn through the glovebox and into the adjacent cave or cell, by the facility ventilation system. The glovebox regulates air flow to maintain a negative pressure relative to the room in which it resides. [ALARA]

Verification: Verification is expected to be achieved through:

Verif. Method	Verif. By	Plan	Notes/Comments
I	ENG	Review the design to verify provision of differential pressure indication.	

3.9.4.4 Glovebox Construction

Requirement: There shall be no sharp edges within the HDH glovebox. [Section 14.15, ORD, ROIN: 40-9968]

Basis discussion: Removing sharp edges inside the glovebox reduces the chances of ripping a glove. [ALARA]

Verification: Verification is expected to be achieved through:

Verif. Method	Verif. By	Plan	Notes/Comments
I	ENG	Review the design of the glovebox to verify that the glovebox interior does not contain any sharp edges.	Document in an evaluation/assessment.

3.9.4.5 Glovebox Maintainable Items

Requirement: All of the gloveboxes maintainable items shall be accessible. [Section 14.15, ORD, ROIN: 40-9966]

Basis discussion: All maintainable items on the glovebox are accessible. This includes items inside of the glovebox.

Verification: Verification is expected to be achieved through:

Verif. Method	Verif. By	Plan	Notes/Comments
I	ENG	Review the glovebox design to verify access to all maintainable items.	

3.9.4.6 Glovebox Materials

Requirement: The use of braided metal hosing, glass, or plastic in the HDH glovebox shall not be used unless supported with suitable justification. [Section 14.15, ORD, ROIN: 40-9969]

Basis discussion: Usage of these materials increases the chance of puncturing a glove, so they are only used when justified.

Verification: Verification is expected to be achieved through:

Verif. Method	Verif. By	Plan	Notes/Comments
I	ENG	Review the HDH glovebox design to verify braided metal hosing, glass, or plastic is not used or has suitable justification for its usage.	

3.9.4.7 Operator Design

Requirement: The HDH glovebox shall be designed and positioned for typical operator size and strength. [Section 14.15, ORD, ROIN: 40-9967]

Basis discussion: The glovebox is designed and positioned such that a typical operator can perform the required operations and reach all required equipment inside the glovebox. Design in accordance with human factors provisions of AGS-G001, Guideline for Gloveboxes, meets the requirement to design for a "typical" operator.

Verification: Verification is expected to be achieved through:

Verif. Method	Verif. By	Plan	Notes/Comments
I	ENG	Inspect the design to verify glove ports allow an operator of typical size and strength to perform all required operations within the limited space of the glovebox.	Document in an evaluation/assessment.

3.9.4.8 Glovebox Fire Protection

Requirement: **[HOLD]** The HDH glovebox shall be provided with an automatic sprinkler system in the posting port and the glovebox. [Section 4.1.11, PFHA, ROIN: 40-28701](P.1)

Basis Discussion: The gloveboxes are designed in accordance with DOE-STD-1066-97, Section 15, and National Fire Protection Association (NFPA) 801, as tailored in Appendix C of the SRD, which require the gloveboxes to have automatic sprinklers and the means for draining. The PFHA-HLW indicates that automatic sprinkler protection is provided in the posting port and the glovebox, however the corrective action for 24590-WTP-PIER-MGT-14-1322 questions the validity of—includes evaluating the validity of—the description in the PFHA-HLW

for installation of sprinklers in gloveboxes and posting ports. As the PFHA-HLW is the source document for this requirement, this requirement is on "HOLD" for resolution of 24590-WTP-PIER-MGT-14-1322. [ATS 15-0078]

Verification: Verification is expected to be achieved through the following:

Verif. Method	Verif. By	Plan	Notes/Comments
I	ENG	Review of design to verify provision of an automatic sprinkler system in the HDH glovebox.	Document in an evaluation/assessment.

3.9.4.9 Glovebox Power Supply

Requirement: **[HOLD]** Posting Port Safety instrumentation shall utilize a separate power supply from Non-Safety instrumentation. [Section 9.5.4, 9.10, BOD, ROIN: 8-11599, ROIN: 1-41025]

Basis Discussion: This requirement is on "HOLD" due to differences in functional classification between the PDSA (SS) and the SDS (Non-Safety). [ATS 15-0229]

Verification: Verification is expected to be achieved through the following:

Verif. Method	Verif. By	Plan	Notes/Comments
I	ENG	Review the design to verify posting port Safety and Non-Safety instrumentation connect to separate power supplies.	Documented in an evaluation/assessment

3.9.4.10 Glovebox Ember Screens

Requirement: Gloveboxes shall be provided with ember screens. [Section 4.1.10, PFHA-HLW, ROIN: 40-28701](P.1)

Basis Discussion: None.

Verification: Verification is expected to be achieved through the following:

Verif. Method	Verif. By	Plan	Notes/Comments
I	ENG	Review of design to verify provision of ember screens in the HFH glovebox.	Documented in an evaluation/assessment.

3.10 Shield Hatches and Shield Doors

3.10.1 Mission and Functional / Performance Requirements (Including States/Modes)

3.10.1.1 Engineered Air Gap

Requirement: The HDH shield doors (HDH-DOOR-00001 and -00002) and hatches (HDH-HTCH-00002, -00003, and -00004) shall provide an engineered air gap which, in conjunction with the facility ventilation system, maintains an air cascade with a minimum perimeter air flow velocity of 200 feet per minute. [Section 7.1, ORD,

ROIN: 8-489][Sections 5.1.2, 11.8.3.1, 12.3.2, BOD, ROIN: 1-40438, ROIN: 1-40441, ROIN: 2-43160, ROIN: 8-15078][Section 4.4.1, 4.4.1.1, 4.4.1.4, PDSA – HLW Facility, ROIN: 2-46201, ROIN: 1-21615A, ROIN: 1-21619][Safety Criterion 4.2-1, SRD, ROIN: 1-38663]

Basis Discussion: An engineered air gap helps to control the spread of contamination and to maintain the cascading airflow from areas of low contamination to areas of higher contamination. [ALARA]

Verification: Verification is expected to be achieved through:

Verif. Method	Verif. By	Plan	Notes/Comments
A	ENG	Perform analysis to verify that the minimum 200 feet/minute air flow velocity around shield door perimeters is met.	
I	SUP/ENG	Review the door/hatch design to verify conformance to engineered air gap requirements analysis.	May be documented in Factory Acceptance Test Report.
I	CON	Inspect installation design to verify conformance to engineered air gap requirements	

3.10.1.2 Hatch Liners

Requirement: The innermost portion of the HDH hatch liners shall be constructed of stainless steel, be free of burrs, fins, and other harmful surface conditions. Sharp welds and corners shall be ground smooth and blended into the base material. [Section 14.12, ORD, ROIN: 43-1599]

Basis Discussion: The HDH hatch liners protect the hatch and protect canisters from damage. The innermost layer of the liner is the portion that may come in contact with the canister is constructed of stainless steel to prevent chlorides from being transferred to the canister.

Verification: Verification is expected to be achieved through:

Verif. Method	Verif. By	Plan	Notes/Comments
I	ENG	Review of hatch design to verify incorporation of stainless steel liners.	
I	CON	Inspect the hatch liners for smoothly ground welds and removal of burrs, fins, and harmful surface finishes.	

3.10.2 Nuclear Safety, ALARA, Environmental, and Other Regulatory Requirements

3.10.2.1 Replaceable Seals

Requirement: The HDH SPADs shall have replaceable seals. [Sections 4.3.1.2, 4.3.9.3, PDSA – HLW Facility, ROIN: 1-21509, ROIN: 40-11535].

Basis Discussion: The SPADs maintain confinement of the C5V boundary by ensuring, when the doors are closed, they seal to restrict air from leaking out of the airlocks. The seals on SPADs may wear out and will be replaceable. The HDH SPADs are HDH-DOOR-00003, -00004, -00005, and -00006.
[ALARA]

Verification: Verification is expected to be achieved through:

Verif. Method	Verif. By	Plan	Notes/Comments
I	ENG	Review the design to verify incorporation of replaceable seals.	

3.10.2.2 Physical Locking Devices

Requirement: The HDH maintenance area shield doors, SPADs, and hatches shall include provisions for physical locks to be applied to electrical power sources, controls, or mechanical locking devices. [Section 4.4.22, PDSA – HLW Facility, ROIN: 2-41352, ROIN: 2-41353][Section 11.8.3.1, BOD, ROIN: 2-43161, ROIN: 2-43164]

- HDH shield doors: HDH-DOOR-00001, -00002, -00003, -00004, -00005, -00006
- HDH hatches: HDH-HTCH-00002, -00003, -00004

Basis Discussion: Locks provide a physical barrier to prevent unauthorized or inadvertent entry into areas of potential high radiation source. The lock can be applied to either an electrical and/or mechanical isolation point. Padlocks and hasps are inappropriate for equipment shield doors.
[ALARA]

Verification: Verification is expected to be achieved through:

Verif. Method	Verif. By	Plan	Notes/Comments
I	ENG	Review the design to verify incorporation of physical locking devices, power/control locks, or blocking devices.	Document in an evaluation/assessment. Plant Engineering to participate in and/or review the evaluation/assessment.

3.10.2.3 Shielding

Requirement: The HDH shield doors , hatches, and through-wall devices that fill or cover a penetration through a shield wall shall provide adequate radiation shielding (including guide systems or shield blocks) to reduce personnel exposure to levels acceptable within the Radiation Protection Program. [Sections 4.4.1, 4.4.1.2, 4.4.1.3, PDSA - HLW Facility, ROIN: 1-21614, ROIN: 1-21617A, ROIN: 14-5978][Section 11.8.3.1, BOD, ROIN: 2-43160]

- HDH Doors: HDH-DOOR-00001, -00002, -00003, -000004, -00005, -00006
- HDH Hatches: HDH-HTCH-00002, -00003, -00004
- Through Wall Drives: HDH-DRIV-00001, -00002, -00003, -00004, -00005, -00007, -00008

- MSMs: HDH-MANIP-00002, -00003, -00004
- Plugs: HDH-PLUG-00001
- Through Wall Devices: HDH-TWDVC-00002, -00008

Basis Discussion: None.
[ALARA]

Verification: Verification is expected to be achieved through:

Verif. Method	Verif. By	Plan	Notes/Comments
I	ENG	Review design to verify shield doors, hatches, and through-wall devices conform with applicable shielding calculations and shine path analyses.	Document in an evaluation/assessment. Rad Engineering to participate in and/or review the evaluation/assessment.

3.10.2.4 Shielded Personnel Access Door Sealing

Requirement: **[HOLD]** The HDH SPADs shall fully seal against their mating surface to maintain the C5V boundary. [Sections 4.3.9, 4.3.9.1, 4.3.9.2, 4.3.9.3, 5.6.12, PDSA – HLW Facility, ROIN: 40-11525, ROIN: 40-11526, ROIN: 40-11532, ROIN: 40-11539D, ROIN: 40-11534]

Basis Discussion: The SPADs maintain the C5V boundary by ensuring, when the doors are closed, they fully seal to restrict air from leaking out of the airlocks. The HDH SPADs are HDH-DOOR-00003, -00004, -00005, and -00006. This requirement is on "HOLD" due to discrepancies within the PDSA-HLW Facility. Condition report (CR) 24590-WTP-PIER-MGT-14-0914 documents the conflicting requirements for an engineered air-gap and a fully seated seal between mating surfaces for the shield doors.
[ALARA]
[ATS 15-0077]

Verification: Verification is expected to be achieved through:

Verif. Method	Verif. By	Plan	Notes/Comments
I	ENG	Review of SPAD design to verify fully sealing surfaces around the aperture perimeter.	
T	SU/COM	Test the SPAD installation for full sealing around the aperture perimeter.	

3.10.2.5 Withstand Impacts

Requirement: Maintenance area shield doors (HDH-DOOR-00001 and -00002) shall withstand impacts from loaded cranes or bogies without catastrophically failing or creating a direct shine path into a maintenance area. [Section 5.6.12, PDSA - HLW Facility, ROIN: 40-11539B]

Basis Discussion: The maintenance area doors may have personnel working on equipment in the maintenance area. Should a door fail catastrophically, a radiological shine path may expose workers to high doses of radiation. These doors can withstand an impact from loaded cranes and bogies to prevent radiological exposure to workers. [ALARA]

Verification: Verification is expected to be achieved through:

Verif. Method	Verif. By	Plan	Notes/Comments
A	ENG/SUP	Determine impact loads imposed on affected shield doors by loaded cranes or bogies.	
I	ENG	Review door design to verify affected doors are able to withstand crane or bogie impacts without catastrophic failure or creating a direct shine path into the maintenance area.	

3.10.3 System Interface Requirements

None

3.10.4 Other Technical, Specialty, Operations and Maintenance Requirements

3.10.4.1 Mounting

Requirement: The structural mounting components of the shield doors and shield hatches shall be designed in accordance with DOE-STD-1020-94, ANSI/AISC N690, and AISC M016, as applicable. [Safety Criterion 4.1-3, SRD, ROIN: 1-38653]

Basis Discussion: Typically, ANSI/AISC N690 applies to SC-I and II equipment, while AISC M016 applies to SC-III and IV equipment. DOE-STD-1020-94 is generally applicable to these SSCs.

Verification: Verification is expected to be achieved through:

Verif. Method	Verif. By	Plan	Notes/Comments
I	ENG	Review the design to verify structural analysis conforms with DOE-STD-1020-94, ANSI/AISC N690, and AISC M016, as applicable, and that the design conforms with the analysis.	

3.10.4.2 Shield Hatch and Decontamination Vessel Lid Recovery

Requirement: The HDH system shall provide the capability to open and close the HDH shield hatches and the decontamination vessel lids without use of the respective equipment's motor. (N.1.5)

Basis Discussion: The HDH shield hatches through wall drive can be disconnected and a hand wheel can be used to manually open or close the shield hatches. The decontamination vessel lids can be opened or closed by either disconnecting the through wall drive and manually operating the drive with a hand wheel, or through use of an in-cave MSM.
[ALARA]

Verification: Verification is expected to be achieved through:

Verif. Method	Verif. By	Plan	Notes/Comments
I	ENG	Review the design to verify the capability to open and close the shield hatches and decontamination vessel lids without use of the respective equipment's motor.	
D	SU/COM	Demonstrate the capability to open and close the HDH hatches and vessel lids without the equipment's respective motor, in accordance with 24590-WTP-PL-RACT-RT-0001, *WTP Remotability Verification Plan.*	

3.10.4.3 Shield Door Recovery

Requirement: The HDH maintenance area shield doors (HDH-DOOR-00001 and -00002) shall be capable of being remotely recovered (pulled/lowered into the closed position without manned entry into the cave) using the remote recovery system. [Section 11.8.3.1, BOD, ROIN: 2-43162](N.1.6)

Basis Discussion: None.
[ALARA]

Verification: Verification is expected to be achieved through:

Verif. Method	Verif. By	Plan	Notes/Comments
I	ENG	Inspect the maintenance area shield door design to verify the ability to be remotely recovered via the door remote recovery system.	
D	SU/COM	Demonstrate shield door recovery capability in accordance with 24590-WTP-PL-RACT-RT-0001, *WTP Remotability Verification Plan.*	

3.10.4.4 Shield Door Ease of Decontamination

Requirement: Shield doors shall be designed for ease of decontamination. [Section 7.1, ORD, ROIN: 8-488]

Basis discussion: Door decontamination is performed using the same methods/agents used on the surrounding room. This applies to all of the HDH shield doors, HDH-DOOR-00001, -00002, -00003, -00004, -00005, -00006.
[ALARA]

Verification: Verification is expected to be achieved through:

Verif. Method	Verif. By	Plan	Notes/Comments
I	ENG	Review shield door design to verify materials or coatings applied to shield door panels support ease of decontamination.	Document in an assessment or ALARA design review. Rad Engineering to participate.

3.10.4.5 Electrical Device Location

Requirement: Electrical or control devices shall be fitted adjacent to and not on shield door panels. [Section 11.8.3.1, BOD, ROIN: 2-43161]

Basis Discussion: None.

Verification: Verification is expected to be achieved through:

Verif. Method	Verif. By	Plan	Notes/Comments
I	ENG	Review the design to verify electrical and control devices are not located on the shield door panels.	

3.10.4.6 Fail in Place

Requirement: The maintenance area equipment shield doors (HDH-DOOR-00001 and HDH-DOOR-00002) shall fail safe by remaining in place on loss of power or control signals. [Sections 5.2, 14.16, ORD, ROIN: 1-39932, ROIN: 8-481][Section 11.4.1 BOD, ROIN: 1-41151, ROIN: 1-41152]

Basis Discussion: None.

Verification: Verification is expected to be achieved through:

Verif. Method	Verif. By	Plan	Notes/Comments
I	ENG	Review of design to verify doors remain in place on loss of power.	Document in an evaluation/assessment.
D	SUP/SU/ COM	Demonstrate doors remain in place on loss of power.	

3.11 Monitoring and Controls Requirements

3.11.1 Mission and Functional / Performance Requirements (Including States/Modes)

3.11.1.1 HDH System Vessels

3.11.1.1.1 Temperature

Requirement: The HDH vessels shall include temperature-sensing capability and interface with the PCJ system to remotely monitor the temperature of the vessel contents within each vessels normal operating range. (M.1.1, M.1.8)

Basis Discussion: Temperature monitoring provides the capability to ensure processing conditions are maintained at the operating temperature values. Temperature sensing is non-safety.

Verification: Verification is expected to be achieved through:

Verif. Method	Verif. By	Plan	Notes/Comments
A	ENG	Perform an analysis to document temperature monitoring requirements.	
I	ENG	Review of design to verify conformance to the analysis.	Document in an evaluation/assessment.

3.11.1.1.2 Pressure

Requirement: The HDH decontamination vessels and neutralization vessel shall interface with the PCJ to provide the capability to remotely monitor pressure within the vessels. (M.1.3)

Basis Discussion: Pressure monitoring is included in the vessel design to prevent over pressurization.

Verification: Verification is expected to be achieved through:

Verif. Method	Verif. By	Plan	Notes/Comments
I	ENG	Review of design to verify the interface capability to remotely monitor the vessel pressure.	

3.11.1.1.3 Level Detection

Requirement: The HDH vessels shall provide the capability to remotely measure vessel content level. [Section 14.10.1.1, BOD, ROIN: 1-41487, ROIN: 1-41488](M.1.2)

Basis Discussion: Vessel content level is monitored to prevent overflows and for timing of effluent transfers.

Verification: Verification is expected to be achieved through:

Verif. Method	Verif. By	Plan	Notes/Comments
I	ENG	Review of the design to verify the capability to remotely measure the HDH vessel content level.	

3.11.1.1.4 Sparger Flow Rate

Requirement: The HDH vessel sparger design shall include flow sensors and interface with the PCJ system to remotely monitor the sparger flow rate. (M.1.9)

Basis Discussion: The flow sensors ensure HDH vessels spargers are operational and ensure the proper mixing of decontamination fluids.

Verification: Verification is expected to be achieved through:

Verif. Method	Verif. By	Plan	Notes/Comments
I	ENG	Review of the design to verify the capability to remotely monitor sparger flow rate.	

3.11.2 Nuclear Safety, ALARA, Environmental, and Other Regulatory Requirements

3.11.2.1 Canister Swabbing and Monitoring Posting Port Door-to-Door Interlock

Requirement: The HDH posting port shall include Safety Significant interlocks to prevent both shield doors from being open at the same time. [Sections 3.3.5.1.13, 4.4.22.2, PDSA - HLW Facility, ROIN: 2-47745, ROIN: 45-32019](E.2.1)

Basis Discussion: The posting port shield doors are interlocked to ensure only one is open at a time to prevent shine through paths.
[ALARA]

Verification: Verification is expected to be achieved through:

Verif. Method	Verif. By	Plan	Notes/Comments
I	ENG	Review design to verify incorporation of the canister swabbing and monitoring posting port door-to-door interlocks.	Document in DVR
D	SU/COM	Demonstrate the operability of the canister swabbing and monitoring posting port door-to-door interlocks.	

3.11.2.2 Canister Swabbing and Monitoring Posting Port Gamma Monitor Interlock

Requirement: The HDH posting port shall include non-safety interlocks to prevent the out-cave posting port shield door from opening when a high radiation source is present. [Sections 4.4.22.2, PDSA - HLW Facility, ROIN: 45-32017](E.2.1)

Basis Discussion: The posting port out-cave shield door is interlocked with the gamma monitors to ensure the door is not opened when a high radiation source is present in the posting port. The high radiation setpoint will be determined by Radiation engineering.
[ALARA]

Verification: Verification is expected to be achieved through:

Verif. Method	Verif. By	Plan	Notes/Comments
I	ENG	Review design to verify incorporation of the canister swabbing and monitoring posting port gamma monitor interlocks.	
D	SU/COM	Demonstrate the operability of the canister swabbing and monitoring posting port gamma monitoring interlocks.	

3.11.2.3 Implementation of Active Safety Instrumented Functions

Requirement: The active safety instrumented functions for the HDH system shall be designed in accordance with the safety criterion 4.3-1, 4.3-3, 4.3-4, 4.3-6, 4.4-1 and 4.4-2 of 24590-WTP-SRD-ESH-01-001-02, Safety Requirements Document Volume II. [Safety Criterion 4.3-1, 4.3-3, 4.3-4, 4.3-6, 4.4-1, 4.4-2, SRD, ROIN: 1-38671, ROIN: 1-38672, ROIN: 1-38676, ROIN: 1-38677, ROIN: 1-38679, ROIN: 1-38680, ROIN: 1-38684 ROIN: 1-38685, ROIN: 1-38690, ROIN: 1-38691, ROIN: 1-38693, ROIN: 1-38694, ROIN: 8-498, ROIN: 8-3520, ROIN: 8-3521, ROIN 8-6580]

Basis Discussion: The SRD establishes the criterion and applicable standards for the safety design. The design processes including 24590-WTP-GPG-J-015, *Safety Instrumented System Implementation* and electrical design criteria are used to ensure independence and that the design complies with the mandated standards. The completed designs are documented in Safety Systems Requirements Specification and other design documents, which are required to be verified to ensure compliance with the standards.

Verification: Verification is expected to be achieved through:

Verif. Method	Verif. By	Plan	Notes/Comments
I	ENG	Verify the Safety Systems Requirements Specifications and designs are in accordance with the criterion and standards in safety criterion 4.3-1, 4.3-3, 4.3-4, 4.3-6, 4.4-1 and 4.4-2 of 24590-WTP-SRD-ESH-01-001-02, Safety Requirements Document Volume II.	Document in DVR report

3.11.3 System Interface Requirements

3.11.3.1 Active Safety Instrumentation, Programmable Protection System

Requirement: The HDH Instruments with active safety functions are required to interface with the PPJ or be engineered as local safety instrumented functions. Signal interfaces shall use standard 4-20 mA or digital contacts. Appendix C provides a list of the HDH active safety instrumented functions and implementing components for the HDH system. [Section 7.1, BOD, ROIN: 1-40609]

Basis Discussion: Active safety instrumentation is implemented independently to the normal control system (PCJ/ MHJ) through the PPJ system or in local logic solvers. The PPJ is the main safety system logic solver used on WTP and includes logic programming to implement the active safety controls. The HDH posting port shield door interlocks are hardwired and do not interface with the MHJ or PPJ.

Verification: Verification is expected to be achieved through:

Verif. Method	Verif. By	Plan	Notes/Comments
I	ENG	Verify required interface is included in specifications and material requisitions (MRs) used to procure active safety instruments.	

3.11.4 Other Technical, Specialty, Operations and Maintenance Requirements

3.11.4.1 Process Control System – Remote Control Operations

Requirement: The HDH design shall include: [Sections 6.7, 8.1.2, 9.12, 9.4.2, 11.3.2, 11.4.1, 11.5.2, 11.8.3.1, 12.6.3, BOD, ROIN:1-40909, ROIN: 1-40913, ROIN: 1-41132, ROIN: 1-41133, ROIN: 1-41134, ROIN: 1-41148, ROIN: 1-41153, ROIN: 1-41215, ROIN: 1-40577, ROIN: 1-40729, ROIN: 1-41030, ROIN: 1-41328, ROIN: 1-41174, ROIN: 1-41155][Section 14.4, ORD, ROIN: 1-40069](M.1.1, M.1.2, M.1.3, M.1.4, M.1.5, M.1.6, M.1.7, M.1.8, M.1.9, M.1.10, M.1.11, M.1.12)

- **Canister rinse vessel**
  - The design shall have the capability to remotely monitor the vessel contents' level using the PCJ.
  - The design shall have the capability to remotely control and monitor the spray water flow rate using the PCJ.
  - The design shall have the capability to remotely control and monitor the inflatable seal pressure using the PCJ.

- **Decontamination vessels**
  - The design shall have the capability to remotely monitor the vessel contents' temperature, pressure, and level using the PCJ.
  - The design shall have the capability to remotely control and monitor the nitric acid spray flow rate using the PCJ.
  - The design shall have the capability to remotely control and monitor the water spray flow rate using the PCJ.
  - The design shall have the capability to remotely control and monitor the PCW/heating water flow rate through the decontamination coils using the PCJ.
  - The design shall have the capability to remotely control the addition of ceric nitrate using the PCJ.

- **Neutralization vessel**
  - The design shall have the capability to remotely monitor the vessel contents' temperature, pressure, and level using the PCJ.
  - The design shall have the capability to remotely control and monitor the addition of sodium hydroxide using the PCJ.
  - The design shall have the capability to remotely control the addition of hydrogen peroxide using the PCJ.
  - The design shall have the capability to remotely control and monitor the water spray flow rate using the PCJ.

- **Transfer pumps**
  - The design shall have the capability to remotely start and terminate transfer pump operation using the PCJ.

- **Heat exchanger**
  - The design shall have the capability to remotely control the steam supply and heat exchanger operation using the PCJ.

- **Spargers**
  - The design shall have the capability to remotely control and monitor sparger flow rate to the decontamination vessels and neutralization vessel using the PCJ.

- **Remote Operated Valves**
  - The design shall have the capability to remotely open or close using the PCJ.
  - The design shall have the capability to transmit the operating position to the PCJ.

- **Steam ejectors**
  - The design shall have the capability to operate steam ejectors using the PCJ.

Basis Discussion: The PCJ remotely controls the process valves and pumps to perform the functions listed above. Instruments transmit their status to the PCJ for monitoring.
[ALARA]

Verification: Verification is expected to be achieved through:

Verif. Method	Verif. By	Plan	Notes/Comments
I	ENG	Review of design to verify capability to remotely monitor and control the listed functions.	Document in an evaluation/assessment.

3.11.4.2 Mechanical Handling Control System

Requirement: The following HDH equipment shall be controlled and monitored through the MHJ: [Section 9.6.2, BOD, ROIN: 1-41007](A.5.1, J.1.2, N.1)

- Shield doors
- Shield hatches
- Decontamination crane and associated hoists
- Decontamination crane recovery device
- Bogies
- Bogie recovery devices
- Decontamination vessel lid drives
- Swabbing manipulator
- Swabbing manipulator elevator
- Swabbing turntable
- Non-Safety Interlock Final Control Elements and Sensors

Basis Discussion: The listed equipment is located in areas that are not normally accessible to personnel and are operated through the MHJ. MHJ interfaces for control of equipment exists in controls rooms, at a cave face, or in an accessible area near inaccessible equipment. The MHJ provides the following functions:

- Sequence control of discrete mechanical handling equipment
- Device interlocks (when not completely self-contained within packaged equipment)
- Control of process functions integral to the mechanical handling system
- Control of package-supplied equipment

[ALARA]

Verification: Verification is expected to be achieved through:

Verif. Method	Verif. By	Plan	Notes/Comments
I	ENG	Review the HDH design to verify the listed HDH equipment/components listed above can be remotely monitored and controlled by the MHJ.	Document in an evaluation/assessment.

3.11.4.3 Non-Safety Interlocks

3.11.4.3.1 Door to Hatch Interlocks

Requirement: Non-safety interlocks shall be provided to prevent the following doors or hatches from being open simultaneously: [Sections 7.3.4, 9.6.2, 12.4.4, BOD, ROIN: 1-40647, ROIN: 8-15066, ROIN: 1-41279](J.1.4)

- Canister handling cave export hatch (HDH-HTCH-00003), canister decontamination cave import hatch (HDH-HTCH-00004), and the canister rinse bogie maintenance shield door (HDH-DOOR-00001)
- Canister decontamination cave import hatch (HDH-HTCH-00004), canister decontamination cave export hatch (HDH-HTCH-00002), and the decontamination crane maintenance area shield door (HDH-DOOR-00002)
- Canister decontamination cave export hatch (HDH-HTCH-00002) and the canister storage cave import hatch (HEH-HTCH-00004)
- Posting port in-cave shield door and posting port out-cave shield door
- Glovebox outer airlock door and glovebox inner airlock door

Basis Discussion: To ensure the proper operation of facility HVAC systems achieving negative pressure to provide cascade airflow from areas with low contamination potential to areas with high contamination potential, doors and hatches are prevented from being open simultaneously. This control is subject to automatic control via interlocks. Interlock functionality may be accomplished by hardware, software, or a combination of both. [ALARA]

Verification: Verification is expected to be achieved through the following:

Verif. Method	Verif. By	Plan	Notes/Comments
I	ENG	Review of design to verify interlocks are provided for the listed doors or hatches.	
D	SU/COM	Demonstrate the operability of interlocks for the listed doors or hatches.	

3.11.4.3.2 Equipment Protection Interlocks

Requirement: The following non-safety interlocks shall be provided to prevent damage to HDH equipment: [Section 7.3.4, BOD, ROIN: 1-40647](J.1.4)

- Prevent decontamination crane (HDH-CRN-00005) movement into and out of the maintenance area if the hook is not raised and the maintenance door (HDH-DOOR-00002) is not open
- Prevent canister rinse bogie (HDH-TRLY-00003) movement into and out of the maintenance area if the maintenance door (HDH-DOOR-00001) is not open

Basis Discussion: These interlocks prevent HDH cranes and bogies from inadvertently causing damage to shield doors. This control is subject to automatic control via interlocks. Interlock functionality may be accomplished by hardware, software, or a combination of both.

Verification: Verification is expected to be achieved through the following:

Verif. Method	Verif. By	Plan	Notes/Comments
I	ENG	Review of design to verify interlocks are provided for the listed equipment.	
D	SU/COM	Demonstrate the operability of interlocks for the listed equipment.	

3.11.4.3.3 Bogie Movement Interlocks

Requirement: The following non-safety interlocks shall be provided for bogie movements: [Section 7.3.4, BOD, ROIN: 1-40647](J.1.4)

- Prevent canister rinse bogie (HDH-TRLY-00003) movement unless the canister handling cave export hatch (HDH-HTCH-00003), decontamination cave import hatch (HDH-HTCH-00004), and canister rinse bogie maintenance shield door (HDH-DOOR-00001) are closed (not to include canister rinse bogie movement into maintenance area)
- Prevent canister transfer tunnel bogie (HDH-TRLY-00004) movement unless the canister decontamination cave export hatch (HDH-HTCH-00002) and canister storage cave import hatch (HEH-HTCH-00004) are closed

Basis Discussion: The HDH hatches have spool pieces which create a controlled air gap with the canister rinse vessel and canister transfer tunnel bogie. If the bogie moves away from the spool piece while the hatch is open, a larger air gap is created which increases the chance of spreading contamination and affects cascading air flow.

Interlocks for hatches to be closed for all bogie movements prevent the bogie from moving with the crane grapple attached to the canister. This prevents damage to the HDH equipment. This control is subject to automatic control via interlocks. Interlock functionality may be accomplished by hardware, software, or a combination of both.
[ALARA]

Verification: Verification is expected to be achieved through the following:

Verif. Method	Verif. By	Plan	Notes/Comments
I	ENG	Review of design to verify interlocks are provided for the listed bogies and hatches.	
D	SU/COM	Demonstrate the operability of interlocks for the listed bogies and hatches.	

3.11.4.3.4 Bogie to Hatch Interlocks

Requirement: Non-safety interlocks shall be provided to prevent the listed hatches from opening unless a bogie is positioned beneath the hatch: [Section 7.3.4, BOD, ROIN: 1-40647](J.1.4)

- Canister handling cave export hatch (HDH-HTCH-00003)
- Canister decontamination cave import hatch (HDH-HTCH-00004)
- Canister decontamination cave export hatch (HDH-HTCH-00002)

Basis Discussion: The HDH hatches have spool pieces to create a controlled gap with the bogie. This interlock ensures this gap is controlled to maintain cascading air flow. This control is subject to automatic control via interlocks. Interlock functionality may be accomplished by hardware, software, or a combination of both.

Verification: Verification is expected to be achieved through the following:

Verif. Method	Verif. By	Plan	Notes/Comments
I	ENG	Review of design to verify interlocks are provided for the listed bogies and hatches.	
D	SU/COM	Demonstrate the operability of interlocks for the listed bogies and hatches.	

3.11.4.3.5 Canister Rinse Bogie Recovery Device Interlock

Requirement: A non-safety interlock shall be provided that prevents the canister rinse bogie recovery device (HDH-RCVY-00009) from moving the canister rinse bogie (HDH-TRLY-00003) past the decontamination cave import hatch (HDH-HTCH-00004) with a canister. [Section 7.3.4, BOD, ROIN: 1-40647](J.1.4)

Basis Discussion: The bogie recovery devices consist of blocks at the end of a cable that are used to move the bogie to a position below a hatch for canister removal by a crane. If the recovery devices move the bogies past the hatches, there is no way to remove the canister from the bogie.

Verification: Verification is expected to be achieved through the following:

Verif. Method	Verif. By	Plan	Notes/Comments
I	ENG	Review of design to verify interlocks are provided for the canister rinse bogie recovery device.	
D	SU/COM	Demonstrate the operability of interlocks for the listed recovery devices.	

3.11.4.3.6 Canister Transfer Tunnel Bogie Recovery Device Interlock

Requirement: A non-safety interlock shall be provided to prevent the canister transfer tunnel bogie recovery device (HDH-RCVY-00007) from moving the canister transfer tunnel bogie (HDH-TRLY-00004) past the canister storage cave import hatch (HEH-HTCH-00004) with a canister. [Section 7.3.4, BOD, ROIN: 1-40647](J.1.4)

Basis Discussion: The bogie recovery devices consist of blocks at the end of a cable that are used to move the bogie to a position below a hatch for canister removal by a crane. If the recovery devices move the bogies past the hatches, there is no way to remove the canister from the bogie.

Verification: Verification is expected to be achieved through the following:

Verif. Method	Verif. By	Plan	Notes/Comments
I	ENG	Review of design to verify interlocks are provided for the canister transfer tunnel bogie recovery device.	
D	SU/COM	Demonstrate the operability of interlocks for the listed recovery devices.	

3.11.4.3.7 Contamination and Radiation Control Interlocks

Requirement: The following non-safety interlocks shall be provided for contamination and radiation control: [Section 7.3.4, BOD, ROIN: 1-40647](J.1.4)

- Prevent the canister rinse bogie maintenance shield door (HDH-DOOR-00001) from opening when a canister is present in the canister rinse vessel (HDH-VSL-00001)
- Prevent canister rinse bogie movement from entrance of maintenance area (below HDH-CRN-00004) when the maintenance area lid is not installed and when the canister rinse bogie maintenance door is open

Basis Discussion: These interlocks prevent radiation and contamination exposure to workers. This prevents the canister rinse bogie maintenance door from opening with a canister present in the canister rinse tunnel, which could create a shine path through the maintenance area SPAD and into the corridor. The canister rinse vessel lid is provided to contain and provide shielding for contamination that may be present in the canister rinse vessel from rinsing canisters.
[ALARA]

Verification: Verification is expected to be achieved through the following:

Verif. Method	Verif. By	Plan	Notes/Comments
I	ENG	Review of design to verify interlocks are provided for the listed equipment.	
D	SU/COM	Demonstrate the operability of interlocks for the listed equipment.	

3.11.4.3.8 Local/Maintenance Mode

Requirement: Equipment operated under MHJ control shall have a local/maintenance mode that allows direct actuation of the equipment at the local control panel, disregards MHJ commands and interlocks, maintains independent protection interlocks, and provides a local/remote status signal to the MHJ. [Sections 11.10, 11.12.3.6, ORD, ROIN: 8-6071, ROIN: 8-6072, ROIN: 8-6073, ROIN: 1-40012][Section 7.3.5.3, BOD, ROIN: 1-40658]

- Shield doors (HDH-DOOR-00001, -00002)
- Shield hatches (HDH-HTCH-00002, -00003, -00004)
- Decontamination crane and associated hoists (HDH-CRN-00005)
- Decontamination crane recovery device (HDH-RCVY-00004)
- Bogies (HDH-TRLY-00003, -00004)
- Bogie recovery devices (HDH-RCVY-00007, -00009)
- Decontamination vessel lid drives (HDH-DRIV-00001, -00008)
- Swabbing manipulator (HDH-MANIP-00001)
- Swabbing manipulator elevator drive (HDH-DRIV-00007)
- Swabbing turntable drive (HDH-DRIV-00004)
- Non-Safety Interlock Final Control Elements and Sensors

Basis Discussion: Local/maintenance mode allows equipment to be operated for maintenance/diagnostic purposes. Disregarding MHJ commands protects personnel and equipment from remotely-initiated operation. Independent protection interlocks, which prevent equipment damage from incorrect operation, include but are not limited to: end stop interlocks which prevent over travel, over speed interlocks, over or under voltage relays, over temperature switches, and variable or adjustable speed drive fault relays.

Verification: Verification is expected to be achieved through the following:

Verif. Method	Verif. By	Plan	Notes/Comments
I	ENG	Review equipment local control panel* design to verify required local/maintenance mode features and functions are provided.	*Where motor starters are located within a WTP motor control center, the motor control center functions as the local control panel.
D	SU/COM	Demonstrate the operability of local/maintenance mode features and functions during operation from the local control panels.	

3.11.4.3.9 Local Control Interlocks

Requirement: Local control stations for the following equipment shall include independent protection interlocks. [Section 11.10, ORD, ROIN: 8-6073]

- Maintenance Cranes (HDH-CRN-00002, -00004, -00006, -00007)
- Posting Port (HDH-TWDVC-00002)
- Glovebox (HDH-MHAN-00001)
- Shield doors (HDH-DOOR-00001, -00002)
- Shield hatches (HDH-HTCH-00002, -00003, -00004)
- Decontamination crane and associated hoists (HDH-CRN-00005)
- Decontamination crane recovery device (HDH-RCVY-00004)
- Bogies (HDH-TRLY-00003, -00004)
- Bogie recovery devices (HDH-RCVY-00007, -00009)
- Decontamination vessel lid drives (HDH-DRIV-00001, -00008)
- Swabbing manipulator (HDH-MANIP-00001)
- Swabbing manipulator elevator drive (HDH-DRIV-00007)
- Swabbing turntable drive (HDH-DRIV-00004)
- Non-Safety Interlock Final Control Elements and Sensors

Basis Discussion: The listed equipment can be operated at local control points. To prevent damage from incorrect operation, device failure, or other undesired conditions, the local control station has independent protection interlocks to prevent damage to the equipment and instruments in the control station. Independent protection interlocks include, but are not limited to: end stop interlocks which prevent over travel, over speed interlocks, over or under voltage relays, over temperature switches, and variable or adjustable speed drive fault relays.

Verification: Verification is expected to be achieved through the following:

Verif. Method	Verif. By	Plan	Notes/Comments
I	ENG	Review the equipment's local control panel* design to verify incorporation of independent protection interlocks.	*Where motor starters are located within a WTP motor control center, the motor control center functions as the local control panel.
D	SU/COM	Demonstrate the operability of the independent protection interlocks during operation from the local control panel.	

3.11.4.4 Accessibility for Calibration, Testing, and Inspection

Requirement: The HDH system design shall provide the capability to access and perform remote (in cave) or direct (out cave) calibration, maintenance, periodic functional testing, and inspections of equipment and components during normal operation in areas that are ALARA. [Sections 6.7, 8.1.2, 9.12, 12.6.3, BOD, ROIN: 1-40577, ROIN: 1-40729, ROIN: 1-41030, ROIN: 1-41328][Sections 9.1, 11.16, ORD, ROIN: 8-4346, ROIN: 8-10053, ROIN: 8-10056]

Basis Discussion: Instruments that require hands on maintenance or calibration will be located in C2 or C1 areas. Detectors and sensors are located inside the cave and the instrument is located in a C2 or C1 area. Instruments may be located in-cave when remote maintenance and calibration is possible. See requirement 3.11.4.5 for transducer location.
[ALARA]

Verification: Verification is expected to be achieved through the following:

Verif. Method	Verif. By	Plan	Notes/Comments
I	ENG	Review design to verify configurations that facilitates replacement and removal, or remote/direct calibration and maintenance, of equipment in areas that are ALARA.	Document in an evaluation/assessment. Plant Engineering to participate in and / or review the evaluation/assessment.

3.11.4.5 Transducer Location

Requirement: HDH transducer panel housing liquid level systems and associated remote I/O and pressure transducers shall be located in C3 areas. [Section 11.16, ORD, ROIN: 8-10059]

Basis Discussion: Transducer panel housing liquid level systems and associated remote I/O and pressure transducers that contact contaminated fluid are located in C3 areas to provide proper control in the event of back contamination.
[ALARA]

Verification: Verification is expected to be achieved through the following:

Verif. Method	Verif. By	Plan	Notes/Comments
I	ENG	Review HDH design to verify transducer panel housing liquid level systems and associated remote I/O and pressure transducers are located in C3 areas.	

3.12 Other Structures, Systems, and Components Requirements

3.12.1 Mission and Functional / Performance Requirements (Including States/Modes)

3.12.1.1 Demister

Requirement: The HDH decontamination vessels shall include a demister to lessen aerosol carryover into the PJV system. (D.1)

Basis Discussion: A HDH demister is located on the HDH decontamination vessels overflow piping and connects the vessel to the PJV system. The demister prevents excessive moisture and aerosols in the PJV ventilation system. The PJV is used to vent the decontamination vessels because the expected levels of contamination are less than that of PVV, which prevents the higher contamination levels of PVV from contaminating the decontamination vessels.

[ALARA]

Verification: Verification is expected to be achieved through the following:

Verif. Method	Verif. By	Plan	Notes/Comments
I	ENG	Review the design to verify incorporation of a demister on the vents to the PJV system.	Document in an evaluation/assessment.

3.12.1.2 Canister Recovery

Requirement: The HDH design shall include the capability to recover a dropped canister. (N.1.7)

Basis Discussion: A canister recovery tool (HEH-RCVY-00005) is used with the decontamination crane to recover a dropped canister. Design capability includes the ability to import the recovery tool and for the recovery tool to interface with the overhead crane.

Verification: Verification is expected to be achieved through the following:

Verif. Method	Verif. By	Plan	Notes/Comments
I	ENG	Review the design to verify incorporation of a canister recovery tool.	
D	SU/COM	Demonstrate canister recovery capability in accordance with 24590-WTP-PL-RACT-RT-0001, *WTP Remotability Verification Plan.*	

3.12.1.3 Instrument Service Air – Air Supply

Requirement: The HDH control valves and instruments shall interface with ISA to receive air supply to provide the motive force to open/operate control valves and instruments. (O.1)

Basis Discussion: None.

Verification: Verification is expected to be achieved through the following:

Verif. Method	Verif. By	Plan	Notes/Comments
I	ENG	Review the design to verify the HDH control valves and instruments interface with the ISA system.	

3.13 Relevant Codes and Standards

3.13.1 Codes of Record

The table below identifies relevant external codes and standards applicable to the HDH design. These are selected from those documents that comprise the Code of Record (COR) as established in 24590-WTP-RPT-ENG-01-001, Technical Baseline Description, i.e., the WTP Contract, the Basis of Design (BOD), and the Safety Requirements

Document Volume II (SRD). Use of these documents is typically invoked in the design process through the documents identified in Section 3.13.2. Beyond inclusion here, no attempt is made in this document to extract individual design requirements from these documents for allocation to SSCs.

In some cases, the expected means of verification may be established on the basis of tests or other criteria required by the codes and standards. This does not necessarily include verification or testing more appropriately defined in the procurement of individual subsystems or components, or which is a routine activity defined by specifications and/or procedures used by construction and startup.

Table 3-5: HDH System Applicable Codes and Standards

Implementing Codes and Standards: [Contract No. DE-AC27-01RV14136, WTP Contract]
• Not applicable
Implementing Codes and Standards: [24590-WTP-DB-ENG-01-001, Rev 2, Basis Of Design]
• AISC M016-89, *Manual of Steel Construction – Allowable Stress Design, Ninth Edition.*
• ANSI N14.6, *Radioactive Materials - Special Lifting Devices for Shipping Containers Weighing 10.000 Pounds (4500 kg) or More.*
• ANSI/AISC N690-1994, *Specification for the Design, Fabrication, and Erection of Steel Safety-Related Structures for Nuclear Facilities.*
• API STD-610, *Centrifugal Pumps for Petroleum, Heavy Duty Chemical, and Gas Service.*
• ASME B30.2, *Overhead and Gantry Cranes (Top Running Bridge, Single or Multiple Girder, Top Running Trolley Hoist).*
• ASME B30.11, *Monorails and Underhung Cranes.*
• ASME B30.16, *Overhead Hoists (Underhung).*
• ASME B46.1, *Surface Texture, Surface Roughness, Waviness and Lay*
• ASME BPVC-2001, *Boiler and Pressure Vessel Codes,* Section VIII, Rules for Construction of Pressure Vessels
• ASME NOG-1, *Rules for Construction of Overhead and Gantry Cranes (Top Running Bridge, Multiple Girder).*
• AWS D1.1, *Structural Welding Code - Steel.*
• AWS D1.6, *Structural Welding Code - Stainless Steel.*
• CMAA 70, *Specifications for Top Running Bridge and Gantry Type Multiple Girder Electric Overhead Traveling Cranes*
• CMAA 74, *Specifications for Top Running and Under Running Single Girder Electric Overhead Traveling Cranes Utilizing Under Running Trolley Hoist*
• IESNA RP-7, *Industrial Lighting.*
• NFPA 70-1999, *National Electrical Code.*
• NFPA 101-1997 and 2000, *Life Safety Code.*
• OSHA 29 CFR 1910, *Occupational Safety and Health Standards.*
• UBC-1997, *Uniform Building Code.*
• WAC 173-303, *Washington Administrative Code - Dangerous Waste Regulations.*

Table 3-5: HDH System Applicable Codes and Standards

Implementing Codes and Standards: [24590-WTP-SRD-ESH-01-001-02, Rev 7d, Section 4, SRD]
• ANSI/ISA-67.04.01-2006, *Setpoints for Nuclear Safety-Related Instrumentation*, as tailored in Appendix C of the SRD.
• ANSI N42.18-1980 (R1991), *Specification and Performance of On-Site Instrumentation for Continuously Monitoring Radioactivity in Effluents.*
• ASME B31.3-1996, *Process Piping*, as tailored in Appendix C of the SRD
• DOE-STD-1020-94, *Natural Phenomena Hazards Design and Evaluation Criteria for Department of Energy Facilities, as tailored in Appendix C.*
• DOE-STD-1066-1997, *Fire Protection Design Criteria,* as tailored in Appendix C of the SRD.
• IBC - 2000, *International Building Code*
• IEEE 323-83, *Qualifying Class 1E Equipment for Nuclear Power Generating Stations*, as tailored in Appendix C of the SRD.
• IEEE 338-1987, *Standard Criteria for Periodic Surveillance Testing of Nuclear Power Generating Station Safety Systems*, as tailored in Appendix C of the SRD.
• IEEE 344-1987 (R1993), *IEEE Recommended Practice for Seismic Qualification of Class 1E Equipment for Nuclear Power Generating Stations, as tailored in Appendix C of the SRD.*
• IEEE 379-1994, *Application of the Single Failure Criterion to Nuclear Power Generating Station Safety Systems*, as tailored in Appendix C of the SRD.
• IEEE 382-1996, *Standard for Qualification of Actuators for Power-Operated Valve Assemblies With Safety-Related Functions for Nuclear Power Plants,* as tailored in Appendix C.
• IEEE 384-1992, *Standard Criteria for Independence of Class 1E Equipment and Circuits*, as tailored in Appendix C of the SRD.
• IEEE 497-2002, *Standard Criteria for Accident Monitoring Instrumentation for Nuclear Power Generating Stations* as tailored in Appendix C of the SRD.
• IEEE 1023-88, *Guide for the Application of Human Factors Engineering to Systems, Equipment, and Facilities of Nuclear Power Generating Stations.*
• ISA-S84.01-1996, *Application of Safety Instrumented Systems for the Process Industries.*
• NFPA 69-2002, *Standard on Explosion Prevention Systems*, as tailored in Appendix C of the SRD.
• NFPA 801-2003, *Standard for Fire Protection for Facilities Handling Radioactive Materials*, as tailored in Appendix C of the SRD.

3.13.2 WTP Design Criteria, Design Guides, and General Specifications

Table 3-6 identifies relevant discipline design criteria, guides, and general specifications applicable to the HDH system. Use of these documents to develop the detailed design of SSCs is governed by engineering procedures. The majority of requirements contained within this document are derived from external codes and standards, or are specified methods and approaches, to achieve standardization and consistency of design. Beyond inclusion here, no attempt is made in this document to extract individual design requirements from these documents for tracing and verification, or to define how direction provided by these documents is applicable and allocated (or not) to individual SSCs.

Table 3-6: WTP Design Criteria, Design Guides, and General Specifications Applicable to HDH

Document Number	Title
Design Criteria Documents	
24590-WTP-DC-M-06-001	*Mechanical Systems Design Criteria*
24590-WTP-DC-E-01-001	*Electrical Design Criteria*
24590-WTP-DC-E-06-002	*Design Criteria for Independence of Safety Equipment and Circuits*
24590-WTP-DC-E-07-001	*Design Criteria for Electrical Jumpers*
24590-WTP-DC-ENG-06-001	*Design Criteria for Environmental and Natural Phenomena Hazard Qualification of Structures Systems and Components*
24590-WTP-DC-PS-01-001	*Pipe Stress Design Criteria Including "Pipe Stress Criteria" and "Span Method Criteria"*
24590-WTP-DC-PS-01-002	*Pipe Support Design Criteria*
24590-WTP-DC-PS-03-001	*Jumper Stress Design Criteria*
24590-WTP-DC-ST-04-001	*Seismic Analysis and Design Criteria*
24590-WTP-PD-ENG-0001	*Equipment Qualification*
Design Guides	
24590-WTP-GPG-ENG-004	*Design Guide Pipe Stress, Pipe Layout, and Support Spacing*
24590-WTP-GPG-ENG-005	*Engineering Design Guide for Pipe Support*
24590-WTP-GPG-ENG-033	*Evaluation for Seismic Interaction Effects*
24590-WTP-GPG-ENG-086	*Equipment Environmental Qualification*
24590-WTP-GPG-ENG-0094	*Pipe Design Work Process*
24590-WTP-GPG-ENG-0099	*Design Verification of Plant Design Deliverables*
24590-WTP-GPG-ENG-0103	*Equipment Seismic Qualification*
24590-WTP-GPG-ENG-0109	*Accessibility Review of Equipment and Components*
24590-WTP-GPG-ENG-0118	*Piping Component Stock Codes*
24590-WTP-GPG-ENG-0119	*Isometric Drawings Production*
24590-WTP-GPG-ENG-0123	*Disposition of Hard to Reach Spools*
24590-WTP-GPG-ENG-0127	*Processing Engineering Calculations*
24590-WTP-GPG-ENG-0129	*Waste Acceptance Impacting Determination*
24590-WTP-GPG-ENG-0130	*Waste Acceptance Impacting Item Qualification Plan*
24590-WTP-GPG-ENG-0140	*Hot Pipe Penetrations Through Concrete*
24590-WTP-GPG-ENG-0141	*WTP Radiation Damage Thresholds for Non-Metallic Materials*
24590-WTP-GPG-ENG-0144	*Piping Interface with Flexible Equipment-Stress Analysis Design Guide*
24590-WTP-GPG-ENG-0145	*SC-IIIE Piping - Stress Analysis Design Guide*
24590-WTP-GPG-ENG-0146	*Piping Coating System Selection Guide*

Table 3-6: WTP Design Criteria, Design Guides, and General Specifications Applicable to HDH

Document Number	Title
24590-WTP-GPG-ENG-0149	*Piping Classification Guide*
24590-WTP-GPG-ENG-0150	*Plant Design/Mechanical Systems Equipment Interfaces: Terminal End Equipment*
24590-WTP-GPG-ENG-0161	*Technical Requirements Management*
24590-WTP-GPG-ENG-0165	*Pipe Stress and Supports Confirmation*
24590-WTP-GPG-J-005	*Control Systems Interfaces*
24590-WTP-GPG-J-014	*Control Systems Design Process Guide*
24590-WTP-GPG-J-016	*Control Valve Sizing*
24590-WTP-GPG-J-017	*WTP Seismic Category Application to C&I Systems*
24590-WTP-GPG-J-0057	*Setpoint Calculations*
24590-WTP-GPG-M-002	*Hydraulic Seals*
24590-WTP-GPG-M-005	*Ejectors (Jet Pumps) for Liquid Slurry Pumping*
24590-WTP-GPG-M-009	*Jet Pumps (Ejectors) for Vacuum Generation*
24590-WTP-GPG-M-011	*Pipe Sizing for Compressible Flow*
24590-WTP-GPG-M-012	*Pump Net Positive Suction Head*
24590-WTP-GPG-M-013	*Plant Wash System Design*
24590-WTP-GPG-M-016	*Pipe Sizing for Lines with Liquids Containing Solids - Bingham Plastic Model*
24590-WTP-GPG-M-017	*Design Parameters & Test Pressures for Equipment & Piping*
24590-WTP-GPG-M-019	*Vessel Sizing*
24590-WTP-GPG-M-022	*Liquid and Vapor Line Sizing By Formula*
24590-WTP-GPG-M-023	*Other Losses in Piping Systems*
24590-WTP-GPG-M-027	*Recommended Slopes for Piping Systems*
24590-WTP-GPG-M-028	*Vent, Drain, and Root Valve Sizing and Selection for Piping Systems*
24590-WTP-GPG-M-032	*Vessel Overflow and Gravity Line Sizing*
24590-WTP-GPG-M-036	*Determining Quality Level and Seismic Category Classification of Sub-Components, Assemblies, Sub-Assemblies, and Parts*
24590-WTP-GPG-M-047	*Preparation of Corrosion Evaluations*
24590-WTP-GPG-M-050	*Pressure Vessel and Heat Exchanger Design*
24590-WTP-GPG-M-052	*Specifying Design Cycles for Equipment and Piping*
24590-WTP-GPG-M-0058	*Minimum Flow Velocity for Slurry Lines*
24590-WTP-GPG-M-0059	*Avoiding Chemical Line Plugging - Plant Design Considerations*
24590-WTP-GPG-M-0061	*Vessel Structural Analysis and ASME Section VIII Evaluation*
24590-WTP-GPG-P-0003	*Jumper Design Guide*

Table 3-6: WTP Design Criteria, Design Guides, and General Specifications Applicable to HDH

Document Number	Title
24590-WTP-GPG-PL-002	*Plant Design Material Control Guide*
24590-WTP-GPG-SRAD-001	*Design Guide for ALARA*
Specifications	
24590-HLW-3PS-30-T0001	*Engineering Specification for HLW Canister Racks*
24590-HLW-3PS-HDYR-T0001	*Engineering Specification for System HDH Swabbing and Monitoring System*
24590-HLW-3PS-MQR0-T0002	*Engineering Specification for HLW System HDH Canister Rinse Bogie*
24590-HLW-3PS-MX00-T0001	*Engineering Specification for QL Shielded Personnel Access Doors*
24590-LAW-3PS-ADDM-T0003	*Engineering Specification for LAW Bogie and Monorail Shield Doors*
24590-WTP-3PS-ADDC-T0002	*Engineering Specification for HLW System Transfer Hatches, Hatch Drives, Hatch Pushrod Assemblies, and Floor Penetration Liners*
24590-WTP-3PS-ADDH-T0001	*Engineering Specification for HLW/PTF Bogie Shield Doors*
24590-WTP-3PS-ADDH-T0006	*Engineering Specification for QL Crane Maintenance Shield Doors for HLW and PTF*
24590-WTP-3PS-AFPS-T0001	*Engineering Specification for Shop Applied Special Protective Coatings for Steel Items and Equipment*
24590-WTP-3PS-EEC0-T0003	*Engineering Specification for Local Operator Interface Workstations*
24590-WTP-3PS-FB01-T0001	*Engineering Specification for Structural Design Loads for Seismic Category III & IV Equipment and Tanks*
24590-WTP-3PS-G000-T0002	*Engineering Specification for Positive Material Identification (PMI) for Shop Fabrication*
24590-WTP-3PS-G000-T0015	*Engineering Specification for Environmental Qualification of Mechanical Equipment*
24590-WTP-3PS-JQ00-T0004	*Engineering Specification for Management of Supplier Software*
24590-WTP-3PS-JQ00-T0005	*Engineering Specification for Management of Supplier Safety Software*
24590-WTP-3PS-JQ07-T0001	*Engineering Specification for Instrumentation for Package Systems*
24590-WTP-3PS-JQ08-T0001	*Engineering Specification for Construction and Installation of Controls and Instrumentation*
24590-WTP-3PS-M000-T0006	*Engineering Specification for WTP Facility Posting Port*
24590-WTP-3PS-M000-T0007	*Engineering Specification for WTP Facility Posting Port Glovebox*
24590-WTP-3PS-M000-T0012	*Engineering Specification for Master Slave Manipulators for PTF, HLW, LAW and LAB*
24590-WTP-3PS-MJKG-T0002	*Engineering Specification for CMAA 74 Top Running Single Girder & CMAA 70 Top Running Bridge & Gantry Type Multiple Girder EOT Cranes*
24590-WTP-3PS-MJKH-T0001	*Engineering Specification for Commercial Quality Monorail Hoists, Jib Cranes, and under-Running Single Girder Cranes*

Table 3-6: WTP Design Criteria, Design Guides, and General Specifications Applicable to HDH

Document Number	Title
24590-WTP-3PS-MJKJ-T0003	*Engineering Specification for Remote Operated Under Running Crane and Jib Cranes (Commercial Quality)*
24590-WTP-3PS-MPC0-T0009	*Engineering Specification for Vessel-Mounted Vertical Transfer Pumps - WTP HLW Facility*
24590-WTP-3PS-MQL0-T0003	*Engineering Specification for Special Grapples and Lifting Devices*
24590-WTP-3PS-MQR0-T0002	*Engineering Specification for HLW Standardized Bogies*
24590-WTP-3PS-MV00-T0001	*Engineering Specification for Pressure Vessel Design and Fabrication*
24590-WTP-3PS-MV00-T0002	*Engineering Specification for Seismic Qualification Criteria for Pressure Vessels*
24590-WTP-3PS-MX00-T0002	*Engineering Specification for Shielded Glass Windows*
24590-WTP-3PS-P000-T0001	*Engineering Specification for Piping Material Classes General Description and Summary*
24590-WTP-3PS-PB01-T0001	*Engineering Specification for Technical Supply Conditions for Pipe, Fittings, and Flanges*
24590-WTP-3PS-SS90-T0001	*Engineering Specification for Seismic Qualification of Seismic Category I/II Equipment and Tanks*
24590-WTP-3PS-SS90-T0002	*Engineering Specification for WTP Project Tailoring of ANSI/AISC N690 & IEEE 323, 344 & 382*

4 System Description

This section summarizes design output information, describing the current design and the operational and maintenance aspects of the system. The information provided below does not contain design requirements and should not be used as design input. The description of the current design contained in this section may not fully align with design requirements. This is acceptable within the context of this document. Areas of misalignment are to be resolved through appropriate mechanisms and the SDD updated to reflect changes made to the design. Changes to the descriptive text will be made following the changes to the lower tiered Engineering documents.

4.1 Configuration Information

System HDH contains the bogies and canister handling equipment, rinse and decontamination vessels, swabbing and monitoring equipment, and associated equipment to carry out the following activities:

- Receive Immobilized High Level Waste (IHLW) canister from System HPH into the canister rinse tunnel
- Rinse canister with demineralized water
- Transfer IHLW canister into canister decontamination cave
- Decontaminate IHLW canister
- Transfer canister to the canister swabbing station
- Swab canister and monitor swabs using the through wall posting port and glovebox
- Transfer canister to the C3 canister storage cave (interfacing system HEH)

Major equipment are the canister rinse vessel and bogie, two canister decontamination vessels, waste neutralization vessel, swabbing manipulator and turntable, posting port and glovebox, and transfer tunnel bogie. Major support equipment includes cranes, hatches, shield doors, shield windows and master slave manipulators. System HDH equipment is located in the canister rinse tunnel (H-B039B), rinse bogie maintenance area (H-B039A), canister decontamination cave (H-0133 and H-B035), canister decontamination cave crane maintenance area (H-0313A), and the canister storage transfer tunnel (H-B037B).

Refer to drawings 24590-HLW-P1-P01T-00001, 00002, 0003, and 0004, *HLW Vitrification Building General Arrangement Plan EL. -21'-0"/0'-0"/14'-0"/37'-0"* for room locations.

4.1.1 Description of System, Subsystems, and Major Components

Note: Valves used throughout this section are nominal unless otherwise indicated.

4.1.1.1 Canister Rinse Tunnel (H-B039B)

Refer to drawings 24590-HLW-P1-P01T-00001 and 00002, *HLW Vitrification Building General Arrangement Plan EL. -21'-0" and 0'-0"*

The canister rinse tunnel (C3/C5/R3/R5) runs in the east-west direction, and is located in the south east corner of the facility at the –16 ft 6 in. elevation. The canister rinse tunnel has a Dangerous Waste Permit (DWP) secondary containment requirement. Compliance with the DWP permit requires the floor and partial walls of the tunnel to be clad in stainless steel, with the floor sloped to direct any liquids to a sump (HDH-SUMP-00001), that is part of the RLD system. Through wall lights and cameras are provided in the tunnel to provide illumination and viewing of canister handling and bogie remote operations.

The rinse tunnel houses the canister rinse bogie. The bogie receives the canister from the canister handling cave (through the canister handling cave export hatch) and transfers the canister to the canister decontamination cave. The bogie rinse vessel performs a pre-wash of the canister at the canister rinse station. The rinse station is equipped with a spool piece attached to the ceiling of the tunnel. The spool piece interfaces with the top of the rinse vessel. A seal on the top edge of the vessel inflates to provide containment of liquid during the rinse cycle. The containment of liquid and potential release of contamination in the rinse tunnel supports ALARA.

When the rinse cycle is complete, the canister is moved under the decontamination cave import hatch. The canister is lifted through the decontamination cave import hatch into the decontamination cave using the decontamination cave crane. When the canister is not present in the tunnel, personnel access can be made for maintenance and decontamination to minimize the build-up of contamination. See Figure 4-1.

4.1.1.2 Canister Rinse Bogie Maintenance Area (H-B039A)

Refer to drawings 24590-HLW-P1-P01T-00001, 00002, and 0003, *HLW Vitrification Building General Arrangement Plan EL. -21'-0" and 0'-0" and 14'-0"*

Adjacent to the tunnel and separated by a shield door is the canister rinse bogie maintenance area (C3/R3). The maintenance area is on the –16 ft elevation to the east end of the tunnel. The maintenance area houses two maintenance cranes. The upper crane provides access to the top of the rinse bogie vessel, for placing and removal of a lid on top of the vessel (that contain potential contamination in the vessel during maintenance activities) and for removal of the vessel from the bogie. The lower crane is used for general maintenance activities of the bogie, e.g. to aid handling activities of the drive system and wheel modules. Wall mounted lights and cameras are provided in the maintenance area to provide illumination and viewing of maintenance activities.

Personnel access is via a shielded personnel access door (HDH-DOOR-00004) located on the –16 ft elevation from sub-change HB039. A dedicated continuous air monitor (CAM) is used to sample air from the maintenance area prior to allowing personnel to enter the area. The air sample is taken via wall penetrations between the maintenance area and the sub-change. CAMs are part of system EMJ (Environmental Monitoring System). An area radiation monitor (ARM) is located in the maintenance area to warn of radioactivity excursions beyond the specified limits for the local area concerned and to confirm that the levels are ALARA.

Prior to bringing the bogie and vessel into the maintenance area, with the shield door open and the bogie at the door passage position, operations personnel disconnect the bogie from the power supply in the tunnel, and connect the power supply from maintenance area. This action is performed to reduce spread of potential contamination from the rinse tunnel into the maintenance area to support ALARA. Prior to bogie/vessel maintenance activities, decontamination can be performed as appropriate, taking care to minimize spread of loose contamination around the area. Decontamination methods include using hand wipes, carbon dioxide, high pressure water or steam. Carbon dioxide, high pressure water and steam are supplied to the area, but hand wipes are preferred as to prevent the spread of contamination around the maintenance area.

The bogie recovery system is located on the east wall of the maintenance area. If the bogie on board drive system fails, a cable deployed down the length of the tunnel is retrieved onto the recovery winch, which in turn pulls a recovery block down the rail, connects to the bogie, and pulls the bogie back under the decontamination cave import hatch to allow removal of the canister into the decontamination cave. With no canister present on the rinse bogie, the bogie can now be retrieved into the maintenance area.

Figure 4-1: Canister Rinse Tunnel and Maintenance Area

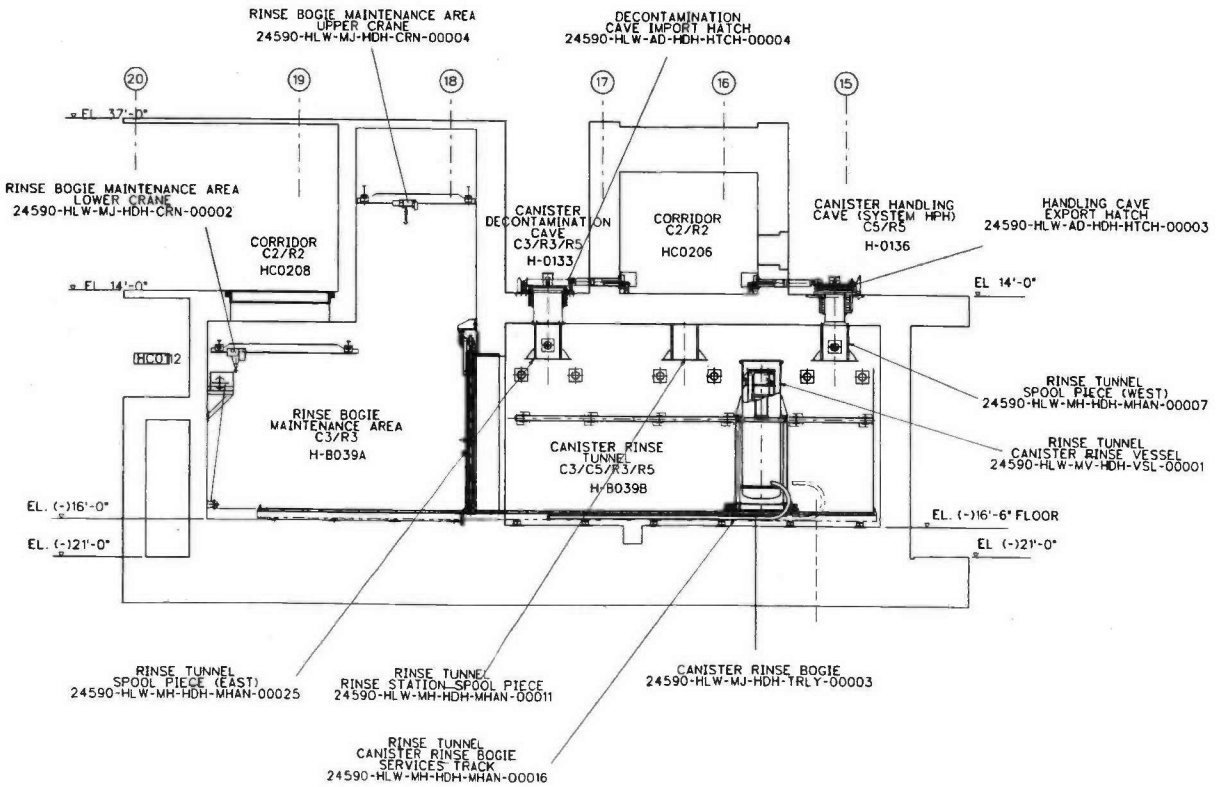

4.1.1.3 Canister Decontamination Cave (H-0133 and H-B035)

Refer to drawings 24590-HLW-P1-P01T-00001, 00002, 0003, and 0004, *HLW Vitrification Building General Arrangement Plan EL. -21'-0" and 0'-0" and 14'-0" and 37'-0"*

The canister decontamination cave (C3/R3/R5) runs in the north/south direction and is located in the south east corner of the facility between the –16 ft and +58 ft elevations. Located at the south end of the cave is the decontamination cave import hatch (over the rinse tunnel) and the canister decontamination equipment located in H-B035 (C3/C5/R3/R5), comprising two canister decontamination vessels and the waste neutralization vessel. The swabbing/monitoring station is located at the north end of the cave. Equipment in the decontamination cave is located to aid in maintenance/removal activities, that is, there is no need to dismantle or move other equipment items to gain access to equipment requiring maintenance.
Area H-B035 at –16 ft elevation is separated from the cave (H-0133) at 0 ft elevation by concrete walls and a steel platform (HPB035A). Access to the vessels in the pit is provided by ladders and platforms. Opening and closing of the decontamination vessel lids is via through wall drives adjacent to a shielded window. A pair of master/slave manipulators (MSMs) at the window can be used to manually open and close the vessel lids if required (failure of the through wall drive).

After canister decontamination is complete, the canister is moved to the swabbing and monitoring station using the decontamination cave crane. Measurement of surface contamination is performed using a remote telerobotic manipulator. The manipulator retrieves a clean swab and swabs predetermined surfaces of the canister. The swabs are transferred through the shielded swab posting port where gamma monitoring for high sources takes place prior to moving into the glovebox. The swabs are then hand monitored in a glovebox to obtain canister surface contamination information.

When acceptable canister surface cleanliness has been verified, the canister's geometric properties are checked with the manipulator and an end effector (note, the canisters geometric properties are not a WAI requirement). A load cell, which is attached between the crane hook and canister grapple, is used to weigh the canister. On acceptance of the canister profile and weight, the canister can now be exported to the canister transfer tunnel via the export hatch located south of the swabbing/monitoring station. Wall mounted lights and cameras are provided in the decontamination cave to provide illumination and viewing of canister decontamination and swabbing/monitoring activities. See Figure 4-2 for area, and equipment location. [ALARA]

A canister rack is located on the 0 ft elevation adjacent to the decontamination vessel pit. The rack can temporarily store one filled canister. Storage of a canister in the rack is only implemented for non-conforming canisters, e.g. does not comply with cleanliness or surface finish requirements. Nonconforming canisters are dispositioned as deemed appropriate.

Personnel can access the decontamination cave (H-0133) for maintenance and decontamination activities (to minimize buildup of contamination) from sub-change (H-0131A) when no canister is present in the cave and radiation and contamination levels are acceptable. Personnel access to the decontamination cave is via a shielded personnel access door (SPAD) located on the +3 ft elevation. A dedicated continuous air monitor (CAM) is used to sample air from the cave prior to allowing personnel to enter the area. The air sample is taken via wall penetrations between the cave and the operations area platform (HMB034). An Area Radiation Monitor (ARM) is located in the sub-change (H-0131A) to warn of radioactivity excursions beyond the specified limits for the local area concerned and to confirm that the levels are ALARA. CAMs and ARMs are part of system EMJ (Environmental Monitoring System).

4.1.1.4 Crane Maintenance Area (H-0313A)

Refer to drawings 24590-HLW-P1-P01T-0003 and 0004, *HLW Vitrification Building General Arrangement Plan EL. 14'-0" and 37'-0"*

A dedicated crane maintenance area (C3/R3/R5) is located on the +20 ft elevation at the north end of the decontamination cave. The CMA is separated from the decontamination cave by vertical shield door, that provides both shielding and contamination control. Wall mounted lights and cameras are provided in the CMA to provide illumination and remote viewing of maintenance activities.

The crane maintenance area (CMA) is equipped with two jib cranes. One crane is located high on the CMA east wall (approximately +65 ft elevation) and one is at a lower elevation on the west wall (approximately +33 ft elevation). The jib cranes are locally controlled, and are used to support maintenance activities on both the decontamination cave crane and any items from the decontamination cave that require maintenance in the CMA. Platforms are provided to enable inspection of, and access to all decontamination crane components.

A two-piece concrete equipment hatch (CTN: HLW-2-0005) is located in the floor of the CMA at the +20 ft elevation. The hatch provides access for movement of equipment between the CMA and sub-change H-0131A located below at the +3 ft elevation. The decontamination cave crane cable reel is located on the west wall of the CMA.

Personnel access to the CMA is via a shielded personnel access door (SPAD) located on the +37 ft elevation from sub-change H-0313. A dedicated continuous air monitor (CAM) is used to sample air from the CMA prior to allowing personnel to enter the area. The air sample is taken via wall penetrations between the CMA and the sub-change. CAMs are part of system EMJ (Environmental Monitoring System).

Figure 4-2: Canister Decontamination Cave Elevation

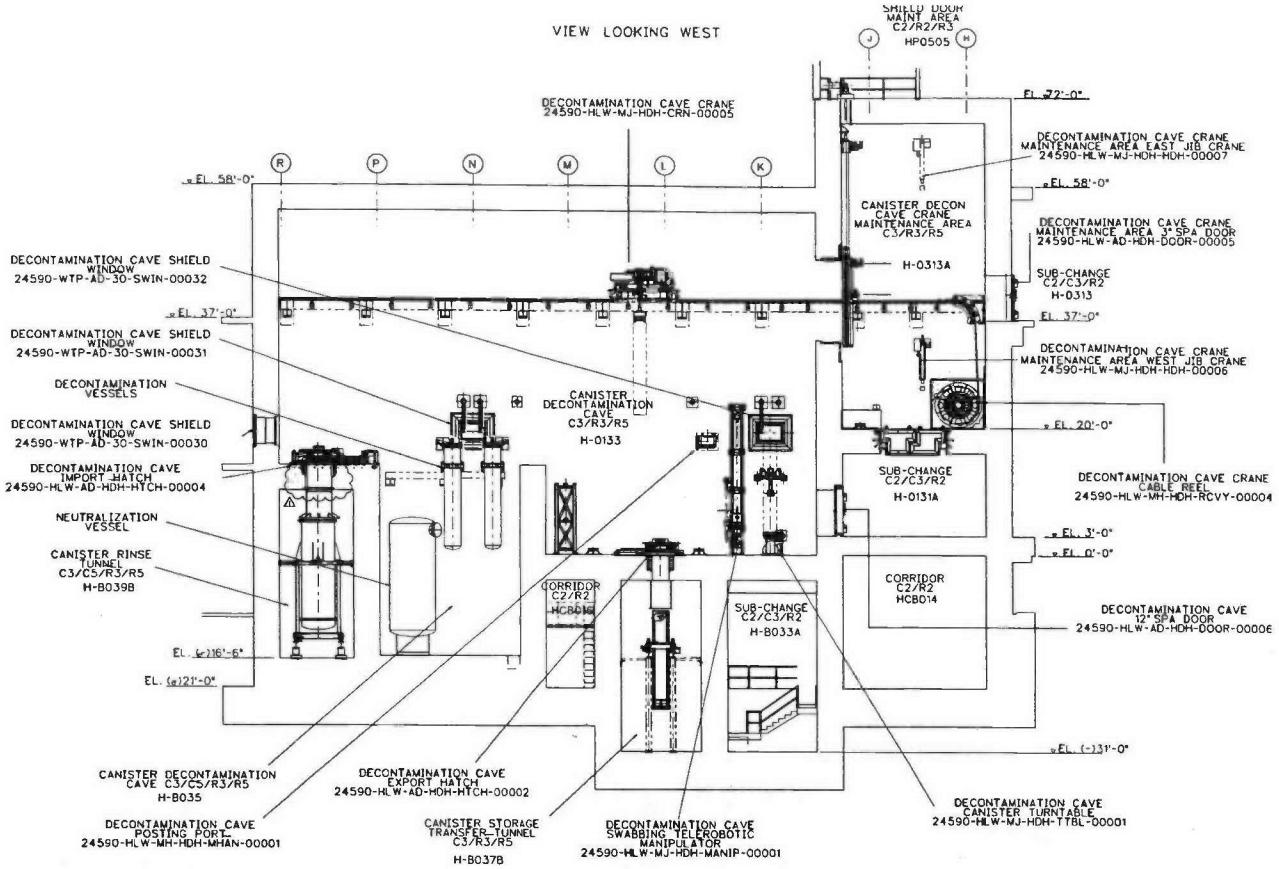

Figure 4-3: Canister Decontamination Cave Plan View

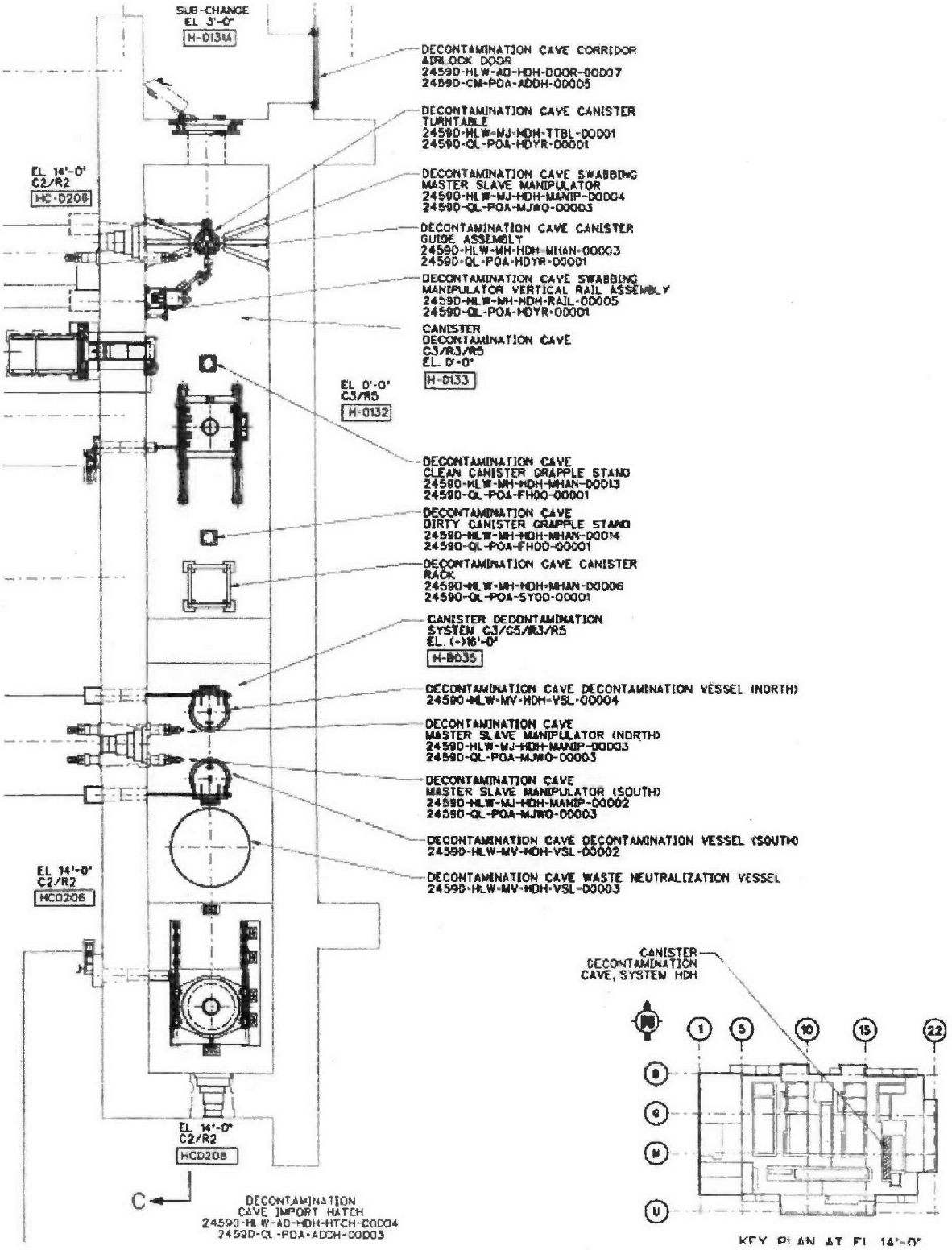

4.1.1.5 Canister Storage Transfer Tunnel (H-B037B)

Refer to drawing 24590-HLW-P1-P01T-00001, *HLW Vitrification Building General Arrangement Plan EL. -21'-0"*

The canister storage transfer tunnel (C3/R3/R5) runs in the east-west direction and is located to the east side of the facility on the –31 ft elevation. The tunnel is equipped with the storage transfer tunnel bogie, which transports the decontaminated canister between the decontamination cave and the canister storage cave (H-0132) (interfacing system HEH). The tunnel runs below the decontamination cave and canister storage cave, separated by a hatch (from each cave) at each end of the tunnel. Bogie maintenance activities take place at the east end of the tunnel, where platforms and ladders provide access to the bogie drive system and wheel modules.

Personnel access to the tunnel is via a shielded personnel access door (HDH-DOOR-00003) located on the –31 ft elevation from sub-change HB037A. A temporary/portable continuous air monitor (CAM) is used to sample air from the tunnel prior to allowing personnel to enter the area. The air sample is taken via wall penetrations between the tunnel and the sub-change. An Area Radiation Monitor (ARM) is located in the sub-change (HB037A) to warn of radioactivity excursions beyond the specified limits for the local area concerned and to confirm that the levels are ALARA. CAMs and ARMs are part of system EMJ (Environmental Monitoring System).

A bogie recovery system is located at the east end of the tunnel (maintenance area). This system is deployed if the bogie on board drive system fails. A cable deployed down the length of the tunnel is retrieved onto the recovery winch, which in turn pulls a recovery block down the rail, connects to the bogie, and pulls the bogie back under the canister storage cave import hatch to allow removal of the canister into the storage cave. The bogie can now be pulled back to the maintenance area. Wall mounted lights and cameras are provided in the maintenance area to provide illumination and viewing of maintenance activities. A provision has been made at the east end of the tunnel for a future extension of the System HDH Canister Storage Transfer tunnel. This contingency permits transportation of the canisters to a storage facility adjacent to the HLW Facility.

Figure 4-4: Canister Storage Transfer Tunnel

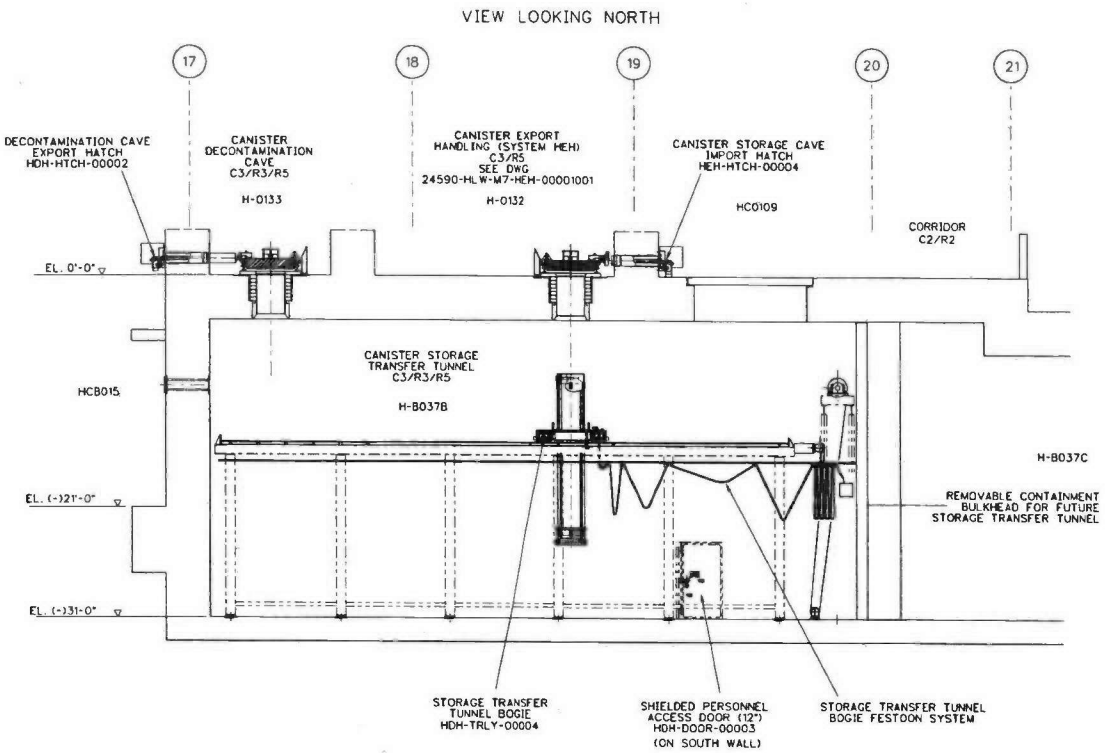

Figure 4-5: System HDH Plan View

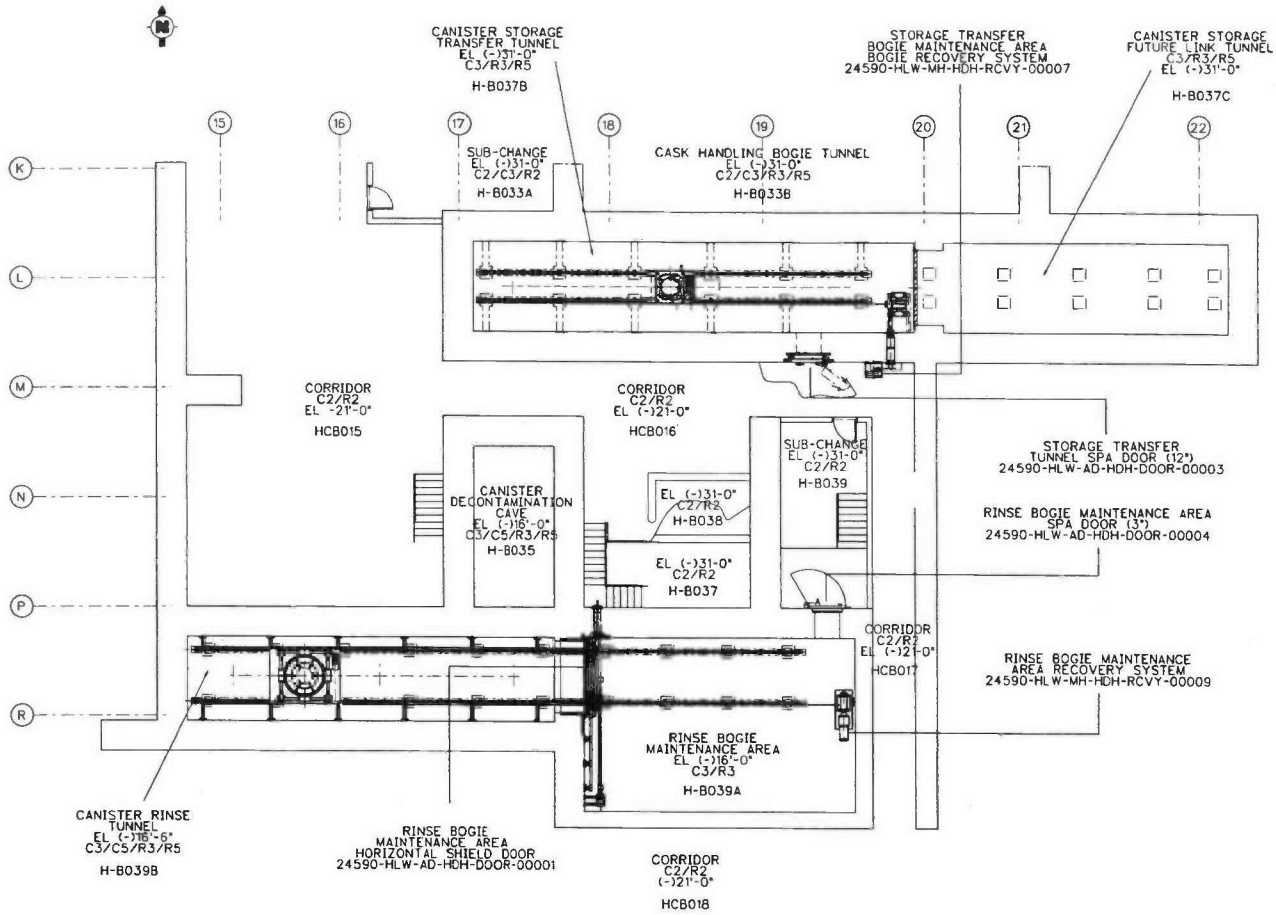

4.1.1.6 Description of Mechanical Equipment

System HDH mechanical handling equipment is designed to meet operational and ALARA requirements, with a nominal plant life of 40 years [3.4.1.2.1] to minimize worker exposure by reducing maintenance and replacement activities. Where commercially available components do not have a design life of 40 years, the equipment is designed to facilitate maintenance activities by having remote fasteners, electrical connectors etc, and the use of modularization to facilitate remote handling activities. Features to aid decontamination, such as flat smooth surfaces, elimination of crevices etc, are incorporated into the design. Materials and coatings have been selected to withstand the radiological environment, and withstand decontamination. Wherever possible, permanently sealed for life components are used.

4.1.1.6.1 Cranes and Components

4.1.1.6.1.1 Canister Decontamination Cave Crane

Component Tag Number: *24590-HLW-MJ-HDH-CRN-00005 (Crane)*
Component Tag Number: *24590-HLW-MH-HDH-RCVY-00004 (Cable Reel)*

Refer to: 24590-WTP-3PS-MJKG-T0003, *Engineering Specification for CMAA 70 High Integrity Cranes*

The canister decontamination cave crane (decontamination swab & monitoring crane) transports full canisters through the decontamination and swabbing process. The crane is a 6 ton capacity, overhead, top running, bridge crane that is located on wall mounted rails supported on structural steel work in the canister decontamination cave, and is seismically qualified to SC-II, which requires the crane to remain in place during, and after a seismic event (24590-HLW-M0X-M40T-00001). The rails extend from the canister decontamination cave through the shield door into the crane maintenance area (CMA). The walls remain the same thickness during the transition between the canister decontamination cave and CMA and the crane rail supporting steelwork remains the same design.

Control and power to the crane is provided via a multi core umbilical cable deployed into the decontamination cave from the CMA. The cable is tethered to the west end carriage of the bridge, and guided on rollers along the length of the decontamination cave, into the CMA and terminated on a cable reel. [3.4.2.2] The cable reel is driven through wall, locating the cable reel drive system out cave. The cable reeling system is SC/SC-III (24590-HLW-M0X-M40T-00001), having a safety function to remain in place in a DBE seismic event as not to create a 6-inch or greater diameter (equivalent) opening in the C5 boundary. The crane is moved to a park position in the crane maintenance area, where inspections can be performed in low radiation/contamination areas and without unsafe interferences occurring during the inspections. The crane is controlled via the MHJ from a Local Operator Interface (LOI) [3.11.4.2].

The long travel of the crane is in the north/south direction, and the cross travel is in the east/west direction. The main hoist has a variable 5 to 25 ft/min drive, and a single speed recovery drive of 5 ft/min. The main bridge has a variable 5 to 50 ft/min drive, and a single speed recovery drive of 5 ft/min. The main trolley has a variable 5 to 25 ft/min drive, and a single speed recovery drive of 5 ft/min. The powered hook has a variable rotation up to 1.8 rpm. (24590-QL-POA-MJKG-00002-08-00441)

The crane is provided with a recovery drive on the six ton hoist in the event of the primary drive failure. The trolley and bridge are supplied with jack down wheels that are deployed in the event of drive failure or wheel seizure. The jack-down wheels lift the failed wheel clear of the rail and allow return of the crane to the CMA. [3.7.1.4] The crane is of modular construction, utilizing quick connectors that facilitates removal and replacement of failed components [3.7.4.4], and is designed to withstand decontamination without degrading functionality of the electrical or mechanical components [3.4.2.3]. Permanently lubricated, sealed for life components are used wherever possible, where not provided, lubrication systems are designed to be accessible to aid maintenance [3.7.4.3]. The cable reeling system can also be used to pull the crane back to the CMA in the event of bridge drive system failure.

The main function of the decontamination cave crane is to transport full canisters (nominally 9260 lb or 4.63 tons each) through the decontamination and swabbing process. Canisters are held by the canister grapple, which is suspended from the six ton hoist (with rotating hook). The mechanically actuated grapple remotely engages and disengages with the canister neck flange. The crane may be used for the transfer of in-cave equipment (for example, transfer hatches which incorporate remote handling lifting bails) that requires maintenance to the crane maintenance area. The crane is equipped with bridge mounted lights and cameras to aid viewing of all operations and maintenance activities performed in the decontamination cave. [3.7.4.2] See Figure 4-6.

Figure 4-6: Decontamination Cave Crane

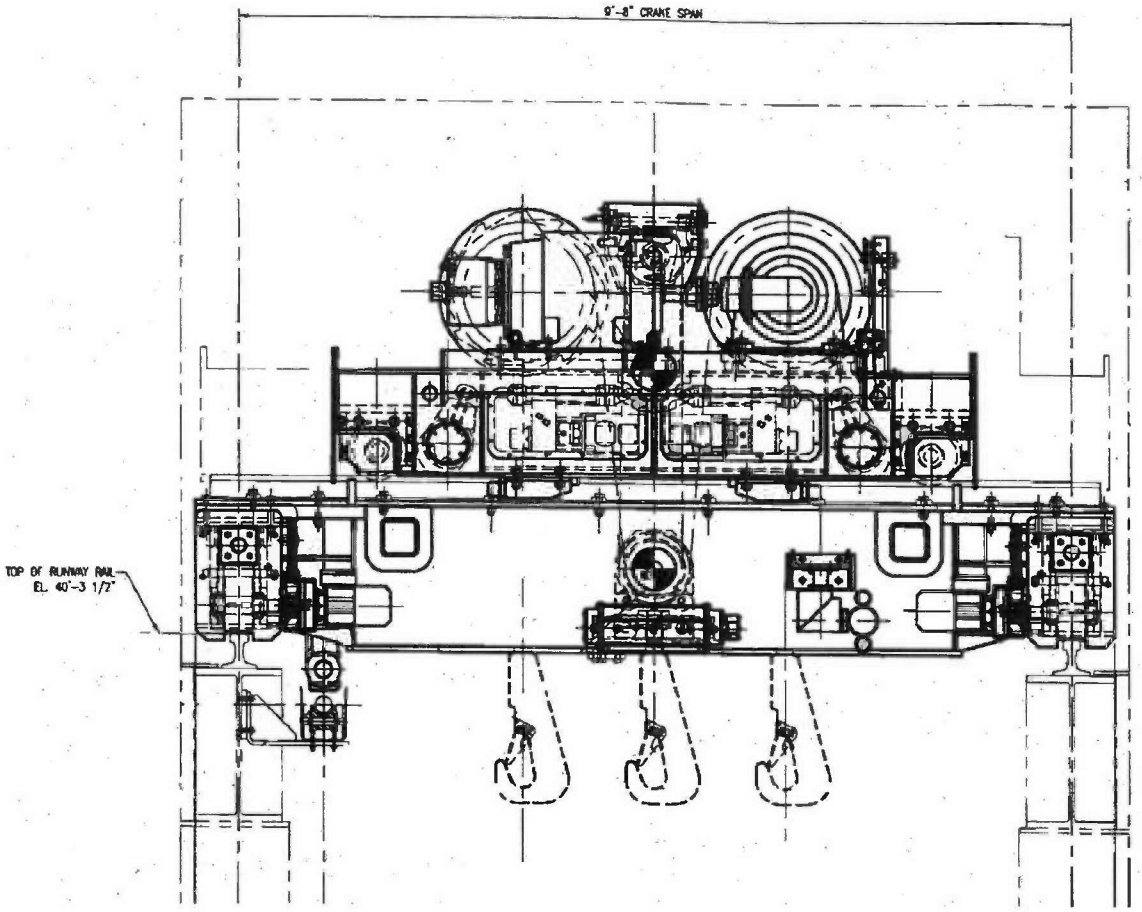

4.1.1.6.1.2 Maintenance Cranes

Component Tag Number: *24590-HLW-MJ-HDH-CRN-00002*
Component Tag Number: *24590-HLW-MJ-HDH-CRN-00004*
Component Tag Number: *24590-HLW-MJ-HDH-CRN-00006 (Jib Crane)*
Component Tag Number: *24590-HLW-MJ-HDH-CRN-00007 (Jib Crane)*

Refer to: 24590-WTP-3PS-MJKG-T0002, *Engineering Specification for CMAA 74 Top Running and Under Running Single Girder & CMAA 70 Top Running Bridge & Gantry Type Multiple Girder EOT Cranes*

Refer to: 24590-WTP-3PS-MJKH-T0001, *Engineering Specification for Commercial Quality Monorail Hoists, Jib Cranes, and Under Running Single Girder Cranes*

The maintenance cranes are either manual pendant/radio controlled, under running, single girder bridge or wall mounted jib cranes. Crane details are as follows:

Rinse bogie maintenance area lower crane (HDH-CRN-00002): 5 Ton SWL (safe working load), pendant controlled. Main hoist has a two speed 10/32 ft/min drive, bridge drive is a two speed 10/30 ft/min, and the trolley has a two speed 10/30 ft/min drive. See Figure 4-7. (24590-CM-POA-MJKG-00002-06-01)

Rinse bogie maintenance area upper crane (HDH-CRN-00004): 5 Ton SWL, digital radio controlled. Main hoist has a two speed 10/34 ft/min drive, bridge drive is a two speed 10/30 ft/min, and the trolley has a two speed 10/30 ft/min drive. See Figure 4-7. (24590-CM-POA-MJKG-00002-07-01)

Decontamination cave crane maintenance area west jib crane (HDH-CRN-00006): 5 Ton SWL, pendant controlled. Main hoist has a two speed 4/16 ft/min drive, trolley drive is a two speed 10/30 ft/min, and a 2 speed slewing motor drive of 0.25/0.5 rpm. See Figure 4-8. (24590-CM-POA-MJKH-00002-01-00001)

Decontamination cave crane maintenance area east jib crane (HDH-CRN-00007): 5 Ton SWL digital radio controlled. Main hoist has a two speed 4/16 ft/min drive, trolley drive is a two speed 10/30 ft/min, and a 2 speed slewing motor drive of 0.25/0.50 rpm. See Figure 4-8. (24590-CM-POA-MJKH-00002-01-00002)

The maintenance cranes are used to assist in all maintenance activities in the bogie and crane maintenance areas. Slow down limit switches protect the bridge and trolley near the ends of their maximum travel from impacting the end stops. The maintenance cranes are located in areas that meet ALARA criteria to allow access of personnel to inspect critical crane components prior to use and support maintenance activities. Permanently lubricated, sealed for life components are used where ever possible, when not, lubrication systems are designed to be accessible to aid maintenance from the adjacent maintenance platform.

Figure 4-7: Rinse Bogie Maintenance Area Crane

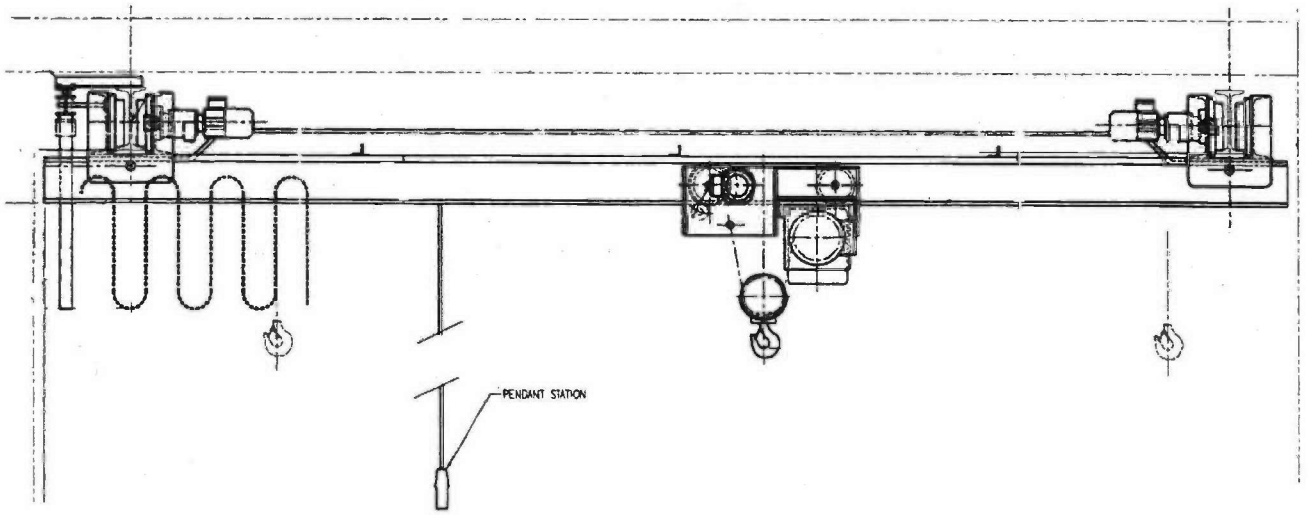

Figure 4-8: Crane Maintenance Area Jib Crane

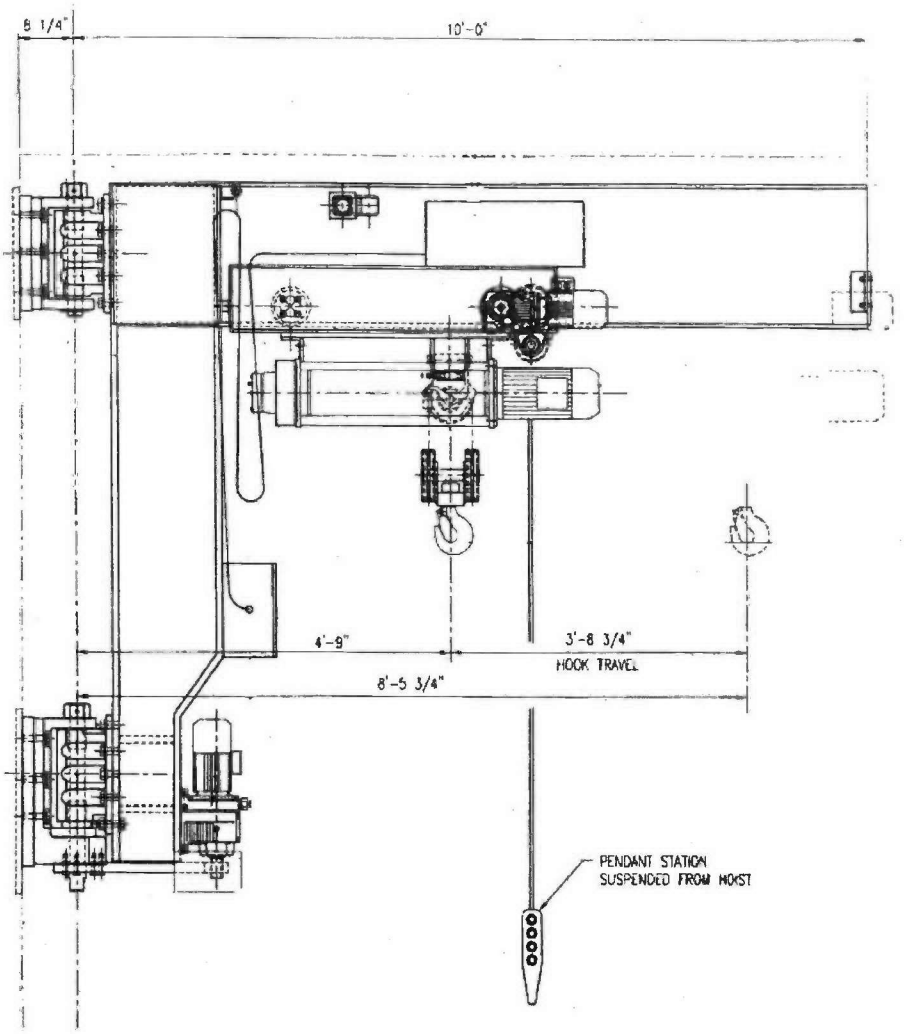

4.1.1.6.1.3 Shield Doors

4.1.1.6.1.3.1 Decontamination Cave Crane Maintenance Area Shield Door

Component Tag Number: *24590-HLW-AD-HDH-DOOR-00002*

Refer to: 24590-WTP-3PS-ADDH-T0006: *Engineering Specification for QL Crane Maintenance Shield Doors for HLW and PTF*

The shield door (Safety Significant, seismic SC-II) (24590-HLW-M0X-M40T-00001) [3.4.2.1, 3.4.1.2.5] is located between the decontamination cave and the Crane Maintenance Area (CMA) to provide shielding and confinement to protect personnel in the CMA from exposure to the C3/R3/R5 decontamination cave. The shield door allows passage of the decontamination cave crane, and any equipment it may carry, between the

decontamination cave and the CMA, where decontamination and maintenance activities can be performed. [ALARA]

The shield door is fabricated from 11 inch thick carbon steel (24590-QL-POA-ADDH-00007-05-00894) [3.10.2.3], which provides radiological shielding and aids contamination control by regulating the airflow from areas of lower contamination potential into areas of higher contamination potential. Air flow is controlled around the doors by air gap plates, which are adjusted to provide the required airflow for HVAC requirements.

The door is raised and lowered on a pair of roller screws, driven by a single reversible electric motor located in a personnel accessible area. [3.4.2.2] The door raising and lowering operations are failsafe; a brake assembly being attached to each of the roller screws. The brakes engage when power is lost to the drive system and the shield door is capable of recovery to the closed position without personnel entry into the maintenance area. [3.10.4.3] The door is guided on rails located in the CMA. Provisions are made for the safe recovery, replacement, and/or redundancy of components such as the guide rollers and rails which are adjustable and replaceable when the door is in the closed position. The shield door arrangement is shown in Figure 4-9. (24590-QL-POA-ADDH-00007-05-00894)

Figure 4-9: Crane Maintenance Shield Door

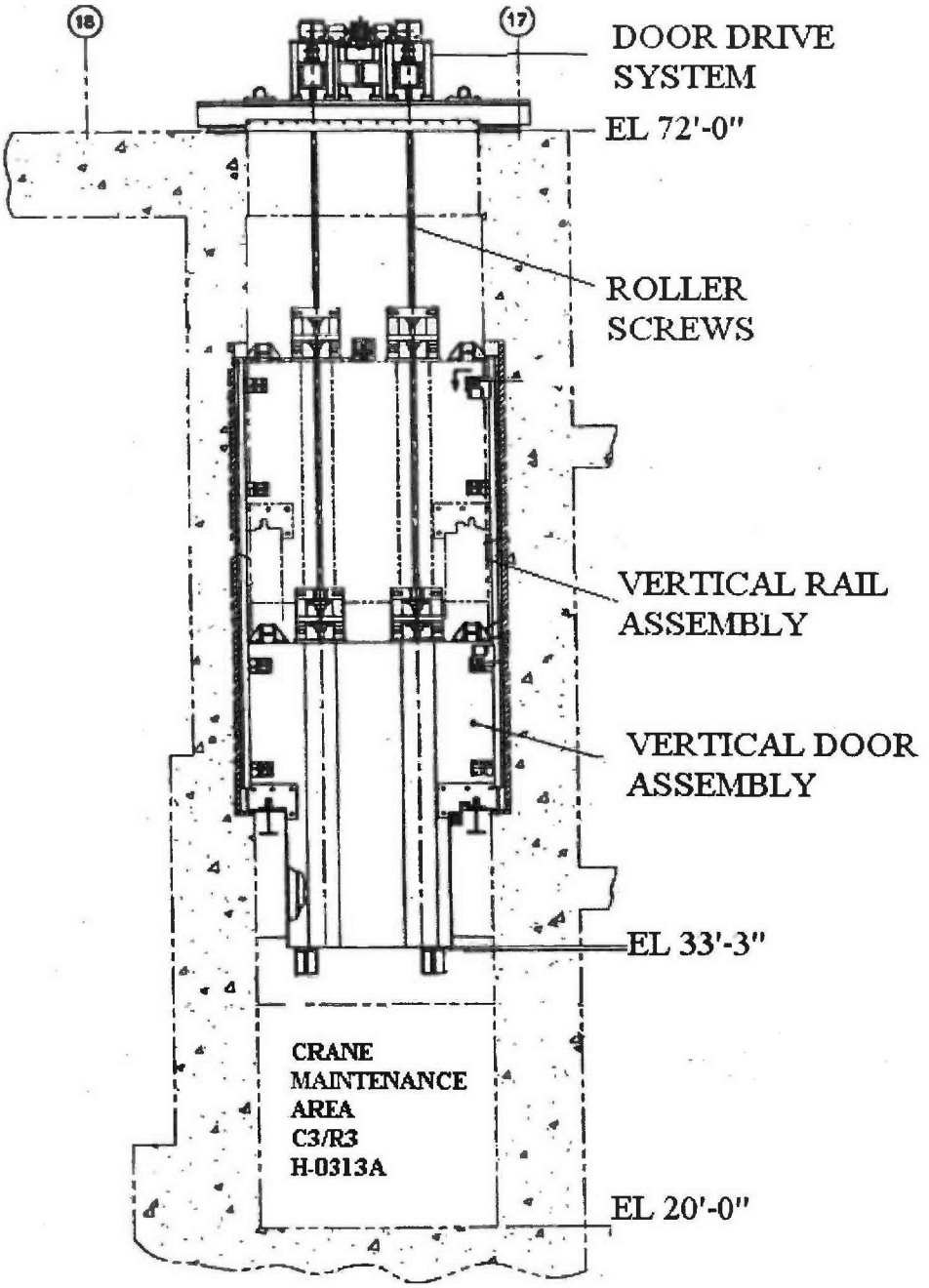

4.1.1.6.1.3.2 Rinse Bogie Maintenance Shield Door

Component Tag Number: *24590-HLW-AD-HDH-DOOR-00001*

Refer to: 24590-WTP-3PS-ADDH-T0001, *Engineering Specification for HLW/PTF Bogie Shield Doors*

The rinse bogie leaves the canister rinse tunnel (H-B039B) through the rinse bogie maintenance shield door, and enters an adjoining room (H-B039A) where decontamination and maintenance activities can be performed. The shield door allows the bogie to travel between the operations and maintenance areas and, when closed, provides radiological shielding to protect personnel and equipment positioned inside the maintenance areas. [ALARA]

The shield door (Safety Significant, seismic SC-II) (24590-HLW-M0X-M40T-00001) [3.4.2.1, 3.4.1.2.5] aids contamination control by regulating the airflow from areas of lower contamination potential into areas of higher contamination potential. Air flow is controlled around the doors by air gap plates, which are adjusted to provide the required airflow for HVAC requirements. The door is 11 inch thick steel for shielding (24590-QL-POA-ADDH-00006-05-318) [3.10.2.3].

The horizontal door is suspended by a rail located above the door. Drive is provided by a roller screw, driven by a single reversible electric motor located in the maintenance area, which is personnel accessible [3.4.2.2]. In the event of failure, the shield door is capable of recovery to the closed position without personnel entry into the maintenance area. [3.10.4.3] The horizontal door also is guided along its bottom edge by a guide system attached to the underside of the vertical door. For the door to resist the environment of the rinse tunnel and to aid in the decontamination of the tunnel side of the shield door, it is clad in stainless steel, a material resistant to aggressive decontamination methods. See Figure 4-10. (24590-QL-POA-ADDH-00006-05-317 and 320)

Figure 4-10: Rinse Bogie Maintenance Shield Door

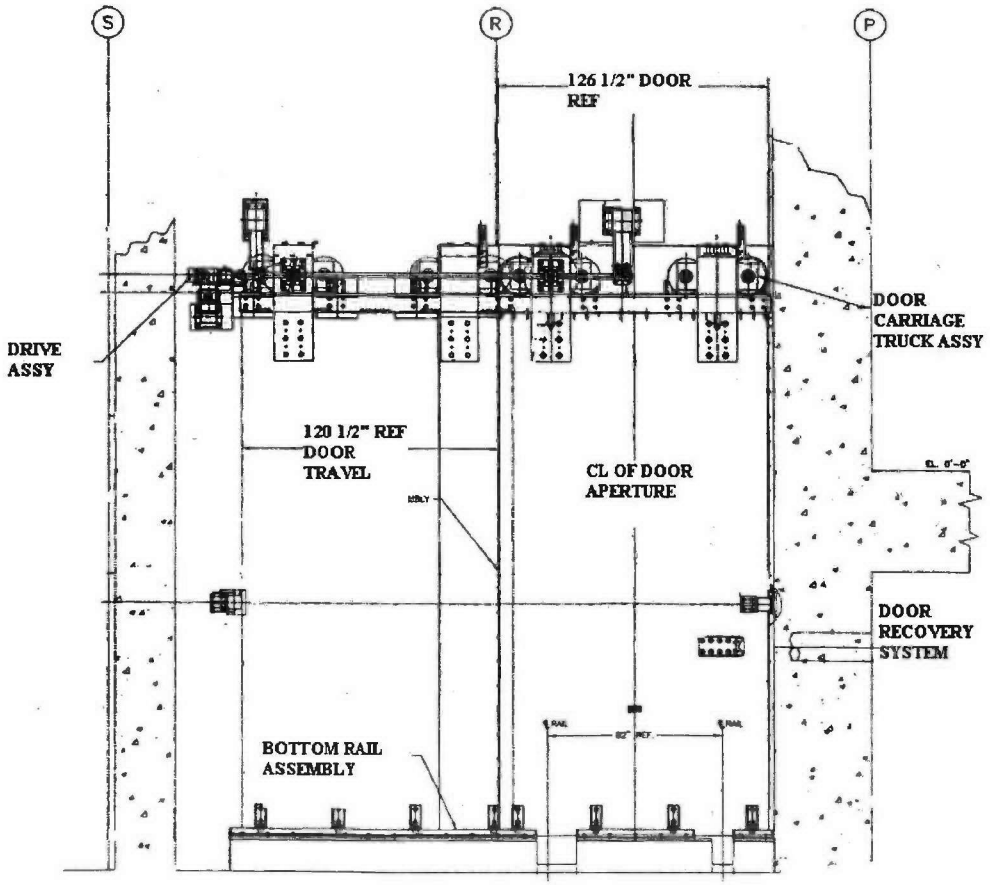

4.1.1.6.1.3.3 Shielded Personnel Access Door (SPAD) 12 inch Thick

Component Tag Number: *24590-HLW-AD-HDH-DOOR-00003 and 24590-HLW-AD-HDH-DOOR-00006*

Refer to: 24590-HLW-3PS-MX00-T0001, *Engineering Specification for QL Shielded Personnel Access Doors* and data sheets 24590-HLW-MXD-30-00012 and 00167

The storage transfer tunnel SPAD (HDH-DOOR-00003) provides maintenance access into the storage transfer tunnel (H-B037B) from the sub-change (H-B037A) at floor elevation −31 ft. The canister decontamination cave SPAD (HDH-DOOR-00006) provides maintenance access into the canister decontamination cave (H-0133) from the sub-change (H-0131A) at floor elevation +3 ft. The 12 inch thick steel (24590-QL-POA-ADDB-00001-09-01 or 43) [3.10.2.3] SPA doors (Safety Class, seismic SC-I) (24590-HLW-M0X-M40T-00001) [3.4.2.1, 3.4.1.2.5] shield personnel from potential radiation and contamination present in the storage transfer tunnel or the canister decontamination cave during normal operations.

The SPAD is fitted with a combined latch/vacuum-breaking lever (on each side of the door) that both releases the door and provides mechanical advantage to overcome HVAC pressure acting on the door. The latch/vacuum breaking lever also provides means for emergency egress or access from the area in the event of a fire or emergency. The latch is fitted with a padlock that is used for locking the door in the open or closed position [3.10.2.2]. The SPAD includes a damping system that controls deceleration at end of door swing, both opening and closing. This reduces trapping hazards, and prevents overloading of the bump stops and hinges. (24590-QL-POA-ADDB-00001-09-00077 and 01 or 43) See Figure 4-11.

Figure 4-11: 12 inch Shielded Personnel Access Door

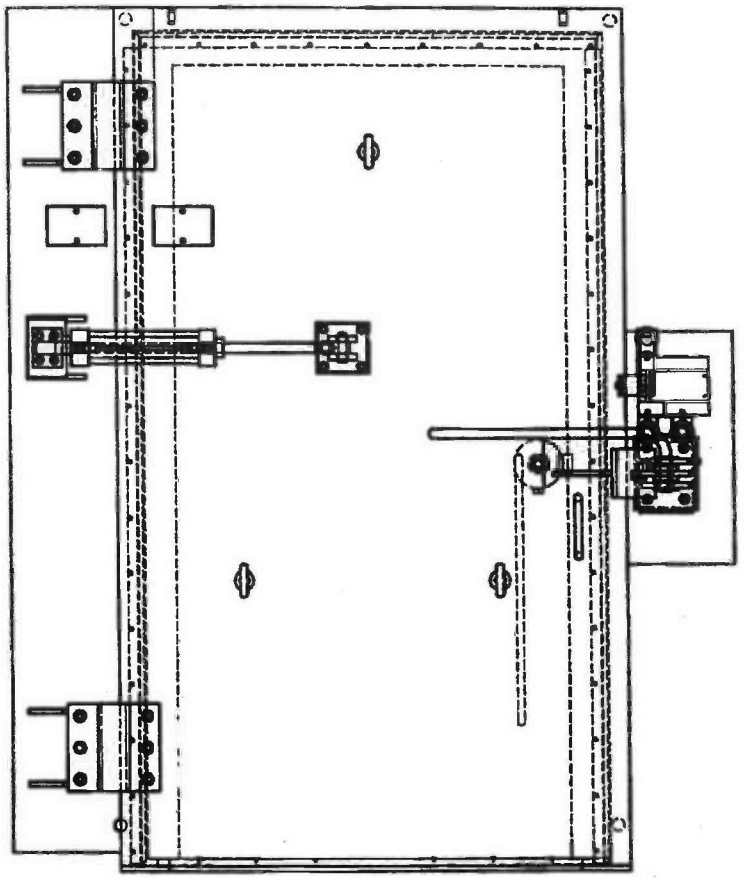

4.1.1.6.1.3.4 Shielded Personnel Access Door (SPAD) 3 inch Thick

Component Tag Number: *24590-HLW-AD-HDH-DOOR-00004 and 24590-HLW-AD-HDH-DOOR-00005*

Refer to: 24590-HLW-3PS-MX00-T0001, *Engineering Specification for QL Shielded Personnel Access Doors* and data sheets 24590-HLW-MXD-30-00015 and 00028

The rinse bogie maintenance area SPAD (HDH-DOOR-00004) provides maintenance access into the rinse bogie maintenance area (H-B039A) from the sub-change (H-B039) at floor elevation −16 ft (door threshold elevation is at −15 ft). The decontamination cave crane maintenance area SPAD (HDH-DOOR-00005) provides maintenance access into the decontamination cave crane maintenance area (H-0313A) from the sub-change (H-0313) at floor elevation +37 ft. The 3 inch thick steel (24590-QL-POA-ADDB-00001-09-29) [3.10.2.3] SPA doors (Safety Class, seismic SC-I) (24590-HLW-M0X-M40T-00001) [3.4.2.1, 3.4.1.2.5] shield personnel from potential radiation and contamination present in the rinse bogie maintenance area or the decontamination cave crane maintenance area during normal operations.

The SPAD is fitted with a combined latch/vacuum-breaking lever (on each side of the door) that both releases the door and provides mechanical advantage to overcome HVAC pressure acting on the door. The latch/vacuum breaking lever also provides means for emergency egress or access from the area in the event of a fire or

emergency. The latch is fitted with a padlock that is used for locking the door in the open or closed position [3.10.2.2]. The SPAD includes a damping system that controls deceleration at end of door swing, both opening and closing. This reduces trapping hazards, and prevents overloading of the bump stops and hinges. See Figure 4-11 for typical SPAD arrangement. (24590-QL-POA-ADDB-00001-09-00077 and 29)

4.1.1.6.1.3.5 Decontamination Cave Airlock Door

Component Tag Number: *24590-HLW-AD-HDH-DOOR-00007*

Refer to: 24590-LAW-3PS-ADDM-T0003, *Engineering Specification for LAW Bogie and Monorail Shield Doors*

The decontamination cave airlock door (Non-Safety, seismic SC-IV) (24590-HLW-M0X-M40T-00001) controls airflow from the corridor H-0131, through sub-change (H-0131A), into the decontamination cave (H-0133) during entry into the cave for maintenance activities. This door is closed while the decontamination cave SPAD (HDH-DOOR-00006) is opened.

The door is a manually operated sliding door suspended from a horizontal wall mounted guide rail. Guides for the lower edge of the door are mounted to embed plates in the floor. The door is fitted with elastomeric seals along the entire door perimeter to provide an air tight seal when closed. A cam operated breaker bar is used to open/unseal the door for man access from both sides. See Figure 4-12. (24590-CM-POA-ADDH-00005-06-00260)

Figure 4-12: Airlock Door

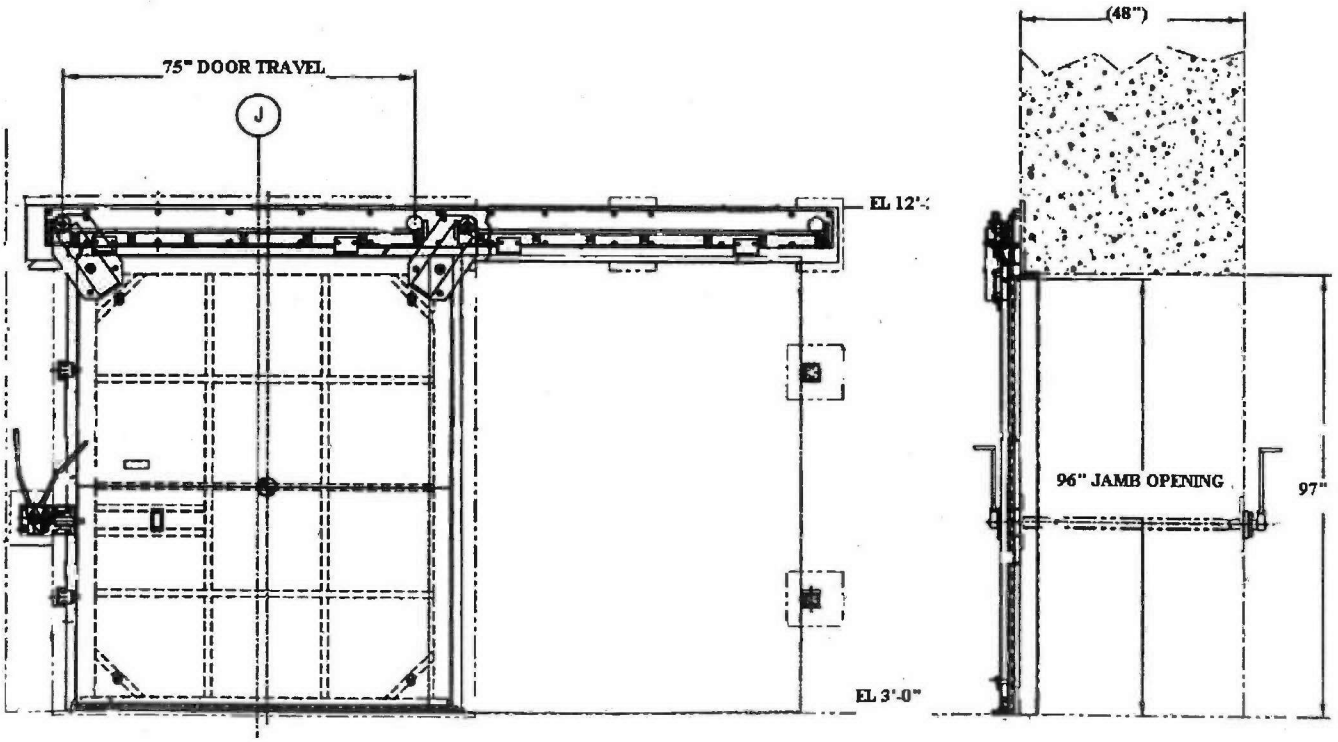

4.1.1.6.1.4 Transfer Bogies and Components

Bogies are four-wheeled carts that travel on rails. They are utilized in several different areas inside the various WTP facilities to transport maintenance equipment and canisters containing radioactive material from one specific location to another.

4.1.1.6.1.4.1 Canister Rinse Bogie

Component Tag Number for Bogie: *24590-HLW-MQ-HDH-TRLY-00003*
Component Tag Number for Bogie Rails: *24590-HLW-MH-HDH-RAIL-00002*
Component Tag Number for Rinse Vessel: *24590-HLW-MV-HDH-VSL-00001*
Component Tag Number for Rinse Vessel Service Track: *24590-HLW-MH-HDH-MHAN-00017*

Refer to: 24590-HLW-3PS-MQR0-T0002, *Engineering Specification for HLW System HDH Canister Rinse Bogie*

The canister rinse bogie, which is located in the canister rinse tunnel (H-B039B), transports filled and lidded canisters from the canister handling cave export hatch (HDH-HTCH-00003) to the intermediate position. The rinse vessel (HDH-VSL-00001) mounted on the bogie holds the canister and performs a rinse of the canister. After rinsing, the bogie transports the canister to a position below the canister decontamination cave import hatch (HDH-HTCH-00004). The bogie has the ability to leave the tunnel and enter an adjoining room (H-B039A) where maintenance activities on the bogie can be performed. A shield door separates the process and maintenance areas, and provides radiological shielding.

The bogie travels in the east-west direction, and is controlled via the MHJ. The bogie control system uses bogie-mounted proximity switches and a brake motor to control the process stopping positions of the bogie. The bogie is classified as non-safety, seismic SC-III. (24590-HLW-M0X-M40T-00001)

The canister rinse bogie vessel is designated as WAI (Passive). The reason for the passive WAI designation is that the canister could be damaged on parts of the vessel that contact the canister when lowering and raising the canister from the vessel. To ensure damage does not occur to the canister, the vessel contact points are profiled and have smooth surfaces to reduce scratching to a minimum. (24590-HLW-WSF-ENG-07-002)

The canister rinse bogie is modular in design to aid maintenance (e.g. modular wheel blocks are easily replaced and maintained) [3.5.4.7], and the framework is designed to eliminate potential contamination traps where practical. The bogie is powered by an on board geared motor and travels on a pair of floor mounted stainless steel rails. A pair of wall-mounted seismic stainless steel rails are mounted on embeds located on the north and south walls of the rinse tunnel. In conjunction with the bogie restraints, they prevent the bogie from overturning or derailing in the event of wheel failure, or during a seismic event.

Two service tracks (HDH-MHAN-00017) provide electrical and process services (water and air) to the bogie and vessel. The bogie is disconnected from the service track at the door aperture prior to transferring the bogie into the maintenance area. An electrical supply from the maintenance area is connected to the bogie to provide power to the motor to allow passage into the maintenance power. This procedure is ALARA to prevent bringing the potentially contaminated service track into the maintenance area.

The bogie is equipped with an ultimate-travel limit switch to prevent collision with the rail end stops in the event of a proximity (positioning) switch failure. The canister rinse bogie is capable of traveling at 10 ft/min normal and ramps down to 3 ft/min creep speed (to be determined during checkout testing) when approaching a station. (24590-QL-POA-MQTS-00002-08-00001) An engineered air gap is provided between the top of the rinse vessel

and the import and export hatch spool pieces to ensure air flows from areas of lower contamination potential into areas of higher contamination potential (from the canister decontamination cave to the rinse tunnel to the canister handling cave). [ALARA]

The bogie is designed to have a nominal plant life of 40 years to minimize worker exposure by reducing maintenance and replacement activities. [3.4.1.2.1] Where consumable or commercially available components (e.g. bearings, seals etc.) do not have a design life of 40 years, those items are designed to be replaceable. In the event of bogie drive failure, the bogie can be recovered back into the maintenance area (after removing the canister) by operating the bogie recovery winch (HDH-RCVY-00009) [3.5.4.4] located in the maintenance area. [3.4.2.2] See Figure 4-13. (24590-QL-POA-MQTS-00002-01-148 and -00245)

The canister rinse bogie vessel (HDH-VSL-00001) is discussed in section Figure 4-13.

Figure 4-13: Canister Rinse Bogie and Vessel

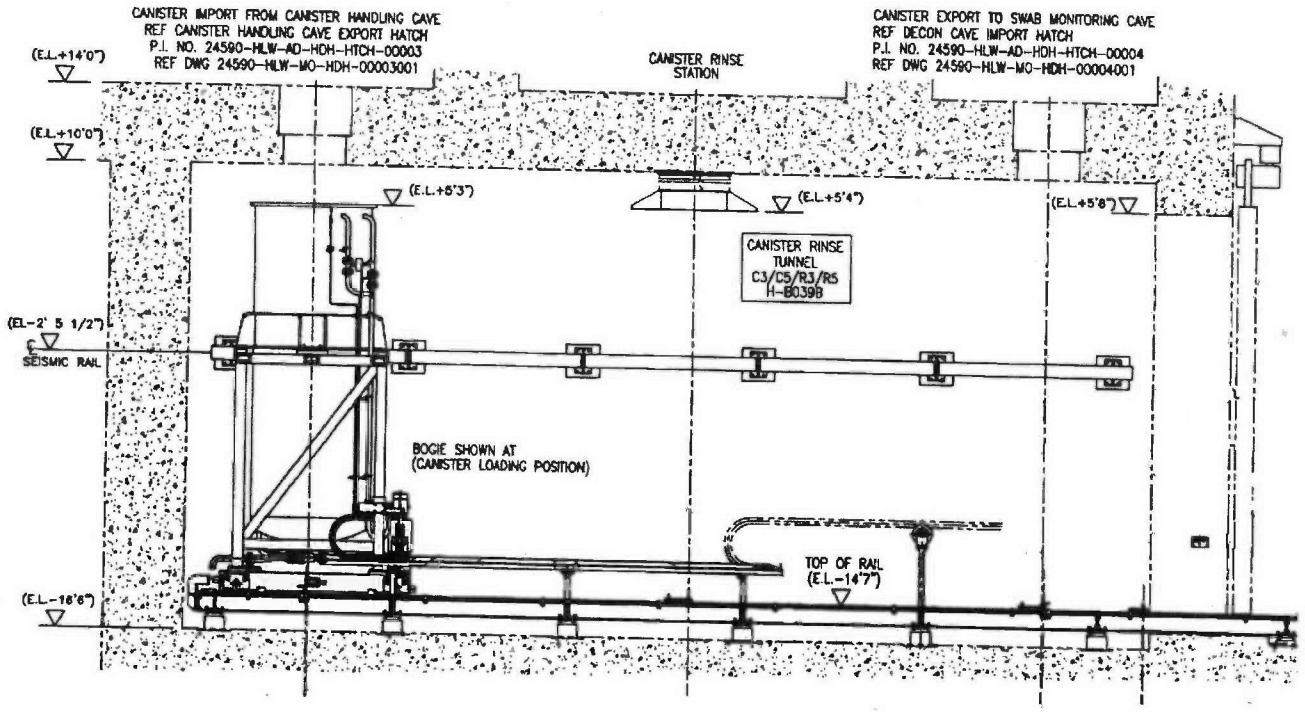

4.1.1.6.1.4.2 Canister Storage Transfer Bogie

Component Tag Number for Bogie: *24590-HLW-MQ-HDH-TRLY-00004*
Component Tag Number for Bogie Rails: *24590-HLW-MH-HDH-RAIL-00003*

Refer to: 24590-WTP-3PS-MQR0-T0002, *Engineering Specification for HLW Standardized Bogies*

The canister storage transfer bogie operates in the canister storage transfer tunnel (H-B037B). The bogie transfers canisters from a location below the canister decontamination cave export hatch (HDH-HTCH-00002) to a location below the canister storage cave import hatch (HEH-HTCH-00004), where the canister is lifted from the tunnel to the storage cave (interfacing system HEH).

The bogie is of an elevated design, utilizing an on board motor drive with an integral canister support frame, and is classified as Non-Safety, seismic SC-II (24590-HLW-M0X-M40T-00001), due to being on elevated rails (standard American Society of Civil Engineers (ASCE) rails). The bogie operates in a high radiation environment, transporting decontaminated IHLW canisters.

The canister storage transfer bogie is designated as WAI (Passive). The reason for the passive WAI designation is that the canister could be damaged on parts of the bogie that contact the canister when lowering and raising the canister from the bogie. To ensure damage does not occur to the canister, the bogie sleeve contact points are profiled and have smooth surfaces to reduce scratching to a minimum. (24590-HLW-WSF-ENG-07-003)

The bogie travels in the east/west direction, and is controlled via the MHJ. The bogie control system uses bogie-mounted proximity switches and a brake motor to control the process stopping positions of the bogie. The bogie is equipped with an ultimate-travel limit switch to prevent collision with the rail end stops in the event of a proximity (positioning) switch failure. The canister storage transfer bogie is capable of traveling at 10 ft/min normal and 3 ft/min creep speed. The bogie is equipped with an on board camera and light for viewing the canister grapple interface during canister transfer operations.

The bogie is designed to have a nominal plant life of 40 years to minimize worker exposure by reducing maintenance and replacement activities. [3.4.1.2.1] Where consumable or commercially available components (e.g. bearings, seals, etc.) do not have a design life of 40 years, those items are designed to be easily replaceable. In the event of bogie drive failure, the bogie can be recovered back into the maintenance platform position (after removing the canister) by operating the bogie recovery winch (HDH-RCVY-00007) located at the east end of the tunnel. [3.5.4.4, 3.4.2.2] The winch has a through wall drive (HDH-TWDVC-00008) located outside of the tunnel in the corridor for accessibility. The bogie is modular in design to aid maintenance (e.g. modular wheel blocks are easily replaced and maintained) [3.5.4.7], and framework designed as to eliminate contamination traps where practical to ease decontamination. See Figure 4-14. (24590-QL-POA-MQTS-00001-05-00436)

Figure 4-14: Storage Tunnel Transfer Bogie

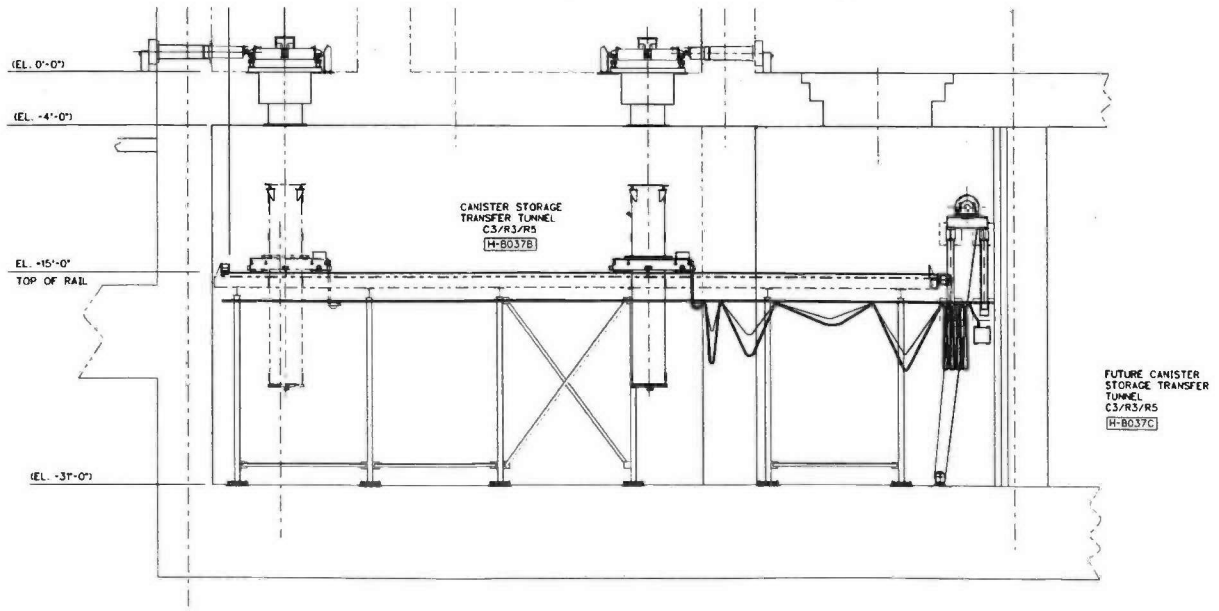

4.1.1.6.1.5 Hatches

4.1.1.6.1.5.1 Decontamination Cave Export Hatch

Component Tag Number for Hatch: *24590-HLW-AD-HDH-HTCH-00002*
Component Tag Number for Drive: *24590-HLW-MJ-HDH-DRIV-00005*

Refer to: 24590-WTP-3PS-ADDC-T0002, *Engineering Specification for HLW System Transfer Hatches, Hatch Drives, Hatch Pushrod Assemblies, and Floor Penetration Liners*

The decontamination cave export hatch is located in the canister decontamination cave (H-0133) at the north end of the cave on the 0 ft elevation. The hatch is classified as Safety Significant (SS), seismic class SC-II [3.4.2.1, 3.4.1.2.5]. The through wall drive is classified as Safety Significant (SS), seismic class SC-III, the bolts and load path components that hold the through wall assembly in place are Safety Class (SC), seismic class SC-I. The safety function is that the hatch and through wall drive remain in place during a seismic event (24590-HLW-M0X-M40T-00001).

The hatch is 9.88 inch thick (minimum) steel for shielding (24590-HLW-M0-HDH-00004001) [3.10.2.3]. The export hatch is a rack and pinion driven, horizontally traveling hatch that runs on rails to allow the canister to travel between the canister decontamination cave and the canister storage transfer tunnel. Normally, the hatch is in the closed position to provide radiological shielding [ALARA] and regulate airflow. The decontamination cave export hatch and the facility ventilation system maintain pressure differentials to ensure air flows from areas of lower contamination potential into areas of higher contamination potential. An adjustable engineered air gap between the underside of the hatch cover and the top of its floor penetration liner allows the airflow to be adjusted.

The hatch is designed to have a nominal plant life of 40 years to minimize worker exposure by reducing maintenance and replacement activities. Where consumable or commercially available components do not have a design life of 40 years [3.4.1.2.1][ALARA], (e.g. wheel blocks, through wall drive 'O' ring seals, and instrumentation) those items are designed to be easily replaceable in the event of component failure.

The hatch is remotely opened and closed using a through wall drive and position indicator system. For ease of maintenance the through wall drive and proximity switches (HDH-DRIV-00005) are located out-cave in the adjacent corridor (HC0206), through the west wall of the canister decontamination cave at the 0 ft elevation. [3.4.2.2]. The hatch drive (controlled by the MHJ) operates the hatch in the north or south direction, and is designed to travel at a nominal speed of 10 ft/min (to be verified, spec requirement is hatch opens/closes in < 0.9 minutes). End stops are provided to prevent over travel. The hatch (in-cave) can be remotely moved to the maintenance area using the canister decontamination cave crane. See Figure 4-15 and Figure 4-16 for hatch and drive assembly and location. (24590-QL-POA-ADDH-00003-06-00126)

4.1.1.6.1.5.2 Canister Handling Cave Export Hatch

Component Tag Number for Hatch: *24590-HLW-AD-HDH-HTCH-00003*
Component Tag Number for Drive: *24590-HLW-MJ-HDH-DRIV-00003*

Refer to: 24590-WTP-3PS-ADDC-T0002, *Engineering Specification for HLW System Transfer Hatches, Hatch Pushrod Assemblies, and Floor Penetration Liners*

The canister handling cave export hatch is located in system HPH canister handling cave (H-0136) at the east end of the cave on the +14 ft elevation. The hatch is classified as Safety Significant (SS), seismic class SC-II [3.4.2.1,

3.4.1.2.5]. The through wall drive is classified as Safety Significant (SS), seismic class SC-III, the bolts and load path components that hold the through wall assembly in place are Safety Class (SC), seismic class SC-I. The safety function is that the hatch and through wall drive remain in place during a seismic event. (24590-HLW-M0X-M40T-00001)

The export hatch is a rack and pinion driven, horizontally traveling hatch that runs on rails to allow the canister to travel between the canister handling cave and the canister rinse tunnel. Normally, the hatch is in the closed position to provide radiological shielding and regulate airflow. The canister handling cave export hatch and the facility ventilation system maintain pressure differentials to ensure air flows from areas of lower contamination potential into areas of higher contamination potential. An adjustable engineered air gap between the underside of the hatch cover and the top of its floor penetration liner allows the airflow to be adjusted. [3.10.1.1][ALARA]

The hatch is designed to have a nominal plant life of 40 years [3.4.1.2.1] to minimize worker exposure by reducing maintenance and replacement activities. Where consumable or commercially available components do not have a design life of 40 years, (e.g. wheel blocks, through wall drive 'O' ring seals, and instrumentation) those items are designed to be replaceable in the event of component failure.

The hatch is remotely opened and closed using a through wall drive and position indicator system. For ease of maintenance the through wall drive and proximity switches (HDH-DRIV-00003) are located out-cave in the adjacent corridor (HC0206), through the east wall of the canister handling cave at the +14 ft elevation. [3.4.2.2] The hatch drive (controlled by the MHJ) operates the hatch in the north or south direction, and is designed to travel at a nominal speed of 10 ft/min (spec requirement is that hatch opens/closes in < 0.9 minutes). End stops are provided to prevent over travel. The hatch (in-cave) can be remotely moved to the maintenance area using the canister handling cave crane. See Figure 4-15 and Figure 4-16 for hatch and drive assembly and location. (24590-QL-POA-ADDH-00003-06-00126)

4.1.1.6.1.5.3 Canister Decontamination Cave Import Hatch

Component Tag Number for Hatch: *24590-HLW-AD-HDH-HTCH-00004*
Component Tag Number for Drive: *24590-HLW-MJ-HDH-DRIV-00002*

Refer to: 24590-WTP-3PS-ADDC-T0002, *Engineering Specification for HLW System Transfer Hatches, Hatch Pushrod Assemblies, and Floor Penetration Liners*

The canister decontamination cave import hatch is located in the decontamination cave (H-0133) at the south end of the cave on the +14 ft elevation. The hatch is classified as Safety Significant (SS), seismic class SC-II [3.4.2.1, 3.4.1.2.5]. The through wall drive is classified as Safety Significant (SS), seismic class SC-III, the bolts and load path components that hold the through wall assembly in place are Safety Class (SC), seismic class SC-I. The safety function is that the hatch and through wall drive remain in place during a seismic event. (24590-HLW-M0X-M40T-00001)

The hatch is 9.88 inch thick (minimum) steel for shielding (24590-HLW-M0-HDH-00004001) [3.10.2.3]. The import hatch is a rack and pinion driven, horizontally traveling hatch that runs on rails to allow the canister to travel between the canister rinse tunnel and the canister decontamination cave. Normally, the hatch is in the closed position to provide radiological shielding [ALARA] and regulate airflow. The canister decontamination cave import hatch and the facility ventilation system maintain pressure differentials to ensure air flows from areas of lower contamination potential into areas of higher contamination potential. An adjustable engineered air gap between the underside of the hatch cover and the top of its floor penetration liner allows the airflow to be adjusted.

The hatch is designed to have a nominal plant life of 40 years to minimize worker exposure by reducing maintenance and replacement activities. Where consumable or commercially available components do not have a design life of 40 years, [3.4.1.2.1] (e.g. wheel blocks, through wall drive 'O' ring seals, and instrumentation) those items are designed to be replaceable in the event of component failure.

The hatch is remotely opened and closed using a through wall drive and position indicator system. For ease of maintenance, the through wall drive and proximity switches (HDH-DRIV-00002) are located out-cave in the adjacent corridor (HC0208), through the west wall of the canister handling cave at the +14 ft elevation. [3.4.2.2] The hatch drive (controlled by the MHJ) operates the hatch in the north or south direction, and is designed to travel at a nominal speed of 10 ft/min (to be verified). End stops are provided to prevent over travel. The hatch (in-cave) can be remotely moved to the maintenance area using the canister decontamination cave crane. See Figure 4-15 and Figure 4-16 for hatch and drive assembly and location. (24590-QL-POA-ADDH-00003-06-00033 and 00056)

Figure 4-15: Typical Transfer Hatch Assembly

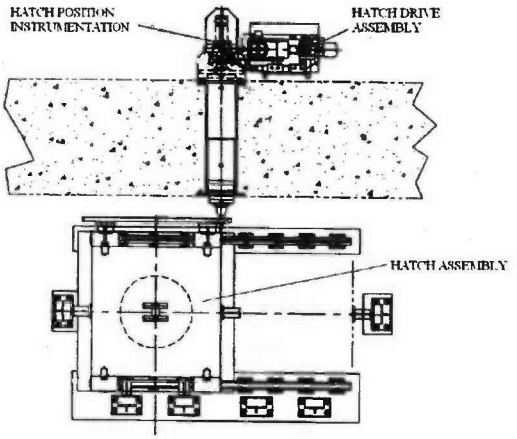

Figure 4-16: System HDH Hatch Locations

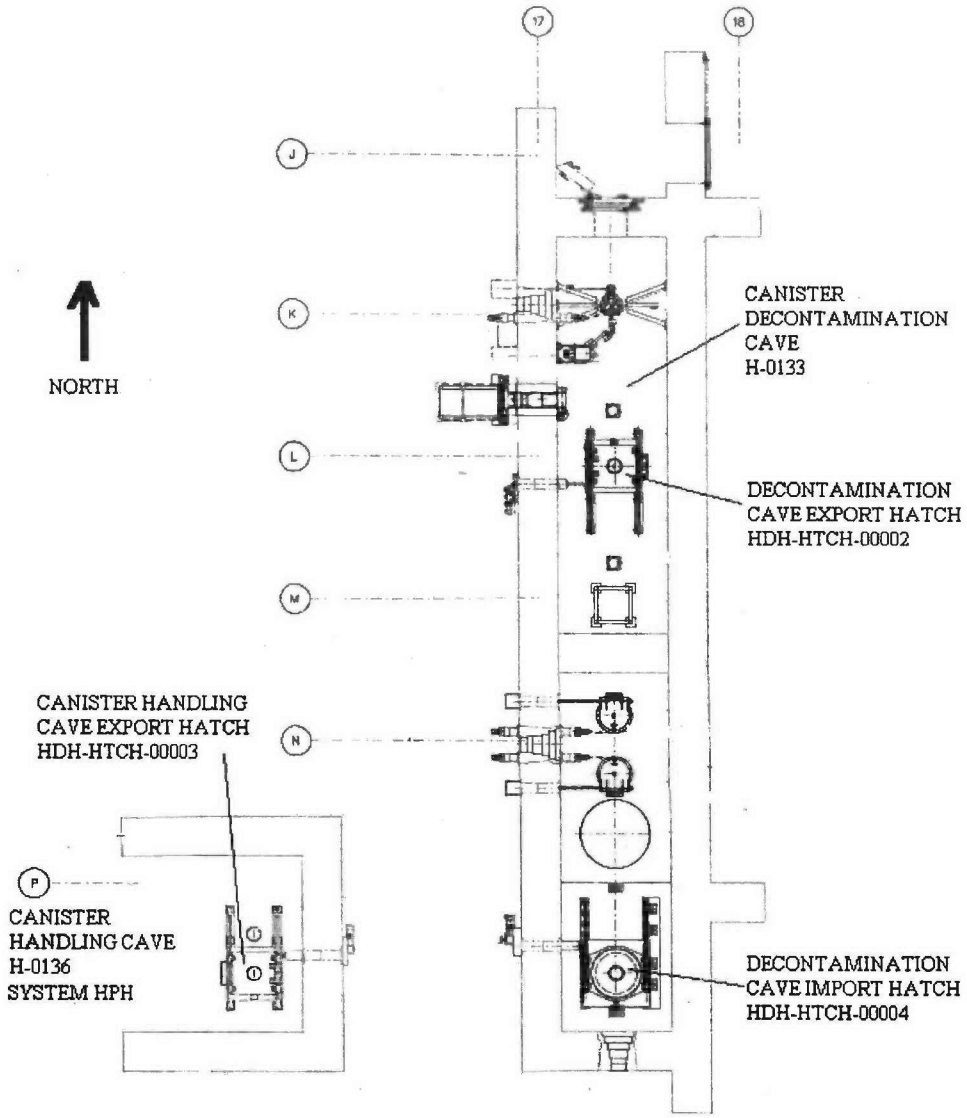

4.1.1.6.1.6 Decontamination Cave Components

4.1.1.6.1.6.1 Canister Grapples

Component Tag Number: *24590-HLW-FH-HDH-TOOL-00001 (Clean grapple)*
Component Tag Number: *24590-HLW-FH-HDH-TOOL-00004 (Dirty grapple)*

Refer to: 24590-WTP-3PS-MQL0-T0003, *Engineering Specification for Special Grapples and Lifting Devices*

The canister grapple is designated as WAI (Performance and Passive). (24590-HLW-M0X-M40T-00001) The reason for the performance WAI designation is that the design requirements for the grapple are included 24590-

HLW-PL-RT-07-0001, IHLW Waste Form Compliance Plan, and provided in 24590-HLW-RPT-RT-08-001-05, Canister Description for Immobilized High Level Waste Product Qualification. The design of the grapple prevents an inadvertent release of the suspended canister; the grapple fingers cannot become disengaged from the canister flange during normal handling operations (two full set downs of the canister are required to release the fingers); the grapple is capable of being remotely engaged and disengaged from the HLW canister flange within a maximum diameter of 24.6 inch (62.5 cm) when attached to the crane hook. The reason for the passive WAI designation is to minimize damage to the canister by ensuring the grapple has a smooth profile and smooth surface finish to reduce scratching to a minimum, also the use of paint and liquid lubricants is minimized on the grapple to prevent the introduction of foreign materials into the canister. The full scope of WAI requirements applicable to the grapple are documented on waste acceptance impacting screening form 24590-HLW-WSF-ENG-07-003.

The decontamination cave canister grapples are mechanically actuated lifting devices used to transport canisters within system HDH and have a rated capacity safe working load of 10,000 lbs. (24590-HLW-M0X-M40T-00001). The nominal weight of a filled canister is 9260 lbs. The grapples are suspended from the 6-ton decontamination cave crane (HDH-CRN-00005) from their lifting bails. The grapple includes an indexing feature that requires two fully lowered set downs to open the fingers and disengage the canister. This feature prevents an inadvertent release of the canister during handling, for example, if the canister hits an obstruction during transport, or begins tipping due to an uneven set down surface. The grapple is fitted with indicators that signal when the fingers are in the open or closed position, and also indicate the indexing stage, that is, has one set down or two set downs been completed. (24590-QL-POA-FH00-00001-03-00007)

The configuration of the grapple fingers ensures that it is not possible to lift the canister unless all three fingers are fully engaged. The grapple is equipped with recovery means to retract the fingers from the canister should the normal disengagement mechanism fail. This disengagement is performed manually. The grapple is mainly fabricated of stainless steel to aid in decontamination and to improve durability of the mechanical components during the decontamination process [3.4.2.3]. The dirty grapple (HDH-TOOL-00004) is used to lift canisters from the rinse vessel to the decontamination vessel(s). Once the canister has been decontaminated, the clean grapple (HDH-TOOL-00001) is used to transfer the canister from the decontamination vessel(s) to the swabbing station. [3.8.2.1] See Figure 4-17.

Figure 4-17: Canister Grapple

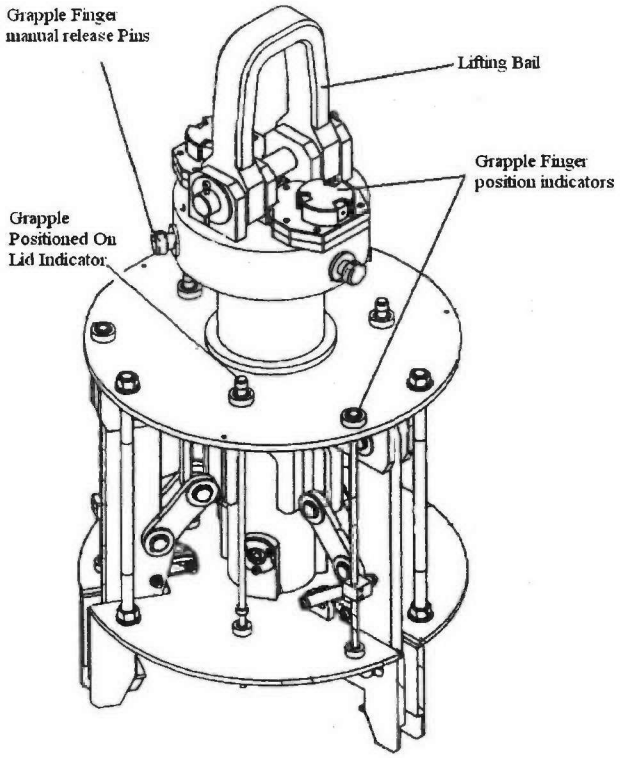

4.1.1.6.1.6.2 Grapple Stand

Component Tag Number: *24590-HLW-MH-HDH-MHAN-00004 (Crane maintenance area grapple stand)*
Component Tag Number: *24590-HLW-MH-HDH-MHAN-00013 (Clean grapple stand)*
Component Tag Number: *24590-HLW-MH-HDH-MHAN-00014 (Dirty grapple stand)*

Refer to: 24590-WTP-3PS-MQL0-T0003, *Engineering Specification for Special Grapples and Lifting Devices*

The three grapple stands are identical, they provide a stable location for set-down and storage of the canister grapple. The stand is fabricated from stainless steel which is resistant to decontamination agents [3.4.2.3]. (24590-QL-POA-FH00-00001-03-00001)

Figure 4-18: Canister Grapple Stand

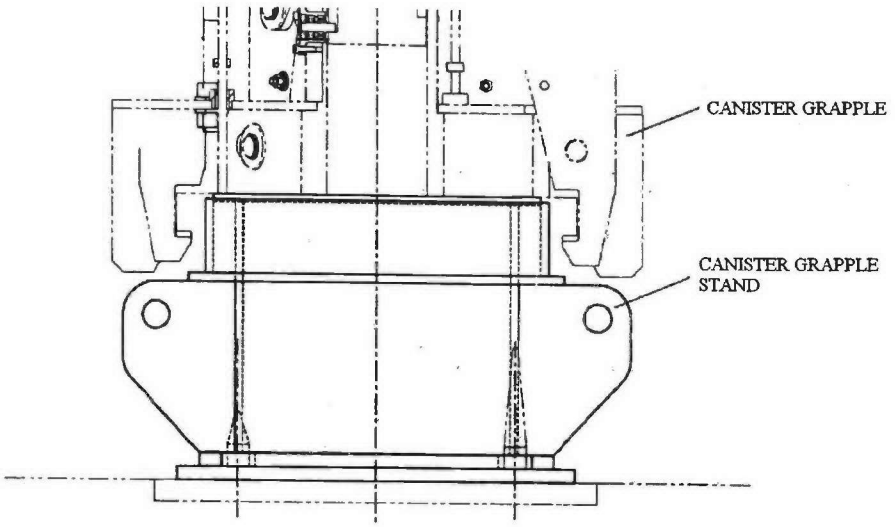

4.1.1.6.1.6.3 Canister Weight Load Cell

Component Tag Numbers: *24590-HLW-MH-HDH-MHAN-00026 and 00027*

Refer to: 24590-WTP-3PS-MQL0-T0003, *Engineering Specification for Special Grapples and Lifting Devices*

The load cells (also called dynamometers) are designated as WAI (Passive). The passive attribute is that the load cell design is suitable for the application and environment for which it is proposed; see CCN 215524 "Passive Item Screening" and waste acceptance impacting screening form 24590-HLW-WSF-ENG-07-002.

The load cell assembly is attached between the decontamination cave crane hook and canister grapple. The operator reads the load cell display through a shield window or with the CCTV.

Figure 4-19: Canister Weight Load Cell

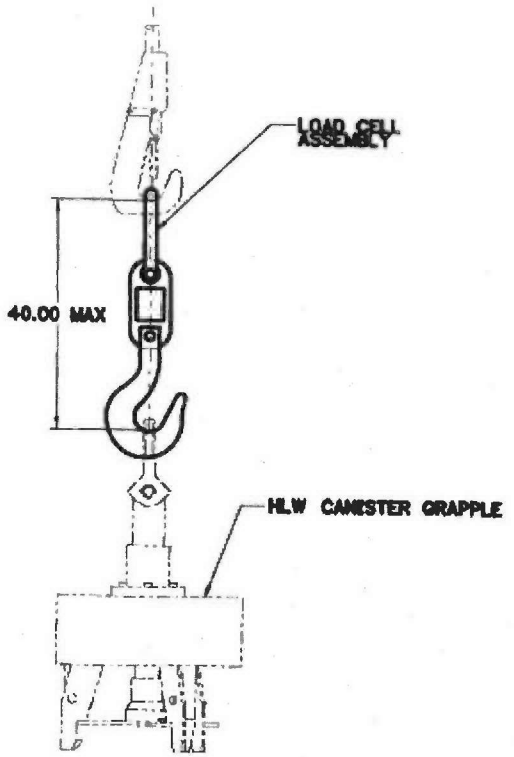

4.1.1.6.1.6.4 Decontamination Cave Canister Storage Rack

Component Tag Number: *24590-HLW-MH-HDH-MHAN-00006*

Refer to: 24590-HLW-3PS-30-T0001, *Engineering Specification for HLW Canister Racks*

The decontamination cave canister storage rack is designated as WAI (Passive). (24590-HLW-M0X-M40T-00001) The reason for the passive WAI designation is that the canister could be damaged on parts of the rack that contact the canister when lowering and raising the canister from the rack. To ensure damage does not occur to the canister, the rack guides, and contact points are profiled and have smooth surfaces to reduce scratching to a minimum; see waste acceptance impacting screening form 24590-HLW-WSF-ENG-07-003.

The storage rack (Non-Safety, seismic SC-III) (24590-HLW-M0X-M40T-00001) is provided for temporarily storing one canister in the decontamination cave (H-0133), and is located on the 0 ft elevation. Canisters are loaded and removed from the rack with the canister grapple suspended from the decontamination cave crane. The rack stores the canister in an upright orientation. Any surface of the rack that contacts the canister is manufactured from 300 series stainless steel. [3.9.1.8] See Figure 4-20. (24590-QL-POA-SY00-00003-06-00381)

Figure 4-20: Canister Storage Rack

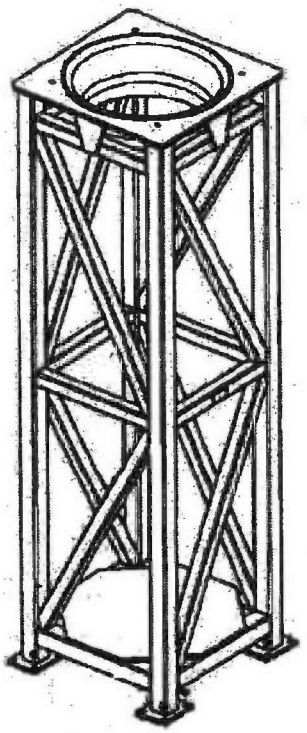

4.1.1.6.1.6.5 Decontamination Vessel Lid Through Wall Drive

Component Tag Number: *24590-HLW-MJ-HDH-DRIV-00001(South)*
Component Tag Number: *24590-HLW-MJ-HDH-DRIV-00008(North)*

Refer to: 24590-HLW-3PS-HDYR-T0001, *Engineering Specification for System HDH Swabbing and Monitoring System*

Two through wall drives provide a mechanical linkage to both decontamination vessel lids for remote opening and closing operations during the canister decontamination process. The south drive HDH-DRIV-00001 opens and closes decontamination vessel lid HDH-VSL-00002, the north drive HDH-DRIV-00008 opens and closes decontamination vessel lid HDH-VSL-00004.

The through wall drives are classified as Safety Significant (SS), seismic class SC-III, the bolts and load path components that hold the through wall assembly in place are Safety Class (SC), seismic class SC-I. (24590-HLW-M0X-M40T-00001) The safety function is that the through wall drive remains in place during a seismic event.

For ease of maintenance the through wall drive and lid position proximity switches are located out-cave in the adjacent corridor (HC0206), through the west wall of the canister decontamination cave at the +14 ft elevation. [3.4.2.2] The lid drive (controlled via the MHJ) moves the lid from the horizontal to the vertical position (closed to open). See Figure 4-21. (24590-QL-POA-HDYR-00001-05-00127)

Figure 4-21: Vessel Lid Through Wall Drive

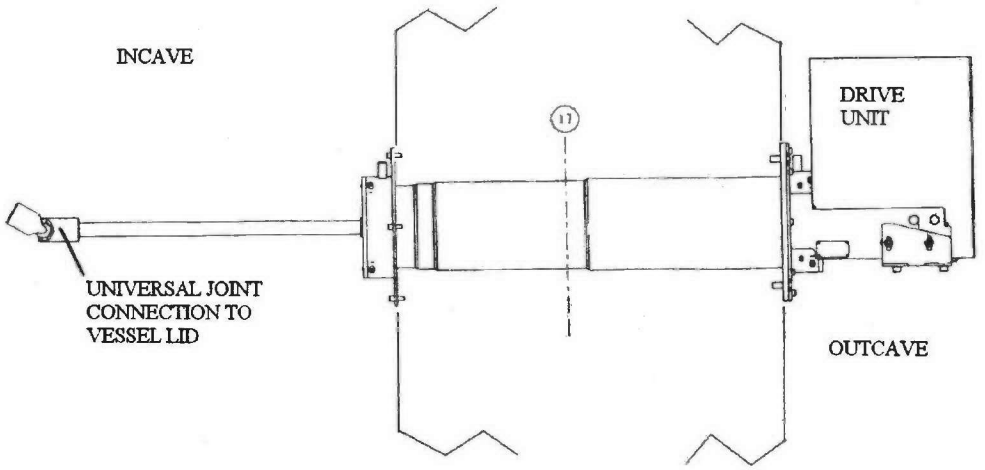

4.1.1.6.1.6.6 Through Wall Plugs

Component Tag Numbers: *24590-HLW-DD-HDH-PLUG-00001, 30-PLUG-00052 & 30-PLUG-00081*

The through wall plugs are SC/SC-I, having a safety function to remain inplace in a DBE seismic event as not to create a 6 inches or greater diameter (equivalent) opening in the C5 boundary. (24590-QL-POA-EMM3-00001-14-00018)

4.1.1.6.1.7 Canister Swabbing and Monitoring System Components

4.1.1.6.1.7.1 Telerobotic Manipulator

Component Tag Number: *24590-HLW-MJ-HDH-MANIP-00001*

Refer to: 24590-HLW-3PS-HDYR-T0001, *Engineering Specification for System HDH Swabbing and Monitoring System*

The telerobotic manipulator is a remotely controlled robotic arm and gripper. When combined with the vertical elevator and canister turntable, it has seven degrees of freedom and is capable of swabbing the bottom, side and top surfaces of the filled canister. Motion of the manipulator is achieved by electric servo motors, reduction gears, and a linear actuator. The manipulator exerts a continuous swabbing pressure of less than five pounds to ensure consistent sampling of loose surface contamination (24590-QL-POA-HDYR-00001-04-00003). [3.9.1.3] The pressure applied on the canister during the swabbing process is obtained from the load cell feedback information. The swab manipulator load cell (24590-HLW-JW-HDH-WE-4413) is designated as WAI (Passive). The passive attribute is that the load cell design is suitable for the application and environment for which it is purposed; see

CCN 215524 "Passive Item Screening" and waste acceptance impacting screening form 24590-HLW-WSF-ENG-07-002.

The telerobotic manipulator is mounted on a carriage that travels on a vertical rail assembly (HDH-RAIL-00005) mounted to the west wall of the canister decontamination cave, and is raised and lowered by a dual chain system driven via a through wall drive assembly (HDH-DRIV-00007). With the manipulator traveling in a vertical direction, the robot is able to swab a predetermined surface of a product canister in conjunction with rotation of the canister on the canister turntable (HDH-TTBL-00001). (24590-QL-POA-HDYR-00001-05-00001)

The manipulator can be programmed to perform multiple swabbing operations from a single swipe to a full canister body check in conjunction with the turntable. The manipulator's speed and flexibility enable the facility's operational times to be adequately met. The arm is programmed to pick up clean swabs in-cave and deposit active swabs into the through wall posting port. Force feedback is monitored and maintained for continuous swabbing force against the canister surface. The swabbing tool is shown on 24590-QL-POA-HDYR-00001-05-00199.

The power and control systems for the manipulator arm are supplied from the control console located outcave. This enables all control operations to be remote and enables all maintenance of the control system to be performed without the need for manned entry into the cave. The operator can switch to manual control and perform maintenance operations using a joystick mounted on a local control panel. By means of a viewing window as well as in-cave cameras, the operator can remotely operate the unit and perform maintenance activities on equipment situated within reach of the manipulator. The manipulator arm is designed to be detachable so that it can be removed from the cave for maintenance using the in-cave crane. [3.4.4.1]

The manipulator is capable of verifying the filled canisters geometric tolerance requirements, e.g. that the canister fits into a vertical right cylinder of 64.0 centimeter diameter, and 4.5 meters long. This is achieved by using the manipulators force feedback and positional indicator. The manipulator is able to collect accurate positional data from the end effector/indicator attached to the robot arm. See Figure 4-22.

Figure 4-22: Swabbing and Monitoring System

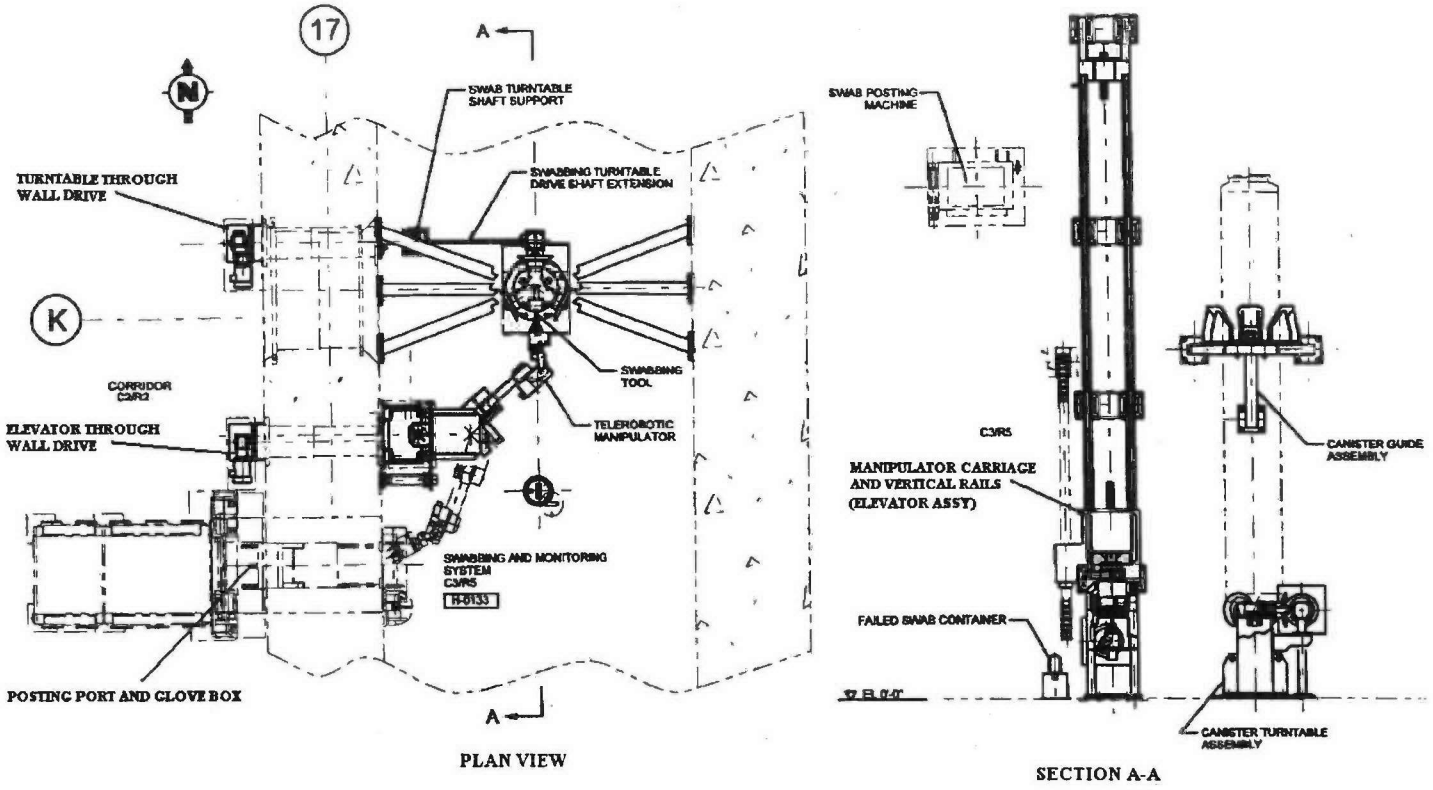

4.1.1.6.1.7.2 Swabbing Manipulator Carriage and Vertical Rail Assembly

Component Tag Number: *24590-HLW-MH-HDH-MHAN-00018 (manipulator carriage)*
Component Tag Number: *24590-HLW-MH-HDH-RAIL-00005 (vertical rail assembly)*

Refer to: 24590-HLW-3PS-HDYR-T0001, *Engineering Specification for System HDH Swabbing and Monitoring System*

The carriage and vertical rail assembly (elevator) is attached to encast plates on the west wall at the north end of the decontamination cave. The manipulator carriage (HDH-MHAN-00018) provides a mounting support for the telerobotic manipulator assembly (HDH-MANIP-00001). The carriage is attached to the vertical rail assembly (HDH-RAIL-00005).

The carriage and rail assembly provides a controlled method of raising and lowering the manipulator arm to gain full access of the canister from top to bottom, thus allowing full coverage for swabbing predetermined areas of the canister surface. The manipulator can pick up and return swabs from and to the Swab Posting Port. The elevator uses a dual chain to raise and lower the manipulator carriage. Limit switches and hard stops are positioned at the upper and lower limits of the rails. See Figure 4-22. (24590-QL-POA-HDYR-00001-05-00001 and 00139)

4.1.1.6.1.7.3 Swabbing Manipulator Elevator Through Wall Drive

Component Tag Number: *24590-HLW-MJ-HDH-DRIV-00007*

Refer to: 24590-HLW-3PS-HDYR-T0001, *Engineering Specification for System HDH Swabbing and Monitoring System*

The through wall drive is classified as Safety Significant (SS), seismic class SC-III, the bolts and load path components that hold the through wall assembly in place are Safety Class (SC), seismic class SC-I. (24590-HLW-M0X-M40T-00001) The safety function is that the through wall drive remains in place during a seismic event.

The through wall drive provides a mechanical drive through a gear head (out cave) to a drive shaft (through wall) to the dual chain drive system which operates the manipulator carriage that moves the manipulator assembly up and down. [3.4.2.2] The through wall drive translates rotary motion from a 460V 3 phase motor. Overload protection in the form of a torque limiter is included to protect the drive train from catastrophic failure.

The motor support bracket is fastened to the through wall liner flange in corridor HCB015, access to the through wall drive is gained from platform HMB034. An encoder is mounted to a through wall shaft to determine key location points along the vertical rail. See Figure 4-22. (24590-QL-POA-HDYR-00001-05-00127)

4.1.1.6.1.7.4 Canister Swabbing Turntable

Component Tag Number: *24590-HLW-MJ-HDH-TTBL-00001*

Refer to: 24590-HLW-3PS-HDYR-T0001, *Engineering Specification for System HDH Swabbing and Monitoring System*

The canister swabbing turntable is designated as WAI (Passive). The reason for the passive WAI designation is that the canister could be damaged on parts of the turntable that contact the canister when lowering and raising the canister from the table. To ensure damage does not occur to the canister, the turntable guides, and contact points are profiled and have smooth surfaces to reduce scratching to a minimum; see waste acceptance impacting screening form 24590-HLW-WSF-ENG-07-002.

The canister turntable is remotely driven via a through wall drive (HDH-DRIV-00004). The turntable receives, centralizes, supports and rotates the filled canister enabling the manipulator arm to obtain swabs and dimensional data of the canister surface. The turntable is shaft driven from an outcave motor and gearbox. [3.4.2.2] The in-cave portion incorporates a right angle gearbox and drives the slewing ring. An outcave encoder connected to the drive motor is used for positioning of the turntable as well as determining the number of revolutions. Rotational speed with a canister is 3 rpm +/- 1 rpm. See Figure 4-22. (24590-QL-POA-HDYR-00001-05-00005)

4.1.1.6.1.7.5 Canister Turntable Through Wall Drive

Component Tag Number: *24590-HLW-MJ-HDH-DRIV-00004*

Refer to: 24590-HLW-3PS-HDYR-T0001, *Engineering Specification for System HDH Swabbing and Monitoring System*

The through wall drive is classified as Safety Significant (SS), seismic class SC-III, the bolts and load path components that hold the through wall assembly in place are Safety Class (SC), seismic class SC-I. (24590-HLW-M0X-M40T-00001) The safety function is that the through wall drive remains in place during a seismic event.

The through wall drive provides a mechanical linkage to the turntable drive extension shaft drive coupling to operate the turntable. The through wall drive (located out cave) translates rotary motion from a 460V 3 phase motor. Overload protection in the form of an overload clutch is included to protect the drive train from catastrophic failure. The motor support bracket is fastened to the wall flange embed plate. The encoder is mounted to the through wall shaft to determine location and rotation of the turntable. See Figure 4-22. (24590-QL-POA-HDYR-00001-05-00127)

4.1.1.6.1.7.6 Canister Guide Assembly

Component Tag Number: *24590-HLW-MH-HDH-MHAN-00003*

Refer to: 24590-HLW-3PS-HDYR-T0001, *Engineering Specification for System HDH Swabbing and Monitoring System*

The canister guide assembly is designated as WAI (Passive). (24590-HLW-M0X-M40T-00001) The reason for the passive WAI designation is that the canister could be damaged on parts of the guide that contact the canister when lowering and raising the canister from the turntable. To ensure damage does not occur to the canister, the guides, and contact points are profiled and have smooth surfaces to reduce scratching to a minimum; see waste acceptance impacting screening form 24590-HLW-WSF-ENG-07-002.

The canister guide assembly is located at the north end of the decontamination cave. The guide consists of two support/guide halves that are supported off embed plates located on the east and west the cave walls. Each half is fitted with canister lead in steelwork with spring loaded ball transfer units to guide the canister equally through the support assembly without damaging the canister. Having the support assembly in halves, the manipulator can swab between the steelwork while the canister is rotating on the turntable. See Figure 4-22. (24590-QL-POA-HDYR-00001-05-00010)

4.1.1.6.1.7.7 Failed Swab Container

Component Tag Number: *24590-HLW-MH-HDH-MHAN-00021*

Refer to: 24590-HLW-3PS-HDYR-T0001, *Engineering Specification for System HDH Swabbing and Monitoring System*; 24590-HLW-M0-HDH-00033001, Design Proposal Drawing; and 24590-HLW-M0D-HDH-00032, Data Sheet

The failed swab container (basket) provides temporary storage and containment of contaminated swabs that are too radioactive to be transferred through the posting port to the out cave glovebox. The container has a hinged lid and latch that allow remote opening and closing with the manipulator. A lifting bail on the lid allows the container to be moved using the decontamination cave crane hook.

4.1.1.6.1.7.8 Decontamination Cave Posting Port

Component Tag Number: *24590-HLW-DD-HDH-TWDVC-00002*

Refer to: 24590-WTP-3PS-M000-T0006, *Engineering Specification for WTP Facility Posting Port*

The posting port is a through wall transport device. Its function is to enable small items to be transferred between the decontamination cave and a glovebox, primarily swabs to and from the telerobotic manipulator [3.9.1.1]. The posting port is positioned in the west wall of the north end of the decontamination cave, south of the canister swabbing and monitoring system components. The posting port (located through wall) consists of a through wall transport tray, in-cave and outcave shield doors, and gamma monitors [ALARA]. See Figure 4-23. (24590-QL-POA-M000-00002-06-00103)

The through wall posting port is classified as safety significant (SS), seismic class SC-III, the bolts and load path components that hold the through wall assembly in place are safety class (SC), seismic class SC-I. (24590-HLW-M0X-M40T-00001) The safety function is that the posting port remains in place during a seismic event.

The outcave shield door is interlocked to a gamma monitor (SS safety interlock) located in the through wall portion of the posting port. The gamma monitor (SS) prevents the out-cave door opening on detection of a high radiation source [ALARA]. [Active Safety Function] [3.11.2.1] The in-cave and outcave shield doors are interlocked (SS safety interlock) [3.4.2.1] to prevent both doors being open simultaneously. [Active Safety Function] [3.11.2.1] The drives for both the in-cave and outcave shield doors are located outcave. A transport tray transfers tools/swabs from the glovebox to a retrieval location in cave, accessible by the telerobotic manipulator and MSM. All instrumentation is manually retrievable to the glovebox for calibration and maintenance.

4.1.1.6.1.7.9 Decontamination Cave Posting Port Glovebox

Component Tag Number: 24590-HLW-MH-HDH-MHAN-00001

Refer to: 24590-WTP-3PS-M000-T0007, *Engineering Specification for WTP Facility Posting Port Glovebox*

The glovebox consists of two sections fabricated to form a single unit. The first section is an airlock provided for the import of items into the glovebox. The airlock doors are interlocked to prevent both doors being open at the same time, and the inner air lock door is also interlocked to the posting port outcave shield door. See Figure 4-23. (24590-QL-POA-M000-00002-06-00167)

The glovebox is vented to the decontamination cave to ensure contamination is cascaded from an area of lower to higher contamination potential. This ventilation path is a stainless steel pipe connected between the bottom of the glovebox to a joggle pipe penetrating the shield wall into the decontamination cave. This ventilation pipe also provides a drainage path into the decontamination cave should the glovebox internal fire suppression system activate.

On retrieval of swabs, gamma monitors within the posting port perform detection of high radiation dose rates. If high dose rates are detected, the swab is returned to the decontamination cave area and temporarily stored in the failed swab container (HDH-MHAN-00021). Acceptable swabs are introduced into the glovebox where they are further analyzed for contamination using a hand-held monitor [3.9.1.4], and the results are recorded. The swabs are then disposed of on a periodic basis via a bagging port.

If the swabs indicate the canister surface meet contamination limits, the canister proceeds. If the swabs indicate levels of contamination above acceptance limits, the canister is returned to the Decontamination Vessel. [3.9.1.5]

Contamination measurement of swabs in the glovebox, and calibration of the radiation detection instrument is a WAI activity. The rationale for the WAI designations of the calibration and contamination level measurements is that the measurement of contamination level activity provides data into the canister shipping records and if either

of these activities were performed incorrectly, the potential exists that an exported canister may exceed WCP surface contamination limits; see waste acceptance impacting screening form, 24590-HLW-WSF-ENG-07-002.

Figure 4-23: Posting Port and Glovebox

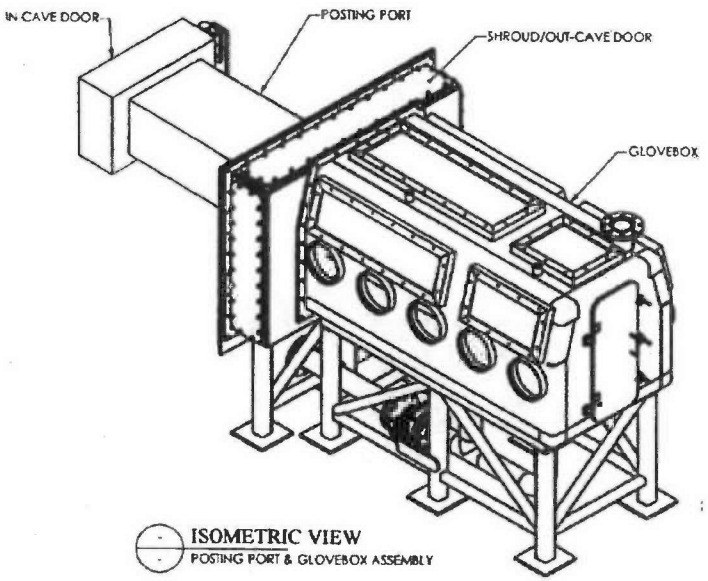

4.1.1.6.1.8 Shielded Windows

Component Tag Numbers: *24590-WTP-AD-30-SWIN-00030, 00031 and 00032*

Refer to: 24590-WTP-3PS-MX00-T0002, *Engineering Specification for Shielded Glass Windows*

The function of the shielded glass windows is to protect personnel from radiation sources from within the decontamination cave, and to provide wide angle viewing of the in-cave process and maintenance activities. The windows are designed for installation and service from the cold side. The windows are non-fogging with an inert gas filled system to prevent dust and moisture accumulation. There is one shield window located in the west wall opposite the swabbing station, one located in the west wall opposite the decontamination vessels, and one located in the south wall opposite the decontamination cave import hatch. See Figure 4-24.

Figure 4-24: Shielded Window

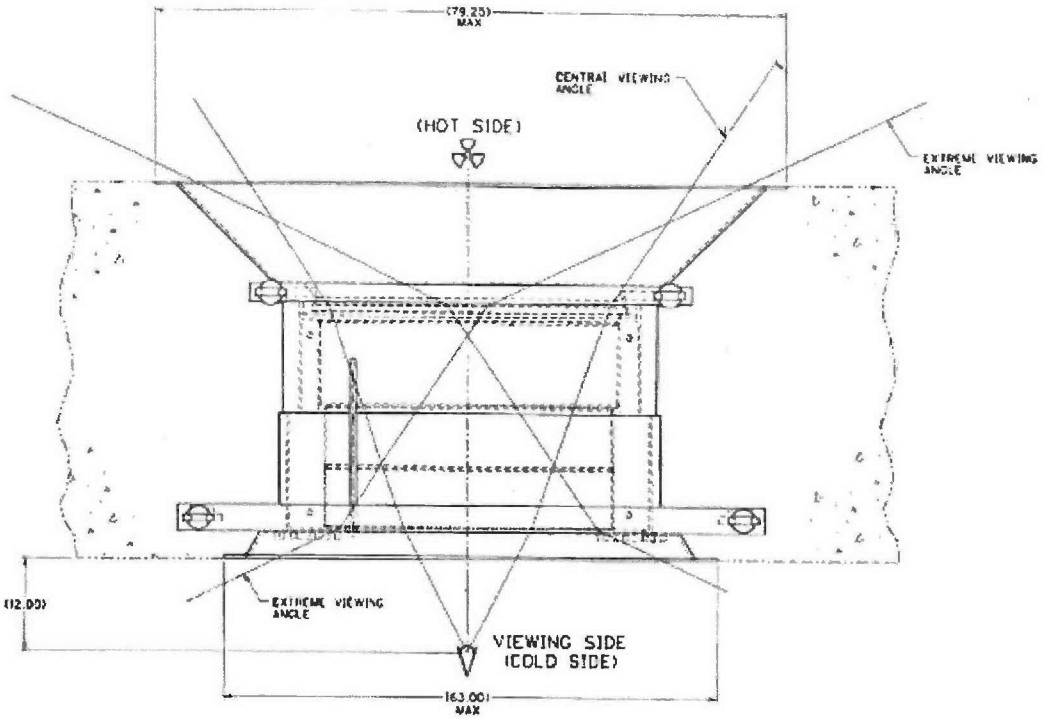

4.1.1.6.1.9 Master Slave Manipulators (MSMs)

Component Tag Numbers: *24590-HLW-MJ-HDH-MANIP-00002, 00003 and 00004*

Refer to: 24590-WTP-3PS-M000-T0012, *Engineering Specification for Master Slave Manipulators for PTF, HLW, LAW and LAB*

The decontamination cave is equipped with three MSMs; a pair of MSMs located through the west wall adjacent to the decontamination vessels, and a single MSM through the west wall located adjacent to the swabbing and monitoring station. Each MSM location is equipped with a shield window for operational viewing.

The MSM comprises a master arm, (located out-cave in the operations area), through wall shielding seal tube, and an in-cave slave arm. The master arm houses the drive motors to enable outcave maintenance activities. The MSM through wall mechanisms are SC/SC-I (24590-HLW-M0X-M40T-00001), having a safety function to remain in place in a DBE seismic event as not to create a 6 inches or greater diameter (equivalent) opening in the C5 boundary.

The slave arm reacts to motion inputs from the master via operations personnel manipulation. The slave arm has a maximum load capacity of 50 pounds. (24590-WTP-M0-10-00014) Each MSM has a set of removable fingers which are used to hold and manipulate in-cave items. A removable polyurethane boot covers the slave arm to minimize contamination of the arm and its internal working components. (24590-QL-POA-MJW0-00003-03-00041)

The function of the MSMs located at the decontamination station is to remotely assist in coupling and decoupling the crane hook from the grapple and can be used to open or close the decontamination vessel lids should the through wall drive mechanism fail. The MSM located next to the swabbing and monitoring station may be used to retrieve items posted into the cave such as maintenance items, wipes etc. via the through wall posting port. An MSM is shown in Figure 4-25.

Figure 4-25: Master Slave Manipulator

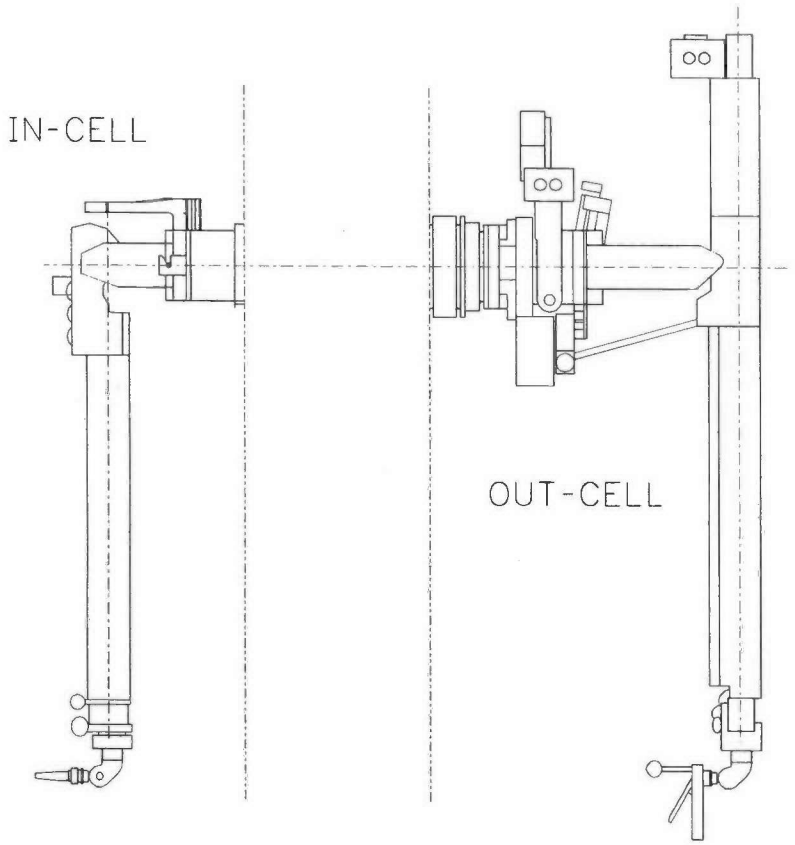

4.1.1.6.1.10 Closed Circuit Television Cameras (CCTV)

Refer to: 24590-HLW-J0-PTJ-00001 to 00004, *HLW Vitrification System PTJ Supplemental Instr Diagram CCTV Equipment Plan At EL. -21'-0", 0'-0", 14'-0" and 37'-0"*

The canister rinse tunnel is provided with two through wall fixed cameras (PTJ-XT-3016 and 3017) located at the import and export hatches, and one through wall pan/tilt/zoom camera (PTZ) (PTJ-XT-00019) located at the rinse station. The cameras are used to monitor loading and unloading of the canister into the canister rinse bogie vessel, viewing of the indicators on the canister grapple, and movement of the bogie along its travel path in the tunnel. One wall mounted PTZ camera (PTJ-XT-3022) is located in the bogie maintenance area for general viewing of bogie movements and maintenance activities.

The canister decontamination cave is provided with two through wall PTZ cameras (PTJ-XT-3014 and 3015) located the west wall of the cave to provide viewing of canister handling activities and swab manipulation at the

swabbing and monitoring station. Supplemental viewing is provided by four on-board cameras mounted on the in-cave crane (PTJ-XT-3055, 3056, 3057 and 3058). One wall mounted PTZ camera (PTJ-XT-3096) is located in the crane maintenance area for general viewing of crane movements and maintenance activities.

The canister storage transfer tunnel is provided with three cameras, one bogie mounted PTZ camera with integral lighting (PTJ-XT-3193), one PTZ camera located on maintenance platform (HPB037A) at the east end of the transfer tunnel (PTJ-XT-3194), and one through wall PTZ camera in the west wall of the tunnel (PTJ-XT-3121). The cameras are used to monitor loading and unloading of the canister into the canister storage transfer bogie, viewing of the indicators on the canister grapple, and movement of the bogie along its travel path in the tunnel. The camera mounted on the bogie maintenance area platform is used for general viewing of bogie movements and maintenance activities.

4.1.1.6.1.11 Local Operator Interface (LOI)

Refer to: 24590-HLW-JJ-PCJ-00001, *River Protection Project Waste Treatment Plant Control System Architecture Diagram HLW*

There are two designated LOIs for the HDH system, one located in corridor HC0206 by the west wall of the decontamination cave, adjacent to the swabbing station window (HDH-PNL-00016), and one located in corridor HC0208 by the south wall of the decontamination cave adjacent to the canister import hatch (HDH-PNL-00015). LOIs throughout the facility are standardized to provide common operator controls, and therefore reduce human error. Each LOI has access to the cameras located in system HDH, and may be used to control equipment movement via the MHJ.

4.1.1.6.2 Description of Process Equipment

4.1.1.6.2.1 Tanks and Vessels

4.1.1.6.2.1.1 Cerium IV Addition Tank

Component Tag Number: *24590-HLW-MT-HDH-TK-00002*

Refer to: 24590-WTP-3PS-MV00-T0001, *Engineering Specification for Pressure Vessel Design and Fabrication* and 24590-HLW-N1D-HDH-00009, *Corrosion Evaluation for HDH-TK-00002 Cerium IV Addition Tank*

The cerium IV addition tank (see Figure 4-26) provides for the storage of the 0.5 M ceric nitrate used in the canister decontamination process. The cerium IV addition tank is located in the canister decontamination reagents room (H-0418, a C2/R2 room at elevation +58 ft on 24590-HLW-P1-P01T-00005), and is gravity drained to the canister decontamination vessels (HDH-VSL-00002/4) through a remotely-operated valve (HDH-YV-0111/0212).

The cerium IV addition tank is 24 in. diameter by 13.5 in. high (seam to seam). The tank is designed and fabricated to ASME Section VIII Division 1 (24590-CM-POA-MVA0-00008-02-00019). The design pressure is 15 psig 113°F (24590-CM-POA-MVA0-00008-02-00019). The tank is fabricated from titanium [3.4.1.2.2] and has a batch volume of 20 gallons, which is the amount to decontaminate one canister (24590-HLW-MVC-HDH-00005). The cerium IV addition tank is equipped with remote and local level indication (24590-HLW-M6-HDH-00001002). During normal operations, the cerium IV addition tank is filled manually in the canister decontamination reagents room and emptied remotely from a control area. The tank is vented to the room.

The top of the cerium IV addition tank has a 3 in. nozzle with a screwed plug. The nozzle is used for adding the ceric nitrate. Ceric nitrate is delivered to the WTP in 55 gallon drums and is transferred in 20 gallon batches to

the cerium IV addition tank using a drum pump. A hose is located in the canister decontamination reagents room that can also be inserted into the nozzle for tank flushing with demineralized water as necessary. The tank is located in a contained area to hold any overflow or spilled reagents.

Figure 4-26: Cerium IV Addition Tank

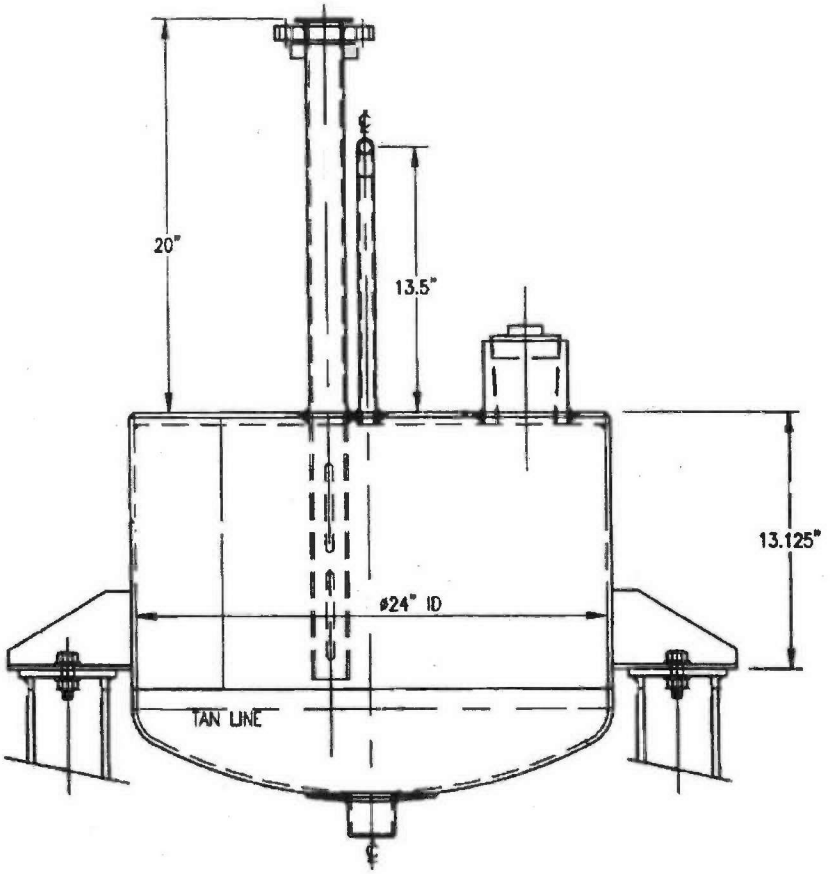

4.1.1.6.2.1.2 Hydrogen Peroxide Addition

Refer to: 24590-HLW-N1D-HDH-00010, *Corrosion Evaluation for HDH-TK-00003 Hydrogen Peroxide Addition Tank*

A 30 wt% hydrogen peroxide solution is used to neutralize (deactivate) the spent decontamination solution. The hydrogen peroxide is added in batches through a 4 in. diameter section of pipe that serves as a reservoir. This reservoir is located in the canister decontamination reagents room (H-0418), a C2/R2 area at elevation +58 ft on 24590-HLW-P1-P01T-00005, and is gravity drained to the waste neutralization tank through a remotely-operated valve.

The volume of the hydrogen peroxide batch is 0.5 gallons (24590-HLW-MVC-HDH-00005), which is the amount of hydrogen peroxide required to neutralize the 20 gallons of ceric nitrate used per canister. The reservoir has local and remote level indication and is manually filled. A hose is located in the canister decontamination reagents

room that can be inserted into the top of the reservoir for flushing with demineralized water as necessary. The reservoir is located in a contained area to hold in any spilled reagents.

4.1.1.6.2.1.3 Canister Decontamination Rinse Bogie Vessel

Component Tag Number: *24590-HLW-MV-HDH-VSL-00001*

Refer to: 24590-WTP-3PS-MV00-T0001, *Engineering Specification for Pressure Vessel Design and Fabrication* and 24590-HLW-N1D-HDH-00007, *Corrosion Evaluation for HDH-VSL-00001 Rinse Tunnel Canister Rinse Vessel*

The canister decontamination rinse bogie vessel is designated as WAI (Passive). The reason for the passive WAI designation is that the canister could be damaged on parts of the vessel that contact the canister when lowering and raising the canister from the vessel. To ensure damage does not occur to the canister, the vessel contact points are profiled and have smooth surfaces to reduce scratching to a minimum; see waste acceptance impacting screening form, 24590-HLW-WSF-ENG-07-002.

The canister decontamination rinse bogie vessel is located on the rinse bogie (HDH-TRLY-00003) in the canister rinse bogie tunnel, room H-B039B at elevation −16 ft 6 in. (a C3/C5/R3/R5 room on 24590-HLW-P1-P01T-00001). The 71 in. OD x 204 in. high canister decontamination rinse bogie vessel generally conforms to ASME Section VIII, *Boiler and Pressure Vessel Code* (24590-HLW-MVD-HDH-00009). The canister rinse bogie tunnel is considered a C5/C3 transition area from the handling cave to the decontamination station. The vessel design life is 40 years (24590-HLW-MVD-HDH-00009) [3.4.1.2.1].

The rinse water (deionized water from plant wash system) removes loose contamination from the canister to keep the decontamination cave (H-B035) as clean as possible. The canister decontamination rinse bogie vessel and its internal components are made of 316L stainless steel (24590-HLW-3PS-MQR0-T0002). [3.4.1.2.2] The water volume used during canister decontamination is 360 gallons (24590-HLW-MVC-HDH-00005) at 88 gpm (24590-HLW-M6-HDH-00002003). The canister decontamination rinse bogie pump (HDH-PMP-00001) is running as the rinse water is added. Therefore, the canister decontamination rinse bogie vessel does not need to hold the entire volume of water.

The canister decontamination rinse bogie vessel is equipped with service piping for plant wash (deionized water) to two spray ring assemblies that rinse the entire canister, vent line to the room, overflow to sump (HDH-SUMP-00001) through the vent line [3.5.2.1], drain line, level element/transmitter (24590-HLW-M6-HDH-00002003) [3.11.1.1.3], pump suction line to a centrifugal pump (HDH-PMP-00001) that transfers liquid from the canister decontamination rinse bogie vessel (HDH-VSL-00001) to the waste neutralization vessel (HDH-VSL-00003), and an instrument service air line for the inflatable seal (24590-HLW-M6-HDH-00002003) [3.5.3.13]. The overflow line connects to the vessel about 21 in. above the vessel bottom (24590-QL-POA-MQTS-00002-01-123) [3.5.2.2]. The canister spray rings can also be used to flush the bogie vessel for maintenance operations [3.5.3.8, 3.5.4.1]. During normal operations, the canister decontamination rinse bogie vessel is operated remotely from a control area.

When transferring the rinse bogie and vessel into the maintenance area H-B039A, the bogie/vessel is disconnected from the service track at the door aperture prior to transferring the bogie through open shield door (HDH-DOOR-00001) into the maintenance area [3.5.2.6, 3.5.2.7]. Back flow preventers ensure rinse water does not drain from the vessel when disconnected from the RLD system at the service track disconnection point. When

the rinse bogie vessel is in the maintenance area, the crane can place a lid on the open vessel to contain contamination [3.5.2.8]. See Figure 4-27. (24590-QL-POA-MQTS-00002-01-127 and -00258)

Figure 4-27: Rinse Bogie Vessel

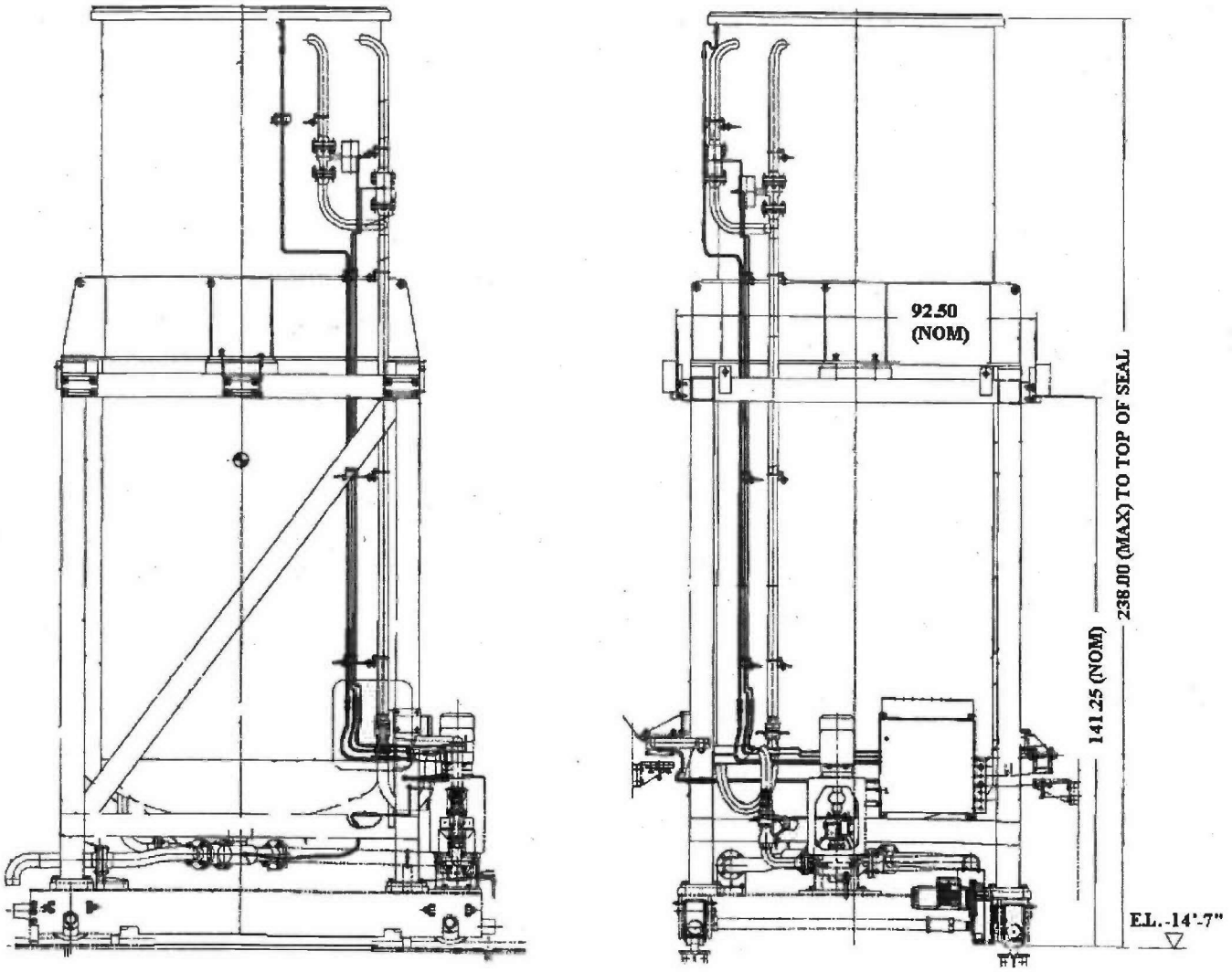

4.1.1.6.2.1.4 Canister Decontamination Vessel

Component Tag Number: *24590-HLW-MV-HDH-VSL-00002*
Component Tag Number: *24590-HLW-MV-HDH-VSL-00004*

Refer to: 24590-WTP-3PS-MV00-T0001, *Engineering Specification for Pressure Vessel Design and Fabrication* and 24590-HLW-N1D-HDH-00003, *Corrosion Evaluation for HDH-VSL-00002/00004 Canister Decontamination Vessels*

The canister decontamination vessels are designated as WAI (Passive). The reason for the passive WAI designation is that the canister could be damaged on parts of the vessel that contact the canister when lowering and raising the canister from the vessel. To ensure damage does not occur to the canister, the vessel contact points are profiled and have smooth surfaces to reduce scratching to a minimum; see waste acceptance impacting screening form 24590-HLW-WSF-ENG-07-002.

The 30 in. ID x 163 in. high (tangent to tangent) canister decontamination vessels are fabricated from titanium and hold the canister and the ceric nitrate and nitric acid decontamination solution. The canister decontamination vessels are designed and fabricated in compliance with ASME Section VIII, *Boiler and Pressure Vessel Code* [3.5.1.2]. The design pressure is 15 psig and 225°F. (24590-CM-POA-MVA0-00008-02-00001) The canister decontamination vessels are located in the canister decontamination cave (H-B035, a C3/C5/R3/R5 area at elevation −16 ft). The decontamination vessels have upper and lower spray rings, a heating/cooling coil, sparger and a motor operated lid. The vessel design life is 40 years. (24590-HLW-MVD-HDH-00006) [3.4.1.2.1]

The first decontamination step is to fill the decontamination vessel with about 214 gallons of decontamination solution and soak the canister at 149°F for 6 hrs. After cooling to 104°F and draining, the canister is spray washed with about 200 gallons of nitric acid. After draining, the canister is spray rinsed with about 200 gallons of demineralized water (24590-HLW-MVD-HDH-00006). The canister is lifted at a rate of 5 ft/min through the spray rings at the top of the canister decontamination vessels during the acid and water sprays. (24590-HLW-M4C-HDH-00001)

The canister decontamination vessels have piping for ceric nitrate addition [3.5.3.4], nitric acid/demineralized water to the spray rings [3.5.3.5], water supply and return for the heating/cooling coil, and instrument service air with flow indication for sparger mixing (24590-HLW-M6-HDH-00001001) [3.5.3.3, 3.5.1.4, 3.11.1.1.4]. The sparge ring is 1/2 inch sch 80 pipe (24590-CM-POA-MVA0-00008-02-00004). Non maintainable in-cell pipework is fully welded. The canister decontamination vessels are equipped with dual thermocouples, level, pressure, and density bubbler diptubes (24590-HLW-M6-HDH-00001001) [3.11.1.1.2, 3.11.1.1.3], and dual steam ejectors that transfer liquid to the waste neutralization vessel. The thermocouples send a signal to a temperature indicating controller, which modulates the steam flow control valve to the heat exchanger and interfaces with the process cooling water supply/return valves and hot water supply/return valves. (24590-HLW-M6-HDH-00001001 and 00004001 and 00004002) [3.11.1.1.1]

The canister decontamination vessels have an overflow line that is connected to a dip tube in the waste neutralization vessel [3.5.2.1]. The canister decontamination vessels vent through the overflow line to a tee, which is connected to a demister (HDH-DMST-00001) that vents to the Pulse Jet Ventilation (PJV) system [3.5.3.11]. The canister spray rings can also be used to flush the canister decontamination vessels for maintenance operations. [3.5.3.5, 3.5.4.1]

During normal operation, the canister decontamination vessels are operated remotely from a control area. The canister decontamination vessels can be used simultaneously, but the valving configuration allows ceric nitrate addition or nitric acid/demineralized water sprays to only one vessel at a time. Both canister decontamination vessels can be performing the decontamination solution soak.

The heating/cooling coil is about 28 in. dia x 155 in. high and is fabricated from 1 in. OD titanium tubing (24590-CM-POA-MVA0-00008-02-00006) [3.4.1.2.2]. Hot water (expected to be 8 gpm) is supplied to the coil at 180°F to heat the ceric nitrate solution from ambient to 149°F in about 90 minutes. Process cooling water (expected to be 7 gpm) flows to the coil at 83°F to cool the solution from 149°F to 104°F in about 90 minutes prior to transfer (24590-HLW-MEC-HDH-00001) [3.5.1.1, 3.5.3.9]. The coil assembly is located between the canister wall and

vessel shell and has been designed to be removable from the vessel, which facilitates replacement if necessary. The removable coil assembly is shown in Figure 4-28.

Figure 4-28: Canister Decontamination Vessels Removable Coil Assembly

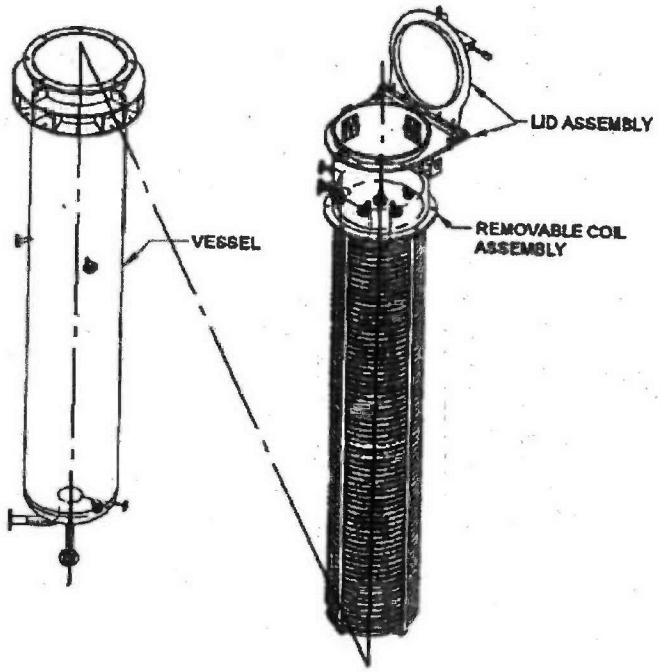

4.1.1.6.2.1.5 Waste Neutralization Vessel

Component Tag Number: *24590-HLW-MV-HDH-VSL-00003*

Refer to: 24590-WTP-3PS-MV00-T0001, *Engineering Specification for Pressure Vessel Design and Fabrication* and 24590-HLW-N1D-HDH-00005, *Corrosion Evaluation for HDH-VSL-00003 Waste Neutralization Vessel*

The waste neutralization vessel is a 304L stainless steel vessel [3.4.1.2.2] that receives spent decontamination solution (cerous nitrate, nitric acid, demineralized water) from the canister decontamination vessels and spent wash water from the canister decontamination rinse bogie vessel (HDH-VSL-00001) (24590-HLW-M6-HDH-000020001) [3.5.1.6]. The vessel is 7 ft diameter by 16 ft 8 in. high (seam to seam) with a capacity of 4074 gal. A 30% hydrogen peroxide solution is added to reduce ceric ions in the waste. 5 M sodium hydroxide is added to adjust the pH prior to transfer to the RLD system. The waste neutralization vessel is designed and fabricated in compliance with ASME Section VIII, *Boiler and Pressure Vessel Code* [3.5.1.2]. The design pressure is 15 psig and 237°F (24590-CM-POA-MVA0-00018-02-00001). The waste neutralization vessel is located in the canister decontamination cave (H-B035, a C3/C5/R3/R5 room at elevation −16 ft). The vessel design life is 40 years. (24590-HLW-MVD-HDH-00003) [3.4.1.2.1]

The waste neutralization vessel has inlet nozzles for effluent from each canister decontamination vessel (HDH-VSL-00002/4), effluent from the canister decontamination rinse bogie vessel (HDH-VSL-00001), and overflow from each canister decontamination vessel. The waste neutralization vessel has service piping for plant wash to the vessel spray ring [3.5.3.8, 3.5.4.1], sodium hydroxide addition via the spray ring [3.5.3.7], hydrogen peroxide

addition [3.5.3.6], instrument service air with flow indication for sparger mixing (24590-HLW-M6-HDH-00002001) [3.5.3.3, 3.5.1.4, 3.11.1.1.4], overflow line to sump HDH-SUMP-00003 [3.5.2.1] and vent outlet to the PVV ventilation system [3.5.3.10]. The sparge ring is 1 inch sch 40 pipe (24590-CM-POA-MVA0-00018-02-00012). The overflow line (HDH-PA-00004-S11F-06) is 6 inch sch 10S (24590-HLW-P3-HDH-PA00004001) [3.5.2.9]. The waste neutralization vessel has level, temperature, and pressure transmitters (24590-HLW-M6-HDH-00002001) [3.11.1.1.1, 3.11.1.1.2, 3.11.1.1.3]. Three steam ejectors empty the waste neutralization vessel (dual ejectors to transfer to acidic waste vessel RLD-VSL-00007 and one ejector to empty the vessel to the plant wash and drains vessel RLD-VSL-00008). [3.5.3.1] During normal operations, the waste neutralization vessel is operated remotely from a control area. See Figure 4-29.

Figure 4-29: Waste Neutralization Vessel

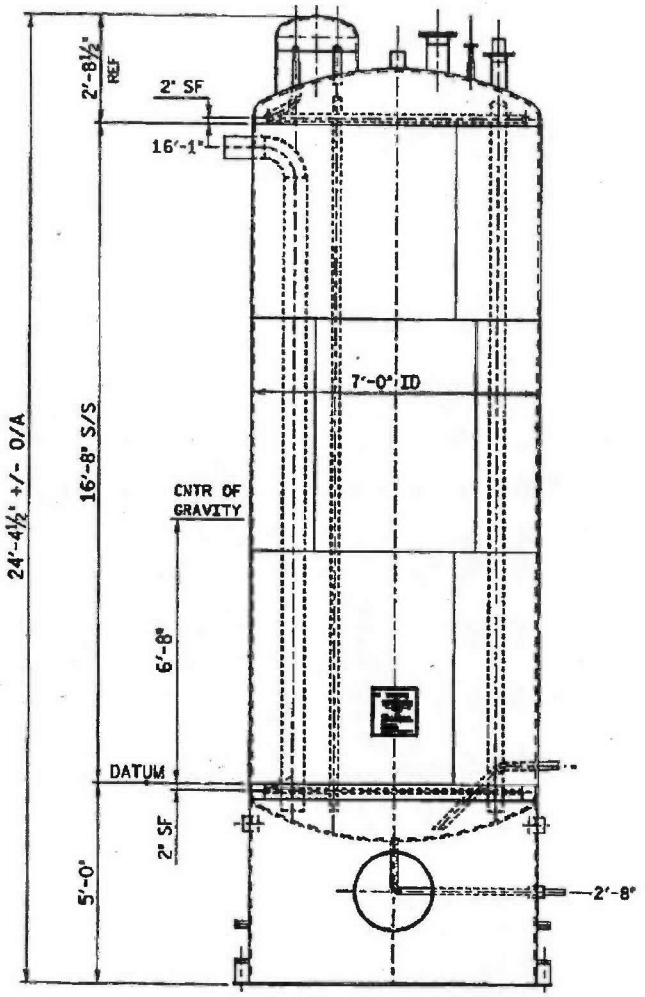

4.1.1.6.2.1.6 Canister Decontamination Demister

Component Tag Number: *24590-HLW-MV-HDH-DMST-00001*
Refer to calculation 24590-HLW-M6C-HDH-00025

The demister receives vent gas from the canister decontamination vessels. [3.12.1.1] The gas flows upward through a mesh pad and discharges to the PJV header. The water mist de-entrained by the mesh pad forms water droplets that flow back down through the gas inlet to the waste neutralization tank. The demister has differential pressure transmitter taps to measure the pressure drop across the mesh pad. The demister has spray nozzles, which are connected to the plant wash system, to flush or clean the mesh pad.

4.1.1.6.2.2 Pumps and Ejectors

4.1.1.6.2.2.1 Canister Rinse Bogie Pump

Component Tag Number: *24590-HLW-MP-HDH-PMP-00001*

Refer to data sheet 24590-QL-POA-MQTS-00002-06-00003

The canister rinse bogie pump is used to transfer spent rinse water from the canister decontamination rinse bogie vessel (HDH-VSL-00001) to the waste neutralization vessel (HDH-VSL-00003). The transfer line has double check valves to prevent backflow (24590-HLW-M6-HDH-00002003). The canister decontamination rinse bogie pump is located on the bogie (HDH-TRLY-00003), next to the canister decontamination rinse bogie vessel. The canister decontamination rinse bogie vessel, pump, and bogie are all located in the canister rinse bogie tunnel, room H-B039B at elevation –16 ft (a C3/C5/R3/R5 room).

The pump is an ANSI B73.1 centrifugal pump and is rated at 88 gpm and 30 ft total dynamic head (TDH). The pump is constructed of CF8M (316 SS) and has a 3 hp 1800 rpm motor. (24590-QL-POA-MQTS-00002-06-00003) During normal operations, the canister decontamination rinse bogie pump is operated remotely from a control area. Pump failure may be inferred by the auxiliary contactor on the motor starter and level indicators in the canister rinse bogie vessel.

4.1.1.6.2.2.2 Steam Ejectors

Component Tag Numbers: *24590-HLW-MP-HDH-EJCTR-00002 A/B*
Component Tag Numbers: *24590-HLW-MP-HDH-EJCTR-00003 A/B*
Component Tag Numbers: *24590-HLW-MP-HDH-EJCTR-00056 A/B*
Component Tag Number: *24590-HLW-MP-HDH-EJCTR-00057*

Refer to data sheets 24590-HLW-MCD-HDH-00001, 24590-HLW-MCD-HDH-00002, and 24590-HLW-MCD-HDH-00008

Dual steam ejectors (HDH-EJCTR-00003A/B and -00056A/B) are provided to transfer the spent decontamination solution from each canister decontamination vessel to the waste neutralization vessel. The 2 inch titanium ejectors are rated at 63 gpm at 1365 lb/hr steam. (24590-HLW-M6-HDH-00001001)

Dual steam ejectors (HDH-EJCTR-00002A/B) are provided to transfer the neutralized effluent from the waste neutralization vessel to the acidic waste vessel (RLD-VSL-00007). The 2 inch 304L SS ejectors are rated at 58 gpm at 1365 lb/hr steam (24590-HLW-M6-HDH-00002002). An emptying ejector (HDH-EJCTR-00057) transfers the contents of the waste neutralization vessel to the plant wash and drains vessel (RLD-VSL-00008) as necessary. The 1.5 inch 304L SS ejector is rated at 35 gpm at 750 lb/hr steam. (24590-HLW-M6-HDH-00002002)

The steam ejectors receive 100 psig high pressure steam from the canister decontamination steam rack (HDH-RK-00009). [3.5.3.2] During normal operation, the ejectors are operated remotely from a control area.

4.1.1.6.2.3 Hot Water Heating System Skids

Component Tag Numbers: *24590-HLW-MX-HDH-SKID-00001/00002*

Refer to skid assembly drawing 24590-CM-POA-MS00-00020-03-00007, data sheet 24590-CM-POA-MS00-00020-06-00001, calculation 24590-CM-POA-MS00-00020-07-00002, and material description 24590-CM-POA-MS00-00020-08-00001.

The hot water skids supply hot water to heat the decontamination vessels. One skid is provided for each decontamination vessel. Each skid has an overall space envelope of 119 in. L x 60 in. W x 92.375 in. H. (24590-CM-POA-MS00-00020-03-00007) Major equipment includes a steam heated exchanger, water pump, air separator, head vessel and pump controls. [3.6.4.2]

The hot water flowrate is constant. The decontamination vessel has a temperature controller to maintain the desired decontamination solution temperature. The temperature controller output modulates a flow control valve on the steam inlet line to the exchanger. Increasing the steam flow increases the temperature of the hot water supplied to the coil in the decontamination vessel. The heat transferred is determined by the difference between the average hot water temperature in the coil and the decontamination solution temperature.

4.1.1.6.2.3.1 Hot Water Heater Exchangers

Component Tag Numbers: *24590-HLW-ME-HDH-HX-00001/00002*

The exchanger is 6.625 in. OD by 64 in. long with 24, 3/4 in. diameter, 42 in. long tubes. Heat exchange area is 12.9 ft^2. The shell is 316L stainless steel and the tubes are 316 SS tubes. The vessel is designed, fabricated and stamped in accordance with ASME Boiler & Pressure Vessel Code, Section VIII. The tube side maximum allowable working pressure (MAWP) is 150 psig at 210°F. The shell side MAWP is 135 psig at 358°F (24590-CM-POA-MS00-00020-08-00001). Both sides have dual pressure relief valves (one online, one offline). The shell side PSVs are set at 135 psig and the tube side PSVs are set at 150 psig (24590-HLW-M6-HDH-00004001 and 20002001, 24590-WTP-SDDR-MS-12-00001)

Hot water flows in the tube side. Steam flows into the shell side and steam condensate out of the shell side. The exchanger maximum design condition is to heat 14 gpm water from 73 to 185°F using 880 lb/hr of 100 psig steam and heat duty of 783,000 Btu/hr. (24590-CM-POA-MS00-00020-07-00002) [3.5.3.12]

The expected operating condition (to be established during commissioning) is to supply 8 gpm of water at 180°F to the decontamination vessel coil. By energy balance, the exchanger heat duty equals the heat transferred from the decontamination vessel coil. The heat transferred from the coil is calculated to be about 400,000 Btu/hr at start of heatup, decreases as the canister decontamination vessel heats up, and is 100,000 Btu/hr during steady state decontamination at 149°F. (24590-HLW-MEC-HDH-00001)

4.1.1.6.2.3.2 Hot Water Pumps

Component Tag Numbers: 24590-HLW-MP-HDH-PMP-00026/00027

The hot water pump circulates water between the hot water heat exchanger and the decontamination vessel coil. The pump is an inline multistage centrifugal pump that is rated at 14 gpm 249 ft TDH. Normal flow is 8 gpm 110

ft TDH. (24590-CM-POA-MS00-00020-06-00001) The pump dead head is 340 ft TDH at zero flow. (24590-CM-POA-MS00-00020-08-00001) The pump has an adjustable speed drive to manually adjust the flowrate.

4.1.1.6.2.3.3 Hot Water Head Vessels

Component Tag Numbers: 24590-HLW-MV-HDH-VSL-00007/00009

A head vessel is located downstream of the exchanger to maintain system pressure and provide for liquid expansion. The vessel is a 12 in. dia x 22 in. high, 10 gallon, 316 SS tank with an internal bladder. The vessel is designed, fabricated and stamped in accordance with ASME Boiler & Pressure Vessel Code, Section VIII. The MAWP is 200 psig at 450°F. (24590-CM-POA-MS00-00020-08-00001) The space between the bladder and tank shell is pressurized with instrument service air. The vessel has dual pressure relief valves set at 150 psig.

4.1.1.6.2.4 Valves

4.1.1.6.2.4.1 Control Valves

Control valves are normally closed and opened only when performing their necessary operation. All of the control valves in the HDH system are ball valves and each control valve is surrounded by isolation valves. These allow the valve to be isolated for change out or maintenance as necessary. All of the control valves fail closed. During normal operations, all of these valves are operated remotely from a control area.

The steam control valve (TV-0119B/0219B) for the hot water heater exchanger is a modulating flow control globe valve.

4.1.1.6.2.4.2 Isolation Valves

Isolation valves are used throughout the HLW Facility to isolate pieces of equipment for maintenance. The isolation valves are normally open and close only when maintenance is needed on the equipment the valves are isolating. These valves are used during off-normal and maintenance operations and are operated manually in place.

4.1.1.6.2.4.3 Check Valves

Check valves are placed throughout the HDH system to prevent back-flow from various tanks and vessels. Check valves are used to prevent liquids and gases from reaching the non-radioactive decontamination reagents room.

4.1.1.6.2.4.4 Pressure Control Valves

Pressure control valves are used to control the pressure of a line. These valves are set and operated manually in place.

4.1.1.6.2.5 Utilities

Instrument service air, breathing air, plant wash water, plant cooling water, reagents (nitric acid, demineralized water, ceric nitrate and sodium hydroxide) and steam are delivered to in-cave equipment via racks, joggle wall boxes, and valve manifolds located out cave in C2 or C2/C3 areas. Process steam (e.g., transfer ejectors) is supplied via steam rack HDH-RK-00009.

4.1.1.6.3 Design Considerations

4.1.1.6.3.1 Material Requirements

When considering materials selection, although not intended as an exhaustive list, the following characteristics were addressed:

a) Corrosion

b) Erosion

c) Surface finish

d) Radiation tolerance

e) Density

f) Hardness

g) Temperature characteristics

h) Friction / Wear / Lubrication

i) Tensile strength

j) Compressive strength

Materials that contact the canister are stainless steel with the exception of the decontamination vessels, which are titanium.

4.1.2 Boundaries and Interfaces

The following table contains a listing of all interfacing systems by system number and identifies the nature of the interface. [3.4.3]

Table 4-1: System HDH Interfaces

HDH Interfaces With	Nature of Interface
HPH – Canister Pour Handling	Supplies filled, sealed, glass canister for decontamination (24590-HLW-M7-HDH-00001004)
HEH – Canister Export Handling	Receives decontaminated filled canisters for storage and export. (24590-HLW-M7-HDH-00001003)
DIW – Demineralized Water System	Supplies water to the canister decontamination vessels and maintenance area spray lances. (24590-HLW-M6-DIW-00001003)
FPW – Fire Protection Water	Supplies fire protection water to the HDH glovebox.
HPS/SCW – High Pressure Steam and Steam Condensate Water System	Supplies high pressure steam to the hot water heaters and steam ejectors. Receives steam condensate from the hot water heaters. (24590-HLW-M6-HPS-00001002 and 24590-HLW-M6-NLD-00002001)
ISA – Instrument Service Air	Supplies instrument air to the spargers in the decontamination vessels and waste neutralization vessel, rinse bogie vessel inflatable seal, ejector steam line, and instrumentation and control valves. (24590-HLW-M6-ISA-00002002)
LTE – Lighting Electrical System	Provides lighting to the HDH rooms, tunnels, and caves.
LVE – Low Voltage Power	Supplies electrical power to the canister rinse tunnel and bogie maintenance area, canister decontamination cave and crane maintenance area, and canister storage transfer tunnel equipment.
MHJ –Mechanical Handling Control	Provides control of the canister rinse bogie, canister transfer hatches and posting port, decontamination vessel lids, telerobotic manipulator, elevator and turntable, decontamination cave crane, the crane maintenance area and bogie maintenance area shield doors, and canister storage transfer bogie.
NAR– Nitric Acid Reagent System	Supplies 1 M Nitric Acid to the canister decontamination vessels. (24590-HLW-M6-NAR-

	00001002)
PCJ– Process Control	Provides control of the canister rinse bogie vessel, decontamination vessels, waste neutralization vessel, cerium 4+ addition tank, hot water skids, and associated process equipment.
PCW – Plant Cooling Water System	Provides cooling water supply and return for the decontamination vessel coils. (24590-HLW-M6-PCW-00001001)
PJV – HLW Pulse Jet Vent System	Provides ventilation for the canister decontamination vessels. (24590-HLW-M6-PJV-00001001)
PTJ – CCTV System	Provides remote viewing of activities in the canister rinse tunnel, canister decontamination cave, canister storage transfer tunnel, and the maintenance areas. (24590-HLW-J0-PTJ-00001 to 00006)
PVV – Process Vessel Vent Exhaust System	Provides ventilation for the waste neutralization vessel. (24590-HLW-M6-PVV-00001)
PWD – Plant Wash and Disposal System	Supplies demineralized water to the canister bogie rinse vessel for canister rinsing. As needed, system PWD provides demineralized water or nitric acid to clean the canister bogie rinse vessel, waste neutralization vessel, and canister decontamination demister. (24590-HLW-M6-PWD-00004001)
RLD – Radioactive Liquid Waste	Receives treated waste from the waste neutralization vessel. Receives liquid waste in the HDH sumps. (24590-HLW-M6-RLD-00001002)
SHR – Sodium Hydroxide Reagent System	Supplies 5 M Sodium Hydroxide to the waste neutralization vessel. (24590-HLW-M6-SHR-00001002)
UPE – Uninterruptible Power Electrical System	Supplies uninterruptible power to the HDH posting port.

4.1.3 Physical Layout and Location

The HDH system is located in the southeast portion of the HLW building as follows:

Canister Rinse Tunnel (H-B039B), which runs west/east at –16 ft 6 in. elevation. Separated by a horizontal shield door is the Canister Rinse Bogie Maintenance Area (H-B039A) at –16 ft elevation.

Canister Decontamination Cave, which runs south/north at –16 ft (H-B035) and 0 ft (H-0133) elevations. Separated by a vertical shield door is the Crane Maintenance Area (H-0313A) at +20 ft elevation.

Canister Storage Transfer Tunnel, which runs west/east at –31 ft elevation

Refer to drawings 24590-HLW-P1-P01T-00001, 00002, 0003, and 0004, *HLW Vitrification Building General Arrangement Plan EL. -21'-0"/0'-0"/14'-0"/37'-0"*

Refer to drawings 24590-HLW-P1-P23T-00015, 00016, 00020, and 00021, *HLW Vitrification Building Equipment Location Plan EL. -21'-0"*; 24590-HLW-P1-P23T-00110, 00115, 00116, 00120, and 00121, *HLW Vitrification Building Equipment Location Plan EL.0'-0"*; 24590-HLW-P1-P23T-00210 and 00215, *HLW Vitrification Building Equipment Location Plan EL.14'-0"*, for equipment locations.

Refer to drawings 24590-HLW-A5-A19T-05200001, 24590-HLW-A5-A19T-05201001 and 24590-HLW-A5-A19T-05202001, *HLW Vitrification Building Architectural Room Finish Schedule*, for room finish details.

To comply with ALARA and operational requirements, the canister decontamination handling system provides shielding from high levels of radiation, and facilitates contamination control. The building envelope enclosing potentially radioactive areas (non C-1) of the HDH system is designed, in conjunction with the HVAC systems, to provide confinement for normal operations, anticipated operational occurrences, and accident conditions. Contamination is controlled by cascading air from areas of lower contamination potential to areas of higher contamination potential.

4.1.4 Principles of Operation

4.1.4.1 Canister Decontamination System Description

Refer to process flow diagram 24590-HLW-M5-V17T-00006 and mass balance calculation 24590-HLW-M4C-HDH-00001.

This system consists of all items associated with the decontamination of a sealed, product canister, and the measurement of surface contamination level through swabbing, swab monitoring, and recording of swab data. To isolate workers from the high radiation fields associated with the vitrified waste, all equipment used to process the waste canisters is located inside a shielded cave. All process piping is sloped to vessels to assure that fluids and solids can be flushed and drained from the piping.

One IHLW canister holds 3 MTG (24590-WTP-DB-ENG-01-001). The HDH system will begin operations at two canisters per day, based on the facility throughput of 6.0 MTG per day. After 5 years, production is expected to increase to 2 ½ canisters a day, based on the facility throughput of 7.5 MTG per day based on a second-generation melter design [3.4.1.1]. The decontamination of one canister is expected to take approximately 18 hours. Two decontamination vessels allow for an overlap of decontamination steps to meet the throughput of 2 canisters per day. The simplified process flow diagram, Figure 4-30, depicts the overall inputs to the process equipment, the system products, and the destination of the system products.

Figure 4-30: Simplified Process Flow Diagram for the HLW Canister Decontamination System

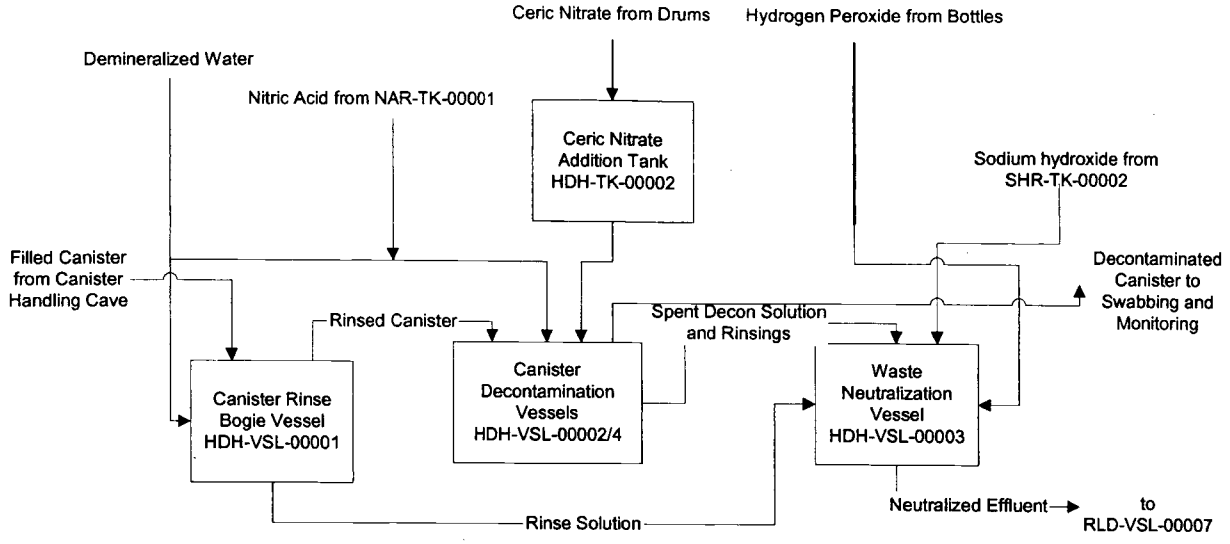

4.1.4.2 Canister Rinsing and Etching

The canister is initially washed with low pressure demineralized water to remove any loose contamination that may be spread into the C3 canister decontamination cave from the C5 canister handling cave (interfacing system HPH)[3.5.4.3]. The water wash is performed in a vessel (HDH-VSL-00001) mounted on a transfer bogie, which travels in a tunnel between the Canister Handling Cave (system HPH) and Canister Decontamination Cave.

After the water rinse, the canister is transferred to a decontamination vessel (HDH-VSL-00002/00004) in the decontamination cave. Decontamination is performed by chemically etching stainless steel from the canister surface using a mixture made of 1M nitric acid reagent and 0.5M ceric nitrate reagent (cerium (IV) nitrate). [3.5.3.4] The decontamination vessel is located in front of a shielded viewing window. The overhead bridge crane in the cave is used when performing canister transfer operations.

Decontamination of the IHLW canisters (type 304L stainless steel) is achieved through a chemical dissolution of the oxide layer and a thin layer of metal from the canister surface. The chemical dissolution reaction takes place when the canister is soaked in the decontamination solution at 149 ± 5 °F for 6 hours (PNL-8223) while gentle air sparging, 5 scfm, agitates the solution.

The following reactions take place to remove the oxide layer from the canister:

$$Fe_2O_3 + 6\,HNO_3 \rightarrow 2\,Fe^{+3} + 6\,NO_3^- + 3\,H_2O$$
$$NiO + 2\,HNO_3 \rightarrow Ni^{+2} + 2\,NO_3^- + H_2O$$
$$Cr_2O_3 + 6\,HNO_3 \rightarrow 2\,Cr^{+3} + 6\,NO_3^- + 3\,H_2O$$

The cerium reagent etches stainless steel; therefore, the thickness of the layer of stainless steel removed from the canister is controlled by the amount of cerium reagent available. The amount of cerium reagent used in the process (20 gal) (24590-HLW-MVC-HDH-00005) limits the thickness of the layer removed to a nominal 0.00039 inches (10 μm). The reactions that take place to dissolve a thin layer of type 304L stainless steel (an alloy of iron, nickel, and chromium) are:

$$Fe + 3\ Ce^{+4} \rightarrow Fe^{+3} + 3\ Ce^{+3}$$
$$Ni + 2\ Ce^{+4} \rightarrow Ni^{+2} + 2\ Ce^{+3}$$
$$Cr + 6\ Ce^{+4} \rightarrow Cr^{+6} + 6\ Ce^{+3}$$

The decontamination of the canister is followed by a 1 M nitric acid spray and a demineralized water spray.

The decontamination effluent is transferred to the waste neutralization vessel (HDH-VSL-00003). At the same time, 30% hydrogen peroxide reagent is added to convert any unreacted ceric nitrate to cerous nitrate. This ensures the decontamination effluent does not etch the stainless steel waste neutralization vessel or any downstream stainless steel vessels or piping. The reduction reaction is:

$$2\ Ce^{+4} + H_2O_2 \rightarrow 2\ Ce^{+3} + 2\ H^{+} + O_2$$

5 M Sodium hydroxide is added to the waste neutralization vessel to bring the solution to pH 8 before transfer to the RLD system.

4.1.4.3 Canister Swabbing and Monitoring

After decontamination, the canister is removed from the decontamination vessel, visually inspected for glass spatter, and swabbed using a programmable telerobotic manipulator. The swabs are transferred through the posting port using a shielded tray with intermediate gamma monitoring. The swabs are then hand monitored inside a glovebox to obtain surface contamination information. Swabs that are too contaminated to enter the glovebox are temporarily stored in the in-cave wastebasket until a cave entry is due to be made.

The canister is dimensionally checked using the telerobotic manipulator. The canister weight is measured by the load cell assembly attached between the crane hook and canister grapple. When surface cleanliness has been verified, the canister is placed into a bogie located in the canister storage transfer tunnel below the decontamination cave floor. This bogie travels to a position below the C3 Canister Export Cave (System HEH). System HDH also provides for the possibility of extending the Canister Storage Transfer tunnel to a future additional storage vault.

Additional discussion of system operations is provided in Section 4.2.

4.1.5 System Reliability Features

RESERVED

4.1.6 System Control Features

4.1.6.1 System Monitoring

The following table shows the process instrumentation indicators for monitoring operations.

Table 4-2: System Monitoring Instrumentation

Equipment No.	Instrument No.		Indication	Remarks
HDH-VSL-00001 Canister Rinse Bogie Vessel	HDH-FI-0158		Plant Wash Flowrate (DI water for rinsing)	L alarm
	HDH-FQI-0158		Plant Wash Totalized Flow	H interlock

Equipment No.	Instrument No.		Indication	Remarks
	HDH-LI-0161		Vessel Liquid Level before f(x)	
	HDH-LI-0161A		Vessel Liquid Level	L, H, HH interlocks
	HDH-ZI-0131		Plant Wash Valve Open/Closed	
	HDH-ZI-0159		Upper Spray Ring Valve Open/Closed	
	HDH-ZI-0160		Lower Spray Ring Valve Open/Closed	
	HDH-ZI-0182		Drain Valve Open/Closed	
HDH-VSL-00002 Canister Decontamination Vessel	HDH-DI-0117		Vessel Liquid Density	
	HDH-FI-0152		Instrument Service Air to Sparger Flow	L alarm
	HDH-FI-0412		Hot/Cooling Water Return Flow	L and LL alarms, LL interlock
	HDH-LI-0118		Vessel Liquid Level before f(x)	
	HDH-LI-0118A		Vessel Liquid Level	HH, HHH alarms, LL and HHH interlock
	HDH-LI-0118B		Vessel Liquid Level	H interlock
	HDH-PDI-0148		Vessel Coil Pressure Drop	H alarm
	HDH-PI-0129		Vessel Pressure	
	HDH-TI-0119		Vessel Temperature	
	HDH-TI-0146		Vessel Temperature	
	HDC-TI-0119B		Vessel Temperature (high selected)	H and HH alarms, HH interlock
	HDH-ZI-0177		Instrument Service Air to Sparger Valve Open/Closed	
	HDH-ZI-0178		Spray Ring Supply Valve Open/Closed	
	HDH-ZI-0401		Cooling Water Return Valve Open/Closed	
	HDH-ZI-0416		Hot Water Supply Valve Open/Closed	
	HDH-ZI-0417		Cooling Water Supply Valve Open/Closed	
	HDH-ZI-0418		Hot Water Return Valve Open/Closed	
HDH-EJCTR-00003A Steam Ejector	HDH-ZI-0173		Steam Valve to Ejector Open/Closed	
HDH-EJCTR-00003B	HDH-ZI-0172		Steam Valve to Ejector	

Equipment No.	Instrument No.		Indication	Remarks
Steam Ejector			Open/Closed	
HDH-VSL-00002 or 00004 Canister Decontamination Vessel	HDH-FI-0142		Nitric Acid Flow	
	HDH-FQI-0142		Nitric Acid Total Flow	
	HDH-PI-0145		Demineralized Water Pressure	Local gauge
	HDH-PI-0150		Instrument Service Air to Sparger Pressure	
	HDH-ZI-0110		Demineralized Water Supply Valve Open/Closed	
	HDH-ZI-0116		Nitric Acid Supply Valve Open/Closed	
HDH-VSL-00004 Canister Decontamination Vessel	HDH-DI-0217		Vessel Liquid Density	
	HDH-FI-0252		Instrument Service Air to Sparger Flow	L alarm
	HDH-FI-0512		Hot/Cooling Water Return Flow	L and LL alarms, LL interlock
	HDH-LI-0218		Vessel Liquid Level before f(x)	
	HDH-LI-0218A		Vessel Liquid Level	HH, HHH alarms, LL and HHH interlocks
	HDH-LI-0218B		Vessel Liquid Level	H interlock
	HDH-PDI-0248		Vessel Coil Pressure Drop	H alarm
	HDH-PI-0229		Vessel Pressure	
	HDH-TI-0219		Vessel Temperature	
	HDH-TI-0246		Vessel Temperature	
	HDC-TI-0219B		Vessel Temperature (high selected)	H and HH alarms HH interlock
	HDH-ZI-0216		Spray Ring Supply Valve Open/Closed	
	HDH-ZI-0277		Instrument Service Air to Sparger Valve Open/Closed	
	HDH-ZI-0501		Cooling Water Return Valve Open/Closed	
	HDH-ZI-0516		Hot Water Supply Valve Open/Closed	
	HDH-ZI-0517		Cooling Water Supply Valve Open/Closed	
	HDH-ZI-0518		Hot Water Return Valve Open/Closed	
HDH-EJCTR-00056A	HDH-ZI-0273		Steam Valve to Ejector	

Equipment No.	Instrument No.		Indication	Remarks
Steam Ejector			Open/Closed	
HDH-EJCTR-00056B Steam Ejector	HDH-ZI-0272		Steam Valve to Ejector Open/Closed	
HDH-VSL-00003 Waste Neutralization Vessel	HDH-FI-0166		Instrument Service Air to Sparger Flow	L alarm
	HDH-FI-0181		Sodium Hydroxide Flow	
	HDH-FQI-0181		Sodium Hydroxide Total Flow	H interlock
	HDH-LI-0125		Liquid Level before f(x)	
	HDH-LI-0125A		Liquid Level	LL, LLL, H, HH alarms LLL, HH interlocks
	HDH-LI-0121		Hydrogen Peroxide Liquid Level before f(x)	
	HDH-LI-0121A		Hydrogen Peroxide Liquid Level	L alarm and interlock
	HDH-PI-0130		Vessel Pressure	
	HDH-PI-0165		Instrument Service Air to Sparger Pressure	Local gauge
	HDH-PI-0167		Instrument Service Air to Sparger Pressure	Local gauge
	HDH-TI-0126		Vessel Temperature	H, HH alarms HH interlock
	HDH-ZI-0136		Hydrogen Peroxide Supply Valve Open/Closed	
	HDH-ZI-0179		Sodium Hydroxide Supply Valve Open/Closed	
	HDH-ZI-0180		Plant Wash Supply Valve Open/Closed	
HDH-EJCTR-00002A Steam Ejector	HDH-ZI-0175		Steam to Ejector Valve Open/Closed	
HDH-EJCTR-00002B Steam Ejector	HDH-ZI-0174		Steam to Ejector Valve Open/Closed	
HDH-EJCTR-00057 Steam Ejector	HDH-ZI-0176		Steam to Ejector Valve Open/Closed	
HDH-TK-00002 Cerium IV Addition Tank	HDH-LI-0109		Tank Liquid Level before f(x)	
	HDH-LI-0109A		Tank Liquid Level	L interlock
	HDH-ZI-0111		Ceric Nitrate to VSL-00002 Valve Open/Closed	
	HDH-ZI-0212		Ceric Nitrate to VSL-00004 Valve Open/Closed	

Equipment No.	Instrument No.		Indication	Remarks
HDH-DMST-00001 Canister Decon Demister	HDH-PDI-0284		Demister Pressure Drop	
	HDH-ZI-0285		Plant Wash Valve Open/Closed	
HDH-SKID-00001 Hot Water Heating System Skid	HDH-PI-0411		Hot Water Pump HDH-PMP-00026 Discharge Pressure	Local gauge
	HDH-PI-0419		Hot Water Head Vessel HDH-VSL-00007 Pressure	Local gauge
	HDH-TI-0413		Hot Water Supply Temperature	H and HH alarms, HH interlock
HDH-SKID-00002 Hot Water Heating System Skid	HDH-PI-0511		Hot Water Pump HDH-PMP-00027 Discharge Pressure	Local gauge
	HDH-PI-0519		Hot Water Head Vessel HDH-VSL-00009 Pressure	Local gauge
	HDH-TI-0513		Hot Water Supply Temperature	H and HH alarms, HH interlock
HDH-RK-00009 Steam Rack	HPS-LSH-3170		Steam Supply Pipe Condensate Level High	
	ISA-PDI-3091		Instrument Service Air / Steam Differential Pressure	H interlock
	ISA-PI-3091		Instrument Service Air Pressure	L alarm
	HPS-PI-3118		Steam Supply Pressure	Local gauge
	HPS-PI-3122		Steam Supply Pressure	L alarm H interlock
	HPS-ZI-3119		Steam Supply Valve Open/Closed	
	ISA-ZI-3058		Instrument Service Air Supply Valve Open/Closed	

Note: All indications and alarms are in control room DCS, unless otherwise noted.

4.2 Operations

RESERVED

4.2.1 Initial Configuration (Pre-startup)

RESERVED

4.2.2 System Startup

RESERVED

4.2.3 Normal Operations

RESERVED

4.2.4 Off-Normal Operations

RESERVED

4.2.5 System Shutdown

RESERVED

4.2.6 Safety Management Programs and Administrative Controls

RESERVED

4.3 Testing and Maintenance

RESERVED

4.3.1 Temporary Configurations

RESERVED

4.3.2 TSR-Required Surveillances

RESERVED

4.3.3 Non-TSR Inspections and Testing

RESERVED

4.3.4 Maintenance

RESERVED

4.4 Supplemental Information

RESERVED

5 References

5.1 Source / Basis References

Document Number	Rev	Title	Text Reference
24590-HLW-PL-RT-07-0001	3	*IHLW Waste Form Compliance Plan for the Hanford Tank Waste Treatment and Immobilization Plant*	IHLW Waste Form Compliance Plan
24590-HLW-RPT-ESH-01-001	5	*Preliminary Fire Hazards Analysis for the High-Level Waste Building*	PFHA – HLW Facility
24590-HLW-RPT-PR-01-001	12	*Waste Acceptance Impacting Items and Activities*	WAI Items and Activities
24590-HLW-WIQP-MH-09-0002	0	*HLW Canister Racks*	WAI Qualification Plan for Canister Racks
24590-HLW-WIQP-MH-09-0003	0	*HLW Standardized Bogie*	WAI Qualification Plan for HLW Standardized Bogies
24590-HLW-WIQP-MH-09-0005	0A	*HLW Canister Rinse Bogie Decon Vessel*	WAI Qualification Plan for Canister Rinse Bogie Decontamination Vessel
24590-HLW-WIQP-MH-09-0006	0A	*Canister Grapple*	WAI Qualification Plan for Canister Grapple
24590-HLW-WIQP-MH-10-0001	2	*Canister Swabbing*	WAI Qualification Plan for Canister Swabbing
24590-HLW-WIQP-MH-12-0001	0	*Canister Grapple Load Cells*	WAI Qualification Plan for Canister Grapple Load Cells
24590-HLW-WIQP-MH-12-0002	0	*Swabbing Manipulator and Load Cell*	WAI Qualification Plan for Swabbing Manipulator and Load Cell
24590-HLW-WIQP-MS-10-0001	0A	*HLW HDH Decontamination Vessels*	WAI Qualification Plan for Decontamination Vessels
24590-HLW-WSF-ENG-07-002	4	*WTP HLW Canister Processing Activities*	WTP HLW Canister Processing Activities
24590-HLW-WSF-ENG-07-003	4	*WTP HLW Canister Handling*	WTP HLW Canister
24590-WTP-DB-ENG-01-001	2	*Basis of Design*	BOD
24590-WTP-DB-PET-09-001	1	*Process Inputs Basis of Design*	Process Inputs Basis of Design
24590-WTP-GPG-M-0058	0A	*Minimum Flow Velocity for Slurry Lines*	Minimum Flow Velocity for Slurry Lines
24590-WTP-PL-RACT-RT-0001	0	*WTP Remotability Verification Plan*	*WTP Remotability Verification Plan*
24590-WTP-PSAR-ESH-01-002-01	5D	*Preliminary Documented Safety*	PDSA - General

Document Number	Rev	Title	Text Reference
		Analysis to Support Construction Authorization; General Information	
24590-WTP-PSAR-ESH-01-002-04	5D	*Preliminary Documented Safety Analysis to Support Construction Authorization; HLW Facility Specific Information*	PDSA - HLW Facility
24590-WTP-QAM-QA-06-001	16	*Quality Assurance Manual*	QAM
24590-WTP-RPT-OP-01-001	5	*Operations Requirements Document*	ORD
24590-WTP-SRD-ESH-01-001-02	7C	*Safety Requirements Document, Volume II*	SRD
DE-AC27-01RV14136	M339	*Hanford Tank Waste Treatment and Immobilization Plant*, as amended	WTP Contract
WA7890008967	N/A	*Hanford Facility RCRA Permit Dangerous Waste Portion for Treatment Storage and Disposal of Dangerous Waste*	DWP

5.2 Other References

Document Number	Rev	Title
Process Flow Diagrams		
24590-HLW-M5-V17T-00006	6	*Process Flow Diagram HLW Vitrification HLW Canister Decon (System HDH)*
P&IDs		
24590-WTP-M6-50-00008	3	*P&ID SYMBOLS AND LEGEND SHEET 8 OF 8*
24590-HLW-M6-DIW-00001003	2	*P&ID - HLW DEMINERALIZED WATER SYSTEM DEMINERALIZED WATER DISTRIBUTION*
24590-HLW-M6-HDH-00001001	1	*P&ID - HLW Canister Decontamination Handling System HDH-VSL-00002*
24590-HLW-M6-HDH-00001002	1	*P&ID - HLW Canister Decontamination Handling System*
24590-HLW-M6-HDH-00002001	1	*P&ID - HLW Canister Decontamination Handling System HDH-VSL-00003*
24590-HLW-M6-HDH-00002002	0	*P&ID - HLW Canister Decontamination Handling System Transfer Ejectors*
24590-HLW-M6-HDH-00002003	1	*P&ID - HLW Canister Decontamination Handling System HDH-TRLY-00003*
24590-HLW-M6-HDH-00003001	1	*P&ID - HLW Canister Decontamination Handling System Steam Rack HDH-RK-00009*
24590-HLW-M6-HDH-00004001	0	*P&ID - HLW Canister Decontamination Handling System HDH-HX-00001*
24590-HLW-M6-HDH-00004002	0	*P&ID - HLW Canister Decontamination Handling System HDH-VSL-00007*
24590-HLW-M6-HDH-20001001	1	*P&ID - HLW Canister Decontamination Handling System HDH-VSL-00004*

Document Number	Rev	Title
24590-HLW-M6-HDH-20001002	0	*P&ID - HLW Canister Decontamination Handling System HDH-DMST-00001*
24590-HLW-M6-HDH-20002001	0	*P&ID - HLW Canister Decontamination Handling System HDH-HX-00002*
24590-HLW-M6-HDH-20002002	0	*P&ID - HLW Canister Decontamination Handling System HDH-VSL-00009*
24590-HLW-M6-HPS-00001002	0	*P&ID - HLW HIGH PRESSURE SYSTEM HP STEAM SERVICES DISTRIBUTION*
24590-HLW-M6-ISA-00002002	0	*P&ID - HLW INSTRUMENT SERVICE AIR SYSTEM DISTRIBUTION EL -21 FT -0 IN*
24590-HLW-M6-NAR-00001002	1	*P&ID - HLW NITRIC ACID REAGENT SYSTEM NITRIC ACID SUPPLY NAR-PMP-00016A*
24590-HLW-M6-NLD-00002001	1	*P&ID - HLW NON-RADIOACTIVE LIQUID WASTE DISPOSAL SYSTEM NLD-TK-00006*
24590-HLW-M6-PCW-00001001	0	*P&ID - HLW PLANT COOLING WATER SYSTEM PCW-PMP-00003A/B/C*
24590-HLW-M6-PJV-00001001	0	*P&ID - HLW PULSE JET VENTILATION SYSTEM COLLECTION AND CONDITIONING*
24590-HLW-M6-PVV-00001	4	*P&ID - HLW PROCESS VESSEL VENT EXHAUST SYSTEM SHEET 1 OF 2*
24590-HLW-M6-PWD-00004001	0	*P&ID - HLW PLANT WASH AND DISPOSAL SYSTEM PLANT WASH DISTRIBUTION RACK PWD-RK-*
24590-HLW-M6-RLD-00001002	0	*P&ID - HLW RADIOACTIVE LIQUID WASTE DISPOSAL SYSTEM RLD-VSL-00007 INSTRUMENTATION*
24590-HLW-M6-SHR-00001002	1	*P&ID - HLW SODIUM HYDROXIDE REAGENT SYSTEM SODIUM HYDROXIDE SUPPLY SHR-PMP-00013A*
Mechanical Handling Diagrams		
24590-HLW-M7-HDH-00001001	2	*HLW Vitrification System HDH Mechanical Handling Diagram Canister Decontamination Handling System*
24590-HLW-M7-HDH-00001002	2	*HLW Vitrification System HDH Mechanical Handling Diagram Canister Decontamination Handling System*
24590-HLW-M7-HDH-00001003	2	*HLW Vitrification System HDH Mechanical Handling Diagram Canister Decontamination Handling System*
24590-HLW-M7-HDH-00001004	2	*HLW Vitrification System HDH Mechanical Handling Diagram Canister Decontamination Handling System*
24590-HLW-M7-HDH-00001005	2	*HLW Vitrification System HDH Mechanical Handling Diagram Canister Decontamination Handling System*
24590-HLW-M7-HDH-00001006	0	*HLW Vitrification System HDH Mechanical Handling Diagram Canister Decontamination Handling System*
Mechanical Sequence Diagram		
24590-HLW-M1-HDH-00002	1	*Mechanical Sequence Diagram for HLW Vitrification System HDH Canister Decontamination Handling System*
General Arrangement/Equipment Location Drawings		
24590-HLW-P1-P01T-00001	9	*HLW Vitrification Building General Arrangement Plan at EL -21'-0"*
24590-HLW-P1-P01T-00002	7	*HLW Vitrification Building General Arrangement Plan at EL 0'-0"*
24590-HLW-P1-P01T-00003	8	*HLW Vitrification Building General Arrangement Plan at EL 14'-0"*
24590-HLW-P1-P01T-00004	7	*HLW Vitrification Building General Arrangement Plan at EL 37'-0"*
24590-HLW-P1-P01T-00005	6	*HLW Vitrification Building General Arrangement Plan at EL 58'-0"*
24590-HLW-P1-P01T-00006	4	*HLW Vitrification Building General Arrangement Plan at EL 72'-0"*

Document Number	Rev	Title
24590-HLW-P1-P01T-00009	11	*HLW Vitrification Building General Arrangement Sections D-D, E-E & F-F*
24590-HLW-P1-P01T-00010	11	*HLW Vitrification Building General Arrangement Sections G-G & H-H*
24590-HLW-P1-P23T-00015	6	*HLW Vitrification Building Equipment Location Plan at EL -21'-0" Area 15*
24590-HLW-P1-P23T-00016	6	*HLW Vitrification Building Equipment Location Plan at EL -21'-0" Area 16*
24590-HLW-P1-P23T-00113	4	*HLW Vitrification Building Equipment Location Plan at EL. 0'-0" / Area 113*
24590-HLW-P1-P23T-00114	5	*HLW Vitrification Building Equipment Location Plan at EL. 0'-0" / Area 114*
24590-HLW-P1-P23T-00115	6	*HLW Vitrification Building Equipment Location Plan at EL. 0'-0" / Area 115*
24590-HLW-P1-P23T-00116	3	*HLW Vitrification Building Equipment Location Plan at EL 0'-0" Area 116*
24590-HLW-P1-P23T-00210	2	*HLW Vitrification Building Equipment Location Plan at EL 14'-0" Area 210*
24590-HLW-P1-P23T-00215	2	*HLW Vitrification Building Equipment Location Plan at EL 14'-0" Area 215*
Calculations		
24590-HLW-M4C-HDH-00001	2	*HLW CANISTER DECONTAMINATION MASS AND HEAT BALANCE*
24590-HLW-M6C-HDH-00025	00A	*Process Data for HDH Demister*
24590-HLW-MEC-HDH-00001	0	*HDH-VSL-00002/4 COOLING AND HEATING COILS PROCESS INFORMATION*
24590-HLW-MVC-HDH-00005	00A	*HDH VESSEL AND TANK PROCESS DATA CALCULATION*
24590-HLW-S0C-S15T-00028	00B	*HLW CRANE DROP ANALYSIS*
Mechanical Data Sheets		
24590-HLW-M0D-HDH-00032	1	*24590-HLW-MH-HDH-MHAN-00021 - FAILED SWAB BASKET*
24590-HLW-MCD-HDH-00001	1	*24590-HLW-MP-HDH-EJCTR-00002A – Waste Neutralization Vessel (HDH-VSL-00003) Ejector*
24590-HLW-MCD-HDH-00002	1	*24590-HLW-MP-HDH-EJCTR-00003A - CANISTER DECONTAMINATION VESSEL (HDH-VSL-00002) EJECTOR*
24590-HLW-MCD-HDH-00008	1	*24590-HLW-MP-HDH-EJCTR-00057 - WASTE NEUTRALIZATION VESSEL (HDH-VSL-00003) EMPTYING EJECTOR*
24590-HLW-MVD-HDH-00003	5	*24590-HLW-MV-HDH-VSL-00003 - WASTE NEUTRALIZATION VESSEL*
24590-HLW-MVD-HDH-00006	5	*24590-HLW-MV-HDH-VSL-00002 24590-HLW-MV-HDH-VSL-00004 - CANISTER DECON VESSEL 1, 24590-HLW-MV-HDH-VSL-00002. CANISTER DECON VESSEL 2, 24590-HLW-MV-HDH-VSL-00004.*
24590-HLW-MVD-HDH-00009	1	*24590-HLW-MV-HDH-VSL-00001 - CANISTER RINSE BOGIE DECON VESSEL*
24590-HLW-MXD-30-00012	1	*24590-HLW-AD-HDH-DOOR-00003 - CANISTER STORAGE TRANSFER TUNNEL*
24590-HLW-MXD-30-00015	1	*24590-HLW-AD-HDH-DOOR-00004 - BOGIE DECON/MAINTENANCE TUNNEL-CANISTER RINSE*
24590-HLW-MXD-30-00028	1	*24590-HLW-AD-HDH-DOOR-00005 - CRANE MAINT. AREA*
24590-HLW-MXD-30-00167	1	*24590-HLW-AD-HDH-DOOR-00006 - OPERATIONS AREA*
Vendor Drawings		
24590-CM-MRA-MVA0-00007	003	*PRESSURE VESSELS, SHOP FABRICATED TITANIUM SMALL (CM) (N029) (MS012)*
24590-CM-POA-ADDH-00005-06-00260	00E	*DRAWING - HLW VITRIFICATION SYSTEM HDH CANISTER DECONTAMINATION HANDLING SYSTEM AIRLOCK DOOR HDH-DOOR-00007 GENERAL ASSEMBLY*
24590-CM-POA-MJKG-00002-06-01	00H	*DRAWING - 5 TON U/R SINGLE GIRDER CRANE #2780 - GENERAL ARRANGEMENT*
24590-CM-POA-MJKG-00002-07-01	00I	*DRAWING - 5 TON UNDERHUNG SINGLE GIRDER CRANE # 2783 - GENERAL ARRANGEMENT*

Document Number	Rev	Title
24590-CM-POA-MJKG-00002-51-04	00C	*MANUAL - OPERATING, PARTS & MAINTENANCE MANUAL 5 TON UNDER RUNNING SINGLE GIRDER CRANE - CMAA CLASS C - WIRE ROPE HOIST - RADIO OPERATED*
24590-CM-POA-MJKG-00002-51-05	00B	*MANUAL - OPERATING PARTS & MAINTENANCE MANUAL 5 TON UNDER RUNNING SINGLE GIRDER CRANE - CMAA CLASS C - WIRE ROPE HOIST - PENDANT OPERATED*
24590-CM-POA-MJKH-00002-01-00001	00E	*DRAWING - 5 TON WALL MOUNTED CANTILEVERED JIB CRANE #2853 GENERAL ARRANGEMENT*
24590-CM-POA-MJKH-00002-01-00002	00D	*DRAWING - 5 TON WALL MOUNTED CANTILEVERED JIB CRANE #2854 GENERAL ARRANGEMENT*
24590-CM-POA-MJKH-00002-10-00013	00B	*MANUAL - OPERATING, PARTS & MAINTENANCE MANUAL - 5 TON WALL MOUNTED CANTILEVERED JIB CRANE*
24590-CM-POA-MJKH-00002-10-00014	00B	*MANUAL - OPERATING, PARTS & MAINTENANCE MANUAL - 5 TON WALL MOUNTED CANTILEVERED JIB CRANE*
24590-CM-POA-MS00-00020-03-00007	00D	*DRAWING - TOP LEVEL ASSEMBLY CANISTER DECONTAMINATION HANDLING SYSTEM HDH-SKID-00002 HOT WATER SKID*
24590-CM-POA-MS00-00020-06-00001	00B	*DATA SHEET - COMPLETED BECHTEL DATA SHEETS HDH-HOT WATER HEATING SKIDS 00001 & 00002 (N283)*
24590-CM-POA-MS00-00020-07-00002	00A	*REPORT - ANALYSIS, CALCULATION, AND DESIGN REPORT - HDH-HOT WATER HEATING SKIDS 00001 & 00002 (N283)*
24590-CM-POA-MS00-00020-08-00001	00B	*MATERIAL DESCRIPTION - HDH-HOT WATER HEATING SKIDS 00001 & 00002 (N283)*
24590-CM-POA-MVA0-00008-02-00001	00I	*DRAWING - CANISTER DECONTAMINATION VESSEL 1 24590-HLW-MV-HDH-VSL-00002*
24590-CM-POA-MVA0-00008-02-00004	00H	*DRAWING - CANISTER DECONTAMINATION VESSEL 1 24590-HLW-MV-HDH-VSL-00002, FAB DETAILS*
24590-CM-POA-MVA0-00008-02-00006	00H	*DRAWING - CANISTER DECONTAMINATION VESSEL 1 24590-HLW-MV-HDH-VSL-00002, FAB DETAILS*
24590-CM-POA-MVA0-00008-02-00019	00C	*DRAWING - CERIUM 4+ ADDITION TANK 24590-HLW-MT-HDH-TK-00002*
24590-CM-POA-MVA0-00018-02-00001	00G	*DRAWING - GENERAL ARRANGEMENT - VESSEL HDH-VSL-00003 - WASTE NEUTRALIZATION VSL*
24590-CM-POA-MVA0-00018-02-00012	00I	*DRAWING - NOZZLE DETAILS - VESSEL HDH-VSL-00003 - WASTE NEUTRALIZATION VSL*
24590-QL-POA-ADDB-00001-09-01	00I	*DOOR ASSEMBLY PREMIER SHOP #C-4663-NQA1 LEFT HAND SHIELDED PERSONNEL ACCESS DOOR 12 INCH THICK. 48 INCH WALL C4663-M-001-1*
24590-QL-POA-ADDB-00001-09-29	00I	*DRAWING - DOOR ASSEMBLY RIGHT HAND SHIELDED PERSONNEL ACCESS DOOR 3" THK.*
24590-QL-POA-ADDB-00001-09-43	00E	*DRAWING - DOOR ASSEMBLY - LEFT HAND SHIELDED PERSONNEL ACCESS DOOR 12 INCH THK. 48 INCH WALL*
24590-QL-POA-ADDB-00001-09-00077	00B	*DRAWING - DOOR SCHEDULE SHIELDED PERSONNEL ACCESS DOORS*
24590-QL-POA-ADDH-00003-06-00033	00D	*DRAWING - HLW HATCHES STANDARDIZED TRANSFER - HATCH ASSEMBLY*
24590-QL-POA-ADDH-00003-06-00056	00D	*DRAWING - HLW HATCHES STANDARDIZED TRANSFER CANISTER DECONTAMINATION CAVE IMPORT HATCH HATCH DRIVE ASSEMBLY*

Document Number	Rev	Title
24590-QL-POA-ADDH-00003-06-00126	00C	*DRAWING - HATCH ASSEMBLY*
24590-QL-POA-ADDH-00006-05-317	00F	*DRAWING - HIGH LEVEL WASTE FACILITY CANISTER RINSE BOGIE DECONTAMINATION / MAINTENANCE SHIELD DOOR - GENERAL ARRANGEMENT*
24590-QL-POA-ADDH-00006-05-318	00D	*DRAWING - HIGH LEVEL WASTE FACILITY CANISTER RINSE BOGIE DECONTAMINATION / MAINTENANCE SHIELD DOOR - GENERAL ARRANGEMENT*
24590-QL-POA-ADDH-00006-05-320	00H	*DRAWING - HIGH LEVEL WASTE FACILITY CANISTER RINSE BOGIE DECONTAMINATION / MAINTENANCE SHIELD DOOR - GENERAL ASSEMBLY*
24590-QL-POA-ADDH-00007-05-00894	00A	*DRAWING - ENGINEERING DRAWING PACKAGE FOR HDH-DOOR-00002*
24590-QL-POA-EMM3-00001-14-00018	00H	*DRAWING - RECOVERY PLUG ASSEMBLY*
24590-QL-POA-FH00-00001-03-00001	00F	*DRAWING - HLW CANISTER GRAPPLE - GRAPPLE STAND ARRANGEMENT*
24590-QL-POA-FH00-00001-03-00007	00G	*DRAWING - HLW CANISTER GRAPPLE - GRAPPLE ARRANGEMENT*
24590-QL-POA-HDYR-00001-04-00003	00D	*FUNCTIONAL TEST - SWAB TELEROBOTIC MANIPULATOR*
24590-QL-POA-HDYR-00001-05-00001	00E	*DRAWING - GENERAL ARRANGEMENT DRAWING*
24590-QL-POA-HDYR-00001-05-00005	00D	*DRAWING - CANISTER SWABBING TURNTABLE*
24590-QL-POA-HDYR-00001-05-00010	00B	*DRAWING - CANISTER GUIDE ASSEMBLY*
24590-QL-POA-HDYR-00001-05-00127	00B	*DRAWING - ASSEMBLY - THRU WALL DRIVE*
24590-QL-POA-HDYR-00001-05-00139	00B	*DRAWING - VERTICAL ELEV RAILS - ASSY - VERTICAL RAIL WELDMENT*
24590-QL-POA-HDYR-00001-05-00199	00B	*DRAWING - SWABBING TOOL - SWAB BODY*
24590-QL-POA-M000-00002-06-00028	00H	*DRAWING - POSTING EQUIPMENT L/DS POSTING PORTS & GLOVEBOXES - G.B. #1 & P.P. #1 (ITS) P.P. HLW-DD-HDH-TWDVC-00002 G.B. HLW-MH-HDH-MHAN-00001*
24590-QL-POA-M000-00002-06-00103	00D	*DRAWING - POSTING EQUIPMENT L/DS POSTING PORTS & GLOVEBOXES - OUT-CAVE DOOR 48" ASSEMBLY*
24590-QL-POA-M000-00002-06-00167	00F	*DRAWING - POSTING EQUIPMENT L/DS POSTING PORTS & GLOVEBOXES 48" WALL, RH OFFSET, RH HINGE*
24590-QL-POA-MJKG-00002-08-00441	00E	*DRAWING - 6 TON T/R CRANE NUMBER 2798 - GENERAL ARRANGEMENT, ELEVATION VIEW*
24590-QL-POA-MJW0-00003-03-00041	00E	*ECI - DRAWING - LAYOUT FOR RPP-WTP HLW FACILITY HPH SYSTEMS*
24590-QL-POA-MQTS-00001-05-00436	00D	*DRAWING - SYSTEM HDH CANISTER STOR XFER BOGIE ARRANGEMENT*
24590-QL-POA-MQTS-00002-01-123	00G	*DRAWING - VESSEL FABRICATION*
24590-QL-POA-MQTS-00002-01-127	00P	*DRAWING - DECONTAMINATION VESSEL ASSEMBLY*
24590-QL-POA-MQTS-00002-01-148	00K	*DRAWING - CANISTER RINSE BOGIE ASSEMBLY*

Document Number	Rev	Title
24590-QL-POA-MQTS-00002-01-00245	00E	*DRAWING - GENERAL ARRANGEMENT OF WTP - HLW CANISTER RINSE BOGIE ASSEMBLY*
24590-QL-POA-MQTS-00002-01-00258	00B	*DRAWING - VESSEL FABRICATION*
24590-QL-POA-MQTS-00002-06-00003	00A	*DATA SHEET - MECHANICAL SYSTEMS DATA SHEET: ASME/ANSI GENERAL CENTRIFUGAL PUMP*
24590-QL-POA-MQTS-00002-08-00001	00E	*TEST - HLW RINSE BOGIE OPERATIONAL TEST*
24590-QL-POA-SY00-00003-06-00381	00D	*DRAWING - PROJECT 458 HLW SYSTEM HDH DECON CANISTER RACK - DECON CANISTER RACK*
Other Instrument Diagrams		
24590-HLW-JJ-PCJ-00001	A	*River Protection Project Waste Treatment Plant Control System Architecture Diagram HLW*
24590-HLW-J0-PTJ-00001	2	*HLW Vitrification System PTJ Supplemental Instr Diagram CCTV Equipment Plan At EL. -21'-0"*
24590-HLW-J0-PTJ-00002	2	*HLW Vitrification System PTJ Supplemental Instr Diagram CCTV Equipment Plan At EL. -0'-0"*
24590-HLW-J0-PTJ-00003	3	*HLW Vitrification System PTJ Supplemental Instr Diagram CCTV Equipment Plan At EL. -14'-0"*
24590-HLW-J0-PTJ-00004	1	*HLW Vitrification System PTJ Supplemental Instr Diagram CCTV Equipment Plan At EL. 37'-0"*
24590-HLW-J0-PTJ-00005	1	*HLW Vitrification System PTJ Supplemental Instr Diagram CCTV Equipment Plan At EL.58'-0"*
24590-HLW-J0-PTJ-00006	2	*HLW Vitrification System PTJ Supplemental Instr Diagram CCTV Camera Tables*
Design Proposal Drawings		
24590-HLW-M0-HDH-00033001	1	*ECI - HLW VITRIFICATION SYSTEM HDH DESIGN PROPOSAL DRAWING CANISTER SWABBING AND MONITORING ARRANGEMENT*
24590-HLW-M0-HDH-00004001	4	*HLW VITRIFICATION SYSTEM HDH DESIGN PROPOSAL DRAWING CANISTER DECON CAVE IMPORT HATCH ARRANGEMENT*
24590-WTP-M0-10-00014	3	*WTP VITRIFICATION SYSTEM DESIGN PROPOSAL DRAWING MSM MANIPULATION DIMENSIONS*
Equipment Lists		
24590-HLW-M0X-M40T-00001	1	*MH Equipment List*
Architectural Room Finish Schedule Drawings		
24590-HLW-A5-A19T-05200001	5	*HLW Vitrification Building Architectural Room Finish Schedule EL (-)21'-0"*
24590-HLW-A5-A19T-05201001	3	*HLW Vitrification Building Architectural Room Finish Schedule EL 0'-0"*
24590-HLW-A5-A19T-05202001	1	*HLW Vitrification Building Architectural Room Finish Schedule EL 14'-0"*
Other		
24590-HLW-3ZD-HRH-00001	0	*HLW Canister Receipt Handling (HRH) System Design Description*
24590-HLW-3ZD-RLD-00001	A	*HLW Radioactive Liquid Waste Disposal System Design Description*
24590-HLW-ADR-M-02-002	5	*HLW System HDH/HEH Multidiscipline Design Review*
24590-HLW-ADR-M-02-005	1	*HLW Canister Rinse Bogie Services Design Evaluation*

Document Number	Rev	Title
24590-HLW-ADR-M-02-007	1	*Rinse Bogie Energy Chain*
24590-HLW-N1D-HDH-00003	8	*HDH-VSL-00002 & HDH-VSL-00004 (HLW) - Corrosion Evaluation Data Sheet*
24590-HLW-N1D-HDH-00005	4	*HDH-VSL-00003 (HLW) - HLW Waste Neutralization Vessel*
24590-HLW-N1D-HDH-00007	4	*HDH-VSL-00001 (HLW) - Rinse Tunnel Canister Rinse Vessel*
24590-HLW-N1D-HDH-00009	1	*HDH-TK-00002 (HLW) - Cerium IV Addition Tank*
24590-HLW-P3-HDH-PA00004001	001	*HDH-PA-00004-S11F-6 - HLW VITRIFICATION BUILDING ISOMETRIC*
24590-HLW-RPT-RT-08-001-05	0	*Canister Description for Immobilized High Level Waste Product Qualification*
24590-HLW-TB-ENG-14-0001	0	*Engineering Design Decision for HLW HDH*
24590-HLW-U0D-W16T-00001	1	*HLW Room Environment Data Sheet*
24590-HLW-U1-60-00001	0	*HLW VITRIFICATION BUILDING FIRE BARRIER DRAWING PLAN AT EL -21'-0"*
24590-HLW-U1-60-00002	0	*HLW VITRIFICATION BUILDING FIRE BARRIER DRAWING PLAN AT EL 0'-0"*
24590-HLW-U1-60-00003	0	*HLW VITRIFICATION BUILDING FIRE BARRIER DRAWING PLAN AT EL 14'-0"*
24590-HLW-U1-60-00004	1	*HLW VITRIFICATION BUILDING FIRE BARRIER DRAWING PLAN AT EL 37'-0"*
24590-HLW-U1-60-00005	0	*HLW VITRIFICATION BUILDING FIRE BARRIER DRAWING PLAN AT EL 58'-0"*
24590-HLW-U1-60-00006	0	*HLW VITRIFICATION BUILDING FIRE BARRIER DRAWING PLAN AT EL 72'-0"*
24590-QL-HC4-W000-00067-02-00001	0B	*Calculation – Hanford WTP Hydrogen Bubble in Full Pipe*
24590-QL-HC4-W000-00067-02-00020	0C	*Calculation – DDT Near Closed End Parametric Analysis*
24590-WTP-3DP-G04B-00046	31	*Engineering Drawings*
24590-WTP-M4C-V11T-00024	6	*WTP Process Flowsheet Mass & Energy Balance Analysis for Input to Material Selection Assessments*
24590-WTP-SDDR-MS-12-00001	N/A	*CHANGE THE EQUIPMENT DESIGN PRESSURE (STEAM SIDE) ON HDH-SKID-00001 AND HDH-SKID-00002 FROM 150 PSIG TO 135 PSIG*

5.3 System Design Documents

Document Number	Title
Process Flow Diagrams	
24590-HLW-M5-V17T-00006	*Process Flow Diagram HLW Vitrification HLW Canister Decon (System HDH)*

Document Number	Title
Mechanical Sequence Diagrams	
24590-HLW-M1-HDH-00002	*Mechanical Sequence Diagram (MSD) for HLW Vitrification System HDH Canister Decontamination Handling*
P&IDs	
24590-HLW-M6-HDH-00001001	*P&ID - HLW HLW Canister Decontamination Handling System HDH-VSL-00002*
24590-HLW-M6-HDH-00001002	*P&ID - HLW HLW Canister Decontamination Handling System*
24590-HLW-M6-HDH-00002001	*P&ID - HLW HLW Canister Decontamination Handling System HDH-VSL-00003*
24590-HLW-M6-HDH-00002002	*P&ID - HLW HLW Canister Decontamination Handling System Transfer Ejectors*
24590-HLW-M6-HDH-00002003	*P&ID - HLW HLW Canister Decontamination Handling System HDH-TRLY-00003*
24590-HLW-M6-HDH-00003001	*P&ID - HLW HLW Canister Decontamination Handling System Steam Rack HDH-RK-00009*
24590-HLW-M6-HDH-00004001	*P&ID - HLW HLW Canister Decontamination Handling System HDH-HX-00001*
24590-HLW-M6-HDH-00004002	*P&ID - HLW HLW Canister Decontamination Handling System HDH-VSL-00007*
Mechanical Handling Diagrams	
24590-HLW-M7-HDH-00001001	*HLW Vitrification System HDH Mechanical Handling Diagram Canister Decontamination Handling System*
24590-HLW-M7-HDH-00001002	*HLW Vitrification System HDH Mechanical Handling Diagram Canister Decontamination Handling System*
24590-HLW-M7-HDH-00001003	*HLW Vitrification System HDH Mechanical Handling Diagram Canister Decontamination Handling System*
24590-HLW-M7-HDH-00001004	*HLW Vitrification System HDH Mechanical Handling Diagram Canister Decontamination Handling System*
24590-HLW-M7-HDH-00001005	*HLW Vitrification System HDH Mechanical Handling Diagram Canister Decontamination Handling System*
24590-HLW-M7-HDH-00001006	*HLW Vitrification System HDH Mechanical Handling Diagram Canister Decontamination Handling System*
General Arrangement/Equipment Location Drawings	
24590-HLW-P1-P01T-00001	*HLW Vitrification Building General Arrangement Plan At El -21'-0"*
24590-HLW-P1-P01T-00002	*HLW Vitrification Building General Arrangement Plan At El 0'-0"*
24590-HLW-P1-P01T-00003	*HLW Vitrification Building General Arrangement Plan At El 14'-0"*
24590-HLW-P1-P01T-00004	*HLW Vitrification Building General Arrangement Plan At El 37'-0"*
24590-HLW-P1-P01T-00005	*HLW Vitrification Building General Arrangement Plan At El 58'-0"*

Document Number	Title
24590-HLW-P1-P01T-00006	*HLW Vitrification Building General Arrangement Plan At El 72'-0"*
24590-HLW-P1-P01T-00009	*HLW Vitrification Building General Arrangement Sections D-D, E-E & F-F*
24590-HLW-P1-P01T-00010	*HLW Vitrification Building General Arrangement Sections G-G & H-H*
24590-HLW-P1-P23T-00016	*HLW Vitrification Building Equipment Location Plan EL. -21' -0" / Area 16*
24590-HLW-P1-P23T-00020	*HLW Vitrification Building Equipment Location Plan EL. -21' -0" / Area 20*
24590-HLW-P1-P23T-00021	*HLW Vitrification Building Equipment Location Plan EL. -21' -0" / Area 21*
24590-HLW-P1-P23T-00110	*HLW Vitrification Building Equipment Location Plan EL. 0' -0" / Area 110*
24590-HLW-P1-P23T-00115	*HLW Vitrification Building Equipment Location Plan EL. 0' -0" / Area 115*
24590-HLW-P1-P23T-00116	*HLW Vitrification Building Equipment Location Plan EL. 0 FT -0 IN / Area 116*
24590-HLW-P1-P23T-00120	*HLW Vitrification Building Equipment Location Plan EL. 0' -0" / Area 120*
24590-HLW-P1-P23T-00121	*HLW Vitrification Building Equipment Location Plan EL. 0' -0" / Area 121*
24590-HLW-P1-P23T-00210	*HLW Vitrification Building Equipment Location Plan EL. 14 FT -0 IN / Area 210*
24590-HLW-P1-P23T-00215	*HLW Vitrification Building Equipment Location Plan EL. 14 FT -0 IN / Area 215*
Fire Barrier Drawing Plan Drawings	
24590-HLW-U1-60-00001	*HLW Vitrification Building Fire Barrier Drawings Plan at EL -21'-0"*
24590-HLW-U1-60-00002	*HLW Vitrification Building Fire Barrier Drawings Plan at EL 0'-0"*
24590-HLW-U1-60-00003	*HLW Vitrification Building Fire Barrier Drawings Plan at EL 14'-0"*
24590-HLW-U1-60-00004	*HLW Vitrification Building Fire Barrier Drawings Plan at EL 37'-0"*
24590-HLW-U1-60-00005	*HLW Vitrification Building Fire Barrier Drawings Plan at EL 58'-0"*
24590-HLW-U1-60-00006	*HLW Vitrification Building Fire Barrier Drawings Plan at EL 72'-0"*
24590-HLW-U1-60-00007	*HLW Vitrification Building Fire Barrier Drawings Plan at EL 91'-0"*
Architectural Room Finish Schedule Drawings	
24590-HLW-A5-A19T-05200001	*HLW Vitrification Building Architectural Room Finish Schedule EL (-)21'-0"*
24590-HLW-A5-A19T-05201001	*HLW Vitrification Building Architectural Room Finish Schedule EL 0'-0"*

Document Number	Title
24590-HLW-A5-A19T-05202001	*HLW Vitrification Building Architectural Room Finish Schedule EL 14'-0"*

Appendix A Test Objectives, Conditions, and Acceptance Criteria

NOTE: Demonstrations and Tests identified in this appendix are preliminary, pending completion of design activities. They are established to document the flowdown of verification needs established in Section 3 but are not sufficiently detailed for development of specific system and equipment test plans. They may be used for general planning only. This note is to be removed when design is sufficiently progressed to provide the details needed to establish the basis for testing and acceptance criteria.

Requirement (para #)	Test (T) or Demo (D)	SU or COM	Plan (including SSCs)	Acceptance Criteria (TAC or GTC)*	Notes/Comments	Test Conditions
3.4.1.4	T	ENG	Perform testing on canister (or coupons of same material) to determine the effects of the decontamination variables (e.g., ceric nitrate concentration, time, and number of cycles) on the process.	**(GTC)** Testing is performed to document the effects of the decontamination process variables on the decontamination process.		
3.4.4.1	D	SU/COM	Demonstrate remotability in accordance with 24590-WTP-PL-RACT-RT-0001, *WTP Remotability Verification Plan*.	**(GTC)** Successful remote removal and re-installation of the all the HDH equipment/ components listed in the test plans.	Physical demonstration	Pre-Hot Operations
3.4.4.4	D	SU/COM	Demonstrate the operation of emergency stops for the listed equipment: • Rinse Bogie Maintenance Area Lower Crane – HDH-CRN-00002 • Rinse Bogie Maintenance Area Upper Crane – HDH-CRN-00004 • Canister Decontamination Crane – HDH-CRN-00005 • Decontamination Cave Crane Maintenance Area West Jib Crane – HDH-CRN-00006 • Decontamination Cave Crane Maintenance Area East Jib Crane – HDH-CRN-00007 • Swabbing Robot – HDH-MANIP-00001	**(GTC)** The listed equipments emergency stops successfully stop the equipment from operating.		
3.4.4.5	D	SU/COM	Demonstrate emergency stop reporting and reset functions. Crane CTNs: HDH-CRN-00002, -00004, -00006, -00007 Swabbing Robot CTN: HDH-MANIP-00001	**(GTC)** Successful reporting of the emergency stop buttons.		

Requirement (para #)	Test (T) or Demo (D)	SU or COM	Plan (including SSCs)	Acceptance Criteria (TAC or GTC)*	Notes/Comments	Test Conditions
3.4.4.6	D	SU/COM	Demonstrate the remote canister transfers listed below prior to hot commissioning: • Receive canister from HPH system • Transfer canister rinse vessel with canister from below the canister handling cave export hatch to the canister rinse station • Transfer canister rinse vessel with canister from rinse station to below the decontamination cave import hatch • Transfer canister from canister rinse vessel into a decontamination vessel • Transfer canister from decontamination vessel to visual inspection station • Transfer canister from visual inspection station to swabbing turntable • Transfer canister from swabbing turntable to decontamination cave export hatch and into transfer tunnel bogie • Transfer canister on canister transfer tunnel bogie from below decontamination cave export hatch to below the canister storage cave import hatch • Transfer canister from visual inspection station to above decontamination cave import hatch • Lower canister through decontamination cave import hatch and into canister rinse vessel • Transfer canister rinse vessel with canister from below decontamination cave import hatch to below the canister handling cave export hatch • Transfer canister from swabbing turntable into the decontamination vessels Crane CTN: HDH-CRN-00005 Bogie CTNs: HDH-TRLY-00003 , -00004 Grapple CTNs: HDH-TOOL-00001, -00004 Hatch CTNs: HDH-HTCH-00002, -00003, -00004 Vessel CTNs: HDH-VSL-00001, -00002, -00004 Turntable CTN: HDH-TTBL-00001 Window CTN: 30-SWIN-00030, -00031, -00032 CCTV Camera CTNs: PTJ-XT-3014, -3015, -3016, -3021	**(GTC)** The HDH mechanical handling equipment remotely performs the canister transfers without failure or dropping a canister.	These demonstrations are WAI.	A test canister weighing ≥ the maximum weight canister, to be used during demonstration of canister transfer capabilities.
3.5.2.6	D	SU/COM	Demonstrate the capability to disconnect the canister rinse vessels service hoses in the canister rinse tunnel before transfer of the bogie into the maintenance area. Bogie CTN: HDH-TRLY-00003 Vessel CTN: HDH-VSL-00001	**(GTC)** The service hoses are capable of being disconnected in the canister rinse tunnel before transfer into the maintenance area.		

Requirement (para #)	Test (T) or Demo (D)	SU or COM	Plan (including SSCs)	Acceptance Criteria (TAC or GTC)*	Notes/Comments	Test Conditions
3.5.2.7	D	SU/COM	Demonstrate the capability to disconnect the canister rinse bogies power supply in the canister rinse tunnel and connect a power supply from the maintenance area to transfer the bogie into the maintenance area. Bogie CTN: HDH-TRLY-00003 Vessel CTN: HDH-VSL-00001	**(GTC)** The power supply for the canister rinse bogie can be disconnected in the canister rinse tunnel and a power supply from the maintenance area can be connected to successfully transfer the bogie into the maintenance area.		
3.5.2.8	D	SU/COM	Demonstrate the capability to install the stainless steel lid in the maintenance area. Bogie CTN: HDH-TRLY-00003 Vessel CTN: HDH-VSL-00001 Crane CTN: HDH-CRN-00004	**(GTC)** The stainless steel lid can be successfully installed on the canister rinse vessel inside the maintenance area.		
3.5.3.2	D	SU/COM	Perform a system test to confirm the decontamination steam ejectors have the ability to receive steam from HPS and transfer effluent from the decontamination vessels to the neutralization vessel and from the neutralization vessel to the RLD system. Vessel CTNs: HDH-VSL-00002, -00003, -00004 Steam ejector CTNs: HDH-EJCTR-00002A/B, -00003A/B, -00056A/B, -00057 Stem supply valves for steam ejectors CTNs: YV-0172, YV-0173, YV-0174, YV-0175, YV-0176, YV-0272, YV-0273	**(GTC)** The HDH steam ejectors are capable of receiving steam from HPS to sufficiently transfer vessel contents.	This may be performed concurrent with the verification of requirement(s) in Section 3.5.3.4.	See requirement(s) in Section 3.5.3.4.

Requirement (para #)	Test (T) or Demo (D)	SU or COM	Plan (including SSCs)	Acceptance Criteria (TAC or GTC)*	Notes/Comments	Test Conditions
				(GTC) The interfacing systems provide the proper quantities of ceric nitrate, nitric acid, and sparge air to the decontamination vessels. **(GTC)** The HDH decontamination vessel contents are heated to the required temperature using the HDH heat exchangers.		
3.5.3.4	D	SU/COM	Demonstrate the decontamination process during commissioning and hot commissioning. Vessel CTNs: HDH-VSL-00002, -00004 Pump CTNs: HDH-PMP-00026, -00027 Heat exchanger CTNs: HDH-HX-00001, -00002 Control valves CTNs: YV-0416, YV-0418, YV-0516, YV-0518 Supply (heating and cooling) flow indicator CTNs: FI-0412, FI-0512 PCW system supply valve CTNs: YV-0417, YV-0517 Hot water supply temperature indicators CTNs: TI-0413, TI-0513 Vessel temperature indicator CTNs: TI-0119, TI-0146, TI-0219, TI-0246	**(GTC)** After decontamination, PCW supplies cooling water at the required temperatures and flow rates to cool the vessel contents to the required temperature. **(GTC)** The interfacing systems provide the proper quantities of hydrogen peroxide, sodium hydroxide, and sparge air to the neutralization vessel. **(GTC)** During hot commissioning, repeat the decontamination process demonstration to verify removable contamination on the surface of the canister does not exceed 3,670 Bq/m^2 for alpha and 36,700 Bq/m^2 for beta-gamma.	This demonstration is WAI. This may be performed concurrent with the verification of requirement(s) in Sections 3.5.3.2, and 3.9.1.2.	All normal operations and systems operating

Requirement (para #)	Test (T) or Demo (D)	SU or COM	Plan (including SSCs)	Acceptance Criteria (TAC or GTC)*	Notes/Comments	Test Conditions
3.5.3.9	T	SU/COM	Perform functional test to verify the PCW provides cooling water supply to the HDH decontamination vessels at the required temperatures and flow rates. PCW System Supply Valve CTNs: YV-0417, YV-0517 PCW System Supply Meter CTNs: FT-0412, FT-0512	**(GTC)** HDH vessels receive cooling water at required temperatures and flow rates.		PCW operating
3.5.4.1	D	SU/COM	Demonstrate the HDH vessels have the capability to wash the vessel walls and internals. Vessel CTNs: HDH-VSL-00001, -00002, -00003, -00004 Supply Valve CTNs:YV-0178, YV-0110, YV-0180, YV-0159, YV-0160, YV-0131,YV-0216	**(GTC)** The HDH vessels have the capability to wash the vessel walls and internals.	The transfer of wash water is demonstrated in the verification of requirements 3.5.3.2.	PWD operating DIW operating
3.5.4.2	D	SU/COM	Demonstrate the decontamination vessels capability to spray the IHLW canisters with nitric acid and DIW. Vessel CTNs: HDH-VSL-00002, -00004 Valve CTNs: YV-0178, YV-0110, YV-0116, YV-0216	**(GTC)** The decontamination vessels have the capability to spray the IHLW canisters with nitric acid and DIW.		
3.5.4.4	D	SU/COM	Demonstrate recovery of the canister rinse bogie and canister transfer bogie. Bogie CTNs: HDH-TRLY-00003, -00004 Recovery Device CTNs: HDH-RCVY-00007, -00009	**(GTC)** The recovery devices successfully recover the canister rinse bogie and canister transfer bogie.		Power supply to bogies disconnected
3.6.2.2	D	SU/COM	Demonstrate the capability to use air to purge steam lines for the HDH steam ejectors.	**(GTC)** Air is successfully used to purge the steam lines for the HDH steam ejectors.		
3.6.2.3	D	SU/COM	Demonstrate the HDH vessel heating/cooling system maintains higher fluid static pressure in the vessel heating/cooling coils relative to the vessel contents. Vessel CTNs: HDH-VSL-00002, -00004	**(GTC)** The fluid static pressure in the vessel heating/cooling coils is greater than that of the vessel contents.		
3.6.3.1	D	SU/COM	Perform system test to confirm line flushing velocity is acceptable for the following lines: • Wastewater transfer piping from canister rinse vessel to neutralization vessel • Wastewater transfer piping from both decontamination vessels to neutralization vessel • Wastewater transfer piping from neutralization vessel to the RLD System	**(GTC)** The flushing velocity for the listed lines is in the required range.		PCJ operating and monitoring flow meters

Requirement (para #)	Test (T) or Demo (D)	SU or COM	Plan (including SSCs)	Acceptance Criteria (TAC or GTC)*	Notes/Comments	Test Conditions
3.6.4.2	T	SU/COM	Perform system test to confirm the HDH system has the capability to heat and pump water at the required temperatures and flow rates. Vessel CTNs: HDH-VSL-00002, -00004 Pump CTNs: HDH-PMP-00026, -00027 Heat exchanger CTNs: HDH-HX-00001, -00002 Control valves CTNs: YV-0416, YV-0418, YV-0516, YV-0518 Supply indicator CTNs: FI-0412 , FI-0512 Hot water supply temperature indicator CTNs: TI-0413, TI-0513 Vessel temperature indicators CTNs: TI-0119, TI-0146, TI-0219, TI-0246	**(GTC)** System demonstrates capability to heat and pump water at the required temperatures and flow rates.		Decontamination simulant and test canister in decontamination vessel beginning at standard temperature
3.6.4.3	T/D	SUP & SU/COM	(SUP) Test fabricated valves to verify their closure rate meets the specified performance criteria for preventing water hammer. (SU/COM) Demonstrate automatic valve closure devices do not produce water hammer in the installed valves.	**(GTC)** The valves closure rate meets the performance criteria. Performed by supplier. **(GTC)** The installed valves closure rate does not produce water hammer. Performed on installed valves.	This testing/demonstration is to be performed by the supplier and by SU/COM after field installation.	All normal operating conditions
3.7.1.4	D	SU/COM	Demonstrate crane recovery in accordance with 24590-WTP-PL-RACT-RT-0001, WTP Remotability Verification Plan. CTN: HDH-CRN-00005	**(GTC)** The decontamination crane is successfully recovered to a maintenance area.		Crane power supply disconnected
3.7.4.1	D	SU/COM	Demonstrate the brakes on crane hoists and drive functions automatically set when the power is off. Crane CTN: HDH-CRN-00002, -00004, -00005, -00006, -00007	**(GTC)** The brakes on crane hoists and drive functions automatically set when the power is off.		
3.7.4.2	T	SU/COM	Measure illumination levels below the decontamination crane to verify lighting complies with IESNA Standard RP-7.	**(GTC)** The lighting below the decontamination crane complies with IESNA Standard RP-7.		
3.8.1.3	D	SU/COM	Demonstrate compatibility between the canister grapple lifting bail and the canister decontamination cave crane lifting hook. Grapple CTN: HDH-TOOL-00001, -00004 Crane CTN: HDH-CRN-00005	**(GTC)** The canister grapple lifting bail is compatible with the canister decontamination cave crane lifting hook.		

Requirement (para #)	Test (T) or Demo (D)	SU or COM	Plan (including SSCs)	Acceptance Criteria (TAC or GTC)*	Notes/Comments	Test Conditions
3.8.4.1	D	SU/COM	Demonstrate an in-cave HDH MSM has the capability of disengaging the grapple from a canister. MSM CTN: HDH-MANIP-00002, -00003 Grapple CTN: HDH-TOOL-00001, -00004 Shield Window CTN: SWIN-000031 Crane CTN: HDH-CRN-00005	**(GTC)** An in-cave MSM is capable of disengaging a grapple from the canister.		
3.9.1.1	D	SU/COM	Demonstrate the posting port has the capability to import and export swabs. CTN: HDH-TWDVC-00002	**(GTC)** The posting port demonstrates the capability to import and export swabs to the swabbing manipulator.		

Requirement (para #)	Test (T) or Demo (D)	SU or COM	Plan (including SSCs)	Acceptance Criteria (TAC or GTC)*	Notes/Comments	Test Conditions
3.9.1.2	D	SU/COM	Demonstrate the swabbing systems capability to wipe the proper locations, minimum area, and capability for an operator to visually verify swabbing locations prior to hot commissioning and during hot commissioning. Turntable CTN: HDH-TTBL-00001 CCTV camera CTNs: PTJ-XT-3015 Window CTNs: 30-SWIN-00032 Load cell CTN: HDH-WE-4413 Load cell panel CTN: HDH-PNL-00014 Posting port CTN: HDH-TWDVC-00002 Guide CTN: HDH-MHAN-00003 Loader CTN: HDH-MANIP-00001	**(GTC)** Demonstrate the swabbing manipulator can retrieve and return swabs to the posting port. **(GTC)** Demonstrate and verify the swab/monitoring system can swab the bottom, top, and sides of the canister. **(GTC)** Verify that swabbed surfaces of the canister cover a minimum of 300 cm^2. **(GTC)** Verify the swab maintains constant pressure < 5 lb at swabbing load cell. **(GTC)** Demonstrate that reading of the canister identification numbers can be performed at the canister swabbing turntable using a camera or shield window. **(GTC)** During hot commissioning, repeat the demonstration to confirm removable contamination on the surface of the canister to not exceed 3,670 Bq/m^2 for alpha and 36,700 Bq/m^2 for beta-gamma.	This demonstration is WAI. This may be performed concurrent with the verification of requirement(s) in Section 3.5.3.4	All normal operations and systems operating

Requirement (para #)	Test (T) or Demo (D)	SU or COM	Plan (including SSCs)	Acceptance Criteria (TAC or GTC)*	Notes/Comments	Test Conditions
3.9.1.3	D	SU/COM	Demonstrate the swabbing process' capability to monitor swabbing pressure and for an operator to verify swabbing pressure during commissioning and hot commissioning. Turntable CTN: HDH-TTBL-00001 CCTV camera CTNs: PTJ-XT-3015 Window CTNs: 30-SWIN-00032 Load cell CTN: HDH-WE-4413 Load cell panel CTN: HDH-PNL-00014 Guide CTN: HDH-MHAN-00003 Loader CTN: HDH-MANIP-00001	**(GTC)** The swabbing process demonstrates the capability to monitor swabbing pressure and for an operator to verify swabbing pressure during commissioning. **(GTC)** The swabbing process demonstrates the capability to monitor swabbing pressure and for an operator to verify swabbing pressure during hot commissioning.	It is recommended to include demonstration for pre-hot commissioning in factory acceptance tests.	All normal operations and systems operating
3.9.1.4	D	SU/COM	Demonstrate the ability to import and use portable instruments within the glovebox including the ability to measure contamination levels on swabs. Glovebox CTN: HDH-MHAN-00001	**(GTC)** The glovebox has the ability to import and use portable instruments within the glovebox including the ability to measure contamination levels on swabs.	Measurement is performed in the glovebox	All normal operations and systems operating
3.9.4.1	D	SU/COM	Demonstrate the capability to perform visual inspections for adhered glass and read the canister identification number on the IHLW canisters. CCTV camera CTN: PTJ-XT-3015 Window CTN: 30-SWIN-00032	**(GTC)** The canister is successfully visually inspected for glass deposits through use of cameras or shield windows for direct inspection. **(GTC)** The canister identification number can be read during visual inspection.	This demonstration is WAI.	
3.9.4.2	T	SU/COM	Test that, in conjunction with normal operation of the facility ventilation systems, the HDH glovebox can maintain a negative pressure relative to the room it resides in. Glovebox CTN: HDH-MHAN-00001	**(GTC)** The glovebox is able to maintain a negative pressure relative to the room it resides in.		After final air balance

Requirement (para #)	Test (T) or Demo (D)	SU or COM	Plan (including SSCs)	Acceptance Criteria (TAC or GTC)*	Notes/Comments	Test Conditions
3.10.2.4	T	SU/COM	Test SPAD installation for full sealing around the aperture perimeter. SPAD CTNs: HDH-DOOR-00003, -00004, -00005, -00006	**(GTC)** The SPADs fully seal around the aperture perimeter.		
3.10.4.2	D	SU/COM	Demonstrate the capability to open and close the HDH hatches and vessel lids without the equipment's respective motor, in accordance with 24590-WTP-PL-RACT-RT-0001, *WTP Remotability Verification Plan.* Shield hatch CTNs: HDH-HTCH-00002, -00003, -00004 Vessel (lids) CTNs: HDH-VSL-00002 , -00004 MSM CTNs: HDH-MANIP-00002, -00003	**(GTC)** Successful manual opening and closing of the shield hatches and decontamination vessel lids without use of the equipment's respective motor.		
3.10.4.3	D	SU/COM	Demonstrate shield door recovery in accordance with 24590-WTP-PL-RACT-RT-0001, *WTP Remotability Verification Plan.* Shield door CTNs: HDH-DOOR-00001, -00002 Recovery device CTN: HSH-RCVY-00006	**(GTC)** Successful closing of shield doors using recovery devices.		Power supply to the shield doors disconnected
3.10.4.6	D	SUP/SU/COM	Demonstrate the maintenance area shield doors fail in place. Shield door CTNs: HDH-DOOR-00001, -00002	**(GTC)** Demonstrate that the shield doors fail in place upon loss of power.	Ensure measures are provided to protect the shield door from damage during the demonstration.	
3.11.2.1	D	SU/COM	Demonstrate the operability of the Safety Significant swabbing and monitoring posting port door-to-door interlock. CTNs: HDH-TWDVC-00002	**(TAC)** Demonstrate the safety shield door interlock prevents posting port in-cave and out-cave shield doors being in the open position at the same time.		
3.11.2.2	D	SU/COM	Demonstrate the operability of the non-safety swabbing and monitoring posting port gamma monitor interlock. CTNs: HDH-TWDVC-00002 Gamma monitor CTNs: HDH-RS-4224, -4225	**(GTC)** Demonstrate the gamma interlock prevents posting port out cave shield door from opening if the gamma monitor detects a high radiation source.	The setpoint is to be determined by radiation engineering.	
3.11.4.3.1	D	SU/COM	Demonstrate the operability of the listed interlocks that prevent the following doors or hatches from being open simultaneously: • Canister handling cave export hatch, canister decontamination cave import hatch, and the canister rinse bogie maintenance shield door • Canister decontamination cave import hatch, canister decontamination cave export hatch, and the decontamination cave crane maintenance area shield door • Canister decontamination cave export hatch and the canister storage cave import hatch	**(GTC)** The listed interlocks are operable.		

Requirement (para #)	Test (T) or Demo (D)	SU or COM	Plan (including SSCs)	Acceptance Criteria (TAC or GTC)*	Notes/Comments	Test Conditions
3.11.4.3.2	D	SU/COM	Demonstrate the operability of the following interlocks that prevent damage to the HDH equipment: • Prevent decontamination crane movement into and out of the maintenance area if the hook is not raised and the maintenance door is open • Prevent canister rinse bogie movement into and out of the maintenance area if the maintenance door is not open	**(GTC)** The listed interlocks are operable.		
3.11.4.3.3	D	SU/COM	Demonstrate the following interlocks for bogie movements and canister transfers: • Prevent canister rinse bogie movement unless the canister handling cave export hatch, decontamination cave import hatch, and canister rinse bogie maintenance shield door are closed (not to include canister rinse bogie movement into maintenance area) • Prevent canister transfer bogie movement unless the canister decontamination cave export hatch and canister storage cave import hatch are closed	**(GTC)** The listed interlocks are operable.		
3.11.4.3.4	D	SU/COM	Demonstrate the listed hatches do not open unless a bogie is beneath the hatch: • Canister handling cave export hatch • Canister decontamination cave import hatch • Canister decontamination cave export hatch	**(GTC)** The listed interlocks are operable.		
3.11.4.3.5	D	SU/COM	Demonstrate an interlock prevents the canister rinse bogie recovery device from moving the canister rinse bogie past the decontamination cave import hatch with a canister. Recovery Device CTN: HDH-RCVY-00009 Bogie CTN: HDH-TRLY-00003 Hatch CTN: HDH-HTCH-00004	**(GTC)** An interlock prevents the canister rinse bogie recovery device from moving the canister rinse bogie past the decontamination cave import hatch with a canister.		
3.11.4.3.6	D	SU/COM	An interlock shall be provided to prevent the canister transfer tunnel bogie recovery device from moving the canister transfer tunnel bogie past the canister storage cave import hatch with a canister. Recovery Device CTN: HDH-RCVY-00007 Bogie CTN: HDH-TRLY-00004 Hatch CTN: HEH-HTCH-00004	**(GTC)** An interlock prevents the canister transfer tunnel bogie recovery device from moving the canister transfer tunnel bogie past the canister storage cave import hatch with a canister.		
3.11.4.3.7	D	SU/COM	Demonstrate the following interlocks: • Prevent the canister rinse bogie maintenance shield door from opening when a canister is present in the canister rinse vessel • Prevent canister rinse bogie movement from entrance of maintenance area when the maintenance area lid is not installed and when the canister rinse bogie maintenance door is open	**(GTC)** The listed interlocks are operable.		

Requirement (para #)	Test (T) or Demo (D)	SU or COM	Plan (including SSCs)	Acceptance Criteria (TAC or GTC)*	Notes/Comments	Test Conditions
3.11.4.3.8	D	SU/COM	Demonstrate the operability of local/maintenance mode features and functions during operation from the local control panels. Shield door CTNs: HDH-DOOR-00001, -00002 Shield hatch CTNs: HDH-HTCH-00002, -00003, -00004 Decontamination crane CTN: HDH-CRN-00005 Decontamination crane recovery device CTN: HDH-RCVY-00004 Bogie CTNs: HDH-TRLY-00003, -00004 Bogie recovery device CTNs: HDH-RCVY-00007, -00009 Decontamination vessel lid drive CTNs: HDH-DRIV-00001, -00008 Swabbing manipulator CTN: HDH-MANIP-00001 Swabbing manipulator elevator drive CTN: HDH-DRIV-00007 Swabbing turntable drive CTN: HDH-DRIV-00004	**(GTC)** The equipment successfully demonstrates the local/maintenance mode features and functions during operation from the local control panels.		
3.11.4.3.9	D	SU/COM	Demonstrate the operability of the independent protection interlocks during operation from the local control panel. Maintenance Cranes CTN: HDH-CRN-00002, -00004, -00006, -00007 Posting Port CTN: HDH-TWDVC-00002 Glovebox CTN: HDH-MHAN-00001	**(GTC)** The local control interlocks successfully operate.		
3.12.1.2	D	SU/COM	Demonstrate canister recovery in accordance with 24590-WTP-PL-RACT-RT-0001, *WTP Remotability Verification Plan*.	**(GTC)** The system remotely recovers a dropped canister.		

* Test acceptance criteria (TAC) are based on requirements from authorization basis documents. General test criteria (GTC) are requirements from other sources.

Appendix B Descriptions of System Functional Flow and Interactions

Function: A.1	Receive Filled/Lidded IHLW Canister from HPH System
Detailed description: The canister rinse bogie vessel is positioned underneath the canister handling cave export hatch. The hatch is opened and a canister handling crane lowers the canister through the hatch and into the canister rinse vessel. The canister handling crane detaches and raises the grapple. The canister handling cave export hatch is closed and the canister rinse bogie is transferred to the rinse station.	
Initiation: This function initiates once a canister is ready for transfer from the HPH system.	
Termination: This function terminates once the canister rinse bogie is in position at the rinse station.	
Parallel or sequential functions: None.	
Applicable Modes: Normal operations.	

Function: A.2	Rinse Canister (HDH-VSL-00001)
Detailed description: With the canister rinse vessel in position at the canister rinse station, the inflatable lid seal is inflated for rinsing. The rinse cycle sprays 360 gal of wash water on the canister and upon completion, the seal is deflated. The rinse water is removed from the vessel during rinsing (Function B.1). A 30 min delay allows the canister to dry.	
Initiation: This function initiates once the canister rinse vessel is at the rinse station.	
Termination: This function terminates after the 30 min delay for canister drying.	
Parallel or sequential functions: Effluent transfer to neutralization vessel.	
Applicable Modes: Normal operations.	

Function: A.3	Transport Canister to HDH-HTCH-00004
Detailed description: The canister rinse bogie vessel is moved to below HDH-HTCH-00004. The decontamination crane is moved from the park position, engages the raise canister rinse vessel grapple and is moved above HDH-HTCH-00004. HDH-HTCH-00004 is opened and the decontamination crane lowers and attaches the grapple to the canister. The canister is raised to transfer height inside the decontamination cave and HDH-HTCH-00004 is closed.	
Initiation: This function initiates upon completion of the 30 min drying time at the canister rinse station.	
Termination: This function terminates when HDH-HTCH-00004 is closed.	
Parallel or sequential functions: None.	
Applicable Modes: Normal operations.	

Function: A.4	Transfer Canister to Canister Decontamination Vessel
Detailed description: The canister rinse bogie vessel is moved to the park position underneath the canister handling cave export hatch. The decontamination crane moves the canister to a position above one of the decontamination vessels and the decontamination vessel lid is opened. The decontamination crane lowers the canister into the decontamination vessel. The grapple is released from the canister and the grapple is raised to transfer height. The decontamination vessel lid is closed.	
Initiation: This function initiates once HDH-HTCH-00004 is closed.	
Termination: This function terminates once the decontamination vessels lid is closed.	
Parallel or sequential functions: None.	
Applicable Modes: Normal operations.	

Function: A.5	Decontaminate/Etch/Rinse Canister (HDH-VSL-00002/00004)
Detailed description: Twenty gallons of ceric nitrate and 195 gal of nitric acid are added to the decontamination vessel concurrently. Sparge air is supplied to the decontamination vessels at 25 psig and 5 scfm whenever there are decontamination fluids in the vessel. The heat exchangers heat the decontamination fluids for 6 hr. After 6 hrs, the fluids are cooled (Function C.1). After the decontamination process, the top portion of the canister sprayed with a nitric acid spray. The decontamination crane returns the vessel canister grapple to the transfer grapple stand, attaches the swab and monitor canister grapple to the hoist, and moves above the decontamination vessel. The decontamination vessel lid is opened; the decontamination crane lowers the grapple into the vessel and attaches to the canister. The crane raises the canister until the grapple is just clear of the decontamination vessel. The nitric acid spray is initiated and the canister is raised through the spray until the underside of the canister is reached, which amounts to 201 gal of nitric acid sprayed. After the spray, the effluent is transferred to the neutralization vessel (Function B.2). The canister is lowered into the vessel; the grapple is disengaged and raised to transfer height. The decontamination vessel lid is closed and a water rinse is performed on the top section of the canister. The decontamination vessel lid is opened and the grapple is lowered and attached to the canister. A water spray is initiated and the canister is raised through the water spray until the underside of the canister is reached, which amounts to 201 gal of DIW sprayed. The effluent is transferred to the neutralization vessel (Function B.2). The canister is lowered into the decontamination vessel; the grapple is disengaged and raised to transfer height. The decontamination vessel lid is closed and the canister is allowed to dry.	
Initiation: This function initiates once the decontamination vessel lid is closed.	
Termination: The function terminates upon completion of the canister drying time.	
Parallel or sequential functions: Heating/cooling of vessel contents (Function C.1), transfer of effluent to neutralization vessel (Function B.2), spray of nitric acid, spray of DIW.	
Applicable Modes: Normal operations.	

Function: A.6	Transfer Canister to Visual Inspection Station
Detailed description: The decontamination vessel lid is opened and the swab and monitor canister grapple is lowered and attached to the canister. The canister is raised to transfer height and the decontamination vessel lid is closed. The canister is transferred above the swabbing turntable with the decontamination crane and is lowered to visual inspection height.	
Initiation: This function initiates upon completion of the canister dry time in the decontamination vessel.	
Termination: This function terminates once the canister is at visual inspection height.	
Parallel or sequential functions: None.	
Applicable Modes: Normal operations.	

Function: A.7	Visual Inspection of the Canister for Adhered Glass
Detailed description: The operator inspects the canister for adhered glass.	
Initiation: This function initiates once the canister is at visual inspection height.	
Termination: This function terminates once the operator is finished inspecting the canister for glass.	
Parallel or sequential functions: None.	
Applicable Modes: Normal operations.	

Function: A.8	Swab Bottom of Canister
Detailed description: An imported swab (Function E.1) is used to swab the bottom of the canister.	
Initiation: This function initiates after successful visual inspection.	
Termination: This function terminates once the swab is exported for contamination measurement.	
Parallel or sequential functions: None.	
Applicable Modes: Normal operations.	

Function: A.9	Transfer Canister to Turntable
Detailed description: The canister is lowered to the swabbing turntable. The grapple is disengaged from the canister and is raised to transfer height.	
Initiation: This function initiates after an acceptable measurement of contamination levels of the bottom of the canister is measured.	
Termination: This function terminates once the grapple is at transfer height.	
Parallel or sequential functions: None.	
Applicable Modes: Normal operations.	

Function: A.10	Swab Canister
Detailed description: The turntable rotation is initiated and the side of the canister is swabbed. The swab is exported (Function E.2) and contamination levels measured (Function E.3). Upon acceptable levels, a new swab is imported (Function E.1) and the canister top flange is swabbed. The swab is exported and the contamination levels are measured.	
Initiation: This function initiates once the grapple reaches transfer height.	
Termination: This function terminates once a failed contamination level is measured or after the top flange swab is exported.	
Parallel or sequential functions: Turntable rotation.	
Applicable Modes: Normal operations.	

Function: A.11	Measure Canister Dimensions
Detailed description: Upon measuring acceptable contamination levels, the canister dimensions will be measured using a telerobotic manipulator.	
Initiation: This function initiates after removable contamination levels are measured as acceptable.	
Termination: This function terminates upon completion of measuring canister dimensions.	
Parallel or sequential functions: None.	
Applicable Modes: Normal operations.	

Function: A.12	Measure Canister Weight
Detailed description: The grapple is lowered and attached to the canister. The canister is lifted and the weight is measured.	
Initiation: This function initiates upon completion of measuring canister dimensions.	
Termination: This function terminates after the canister weight is measured.	
Parallel or sequential functions: None.	
Applicable Modes: Normal operations.	

Function: A.13	Transport Canister to HDH-HTCH-00002
Detailed description: The canister is raised to transfer height and moved over the export hatch. The transfer tunnel bogie is moved under the decontamination cave export hatch and the hatch is opened.	
Initiation: This function initiates upon completion of weighing the canister.	
Termination: This function terminates once the decontamination cave export hatch is opened.	
Parallel or sequential functions: None.	
Applicable Modes: Normal operations.	

Function: A.14	Transfer Canister to Canister Transfer Tunnel Bogie
Detailed description: The decontamination crane lowers the canister through HDH-HTCH-00002 and into the transfer tunnel bogie. The swabbing and monitoring grapple is raised to transfer height and returned to the grapple stand. HDH-HTCH-00002 is closed.	
Initiation: This function initiates once the decontamination cave export hatch is opened.	
Termination: This function terminates once the decontamination cave export hatch is closed.	
Parallel or sequential functions: None.	
Applicable Modes: Normal operations.	

Function: A.15	Transport Canister to below HEH-HTCH-00004
Detailed description: The transfer tunnel bogie is transferred to below HEH-HTCH-00004. A canister export handling crane exports the canister to the HEH system. The transfer tunnel bogie is moved to below the decontamination export hatch.	
Initiation: This function initiates once the decontamination cave export hatch is closed.	
Termination: This function terminates once the transfer tunnel bogie is below the decontamination export hatch.	
Parallel or sequential functions: None.	
Applicable Modes: Normal operations.	

Function: B.1	Remove Solution from Canister Rinse Vessel
Detailed description: The canister rinse vessel solution is pumped to the neutralization vessel.	
Initiation: This function initiates once the level in the canister rinse vessel reaches 10 gal.	
Termination: This function terminates once the canister rinse vessel is empty.	
Parallel or sequential functions: None.	
Applicable Modes: Normal operations.	

Function: B.2	Remove Solution from the Decontamination Vessels
Detailed description: The HPS is supplied to the steam ejectors for the decontamination vessels. The effluent is transferred to the neutralization vessel. This transfer occurs after decontamination, after the nitric acid spray, and after the rinse water spray.	
Initiation: This function initiates once decontamination is complete, after the nitric acid spray, and after the rinse water spray.	
Termination: This function terminates when the decontamination vessel is empty.	
Parallel or sequential functions: Nitric acid spray, rinse water spray.	
Applicable Modes: Normal operations.	

Function: B.3	Hold/Neutralize Used Solution (HDH-VSL-00003)
Detailed description: The contents from the canister rinse vessel and the decontamination vessel are held in the neutralization vessel. Sparge air is supplied at 25 psig and 5 scfm for mixing. One-half gallon of hydrogen peroxide and 83 gal of sodium hydroxide are added with each canister decontamination effluent transfer to neutralize the solution. Plant wash water is supplied to the vessel for wash down capabilities.	
Initiation: This function initiates once effluent is transferred to the neutralization vessel.	
Termination: This function terminates when there is no effluent in the neutralization vessel.	
Parallel or sequential functions: Transfer of solution from the canister rinse vessel and decontamination vessels, sparge air supply, addition of sodium peroxide and hydrogen peroxide.	
Applicable Modes: Normal operations, D&D.	

Function: B.4	Remove Solution from Neutralization Vessel
Detailed description: The HPS is supplied to the steam ejectors for the neutralization vessel. The contents are transferred to the RLD system. The contents are transferred approximately every 24 hr, or after 2 canister decontamination wastewater transfers.	
Initiation: This function initiates once the vessel is full or after two canister decontamination transfers.	
Termination: This function terminates once the vessel is empty.	
Parallel or sequential functions: Sparge air.	
Applicable Modes: Normal operations.	

Function: C.1	Heat/Cool HDH-VSL-00002/00004 Contents
Detailed description: The HPS is supplied to a heat exchanger. Pumps circulate water between the heat exchanger and the decontamination vessel coils to heat the contents to 149 °F. After decontamination, the hot water supply is shut off and PCW supplies cooling water to the coils to cool the vessel contents to 104 °F.	
Initiation: This function initiates when the vessel is ready for decontamination and once the vessel is ready to be cooled.	
Termination: This function terminates when the vessel contents are at the proper temperature for heating or cooling.	
Parallel or sequential functions: Air sparge.	
Applicable Modes: Normal operations.	

Function: D.1	Demist
Detailed description: A demister is used to prevent excessive moisture and aerosols from being carried out of the decontamination vessel and into the PJV system.	
Initiation: This function initiates when vessel offgas is being transferred through the overflow piping.	
Termination: This function terminates when there is no offgas coming from the decontamination vessels.	
Parallel or sequential functions: Decontamination, transfer of solutions to neutralization vessel, sparge air, nitric acid rinse, water rinse.	
Applicable Modes: Normal operations.	

Function: E.1	Import Swab
Detailed description: A clean swab is imported through the posting port with a manipulator.	
Initiation: This function initiates when the system is ready to swab the canister.	
Termination: This function terminates once the swab is received by the manipulator.	
Parallel or sequential functions: None.	
Applicable Modes: Normal operations.	

Function: E.2	Export Swab
Detailed description: The swab is exported through the posting port. A gamma monitor interlock measures the radiation and prevents the out-cell shield door from opening if the radiation levels are above established setpoints. If the radiation levels are above the established setpoints the swab is transferred in-cave and placed in a waste basket with the swabbing manipulator and the canister is transferred into a decontamination vessel.	
Initiation: This function initiates once a swab is ready for export.	
Termination: This function terminates once the swab is in the glovebox.	
Parallel or sequential functions: None.	
Applicable Modes: Normal operations.	

Function: E.3	Measure Swab Contamination Level
Detailed description: Equipment in the glovebox will measure the contamination level of the swab. The swab is placed in a storage area inside the glovebox to await bag out.	
Initiation: This function initiates once the used swab is present in the glovebox.	
Termination: This function terminates upon completion of measuring contamination level.	
Parallel or sequential functions: None.	
Applicable Modes: Normal operations.	

Function: F.1	Transfer Canister to HPH for Glass Removal
Detailed description: The canister is raised to transfer height and transferred above HDH-HTCH-00004. The canister rinse bogie vessel is transferred below HDH-HTCH-00004 and the hatch is opened. The canister is lowered into the canister rinse vessel and the grapple is raised to transfer height. HDH-HTCH-00004 is closed. The canister rinse vessel transfers to below the canister handling cave export hatch. The canister is received for glass removal by the HPH system.	
Initiation: This function initiates upon failed visual inspection.	
Termination: This function terminates when HPH receives the canister.	
Parallel or sequential functions: None.	
Applicable Modes: Normal operations.	

Function: G.1	Transfer Canister to Decontamination Vessel
Detailed description: If the canister is on the swabbing turntable, the grapple is lowered and attached to the canister. The canister is raised to transfer height and transferred above one of the decontamination vessels. The decontamination vessel lid is opened and the canister is lowered into the decontamination vessel. The grapple is raised to transfer height and the decontamination vessel lid is closed. The decontamination vessel function begins (Function A.5).	
Initiation: This function initiates when a swabs contamination levels are measured above acceptable limits.	
Termination: This function terminates once the decontamination vessel lid is closed.	
Parallel or sequential functions: None.	
Applicable Modes: Normal operations.	

Function: H.1	Receive Electrical Power
Detailed description: Electrical power to the HDH equipment and instruments is supplied by the LVE. SC instrumentation and controls that require backup power are provided power by the UPE.	
Initiation: This function initiates when the HLW Facility is in startup operations.	
Termination: This function terminates when HLW glass production operations are complete.	
Parallel or sequential functions: All.	
Applicable Modes: All modes.	

Function: I.1	Facilitate Remote Viewing of Remote Operations via CCTV
Detailed description: Cameras are used to view remote HDH operations.	
Initiation: This function initiates at preparation for remote operations.	
Termination: This function terminates upon completion of remote operations.	
Parallel or sequential functions: All.	
Applicable Modes: All modes.	

Function: J.1	Support Monitoring, Control, and Communication
Detailed description: MHJ supports the monitoring and controls for all of the mechanical handling equipment in HDH. The MHJ controls the following: • Maintenance area shield doors • Hatches (via through wall drives) • Decontamination Crane • Bogies • Decontamination vessel lids (via through wall drives) • Swabbing turntable (via through wall drive) • Swabbing manipulator (via through wall drive) • Swabbing vertical elevator (via through wall drive) • Operation of recovery devices for canister rinse bogie, decontamination crane, and the canister transfer tunnel bogie • All canister transfers • All non-safety interlocks to support HVAC functionality, prevent damage to equipment, support canister transfers, and to supply defense in depth measure for contamination and radiation control	
Initiation: This function initiates at beginning of operation of mechanical handling equipment.	
Termination: This function terminates when operation of mechanical handling equipment ends.	
Parallel or sequential functions: All.	

Function: J.1	Support Monitoring, Control, and Communication
Applicable Modes: All modes.	

Function: K.1	Decontaminate Equipment in HDH Tunnels, Maintenance Areas, and Caves
Detailed description: The DIW and the CO_2 decontamination units are supplied in the HDH rooms for decontamination of equipment prior to entry to maintenance areas. The ISA is supplied to the CO_2 decontamination units. The wastewater is collected in the room sumps and transferred to the RLD system.	
Initiation: This function initiates when decontamination of equipment is required.	
Termination: This function terminates upon completion of decontamination.	
Parallel or sequential functions: None.	
Applicable Modes: Maintenance, D&D.	

Function: L.1	Uninterruptable Power to Posting Port Safety Significant Interlocks
Detailed description: Uninterruptable power is supplied to the HDH posting port interlocks.	
Initiation: This function initiates during HLW facility startup.	
Termination: This function terminates after HLW facility glass production terminates.	
Parallel or sequential functions: All.	
Applicable Modes: All.	

Function: M.1	Support Monitoring, Control, and Communication
Detailed description: Non-safety monitoring and control functions are controlled by the PCJ. The functions that are monitored and controlled by the PCJ: • Measure the temperature, pressure, and level of the decontamination vessels and neutralization vessel • Measure the level of the canister rinse vessel • Control and monitor the spray water flow rate in the canister rinse vessel • Control and monitor the inflatable seal pressure on the canister rinse vessel • Control and monitor the nitric acid spray flow rate to the decontamination vessels • Control and monitor the water spray flow rate to the decontamination vessels • Control and monitor the PCW/heating water flow rate through the decontamination vessel coils • Control the addition of ceric nitrate to the decontamination vessels • Control and monitor the addition of sodium hydroxide to the neutralization vessel • Control the addition of hydrogen peroxide to the neutralization vessel • Control and monitor the water spray flow rate to the neutralization vessel • Start and terminated transfer pumps • Control the steam supply and heat exchanger operation • Control and monitor sparger flow rate to the decontamination vessels and neutralization vessel • Operate the steam ejectors	
Initiation: This function initiates when the HLW Facility is in startup operations.	
Termination: This function terminates when HLW glass production operations are complete.	
Parallel or sequential functions: All.	
Applicable Modes: All modes.	

Function: N.1	Use Mechanical Handling Equipment to Perform Maintenance Operations
Detailed description: The mechanical handling equipment is used to perform maintenance operations. Cranes are used to	

remove hatches and the MSMs. Recovery devices are provided for the recovery of the canister rinse vessel, canister transfer tunnel bogie, and the decontamination crane to their respective maintenance areas. The canister rinse vessel utility hoses and power supply are disconnected prior to entry into the maintenance area and a separate power supply from the maintenance area is attached to the bogie to transfer the bogie into the maintenance area. A stainless steel lid is placed onto the vessel immediately after entering the maintenance area. Hatches and the decontamination vessel lids can be manually operated from outside the cell in the event of failure. Shield doors have recovery provisions to manually close the doors for maintenance on the out-cave motors and drives.
Initiation: This function initiates when the HLW Facility is in startup operations.
Termination: This function terminates when HLW glass production operations are complete.
Parallel or sequential functions: All.
Applicable Modes: All modes.

Function: O.1	Supply Air to Control Valves and Instruments
Detailed description: ISA provides air to the HDH control valves and instruments. Air is used to provide the motive force to open/operate control valves and instruments.	
Initiation: This function initiates when the PCJ system transmits a signal to open/operate the control valves or instruments.	
Termination: This function terminates when the PCJ system transmits a signal to terminate operation/close the control valves or instruments.	
Parallel or sequential functions: None.	
Applicable Modes: Normal operations.	

Function: P.1	Supply Fire Protection Water to the Glovebox
Detailed description: FPW supplies fire protection water to the glovebox.	
Initiation: This function initiates when the PCJ system transmits a signal to open/operate the FPW supply control valves.	
Termination: This function terminates when the PCJ system transmits a signal to terminate operation/close the FPW supply valves.	
Parallel or sequential functions: None.	
Applicable Modes: Fire.	

Appendix CActive Safety Instruments and Functions

The listed instruments are designated as having active safety functions. Information in the table below reflects the current design of active safety instruments, including functions, and safety designations per the P&IDs and associated equipment and instrument lists. In some cases the current safety classification of the SSCs in design is known to exceed the design requirements. The information will be updated as needed to reflect changes to the design. The information below is provided in support of Plant Engineering and Operations and does not represent design requirements. See also vendor drawing 24590-QL-POA-M000-00002-06-00028.

Function Title	Safety Designation	Sensors	Final Control Elements	Functional Description
Canister Swabbing & Monitoring Posting Port Door-to-Door Interlock	SS	HDH-YY-4221 HDH-ZS-4211 HDH-ZS-4212 HDH-ZS-4222 HDH-ZS-4223 HDH-ZS-4236 HDH-ZS-4237	TBD	If an attempt is made to open the out-cave doors while the incave doors are not closed, or the outcave doors are not closed and an attempt is made to open the incave doors, this interlock isolates power to both doors.

Appendix D
System Procedures

RESERVED

Appendix E
System History

RESERVED

Issued by
RPP-WTP PDC

HLW Filter Cave Handling (HFH) System Design Description

Document title:

Document number: 24590-HLW-3ZD-HFH-00001

Revision number: 0

Type:
☒ System Design Description
☐ Facility Design Description

Originator(s): Karl Esterly Brian Johnson

Checked by: Phil Townsend

Checker's signature: _____ 7-10-15
Signature Date

Concurrence: Mark Johnson

Concurrence signature: _____ 8/10/15
Sean Smith for M. Johnson
Manager of Production Engineering Signature Date

Concurrence: Ian Milgate

Concurrence signature: _____ 8/11/15
Project Technical Director and Design Authority Signature Date

Approved by: Natalie Harkey

Approver's position: Systems Engineering Manager

Approver's signature: _____ 8/12/2015
Systems Engineering Manager Signature Date

Validation – signatures below indicate acceptance of the requirements established in Section 3 as the complete and correct set of requirements for this system relative to the requirement sources for which the Requirement Developer is responsible.

Appl.	Requirement Area	Requirement Developer	Signature	Date
☒	Architectural Design	Joel Evans		3/10/15
☒	Civil/Structural Design	Joel Evans		3/10/15
☒	Controls & Instrumentation Design	WAYNE CHADERTON		3/12/15
☒	Commissioning	C.S. Winslow for David Painter	per email	3/9/15
☒	Electrical Design & AHJ	Gary E. Lucke		3/13/15
☐	Fire Protection Systems Design			
☒	Fire Protection Engineering	BEN JOHNSON		3/23/15
☒	HVAC Design ***	C.J. Winslow per Email David Carroll		3/12/15
☒	Mechanical Handling Design	JULIAN LEAM		03.11.15
☒	Mechanical Systems Design	JULIAN LEAM		03.11.15
☒	Plant Design	Travis Vincent		3/12/15
☐	Process Engineering			
☐	Interface (External)			
☐	Interface (Internal)			
☒	System Functions and Requirements	P. Townsend		7/10/15
☒	Equipment Environmental Qualification	G. RAJAGOPAL	G. Rajagopal	03-11-15
☒	Equipment Seismic Qualification	~~MIKE HASTAD~~		~~3/11/15~~ CW 3/23/15
☒	Materials Engineering / Technology	Grant Marr		3/17/15
☐	Plant Software Design			
☒	Reliability, Availability, Maintainability, Inspectability (Plant Engr)	M. Miller		3/11/15 CW 4/13/15 ~~3/5/16~~
☒	Environmental Permitting (ESH)	Bret Peck		3/18/15
☐	Fire Safety (ESH)	Roger J. Landon	Roger Landon	4/9/15
☒	Nuclear Safety Engineering	Chris Meng Scott Munh	C Meng	3/23/15 4/4/15
☐	Criticality Safety			
☒	Radiological Engineering	Kyle Peltier		~~4/7/15~~ 3-17-15
☒	Industrial Safety/Hygiene (ESH)	C.S. Winslow for ** Scott Nickerson Per Email	C. Winslow	3/18/15
☒	Mission (WTP Contract functional/performance rqmts)	C.S. Winslow for By email Brian Gifford	C. Winslow	3/10/15
☒	Operations, Maintenance, Human Factors	C.J. Winslow for, by Email Dan Roviro	C. Winslow	3/10/15
☒	Quality Assurance	V. Cleary-Wandt		3/10/15
☐	Safeguards & Security			
☐	Startup			
☐	Transportation & Logistics			

* Validation not required for alpha/preliminary criteria documents.

** C.S. Winslow for Dale Gergely per Email CWinslow 4/8/15

*** GERARD GARCIA Gerard Garcia 4/8/2015

History Sheet

Rev	Reason for revision	Revised by
0	Initial issue. Supersedes 24590-HLW-3YD-HFH-00001, rev. 5, *System Description for the HLW Filter Cave Handling System (HFH)*	K. Esterly

Contents

1 Introduction 1
1.1 System Identification 1
1.2 Limitations and Scope 1
1.3 Ownership and Maintenance 2
1.4 Definitions/Glossary 2
1.5 Acronyms and System Designators 3
1.5.1 Acronyms 3
1.5.2 System Designators 4
2 General Overview 5
2.1 System Functions/Safety Functions 8
2.2 System Classification 8
2.3 Basic Operational Overview 8
3 Design Requirements 16
3.1 Requirements 16
3.2 Bases 17
3.3 References 17
3.4 General Requirements 17
3.4.1 Mission and Functional / Performance Requirements (Including States/Modes) 17
3.4.2 Nuclear Safety, ALARA, Environmental and Other Regulatory Requirements 19
3.4.3 System Interface Requirements 24
3.4.4 Other Technical, Specialty, Operations and Maintenance Requirements 24
3.5 Crane Requirements 29
3.5.1 Mission and Functional / Performance Requirements (Including States/Modes) 29
3.5.2 Nuclear Safety, ALARA, Environmental and Other Regulatory Requirements 33
3.5.3 System Interface Requirements 34
3.5.4 Other Technical, Specialty, Operations, and Maintenance Requirements 34
3.6 Shield Door Requirements 37
3.6.1 Mission and Functional / Performance Requirements (Including States/Modes) 37
3.6.2 Nuclear Safety, ALARA, Environmental and Other Regulatory Requirements 38
3.6.3 System Interface Requirements 40
3.6.4 Other Technical, Specialty, Operations and Maintenance Requirements 40
3.7 Posting Port Requirements 42
3.7.1 Mission and Functional / Performance Requirements (Including States/Modes) 42
3.7.2 Nuclear Safety, ALARA, Environmental, and Other Regulatory Requirements 43
3.7.3 System Interface Requirements 43
3.7.4 Other Technical, Specialty, Operations and Maintenance Requirements 43
3.8 Master Slave Manipulator Requirements 46
3.8.1 Mission and Functional / Performance Requirements (Including States/Modes) 46
3.8.2 Nuclear Safety, ALARA, Environmental and Other Regulatory Requirements 46
3.8.3 System Interface Requirements 46
3.8.4 Other Technical, Specialty, Operations and Maintenance Requirements 46

3.9 Tool Requirements 47
3.9.1 Mission and Functional / Performance Requirements (Including States/Modes) 47
3.9.2 Nuclear Safety, ALARA, Environmental and Other Regulatory Requirements 50
3.9.3 System Interface Requirements 50
3.9.4 Other Technical, Specialty, Operations and Maintenance Requirements 50

3.10 Monitoring and Controls Requirements 51
3.10.1 Mission and Functional / Performance Requirements (Including States/Modes) 51
3.10.2 Nuclear Safety, ALARA, Environmental and Other Regulatory Requirements 57
3.10.3 System Interface Requirements 57
3.10.4 Other Technical, Specialty, Operations and Maintenance Requirements 57

3.11 Other Structures, Systems, and Components Requirements 57
3.11.1 Mission and Functional / Performance Requirements (Including States/Modes) 57
3.11.2 Nuclear Safety, ALARA, Environmental and Other Regulatory Requirements 57
3.11.3 System Interface Requirements 58
3.11.4 Other Technical, Specialty, Operations, and Maintenance Requirements 58

3.12 Relevant Codes and Standards 58
3.12.1 Codes of Record 58
3.12.2 WTP Design Criteria, Design Guides, and General Specifications 60

4 System Description 62

4.1 Configuration Information 62
4.1.1 Description of System, Subsystems, and Major Components 63
4.1.2 Boundaries and Interfaces 84
4.1.3 Physical Layout and Location 85
4.1.4 Principles of Operation 88
4.1.5 System Reliability Features 88
4.1.6 System Control Features 88

4.2 Operations 90
4.2.1 Initial Configuration (Pre-startup) 90
4.2.2 System Startup 90
4.2.3 Normal Operations 90
4.2.4 Off-Normal Operations 91
4.2.5 System Shutdown 91
4.2.6 Safety Management Programs and Administrative Controls 91

4.3 Testing and Maintenance 91
4.3.1 Temporary Configurations 91
4.3.2 TSR-Required Surveillances 91
4.3.3 Non-TSR Inspections and Testing 91
4.3.4 Maintenance 91

4.4 Supplemental Information 91

5 References and Design Documents List 91

5.1 Source / Basis References 91

5.2 Other References 92

5.3 System Design Documents 94

Appendices

Appendix A - Test Objectives, Conditions, and Acceptance Criteria A-1

Appendix B - Descriptions of System Functional Flow and Interactions B-1

Appendix C - Active Safety Instruments and Functions C-1
Appendix D - Reserved - System Procedures D-1
Appendix E - Reserved – System History E-1

Tables

Table 2-1 Functional Analysis and Crosswalk to Requirements 11
Table 3-1 High-Level Waste Filter Cave Handling System Safety Designations 19
Table 3-2 High-Level Waste Filter Cave Handling System Seismic Design Categories 21
Table 3-3 High-Level Waste Filter Cave Handling System Applicable Codes and Standards 58
Table 3-4 WTP Design Criteria, Design Guides, and General Specifications Applicable to HFH 60
Table 4-1 Plant Item List 63
Table 4-2 Packaged Equipment Local Controls 89

Figures

Figure 2-1 High-Level Waste Filter Cave Handling System Context Diagram 6
Figure 2-2 High-Level Waste Filter Cave Handling System Mechanical Handling Diagram 7
Figure 2-3 High-Level Waste Filter Cave Handling System Functional Block Diagram 9
Figure 4-1 Filter Cave Crane/Power Manipulator 65
Figure 4-2 Maintenance Crane 66
Figure 4-3 Posting Port and Glovebox 67
Figure 4-4 Tool Rack 68
Figure 4-5 Export Hatch 69
Figure 4-6 Vertical and Horizontal Shield Door 71
Figure 4-7 Horizontal Door Recovery Equipment 71
Figure 4-8 Three Inch Shielded Personnel Access Door 72
Figure 4-9 Filter Grapple 73
Figure 4-10 Master Slave Manipulator 75
Figure 4-11 Shield Window (Typical) 76
Figure 4-12 Filter Basket 77
Figure 4-13 Filter Import Rack 77
Figure 4-14 Power Manipulator Arm Change Fixture 78
Figure 4-15 Power Manipulator Wrist Stand 78
Figure 4-16 Power Manipulator Parallel Jaw Hand Change Fixture 79

Figure 4-17 Twelve Inch Impact Wrench 80
Figure 4-18 Portable Vacuum 81
Figure 4-19 Seat Cleaning Tool 82
Figure 4-20 Filter Cave Maintenance Area Workbench 83
Figure 4-21 General Filter Cave Configuration 87

1 Introduction

1.1 System Identification

This system design description (SDD) defines the technical, functional, and performance requirements of the high-level waste (HLW) filter cave handling system (HFH). This document details the waste treatment requirements, environmental compliance requirements, and authorization basis requirements of the HFH as they are currently known and understood. This SDD describes the process and functional design requirements of the HFH, including the following:

- Services and utility requirements, operating materials and supplies, and other external interfaces
- Operations limits and design bases
- Other criteria and requirements pertinent to HFH design

The HFH provides equipment to support remote change-out of the primary high-efficiency particulate air (HEPA) filters for the C5 ventilation system (C5V), and the primary and secondary HEPA filters for the HLW melter offgas treatment process system (HOP) and the pulse jet ventilation system (PJV). Additionally, the HFH provides equipment to support remote maintenance of the in-cave equipment and packaging waste for export. The boundaries, system interfaces, and HFH functional descriptions are provided in Section 2.

1.2 Limitations and Scope

The scope of this document is to provide an authoritative source for the collected set of requirements applicable to the HFH, inclusive of interface requirements with other systems. The SDD is prepared in accordance with 24590-WTP-3DP-G04B-00093, *System and Facility Design Descriptions*. The intended use of these collected requirements is to establish the following:

- Inform the HFH design effort
- Provide a validated basis upon which to confirm implementation of design requirements
- Provide the expected means of verification for requirements, including those that are post-construction (i.e., startup and commissioning test objectives and acceptance criteria)

All requirements established in this document are intended to be verified to be implemented in design and/or physical configuration using a graded approach commensurate with importance and risk.

Where numeric values are provided within requirements in Section 3, these values are provided without additional margin. For example, if a value is established in 24590-WTP-DB-ENG-01-001, *Basis of Design*, no attempt is made to remove any margin that may or may not have gone into the establishment of that value, nor has any margin been added. Where values are stated as minimums or maximums, there is no expectation that additional margin be applied in the verifications that the design requirements have been met. Testing required to be performed in accordance with external codes and standards must follow the rules established in those documents.

This document is intended to be used in support of design development, design verification, turnover, startup testing, and commissioning activities. This document will be maintained current relative to

changes in source requirements documents. Updates shall be made concurrent with these changes to source requirements, or implementation shall be tracked for completion in accordance with 24590-WTP-GPG-ENG-0170, *Impact Evaluation.*

Engineers are expected to be able to use the requirements in Section 3 of this document as input for design development without recourse to the upper-tier source documents or searches of the Design Criteria Database (Technical Requirements Management System). Design engineers are still required to ensure that requirements contained within the discipline and functional standards incorporated by reference in Section 3 are followed. These documents contain additional criteria that are based on applications of external codes, standards, corporate best practices, and engineering management expectations for a consistent approach to design.

Certain requirement statements in this document are preceded by a "**[HOLD]**" notation. This notation is used when there are unresolved technical issues, known inconsistencies among source requirements, or other management suspensions of work requiring resolution. Requirements with the "**[HOLD]**" notation may be used to proceed with preliminary or committed design (with inclusion of appropriate holds) but shall not be used in support of fabrication or construction until the "**[HOLD]**" is removed.

The contents of Section 4 are being developed in a phased approach in support of future operations and maintenance. At this revision, only the contents of Sections 4.1.1 through 4.1.4 and 4.1.6 have been updated and verified. Sections 4.1.5, 4.2, 4.3 and 4.4 are currently reserved and will be updated in a later phase after the work to support completion of these sections has been completed.

1.3 Ownership and Maintenance

The Design Authority (DA) organization is responsible for the preparation and maintenance of this document through turnover of the included systems to Operations. Thereafter, maintenance of this document is the responsibility of the Plant Engineering organization; however, the Engineering DA organization retains responsibility for the establishment and definition of design requirements.

1.4 Definitions/Glossary

Confinement – For consistency, regardless of usage elsewhere, confinement is used in this document to denote the controls used to prevent or minimize the release or migration of airborne contaminants, including aerosols, hazardous vapors, or gases.

Containment – For consistency, regardless of usage elsewhere, containment is used in this document to denote the controls used to prevent or minimize the release or migration of liquid or liquid-entrained contaminants.

Primary confinement / containment – The structures, systems, or components (SSCs) and their associated boundaries that confine or contain airborne and liquid contaminants under normal conditions.

Secondary confinement / containment – The structures or other design features that capture and prevent further spread or migration of airborne or liquid contaminants after they have escaped primary confinement or containment.

1.5 Acronyms and System Designators

1.5.1 Acronyms

A	analysis
ALARA	as low as reasonably achievable
ASCE	American Society of Civil Engineers
ASME	American Society of Mechanical Engineers
ASTM	American Society for Testing and Materials
APC	additional protection class
BOD	Basis of Design
CCTV	closed circuit television video
CMA	crane maintenance area
CMAA	Crane Manufacturer's Association of America
COM	commissioning
CON	construction
CTN	component tag number
D	demonstration
DA	Design Authority
DBE	design basis event
DOE	US Department of Energy
DSA	Documented safety analysis
DVR	design verification report
ENG	Engineering
EQP	equipment qualification package
FCR	facility control room
HEPA	high-efficiency particulate air
HLW	High-Level Waste (Facility)
HVAC	heating, ventilation, and air conditioning
I	inspection
LOI	local operator interface
MSD	mechanical sequence diagram
MSM	master slave manipulator
NFPA	National Fire Protection Association
ORD	Operations Requirements Document
OSHA	Occupational Safety and Health Administration
P&ID	piping and instrumentation diagram
PDSA	preliminary documented safety analysis
REC	receiving

ROIN	requirement object identification number
SC	safety class
SC-I	seismic category-I
SC-II	seismic category-II
SC-III	seismic category-III
SC-IV	seismic category-IV
SC-V	seismic category-V
SDD	system design description
SPAD	shielded personnel access door
SRD	Safety Requirements Document
SS	safety significant
SSC	structures, systems, or components
SSRS	Safety System Requirements Specification
SQR	supplier quality representative
SU	startup
SUB	subcontractor
SUP	supplier
T	test
TBD	to be determined
WTP	Hanford Tank Waste Treatment and Immobilization Plant

1.5.2 System Designators

C5V	C5 ventilation system
DIW	demineralized water (system)
FPW	fire protection water system
HFH	high-level waste filter cave handling system
HOP	high-level waste melter offgas processing system
HSH	high-level waste melter cave support handling system
ISA	instrument service air system
LTE	lighting electrical system
LVE	low voltage electrical (480/208/120 V) system
MHJ	mechanical handling control system
PJV	pulse jet ventilation system
PTJ	process and mechanical handling CCTV system
RLD	radioactive liquid waste disposal system
RWH	radioactive solid waste handling system
UPE	uninterruptible power electrical system

2 General Overview

The HLW filter cave (H-0104) is an enclosed, radiologically controlled area housing the primary HEPA filters for the C5V, and the primary and secondary HEPA filters for the PJV and the HOP. The filter cave is classified as a high radiation and high contamination (R5/C5) area. The HFH provides the equipment to remotely perform all in-cave operations for replacement of spent HEPA filters and maintenance on the in-cave equipment. The HEPA filters and associated equipment (filter housings, dampers etc.) for C5V, PJV, and HOP are identical and therefore are all handled in the same manner. The major equipment items in the HFH supporting these tasks are as follows:

- In-cave bridge crane with power manipulator and hoist
- Assorted in-cave tooling
- Master slave manipulators (MSM) and in-cave work station
- Tool posting port and glovebox
- In-cave decontamination station
- Export hatch to the drum transfer tunnel of the radioactive solid waste handling system (RWH)
- Maintenance area equipment shield doors between the filter cave and the crane maintenance area (CMA)
- Bridge crane in CMA for maintenance activities
- Shielded personnel access door to the CMA
- Assorted tooling in the CMA

During process operations, personnel access is limited to the C3/R3/R5 CMA (H-0201) and C2/C3/R2 filter lay down room (H-0103) located immediately below the CMA. The CMA serves as a dedicated maintenance area for HFH equipment and is located at the north end of the filter cave.

Description (requirements, design details, features, etc.) of the facility features, such as (but not limited to) facility lighting, shielded windows, and floor sumps, is provided in the HLW facility design description. The RLD system design description provides description of the sump level detection equipment, piping, and appurtenances.

Figure 2-1 provides a contextual depiction of the HFH in terms of its primary interrelationships with other systems and utilities. This diagram does not differentiate among some utilities that have both normal and safety service provisions. This diagram is used in support of functional and performance definition at the system level. Bold, blue arrows are used in the figure to highlight the primary functions of the HFH and the black arrows illustrate the supporting systems and utilities. Figure 2-2 provides a mechanical flow diagram of the overall HFH. See Section 1.5.2 for the list of relevant system designators.

Figure 2-1 High-Level Waste Filter Cave Handling System Context Diagram

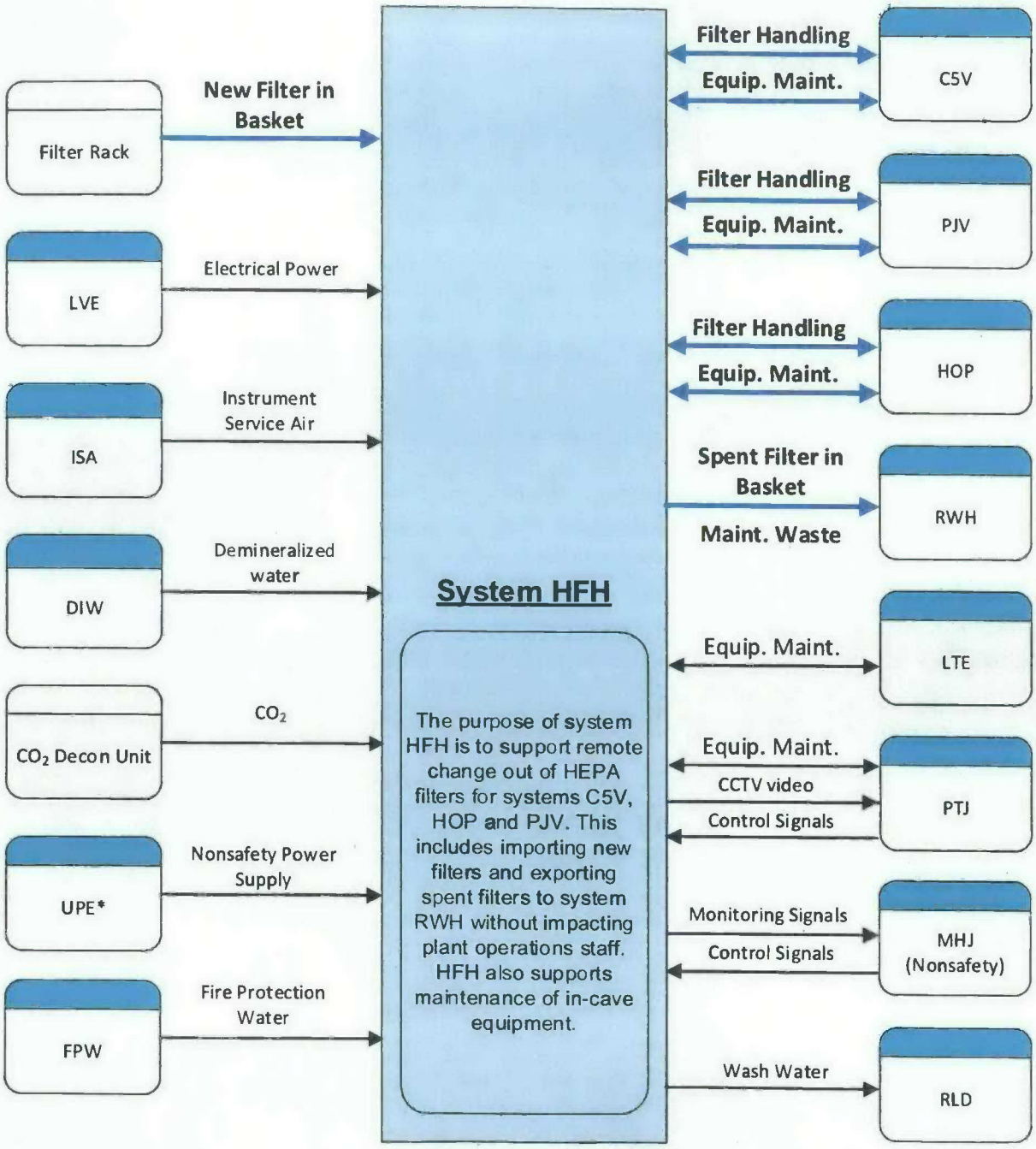

* An interface with UPE exists in the current design, but there are no functional requirements identified for UPE nonsafety power supply.

Figure 2-2 High-Level Waste Filter Cave Handling System Mechanical Handling Diagram

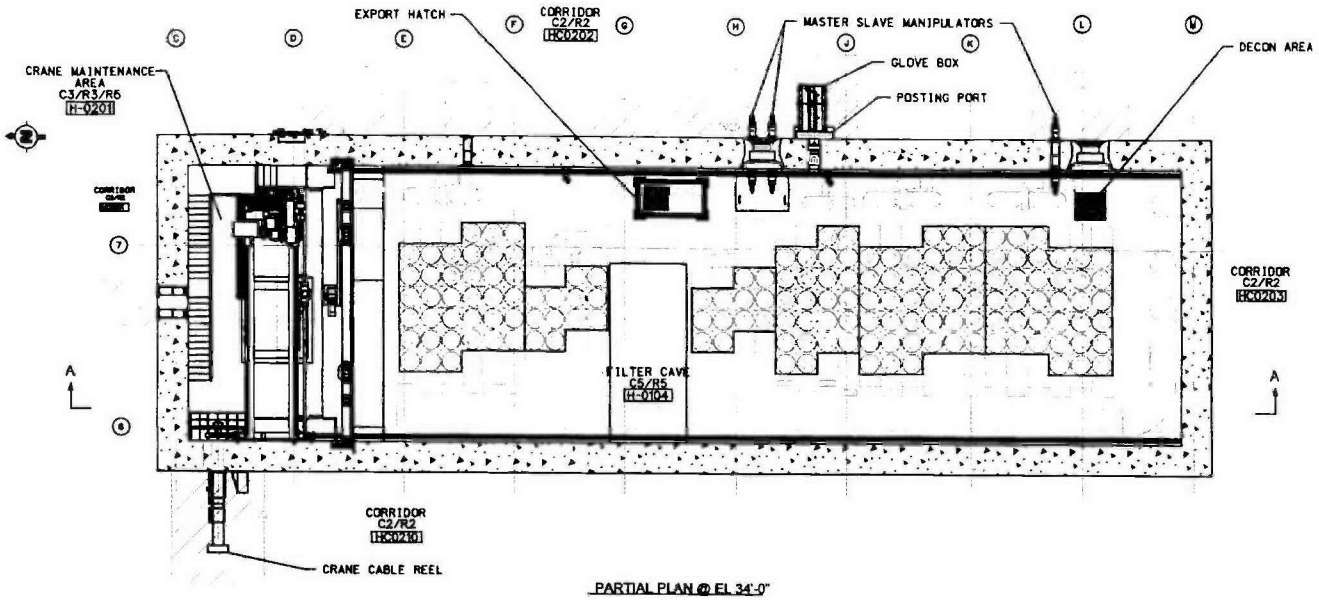

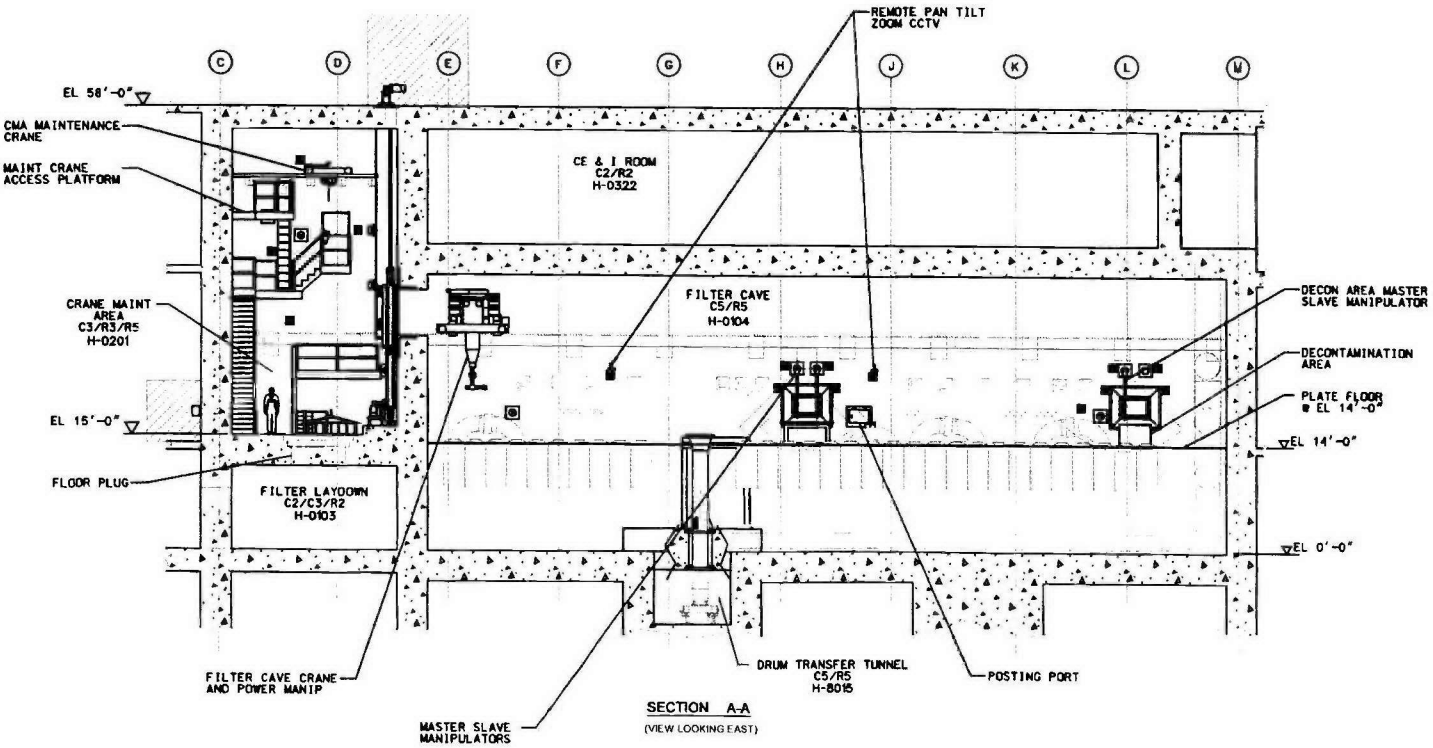

2.1 System Functions/Safety Functions

This section defines the HFH functions and attributes that need to be addressed by the system design. Figure 2-3 provides the functional block diagram for the HFH, indicating the internal and external systems and utilities that provide the primary support or interface for that function. Section 3 provides the design requirements to meet both functional and other requirements.

System interfaces are provided for reference only. Section 1.5.2 provides a list of relevant system designators.

The functions included in Figure 2-3 are the primary and secondary level functions of the HFH. These functions are further described in Table 2-1. Where appropriate to support definition of functional and design requirements, functions have been further decomposed and additional levels of supporting functions are also described. The requirement section number provides the location of the applicable functional analysis incorporated into system requirements.

Appendix B provides a further decomposition of system functions, including initiating, terminating, and integrating events and functions.

2.2 System Classification

The HFH contains components with the following classifications and designations:

- ☒ Safety Class
- ☒ Safety Significant
- ☒ Dangerous Waste Permit affecting
- ☐ Air Permit affecting
- ☐ Waste Acceptance Impacting
- ☒ General

2.3 Basic Operational Overview

A functional description of the system is provided in Sections 2 and 2.1, which provide the context diagram for the system, interfaces with other systems, and a simplified system diagram. A functional block diagram is provided in Figure 2-3 and descriptions of the system functions are provided in Table 2-1. Detailed operational information is provided in Section 4.

Figure 2-3 High-Level Waste Filter Cave Handling System Functional Block Diagram

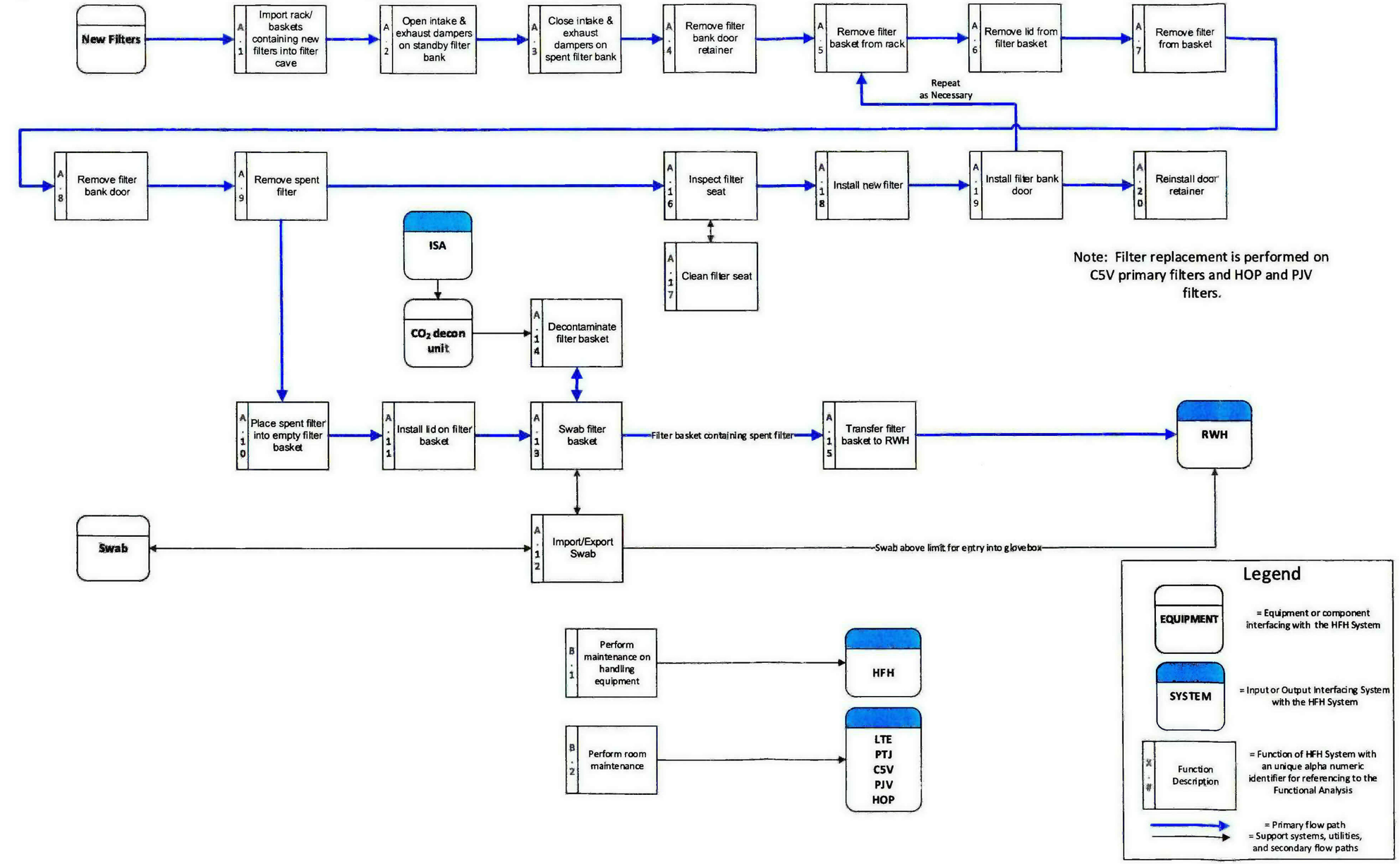

Figure 2-3 (continued) - High-Level Waste Filter Cave Handling System Functional Block Diagram

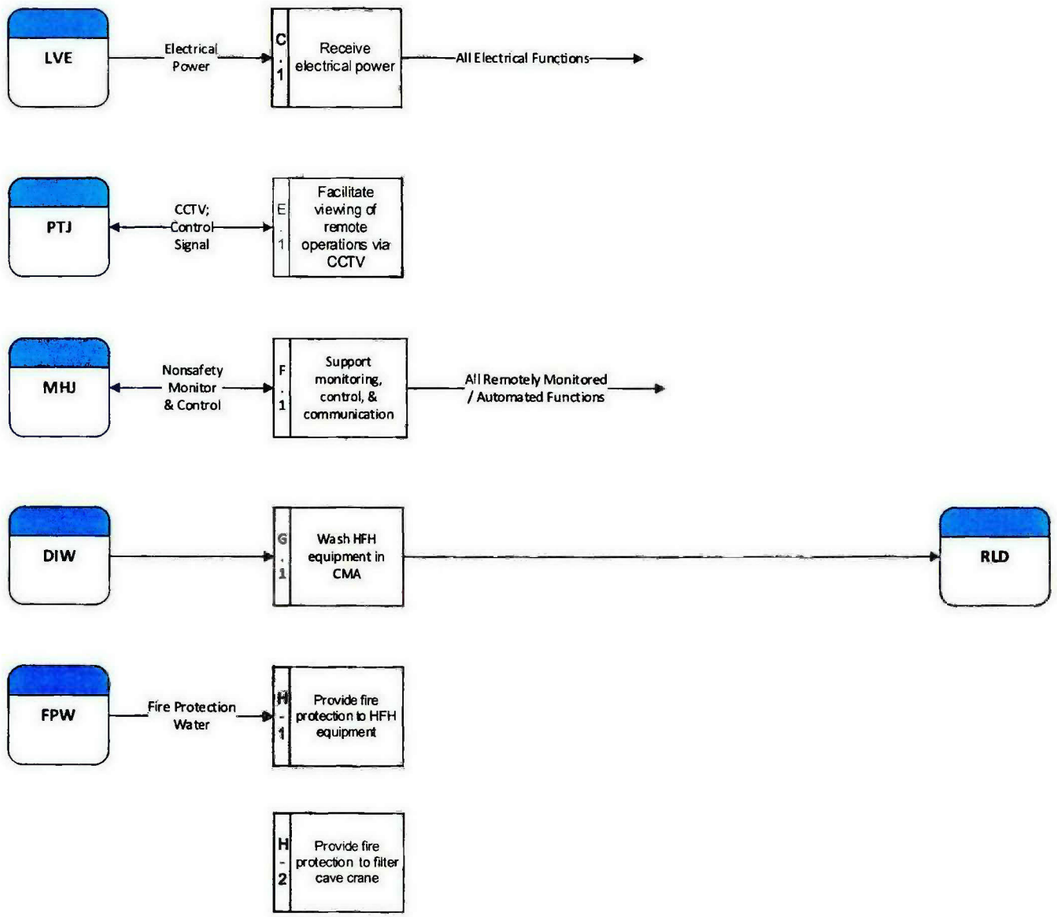

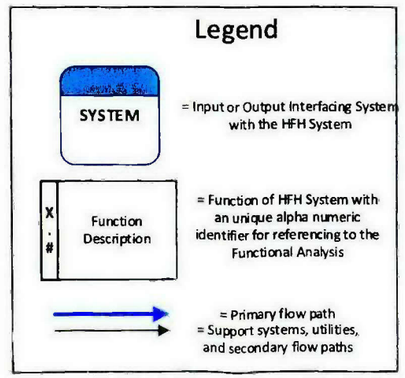

Table 2-1 Functional Analysis and Crosswalk to Requirements

Reference	Functional Analysis Description	Requirement Section No.
A.	**Replace Filters (applies to C5V, HOP, and PJV)**	N/A
A.1.	Import rack with baskets containing new filters into the filter cave – The filter import rack (HFH-MHAN-00004) is loaded in the filter lay down area with filter disposal baskets (30-MHAN-00019) containing new filters. The filter import rack is then imported into the filter cave.	3.5.1.6
A.1.1.	The filter disposal baskets are placed into the filter import rack in the filter lay down area by operations personnel. A new filter is placed into each filter disposal basket, and the filter disposal baskets are sealed with lids.	N/A
A.1.2.	The filter cave maintenance area crane (HFH-CRN-00001) is used to open the CMA floor plug to access the filter lay down area for import of the filter rack into the CMA.	3.5.1.6
A.1.3.	The filter cave maintenance area crane is used to raise the import rack through the CMA floor hatch and set it in a convenient area on the CMA floor.	3.5.1.6
A.1.4.	The CMA floor plug is closed after the filter import rack is successfully placed on the CMA floor set down area.	3.5.1.6
A.1.5.	The filter cave horizontal and vertical maintenance area equipment shield doors shield doors (HFH-DOOR-00001 and HFH-DOOR-00002) are opened by either the control room or a local operator interface (LOI) to allow the passage of the filter import rack from the CMA to the filter cave.	3.5.1.6
A.1.6.	The filter cave crane and power manipulator (HFH-CRN-00002) is used to transport the filter import rack into the filter cave.	3.5.1.6
A.1.7.	Once the filter import rack is inside the filter cave, the filter cave maintenance area equipment shield doors are closed.	3.5.1.6
A.1.8.	The filter cave crane and power manipulator positions the filter import rack at a convenient set down location near the filter cave tool rack (HFH-MHAN-00006).	3.5.1.6
A.2.	Open intake and exhaust dampers on standby filter bank – Using the master slave manipulator (MSM), the nut runner (HFH-TOOL-00003) is connected to the filter cave crane and power manipulator while sitting on the filter cave tool rack. The nut runner is then used to unscrew the damper lead screw nut(s) and open the damper(s).	3.5.1.5, 3.5.4.7, 3.9.1.2
A.3.	Close intake and exhaust dampers on spent filter bank – The nut runner is used to screw the damper lead screw nut back into the damper, thus closing the damper(s) on the filter bank that required filter change out. The nut runner is then set down on the filter cave tool rack and disconnected from the filter cave crane and power manipulator using the MSM.	3.5.1.5, 3.5.4.7, 3.9.1.2
A.4.	Remove filter bank door retainer –The filter cave crane and power manipulator arm engages its fingers with the retainer pins and pulls them from the retainer guide plates one at a time. The filter cave crane and power manipulator then lifts the door retainer with the crane hook and moves it to a convenient set down location.	3.5.1.5

Table 2-1 Functional Analysis and Crosswalk to Requirements

Reference	Functional Analysis Description	Requirement Section No.
A.5.	Remove filter disposal basket from rack - The filter grapple (HFH-TOOL-00005) on the filter cave crane and power manipulator hoist hook is used to raise the filter disposal basket clear of the filter import rack and set it down near the MSM.	3.5.4.7, 3.9.1.1
A.6.	Remove lid from filter disposal basket – The lid of the filter disposal basket is removed using the rotating hook or MSM, or a combination of both. The lid is then set down adjacent to the filter disposal basket.	3.9.1.1, 3.9.1.8
A.7.	Remove filter from basket – The filter grapple is used to lift the new filter clear of the open filter disposal basket and set it down in a convenient location.	3.9.1.1
A.8.	Remove filter bank door – Using the filter grapple, the filter bank door lid is raised clear of the filter bank housing and set down in a convenient location adjacent to the filter bank.	3.5.1.5, 3.9.1.1
A.9.	Remove spent filter – The filter grapple is used to lift the spent filter clear of the filter bank housing.	3.5.1.5, 3.9.1.1
A.10.	Place spent filter into empty filter disposal basket - The filter grapple is used to lower the spent filter into the filter disposal basket.	3.9.1.1
A.11.	Install lid on filter disposal basket – The filter grapple is used to retrieve the previously staged filter disposal basket lid, position the lid on the filter disposal basket, and secure the lid with the filter disposal basket with the rotating hook or MSM, or a combination of both.	3.9.1.1, 3.9.1.8
A.12.	Import/export swab – The new or used swabs are imported or exported into and out of the filter cave, posting port, and glovebox to perform the swabbing operation, check for contamination, and dispose of the used swab.	3.7.1.1
A.12.1.	The out-cave shield door is opened or closed to accept swabs into and out of the posting port and glovebox. The out-cave shield door is interlocked to a gamma monitor to prevent the out-cave door from opening on detection of a high radiation source.	3.7.1.1, 3.10.1.4.6
A.12.2.	The swabs are imported or exported into and out of the posting port using the posting port transport tray and MSM to check the swabs for contamination.	3.7.1.1, 3.7.1.3, 3.8.1.1
A.12.3.	The in-cave shield door is opened or closed to accept or prevent swabs into and out of the posting port and filter cave. The in-cave and out-cave shield doors are interlocked to prevent both doors being open simultaneously.	3.7.1.1, 3.10.1.4.1
A.12.4.	The swab is imported or exported into or out of the filter cave using the MSM to perform the swabbing operation on equipment and bring the used swabs back into the posting port.	3.8.1.1
A.12.5.	The swab contamination level is monitored in the posting port and glovebox using stationary and hand-held gamma monitors.	3.7.1.2, 3.7.1.3
A.13.	Swab filter disposal basket - The filter disposal basket is swabbed to determine its level of contamination.	3.8.1.1, 3.9.1.1
A.13.1.	The filter cave crane and power manipulator positions the filter disposal basket to within reach of the MSM using the filter grapple.	3.9.1.1

Table 2-1 Functional Analysis and Crosswalk to Requirements

Reference	Functional Analysis Description	Requirement Section No.
A.13.2.	The MSM engages the swab handling tool and prepares the swab for swabbing operation on the posting port tray.	3.8.1.1
A.13.3.	The swabbing operation is performed on the filter disposal basket.	3.8.1.1
A.13.4.	The used swab is placed on the posting port tray for export using the MSM.	3.8.1.1
A.14.	Decontaminate filter disposal basket – The filter disposal basket is transferred to the decontamination station at the southeast corner of the filter cave and decontaminated to remove loose contamination using the MSM to manipulate the CO_2 spray lance (HFH-TOOL-00013) or the portable in-cave vacuum (HFH-TOOL-00002) as required.	3.4.4.2, 3.9.1.3, 3.11.3.1
A.15.	Transfer filter disposal basket to RWH – The filter disposal basket is transferred through the filter cave export hatch (HFH-HTCH-00001) from the filter cave to the RWH drum transfer bogie.	3.5.1.5, 3.9.1.1
A.15.1.	The filter cave export hatch is opened to transfer the filter disposal basket to RWH following decontamination. The filter cave export hatch cover is removed using the filter cave crane and power manipulator hoist hook.	3.5.1.2
A.15.2.	The filter grapple is used to transport and lower the filter disposal basket through the filter cave export hatch into the 55 gal drum on the bogie for transfer to RWH.	3.5.1.5, 3.9.1.1
A.15.3.	The filter cave export hatch cover is replaced following successful placement of the filter disposal basket onto the drum transfer bogie (RWH).	3.5.1.2
A.16.	Inspect filter seat – The filter cave crane and power manipulator arm is moved to position the wrist-mounted camera above the filter housing spent filter seat. The filter seat is then inspected for any remaining filter sealing compound.	3.4.3.1
A.17.	Clean filter seat - If cleaning is necessary, the filter cave crane and power manipulator will deploy a filter seat cleaning tool (HFH-TOOL-00004) and the portable vacuum to remove filter seal deposits from the sealing surface of the filter bank.	3.5.4.7, 3.9.1.4
A.18.	Install new filter –The filter grapple is used to retrieve the previously staged new filter and lower it into the filter bank seat.	3.5.1.5, 3.9.1.1
A.19.	Install filter bank door - The filter grapple is used to retrieve the previously staged filter bank door and reinstall door on top of the filter bank opening.	3.5.1.5, 3.9.1.1
A.20.	Reinstall door retainer – The filter cave crane and power manipulator crane hook is used to retrieve the door retainer and position it on top of the filter bank doors. The filter cave crane and power manipulator arm engages the fingers with the retainer pin tab, removes the pins from storage pipes, and reinstalls them in the retainer guide plates.	3.5.1.5

Table 2-1 Functional Analysis and Crosswalk to Requirements

Reference	Functional Analysis Description	Requirement Section No.
B.	**Support Maintenance of In-Cave Equipment**	N/A
B.1.	Perform maintenance on handling equipment – The filter cave crane and power manipulator is the main tool used for interfacing with in-cave equipment that requires maintenance. Larger equipment is decontaminated and relocated to the CMA for hands-on maintenance.	3.4.4.1
B.1.1.	The filter cave crane and power manipulator is retrieved to the CMA for maintenance.	3.4.4.1, 3.5.1.4
B.1.2.	The MSM slave arms are removed/replaced in-cave and transferred to the CMA using the filter cave crane/power manipulator and lifting beam.	3.4.4.1, 3.8.4.1
B.1.3.	All in-cave equipment is removed or replaced in-cave when possible using the filter cave crane and power manipulator. Larger equipment is transferred to the CMA using the filter cave crane and power manipulator.	3.4.4.1
B.1.4.	The portable vacuum (HFH-TOOL-00002) filter is remotely replaced in the filter cave using the filter cave crane and power manipulator arm.	3.4.4.1
B.1.5.	Shield doors include recovery systems (HSH-RCVY-00003, HSH-RCVY-00006, and HSH-RCVY-00015) to recover maintenance area equipment shield doors to the closed position.	3.4.4.1, 3.6.4.3
B.1.6.	The filter grapple is manually disengaged from hoisted items using the MSM, to recover grapple in the event of a failure of the normal release mechanism.	3.9.4.1
B.2.	Perform room maintenance - The filter cave crane and power manipulator is the main tool used for interfacing with in-cave items that require maintenance. Larger items are decontaminated and relocated to the CMA for hands-on maintenance.	N/A
B.2.1.	The in-cave lights are retrieved and reinstalled using the filter cave crane, power manipulator, and light change-out tool (decontaminated if necessary) and returned to the CMA for further maintenance.	3.5.4.7, 3.9.1.5
B.2.2.	The in-cave cameras are retrieved and reinstalled using the filter cave crane and power manipulator (decontaminated if necessary) and returned to the CMA for further maintenance.	3.5.1.7
B.2.3.	Upon failure of the isolation damper internal mechanisms, the filter cave crane and power manipulator disengages (and re-engages) the damper housing nuts using an impact wrench (HFH-TOOL-00001). The filter cave crane and power manipulator then uses the crane hook to engage with the lifting bail and remove (and install) the damper internal assembly from the housing for maintenance or replacement.	3.5.4.7, 3.9.1.6, 3.5.1.8
B.2.4.	The HEPA filter bank door seals are remotely replaced using the filter cave handling equipment.	3.9.1.7

Table 2-1 Functional Analysis and Crosswalk to Requirements

Reference	Functional Analysis Description	Requirement Section No.
C.	**Electrical Power**	N/A
C.1.	Receive electrical power – The low voltage electrical (LVE) (480/208/120 V) system provides electrical power to the HFH equipment and instruments.	N/A
D.	NOT USED	N/A
E.	**Remote Viewing by Closed Circuit Television Video (CCTV)**	N/A
E.1.	Use CCTV to facilitate viewing of remote operations.	3.4.3.1
F.	**Mechanical Handling Monitoring and Control**	N/A
F.1.	Support monitoring, control, and communication – The mechanical handling control system (MHJ) provides nonsafety monitoring and control functions.	N/A
F.1.1.	The MHJ provides control and monitoring to MH equipment involved in the following filter or filter cave equipment transfers: • Import of filters and filter disposal baskets from CMA to the filter cave • Movement of an empty filter disposal basket or filter disposal basket containing a filter in the filter cave • Replacement of spent filter with new filter • Transfer of filter disposal basket to the RWH transfer bogie • Removal, replacement, and transfer of in-cave equipment and components for maintenance purposes	3.10.1.3
F.1.2.	The MHJ provides monitoring and control of the shield doors in the filter cave.	3.10.1.3, 3.10.1.8
F.1.3.	The MHJ provides monitoring and control of the following equipment recovery devices: Filter cave crane reeling system.	3.10.1.3
F.1.4.	The MHJ provides nonsafety interlocks for the following functions: • Interlock of horizontal and vertical equipment shield doors to prevent equipment damage • Positional interlocks of filter cave crane to prevent equipment damage	3.10.1.4.2, 3.10.1.4.3, 3.10.1.4.4
G.	**Equipment Decontamination**	N/A
G.1.	Decontaminate HFH equipment in the CMA – Water from the demineralized water system (DIW) is used to decontaminate the HFH equipment. (Rinsate is collected in floor sumps and transferred to the RLD system as described in the HLW facility and the RLD system design descriptions which includes the sump level detection equipment, piping, and appurtenances.)	3.4.4.3

Table 2-1 Functional Analysis and Crosswalk to Requirements

Reference	Functional Analysis Description	Requirement Section No.
H.	**Fire Protection**	N/A
H.1.	Provide fire protection to HFH equipment.	N/A
H.1.1.	Fire protection water system (FPW) supplies water to the automatic sprinkler system inside the glovebox (HFH-GB-00001) enclosure.	3.7.4.2, 3.7.4.6
H.1.2.	FPW supplies water to the automatic sprinkler system inside the filter cave crane cable reel (HFH-MHAN-00001) enclosure.	3.5.3.1
H.2.	Provide fire protection to filter cave crane.	3.5.4.8

3 Design Requirements

3.1 Requirements

Requirements are documented in Sections 3.4 through 3.12. Each requirement statement is accompanied by a basis discussion (as needed) and the expected means of verification. Requirements must be met in design. If a requirement stated in this document cannot be met in design, a revision to the requirement needs to be pursued, if possible, or the design must be changed to meet the requirement. Requirements preceded by "**[HOLD]**" may only be used in support of preliminary or committed design, which shall also be issued with appropriate holds per procedure 24590-WTP-3DP-G04B-00046, *Engineering Drawings*. These requirements may not be used in support of fabrication or construction.

The following abbreviations are used to designate the selected method for verification (see 24590-WTP-GPG-ENG-0161, *Technical Requirements Management*, for additional guidance concerning methods of verification):

(I) Inspection
(A) Analysis
(D) Demonstration
(T) Test

The following abbreviations are used to designate the organization responsible for performing the verification:

(ENG) Engineering
(CON) Construction
(SU) Startup
(COM) Commissioning
(SUP) Supplier
(SUB) Subcontractor
(SQR) Supplier Quality Representative
(REC) Receiving

3.2 Bases

Basis discussions are provided as needed to explain the decomposition or interpretation from the originating source requirement(s). Where a [**HOLD**] has been applied to a requirement, this section will include the basis for the "HOLD."

3.3 References

The requirements include a source document reference and a requirement object identification number (ROIN) included in brackets following the requirement statement. Each unique source document reference, with ROIN number(s), is bracketed separately. Requirements may include a reference to Section 2.2, Functional Description, which are listed in parentheses following the source document and ROIN number references. A complete list of all source references is provided in Section 5.1.

3.4 General Requirements

3.4.1 Mission and Functional / Performance Requirements (Including States/Modes)

3.4.1.1 Design Life

3.4.1.1.1 Minimum Design Life

Requirement: The HFH equipment and components shall be designed for a minimum design life of 40 years, inclusive of maintenance. All non-maintainable items of equipment shall be designed to last the life of the facility. Design life of in-cave equipment shall consider the effects of chemical, radiological and thermal exposure. [Section C.7(a)(1), DOE Contract DE-AC27-01RV14136 (WTP Contract), ROIN: 1-25930][Sections 11.1.1, 11.4.1, 11.7.4, 11.8.3, 24590-WTP-DB-ENG-01-001, *Basis of Design* (BOD), ROIN: 1-41120, ROIN: 1-41154, ROIN: 1-41211, ROIN: 8-6564, ROIN: 1-41214][Sections 14.1, 14.8, 24590-WTP-RPT-OP-01-001, *Operations Requirements Document* (ORD), ROIN: 8-3584, ROIN: 8-7839]

Basis Discussion: Equipment and material selection is based on proven performance, value engineering principles, and fit-for-function principles. The selection of equipment and materials is further addressed in detail as the design progresses. Essentially, all non-maintainable equipment located within cells where routine access is not possible is selected to have a design life commensurate with that of the facility. In-cave equipment design considers the routine environmental exposures under normal operations for non-safety equipment; safety and equipment also considers abnormal and emergency exposures – this minimizes the need for equipment maintenance, exposure and radiological waste generation in radiological areas. [ALARA]

Verification: Verification is expected to be achieved through the following:

Verif. Method	Verif. By	Plan	Notes/Comments
A/T	ENG	The "qualified" design life for safety SSCs is to be verified through equipment environmental qualification documentation that may be accomplished through analysis or testing.	Document verification in equipment qualification package (EQP) and through supplier/subcontractor certificate of conformance.
I	ENG	Verify the supplier certificate of conformance (or subcontractor submittals for HVAC) versus design life requirement established in the material requisition (specification or datasheet) for non-safety SSCs.	

3.4.1.1.2 Room Environment Conditions for Safety SSCs

Requirement: The HFH system safety SSCs shall be designed to operate and withstand the most severe environmental conditions identified for the room in which they are installed, inclusive of aging effects, throughout their qualified life. [Safety Criterion 4.4-1, 24590-WTP-SRD-ESH-01-001-02, *Safety Requirements Document, Volume II* (SRD), ROIN: 1-38690][Section 14.8, ORD, ROIN: 8-7839][Section 11.4.1, 11.7.3, BOD, ROIN: 1-41154, ROIN: 8-13212]

Basis Discussion: Safety SSCs designated as safety class (SC) and safety significant (SS) are designed and qualified to perform their safety function as intended in the room environment conditions associated with the events for which they are intended to respond. The effects of aging on normal and abnormal functioning are considered in design and qualification. *HLW Room Environment Data Sheet*, 24590-HLW-U0D-W16T-00001, identifies environmental conditions for rooms that house safety SSCs. HFH safety equipment are located in the HLW filter cave (room H-0104), the HLW filter cave crane maintenance area (H-0201), filter lay down area (H-0103), rooms H-0402 and H-0301, and the corridor HC0202.

Verification: Verification is expected to be achieved through the following:

Verif. Method	Verif. By	Plan	Notes/Comments
A/T	ENG	Perform analysis or testing to verify the ability of the SSCs credited with a safety function to withstand the specified environmental conditions for the room in which they are installed.	Document in EQP. See *HLW Room Environment Data Sheet*, 24590-HLW-U0D-W16T-00001, for room environmental conditions.
I	ENG	Review design of safety SSCs to verify conformance to the as-tested or analyzed configuration.	May be accomplished by EQP or separate evaluation/assessment.

3.4.1.1.3 Room Environment Conditions for Nonsafety SSCs

Requirement: Nonsafety equipment and components shall be designed to operate and withstand the service conditions per Table 12-1 in the BOD. [Table 12-1, BOD, ROIN: 2-39187, ROIN: 2-39190][Sections 11.16, 16.1, ORD, ROIN: 14-1248E, ROIN: 8-7000]

Basis Discussion: Nonsafety SSCs are designed to function as intended in the room environment conditions associated with their location.

Verification: Verification is expected to be achieved through the following:

Verif. Method	Verif. By	Plan	Notes/Comments
I	ENG	Review of design of nonsafety SSCs to verify compliance with the service conditions associated with their location.	Document in an evaluation/assessment.

3.4.1.1.4 Nonmaintainable Soft or Nonmetallic Parts

Requirement: HFH equipment and components in the filter cave shall not contain nonremoveable soft or nonmetallic parts. [Sections 16.2, 16.4.1.1, BOD, ROIN: 43-507, ROIN: 8-5233F][Section 20, ORD, ROIN: 9-56]

Basis Discussion: In the filter cave (H-0104), the area out-of-reach of the filter cave crane and power manipulator and the area below the filter deck have been designated as hard-to-reach areas. The equipment in the filter cave is

also subject to radiation exposure. As such, components in the filter cave do not include soft or nonmetallic parts that cannot be removed and replaced. [ALARA]

Verification: Verification is expected to be achieved through the following:

Verif. Method	Verif. By	Plan	Notes/Comments
I	ENG	Review of design to verify there are no hard-to-reach soft or nonmetallic parts.	May be accomplished by evaluation/assessment.

3.4.2 Nuclear Safety, ALARA, Environmental and Other Regulatory Requirements

3.4.2.1 Safety Designations

Requirement: The following SSCs shall be designated as safety SSCs (see Table 3-1 below): [Safety Criterion 4.1-2, 4.1-3, 4.4-1, SRD, ROIN: 1-38650, ROIN: 1-38653, ROIN: 1-38690] [Sections 4.3.1.2, 4.3.4, 4.3.4.1, 4.3.9, 4.3.9.1, 4.3.9.2, 4.3.9.3, 4.4.1, 4.4.1.1, 4.4.1.2, 4.4.2.2, 5.6.32, 24590-WTP-PSAR-ESH-01-002-04, *Preliminary Documented Safety Analysis to Support Construction Authorization; HLW Facility Specific Information* (PDSA - HLW Facility), ROIN: 1-21509, ROIN: 2-41303, ROIN: 45-31104, ROIN: 2-41302, ROIN: 40-11525, ROIN: 40-11526, ROIN: 40-2715, ROIN: 40-11534, ROIN: 40-11648, ROIN: 2-46201, ROIN: 1-21615A, ROIN: 40-2713, ROIN: 40-2714, ROIN: 1-21623, ROIN: 40-26626][Appendix A, Table A-1, *Preliminary Fire Hazards Analysis for the High-Level Waste Building* (PFHA-HLW), ROIN: 40-30038, ROIN: 45-35025, ROIN: 45-35026]

Table 3-1 High-Level Waste Filter Cave Handling System Safety Designations

Equipment/ Component Description	Safety Function	Safety Classification	References
Shielded Personnel Access Door (HFH-DOOR-00004)	Mitigate the consequences of an airborne release to the public and co-located workers by providing a high-integrity confinement boundary evaluated for design basis accident (seismic and fire) conditions. (SC Function) Prevents or mitigates the exposure to direct radiation (SS Function)	SC SS	Sections 4.3.4, 4.3.9, 4.3.9.1, 4.3.9.2, 4.4.1 PDSA - HLW Facility, ROIN: 2-41303, 2-41302, 40-11525, 40-11526, 40-2715, 40-11525, 40-11648; Appendix A, Table A-1, PFHA-HLW, ROIN: 40-30038, 45-35025, 45-35026
Horizontal and Vertical Filter Cave Crane Maintenance Area Shield Doors (HFH-DOOR-00001, HFH-DOOR-00002)	Prevents or mitigates the exposure to direct radiation Mitigates consequences of an airborne release of radioactive material by providing an engineered air gap to maintain cascade airflow	SS	Sections 4.4.1, 4.4.1.1, 4.4.1.2, PDSA - HLW Facility, ROIN: 2-46201, 1-21615A, 40-2713, 40-2714
Vertical Shield Door (HFH-DOOR-00002) Bridge Beam	Mitigate the consequences of an airborne release to the public and co-located workers by providing a high-integrity confinement boundary evaluated for design basis accident (seismic and fire) conditions.	SC	Section 4.3.1.2, 4.3.4 PDSA - HLW Facility, ROIN: 1-21509, 2-41303; Appendix A, Table A-1, PFHA-HLW, ROIN: 40-30038, 45-35025, 45-35026

Table 3-1 High-Level Waste Filter Cave Handling System Safety Designations

Equipment/ Component Description	Safety Function	Safety Classification	References
Filter Cave Crane Cable Reel (HFH-MHAN-00001) Penetration[a]	Mitigate the consequences of an airborne release to the public and co-located workers by providing a high-integrity confinement boundary evaluated for design basis accident (seismic and fire) conditions.	SC	Section 4.3.1.2, 4.3.4, PDSA - HLW Facility, ROIN: 1-21509, 2-41303; Appendix A, Table A-1, PFHA-HLW, ROIN: 40-30038, 45-35025, 45-35026
Filter Cave Crane Cable Trough[b] (HFH-MHAN-00001)	Prevents or mitigates the exposure to direct radiation (SS)	SS	Section 5.6.32, PDSA - HLW Facility, ROIN: 40-26626
Master Slave Manipulator (HFH-MANIP-00003, -00004, and -00005) Through Wall Shielding Seal Tube[a]	Mitigate the consequences of an airborne release to the public and co-located workers by providing a high-integrity confinement boundary evaluated for design basis accident (seismic and fire) conditions. (SC Function) Prevents or mitigates the exposure to direct radiation (SS Function)	SC SS	Section 4.3.1.2, 4.3.4, 4.4.2.2 PDSA - HLW Facility, ROIN: 1-21509, 2-41303, 1-21623; Appendix A, Table A-1, PFHA-HLW, ROIN: 40-30038, 45-35025, 45-35026
Posting Port (HFH-TWDVC-00003)[a]	Mitigate the consequences of an airborne release to the public and co-located workers by providing a high-integrity confinement boundary evaluated for design basis accident (seismic and fire) conditions. (SC Function) Prevents or mitigates the exposure to direct radiation (SS Function)	SC SS	Section 4.3.1.2, 4.3.4, 4.4.2.2 PDSA - HLW Facility, ROIN: 1-21509, 2-41303, 1-21623; Appendix A, Table A-1, PFHA-HLW, ROIN: 40-30038, 45-35025, 45-35026
Horizontal Shield Door Recovery Plug (HFH-RCVY-00004)[a]	Mitigate the consequences of an airborne release to the public and co-located workers by providing a high-integrity confinement boundary evaluated for design basis accident (seismic and fire) conditions.	SC	Section 4.3.1.2, 4.3.4, PDSA - HLW Facility, ROIN: 1-21509, 2-41303; Appendix A, Table A-1, PFHA-HLW, ROIN: 40-30038, 45-35025, 45-35026

[a] For items that are part of the C5V boundary or that penetrate the C5V boundary, the attribute(s) of the component necessary to keep the item in the penetration and to ensure the body of the item does not fail are SC.
[b] Safety function and SS classification applies to the portions of the filter cave crane cable trough located within the crane maintenance area and to the filter cave crane cable reel housing, including guide features located between the reel housing and the cable trough.

Basis Discussion: To ensure safety SSCs meet the design functions, Safety Criterion 4.4-1 of the SRD states:

> "Safety structures, systems, and components designated as Safety Class and Safety Significant shall be designed and qualified to function as intended in the environments associated with the events for which they are intended to respond. The effects of aging on normal and abnormal functioning shall be considered in design and qualification."

[ALARA]

Verification: Verification is expected to be achieved through the following:

Verif. Method	Verif. By	Plan	Notes/Comments
I	ENG	Verify that the safety classifications and functions, as established in the PDSA and documented safety analysis (DSA), are correctly reflected in the equipment qualification datasheet, in supporting documentation in the EQP, and, when applicable, in the Safety System Requirements Specification (SSRS).	May be accomplished by EQP and/or design verification report (DVR).

3.4.2.2 Seismic Design

Requirement: [**HOLD**] Elements of the HFH shall be designed for seismic conditions in accordance with Table 3-2 below: [Sections 4.3.1, 4.3.1.2, 4.3.9, 4.3.9.2, 4.3.9.3, 4.3.9.4, 4.4.1, 4.4.1.2, 4.4.1.4, PDSA - HLW Facility, ROIN: 1-21507, ROIN: 1-21509, ROIN: 2-41302, ROIN: 40-11525, ROIN: 40-2715, ROIN: 40-11534, ROIN: 40-11536, ROIN: 2-46201, ROIN: 40-2713, ROIN: 40-2714, ROIN: 14-7010, ROIN: 45-31547][Safety Criterion 4.1-3, SRD, ROIN: 1-38653]

Table 3-2 High-Level Waste Filter Cave Handling System Seismic Design Categories

Description	Seismic Category	Reference
Shielded Personnel Access Door (HFH-DOOR-00004)	SC-I	Sections 4.3.9, 4.3.9.2, 4.3.9.4, PDSA - HLW Facility, ROIN: 2-41302,40-11525,40-2715, 40-11536
Horizontal and Vertical Filter Cave Crane Maintenance Area Shield Doors (HFH-DOOR-00001, HFH-DOOR-00002)	SC-II	Sections 4.4.1, 4.4.1.2, 4.4.1.4, PDSA - HLW Facility, ROIN: 2-46201,40-2713,40-2714, ROIN: 45-31547,14-7010
Vertical Shield Door (HFH-DOOR-00002) Bridge Beam	SC-I	Sections 4.3.1, 4.3.1.2, PDSA - HLW Facility, ROIN: 1-21507, 1-21509
Filter Cave Crane/Power Manipulator (HFH-CRN-00002)	SC-II **[HOLD]**	--
Filter Cave Crane Cable Reel (HFH-MHAN-00001) Penetration	SC-I	Sections 4.3.1, 4.3.1.2, PDSA - HLW Facility, ROIN: 1-21507, 1-21509
Master Slave Manipulator (HFH-MANIP-00003, HFH-MANIP-00004, and HFH-MANIP-00005) Through Wall Shielding Seal Tube	SC-I	Sections 4.3.1, 4.3.1.2, PDSA - HLW Facility, ROIN: 1-21507, 1-21509
Posting Port (HFH-TWDVC-00003)	SC-I	Sections 4.3.1, 4.3.1.2, PDSA - HLW Facility, ROIN: 1-21507, 1-21509
Horizontal Shield Door Recovery Plug (HFH-RCVY-00004)	SC-I	Sections 4.3.1, 4.3.1.2, PDSA - HLW Facility, ROIN: 1-21507, 1-21509

Basis Discussion: Section 2.4.12 of 24590-WTP-PSAR-ESH-01-002-01, *Preliminary Documented Safety Analysis to Support Construction Authorization; General Information* (PDSA – General) states the following:

> "All components and parts of the equipment that provide or contribute to the safety functions and accident monitoring functions, including equipment supports and anchorage, shall be qualified accordingly."

This qualification ensures SSCs meet the designated seismic design requirements. The 24590-WTP-SRD-ESH-01-001-02, *Safety Requirements Document Volume II* (SRD), Safety Criterion 4.1-3 details the equivalence of the WTP seismic category to the seismic performance category of DOE-STD-1020-94, *Natural Phenomena Hazards Design and Evaluation Criteria for Department of Energy Facilities*. The SRD also states that SSCs designated as safety SSCs be designed to withstand the effects of natural phenomena hazards events (e.g., earthquakes, wind,

and floods) without loss of capability to perform specified safety functions. The seismic category for the filter cave crane and power manipulator (HFH-CRN-00002) is on "HOLD" due to differences between the HLW PDSA and cited source calculation 24590-HLW-S0C-S15T-00028. As documented in 24590-WTP-GCA-MGT-15-00230, 24590-HLW-S0C-S15T-00028 is cited in PDSA Section 3.4.2.1.1.5 as confirming no seismic controls are required for heavy load drops. In actuality, the calculation does not evaluate or confirm margin against floor perforation due to crane drops, but cites SC-II crane design as justification for not evaluating crane drops. [24590-WTP-ATS-MGT-15-0130]

Verification: Verification is expected to be achieved through the following:

Verif. Method	Verif. By	Plan	Notes/Comments
A/T	ENG/ SUP	Analysis or testing performed on safety SSCs to verify capability to withstand seismic event.	This is expected to be documented in the EQPs. EQPs will be prepared for all safety components. See the latest revision of 24590-WTP-PD-ENG-0001, *Equipment Qualification Program Description*, for additional information, including independent peer review of seismic evaluation of the applicable SSCs (WTP and supplier-supplied) in accordance with the requirements of DOE-STD-1020-94, *Natural Phenomena Hazards Design and Evaluation Criteria for Department of Energy Facilities*.
I	ENG	Review of design of safety SSCs to verify conformance to the results of the analysis or testing.	May be accomplished by EQP or separate evaluation/assessment.

3.4.2.3 Seismic Design for Interaction Effects

Requirement: HFH equipment not specified in Table 3-2 shall, at minimum, be designated seismic category-IV. Interaction effects shall be considered when determining the seismic category of individual items and, where an adverse seismic interaction with SC or SS equipment exists, adequate measures shall be taken to preclude the adverse interaction. [Safety Criterion 4.1-3, SRD, ROIN: 1-38653][Sections 10.2.15, D.7, D.7.1, D.7.8, BOD, ROIN: 45-21847, ROIN: 45-21848, ROIN: 45-21913, ROIN: 45-21927, ROIN: 45-21901]

Basis Discussion: In accordance with 24590-WTP-GPG-ENG-033, *Evaluation for Seismic Interaction Effects*, equipment that is non-safety may be identified as having a potential for adverse interaction with safety equipment during a seismic event. Where a resolution strategy is selected to increase the seismic category of the source SSC to protect the safety (target) SSC, the resulting seismic category of the equipment may be greater than SC-IV. In those cases, the equipment design is verified to meet the higher seismic performance category such that the target SSC is protected.

Verification: Verification is expected to be achieved through the following:

Verif. Method	Verif. By	Plan	Notes/Comments
I	ENG	Evaluate the HFH system for seismic interaction effects per 24590-WTP-GPG-ENG-033 and devise a control strategy for all open interactions.	Document in a Seismic Interaction List.
A/T	ENG/SUP	Analysis or testing performed on SSCs to demonstrate the ability to withstand the seismic loadings for their respective seismic categories to the extent necessary to prevent interactions.	Documented in an Equipment Seismic Qualification (ESQ) Review Form or supplier seismic design report.
I	ENG	Review the design to verify conformance to the as-tested/as-analyzed configuration.	Document in an evaluation/assessment.

3.4.2.4 Fire Barriers

Requirement: The following HFH equipment shall be designed with materials and methods of construction that do not reduce the required fire-resistance rating of the barrier they penetrate, as required by IBC 2000 and DOE-STD-1066-97. [Section 10.3.4.7, BOD, ROIN: 1-41107]

- Vertical shield door (HFH-DOOR-00002) bridge beam
- Horizontal shield door recovery plug (HFH-RCVY-00004)
- Shielded personnel access door (HFH-DOOR-00004)
- Filter cave crane cable reel (HFH-MHAN-00001) penetration
- Master slave manipulator (HFH-MANIP-00003, HFH-MANIP-00004, and HFH-MANIP-00005) through wall shielding seal tube
- Posting port (HFH-TWDVC-00003)

Basis Discussion: Fire barrier drawings that include barriers related to HFH are the following:

- 24590-HLW-U1-60-00001, *HLW Vitrification Building Fire Barrier Drawing Plan at El -21'-0"*
- 24590-HLW-U1-60-00002, *HLW Vitrification Building Fire Barrier Drawing Plan at El 0'-0"*
- 24590-HLW-U1-60-00003, *HLW Vitrification Building Fire Barrier Drawing Plan at El 14'-0"*
- 24590-HLW-U1-60-00004, *HLW Vitrification Building Fire Barrier Drawing Plan at El 37'-0"*
- 24590-HLW-U1-60-00005, *HLW Vitrification Building Fire Barrier Drawing Plan at El 58'-0"*

Verification: Verification is expected to be achieved through the following:

Verif. Method	Verif. By	Plan	Notes/Comments
I	ENG	Verify all components that penetrate a fire barrier are tested to not less than the required fire resistance rating of the barrier based on the fire exposure and acceptance criteria specified in ASTM E119. Use of alternative methods for determining fire resistance shall be approved by the building official.	Document in an evaluation/assessment. Evaluation/assessment is to be submitted to the building official for approval. Testing to ASTM E119 is invoked by IBC 2000 and DOE-STD-1066-97.

3.4.3 System Interface Requirements

Requirements associated with specific system interfaces are discussed in the subsequent requirement sections titled, "System Interface Requirements." System interfaces are further described in Section 4.1.2.

3.4.3.1 Viewing

Requirement: Cameras and/or shield windows shall be provided for viewing capabilities to assist in remote HFH mechanical handling operations. [Sections 11.5, 12.4, 14.8, 14.16, ORD, ROIN: 8-9102, ROIN: 1-40045, ROIN: 8-14259, ROIN: 8-14261, ROIN: 8-7838, ROIN: 8-468, ROIN: 8-14269][Section 7.2.1.5, BOD, ROIN: 1-40631](A.16, E.1)

Basis Discussion: The cameras and shield windows provide for viewing of remote operations noted in Sections 3.4.4.1, 3.4.4.2, 3.5.1.5, 3.5.1.6, 3.5.1.7, 3.5.1.8, 3.5.4.7, 3.8.1.1, 3.8.4.1, 3.9.1.1, 3.9.1.2, 3.9.1.3, 3.9.1.4, 3.9.1.5, and 3.9.1.6. As such, adequate viewing may be demonstrated as part of the verification by demonstration for remote operation of the HFH equipment and should verify that cameras for viewing operations are placed to give optimum viewing angles and distance to suit the operations. [ALARA]

Verification: Verification is expected to be achieved through the following:

Verif. Method	Verif. By	Plan	Notes/Comments
I	ENG	Review design to verify remote cameras and shield windows provide adequate viewing of the remote operations in the filter cave.	Can be accomplished with iGrip.

3.4.4 Other Technical, Specialty, Operations and Maintenance Requirements

3.4.4.1 Remotely Maintainable or Replaceable Equipment and Components

Requirement: All in-cave HFH equipment and components requiring maintenance or replacement shall be designed with remote handling features to enable removal and retrieval for maintenance or replacement, handling for decontamination and transfer to crane maintenance area or export for disposal, and installation. [Sections 5.2, 8.1.3, 9.1, 9.2, 14.8, 14.16, ORD, ROIN: 1-39929, ROIN: 1-39930, ROIN: 1-39932, ROIN: 1-39963, ROIN: 1-39969, ROIN: 8-4350, ROIN: 8-7842, ROIN: 8-9095A, ROIN: 8-472, ROIN: 8-481][Sections 11.3.2, 11.3.2.2, 11.4.1, 11.8.3.1, BOD, ROIN: 1-41132, ROIN: 1-41133, ROIN: 1-41136, ROIN: 1-41148, ROIN: 1-41151, ROIN: 1-41152, ROIN: 1-41153, ROIN: 1-41155, ROIN: 1-41215, ROIN: 2-43151](B.1, B.1.1, B.1.2, B.1.3, B.1.4, B.1.5)

Basis Discussion: The primary means for maintenance access is by remote operation. Disassembly, decontamination, removal to maintenance area, or replacement of in-cave equipment is accomplished by local remote handling equipment. After decontamination is remotely performed in the decontamination area, by wipes or CO_2 blasting, as necessary, hands-on maintenance can be performed in the crane maintenance area. In general, equipment within the filter cave that could fail during operations is designed for safe recovery or replacement. Remote handling features help to facilitate interfacing with equipment or components when using remote handling equipment such as in-cave cranes, power manipulators, or master-slave manipulators. This includes remote handling features for equipment and components, as well as cable terminations using plugs and sockets compatible with remote maintenance tools. The filter cave crane and power manipulator is intended to be retrieved to the crane maintenance area for maintenance, including under the worst-case credible failure modes. [ALARA]

Verification: Verification is expected to be achieved through the following:

Verif. Method	Verif. By	Plan	Notes/Comments
I	ENG	Review of design to verify that all replaceable or maintainable components are able to be replaced or maintained by remote handling.	Document in an evaluation/assessment. Recommend using a software program such as "IGrip" (or similar).
D	SU/COM	Demonstrate remote removal and installation in accordance with 24590-WTP-PL-RACT-RT-0001, *WTP Remotability Verification Plan*.	

3.4.4.2 Remote Decontamination

Requirement: System HFH shall provide means to perform remote decontamination, inside the filter cave, on the filter cave crane hook, and on items destined for export through the crane maintenance area or posting port. [Sections 14.8, 14.16, ORD, ROIN: 8-7840, ROIN: 8-474][Sections 11.4.1, 11.5.1, 11.8.3.1, BOD, ROIN: 1-41157, ROIN: 8-3755, ROIN: 1-41215, ROIN: 2-43152](A.14)

Basis Discussion: None. [ALARA]

Verification: Verification is expected to be achieved through the following:

Verif. Method	Verif. By	Plan	Notes/Comments
I	ENG	Review design to verify HFH equipment, facility equipment, or a combination thereof, is provided to perform remote decontamination inside the filter cave, and that the necessary support utilities are available.	Document in an evaluation/assessment. Plant Eng and Rad Eng to participate in and/or review the evaluation/assessment.

3.4.4.3 Decontamination

Requirement: System HFH shall provide a means to decontaminate equipment, including the filter cave crane, with CO_2, pressurized warm water, detergent solution, and steam. [Section 14.16, ORD, ROIN: 8-474][Section 11.8.3.1, BOD, ROIN: 2-43152](G.1)

Basis Discussion: None. [ALARA]

Verification: Verification is expected to be achieved through the following:

Verif. Method	Verif. By	Plan	Notes/Comments
I	ENG	Review design to verify HFH equipment, facility equipment, or a combination thereof, is provided to perform crane and equipment decontamination, and that the necessary support utilities are available.	Document in an evaluation/assessment. Plant Eng and Rad Eng to participate in and/or review the evaluation/assessment.

3.4.4.4 Durability for Decontamination

Requirement: HFH equipment located in the filter cave and crane maintenance area shall be designed to withstand decontamination without any reduction of functionality through degradation of the electrical, mechanical, or any other components involved. [Sections 9.1, 14.16, ORD, ROIN: 8-8065, ROIN: 8-475][Section 11.8.3.1, BOD, ROIN: 1-41215]

Basis Discussion: Components located in the C5 area are adequately decontaminated before transport to the CMA to allow for hands-on maintenance. [ALARA]

Verification: Verification is expected to be achieved through the following:

Verif. Method	Verif. By	Plan	Notes/Comments
I	ENG	Review the HFH design to verify equipment in contaminated areas can withstand decontamination without degradation or reduction in equipment functionality.	Document in an evaluation/assessment. Operations and Radiological Engineering will participate in or review evaluation/assessment.

3.4.4.5 NOT USED

3.4.4.6 Maintainable Equipment Location

Requirement: The following maintainable HFH equipment and components shall be located outside of the filter cave. [Section 11.4.1, 11.8.3.1, BOD, ROIN: 1-41149, ROIN: 2-43161][Section 9.1, ORD, ROIN: 8-4346]

- Horizontal shield door (HFH-DOOR-00001) drive mechanism
- Vertical shield door (HFH-DOOR-00002) drive mechanism
- Posting port (HFH-TWDVC-00003) actuators and instrumentation
- Filter cave crane cable reel (HFH-MHAN-00001) drive

Basis Discussion: The components that require a high degree of maintenance or service are placed out-cave, to the extent practical, where personnel have access for hands-on maintenance activities. [ALARA]

Verification: Verification is expected to be achieved through the following:

Verif. Method	Verif. By	Plan	Notes/Comments
I	ENG	Review of design to verify that the maintainable equipment listed is located outside the filter cave.	

3.4.4.7 Emergency Stop Buttons

Requirement: In accordance with Occupational Safety and Health Administration (OSHA) General Industry Standards, 29 CFR 1910, the HFH cranes shall include an emergency stop in the maintenance area, in an accessible area near the equipment. [Section 7.3.9.1, 11.5.1, BOD, ROIN: 1-40683, ROIN: 8-3757][Section 11.12.5.3, ORD, ROIN: 1-40021]

Basis Discussion: This applies to the maintenance area crane and the filter cave crane (HFH-CRN-00001 and HFH-CRN-00002). Other equipment that can present hazards to personnel, such as rotating equipment (e.g.,

shield door drives and cable reel drives) are provided with guards to eliminate such hazards, in accordance with industrial safety requirements per 29 CFR 1910.

Verification: Verification is expected to be achieved through the following:

Verif. Method	Verif. By	Plan	Notes/Comments
I	ENG	Review design of HFH cranes to verify incorporation of emergency stops.	Document in an evaluation/assessment.
D	SU/COM	Demonstrate the capability to stop equipment using the equipment's dedicated emergency stop.	

3.4.4.8 Emergency Stop Reporting

Requirement: Emergency stops shall provide a status signal, and equipment shall remain in the shutdown state until the circuit is physically reset. E-stops on equipment connected to the mechanical handling control system (MHJ) provide a status signal to the MHJ. E-stops on equipment with no MHJ connection provide a status signal for a local indicator. [Section 7.3.9.1, BOD, ROIN: 1-40684][Section 11.12.5.3, ORD, ROIN: 8-8287]

Basis Discussion: None.

Verification: Verification is expected to be achieved through the following:

Verif. Method	Verif. By	Plan	Notes/Comments
I	ENG	Review of design to verify that emergency stops provide the appropriate status signal, based on parent equipment connectivity to the MHJ, and remain in the shutdown state until the circuit is physically reset.	
D	SU/COM	Demonstrate emergency stop reporting and reset functions.	

3.4.4.9 Modular Components

Requirement: The HFH cranes, hoists, and crane cable reels shall include modular, separable components for ease of maintenance. This consists of the following: [Section 11.8.3.1, BOD, ROIN: 2-43147][Section 14.16, ORD, ROIN: 1-40089]

- Wheel assemblies
- Hoist gear boxes, motors, and brakes
- Trolley gear boxes, motors, and brakes
- Bridge gear boxes, motors, and brakes
- Cable reel enclosure and cassette

Basis Discussion Motors, gear reducers, and wheel bearings subject to failure are located and mounted such that they can be replaced by one or two personnel working from the bridge, trolley, scissors lift, or scaffolding using an overhead maintenance crane as necessary. This is to be done by minimizing shimming and alignment of motors and gear boxes. [ALARA]

Verification: Verification is expected to be achieved through the following:

Verif. Method	Verif. By	Plan	Notes/Comments
I	ENG	Review HFH equipment design to verify the use of modular components.	Document in an evaluation/assessment. Plant Engineering will participate in the evaluation/assessment.

3.4.4.10 NOT USED

3.4.4.11 Plug Connections

Requirement: The HFH equipment and components that are remotely removable and replaceable shall use plugs that can be engaged/disengaged with remote handling equipment, for power and instrumentation instead of hard wiring. [Sections 9.1, 14.8, ORD, ROIN: 8-4349A, ROIN: 8-7842]

Basis Discussion: Plugs are used for power and instrumentation, instead of hardwiring, where practical to minimize maintenance labor time, number, and type of crafts required to perform work. This applies to equipment or components that are remotely removable and replaceable, and includes tools that may need power or instrumentation connections, such as the in-cave portable vacuum or impact wrench. The plugs are also able to be remotely manipulated. [ALARA]

Verification: Verification is expected to be achieved through the following:

Verif. Method	Verif. By	Plan	Notes/Comments
I	ENG	Review HFH equipment design to verify the use of plugs for power and instrumentation connections.	Document in an evaluation/assessment.

3.4.4.12 Remote Equipment Dimensional Records

Requirement: **[HOLD]** Systems and equipment requiring remote installation and maintenance shall have tolerances specified in their design and be as-built with sufficient precision to provide for the ability to remotely install, connect, disconnect, and reconnect all replaceable components. [Section 14.10, ORD, ROIN: 1-40075]

Basis Discussion: As-built documentation of remote equipment and permanent plant interfaces for the remote equipment provides the ability to remotely install, connect, disconnect, and reconnect all replaceable components. This dimensional records program is important to fabrication of replacement parts that are to be installed remotely. This requirement is on HOLD due to a pending ORDCN that is expected to provide more definitive criteria regarding tolerances and as-built precision to be captured in the dimensional records for remotable equipment and attachment points to support fabrication and fit-up of future replacement equipment. [24590-WTP-ATS-MGT-15-0131].

Verification: Verification is expected to be achieved through the following:

Verif. Method	Verif. By	Plan	Notes/Comments
I	ENG	Review HFH as-built drawings for remotely replaceable components to verify conformance with dimensional record requirements.	Document in an evaluation/assessment. Note: final in-plant fit-up may be required prior to finalizing dimension records (as-built drawings) for remotely replaceable components.

3.5 Crane Requirements

3.5.1 Mission and Functional / Performance Requirements (Including States/Modes)

3.5.1.1 Codes and Standards

Requirement: **[HOLD]** The filter cave crane (HFH-CRN-00002) shall be designed per Crane Manufacturers Association of America (CMAA) 70. [Section 11.8.1, BOD, ROIN: 8-8061]

Basis Discussion: This requirement is on HOLD pending resolution of condition report 24590-WTP-GCA-MGT-15-00137, for resolution of the codes and standards applicable to high integrity cranes for which no safety functions have been identified. [24590-WTP-ATS-MGT-15-0132]

Verification: Verification is expected to be achieved through the following:

Verif. Method	Verif. By	Plan	Notes/Comments
I	ENG	Review design of the filter cave crane to verify adherence to CMAA 70.	Document in an evaluation/assessment.

3.5.1.2 Lifting Capacity

Requirement: The HFH cranes shall be designed with sufficient capacity to lift the following items in the cave or crane maintenance area, in conjunction with applicable lifting beams or apparatus: [Section 11.8.3.1, BOD, ROIN: 2-43145](A.15.1, A.15.3)

- Filter cave crane:
  - CMA floor plug
  - Fully loaded filter transport rack
  - Filter cave export hatch
  - CCTV cameras
  - In-cave lighting fixtures, with light change-out tool
  - HVAC damper internal mechanisms
  - C5V, HOP, and PJV HEPA filter, in and out of filter disposal basket, with the filter grapple
  - MSM in-cave slave arms, with slave arm removal tool
  - HEPA filter housing door components (e.g., retainer and door)
  - Posting port in-cave shield door
  - In-cave window shielding

- Filter cave tool rack
- In-cave portable vacuum
- Nut runner and stand
- Impact wrench
- Impact wrench storage and transport stand
- Seat cleaning tool
- CO_2 spray lance
- Power manipulator arm change fixture
- Power manipulator wrist stand
- Power manipulator parallel jaw hand change fixture
- Decontamination station spray shield

- Maintenance crane:
  - CMA floor plug
  - Filter cave crane component modules
  - Filter cave maintenance area workbench
  - Cable reel enclosure door
  - Cable reel extraction cart

Basis Discussion: None.

Verification: Verification is expected to be achieved through the following:

Verif. Method	Verif. By	Plan	Notes/Comments
A	ENG	Provide analysis to determine heaviest required lift for each crane.	
I	ENG	Review of crane design to verify crane capacity meets or exceeds the heaviest required lift.	Recommended to include in factory acceptance tests. Document in an evaluation/assessment.

3.5.1.3 Crane Interference

Requirement: The filter cave maintenance area crane (HFH-CRN-00001) shall be designed and installed such that it does not interfere with the ability of the filter cave crane and power manipulator to carry items in and out of the crane maintenance area or to access the CMA floor plug and filter import rack. [Section 14.16, ORD, ROIN: 8-471][Section 11.8.3.1, BOD, ROIN: 2-43149]

Basis Discussion: The filter cave crane brings equipment and components, as well as moving itself, into the CMA area for maintenance (see Sections 3.4.4.1 and 3.5.1.4). The filter cave crane also transports the filter import rack to and from the CMA (see Section 3.5.1.6). In addition, either crane may be used to lift the CMA floor plug. The arrangement of the maintenance crane cannot interfere with the ability of the filter cave crane to perform the intended functions. This may be demonstrated as part of the verification by demonstration for each of the required functions.

Verification: Verification is expected to be achieved through the following:

Verif. Method	Verif. By	Plan	Notes/Comments
I	ENG	Review design to verify maintenance crane does not interfere with normal process crane operation.	

3.5.1.4 Crane Recovery

Requirement: The design shall provide means to remotely recover the filter cave crane to the crane maintenance area during any failure mode that prevents it from driving to the maintenance area under its own power. [Section 11.3.2, 11.3.2.2, 11.4.1, 11.8.3.1, BOD, ROIN: 1-41133, ROIN: 1-41134, ROIN: 1-41136, ROIN: 1-41151, ROIN: 1-41152, ROIN: 2-43151, ROIN: 1-41215][Sections 5.2, 9.1, 14.1, 14.8, 14.16, ORD, ROIN: 1-39932, ROIN: 8-4350, ROIN: 8-3584, ROIN: 8-4337, ROIN: 8-472, ROIN: 8-481] (B.1.1)

Basis Discussion: The filter cave equipment is designed and provisions are made to allow remote recovery of failed equipment to enable repair to be undertaken in the worst-case credible failure mode. This includes provision for recovery of the filter cave crane and power manipulator in the event of failure. Consideration is given to designing equipment to fail safe to allow recovery operations to be taken. [ALARA]

Verification: Verification is expected to be achieved through the following:

Verif. Method	Verif. By	Plan	Notes/Comments
I	ENG	Review design to verify means to recover the filter cave crane to the maintenance area.	Document in an evaluation/assessment.
D	SU/COM	Demonstrate recovery of the filter cave crane in accordance with 24590-WTP-PL-RACT-RT-0001.	

3.5.1.5 Ventilation Equipment Access and Replacement

Requirement: The HFH shall provide access to the C5V, HOP, and PJV HEPA filters, filter bank door components, and dampers by overhead crane and power manipulator, for filter removal, transfer of spent filters in a lidded basket to the RWH, and installation of new HEPA filters. [Section 12.5.5, 12.5.6, 12.5.8, BOD, ROIN: 1-41302, ROIN: 1-41307, ROIN: 14-1170] (A.2, A.3, A.4, A.8, A.9, A.15, A.15.2, A.18, A.19, A.20)

Basis Discussion: Using tools described in Section 3.9, the HFH filter cave crane and power manipulator provides access to the in-cave C5V, HOP, and PJV HEPA filters to facilitate filter changing. During filter change, clean HEPA filters are staged in new baskets and transferred into the filter cave, dampers are isolated, the new filters are removed from the basket, the dirty HEPA filters are removed from the filter housings, placed into the new basket and lidded for transfer to the RWH for disposal, and the clean filter is then installed in the filter housing. The dirty HEPA filters in the lidded baskets are placed in drums for transfer to RWH through the export route. [ALARA]

Verification: Verification is expected to be achieved through the following:

Verif. Method	Verif. By	Plan	Notes/Comments
I	ENG	Review of design to verify the filter cave crane and manipulator, inclusive of tools, can access all C5V, HOP and PJV filter banks in the filter cave for operation of dampers, removal/reinstallation of filter bank doors, replacement of HEPA filters, and transfer of spent filters in lidded baskets to the RWH.	Document in an evaluation/assessment.
D	SU/COM	Demonstrate ability to actuate dampers, remove and replace HEPA filters, and transfer spent filters to RWH in lidded baskets, in accordance with 24590-WTP-PL-RACT-RT-0001.	

3.5.1.6 HEPA Filter Import

Requirement: The HFH filter cave crane shall include the capability to transport the filter import rack, loaded with HEPA filters, into the filter cave with support from the maintenance crane for opening and closing the CMA floor plug and importing the loaded filter import rack into the CMA. (A.1, A.1.2, A.1.3, A.1.4, A.1.5, A.1.6, A.1.7, A.1.8)

Basis Discussion: The filter import rack is loaded with new HEPA filters in lidded baskets in the staging area below the crane maintenance area. The HFH filter cave crane and power manipulator or the maintenance crane is used to open the floor plug and lift the import rack into the crane maintenance area, and the floor plug is reinstalled. The filter cave crane and power manipulator is then used to transport the loaded filter import rack into the filter cave.

Verification: Verification is expected to be achieved through the following:

Verif. Method	Verif. By	Plan	Notes/Comments
I	ENG	Review design to verify capability to transport the filter import rack from filter staging area into the filter cave.	
D	SU/COM	Demonstrate the ability to remove and replace the filter cave crane maintenance area floor plug using the filter cave crane and using the maintenance crane.	
D	SU/COM	Demonstrate transport of filter import rack from filter staging area into the filter cave.	

3.5.1.7 Camera Retrieval

Requirement: The filter cave crane and power manipulator shall be capable of removing, retrieving, and installing the in-cave cameras. (B.2.2)

Basis Discussion: None. [ALARA]

Verification: Verification is expected to be achieved through the following:

Verif. Method	Verif. By	Plan	Notes/Comments
I	ENG	Review design to verify capability to remove and install in-cave cameras.	
D	SU/COM	Demonstrate ability to remove and install in-cave cameras in accordance with 24590-WTP-PL-RACT-RT-0001.	May be performed as part of demonstrations for Section 3.4.4.1.

3.5.1.8 Damper Internal Mechanisms

Requirement: The filter cave crane shall be capable of accessing, removing, and installing the in-cave C5V, HOP, and PJV HEPA filter bank damper internal assemblies for maintenance or replacement of the damper internal assemblies. (B.2.3)

Basis Discussion: None. [ALARA]

Verification: Verification is expected to be achieved through the following:

Verif. Method	Verif. By	Plan	Notes/Comments
I	ENG	Review design to verify capability to access, remove, and install the damper internal assemblies.	
D	SU/COM	Demonstrate ability to access, remove, and install the damper internal assemblies in accordance with 24590-WTP-PL-RACT-RT-0001.	May be performed as part of demonstrations for Section 3.4.4.1.

3.5.2 Nuclear Safety, ALARA, Environmental and Other Regulatory Requirements

3.5.2.1 Inspection and Maintenance Area

Requirement: Access areas that meet ALARA criteria and are equipped with fixed ladders or stair access and catwalks or platforms shall be provided in the crane maintenance area to enable inspection and maintenance, without unsafe interferences, of all critical crane components. [Sections 9.1, 14.16, ORD, ROIN: 8-8074, ROIN: 8-494, ROIN: 8-485][Section 11.8.3.1, BOD, ROIN: 2-43150]

Basis Discussion: Platforms and catwalks are provided in the crane maintenance area to inspect and perform maintenance operations on the HFH cranes. [ALARA]

Verification: Verification is expected to be achieved through the following:

Verif. Method	Verif. By	Plan	Notes/Comments
I	ENG	Review the crane inspection area to verify provisions are included to enable inspection and maintenance, without unsafe interferences, of all critical crane components in an area that is ALARA.	Document in an evaluation/assessment. Radiological and Plant Engineering will participate in and/or review the evaluation/assessment.

3.5.2.2 Crane Cabling

Requirement: Portions of the filter cave crane cable trough located within the crane maintenance area shall be shielded and enclosed to provide gross contamination control for contaminated crane cables. The filter cave crane cable reel housing, including guide features located between the reel housing and the cable trough, shall be shielded and enclosed to provide gross contamination control for contaminated crane cables. [Section 5.6.32, PDSA - HLW Facility, ROIN: 40-26626]

Basis Discussion: Cable reel/trough shielding and contamination control features limit worker exposure to sections of crane cable that may acquire surface contamination in-cave and re-enter the crane maintenance area as the cable is retracted onto the reel. A solid channel covered by flaps or covers that flex or move to allow normal cable motion, is considered to be an enclosed trough for the purposes of this requirement. [ALARA]

Verification: Verification is expected to be achieved through the following:

Verif. Method	Verif. By	Plan	Notes/Comments
A	ENG	Perform an analysis to determine the required shielding thicknesses of cable reel cover and trough sections located within the CMA.	
I	ENG	Review the design to verify the reel cover and cable troughs provide the required shielding and are adequately enclosed to provide gross contamination control.	Document in an evaluation/assessment.

3.5.3 System Interface Requirements

3.5.3.1 Cable Reel Enclosure Fire Protection

Requirement: The filter cave crane cable reel (HFH-MHAN-00001) shall be provided with fire sprinkler protection inside its enclosure in the crane maintenance area. [Section 4.1.3, PFHA-HLW, ROIN: 40-28273] (H.1.2)

Basis Discussion: According to the preliminary fire hazard analysis, the fire sprinkler system provided in the cable reel enclosure limits the amount of smoke generated from a cable reel fire, and in turn protects the HEPA filters from products of combustion.

Verification: Verification is expected to be achieved through the following:

Verif. Method	Verif. By	Plan	Notes/Comments
I	ENG	Review of design to verify provision of automatic sprinkler system in the filter cave crane cable reel enclosure.	

3.5.4 Other Technical, Specialty, Operations, and Maintenance Requirements

3.5.4.1 Crane Brakes

Requirement: Brakes on hoists and on all cranes' drive functions shall automatically set when the power is off. [Section 14.16, ORD, ROIN: 8-478][Section 11.8.3.1, BOD, ROIN: 2-43153]

Basis Discussion: None.

Verification: Verification is expected to be achieved through the following:

Verif. Method	Verif. By	Plan	Notes/Comments
I	ENG	Review design to verify brakes automatically set when crane power is off.	Recommend to include in factory acceptance tests.
D	SU/COM	Demonstrate that crane brakes automatically set when crane power is off.	

3.5.4.2 Crane Lighting

Requirement: Lights shall be mounted on the filter cave crane to illuminate the working area below. [Section 14.16, ORD, ROIN: 8-479][Sections 8.6.1.1, 8.6.1.3, 11.8.3.1, BOD, ROIN: 1-40822, ROIN: 1-40829, ROIN: 2-43153]

Basis Discussion: Adequate lighting for in-cave (C3, C5) areas complies with the requirements of Illuminating Engineering Society of North America (IESNA) Standard RP-7.

Verification: Verification is expected to be achieved through the following:

Verif. Method	Verif. By	Plan	Notes/Comments
I	ENG	Review design documentation to verify lights are mounted on the filter cave crane to illuminate the area below the crane(s).	
T	SU/COM	Measure illumination levels below the filter cave crane to verify that the combined crane and facility lighting complies with IESNA Standard RP-7.	

3.5.4.3 Lubrication Systems

Requirement: Cranes shall include lubrication systems that are accessible for ease of maintenance. [Section 14.16, ORD, ROIN: 8-486][Section 11.8.3.1, BOD, ROIN: 2-43153]

Basis Discussion: To provide access for maintenance, the lubrication systems on the cranes are readily accessible to personnel. The intent is to allow lubrication without requiring the disassembly of equipment and to avoid use of man-lifts, scaffolding, or other than permanently installed catwalks on work platforms. [ALARA]

Verification: Verification is expected to be achieved through the following:

Verif. Method	Verif. By	Plan	Notes/Comments
I	ENG	Review crane design to verify incorporation of accessible lubrication systems.	

3.5.4.4 Quick Connectors

Requirement: The HFH cranes modules shall have quick connectors on flying leads to allow rapid reconnection of cabling or other services. [Section 14.16, ORD, ROIN: 8-469][Section 11.8.3.1, BOD, ROIN: 2-43147]

Basis Discussion: None. [ALARA]

Verification: Verification is expected to be achieved through the following:

Verif. Method	Verif. By	Plan	Notes/Comments
I	ENG	Review crane design to verify incorporation of quick connectors.	

3.5.4.5 NOT USED

3.5.4.6 Standardized Operator Controls

Requirement: The control units for the HFH cranes and power manipulator shall be standardized with the similar mechanical handling control units facility-wide. [Section 14.16, ORD, ROIN: 8-473]

Basis Discussion: Standardized operator controls are provided as much as possible to avoid errors that might occur when moving from one crane to another. Differences to accommodate specialized crane operations (e.g., power manipulator operation) are acceptable.

Verification: Verification is expected to be achieved through the following:

Verif. Method	Verif. By	Plan	Notes/Comments
I	ENG	Review the design to verify standardized control units are provided.	Document in an evaluation/assessment.

3.5.4.7 End Effector and Tool Change-out

Requirement: The HFH shall provide the ability to remotely acquire to or remove from the filter cave crane the following items, and shall provide an in-cave stand or storage location for each item: (A.2, A.3, A.5, A.17, B.2.1, B.2.3)

- Filter grapple
- Filter seat cleaning tool
- Impact wrench
- Nut runner
- Portable vacuum

Basis Discussion: A variety of tools or end effectors, and a means for change-out and storage, are needed for the filter cave crane and power manipulator to perform the various in-cave remote operations required for HEPA filter replacement and in-cave maintenance. Section 3.9.1 stipulates the tools or end effectors required. [ALARA]

Verification: Verification is expected to be achieved through the following:

Verif. Method	Verif. By	Plan	Notes/Comments
I	ENG	Review design to verify ability to change-out the various end effectors and tools, including provision of an in-cave stand or storage location for each item.	
D	SU/COM	Demonstrate change-out of the various end effectors and tools in accordance with 24590-WTP-PL-RACT-RT-0001.	May be performed as part of demonstration of Section 3.4.4.1.

3.5.4.8 Onboard Fire Suppression

Requirement: The HFH filter cave crane/power manipulator shall be equipped with an onboard fire protection system for protection of the crane in the event of an onboard crane fire. [Appendix C 5.0, SRD, ROIN: 45-5388] (H.2)

Basis Discussion: In the tailoring of DOE-STD-1066-97, Section 14.8, *Deluge Spray Suppression Systems*, the bases given in the SRD, Appendix C 5.0, Compliance Bases, for not providing a deluge or other water addition system for the C5 HEPA filters is, in part, the provision of an onboard fire protection system for the filter cave crane and power manipulator which is noted to be the only potential combustible exposure to the filters in the filter cave.

Verification: Verification is expected to be achieved through the following:

Verif. Method	Verif. By	Plan	Notes/Comments
I	ENG	Review the design to verify provision of an onboard fire suppression system.	

3.6 Shield Door Requirements

3.6.1 Mission and Functional / Performance Requirements (Including States/Modes)

3.6.1.1 Engineered Air Gap

Requirement: The HFH horizontal and vertical maintenance area equipment shield doors (HFH-DOOR-00001 and HFH-DOOR-00002) shall be provided with an engineered air gap which, in conjunction with the facility ventilation system, is capable of maintaining a minimum perimeter airflow velocity of 200 ft/min. [Section 7.1, ORD, ROIN: 8-489][Sections 5.1.2, 11.8.3.1, 12.3.2, BOD, ROIN: 1-40438, ROIN: 1-40441, ROIN: 2-43160, ROIN: 8-15078][Sections 4.4.1, 4.4.1.1, 4.4.1.4, PDSA – HLW Facility, ROIN: 2-46201, ROIN: 1-21615A, ROIN: 1-21619][Safety Criterion 4.2-1, SRD, ROIN: 1-38663]

Basis Discussion: An engineered air gap helps control the spread of contamination and maintain the cascading airflow from areas of low contamination to areas of higher contamination. This requirement applies when the shield doors are closed. [ALARA]

Verification: Verification is expected to be achieved through the following:

Verif. Method	Verif. By	Plan	Notes/Comments
A	ENG	Perform an analysis to verify air gap value(s) necessary to achieve 200 ft/min airflow velocity around shield door perimeters.	
I	ENG	Review the door design to verify conformance to engineered air gap requirements.	
I	CON	Inspect installation to verify conformance to engineered air gap requirements.	

3.6.1.2 Shielded Personnel Access Door Sealing

Requirement: **[HOLD]** The HFH shielded personnel access door (SPAD) shall fully seal against its mating surface to maintain the C5V boundary. [Sections 4.3.9.2, 4.3.9.3, 5.6.12, PDSA – HLW Facility, ROIN: 40-11532, ROIN: 40-11533, ROIN: 40-11534, ROIN: 40-11539C][Section 5.1.2, BOD, ROIN: 1-40438, ROIN: 1-40441][Safety Criterion 4.2-1, SRD, ROIN: 1-38663]

Basis Discussion: The SPADs maintain confinement of the C5V boundary by ensuring when the doors are closed, they seal to restrict air from leaking out of the airlocks. This requirement is on "HOLD" due to discrepancies within the PDSA-HLW Facility. 24590-WTP-PIER-MGT-14-0914 documents the conflicting requirements for an engineered air gap and a full seal between mating surfaces. [24590-WTP-ATS-MGT-15-0133] [ALARA]

Verification: Verification is expected to be achieved through the following:

Verif. Method	Verif. By	Plan	Notes/Comments
I	ENG	Review of SPAD design to verify full sealing around the aperture perimeter.	
T	SU/COM	Test installation to verify full sealing around the aperture perimeter.	

3.6.2 Nuclear Safety, ALARA, Environmental and Other Regulatory Requirements

3.6.2.1 Shielding

Requirement: The HFH shield doors and through-wall devices that fill or cover a penetration through a shield wall shall provide adequate radiation shielding (including guide systems or shield blocks) to reduce personnel exposure to levels acceptable within the Radiation Protection Program. [Sections 4.3.9, 4.4.1, 4.4.1.2, 4.4.1.3, 4.4.2, 4.4.2.3, 5.6.12, PDSA - HLW Facility, ROIN: 40-11525, ROIN: 1-21614, ROIN: 14-5978, ROIN: 1-21617A, ROIN: 1-21621, ROIN: 1-21624, ROIN: 40-11539A][Section 11.8.3.1, BOD, ROIN: 2-43160].

Basis Discussion: None. [ALARA]

Verification:: Verification is expected to be achieved through the following:

Verif. Method	Verif. By	Plan	Notes/Comments
I	ENG	Review design to verify shield doors and through-wall devices conform to applicable shielding calculations and shine path analyses.	Document in an evaluation/assessment. Radiological Engineering will participate in and/or review the evaluation/assessment.

3.6.2.2 Withstand Impacts

Requirement: Maintenance area equipment shield doors, HFH-DOOR-00001 and HFH-DOOR-00002, shall withstand impacts from loaded cranes without catastrophically failing or creating a direct shine path into the crane maintenance area. [Sections 4.4.1.3, 4.4.1.4, 5.6.12, PDSA - HLW Facility, ROIN: 40-26615, ROIN: 14-7011, ROIN: 40-11539B]

Basis Discussion: The maintenance area doors may have personnel working on equipment in the maintenance area. Should a door fail catastrophically, a radiological shine path may expose workers to high doses of radiation. These doors withstand an impact from a loaded crane without failing to prevent radiological exposure to workers. [ALARA]

Verification: Verification is expected to be achieved through the following:

Verif. Method	Verif. By	Plan	Notes/Comments
A	SUP/ENG	Determine impact loads imposed on affected shield doors by loaded cranes.	
I	ENG	Review door design to verify affected doors are able to withstand crane impacts without catastrophic failure or creation of a shine path.	

3.6.2.3 Replaceable Seals

Requirement: The HFH SPAD shall have replaceable seals. [Section 4.3.1.2, 4.3.9.3, PDSA – HLW Facility, ROIN: 1-21509, ROIN: 40-11535].

Basis Discussion: The SPADs maintain confinement of the C5V boundary by ensuring, when the doors are closed, they seal to restrict air from leaking out of the airlocks. The seals on SPADs may wear out and are replaceable. [ALARA]

Verification:: Verification is expected to be achieved through the following:

Verif. Method	Verif. By	Plan	Notes/Comments
I	ENG	Review the design to verify incorporation of replaceable seals.	

3.6.2.4 Shield Door Locking Devices

Requirement: The maintenance area equipment shield doors and the SPAD shall include provisions for physical locks or electrical lock-out, to be applied to electrical power sources, controls, or mechanical locking devices. [Sections 4.3.9.2, 5.6.12, PDSA – HLW Facility, ROIN: 40-11533, ROIN: 40-26625]

Basis Discussion: Locks provide a physical barrier to prevent unauthorized or inadvertent entry into areas of potential high radiation. The lock can be applied to either an electrical or a mechanical isolation point. Padlocks and hasps are inappropriate for equipment shield doors. [ALARA]

Verification: Verification is expected to be achieved through the following:

Verif. Method	Verif. By	Plan	Notes/Comments
I	ENG	Review the design to verify incorporation of physical locking devices, power or control locks, or blocking devices.	Document review in an evaluation/assessment. Plant Engineering will participate in or review evaluation/assessment.

3.6.2.5 Mounting of Shielded Personnel Access Door

Requirement: The structural mounting components of the SPAD (HFH-DOOR-00004) are designed in accordance with DOE-STD-1020-94 and American National Standards Institute/ American Institute of Steel Construction (ANSI/AISC) N690. [Section 4.3.9.4, PDSA - HLW Facility, ROIN: 40-11536] [Safety Criterion 4.1-3, SRD, ROIN: 1-38653]

Basis Discussion: None.

Verification: Verification is expected to be achieved through the following:

Verif. Method	Verif. By	Plan	Notes/Comments
I	ENG	Review the design to verify structural analysis conforms with DOE-STD-1020-94, and ANSI/AISC N690 and that the design conforms with the analysis.	

3.6.2.6 Mounting of Equipment Shield Doors

Requirement: The structural mounting components of the maintenance area equipment shield doors (HFH-DOOR-00001, and HFH-DOOR-00002) are designed in accordance with DOE-STD-1020-94, ANSI/AISC N690, and AISC M016, as applicable. [Section 4.4.1.4, PDSA - HLW Facility, ROIN: 45-31547][Safety Criterion 4.1-3, SRD, ROIN: 1-38653]

Basis Discussion: Typically, ANSI/AISC N690 is applied to SC-I and SC-II SSCs and AISC M016 is applied to SC-III and SC-IV SSCs. DOE-STD-1020-94 is generally applicable to these SSCs.

Verification: Verification is expected to be achieved through the following:

Verif. Method	Verif. By	Plan	Notes/Comments
I	ENG	Review the design to verify structural analysis conforms with DOE-STD-1020-94, ANSI/AISC N690, and AISC M016, as applicable, and that the design conforms with the analysis.	

3.6.3 System Interface Requirements

None.

3.6.4 Other Technical, Specialty, Operations and Maintenance Requirements

3.6.4.1 NOT USED

3.6.4.2 NOT USED

3.6.4.3 Shield Door Recovery

Requirement: The maintenance area equipment shield doors (HFH-DOOR-00001 and HFH-DOOR-00002) shall include the capability for remote recovery to close the door in the event of failure. [Section 11.8.3.1, BOD, ROIN: 2-43162][Sections 5.2, 9.1, ORD, ROIN: 1-39932, ROIN: 8-4350](B.1.5)

Basis Discussion: None. [ALARA]

Verification: Verification is expected to be achieved through the following:

Verif. Method	Verif. By	Plan	Notes/Comments
I	ENG	Review the design to verify the capability to be remotely recovered.	
D	SU/COM	Demonstrate recovery capability of the shield doors in accordance with 24590-WTP-PL-RACT-RT-0001.	

3.6.4.4 Electrical Device Location

Requirement: Electrical or control devices shall be fitted adjacent to and not on shield door panels. [Section 11.8.3.1, BOD, ROIN: 2-43161]

Basis Discussion: None.

Verification: Verification is expected to be achieved through the following:

Verif. Method	Verif. By	Plan	Notes/Comments
I	ENG	Review the design to verify electrical and control devices are not located on the shield door panels.	

3.6.4.5 Fail in Place

Requirement: The maintenance area equipment shield doors (HFH-DOOR-00001 and HFH-DOOR-00002) shall fail safe by remaining in place on loss of power or control signals. [Sections 5.2, 14.8, 14.16, ORD, ROIN: 1-39932, ROIN: 8-4337, ROIN: 8-481][Section 11.4.1, BOD, ROIN: 1-41151, ROIN: 1-41152]

Basis Discussion: None.

Verification: Verification is expected to be achieved through the following:

Verif. Method	Verif. By	Plan	Notes/Comments
I	ENG	Review of design to verify doors remain in place on loss of power.	Document in an evaluation/assessment.
D	SUP/SU/ COM	Demonstrate doors remain in place on loss of power.	

3.6.4.6 Shield Door Ease of Decontamination

Requirement: Shield doors shall be designed for ease of decontamination. [Section 7.1, ORD, ROIN: 8-488]

Basis Discussion: Door decontamination is performed using the same methods and agents used on the surrounding room. [ALARA]

Verification: Verification is expected to be achieved through the following:

Verif. Method	Verif. By	Plan	Notes/Comments
I	ENG	Review shield door design to verify materials or coatings applied to shield door panels support ease of decontamination.	Document in an evaluation/assessment or ALARA design review. Radiological Engineering will participate in the assessment/evaluation.

3.7 Posting Port Requirements

3.7.1 Mission and Functional / Performance Requirements (Including States/Modes)

3.7.1.1 Import and Export Swabs

Requirement: The posting port shall provide the capability to import and export swabs. (A.12, A.12.1, A.12.2, A.12.3)

Basis Discussion: None.

Verification: Verification is expected to be achieved through the following:

Verif. Method	Verif. By	Plan	Notes/Comments
I	ENG	Review the design to verify ability to import and export swabs through the posting port.	
D	SU/COM	Demonstrate import and export of swabs through the posting port.	

3.7.1.2 Measuring Contamination Levels

Requirement: The HFH glovebox shall provide the capability to import and use portable instruments or probes within the glovebox, including those used to measure the contamination levels of swabs or components that have been brought into the glovebox. (A.12.5)

Basis Discussion: Preliminary or go/no-go contamination measurements may be taken inside the glovebox using small portable instruments.

Verification: Verification is expected to be achieved through the following:

Verif. Method	Verif. By	Plan	Notes/Comments
I	ENG	Review the design to verify the capability to import and use portable instruments within the glovebox.	
D	SU/COM	Demonstrate the ability to import and use portable instruments within the glovebox.	

3.7.1.3 Failed Radiation Inspection

Requirement: The posting port and glovebox shall include the capability to return a swab or component to the filter cave if radiation is detected in excess of limits. (A.12.2, A.12.5)

Basis Discussion: Swabs and components are measured for radiation levels after being transferred into the glovebox to confirm radiation levels are acceptable before removing items from the glovebox. If radiation levels are too high, components or swabs are returned to the filter cave for further decontamination or disposition by Operations. [ALARA]

Verification: Verification is expected to be achieved through the following:

Verif. Method	Verif. By	Plan	Notes/Comments
I	ENG	Review the design to verify the capability to transfer items back to the filter cave from the posting port/glovebox.	

3.7.2 Nuclear Safety, ALARA, Environmental, and Other Regulatory Requirements

None.

3.7.3 System Interface Requirements

None.

3.7.4 Other Technical, Specialty, Operations and Maintenance Requirements

3.7.4.1 Glovebox Pressure

Requirement: The glovebox (in conjunction with normal operation of the facility ventilation systems) shall be capable of maintaining a negative pressure relative to its room location. [Section 14.15, ORD, ROIN: 40-9971][Safety Criterion 4.2-1, SRD, ROIN: 1-38663][Section 5.1.2, BOD, ROIN: 1-40438]

Basis Discussion: Air is drawn through the glovebox and into the filter cave by the facility ventilation system. The glovebox regulates this airflow to maintain a negative pressure in the glovebox relative to the room in which it resides, including while the glovebox airlock and posting port doors are open in any of the configurations allowed by the local control station and interlocks. [ALARA]

Verification: Verification is expected to be achieved through the following:

Verif. Method	Verif. By	Plan	Notes/Comments
I	ENG	Review the design to verify the ability to maintain a negative internal pressure, relative to the surrounding room, through regulation of ventilation air flowing through the glovebox and into the cell or cave.	
T	SU/COM	Verify that, in conjunction with normal operation of the facility ventilation systems, the glovebox can maintain a negative pressure relative to the room it resides in.	

3.7.4.2 Glovebox Ember Screens

Requirement: Gloveboxes shall be provided with ember screens. [Section 4.1.10, PFHA-HLW, ROIN: 40-28632](H.1.1)

Basis Discussion: None.

Verification: Verification is expected to be achieved through the following:

Verif. Method	Verif. By	Plan	Notes/Comments
I	ENG	Review of design to verify provision of ember screens in the HFH glovebox.	Documented in an evaluation/assessment.

3.7.4.3 Glovebox Construction

Requirement: There shall be no sharp edges within a glovebox. [Section 14.15, ORD, ROIN: 40-9968]

Basis Discussion: Elimination of sharp edges lowers the risk of a torn glove. [ALARA]

Verification: Verification is expected to be achieved through the following:

Verif. Method	Verif. By	Plan	Notes/Comments
I	ENG	Review the design of the glovebox to verify that the design does not contain any sharp edges.	Document in an evaluation/assessment.

3.7.4.4 Glovebox Materials

Requirement: The glovebox shall not include braided metal hosing, glass, or plastic without approved justification. [Section 14.15, ORD, ROIN: 40-9969]

Basis Discussion: Eliminating braided metal hoses and plastic lowers the potential for contamination accumulation and facilitates decontamination. Eliminating nonreinforced glass reduces the potential for glass breakage and glove tears. [ALARA]

Verification: Verification is expected to be achieved through the following:

Verif. Method	Verif. By	Plan	Notes/Comments
I	ENG	Review the design to verify that braided metal hosing, glass, or plastic have not been specified in the glovebox design without approved justification.	Document in an evaluation/assessment.

3.7.4.5 Prevent Release

Requirement: The air inlet to the glovebox shall be designed to preclude release of contamination to the surrounding room in the event of a loss of negative pressure or a pressure reversal in the glovebox. [Section 5.1.2, BOD, ROIN: 1-40438]

Basis Discussion: Air is drawn through the glovebox and into the filter cave by the facility ventilation system. The glovebox may contain an air inlet to regulate this airflow to maintain a negative pressure in the glovebox, relative to the room in which it resides (see also Section 3.7.4.1). This air inlet is designed to preclude a release

of contamination to the surrounding room in the event of a loss of negative pressure or a pressure reversal in the glovebox. [ALARA]

Verification: Verification is expected to be achieved through the following:

Verif. Method	Verif. By	Plan	Notes/Comments
I	ENG	Review the design to verify feature(s) are provided to preclude release of contamination to surrounding room on loss of negative pressure or pressure reversal.	Document in an evaluation/assessment.

3.7.4.6 Glovebox Fire Protection

Requirement: **[HOLD]** Gloveboxes shall be provided with automatic sprinkler systems in the posting port and the glovebox that drain to the filter cave upon actuation. [Section 4.1.10, PFHA-HLW, ROIN: 40-28632](H.1.1)

Basis Discussion: The gloveboxes are designed in accordance with DOE-STD-1066-97, Section 15, and National Fire Protection Association (NFPA) 801, as tailored in Appendix C of the SRD, which require the gloveboxes to have automatic sprinklers and the means for draining. Draining to the filter cave, in-cave, is accomplished by way of the vent/drain piping from the glovebox to the filter cave that is provided to ensure contamination is cascaded from an area of lower to higher contamination potential. This requirement is on "HOLD" for resolution of the drainage because there is no means in the filter cave to collect or remove the water from a sprinkler actuation (see 24590-WTP-PIER-MGT-14-1274). Also, the PFHA-HLW indicates that automatic sprinkler protection is provided in the posting port and the glovebox, however, the corrective action for 24590-WTP-PIER-MGT-14-1322 questions the validity of—includes evaluating the validity of—the description in the PFHA-HLW related to installation of sprinklers in gloveboxes and posting ports. As the PFHA-HLW is the source document for this requirement, this requirement is on "HOLD" for resolution of 24590-WTP-PIER-MGT-14-1322. [24590-WTP-ATS-MGT-15-0134]

Verification: Verification is expected to be achieved through the following:

Verif. Method	Verif. By	Plan	Notes/Comments
I	ENG	Review of design to verify provision of automatic sprinkler system in the HFH glovebox and posting port.	Documented in an evaluation/assessment.

3.7.4.7 Glovebox Maintainable Items

Requirement: All of the gloveboxes maintainable items shall be accessible. [Section 14.15, ORD, ROIN: 40-9966]

Basis discussion: All maintainable items on the glovebox are accessible. This includes items inside of the glovebox.

Verification: Verification is expected to be achieved through:

Verif. Method	Verif. By	Plan	Notes/Comments
I	ENG	Review the glovebox design to verify access to all maintainable items.	

3.7.4.8 Operator Design

Requirement: The HFH glovebox shall be designed and positioned for typical operator size and strength. [Section 14.15, ORD, ROIN: 40-9967]

Basis discussion: The glovebox is designed and positioned such that a typical operator can perform the required operations and reach all required equipment inside the glovebox. Design in accordance with human factors provisions of AGS-G001, Guideline for Gloveboxes, meets the requirement to design for a "typical" operator.

Verification: Verification is expected to be achieved through:

Verif. Method	Verif. By	Plan	Notes/Comments
I	ENG	Inspect the design to verify glove ports allow an operator of typical size and strength to perform all required operations within the limited space of the glovebox.	

3.8 Master Slave Manipulator Requirements

3.8.1 Mission and Functional / Performance Requirements (Including States/Modes)

3.8.1.1 Import and Export Swabs

Requirement: The MSM shall be capable of transferring swabs and other items to and from the posting port transport tray and handle swabs for swabbing operations. (A.12.2, A.12.4, A.13, A.13.2, A.13.3, A.13.4).

Basis Discussion: None.

Verification: Verification is expected to be achieved through the following:

Verif. Method	Verif. By	Plan	Notes/Comments
D	SU/COM	Demonstrate transfer of swabs to and from the posting port transport tray by the MSM, and handling of swab for swabbing operations.	

3.8.2 Nuclear Safety, ALARA, Environmental and Other Regulatory Requirements

None.

3.8.3 System Interface Requirements

None.

3.8.4 Other Technical, Specialty, Operations and Maintenance Requirements

3.8.4.1 Master Slave Manipulator Removal

Requirement: The MSM master arm and through wall assembly shall be removable from the in-cave wall to the operating gallery using a special removal cart or monorail. [Section 9.2, ORD, ROIN: 8-9095A, ROIN: 8-9095B] (B.1.2)

Basis Discussion: The MSM is designed to allow for removal and transport to decontamination and maintenance areas and placement in a storage area for future repair and replacement.

Verification: Verification is expected to be achieved through the following:

Verif. Method	Verif. By	Plan	Notes/Comments
I	ENG	Review the design to verify the out-cave and through wall portions of the MSMs can be removed to the operating gallery.	
D	SU/COM	Demonstrate removal and transport of the MSMs.	May be performed as part of demonstrations for Section 3.4.4.1

3.9 Tool Requirements

3.9.1 Mission and Functional / Performance Requirements (Including States/Modes)

3.9.1.1 HEPA Filter Handling

Requirement: The system shall provide a filter grapple hoisted and operated by the filter cave crane, capable of remotely acquiring, carrying, and releasing a standard C5V/HOP/PJV HEPA filter. The filter grapple shall have the following characteristics: (A.5, A.6, A.7, A.8, A.9, A.10, A.11, A.13, A.13.1, A.15, A.15.2, A.18, A.19)

- The filter grapple shall be designed such that grapple-to-filter contact occurs only at the top, inner, or bottom surfaces of the filter inlet flange
- The filter grapple shall be able to acquire and deposit a HEPA filter from or to an in-cave filter housing and an unlidded filter basket
- The filter grapple shall prevent inadvertent release by incorporating an indexing feature that requires two fully lowered set downs to disengage the grapple
- The filter grapple shall provide visual engaged/disengaged status indication
- The filter grapple shall also have the ability to engage and adequate lifting capacity to lift and transport a filled and lidded filter basket and a filter bank door.

Basis Discussion: None. [ALARA]

Verification: Verification is expected to be achieved through the following:

Verif. Method	Verif. By	Plan	Notes/Comments
I	ENG	Review the design to verify the ability to handle HEPA filters, filter disposal baskets, basket lids, and filter bank doors.	
D	SU/COM	Demonstrate the ability to handle HEPA filters, filter disposal baskets, basket lids, and filter bank doors.	May be performed as part of demonstrations for Section 3.5.1.5.

3.9.1.2 Damper Actuation

Requirement: The system shall provide a nut runner or other actuator capable of remotely actuating the C5V, HOP, and PJV HEPA filter bank dampers. The tool shall be designed to be transported, powered, and operated by the filter cave crane. (A.2, A.3)

Basis Discussion: None. [ALARA]

Verification: Verification is expected to be achieved through the following:

Verif. Method	Verif. By	Plan	Notes/Comments
I	ENG	Review the design to verify ability to actuate the C5V, HOP, and PJV HEPA filter bank dampers.	
D	SU/COM	Demonstrate the ability to actuate the C5V, HOP, and PJV HEPA filter bank dampers, including viewing of damper position.	The viewing of this activity is tied to provision of windows and cameras for viewing of remote operations in Section 3.4.3.1.

3.9.1.3 In-cave Vacuum

Requirement: The system shall provide a portable vacuum to aid in decontamination and removal of HEPA filter seat debris. The vacuum shall be designed to be transported, powered, and operated by the filter cave crane. If the vacuum is treated as a non-maintained or disposable item, it shall be sized to fit inside a lidded filter basket for disposal. (A.14)

Basis Discussion: None. [ALARA]

Verification: Verification is expected to be achieved through the following:

Verif. Method	Verif. By	Plan	Notes/Comments
I	ENG	Review the design to verify ability to handle and operate portable vacuum, including the ability to remove filter seat debris.	
D	SU/COM	Demonstrate ability to handle and operate portable vacuum, including the ability to remove filter seat debris.	May be performed in conjunction with demonstration for Section 3.9.1.4.
D	SU/COM	Demonstrate ability to dispose of the vacuum.	

3.9.1.4 Filter Seat Cleaning

Requirement: The HFH shall provide a tool or device capable of remotely removing filter seal deposits from the sealing surfaces of the in-cave filter banks. The tool or device shall be designed to be transported by the filter cave crane and be actuated by a crane-borne nut runner or other crane-borne actuator, or be otherwise powered and operated by the filter cave crane. (A.17)

Basis Discussion: None. [ALARA]

Verification: Verification is expected to be achieved through the following:

Verif. Method	Verif. By	Plan	Notes/Comments
I	ENG	Review the design to verify the ability to operate the filter seat cleaning tool.	
D	SU/COM	Demonstrate operation of the filter seat cleaning tool.	

3.9.1.5 Light Change-out Tool

Requirement: The system shall provide the ability to remotely remove, transport, and install in-cave lights, including the ability to engage and disengage electrical plugs and utilize a crane-borne light change-out tool, as necessary. (B.2.1)

Basis Discussion: None. [ALARA]

Verification: Verification is expected to be achieved through the following:

Verif. Method	Verif. By	Plan	Notes/Comments
I	ENG	Review the design to verify ability to remove and install in-cave lights.	
D	SU/COM	Demonstrate ability to remove and install in-cave lights in accordance with 24590-WTP-PL-RACT-RT-0001.	

3.9.1.6 Impact Wrench

Requirement: The system shall provide an impact wrench capable of remotely disengaging and re-engaging damper housing mounting fasteners for access to the damper internal assemblies. The impact wrench shall be designed to be transported, powered, and operated by the filter cave crane. (B.2.3)

Basis Discussion: None. [ALARA]

Verification: Verification is expected to be achieved through the following:

Verif. Method	Verif. By	Plan	Notes/Comments
I	ENG	Review the design to verify ability to remotely disengage/engage the damper housing nuts to access the damper internal assemblies.	
D	SU/COM	Demonstrate ability to engage the damper housing nuts to access the damper internal assemblies.	May be performed as part of demonstrations for Sections 3.5.1.8 and 3.4.4.1.

3.9.1.7 Filter Bank Door Seal Replacement

Requirement: The HFH design shall include the capability to remotely replace the HEPA filter bank door seals. (B.2.4)

Basis Discussion: None. [ALARA]

Verification: Verification is expected to be achieved through the following:

Verif. Method	Verif. By	Plan	Notes/Comments
I	ENG	Review the design to verify the ability to remotely replace the HEPA filter bank door seals.	
D	SU/COM	Demonstrate capability to replace the HEPA filter bank door seals in accordance with 24590-WTP-PL-RACT-RT-0001.	

3.9.1.8 Filter Basket Lid Removal and Reinstallation

Requirement: The HFH shall include the capability to remotely remove and reinstall a filter basket lid. (A.6, A.11)

Basis Discussion: None. [ALARA]

Verification: Verification is expected to be achieved through the following:

Verif. Method	Verif. By	Plan	Notes/Comments
I	ENG	Review the design to verify the ability to remotely remove and reinstall a filter basket lid.	
D	SU/COM	Demonstrate capability to remotely remove and reinstall a filter basket lid in accordance with 24590-WTP-PL-RACT-RT-0001.	

3.9.2 Nuclear Safety, ALARA, Environmental and Other Regulatory Requirements

None.

3.9.3 System Interface Requirements

None.

3.9.4 Other Technical, Specialty, Operations and Maintenance Requirements

3.9.4.1 Grapple Recovery

Requirement: The HFH design shall include the capability to manually disengage the filter grapple from a filter, filter basket lid, or filter bank door using an in-cave MSM. Adequate operator viewing capability and a suitable support and storage point shall be provided within the working range of the MSM. (B.1.6)

Basis Discussion: In the event that the grapple does not disengage from a hoisted item, an in-cave MSM can be used to disengage the grapple from the item. Viewing capability and a support point are available within reach of the MSM. [ALARA]

Verification: Verification is expected to be achieved through:

Verif. Method	Verif. By	Plan	Notes/Comments
I	ENG	Review the HFH design to verify capability to use MSM to manually disengage the grapple from a filter, filter basket lid, or filter bank door.	
D	SU/COM	Demonstrate the capability to use a MSM to manually disengage the grapple from a filter, filter basket lid, or filter bank door.	

3.10 Monitoring and Controls Requirements

3.10.1 Mission and Functional / Performance Requirements (Including States/Modes)

3.10.1.1 In-Cave Crane Control

Requirement: The filter cave crane and power manipulator (HFH-CRN-00002) shall be designed for control by manual mode at the facility control room (FCR) or at the operator control stations at the cave face, through the MHJ, and with the ability to override for local control by radio controller. [Section 11.5, ORD, ROIN: 1-39993, ROIN: 8-9097, ROIN: 8-9098] [Sections 7.3.5.2, 7.3.5.3, BOD, ROIN: 1-40655, ROIN: 1-40658]

Basis Discussion: The filter cave crane, hoist, and power manipulator is operated through the MHJ at the FCR or the operator control stations at the cave face, but can also be operated in local mode. The filter cave crane is required to be remotely operated, so the direct control interface for local mode operation is by radio.

Verification: Verification is expected to be achieved through the following:

Verif. Method	Verif. By	Plan	Notes/Comments
I	ENG	Review the design to verify the filter cave crane and power manipulator can be operated at the FCR, at the operator control stations, or in local mode by radio controller.	

3.10.1.2 Manual Control

Requirement: The HFH cranes (HFH-CRN-00001 and HFH-CRN-00002) shall be designed for manual operator control only, with no automated programming. [Sections 14.1, 14.16, ORD, ROIN: 8-3586, ROIN: 8-487] [Sections 7.3.5.2, 7.3.5.3, BOD, ROIN: 1-40655, ROIN: 1-40659]

Basis Discussion: The filter cave cranes lack an automatic control mode, and can only be operated directly in manual mode. Mechanical handling equipment is designed with automation only if required for safety or to prevent equipment damage if operator response cannot be relied on.

Verification: Verification is expected to be achieved through the following:

Verif. Method	Verif. By	Plan	Notes/Comments
I	ENG	Review the design to verify the cranes operate in manual mode only, with no automated operations.	

3.10.1.3 MHJ – Mechanical Handling Monitoring and Control

Requirement: The following HFH mechanical handling equipment shall be controlled and monitored through the MHJ: [Section 9.6.2, BOD, ROIN: 1-41007] (F.1.1, F.1.2, F.1.3)

- Vertical and horizontal shield doors
- Filter cave crane/power manipulator
- Filter cave crane cable reeling system

Basis Discussion: Listed equipment is located in areas that are not normally accessible to personnel and are operated through the MHJ. The MHJ interfaces for control of equipment may exist in controls rooms, at a cave face, or in an accessible area near inaccessible equipment.

The MHJ provides the following functions:

- Sequence control of discrete mechanical handling equipment
- Device interlocks (when not completely self-contained within a packaged equipment)
- Control of process functions integral to the mechanical handling system
- Control of package-supplied equipment

Equipment in operation areas or corridors, such as the posting port and glovebox, are normally accessible to personnel and are operated locally, with no connections to the MHJ.

Verification: Verification is expected to be achieved through the following:

Verif. Method	Verif. By	Plan	Notes/Comments
I	ENG	Review the design to verify the listed HFH equipment can be remotely monitored and controlled by the MHJ.	Document in an evaluation/assessment.

3.10.1.4 Nonsafety Monitoring and Automatic Control

3.10.1.4.1 Heating, Ventilation, and Air-Conditioning Support Interlocks

Requirement: Nonsafety interlocks shall be provided to prevent the following doors from being open simultaneously: [Sections 7.3.4, 12.4.4, BOD, ROIN: 1-40647, ROIN: 1-41279] (A.12.3)

- Posting port in-cave shield door and posting port out-cave shield door
- Glovebox outer airlock door and glovebox inner airlock door

Basis Discussion: To ensure the proper operation of facility HVAC systems achieving negative pressure to provide cascade airflow from areas with low contamination potential to areas with high contamination potential, certain doors are prevented by interlocks from opening simultaneously. Interlock functionality may be accomplished by hardware, software, or a combination of both. [ALARA]

Verification: Verification is expected to be achieved through the following:

Verif. Method	Verif. By	Plan	Notes/Comments
I	ENG	Review of design to verify interlocks are provided for the listed doors.	
D	SU/COM	Demonstrate the operability of interlocks for the listed doors.	

3.10.1.4.2 Maintenance Area Horizontal Shield Door Interlocks

Requirement: Nonsafety interlocks shall be provided to prevent the opening or closing of the filter cave crane maintenance area horizontal shield door unless the vertical shield door is in the closed position. [Section 7.3.4, BOD, ROIN: 1-40647] (F.1.4)

Basis Discussion: To ensure correct operation of the filter cave crane maintenance area shield doors, and to prevent damage to the facility or the shield doors themselves, interlocks prevent operation of the horizontal door until the vertical door is closed. The vertical door has a guide rail located at the bottom of the door to provide

restraint and guidance of the horizontal door. If the horizontal door is not guided, it may become misaligned and damage itself or other facility features in its path. Interlock functionality may be accomplished by hardware, software, or a combination of both.

Verification: Verification is expected to be achieved through the following:

Verif. Method	Verif. By	Plan	Notes/Comments
I	ENG	Review of design to verify interlocks are provided to prevent the opening or closing of the filter cave crane maintenance area horizontal shield door unless the vertical shield door is in the closed position.	
D	SU/COM	Demonstrate the operability of the horizontal shield door interlocks.	

3.10.1.4.3 Maintenance Area Vertical Shield Door Interlocks

Requirement: Nonsafety interlocks shall be provided to prevent the opening or closing of the filter cave crane maintenance area vertical shield door unless the horizontal shield door is in the open position. [Section 7.3.4, BOD, ROIN: 1-40647] (F.1.4)

Basis Discussion: To ensure correct operation of the filter cave crane maintenance area shield doors, and to prevent damage to the facility or the shield doors themselves, interlocks prevent operation of the vertical door until the horizontal door is open. The vertical door has a guide rail located at the bottom of the door to provide restraint and guidance of the horizontal door. If the vertical door is closed while the horizontal door is closed, damage would occur to this guide system. Interlock functionality may be accomplished by hardware, software, or a combination of both.

Verification: Verification is expected to be achieved through the following:

Verif. Method	Verif. By	Plan	Notes/Comments
I	ENG	Review of design to verify interlocks are provided to prevent the opening or closing of the filter cave crane maintenance area vertical shield door unless the horizontal shield door is in the open position.	
D	SU/COM	Demonstrate the operability of the vertical shield door interlocks.	

3.10.1.4.4 Filter Cave Crane Interlocks

Requirement: Nonsafety interlocks shall be provided to prevent the filter cave crane from moving to and from the crane maintenance area until the crane is centered in front of the open shield doors and the mast and hoist hook are raised. [Section 7.3.4, BOD, ROIN: 1-40647] (F.1.4)

Basis Discussion: Interlocks are needed to prevent damage to the crane or shield doors when the filter cave crane is moved to or from the crane maintenance area. Interlock functionality may be accomplished by hardware, software, or a combination of both.

Verification: Verification is expected to be achieved through the following:

Verif. Method	Verif. By	Plan	Notes/Comments
I	ENG	Review of design to verify interlocks are provided to prevent the movement of the filter cave crane to and from the crane maintenance area until the crane is centered and raised in front of open shield doors.	
D	SU/COM	Demonstrate the operability of the filter cave crane interlocks.	

3.10.1.4.5 NOT USED

3.10.1.4.6 Defense in Depth Interlocks

Requirement: The following nonsafety interlocks shall be provided as defense-in-depth measures for worker safety protection from direct shine from either in the cave or from a source in the posting port: [Section 7.3.4, BOD, ROIN: 1-40647][Sections 4.4.22.2, 4.4.22.3, PDSA - HLW Facility, ROIN: 45-32017, ROIN: 45-32021, ROIN: 45-32022, ROIN: 45-32041, ROIN: 45-32042] (A.12.1)

- Door-to-door interlock between the in-cave and out-cave shield doors of the posting port
- Gamma detection interlock to posting port out-cave shield door to prevent the posting port out-cave shield door from opening when a high radiation source is present in the posting port

Basis Discussion: Exposure from opening an out-cave shield door of a posting port has the potential to result in moderate consequences to the worker from direct radiation shine from either in the cave or from in the posting port. These defense-in-depth interlocks provide the required worker safety protection help to prevent exposure to workers from direct radiation shine. [ALARA]

Verification: Verification is expected to be achieved through the following:

Verif. Method	Verif. By	Plan	Notes/Comments
I	ENG	Review of design to verify interlocks are provided for the listed equipment.	
D	SU/COM	Demonstrate the operability of interlocks for the listed equipment.	

3.10.1.5 Off-Board Logics

Requirement: The filter cave crane and power manipulator shall have no onboard logic, and all power and signal cables shall be marshalled offboard. [Section 14.16, ORD, ROIN: 8-470]

Basis Discussion: None.

Verification: Verification is expected to be achieved through the following:

Verif. Method	Verif. By	Plan	Notes/Comments
I	ENG	Review of filter cave crane and power manipulator design to verify power and signal cables are marshalled off the crane, and devices that execute crane control logic are located off the crane.	Document in an evaluation/assessment.

3.10.1.6 Local/Maintenance Mode

Requirement: Equipment operated under MHJ control shall have a local/maintenance mode that allows direct actuation of the equipment at the local control panel, disregards MHJ commands and interlocks, maintains independent protection interlocks, and provides a local/remote status signal to the MHJ: [Section 11.10, 11.12.3.6, ORD, ROIN: 8-6071, ROIN: 8-6072, ROIN: 8-6073, ROIN: 1-40012][Section 7.3.5.3, BOD, ROIN: 1-40658]

- Filter Cave Crane (HFH-CRN-00002)
- Maintenance area equipment shield doors (HFH-DOOR-00001 and HFH-DOOR-00002)

Basis Discussion: Local/maintenance mode allows equipment to be operated for maintenance and diagnostic purposes. Disregarding MHJ commands protects personnel and equipment from remotely-initiated operation. Independent protection interlocks, which prevent equipment damage from incorrect operation, include but are not limited to the following:

- End stop interlocks that prevent over travel
- Over speed interlocks
- Over or under voltage relays
- Over temperature switches
- Variable or adjustable speed drive fault relays

Verification: Verification is expected to be achieved through the following:

Verif. Method	Verif. By	Plan	Notes/Comments
I	ENG	Review the equipment's local control panel* design to verify required local/maintenance mode features and functions are provided.	*Where motor starters are located within a WTP motor control center, the motor control center functions as the local control panel.
D	SU/COM	Demonstrate the operability of local/maintenance mode features and functions during operation from the local control panels.	

3.10.1.7 Glovebox Pressure Indication

Requirement: Differential pressure indication shall be mounted to the glovebox to provide indication of the glovebox internal pressure relative to the room in which it resides. [Section 14.15, ORD, ROIN: 40-9971]

Basis Discussion: Air is drawn through the glovebox and into the adjacent cave or cell by the facility ventilation system. The glovebox regulates this airflow to maintain a negative pressure relative to the room in which it resides. See also Section 3.7.4.1. [ALARA]

Verification: Verification is expected to be achieved through:

Verif. Method	Verif. By	Plan	Notes/Comments
I	ENG	Review the design to verify provision of differential pressure indication.	

3.10.1.8 Sequencing

Requirement: The maintenance area equipment shield doors (HFH-DOOR-00001 and HFH-DOOR-00002) shall use sequence control by the MHJ for opening and closing the shield doors in normal operating mode. [Section 11.12.3, ORD, ROIN: 1-40006](F.1.2)

Basis Discussion: Sequence control from the MHJ includes opening and closing the horizontal shield door and opening and closing the shield door pair (horizontal and vertical shield doors) in the appropriate sequence for proper mechanical sequencing to avoid equipment damage.

Verification: Verification is expected to be achieved through the following:

Verif. Method	Verif. By	Plan	Notes/Comments
I	ENG	Review of HFH design to verify control sequences are provided by the MHJ.	Document in an evaluation/assessment.
D	SU/COM	Demonstrate sequence control of the maintenance area equipment shield doors.	

3.10.1.9 Independent Protection Interlocks

Requirement: Local control stations for the following equipment shall include independent protection interlocks: [Section 11.10, ORD, ROIN: 8-6073]

- Filter Cave Crane (HFH-CRN-00002)
- Maintenance Crane (HFH-CRN-00001)
- Maintenance area equipment shield doors (HFH-DOOR-00001 and HFH-DOOR-00002)
- Posting Port (HFH-TWDVC-00003)

Basis Discussion: The listed equipment can be operated at local control points. To prevent damage from incorrect operation, device failure, or other undesired conditions, the local control station has independent protection interlocks to prevent damage to the equipment and instruments in the control station. Independent protection interlocks include, but are not limited to the following:

- End stop interlocks that prevent over travel
- Over speed interlocks
- Over or under voltage relays
- Over temperature switches
- Variable or adjustable speed drive fault relays
- Position interlocks that prevent equipment interferences

Verification: Verification is expected to be achieved through:

Verif. Method	Verif. By	Plan	Notes/Comments
I	ENG	Review the equipment's local control panel* design to verify incorporation of independent protection interlocks.	*Where motor starters are located within a WTP motor control center, the motor control center functions as the local control panel.
D	SU/COM	Demonstrate the operability of the independent protection interlocks during operation from the local control panels.	

3.10.2 Nuclear Safety, ALARA, Environmental and Other Regulatory Requirements

None.

3.10.3 System Interface Requirements

None.

3.10.4 Other Technical, Specialty, Operations and Maintenance Requirements

3.10.4.1 Accessibility for Calibration, Testing, and Inspection

Requirement: The HFH design shall provide the capability to access and perform remote (in-cave) or direct (out-cave) calibration, periodic functional testing, removal, replacement, and inspections of equipment and components while the plant is in normal operation. [Sections 8.1.2, 9.12, BOD, ROIN: 1-40729, ROIN: 1-41030]

Basis Discussion: None. [ALARA]

Verification: Verification is expected to be achieved through the following:

Verif. Method	Verif. By	Plan	Notes/Comments
I	ENG	Review design to verify that equipment configurations will facilitate replacement and removal, calibration, periodic functional testing, and inspections of equipment and components without impact to operations.	Documented in an evaluation/assessment. Operations or Plant Engineering will participate in the evaluation/assessment.

3.11 Other Structures, Systems, and Components Requirements

3.11.1 Mission and Functional / Performance Requirements (Including States/Modes)

None.

3.11.2 Nuclear Safety, ALARA, Environmental and Other Regulatory Requirements

None.

3.11.3 System Interface Requirements

3.11.3.1 Instrument Service Air – Air Supply

Requirement: The HFH shall interface with the instrument service air system (ISA) to receive air supply for use by the CO_2 decontamination unit. (A.14)

Basis Discussion: None.

Verification: Verification is expected to be achieved through the following:

Verif. Method	Verif. By	Plan	Notes/Comments
I	ENG	Review design to verify that ISA is provided for use by the CO_2 decontamination equipment.	

3.11.4 Other Technical, Specialty, Operations, and Maintenance Requirements

None.

3.12 Relevant Codes and Standards

3.12.1 Codes of Record

Table 3-3 identifies relevant external codes and standards applicable to the HFH design. These are selected from those documents that comprise the Code of Record (COR) as established in 24590-WTP-RPT-ENG-01-001, Technical Baseline Description, i.e., the WTP Contract, the Basis of Design (BOD), and the Safety Requirements Document Volume II (SRD). Use of these documents is typically invoked in the design process through the documents identified in Section 3.12.2. Beyond inclusion here, no attempt is made in this document to extract individual design requirements from these documents for allocation to SSCs.

In some cases, the expected means of verification may be established on the basis of tests or other criteria required by the codes and standards. This does not necessarily include verification or testing more appropriately defined in the procurement of individual subsystems or components, or verification or testing that is a routine activity defined by specifications and/or procedures used by construction and startup.

Table 3-3 High-Level Waste Filter Cave Handling System Applicable Codes and Standards

Implementing Codes and Standards: [Contract No. DE-AC27-01RV14136, WTP Contract]
• Not applicable.
Implementing Codes and Standards: [24590-WTP-DB-ENG-01-001, Rev 2, Basis Of Design]
• AISC M016-89, *Manual of Steel Construction – Allowable Stress Design, Ninth Edition*
• ANSI/AISC N690-1994, *Specification for the Design, Fabrication, and Erection of Steel Safety-Related Structures for Nuclear Facilities*
• ANSI/IEEE N323-1978, *Radiation Protection Instrumentation Test and Calibration*
• ASME B30.2, *Overhead and Gantry Cranes (Top Running Bridge, Single or Multiple Girder, Top Running Trolley Hoist)*

Implementing Codes and Standards: [24590-WTP-DB-ENG-01-001, Rev 2, Basis Of Design]
• ASME B30.11, *Monorails and Underhung Cranes*
• ASME B30.16, *Overhead Hoists (Underhung)*
• ASME NOG-1, *Rules for Construction of Overhead and Gantry Cranes (Top Running Bridge, Multiple Girder)*
• ASTM E84, *Standard Test Method for Surface Burning Characteristics of Building Materials*
• AWS D1.1, *Structural Welding Code - Steel*
• AWS D1.6, *Structural Welding Code - Stainless Steel*
• CMAA 70, *Specifications for Top Running Bridge and Gantry Type Multiple Girder Electric Overhead Traveling Cranes*
• CMAA 74, *Specifications for Top Running and Under Running Single Girder Electric Overhead Traveling Cranes Utilizing Under Running Trolley Hoist*
• IESNA RP-7, *Industrial Lighting*
• NFPA 13-1999, *Standard for the Installation of Sprinkler Systems*
• NFPA 70-1999, *National Electrical Code*
• NFPA 101-1997 and 2000, *Life Safety Code*
• OSHA 29 CFR 1910, *Occupational Safety and Health Standards*
• UBC-1997, *Uniform Building Code*
• WAC 173-303, *Washington Administrative Code - Dangerous Waste Regulations*
Implementing Codes and Standards: [24590-WTP-SRD-ESH-01-001-02, Rev 7F, Section 4, *SRD*]
• AISC M016-89, *Manual of Steel Construction – Allowable Stress Design, Ninth Edition*
• ANSI/AISC N690-1994, *Specification for the Design, Fabrication, and Erection of Steel Safety-Related Structures for Nuclear Facilities*
• ASCE 4-98, *Seismic Analysis of Safety-Related Nuclear Structures*
• ASCE 7-98, *Minimum Design Loads for Buildings and Other Structures*
• ASME NOG-1-2002, *Rules for Construction of Overhead and Gantry Cranes (Top Running Bridge, Multiple Girder)*
• ASME NUM-1-2000, *Rules for Construction of Cranes: Monorails and Hoists*
• CMAA 70-2000, *Specifications for Top Running Bridge and Gantry Type Multiple Girder Electric Overhead Traveling Cranes*
• CMAA 74-2000, *Specifications for Top Running and Under Running Single Girder Electric Overhead Traveling Cranes Utilizing Under Running Trolley Hoist*
• DOE-STD-1020-94, *Natural Phenomena Hazards Design and Evaluation Criteria for Department of Energy Facilities,* as tailored in Appendix C of the SRD
• DOE-STD-1066-97, *Fire Protection Design Criteria*, as tailored in Appendix C of the SRD

Implementing Codes and Standards: [24590-WTP-SRD-ESH-01-001-02, Rev 7F, Section 4, *SRD*]
• IEEE 379-1994, *Application of the Single Failure Criterion to Nuclear Power Generating Station Safety Systems*, as tailored in Appendix C of the SRD
• IEEE 497-2002, *Standard Criteria for Accident Monitoring Instrumentation for Nuclear Power Generating Stations* as tailored in Appendix C of the SRD
• IEEE 1023-88, *Guide for the Application of Human Factors Engineering to Systems, Equipment, and Facilities of Nuclear Power Generating Stations*
• NFPA 69-2002, *Standard on Explosion Prevention Systems*, as tailored in Appendix C of the SRD
• NFPA 70-1999, *National Electrical Code*
• NFPA 801-2003, *Standard for Fire Protection for Facilities Handling Radioactive Materials*, as tailored in Appendix C of the SRD
• UBC-1997, *Uniform Building Code,* as tailored in Appendix C of the SRD

3.12.2 WTP Design Criteria, Design Guides, and General Specifications

Table 3-4 identifies relevant discipline design criteria, guides, and general specifications applicable to the HFH. Use of these documents to develop the detailed design of SSCs is governed by engineering procedures. The majority of requirements contained within this document are derived from external codes and standards, or are specified methods and approaches to achieve standardization and consistency of design. Beyond inclusion here, no attempt is made in this document to extract individual design requirements from these documents for tracing and verification, or to define how direction provided by these documents is applicable and allocated (or not) to individual SSCs.

Table 3-4 WTP Design Criteria, Design Guides, and General Specifications Applicable to HFH

Document Number	Title
Design Criteria Documents	
24590-WTP-DC-M-06-001	Mechanical Systems Design Criteria
24590-WTP-DC-E-01-001	Electrical Design Criteria
24590-WTP-DC-E-07-001	Design Criteria for Electrical Jumpers
24590-WTP-DC-ENG-06-001	Design Criteria for Environmental and Natural Phenomena Hazard Qualification of Structures Systems and Components
24590-WTP-DC-ST-04-001	Seismic Analysis and Design Criteria
Design Guides	
24590-WTP-GPG-ENG-029	Seismic Category III/IV Cable Tray And Conduit Support Design
24590-WTP-GPG-ENG-033	Evaluation for Seismic Interaction Effects
24590-WTP-GPG-ENG-086	Equipment Environmental Qualification
24590-WTP-GPG-ENG-0103	Equipment Seismic Qualification
24590-WTP-GPG-ENG-0109	Accessibility Review of Equipment and Components
24590-WTP-GPG-ENG-0141	WTP Radiation Damage Thresholds for Non-Metallic Materials

Table 3-4 WTP Design Criteria, Design Guides, and General Specifications Applicable to HFH

Document Number	Title
24590-WTP-GPG-ENG-0150	Plant Design/Mechanical Systems Equipment Interfaces: Terminal End Equipment
24590-WTP-GPG-ENG-0159	Single Failure Analysis Process for Mechanical, HVAC, and Control Systems
24590-WTP-GPG-J-005	Control Systems Interfaces
24590-WTP-GPG-J-014	Control Systems Design Process Guide
24590-WTP-GPG-J-017	WTP Seismic Category Application to C&I Systems
24590-WTP-GPG-J-0057	Setpoint Calculations
24590-WTP-GPG-M-013	Plant Wash System Design
24590-WTP-GPG-M-036	Determining Quality Level and Seismic Category Classification of Sub-Components, Assemblies, Sub-Assemblies, and Parts
24590-WTP-GPG-M-052	Specifying Design Cycles for Equipment and Piping
24590-WTP-GPG-PL-002	Plant Design Material Control Guide
24590-WTP-GPG-SRAD-001	Design Guide for ALARA
Specifications	
24590-HLW-3PS-MX00-T0001	Engineering Specification for QL Shielded Personnel Access Doors
24590-WTP-3PS-ADDC-T0002	Engineering Specification for HLW System Transfer Hatches, Hatch Drives, Hatch Pushrod Assemblies, and Floor Penetration Liners
24590-WTP-3PS-ADDH-T0006	Engineering Specification for QL Crane Maintenance Shield Doors for HLW and PTF
24590-WTP-3PS-FB01-T0001	Engineering Specification for Structural Design Loads for Seismic Category III & IV Equipment and Tanks
24590-WTP-3PS-G000-T0002	Engineering Specification for Positive Material Identification (PMI) for Shop Fabrication
24590-WTP-3PS-G000-T0015	Engineering Specification for Environmental Qualification of Mechanical Equipment
24590-WTP-3PS-HCYT-T0002	Engineering Specification for HLW and PTF Solid Waste, Filter, and Decontamination Baskets
24590-WTP-3PS-JQ00-T0004	Engineering Specification for Management of Supplier Software
24590-WTP-3PS-JQ00-T0005	Engineering Specification for Management of Supplier Safety Software
24590-WTP-3PS-JQ06-T0005	Engineering Specification for Environmental Qualification of Control and Electrical Systems and Components
24590-WTP-3PS-JQ07-T0001	Engineering Specification for Instrumentation for Package Systems
24590-WTP-3PS-JQ08-T0001	Engineering Specification for Construction and Installation of Controls and Instrumentation
24590-WTP-3PS-M000-T0006	Engineering Specification for WTP Facility Posting Port
24590-WTP-3PS-M000-T0007	Engineering Specification for WTP Facility Posting Port Glovebox
24590-WTP-3PS-M000-T0012	Engineering Specification for Master Slave Manipulators for PTF, HLW, LAW and LAB

Table 3-4 WTP Design Criteria, Design Guides, and General Specifications Applicable to HFH

Document Number	Title
24590-WTP-3PS-MJKG-T0002	Engineering Specification for CMAA 74 Top Running & Under Running Single Girder & CMAA 70 Top Running Bridge & Gantry Type Multiple Girder EOT Cranes
24590-WTP-3PS-MJKG-T0004	Engineering Specification for High Integrity Cranes With Power Manipulators
24590-WTP-3PS-MQL0-T0003	Engineering Specification for Special Grapples and Lifting Devices
24590-WTP-3PS-SS90-T0001	Engineering Specification for Seismic Qualification of Seismic Category I/II Equipment and Tanks
24590-WTP-3PS-SS90-T0002	Engineering Specification for WTP Project Tailoring of ANSI/AISC N690 & IEEE 323, 344, & 382

4 System Description

This section summarizes design output information, describing the current design and the operational and maintenance aspects of the system. The information provided below does not contain design requirements and should not be used as design input. The description of the current design contained in this section may not fully align with design requirements. This is acceptable within the context of this document. Areas of misalignment are to be resolved through appropriate mechanisms and the SDD updated to reflect changes made to the design. Changes to the descriptive text will be made following the changes to the lower tiered Engineering documents.

4.1 Configuration Information

To comply with ALARA and operational requirements, the filter cave (H-0104) provides shielding from high levels of radiation, and facilitates contamination control. Contamination is controlled by cascading air from areas of lower contamination potential to areas of higher contamination potential. HFH has a dedicated crane maintenance area (H-0201) separated from the filter cave by shield doors that provide both shielding and contamination control utilizing engineered air gaps. The filter lay down room (H-0103) is located on elevation +0 ft, directly below the CMA. The floor separating the CMA and filter lay down area has a floor plug that allows access between the two areas. The filter lay down area acts as a staging area for new filters.

Refer to drawings 24590-HLW-P1-P23T-00203, 24590-HLW-P1-P23T-00208 and 24590-HLW-P1-P23T-00213, *HLW Vitrification Building Equipment Location Plan EL. 14'-0"* for room locations.

Refer to drawings 24590-HLW-P1-P23T-00303, 24590-HLW-P1-P23T-00308 and 24590-HLW-P1-P23T-00313, *HLW Vitrification Building Equipment Location Plan EL. 37'-0"* for equipment locations.

Refer to drawings 24590-HLW-P1-P23T-00403, *HLW Vitrification Building Equipment Location Plan EL. 58'-0"* for equipment locations.

Refer to drawing 24590-HLW-A5-A19T-05201001, *HLW Vitrification Building Architectural Room Finish Schedule EL. 0'-0"* and 24590-HLW-A5-A19T-05202001, *HLW Vitrification Building Architectural Room Finish Schedule EL. 14'-0"* for room finish details.

4.1.1 Description of System, Subsystems, and Major Components

4.1.1.1 Description of Mechanical Handling Equipment

HFH mechanical handling equipment is designed to meet operational and ALARA requirements, with a nominal plant life of 40 years to minimize worker exposure by reducing maintenance and replacement activities. Where commercially available components do not have a design life of 40 years, the equipment is designed to facilitate maintenance activities by having remote fasteners, electrical connectors etc., and the use of modularization to facilitate remote handling activities. Features to aid decontamination, such as flat smooth surfaces, elimination of crevices etc., are incorporated into the design. Materials and coatings have been selected to withstand the radiological environment in the filter cave, and withstand decontamination. Wherever possible, permanently sealed for life components are used. [3.4.1.1.1, 3.4.4.1, 3.4.4.4, 3.6.4.6]

Equipment provided by HFH is listed below in Table 4-1. For detailed equipment information refer to 24590-HLW-M0X-M40T-00010, *Mechanical Handling Equipment List for HLW System HFH.*

Table 4-1 Plant Item List

Plant Item Number	Description
24590-HLW-AD-HFH-DOOR-00001	Horizontal Shield Door Filter Cave Maintenance Area
24590-HLW-AD-HFH-DOOR-00002	Vertical Shield Door Filter Cave Maintenance Area
24590-HLW-AD-HFH-DOOR-00004	3" Shielded Personnel Access Door (SPAD)
24590-HLW-AD-HFH-HTCH-00001	Filter Cave Export Hatch
24590-HLW-DD-HFH-TWDVC-00003	Tool Posting Port Swab/Equipment
24590-HLW-FH-HFH-TOOL-00001	Impact Wrench (12" Extension)
24590-HLW-FH-HFH-TOOL-00002	Vacuum
24590-HLW-FH-HFH-TOOL-00003	Nut Runner
24590-HLW-FH-HFH-TOOL-00004	Seat Cleaning Tool
24590-HLW-FH-HFH-TOOL-00005	Filter/Filter Lid Grapple
24590-HLW-FH-HFH-TOOL-00010	Manipulator Spray Lance (Water)
24590-HLW-FH-HFH-TOOL-00013	Manipulator Spray Lance (Carbon Dioxide)
24590-HLW-M0-HFH-GB-00001	Posting Port Glovebox Swab/Equipment
24590-HLW-MJ-HFH-CRN-00001	Filter Cave Maintenance Area Crane
24590-HLW-MJ-HFH-CRN-00002	Filter Cave Crane/ Power Manipulator
24590-HLW-MH-HFH-MHAN-00001	Cable Reeling System
24590-HLW-MH-HFH-MHAN-00004	Filter Import Rack
24590-HLW-MH-HFH-MHAN-00005	Power Manipulator Arm Change Fixture
24590-HLW-MH-HFH-MHAN-00006	Filter Cave Tool Rack
24590-HLW-MH-HFH-MHAN-00010	Filter Cave Decontamination Station
24590-HLW-MH-HFH-MHAN-00011	Power Manipulator Wrist Stand
24590-HLW-MH-HFH-MHAN-00012	Power Manipulator Parallel Jaw Hand Change Fixture
24590-HLW-MH-HFH-MHAN-00013	Nut Runner Stand
24590-HLW-MH-HFH-RCVY-00004	Horizontal Shield Door Recovery Plug
24590-HLW-MJ-HFH-MANIP-00003	Master Slave Manipulator

Plant Item Number	Description
24590-HLW-MJ-HFH-MANIP-00004	Master Slave Manipulator
24590-HLW-MJ-HFH-MANIP-00005	Master Slave Manipulator
24590-WTP-MH-30-MHAN-00019	Filter Disposal Basket

4.1.1.2 Filter Cave Equipment

4.1.1.2.1 Filter Cave Crane/Power Manipulator

Plant Item Number: 24590-HLW-MJ-HFH-CRN-00002
Plant Item Number: 24590-HLW-MH-HFH-MHAN-00001(Cable Reel)
Plant Item Number: 24590-HLW-JC-HFH-PNL-00002 (Main Control Panel)

Refer to: 24590-WTP-3PS-MJKG-T0004, *Engineering Specification for High Integrity Cranes with Power Manipulators.*
Refer to: 24590-HLW-M0X-M40T-00010, *Mechanical Handling Equipment List for HLW System HFH.*

The filter cave crane/power manipulator is a top running double girder high integrity bridge crane, seismically qualified to SC-II, which requires the crane to remain in place during, and after a seismic event.

The cable reel is classified as Safety Class and SC-I having a safety function to remain in place during a DBE seismic event as not to create a 6" or greater diameter (equivalent) opening in the C5/R5 boundary. [3.4.2.1, 3.4.2.2]

The crane is equipped with a 1-ton mast-mounted power manipulator and a 6 ton hoist, both mounted on a common trolley. Control and power to the crane is provided via a multi-core umbilical cable deployed into the filter cave from the CMA. The cable is tethered to the west end carriage of the bridge, and guided on rollers along the length of the filter cave, into the CMA and terminated on a cable reel. The cable reel is driven through wall, locating the cable reel drive system out-cave. The crane is controlled via the MHJ from the control room or from an LOI.

The crane is provided with recovery drives on the six ton hoist and telescopic mast in the event of the primary drive failure. The trolley and bridge are supplied with jack down wheels that are deployed in the event of drive failure or wheel seizure. The jack-down wheels lift the failed wheel clear of the rail, and provide drive to return the crane to the CMA. The crane/power manipulator is of modular construction that facilitates removal and replacement of failed components, and is designed to withstand decontamination without degrading functionality of the electrical or mechanical components. Lubrication systems are designed to be accessible to aid maintenance. The cable reeling system can also be used to pull the crane back to the CMA in the event of bridge drive system failure. [3.4.4.4, 3.4.4.9, 3.5.1.4, 3.5.4.3]

The crane/power manipulator is equipped with an onboard fire suppression system, which automatically activates on detection of a fire. The cable reel enclosure located in the CMA is equipped with a separate fire suppression system which automatically activates on detection of fire.

The main function of the filter cave crane/power manipulator is to service the filter banks; this includes importing new filters into the filter cave from the CMA, opening the dampers on the standby filter bank, and closing dampers on the filter bank that requires filter change out. A filter grapple suspended from the six ton hoist (with rotating hook) is used to remove the filter bank doors and spent filters from the filter housing, and loading the spent filters into the filter basket for disposal to System RWH.

The crane is equipped with bridge mounted lights and cameras. The manipulator has a wrist mounted camera to allow viewing of the filter sealing location in the filter bank. If cleaning of the sealing surface is required, the manipulator can deploy a filter seat cleaning tool. A portable vacuum can be used if any filter seal deposits have been left on the sealing surface, or in the bottom of the filter bank. New filters can now be placed into position in the filter bank, and the bank lids can be replaced and secured.

All remote handing operations in the filter cave are performed by the filter cave crane/power manipulator, including maintenance of failed filter bank dampers (removal to the CMA), handling of filter baskets to the filter export hatch that provides access to the drum transfer tunnel (RWH system). A cover is located over the export hatch that prevents accidental dropping of items into the tunnel below. The cover is remotely removed and replaced with the power manipulator.

The power manipulator has slip clutches built into its arm motion to prevent an overload condition that may produce a failure. Slip clutches may be adjusted in the maintenance area as required (within the load range provided in the specification) to limit the applied forces. The force-limiting properties of the slip clutch are only applicable when the direction of force applied will produce rotation at the clutch pivot point. Administrative controls through procedural guidance must be implemented to avoid operating conditions where the direction of the force and the angle of the slip clutch pivot point do not apply a rotational moment to the arm. This failure condition will typically occur when one or more pivot points is in a 90° or 180° orientation.

Figure 4-1 Filter Cave Crane/Power Manipulator

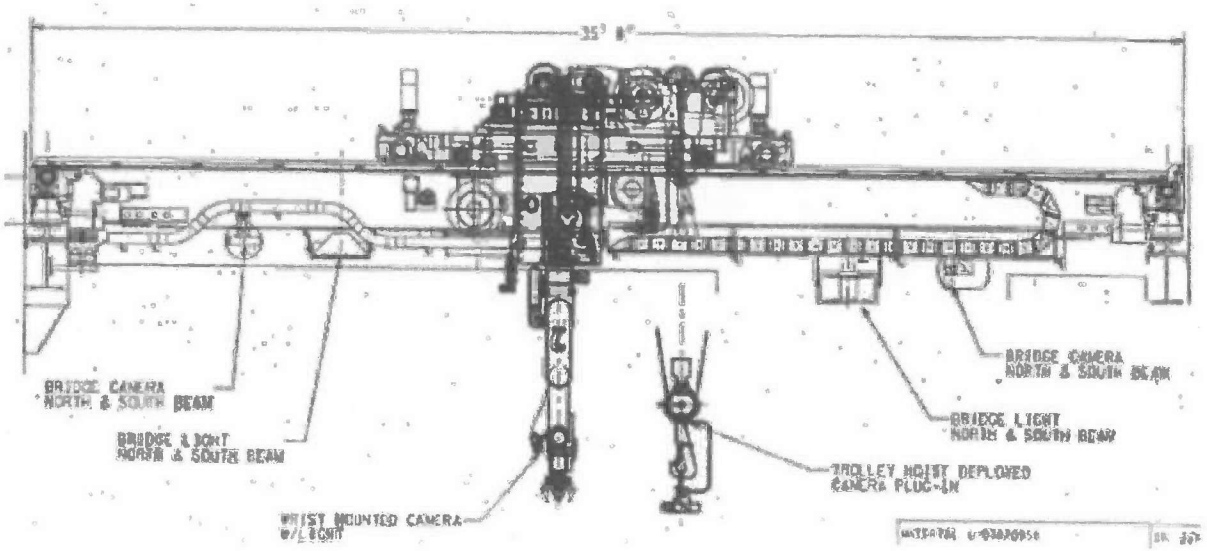

4.1.1.2.2 Maintenance Crane

Plant Item Number: 24590-HLW-MJ-HFH-CRN-00001
Plant Item Number: 24590-HLW-JC-HFH-PNL-00001 (Main Control Panel)

Refer to: 24590-WTP-3PS-MJKG-T0002, *Engineering Specification for CMAA 74 Top Running & Under Running Single Girder & CMAA 70 Top Running Bridge & Gantry Type Multiple Girder EOT Cranes.*
Refer to: 24590-HLW-M0X-M40T-00010, *Mechanical Handling Equipment List for HLW System HFH.*

The maintenance crane is located in the CMA (H-0201) at elevation +49 ft. The function of the crane is to aid in the maintenance of the crane /power manipulator positioned below. The crane is a CMAA 74 top running single girder crane, with a maximum capacity of 7.5 tons. Platforms are provided to allow inspection and lubrication of the maintenance crane.

The crane is locally controlled via a digital radio, with a two speed main hoist and a two speed power rotate on the hook. Slow down limit switches protect the bridge and trolley near the ends of their maximum travel from impacting the end stops.

Figure 4-2 Maintenance Crane

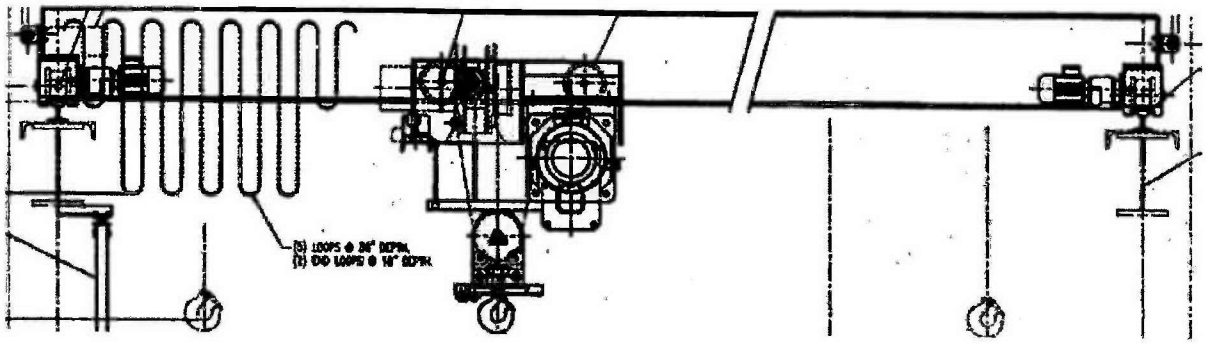

4.1.1.2.3 Tool Posting Port and Glovebox

Tool Posting Port

Plant Item Number: 24590-HLW-DD-HFH-TWDVC-00003

Refer to: 24590-WTP-3PS-M000-T0006, *Engineering Specification for WTP Facility Posting Port.*
Refer to: 24590-HLW-M0X-M40T-00010, *Mechanical Handling Equipment List for HLW System HFH.*

Posting Port Glovebox

Plant Item Number: 24590-HLW-M0-HFH-GB-00001

Refer to: 24590-WTP-3PS-M000-T0007, *Engineering Specification for WTP Facility Posting Port Glovebox*
Refer to: 24590-HLW-M0X-M40T-00010, *Mechanical Handling Equipment List for HLW System HFH.*

The posting port is classified as Safety Class and SC-I having a safety function to remain in place during a DBE seismic event as not to create a 6" or greater diameter (equivalent) opening in the C5/R5 boundary. [3.4.2.1, 3.4.2.2]

The posting port (see Figure 4-3) is a through wall transport device, its function is to enable small items to be transferred to and from the filter cave. The posting port is positioned in the east wall near the filter cave tool rack. The posting port (located through-wall) consists of a shielded through wall transport tray, in-cave and out-cave shield doors, and gamma monitors.

The out-cave shield door is interlocked to a gamma monitor, (located in the through-wall portion of the posting port). The gamma monitor interlock prevents the out-cave door from opening, on detection of a high radiation

source. The in-cave and out-cave shield doors are interlocked to prevent both doors being open simultaneously. The glovebox has inner and outer air lock doors for tool and swab import, and a bag out port for export. A transport tray transfers tools/swabs from the glovebox to a retrieval location in-cave, accessible by MSMs.

The glovebox is vented to the filter cave to ensure contamination is cascaded from an area of lower to higher contamination potential. This ventilation path is provided by a stainless steel pipe connected to the bottom of the glovebox to a joggle pipe penetrating the shield wall into the filter cave. This ventilation pipe also provides a drainage path into the filter cave should the glovebox internal fire suppression system activate.

The glovebox consists of two sections fabricated to form a single unit. The first section is an airlock provided for the import of items into the glovebox. The airlock doors are interlocked to prevent both doors being open at the same time, and the inner air lock door is also interlocked to the posting port out-cave shield door. The drives for both the in-cave and out-cave shield are located out-cave. [3.10.1.4.1]

On retrieval of swabs, gamma monitors within the posting port perform detection of high radiation dose rates. If high dose rates are detected, the swab is returned to the filter cave area for disposal via system RWH. Acceptable swabs are introduced into the glovebox and checked by the operator using a hand-held monitoring device. The used swabs will then be bagged out for disposal. The posting port will interface with the MSM for handling of items in-cave. [3.10.1.4.6, 3.7.1.2, 3.7.1.3]

Figure 4-3 Posting Port and Glovebox

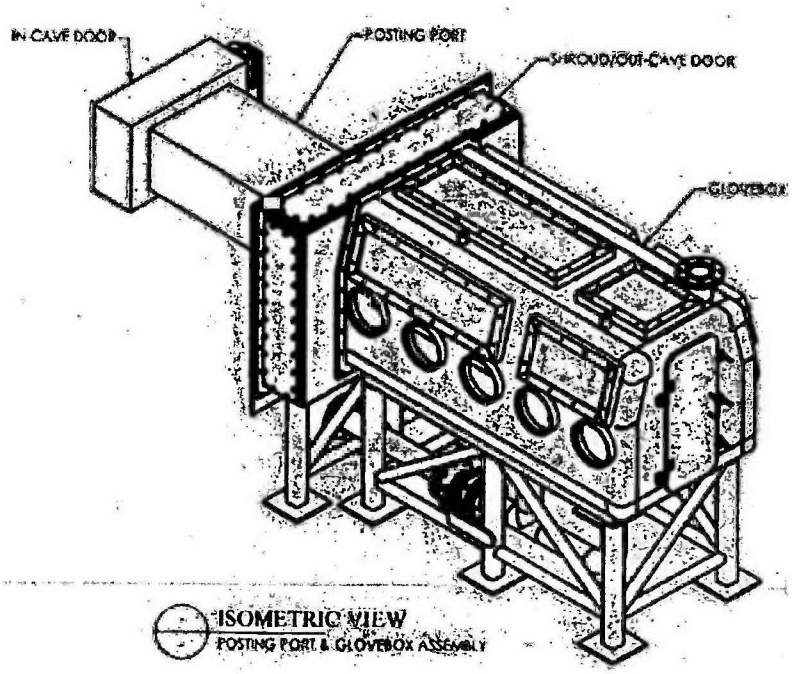

4.1.1.2.4 Filter Cave Tool Rack

Plant Item Number: 24590-HLW-MH-HFH-MHAN-00006

Refer to: 24590-HLW-M0D-HFH-00007, *HFH-MHAN-00006 – Filter Cave Tool Rack Datasheet*

Refer to: 24590-HLW-M0X-M40T-00010, *Mechanical Handling Equipment List for HLW System HFH.*

The filter cave tool rack is used for storage of in-cave tools, and as a work area for performing in-cave remote maintenance. The tool rack is located directly in front of a shielded viewing window in the east wall, and is accessible by the MSMs for in-cave maintenance and swabbing operations. This area is designed to allow the crane and manipulator operators quick and efficient access to in-cave tools and staged equipment.

Figure 4-4 Tool Rack

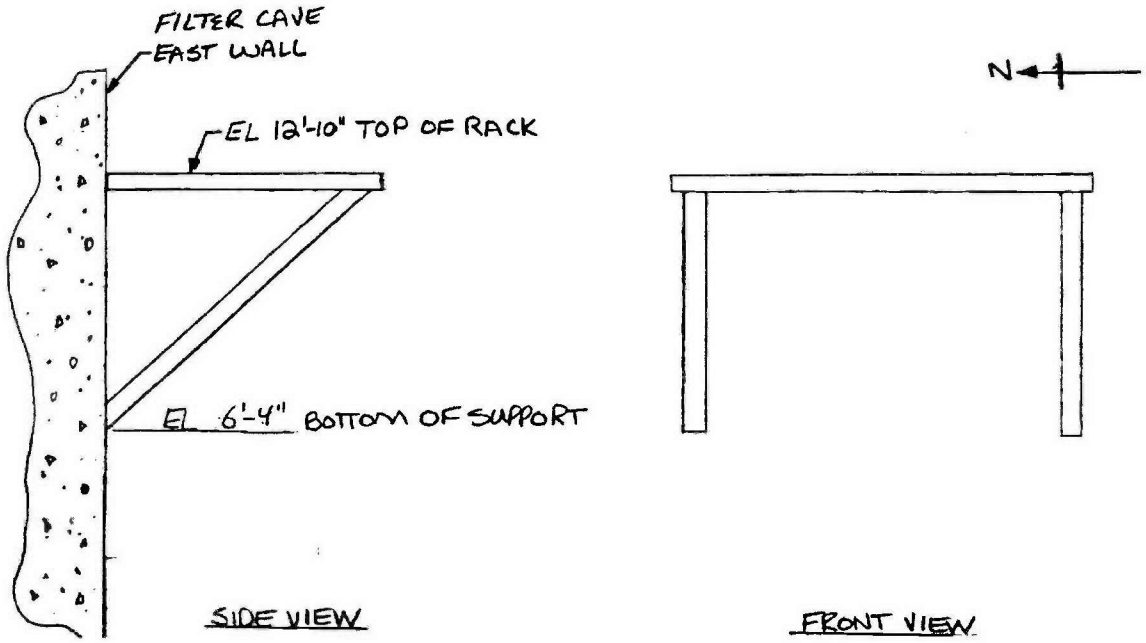

4.1.1.2.5 Filter Cave Export Hatch

Plant Item Number: 24590-HLW-AD-HFH-HTCH-00001
Plant Item Number: 24590-HLW-DD-HFH-LINER-00004

Refer to: 24590-WTP-3PS-ADDC-T0002, *Engineering Specification for HLW System Transfer Hatches, Hatch Drives, Hatch Pushrod Assemblies, and Floor Penetration Liners.*
Refer to: 24590-HLW-M0X-M40T-00010, *Mechanical Handling Equipment List for HLW System HFH.*

The filter cave export hatch is located in the filter cave on elevation +14 ft, HP0104A. The hatch allows for the export of filter baskets to the drum transfer bogie (RWH) located in the drum transfer tunnel at elevation –9 ft 6 in. The export hatch cover is removed when there is an empty 55 US gallon drum positioned below the hatch (on a bogie) in the drum transfer tunnel.

The export hatch cover is an open grate design, which has no impact on the C5 ventilation flow whether open or closed. The purpose of the cover is to prevent inadvertent dropping of items into the tunnel below. The filter cave crane/power manipulator hook removes the export hatch cover. The filter cave crane/power manipulator hook then lowers the full filter disposal baskets through the hatch and into a 55 gallon drum.

There are no interlocks or instrumentation associated with this equipment.

Figure 4-5 Export Hatch

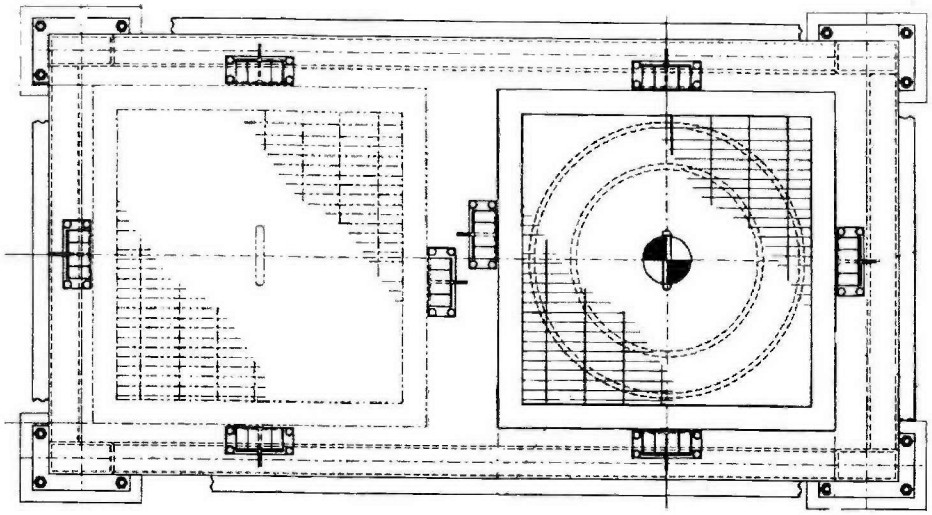

4.1.1.2.6 Shield Doors

Vertical Shield Door

Plant Item Number: 24590-HLW-AD-HFH-DOOR-00002

Refer to: 24590-HLW-M0X-M40T-00010, *Mechanical Handling Equipment List for HLW System HFH.*

Horizontal Shield Door

Plant Item Number: 24590-HLW-AD-HFH-DOOR-00001
Plant Item Number: 24590-HLW-MH-HFH-RCVY-00004

Refer to: 24590-WTP-3PS-ADDH-T0006: *Engineering Specification for QL Crane Maintenance Shield Doors for HLW and PTF*
Refer to: 24590-HLW-M0X-M40T-00010, *Mechanical Handling Equipment List for HLW System HFH.*

The shield doors are classified as SS and SC-II. [3.4.2.1, 3.4.2.2]

Shield doors are located between the filter cave and the CMA to provide shielding and confinement to protect personnel in the CMA from exposure to the C5/R5 filter cave. The shield doors are seismically qualified to SC-II, which requires the doors to remain in place during, and after a seismic event. The shield doors allow passage of the crane/power manipulator, and any equipment it may carry, between the filter cave and the CMA, where decontamination and maintenance activities can be performed. The shield door arrangement is shown in Figure 4-6.

The horizontal shield door recovery plug is classified as SC and SC-I having a safety function to remain in place during a DBE seismic event as not to create a 6 in. or greater diameter (equivalent) opening in the C5/R5 boundary. The horizontal shield door recovery plug (HFH-RCVY-00004) provides access for the horizontal door

recovery system (HSH-RCVY-00006), for recovery of the horizontal shield door. See Figure 4-7 for the horizontal door recovery system. [3.4.2.1, 3.4.2.2]

The shield doors aid in contamination control by regulating the airflow from areas of lower contamination potential into areas of higher contamination potential. Air flow is controlled around the doors by adjustable air gap plates; these will be tuned to provide the required airflow for HVAC requirements. [3.6.1.1]

The shield door system is comprised of two items, a vertical and a horizontal door that operate as a pair. The doors are interlocked to ensure correct opening and closing sequences. The bottom edge of the vertical door provides guidance to the top edge of the horizontal door, this requires the vertical door to be in the lowered "closed" position to allow the horizontal door to open and close.

The vertical door is raised and lowered on a pair of roller screws, driven by a single reversible electric motor located in a personnel accessible area. The door raising and lowering operations are failsafe. The brakes attached to each of the roller screws engage when power is lost to the drive system. Refer to Section 4.2 for additional details regarding off-normal operations and recovery of the vertical shield doors (utilizing recovery systems HSH-RCVY-00003 and HSH-RCVY-00015). The door is guided on rails located in the CMA. The guide rollers and rails are adjustable and replaceable when the door is in the closed position.

The horizontal door is supported and guided by a rail located at the base of the door. Drive is provided by a roller screw, driven by a single reversible electric motor located in the CMA, which is a personnel accessible area. As previously discussed, the horizontal door also is guided along its top edge by a guide system attached to the underside of the vertical door. The vertical door is interlocked with the horizontal door to ensure the vertical door is closed prior to moving the horizontal door. [3.10.1.4.2]

Figure 4-6 Vertical and Horizontal Shield Door

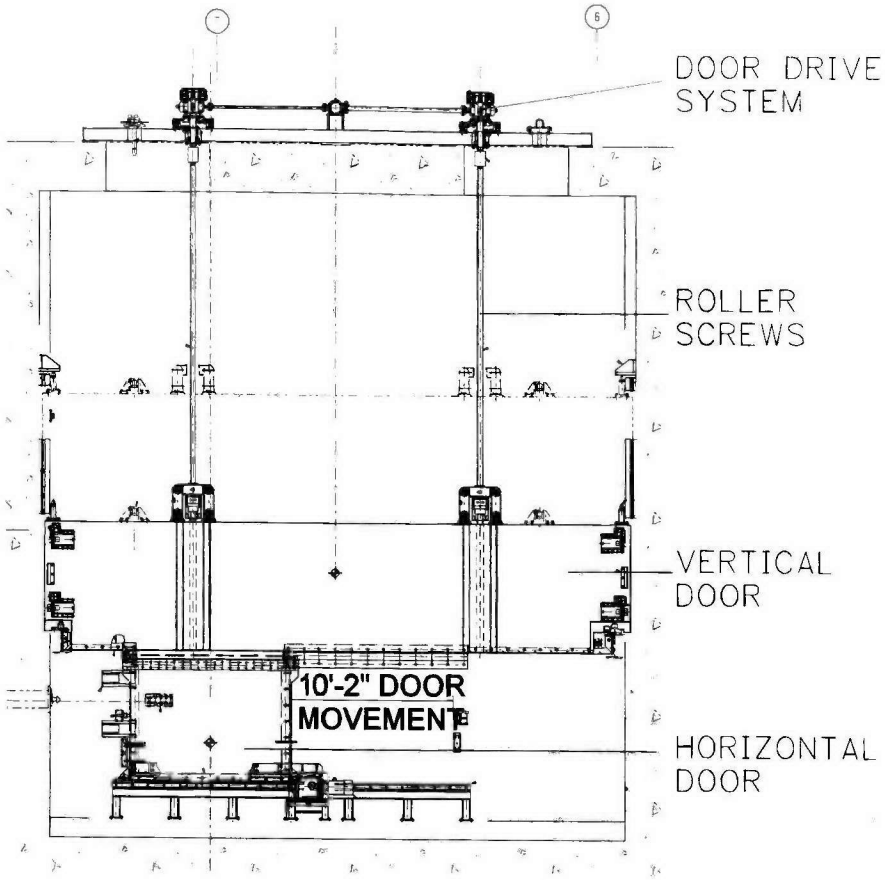

Figure 4-7 Horizontal Door Recovery Equipment

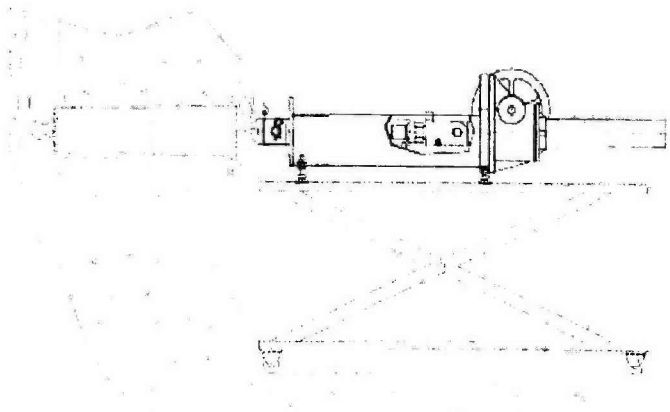

4.1.1.2.7 Shielded Personnel Access Door

Plant Item Number: 24590-HLW-AD-HFH-DOOR-00004

Refer to: 24590-HLW-3PS-MX00-T0001, *Engineering Specification for QL Shielded Personnel Access Doors*
Refer to: 24590-HLW-M0X-M40T-00010, *Mechanical Handling Equipment List for HLW System HFH.*

A 3 in. thick SPAD is located in the east wall of the CMA (H-0201). The function of the SPAD is to provide shielding to personnel in C2/R2 areas from the C5/R5 filter cave when the horizontal and/or vertical shield doors are open, and to provide a 2 hour rated fire barrier. The SPAD is fitted with a full contact door seal to minimize air leakage. The SPAD is shown in Figure 4-8. [3.4.2.4, 3.6.1.2, 3.6.2.1]

The SPAD is classified as Safety Class (SC), SC-I having a safety function to remain in place during a DBE seismic event as not to create a 6 in. or greater diameter (equivalent) opening in the C3/R3 boundary. [3.4.2.1, 3.4.2.2]

The SPAD is fitted with a combined latch/vacuum-breaking lever (on each side of the door) that both releases the door and provides mechanical advantage to overcome HVAC pressure acting on the door. The latch is fitted with a padlock that is used for locking the door in the open or closed position.

The SPAD includes a damping system that controls deceleration at end of door swing, both opening and closing. This reduces trapping hazards, and prevents overloading of the bump stops and hinges.

Figure 4-8 Three Inch Shielded Personnel Access Door

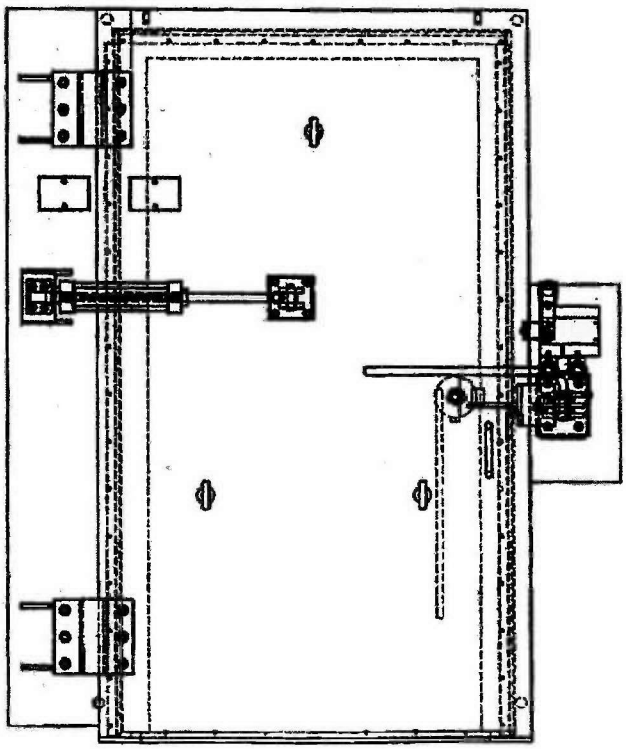

4.1.1.2.8 Filter Grapple

Plant Item Number: 24590-HLW-FH-HFH-TOOL-00005

Refer to: 24590-WTP-3PS-MQL0-T0003, *Engineering Specification for Special Grapples and Lifting Devices*
Refer to: 24590-HLW-M0X-M40T-00010, *Mechanical Handling Equipment List for HLW System HFH.*

The filter grapple is a mechanically actuated lifting device used to transport filters and filter housing doors within HFH. The grapple is suspended from the crane power/manipulator six ton hoist hook. The grapple is shown in Figure 4-9.

The grapple includes an indexing feature that requires two fully lowered set downs to open the fingers and disengage the filter or lid. This feature prevents an inadvertent release of the load during handling, for example, if the load hits an obstruction during transport, or begins tipping due to an uneven set down surface. The grapple is fitted with indicators that signal when the fingers are in the open or closed position, and also indicate the indexing stage, that is, has one set down or two set downs been completed.

The configuration of the grapple fingers ensures that it is not possible to lift a load unless all three fingers are fully engaged. The grapple is equipped with an emergency means to retract the fingers from the load should the normal disengagement mechanism fail. This disengagement can be performed with the MSM located at the shield window maintenance location, or using the crane mounted power manipulator.

Figure 4-9 Filter Grapple

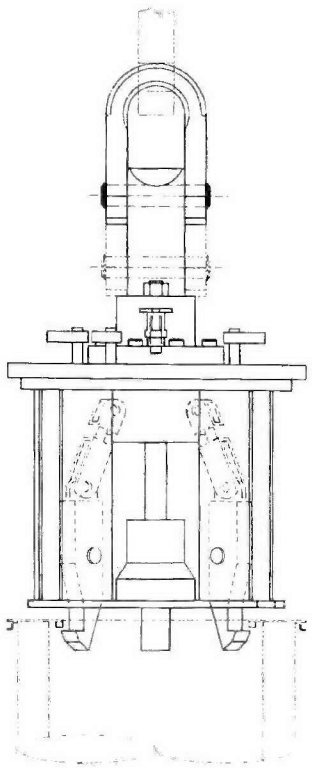

4.1.1.2.9 Master Slave Manipulators

Plant Item Numbers: 24590-HLE-MJ-HFH-MANIP-00003, 00004 and 00005.

Refer to: 24590-WTP-3PS-M000-T0012, *Engineering Specification for Master Slave Manipulators for PTF, HLW, LAW and LAB.*
Refer to: 24590-HLW-M0X-M40T-00010, *Mechanical Handling Equipment List for HLW System HFH.*

The radiation shielding provided by the HLW seal tubes is classified as Safety Significant (SS). The master and slave arms are classified as nonsafety. The fasteners that secure the seal tube to the encast liner are classified as Safety Class (SC) having a safety function to maintain the seal tubes in place during a DBE seismic event as not to create a 6 in. or greater diameter (equivalent) opening in the C5/R5 boundary. [3.4.2.1, 3.4.2.2]

The filter cave is equipped with three MSMs; a pair of MSMs through the east wall located above the filter cave tool rack and window 30-SWIN-00020 (adjacent to the tool posting port and glovebox), and a single MSM through the east wall located above the decontamination station. Each MSM location is equipped with a shield window for operational viewing. An MSM is shown in Figure 4-10.

The MSM is comprised of a master arm located out-cave in the operations area, a through wall shielding seal tube, and an in-cave slave arm. The slave arm reacts to motion inputs from the master via operations personnel manipulation. The slave arm has a maximum load capacity of 50 lb. Each MSM has a set of removable fingers which are used to hold and manipulate in-cave items. A removable polyurethane boot covers the slave arm to minimize contamination of the arm and its internal working components.

The function of the MSMs located at the tool rack is to remotely assist in coupling and decoupling of the crane hook from in-cave equipment, such as the filter grapple, nut runner, impact wrench or any other in-cave equipment that requires MSM manipulation. The MSM located next to the posting port will also be used to retrieve items posted into the cave such as maintenance items, wipes and swabs. Clean swabs will be posted into the cave and manipulated with the MSM to swab equipment as required.

The MSM located at the decontamination station may be used for manipulating through wall decontamination equipment such as a CO_2 spray lance or manual wipes.

Figure 4-10 Master Slave Manipulator

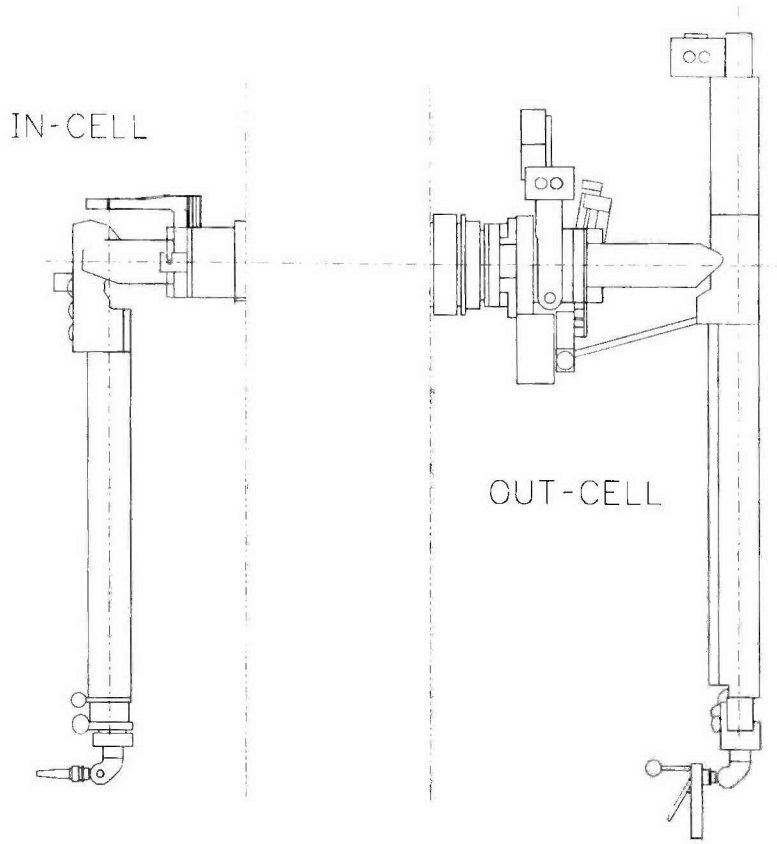

4.1.1.2.10 Shielded Glass Windows

Plant Item Numbers: 24590-WTP-AD-30-SWIN-00020 and 00021

The shielded glass windows provide direct operator viewing capabilities into the C5/R5 areas from the C2/R2 operating corridors while protecting personnel from radiation and contamination sources within the filter cave.

The filter cave is equipped with two shield windows through the east wall. The shield windows provide attenuation to radiation sources within these areas and provide wide angle viewing of the filter cave process and maintenance activities. [3.4.3.1]

Figure 4-11 Shield Window (Typical)

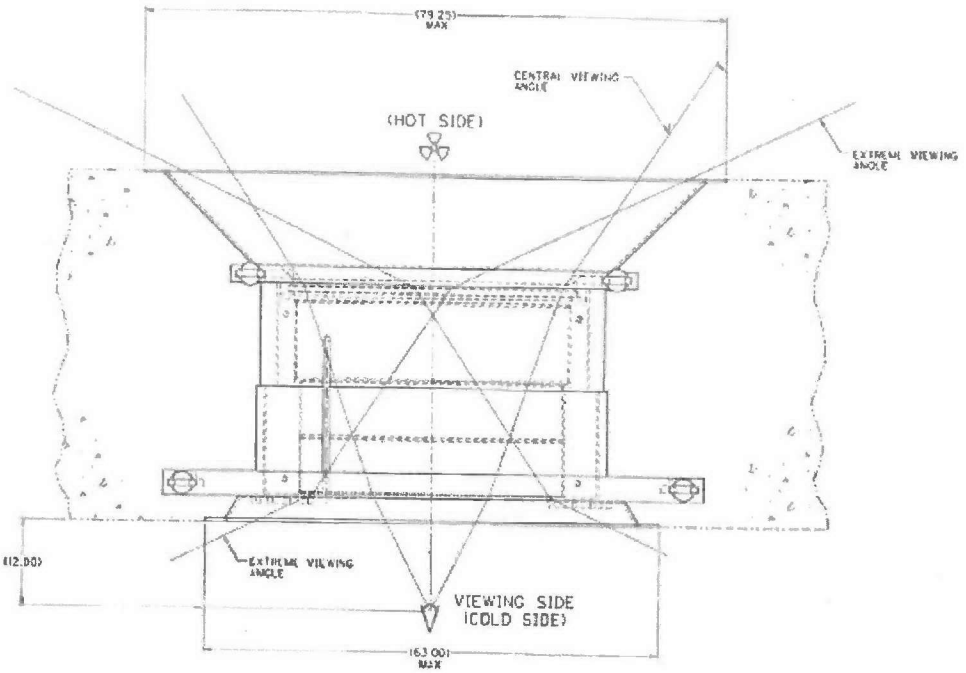

4.1.1.2.11 Filter Basket

Plant Item Numbers: 24590-WTP-MH-30-MHAN-00019

Refer to: 24590-WTP-3PS-HCYT-T0002, *Engineering Specification for HLW and PTF Solid Waste, Filter and Decontamination Baskets.*
Refer to: 24590-HLW-M0X-M40T-00010, *Mechanical Handling Equipment List for HLW System HFH.*

The filter basket is a consumable item and is sized to accommodate and provide partial containment of a single HEPA filter. The basket consists of a body and lid. The lid is attached to the body by a bayonet type connection, consisting of pins on the basket lid, and slots on the basket body. The pins on the lid are lined up with the slots in the body; the lid is remotely turned with the MSM or power manipulator to engage with the body. A filter basket is shown in Figure 4-12.

The filter grapple engages with a ring that forms the upper part of the lid. The internal diameter of the ring matches the internal diameter of the HEPA filter; this allows the grapple to be used for both filter handling and basket handling purposes. Once the filter has been placed in the basket and lid secured, it is transferred to the decontamination station, decontaminated, and then transferred to the RWH via the export hatch. [3.5.1.5, 3.9.1.1]

Figure 4-12 Filter Basket

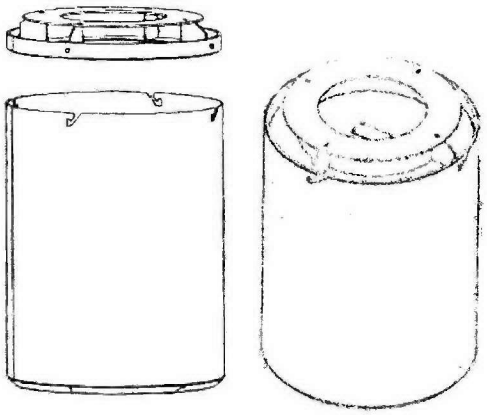

4.1.1.2.12 Filter Import Rack

Plant Item Numbers: 24590-HLW-MH-HFH-MHAN-00004

Refer to: 24590-HLW-M0D-HFH-00014, *24590-HFH-MHAN-00004 – Filter Import Rack Datasheet.*
Refer to: 24590-HLW-M0X-M40T-00010, *Mechanical Handling Equipment List for HLW System HFH.*

The function of the filter import rack is to import new HEPA filters and filter baskets from the filter lay down area into the filter cave. A floor plug in the CMA must be removed to allow passage to the filter lay down area from the CMA. The rack is sized to carry six filters (and baskets), and will be able to pass through the opened horizontal shield door when transported using the crane/power manipulator into the filter cave. [3.5.1.6]

Figure 4-13 Filter Import Rack

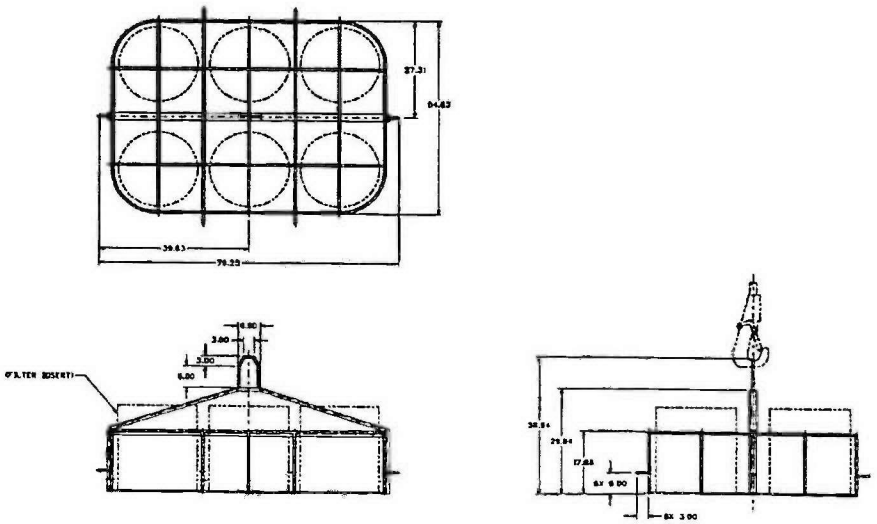

4.1.1.2.13 Power Manipulator Arm Change Fixture

Plant Item Numbers: 24590-HLW-MH-HFH-MHAN-00005

Refer to: 24590-QL-POA-MJW0-00004-04-01142, *Drawing – Fixture; Manip Stand, 4350, 24" Arms.*
Refer to: 24590-HLW-M0X-M40T-00010, *Mechanical Handling Equipment List for HLW System HFH.*

The arm change fixture allows the power manipulator arm to be remotely disengaged from the mast for maintenance. The fixture is positioned on the floor and the bridge and trolley locates the power manipulator over the fixture. The mast lowers the power manipulator into the fixture and the power manipulator is remotely disengaged from the mast.

Figure 4-14 Power Manipulator Arm Change Fixture

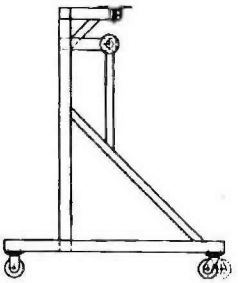

4.1.1.2.14 Power Manipulator Wrist Stand

Plant Item Numbers: 24590-HLW-MH-HFH-MHAN-00011

Refer to: 24590-QL-POA-MJW0-00004-04-01144, *Drawing – Fixture; 6000 Manip Wrist Stand.*
Refer to: 24590-HLW-M0X-M40T-00010, *Mechanical Handling Equipment List for HLW System HFH.*

The wrist change out fixture allows the power manipulator to remotely change out the wrist assembly without any external aid and to transport the wrist to other locations with a crane.

Figure 4-15 Power Manipulator Wrist Stand

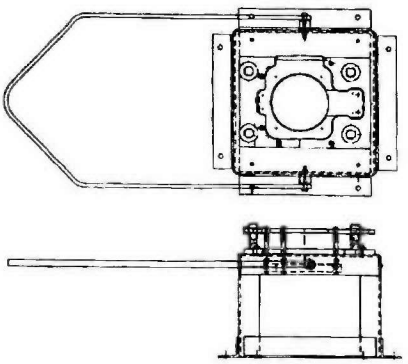

4.1.1.2.15 Power Manipulator Parallel Jaw Hand Change Fixture

Plant Item Numbers: 24590-HLW-MH-HFH-MHAN-00012

Refer to: 24590-QL-POA-MJW0-00004-04-01143, *Drawing – Fixture; MOD 5000/6000, Parallel Jaw Hand or Hook Change.*
Refer to: 24590-HLW-M0X-M40T-00010, *Mechanical Handling Equipment List for HLW System HFH.*

The power manipulator parallel jaw hand change out fixture allows the power manipulator to remotely change out either a parallel jaw hand or a hook hand, without any external aid.

Figure 4-16 Power Manipulator Parallel Jaw Hand Change Fixture

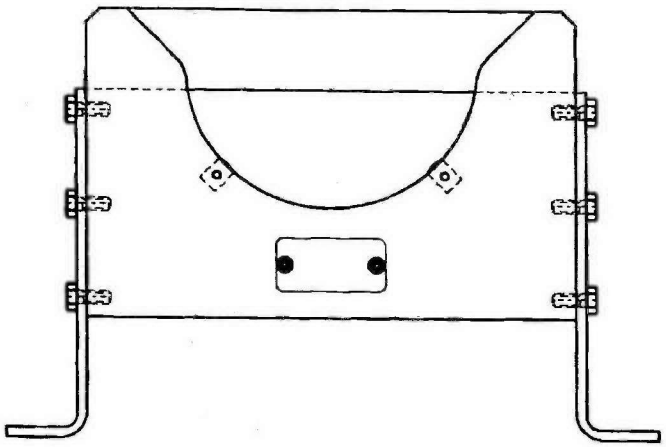

4.1.1.2.16 12 in. Impact Wrench

Plant Item Number: 24590-HLW-FH-HFH-TOOL-00001

Refer to: 24590-WTP-IID-MH-10-001, *Internal Interface Document for In-Cave Tools.*
Refer to: 24590-HLW-M0X-M40T-00010, *Mechanical Handling Equipment List for HLW System HFH.*

The filter cave crane deployed impact wrench is used for remote fastener operations in the filter cave. The impact wrench can be used with the overhead crane or hung from the power manipulator arm. The wrench is electrically powered from an outlet on the crane hook block or power manipulator arm. It is equipped with a storage and transport stand that allows the wrench to be picked in the horizontal or vertical orientation and the wrench to be reconfigured with different attachments. The stand is equipped with a series of remote studs and pockets that allow re-greasing and storage of remote fasteners as they are removed. A counterbalance weight is provided to allow longer reaches to be obtained. It can make up fasteners up to 400 ft-lb and break out fasteners up to 700 ft-lbs. The spike bar interfaces with a stop on the operated equipment that acts as a torque arm to the impact wrench. The impact wrench assembly is comprised of an outer custom body and an internal impact wrench. The body is designed for re-use if the internal impact wrench fails. The wrench assembly may be imported into the glovebox for swap out or re-greasing of the internal impact wrench. The body is designed for the 40 year facility life but the internals are essentially run to failure. [3.4.1.1.1]

Figure 4-17 Twelve Inch Impact Wrench

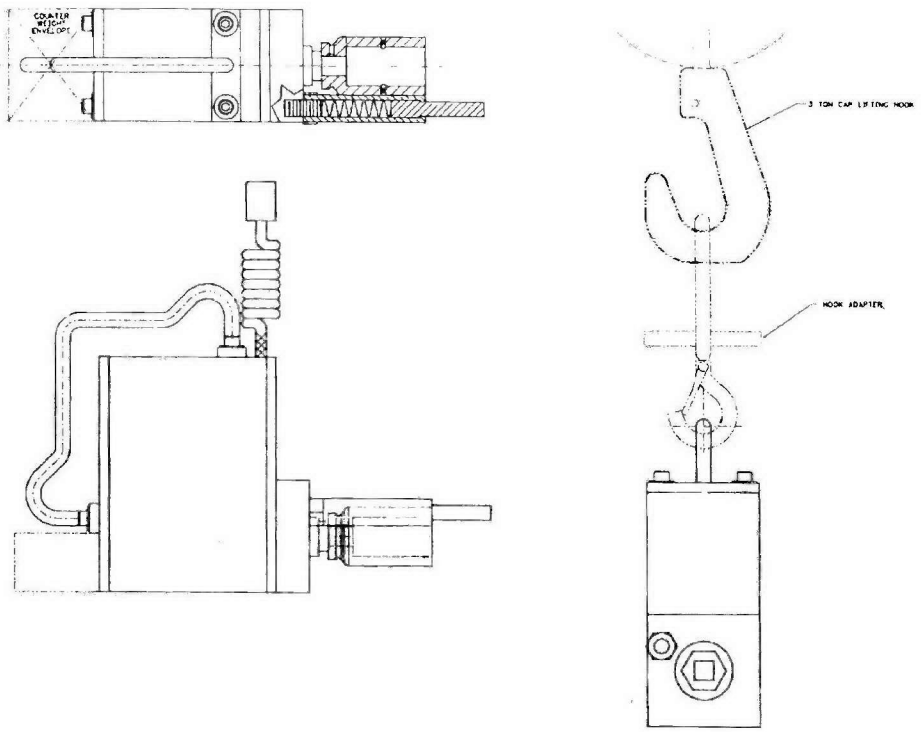

4.1.1.2.17 Power Manipulator-Deployed Nut Runner and Stand

Plant Item Number: 24590-HLW-FH-HFH-TOOL-00003 (Nut Runner)
Plant Item Number: 24590-HLW-MH-HFH-MHAN-00013 (Stand)

Refer to: 24590-WTP-IID-MH-10-001, *Internal Interface Document for In-Cave Tools*

The power manipulator-deployed nut runner is used to operate low torque, high travel remote nuts in the filter cave. The nut runner is equipped with a set of marked mechanical torque limiters to provide controlled torque of remote nuts for different applications. The nut runner is electrically powered from a tool power outlet on the manipulator. The full torque output of the nut runner is nominally 35 ft-lbs. Torque limiters with nominal set points of 10 ft-lb, 20 ft-lb and 30 ft-lb are provided. As the nut runners require different sockets and torque limiters to be attached, a purpose built stand is provided to allow reconfiguration with MSMs at a shield window station.

4.1.1.2.18 Portable Vacuum

Plant Item Numbers: 24590-HLW-FH-HFH-TOOL-00002

Refer to: 24590-WTP-IID-MH-10-001, *Internal Interface Document for In-Cave Tools.*
Refer to: 24590-HLW-M2D-HFH-00002, *HFH-TOOL-00002 – Portable Vacuum System HLW Filter Cave Datasheet.*
Refer to: 24590-HLW-M0X-M40T-00010, *Mechanical Handling Equipment List for HLW System HFH.*

A hook mounted portable vacuum system will be used to perform general cleaning operations in the filter cave. The vacuum will be deployed using the crane/power manipulator and connected to the cranes auxiliary power

outlet using the manipulator arm, or MSM at one of the window locations. The vacuum is equipped with interchangeable tools and a replaceable filter that can be remotely changed and operated using the manipulator arm. The primary function of the portable vacuum cleaner is to capture loose contamination at various locations within the filter cave. This function serves to limit the spread of contamination throughout the cave and, through potential cross contamination, the remainder of the physical plant. The material to be retrieved will include dust and other dry particulate (less than 0.25 inch in size) created during in-cave operations. [3.9.1.3]

Figure 4-18 Portable Vacuum

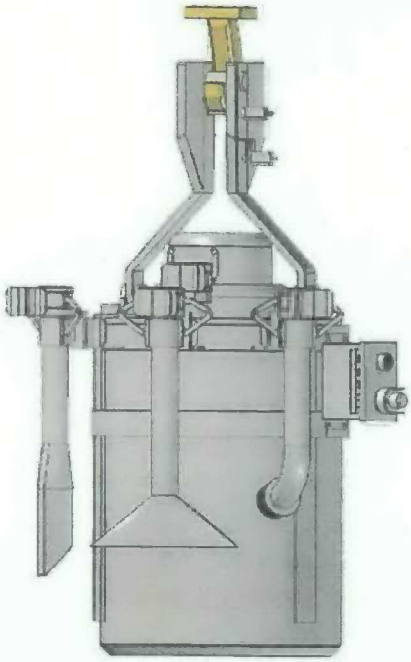

4.1.1.2.19 Seat Cleaning Tool

Plant Item Numbers: 24590-HLW-FH-HFH-TOOL-00004

Refer to: 24590-WTP-IID-MH-10-001, *Internal Interface Document for In-Cave Tools.*
Refer to: 24590-HLW-M0D-HFH-00015, *24590-HFH-TOOL-00004 – Seat Cleaning Tool Datasheet.*
Refer to: 24590-HLW-M0X-M40T-00010, *Mechanical Handling Equipment List for HLW System HFH.*

The filter seat cleaner is used to loosen and remove Blu Jel™ sealant material from the filter housing knife edge (sealing surface) located inside the HEPA filter housings in the HFH cave. The filter seat cleaning tool is set into the filter housing via the power manipulator arm and is powered by the auxiliary tool power socket on the portable vacuum cleaner.

Figure 4-19 Seat Cleaning Tool

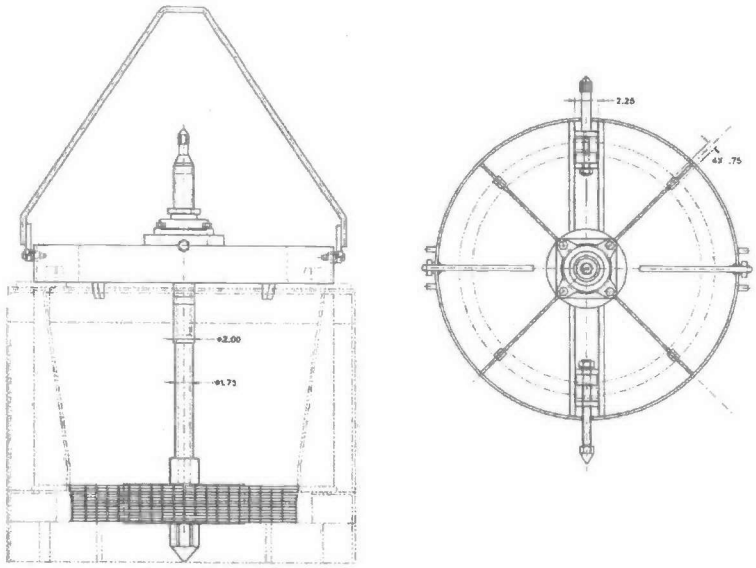

4.1.1.2.20 Power Manipulator Spray Lance (Water)

Plant Item Numbers: 24590-HLW-FH-HFH-TOOL-00010

Refer to: 24590-HLW-M0D-HFH-00045, *24590-HLW-FH-HFH-TOOL-00010 – Power Manipulator Spray Lance (Water) Datasheet.*
Refer to: 24590-HLW-M0X-M40T-00010, *Mechanical Handling Equipment List for HLW System HFH.*

The power manipulator spray lances are installed in the CMA and will be used for decontamination of equipment, primarily the removal of unwanted radiological loose surface contaminants. The spray lance will effectively remove many loose or lightly fixed contaminants on the surface, including from many tiny nooks and crannies that other methods may not be able to reach. [3.4.4.3]

4.1.1.2.21 Power Manipulator Spray Lance (Carbon Dioxide)

Plant Item Numbers: 24590-HLW-FH-HFH-TOOL-00013

Refer to: 24590-HLW-M0D-HFH-00046, *24590-HLW-FH-HFH-TOOL-00013 – Power Manipulator Spray Lance (CO2) Datasheet.*
Refer to: 24590-HLW-M0X-M40T-00010, *Mechanical Handling Equipment List for HLW System HFH.*

The power manipulator spray lances are installed in the filter cave and will be used for decontamination of equipment, primarily the removal of unwanted radiological loose surface contaminants. The CO2 spray lance will effectively remove many loose or lightly fixed contaminants on the surface, including from many tiny nooks and crannies that other methods may not be able to reach. [3.4.4.2]

4.1.1.2.22 Local Operator Interfaces and Closed Circuit Television Cameras

Refer to: 24590-HLW-J0-PTJ-00003, *HLW Vitrification System PTJ Supplemental Instr Diagram CCTV Equipment Plan At EL 14'-0"*
Refer to: 24590-HLW-J0-PTJ-00004, *HLW Vitrification System PTJ Supplemental Instr Diagram CCTV Equipment Plan At EL 37'-0"*

The designated system LOI (HFH-PNL-00004) is located on the east wall of the filter cave at window 30-SWIN-00020, adjacent to the posting port glovebox. LOIs throughout the facility are standardized to provide common operator controls, and therefore reduce human error. Each LOI has access to all the CCTV cameras throughout the filter cave and may be used to control the crane/power manipulator via the MHJ.

The filter cave is provided with two wall mounted pan/tilt/zoom color cameras (XT-3072 and XT-3073) on the east wall. A further six cameras (XT-3074, XT-3075, XT-3076, XT-3077, XT-3078, and XT-3080) are mounted on the crane/power manipulator, one of which is mounted on the wrist of the manipulator providing detailed viewing of the internal surfaces of the filter banks during filter change out.

The CMA is provided with two wall mounted pan/tilt/zoom cameras, one (XT-3106) on the north wall, and one (XT-3105) on the west wall. These will be used to monitor movement of the shield doors and movement of the crane/power manipulator into and out of the area. The cameras may also be used to monitor maintenance activities in the CMA.

Note: Cameras are part of the PTJ system, not HFH, but are used to support HFH operations. The HFH system is also used to install and remove in-cave cameras needing maintenance or replacement.

4.1.1.2.23 Filter Cave Maintenance Area Workbench

Plant Item Numbers: 24590-HLW-MZ-HFH-BENCH-00001

Refer to: 24590-HLW-M0D-HFH-00021, *24590-HLW-MZ-HFH-BENCH-00001 – Maintenance Cave Maintenance Area Workbench Datasheet.*

The bench is used in the maintenance area of the filter cave for miscellaneous maintenance activities.

Figure 4-20 Filter Cave Maintenance Area Workbench

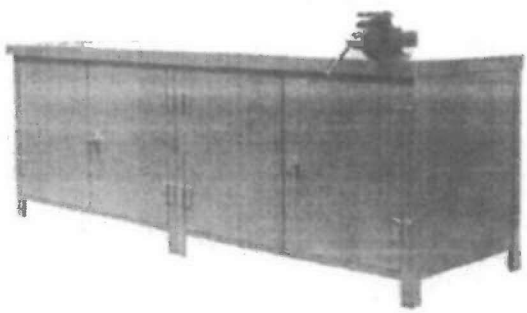

4.1.1.2.24 Filter Cave Decontamination Station

Plant Item Numbers: 24590-HLW-MH-HFH-MHAN-00010

Refer to: 24590-WTP-3PS-MQL0-T0002, *Mechanical Handling Custom Designed and Fabricated Equipment.*
Refer to: 24590-HLW-M0-HFH-00017001, *HLW Vitrification System HFH Design Proposal Drawing Decontamination Station General Arrangement.*

The decontamination station is located in the filter cave (H-0104), which is classified as C5/R5. The decontamination station limits the spread of contamination during CO_2 decontamination of filter cave equipment by diverting the sublimated CO_2 decontamination effluent into the HEPA filter banks, and it provides an exhaust plenum for the filter cave atmosphere into the filter banks. The decontamination booth is comprised of a spray shield with grate and exhaust plenum. The grate has a 500 lb capacity to support the solid waste basket. The spray shield assembly has a lifting bail which interfaces with the power manipulator crane which is used to remove the spray shield and grate from the decontamination station, if needed.

4.1.2 Boundaries and Interfaces

This section contains a listing of all interfacing systems by system number and identifies the nature of the interface.

4.1.2.1 HLW Ventilation System C5V

The HLW ventilation system provides C5 ventilation to the filter cave. HFH interfaces with system C5V by replacing the filters and assists in performing maintenance on the damper mechanisms.

4.1.2.2 WTP System DIW – Demineralized Water System

The WTP demineralized water system provides demineralized water to HFH spray lance HFH-TOOL-00010 for manual and/or remote decontamination purposes.

Refer to P&ID 24590-HLW-M6-DIW-00001002, *P&ID – HLW Demineralized Water System Demineralized Water Distribution*

4.1.2.3 HLW System HOP - Melter Offgas Treatment Process

HFH interfaces with HOP by replacing the filters and assists in performing maintenance on the damper mechanisms.

4.1.2.4 HLW System PJV - Pulse Jet Ventilation System

HFH interfaces with PJV by replacing the filters and assists in performing maintenance on the damper mechanisms.

4.1.2.5 WTP System FPW - Fire Protection Water

FPW provides fire protection to the posting port/glovebox and cable reel enclosure.

4.1.2.6 WTP System LTE - Lighting

LTE provides in-cave lighting for HFH and is maintained by HFH's in-cell remote handling equipment.

4.1.2.7 WTP System LVE - Low Voltage Power

LVE provides power to the cranes, manipulators, posting port and equipment within the CMA, sub-change, and filter lay down areas.

4.1.2.8 WTP System MHJ - Mechanical Handling Control

MHJ provides the control system for the crane/power manipulator and the horizontal and vertical shield doors.

4.1.2.9 WTP System ISA- Instrument Service Air

ISA provides service air to the CO_2 decontamination units.

4.1.2.10 WTP System PTJ - CCTV System

PTJ provides remote in-cave viewing of the Filter Cave and maintenance activities being performed in the CMA. Also, HFH equipment is used to perform maintenance on the in-cell CCTVs.

4.1.2.11 WTP System RWH - Radioactive Solid Waste Handling

HFH packages waste generated in C5V, HOP and PJV into waste (filter) baskets, and transfers the baskets and other miscellaneous (such as swabs and wipes) waste from maintenance activities into a 55 gallon drum handled by System RWH.

4.1.2.12 HLW System RLD - Radioactive Liquid Waste

RLD disposes of liquid waste collected by HFH-SUMP-00001 in the CMA. Description of the floor sump is provided in the HLW facility design description, and the RLD system design description provides description of the sump level detection equipment, piping, and appurtenances.

4.1.2.13 WTP System UPE – Uninterruptable Power Supply

The WTP uninterruptable power supply provides backup power to certain HFH equipment from a battery-backed source when normal power is not available.

4.1.3 Physical Layout and Location

4.1.3.1 Filter Cave (H-0104)

The filter cave (C5/R5) is located on elevation +0 ft on the west side of the HLW Facility. The cave has a steel deck (HP0104A) at elevation +14 ft. This deck eliminates the potential for dropping equipment to elevation +0 ft below. HEPA filter banks for the primary C5 Ventilation (C5V) system, the primary and secondary HEPA filters for the Pulse Jet Ventilation (PJV) system and the Melter Offgas Treatment Process (HOP) are located in the area. The filter banks and supporting equipment for the aforementioned systems are identical. The filter banks are not part of HFH, but are remotely maintained by HFH.

Mechanical handling equipment located in the filter cave includes a crane/power manipulator, (a multi axis unit used for all in-cave handling operations), maintenance crane, shield doors that provide shielding and contamination control between the filter cave and the CMA, an export hatch that provides access to the drum transfer tunnel (system RWH) below the filter cave on elevation –9 ft 6 in, and a decontamination station located adjacent to a shield window and an MSM (east wall).

Spent filters are packaged into filter baskets during the remote change out of a filter bank, one filter per basket. The filters are handled with a filter grapple suspended from the crane. The grapple is also used to transfer the

lidded basket to the decontamination station located near the southeast corner of the filter cave. At this station, the filter baskets and other items such as the power manipulator, tools, and the crane hook, will be decontaminated to remove loose contamination using the MSM and wipes, CO2 or the portable in-cave vacuum. Decontamination of the basket supports ALARA objectives, by minimizing the spread of contamination to system RWH drum transfer tunnel and associated equipment.

A posting port and glovebox are located in the east wall of the filter cave adjacent to a shield window, a pair of MSMs, and a tool rack positioned in-cave opposite the window. This location provides tool change capabilities for the crane/power manipulator to switch between various tools such as the filter grapple, impact wrench and portable vacuum unit. The posting port is used to introduce any small items into the cave such as wipes, swabs etc.

Wall mounted lights and wall mounted cameras are provided in the filter cave to provide illumination and general viewing of the cave and maintenance activities. Lights and cameras are also mounted on the crane/power manipulator to give specific viewing for filter bank damper operations and filter change out activities.

4.1.3.2 Crane Maintenance Area (H-0201)

A dedicated crane maintenance area (C3/R3 when the maintenance area equipment shield doors are closed and C5/R5 when the shield doors are opened) is located on elevation +15 ft at the north end of the filter cave. The CMA is equipped with a locally controlled maintenance crane located at elevation +49 ft that is used to support maintenance activities on the crane/power manipulator located below. A SPAD is located on elevation +37 ft in the wall of the CMA providing access to sub-change H-0301 via stairways and platforms.

A maintenance floor plug, (single piece plug, 6 ft-0 ft x 8 ft-0 in. opening), with removable handrail is located in the CMA floor. The plug provides access to the filter lay down area (H-0103) located on elevation +0 ft below. In the filter lay down area the new filters are loaded into the filter import rack. The floor plug and import rack are both handled using the CMA maintenance crane. The crane/power manipulator cable reel is located on the west wall of the CMA.

The CMA also includes platforms HP0201C (elevation +25 ft), HP0201D (elevation +33 ft 8 in), HP0201E (elevation +34 ft), and HP0201F (elevation +44 ft) along the north side of the cave to allow personnel access to various areas around the filter cave.

4.1.3.3 Filter Lay Down Area (H-0103)

The filter lay down Area (C2/C3/R2) is located on elevation +0 ft, directly below the CMA. Access into the area is via an architectural door located in corridor HC0102. Access into the CMA is via the previously mentioned maintenance plug. The lay down area can be used for staging of new filters, the filter import rack, or any other items such as MSMs, lights etc. that require transfer into the CMA and filter cave.

4.1.3.4 Shield Door Maintenance Room (H-0402)

The Shield Door Maintenance Room (C2/R2) is located on elevation +58 ft, directly above filter cave H-0104. Access into the area is via an architectural door located in corridor HC0413. The shield door maintenance room houses the CMA vertical door's mechanical lifting equipment.

Figure 4-21 General Filter Cave Configuration

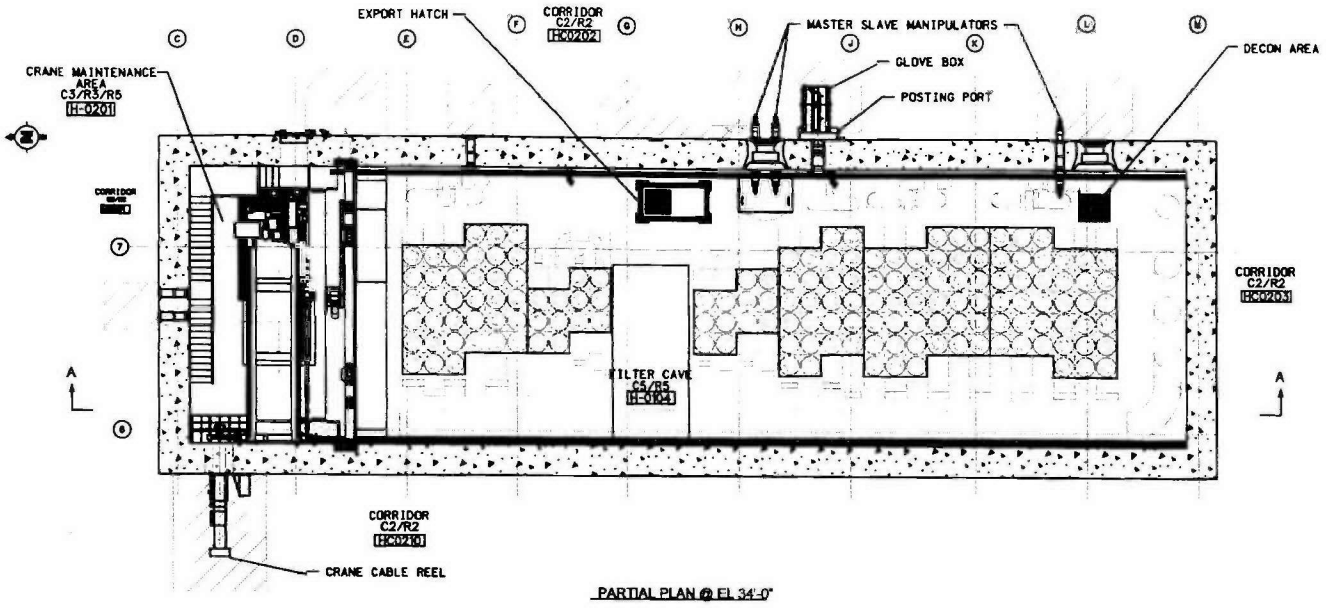

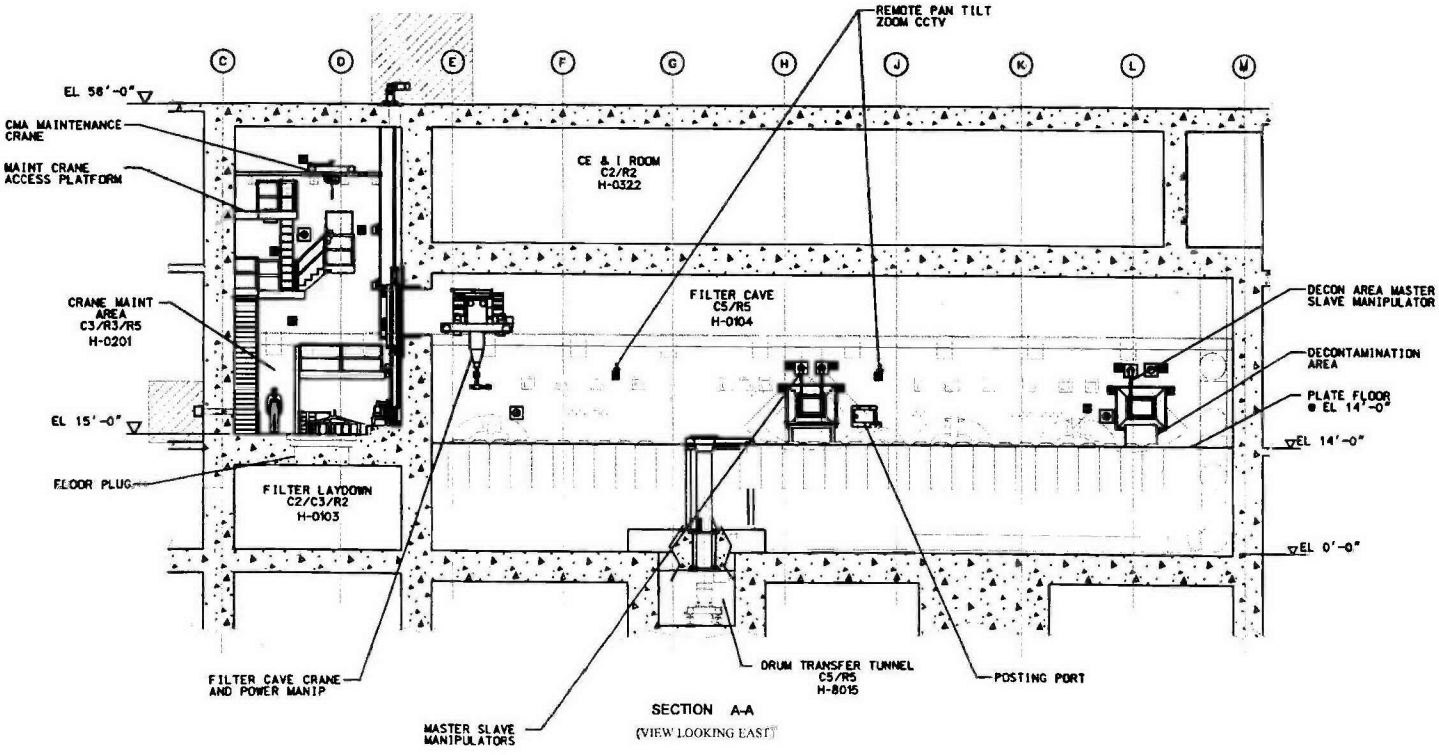

4.1.4 Principles of Operation

The HFH prepares, replaces, and exports the HEPA filters for the C5V, PJV, and HOP. The HFH starts with preparation of the new filters and filter baskets in the filter lay down area (H-0103), then moves equipment through to the crane maintenance area (H-0201) and into the filter cave (H-0104), and performs operations in the filter cave, including changing out, replacing, and exporting of spent filters to RWH.

The HFH has been designed to replace a full row of filters at the same time, which includes 5 C5V filters, 5 PJV filters, and 3 HOP filters.

These are the general steps and sequencing for filter change out in the HFH:

1. Filter import rack (containing the new filters) is moved into filter cave
2. Opened and closed appropriate dampers to re-route airflow
3. Remove door retainer assembly
4. Stage new filter
5. Remove spent filter from filter bank
6. Inspect filter seat
7. Place new filter into filter bank
8. Replace door retainer assembly
9. Decontaminate filter basket
10. Open filter cave export hatch
11. Export filter basket

See Section 4.2 for the detailed operational description. The cranes and MSMs within the HFH system are locally controlled via LOI and CCTV systems.

4.1.5 System Reliability Features

RESERVED

4.1.6 System Control Features

4.1.6.1 System Monitoring

Due to the radiological environment of the HFH system, the HFH system is monitored remotely via the CCTV system and LOIs as well as strategic shielded windows installed within the walls. Refer to Table 4-2 for all HFH equipment operating manuals that provide detailed description regarding system monitoring, interlocks and local bypasses.

4.1.6.2 System Capability and Locations

Refer to Table 4-2 for all HFH equipment operating manuals that provide detailed description regarding system capability and locations.

4.1.6.3 Automatic and Manual Actions

4.1.6.3.1 Remote Programmed Automation

There are no remote programmed automation components for mechanical handling equipment in the HFH system.

4.1.6.3.2 Packaged Equipment - Local Control Only

Local controls associated with HFH system packaged equipment are identified in Table 4-2.

Table 4-2 Packaged Equipment Local Controls

Equipment No.	Instrument No.	Properties	Function	Remarks
24590-HLW-MJ-HFH-CRN-00001 (Maintenance crane)	Refer to vendor operating manual 24590-CM-POA-MJKG-00002-51-00012	N/A	Refer to vendor operating manual 24590-CM-POA-MJKG-00002-51-00012	None
24590-HLW-DD-HFH-TWDVC-00003 and 24590-HLW-M0-HFH-GB-00001 (Tool Posting Port and Glovebox)	Refer to vendor operating manual 24590-QL-POA-M000-00002-TBD	N/A	Refer to vendor operating manual 24590-QL-POA-M000-00002-TBD	None
24590-HLE-MJ-HFH-MANIP-00003, 00004, & 00005 (Master Slave Manipulators)	Refer to vendor operating manual 24590-QL-POA-MJW0-00003-01-00004	N/A	Refer to vendor operating manual 24590-QL-POA-MJW0-00003-01-00004	None

4.1.6.4 Setpoints and Ranges

Refer to the appropriate operating manual for the setpoints and ranges applicable to the equipment.

4.1.6.5 Interlocks, Bypasses, and Permissives

HFH utilizes control system interlocks and permissives to provide accident protection for major equipment. Refer to the mechanical sequence diagram (24590-HLW-M1-HFH-00001) for further details on interlocks.

For the purposes of the HLW filter cave handling system, major interlocked equipment is as follows:

Note: There are no SS or SC interlocks or permissives in HFH.

4.1.6.5.1 Filter Cave Shield Doors

- The horizontal shield door will not open or close unless the vertical shield door signals "closed." [3.10.1.4.2]
- The vertical shield door will not open or close unless the horizontal shield door signals "open." [3.10.1.4.3]

4.1.6.5.2 Glovebox

- The outer airlock door will not unlock unless the inner airlock door signals "closed."
- The inner airlock door will not unlock unless the outer airlock door signals "closed" and the posting port out-cave shield door signals "closed" and the transport tray is in the retracted position.

- The transport tray will not travel between the retracted and monitoring positions unless the posting port in-cave shield door signals "closed" and "locked" and the inner airlock door signals "locked", and the posting port gamma monitor does not read "high", and the posting port out-cave shield door signals "opened."
- The transport tray will not travel between the monitoring position and the extended position unless the posting port in-cave shield door signals "opened" and the posting port out-cave shield door signals "closed."
- No operations of the glovebox will be permitted when the safety light curtain is obstructed.

4.1.6.5.3 Posting Port

- The posting port out-cave shield door will not unlock unless the posting port in-cave shield door signals "closed" and "locked", the glovebox inner airlock door signals "locked", the transport tray signals the "retracted" or "monitored" position, and the gamma monitor does not read "high." [3.10.1.4.6]
- The posting port in-cave shield door will not unlock unless the out-cave shield door signals "closed", and transport tray signals the monitoring position. [3.10.1.4.6]

4.1.6.5.4 Filter Cave Crane/Power Manipulator

- The filter cave crane/power manipulator operates within controlled zones. Away from the perimeter of the filter cave, variable speed is possible. Only slow speed is possible around the perimeter of the filter cave, in the CMA, and near the shield doors.
- The crane is interlocked to prevent travel to/from the CMA unless the trolley is lined up with the opening of the horizontal shield door, the hoist is at "High" and the manipulator is at "High" position.
- The filter cave crane/power manipulator crane cable reeling system is interlocked to the motor drive control for the filter cave crane.
- The hoist travel is interlocked with "high" and "high-high" limit switches.

4.1.6.5.5 Filter Cave Maintenance Area Crane

- The filter cave maintenance area crane operates within a control zone. Two speed motors drive the bridge and trolley. Both high and low speeds are capable throughout the crane maintenance area. Limit switches stop the bridge and trolley at the extent of travel in all directions.
- The hoist travel is interlocked with "high" and "high-high" limit switches.

4.2 Operations

RESERVED

4.2.1 Initial Configuration (Pre-startup)

RESERVED

4.2.2 System Startup

RESERVED

4.2.3 Normal Operations

RESERVED

4.2.4 Off-Normal Operations

RESERVED

4.2.5 System Shutdown

RESERVED

4.2.6 Safety Management Programs and Administrative Controls

RESERVED

4.3 Testing and Maintenance

RESERVED

4.3.1 Temporary Configurations

RESERVED

4.3.2 TSR-Required Surveillances

RESERVED

4.3.3 Non-TSR Inspections and Testing

RESERVED

4.3.4 Maintenance

RESERVED

4.4 Supplemental Information

RESERVED

5 References and Design Documents List

5.1 Source / Basis References

Document Number	Rev	Title	Text Reference
24590-WTP-DB-ENG-01-001	2	Basis of Design	BOD
24590-HLW-RPT-ESH-01-001	5	Preliminary Fire Hazards Analysis for the High-Level Waste Building	PFHA-HLW
24590-WTP-RPT-OP-01-001	5	Operations Requirements Document	ORD
24590-WTP-PSAR-ESH-01-002-01	5D	Preliminary Documented Safety Analysis to Support Construction Authorization; General Information	PDSA - General

Document Number	Rev	Title	Text Reference
24590-WTP-PSAR-ESH-01-002-04	5F	Preliminary Documented Safety Analysis to Support Construction Authorization; HLW Facility Specific Information	PDSA - HLW Facility
24590-WTP-SRD-ESH-01-001-02	7F	Safety Requirements Document, Volume II	SRD
DE-AC27-01RV14136	M349	DOE/BNI Hanford Tank Waste Treatment and Immobilization Plant Contract	WTP Contract

5.2 Other References

Document Number	Rev	Title
24590-HLW-M0X-M40T-00010	0	Mechanical Handling Equipment List for HLW System HFH
24590-HLW-U0D-W16T-00001	1	HLW Room Environment Data Sheet
24590-WTP-3DP-G04B-00046	31	Engineering Drawings
24590-WTP-3DP-G04B-00093	5	System and Facility Design Descriptions
24590-WTP-GPG-ENG-033	2	Evaluation for Seismic Interaction Effects
24590-WTP-GPG-ENG-0161	0	Technical Requirements Management
24590-WTP-GPG-ENG-0170	6	Impact Evaluation
24590-WTP-IID-MH-10-001	0	Internal Interface Document for In-Cave Tools
24590-WTP-PL-RACT-RT-0001	0	WTP Remotability Verification Plan
24590-WTP-RPT-ENG-01-001	06D	Technical Baseline Description
29 CFR 1910	N/A	Code of Federal Regulations, Occupational Safety and Health Administration
AISC M016	N/A	Manual of Steel Construction – Allowable Stress Design
ANSI/AISC N690	N/A	Specification for the Design, Fabrication, and Erection of Steel Safety-Related Structures for Nuclear Facilities
ASTM E119	N/A	Standard Test Methods for Fire Tests of Building Construction and Materials
DOE-STD-1020-94	N/A	Natural Phenomena Hazards Design and Evaluation Criteria for Department of Energy Facilities
DOE-STD-1066-97	N/A	Fire Protection Design Criteria
IBC 2000	N/A	International Building Code
IESNA RP-7	N/A	Industrial Lighting
NFPA 801-2003	N/A	Standard for Fire Protection for Facilities Handling Radioactive Materials
Calculations		
24590-HLW-S0C-S15T-00028	B	HLW Crane Drop Analysis

Document Number	Rev	Title
Engineering Specifications		
24590-HLW-3PS-MX00-T0001	003	QL Shielded Personnel Access Doors
24590-WTP-3PS-ADDC-T0002	003	Transfer Hatches, Hatch Drives, and Floor Penetration Liners
24590-WTP-3PS-ADDH-T0006	003	QL Crane Maintenance Shield Doors for HLW and PTF
24590-WTP-3PS-HCYT-T0002	000	HLW and PTF Solid Waste, Filter, and Decontamination Baskets
24590-WTP-3PS-M000-T0006	005	WTP Facility Posting Port
24590-WTP-3PS-M000-T0007	004	WTP Facility Posting Port Glovebox
24590-WTP-3PS-M000-T0012	002	Master Slave Manipulators for PTF, HLW, LAW and LAB
24590-WTP-3PS-MJKG-T0002	008	CMAA74 Top Running & Under Running Single Girder Electric Overhead Traveling Cranes
24590-WTP-3PS-MJKG-T0004	005	High Integrity CMAA70 Cranes with Power Manipulators
24590-WTP-3PS-MQL0-T0002	002	Mechanical Handling Custom Designed and Fabricated Equipment
24590-WTP-3PS-MQL0-T0003	001	Special Grapples and Lifting Devices
HLW Building Architectural Room Finish Schedules		
24590-HLW-A5-A19T-05201001	003	HLW Vitrification Building Architectural Room Finish Schedule EL. 0'-0"
24590-HLW-A5-A19T-05202001	001	HLW Vitrification Building Architectural Room Finish Schedule EL. 14'-0"
HLW Building Equipment Location Drawings		
24590-HLW-J0-PTJ-00003	003	HLW Vitrification System PTJ Supplemental Instr Diagram CCTV Equipment Plan At EL 14'-0"
24590-HLW-J0-PTJ-00004	001	HLW Vitrification System PTJ Supplemental Instr Diagram CCTV Equipment Plan At EL 37'-0"
24590-HLW-P1-P23T-00203	004	HLW Vitrification Building Equipment Location Plan at EL 14'-0" Area 203
24590-HLW-P1-P23T-00208	004	HLW Vitrification Building Equipment Location Plan at EL 14'-0" Area 208
24590-HLW-P1-P23T-00213	004	HLW Vitrification Building Equipment Location Plan at EL 14'-0" Area 213
24590-HLW-P1-P23T-00303	003	HLW Vitrification Building Equipment Location Plan at EL 37'-0" Area 303
24590-HLW-P1-P23T-00308	003	HLW Vitrification Building Equipment Location Plan at EL 37'-0" Area 308
24590-HLW-P1-P23T-00313	004	HLW Vitrification Building Equipment Location Plan at EL 37'-0" Area 313
24590-HLW-P1-P23T-00403	001	HLW Vitrification Building Equipment Location Plan at EL 58'-0" Area 403
HFH Equipment Drawings		
24590-HLW-M0-HFH-00017001	000	HLW Vitrification System HFH Design Proposal Drawing Decontamination Station General Arrangement

Document Number	Rev	Title
HFH Equipment Data Sheets		
24590-HLW-M0D-HFH-00007	00A	HFH-MHAN-00006 – Filter Cave Tool Rack Datasheet
24590-HLW-M0D-HFH-00014	000	24590-HFH-MHAN-00004 – Filter Import Rack
24590-HLW-M0D-HFH-00015	000	24590-HFH-TOOL-00004 – Seat Cleaning Tool
24590-HLW-M0D-HFH-00021	000	24590-HLW-MZ-HFH-BENCH-00001 – Maintenance Cave Maintenance Area Workbench
24590-HLW-M0D-HFH-00045	001	24590-HLW-FH-HFH-TOOL-00010 – Power Manipulator Spray Lance (Water)
24590-HLW-M0D-HFH-00046	001	24590-HLW-FH-HFH-TOOL-00013 – Power Manipulator Spray Lance (CO2)
24590-HLW-M2D-HFH-00002	000	HFH-TOOL-00002 – Portable Vacuum System HLW Filter Cave
Piping and Instrumentation Diagrams		
24590-HLW-M6-DIW-00001002	000	P&ID – HLW Demineralized Water System Demineralized Water Distribution
Mechanical Handling Diagrams		
24590-HLW-M1-HFH-00001	003	Mechanical Sequence Diagram (MSD) for HLW Vitrification System HFH Filter Cave Handling
HFH Equipment Vendor Documents		
24590-QL-POA-MJW0-00004-04-01142	00F	Drawing – Fixture; Manip Stand, 4350, 24" Arms
24590-QL-POA-MJW0-00004-04-01143	00C	Drawing – Fixture; MOD 5000/6000, Parallel Jaw Hand or Hook Change
24590-QL-POA-MJW0-00004-04-01144	00I	Drawing – Fixture; 6000 Manip Wrist Stand
24590-CM-POA-MJKG-00002-51-00012	00B	Manual - Operating, Parts and Maintenance Manual - 7.5 Ton Top Running Single Girder Crane - CMAA Class C - Wire Rope Hoist - Radio Operated
24590-QL-POA-MJW0-00003-01-00004	00C	Manual - Part A - Model RE-T Master-Slave Manipulator Installation, Operating, and Maintenance Manual with Maintenance Equipment

5.3 System Design Documents

Document Number	Title
Mechanical Handling Diagrams	
24590-HLW-M1-HFH-00001	Mechanical Sequence Diagram (MSD) for HLW Vitrification System HFH Filter Cave Handling
24590-HLW-M7-HFH-00001001	HLW Vitrification System HFH Mechanical Handling Diagram Filter Cave Handling
24590-HLW-M7-HFH-00001002	HLW Vitrification System HFH Mechanical Handling Diagram Filter Cave Handling
24590-HLW-M7-HFH-00001003	HLW Vitrification System HFH Mechanical Handling Diagram Filter Cave Handling

Document Number	Title
24590-HLW-M7-HFH-00001004	HLW Vitrification System HFH Mechanical Handling Diagram Filter Cave Handling
24590-HLW-M7-HFH-00001005	HLW Vitrification System HFH Mechanical Handling Diagram Filter Cave Handling
System Block Diagrams	
24590-HLW-J1-HFH-00001	HLW Vitrification MH System HFH System Block Diagram Filter Cave Handling System
24590-HLW-J1-HFH-00002	HLW Vitrification MH System HFH System Block Diagram Filter Cave Handling System
24590-HLW-J1-HFH-00003	HLW Vitrification MH System HFH System Block Diagram Filter Cave Handling System
24590-HLW-J1-HFH-00004	HLW Vitrification MH System HFH System Block Diagram Filter Cave Handling System
General Arrangement / Equipment Location Drawings	
24590-HLW-P1-P01T-00001	HLW Vitrification Building General Arrangement Plan at El -21'-0"
24590-HLW-P1-P01T-00002	HLW Vitrification Building General Arrangement Plan at EL 0'-0"
24590-HLW-P1-P01T-00003	HLW Vitrification Building General Arrangement Plan at EL 14'-0"
24590-HLW-P1-P01T-00004	HLW Vitrification Building General Arrangement Plan at EL 37'-0"
24590-HLW-P1-P01T-00005	HLW Vitrification Building General Arrangement Plan at EL 58'-0"
24590-HLW-P1-P01T-00008	HLW Vitrification Building General Arrangement Sections A-A, B-B & C-C
24590-HLW-P1-P01T-00011	HLW Vitrification Building General Arrangement Sections J-J & K-K
24590-HLW-P1-P23T-00103	HLW Vitrification Building Equipment Location Plan at EL 0'-0" Area 103
24590-HLW-P1-P23T-00108	HLW Vitrification Building Equipment Location Plan at EL 0'-0" Area 108
24590-HLW-P1-P23T-00113	HLW Vitrification Building Equipment Location Plan El. 0'-0" / Area 113
24590-HLW-P1-P23T-00203	HLW Vitrification Building Equipment Location Plan at EL 14'-0" Area 203
24590-HLW-P1-P23T-00208	HLW Vitrification Building Equipment Location Plan at EL 14'-0" Area 208
24590-HLW-P1-P23T-00213	HLW Vitrification Building Equipment Location Plan at EL 14'-0" Area 213
24590-HLW-P1-P23T-00303	HLW Vitrification Building Equipment Location Plan at EL 37'-0" Area 303
24590-HLW-P1-P23T-00308	HLW Vitrification Building Equipment Location Plan at EL 37'-0" Area 308
24590-HLW-P1-P23T-00313	HLW Vitrification Building Equipment Location Plan at EL 37'-0" Area 313
24590-HLW-P1-P23T-00403	HLW Vitrification Building Equipment Location Plan at EL 58'-0" Area 403
24590-HLW-P1-P23T-00408	HLW Vitrification Building Equipment Location Plan at EL 58'-0" Area 408
24590-HLW-P1-P23T-00413	HLW Vitrification Building Equipment Location Plan at EL 58'-0" Area 413
Fire Barrier Drawings	
24590-HLW-U1-60-00001	HLW Vitrification Building Fire Barrier Drawing Plan at El -21'-0"
24590-HLW-U1-60-00002	HLW Vitrification Building Fire Barrier Drawing Plan at El 0'-0"
24590-HLW-U1-60-00003	HLW Vitrification Building Fire Barrier Drawing Plan at El 14'-0"

Document Number	Title
24590-HLW-U1-60-00004	HLW Vitrification Building Fire Barrier Drawing Plan at El 37'-0"
24590-HLW-U1-60-00005	HLW Vitrification Building Fire Barrier Drawing Plan at El 58'-0"
HFH Equipment Drawings	
24590-HLW-M0-HFH-00001001	Filter Cave/Crane Maintenance Area Shield Doors Arrangement
24590-HLW-M0-HFH-00001002	Filter Cave/Crane Maintenance Area Shield Doors Sections
24590-HLW-M0-HFH-00002	Filter Cave/Crane Maintenance Area Shield Door Encast Plates
24590-HLW-M0-HFH-00014	Filter Seat Cleaning Tool Assembly
24590-HLW-M0-HFH-00016001	Filter Cave Tool Rack
24590-HLW-M0-HFH-00017001	HLW Vitrification System HFH Design Proposal Drawing Decontamination Station General Arrangement
24590-HLW-M0-M10T-00079003	Standard Encast Liner Schedule System HSH, HMP, HMH, HFH, and HRH
24590-HLW-MQ-HFH-00001001	Filter Cave Export Hatch Arrangement
24590-HLW-MQ-HFH-00001002	Filter Cave Export Hatch Assembly
24590-HLW-MQ-HFH-00001003	Filter Cave Export Hatch Floor Penetration Liner
HFH Equipment Data Sheets	
24590-HLW-M0D-HFH-00007	HFH-MHAN-00006 – Filter Cave Tool Rack Datasheet
24590-HLW-M0D-HFH-00008	Filter Cave Maintenance Area Floor Plug
24590-HLW-M0D-HFH-00010	24590-HLW-MJ-HFH-CRN-00002 – Overhead Mast Power Manipulator with Auxiliary Hoist
24590-HLW-M0D-HFH-00014	24590-HFH-MHAN-00004 – Filter Import Rack
24590-HLW-M0D-HFH-00015	24590-HFH-TOOL-00004 – Seat Cleaning Tool
24590-HLW-M0D-HFH-00020	Maintenance Cave Tool Cabinet
24590-HLW-M0D-HFH-00021	24590-HLW-MZ-HFH-BENCH-00001 – Maintenance Cave Maintenance Area Workbench
24590-HLW-M0D-HFH-00038	24590-HLW-MJ-HFH-CRN-00001 – Filter Cave Maintenance Crane (Room H-0201)
24590-HLW-M0D-HFH-00045	24590-HLW-FH-HFH-TOOL-00010 – Power Manipulator Spray Lance (Water)
24590-HLW-M0D-HFH-00046	24590-HLW-FH-HFH-TOOL-00013 – Power Manipulator Spray Lance (CO2)
24590-HLW-M2D-HFH-00002	HFH-TOOL-00002 – Portable Vacuum System HLW Filter Cave
24590-HLW-MHD-HFH-00002	24590-HLW-MH-HFH-MHAN-00001 – Cable Reeling System
24590-HLW-MXD-30-00027	24590-HLW-AD-HFH-DOOR-00004 - Shielded Personnel Access Door (3") - Crane Maintenance Area
Life Cycle Documents	
24590-HLW-PISW-ENG-05-0007	Life Cycle Document for Non Modifiable Configurable Firmware (NMCF) Acquired With Cranes, Bridge CMAA74 (MH087)
24590-HLW-PISW-ENG-06-0001	Life Cycle Document for Acquired Software Packaged With HLW/PTF Posting Port Equipment

Document Number	Title
HFH Equipment Vendor Documents	
24590-CM-POA-MJKG-00002-40-01	Drawing – 7 1/2 Ton T/R Single Girder Crane #2779 – General Arrangement
24590-QL-POA-ADDB-00001-09-25	Door Assembly – Left Hand Shielded Personnel Access Door 3 Inches Thick
24590-QL-POA-ADDH-00003-06-00227	HLW Hatches Standardized Transfer Hatch Weldment Assembly
24590-QL-POA-ADDH-00007-05-01320	HLW Vitrification System HFH Filter Cave Crane Maintenance Horizontal Shield Door – Field Door Assembly
24590-QL-POA-ADDH-00007-05-01322	HLW Vitrification System HFH Filter Cave Crane Maintenance Vertical Shield Door – Field Door Assembly
24590-QL-POA-MJW0-00004-04-01142	Drawing – Fixture; Manip Stand, 4350, 24" Arms
24590-QL-POA-MJW0-00004-04-01143	Drawing – Fixture; MOD 5000/6000, Parallel Jaw Hand or Hook Change
24590-QL-POA-MJW0-00004-04-01144	Drawing – Fixture; 6000 Manip Wrist Stand
24590-QL-POA-MJW0-00005-07-00129	6T Aux Hoist Filter Cave Support
24590-QL-POA-MJW0-00005-07-00505	General Arrangement of HFH Cable Reeling Spool
24590-CM-POA-MJKG-00002-51-00012	Manual - Operating, Parts and Maintenance Manual - 7.5 Ton Top Running Single Girder Crane - CMAA Class C - Wire Rope Hoist - Radio Operated
24590-QL-POA-MJW0-00003-01-00004	Manual - Part A - Model RE-T Master-Slave Manipulator Installation, Operating, and Maintenance Manual with Maintenance Equipment

Appendix A - Test Objectives, Conditions, and Acceptance Criteria

NOTE: Demonstrations and Tests identified in this appendix are preliminary, pending completion of design activities. They are established to document the flowdown of verification needs established in Section 3 but are not sufficiently detailed for development of specific system and equipment test plans. They may be used for general planning only. This note is to be removed when design is sufficiently progressed to provide the details needed to establish the basis for testing and acceptance criteria. **[HOLD]**

Requirement (para #)	Test (T) or Demo (D)	COM or SU	Plan (including SSCs)	Acceptance Criteria (TAC or GTC)*	Notes/Comments	Test Conditions
3.4.4.1	D	SU/COM	Demonstrate remote removal and installation of in-cave equipment and components requiring maintenance or replacement in accordance with 24590-WTP-PL-RACT-RT-0001, *WTP Remotability Verification Plan.* CTN: HFH-CRN-00002	**(GTC)** Successful remote removal and re-installation of all of the HFH equipment/ components listed in the test plans.		
3.4.4.7	D	SU/COM	Demonstrate the capability to stop HFH cranes with dedicated emergency stops. CTN: HFH-CRN-00001 and HFH-CRN-00002	**(GTC)** When the emergency stop button is contacted the equipment will stop operating, in a safe condition.		
3.4.4.8	D	SU/COM	Demonstrate the emergency stop reporting and reset functions. CTN: HFH-CRN-00001 and HFH-CRN-00002	**(GTC)** Successful reporting of the emergency stop position and resetting of the emergency stop.		
3.5.1.4	D	SU/COM	Demonstrate recovery of the filter cave crane in accordance with 24590-WTP-PL-RACT-RT-0001. CTN: HFH-CRN-00002	**(GTC)** The filter cave crane is successfully recovered to a maintenance area.		
3.5.1.5	D	SU/COM	Demonstrate ability to actuate C5V, HOP, and PJV dampers; remove and replace C5V, HOP, and PJV HEPA filters; and transfer spent filters to RWH in lidded baskets, in accordance with 24590-WTP-PL-RACT-RT-0001. CTN: HFH-CRN-00002, 30-MHAN-00019, HFH-TOOL-00003, HFH-TOOL-00005	**(GTC)** The filter cave crane is successful accessing the filter cave equipment and completing various HFH functions.		
3.5.1.6	D	SU/COM	Demonstrate transport of filter import rack from filter staging area into the filter cave. CTN: HFH-CRN-00001, HFH-CRN-00002, HFH-MHAN-00004	**(GTC)** Successful transport of filter import rack from filter staging area into the filter cave.		
3.5.1.6	D	SU/COM	Demonstrate the ability to remove and replace the filter cave crane maintenance area floor plug using the filter cave crane and using the maintenance crane. CTN: HFH-CRN-00001, HFH-CRN-00002	**(GTC)** Successful removal and replacement of the filter cave crane maintenance area floor plug.		

Requirement (para #)	Test (T) or Demo (D)	COM or SU	Plan (including SSCs)	Acceptance Criteria (TAC or GTC)*	Notes/Comments	Test Conditions
3.5.1.7	D	SU/COM	Demonstrate ability to remove and install in-cave cameras in accordance with 24590-WTP-PL-RACT-RT-0001. CTN: HFH-CRN-00002	**(GTC)** Successful removal and installation of in-cave cameras through use of filter cave crane.		May be performed as part of demonstration of Section 3.4.4.1.
3.5.1.8	D	SU/COM	Demonstrate ability to access, remove and install the damper internal assemblies in accordance with 24590-WTP-PL-RACT-RT-0001. CTN: HFH-CRN-00002, HFH-TOOL-00001	**(GTC)** The filter cave crane demonstrates the successful capability to access, remove and install the damper internal assemblies.		May be performed as part of demonstration of Section 3.4.4.1.
3.5.4.1	D	SU/COM	Demonstrate the crane brakes automatically set when the power is off. CTN: HFH-CRN-00001, HFH-CRN-00002	**(GTC)** The crane brakes set when the power is off.		
3.5.4.2	T	SU/COM	Measure illumination levels below the filter cave crane to verify that the combined crane and facility lighting complies with IESNA Standard RP-7.	**(GTC)** The lighting below the filter cave crane complies with IESNA Standard RP-7.		
3.5.4.7	D	SU/COM	Demonstrate change-out of the various end effectors and tools in accordance with 24590-WTP-PL-RACT-RT-0001. CTN: HFH-CRN-00002, HFH-TOOL-00001, HFH-TOOL-00002, HFH-TOOL-00004, HFH-TOOL-00005, HFH-MHAN-00005, HFH-MHAN-00006, HFH-MHAN-00011, HFH-MHAN-00012	**(GTC)** The filter cave crane demonstrates the capability to change-out various end effectors and tools.		May be performed as part of demonstration of Section 3.4.4.1.
3.6.1.2	T	SU/COM	Test SPAD installation for full sealing around the aperture perimeter. CTN: HFH-DOOR-00004	**(GTC)** The SPAD fully seals around the aperture perimeter.		
3.6.4.3	D	SU/COM	Demonstrate recovery capability of shield doors in accordance with 24590-WTP-PL-RACT-RT-0001. Shield Door CTNs: HFH-DOOR-00001 and HFH-DOOR-00002 Recovery Device CTNs: HSH-RCVY-00003 and HSH-RCVY-00015 (vertical door recovery), HSH-RCVY-00006 (horizontal door recovery)	**(GTC)** Successful closing of shield doors using recovery devices.		The power supply to the shield doors will be isolated for recovery demonstration.
3.6.4.5	D	SUP/SU/COM	Demonstrate the maintenance equipment shield doors remain in place on loss of power. CTN: HFH-DOOR-00001, HFH-DOOR-00002	**(GTC)** The shield doors remain in place when the power is off.		
3.7.1.1	D	SU/COM	Demonstrate the posting port has the capability to import and export swabs. CTN: HFH-TWDVC-00003	**(GTC)** The posting port demonstrates the capability to import and export swabs to the swabbing manipulator.		
3.7.1.2	D	SU/COM	Demonstrate the ability to import and use portable instruments within the glovebox. CTN: HFH-GB-00001	**(GTC)** Portable instruments are able to be used in the glovebox.	Measurement is performed in the glovebox.	

Requirement (para #)	Test (T) or Demo (D)	COM or SU	Plan (including SSCs)	Acceptance Criteria (TAC or GTC)*	Notes/Comments	Test Conditions
3.7.4.1	T	SU/COM	Verify that, in conjunction with normal operation of the facility ventilation systems, the HFH glovebox maintains a negative pressure relative to the room it resides in. CTN: HFH-GB-00001	**(TAC)** The glovebox is able to maintain a negative pressure relative to the room in which it resides.		This includes with outer glovebox door open.
3.8.1.1	D	SU/COM	Demonstrate transfer of swabs to and from the posting port transport tray by the MSM, and handling of swab for swabbing operations. Posting Port CTN: HFH-TWDVC-00003 MSM CTN: HFH-MANIP-00003, 00004, and 00005	**(GTC)** The posting port demonstrates the capability to transfer and handling of swabs using the MSM.	This only includes the MSM adjacent to the posting port. All MSM CTNs are provided here, since the equipment location drawings do not identify which MSM CTN will be adjacent to the posting port.	
3.8.4.1	D	SU/COM	Demonstrate removal of the Master/slave manipulators (MSM). CTN: HFH-MANIP-00003, 00004, and 00005	**(GTC)** The MSMs are successfully removed from the filter cave and transported to decontamination/maintenance areas and placement in a storage area.		May be performed as part of demonstration of Section 3.4.4.1.
3.9.1.1	D	SU/COM	Demonstrate ability to handle HEPA filters, filter disposal baskets, basket lids, and filter bank doors. CTN: HFH-CRN-00002, HFH-TOOL-00005, 30-MHAN-00019	**(GTC)** The filter cave crane is capable of handling HEPA filters, filter disposal baskets, basket lids, and filter bank doors.		May be performed as part of demonstration of Section 3.5.1.5.
3.9.1.2	D	SU/COM	Demonstrate ability to actuate the C5V, HOP, and PJV HEPA filter bank dampers, including viewing of damper position. CTN: HFH-CRN-00002, HFH-TOOL-00003	**(GTC)** The filter cave crane is capable of actuating the C5V, HOP, and PJV filter bank dampers. Damper position indicator shows fully open or fully closed.		
3.9.1.3	D	SU/COM	Demonstrate handling and operation of portable vacuum, including the ability to remove filter seat debris. CTN: HFH-CRN-00002, HFH-TOOL-00002	**(GTC)** A portable vacuum is successfully operated to remove filter seat debris.		May be performed in conjunction with demonstration of Section 3.9.1.4.
3.9.1.3	D	SU/COM	Demonstrate ability to dispose of the vacuum. CTN: HFH-TOOL-00002	**(GTC)** A portable vacuum successfully fits into a lidded filter basket and transferred to the 55gal. drum on the RWH boggie.		
3.9.1.4	D	SU/COM	Demonstrate operation of the filter seat cleaning end effector or tool. CTN: HFH-CRN-00002, HFH-TOOL-00004, HFH-TOOL-00003	**(GTC)** The filter cave crane is capable of filters seat cleaning.		

Requirement (para #)	Test (T) or Demo (D)	COM or SU	Plan (including SSCs)	Acceptance Criteria (TAC or GTC)*	Notes/Comments	Test Conditions
3.9.1.5	D	SU/COM	Demonstrate ability to remove and install in-cave lights in accordance with 24590-WTP-PL-RACT-RT-0001. CTN: HFH-CRN-00002	**(GTC)** The filter cave crane is capable of removing and installing in-cave lights.		
3.9.1.6	D	SU/COM	Demonstrate ability to engage the damper housing nuts to access the damper internal assemblies. Filter Cave Crane CTN: HFH-CRN-00002 Impact Wrench CTN: HFH-TOOL-00001	**(GTC)** The filter cave crane is capable of accessing the damper internal assemblies through the use of an impact wrench.		May be performed as part of demonstration of Sections 3.4.4.1 and 3.5.1.8.
3.9.1.7	D	SU/COM	Demonstrate capability to replace the HEPA filter bank door seals in accordance with 24590-WTP-PL-RACT-RT-0001. CTN: HFH-CRN-00002	**(GTC)** The filter cave crane is capable of replacing the C5V, HOP, and PJV filter bank door seals.		
3.9.1.8	D	SU/COM	Demonstrate capability to remotely remove and reinstall a filter basket lid in accordance with 24590-WTP-PL-RACT-RT-0001.	**(GTC)** The filter basket lid is remotely removed and reinstalled successfully.		
3.9.4.1	D	SU/COM	Demonstrate the capability to use a MSM to manually disengage the grapple from a filter, filter basket lid, or filter bank door. MSM CTN: HFH-MANIP-00003, 00004, and 00005 Filter Grapple CTN: HFH-TOOL-00005	**(GTC)** MSM disengages grapple from filter, filter basket lid, or filter bank door.		
3.10.1.4.1	D	SU/COM	Demonstrate the interlocks to prevent the following doors from being open simultaneously: • Posting port in-cave shield door and posting port out-cave shield door • Glovebox outer airlock door and glovebox inner airlock door Posting Port CTN: HFH-TWDVC-00003 Glovebox CTN: HFH-GB-00001	**(GTC)** HFH door interlocks are operational.		
3.10.1.4.2	D	SU/COM	Demonstrate the interlocks which prevent the opening or closing of the filter cave crane maintenance area horizontal shield door unless the vertical door is in the closed position. Horizontal Shield Door CTN: HFH-DOOR-00001	**(GTC)** HFH horizontal shield door movement interlocks are operational.	Ensure measures are provided to protect equipment from damage during the demonstration.	
3.10.1.4.3	D	SU/COM	Demonstrate the interlocks which prevent the opening or closing of the filter cave crane maintenance area vertical shield door unless the horizontal door is in the open position. Vertical Shield Door CTN: HFH-DOOR-00002	**(GTC)** HFH vertical shield door movement interlocks are operational.	Ensure measures are provided to protect equipment from damage during the demonstration.	

Requirement (para #)	Test (T) or Demo (D)	COM or SU	Plan (including SSCs)	Acceptance Criteria (TAC or GTC)*	Notes/Comments	Test Conditions
3.10.1.4.4	D	SU/COM	Demonstrate the interlocks which prevent the filter cave crane from moving to and from the crane maintenance area until the crane is raised, centered and in front of open shield doors. Crane CTN: HFH-CRN-00002 Shield Door CTNs: HFH-DOOR-00001 and HFH-DOOR-00002	**(GTC)** HFH filter cave crane movement interlocks are operational.		
3.10.1.4.6	D	SU/COM	Demonstrate the following defense in depth interlocks: • Door-to-door interlock between the in-cave and out-cave shield doors of the posting port • Gamma detection interlock to posting port out-cave shield door, to prevent the posting port out-cave shield door from opening when a high radiation source is present in the posting port CTN: HFH-TWDVC-00003	**(TAC)** HFH defense in depth interlocks are operational.		
3.10.1.6	D	SU/COM	Demonstrate the operability of local/maintenance mode features and functions during operation from the local control panels. Crane CTN: HFH-CRN-00002 Shield Door CTNs: HFH-DOOR-00001 and HFH-DOOR-00002	**(GTC)** The equipment successfully demonstrates the local/maintenance mode features and functions during operation from the local control panels.		
3.10.1.8	D	SU/COM	Demonstrate sequence control of the maintenance area equipment shield doors. Shield Door CTNs: HFH-DOOR-00001 and -00002	**(GTC)** The maintenance area equipment shield doors utilize sequence control when opening, closing, and in manual control.		
3.10.1.9	D	SU/COM	Demonstrate the operability of the independent protection interlocks during operation from the local control panels. Maintenance Crane CTN: HFH-CRN-00001 Posting Port CTN: HFH-TWDVC-00003 Glovebox CTN: HFH-GB-00001	**(GTC)** HFH independent protection interlocks are operational.		

Notes:
* Test acceptance criteria (TAC) are based on requirements from authorization basis documents. General test criteria (GTC) are requirements from other sources.
CTN = component tag number

Appendix B - Descriptions of System Functional Flow and Interactions

Function: A.1	Import Rack/Baskets Containing New Filters Into Filter Cave
Detailed description: New filters, in their respective baskets, are loaded into the rack and staged in the filter lay down area, below the floor hatch in the crane maintenance area. The floor hatch in the crane maintenance area is opened, the rack of filters is lifted into the crane maintenance area by either the filter cave crane or the maintenance crane, and the floor hatch is closed. The filter cave shield doors are opened, the filter cave crane carries the rack of filters into the filter cave, and the shield doors are closed.	
Initiation: This function initiates when it is determined by operations or maintenance that either the C5V, HOP, or PJV HEPA filters need to be replaced.	
Termination: This function terminates when the shield doors are closed following import of the filter rack into the filter cave.	
Parallel or sequential functions: Sequential with other filter replacement functions.	
Applicable Modes: Normal operating and maintenance modes	

Function: A.2	Open Intake & Exhaust Dampers on Standby Filter Bank
Detailed description: The filter cave crane is used to remotely access and open the standby HEPA filter bank intake and exhaust dampers of the C5V, HOP, or PJV, to facilitate change-out of the spent HEPA filters. During this process, the MSM is used to connect the nut runner to the filter cave crane, which in turn unscrews the damper lead screw nuts and opens the damper.	
Initiation: This function initiates after replacement filters are imported and set down in the filter cave.	
Termination: This function terminates when the respective standby filter bank intake and exhaust dampers are opened.	
Parallel or sequential functions: Sequential with other filter replacement functions.	
Applicable Modes: Normal operating and maintenance modes	

Function: A.3	Close Intake & Exhaust Dampers on Spent Filter Bank
Detailed description: The filter cave crane is used to remotely access and close the spent HEPA filter bank intake and exhaust dampers of the C5V, HOP, or PJV, to facilitate change-out of the spent HEPA filters. During this process, the filter cave crane uses the nut runner to screw the damper lead screw nuts back into the damper, closing the damper. The nut runner is then set down on the filter cave tool rack and disassembled from the filter cave crane by the MSM.	
Initiation: This function initiates after the standby filter bank intake and exhaust dampers are opened, establishing the airflow path through the standby filter bank.	
Termination: This function terminates when the respective intake and exhaust dampers for the spent filter bank are closed.	
Parallel or sequential functions: Sequential with other filter replacement functions.	
Applicable Modes: Normal operating and maintenance modes	

Function: A.4	Remove Filter Bank Door Retainer
Detailed description: The filter cave crane, with the power manipulator, is used to remotely access and remove the filter bank door retainer on the spent filter bank of the C5V, HOP, or PJV. The retainer is set down in a convenient location determined by Operations.	
Initiation: This function initiates after the spent filter bank intake and exhaust dampers are closed.	
Termination: This function terminates after the filter bank door retainer is removed and disengaged from the crane.	
Parallel or sequential functions: Sequential with other filter replacement functions.	
Applicable Modes: Normal operating and maintenance modes	

Function: A.5	Remove Filter disposal basket From Rack
Detailed description: The filter cave crane engages with the grapple and is used to remove the new filter, in its basket, from the rack to a set down position near the MSM.	
Initiation: This function initiates after the filter bank door retainer is removed and disengaged from the crane.	
Termination: This function terminates after the filter disposal basket is set down near the MSM.	
Parallel or sequential functions: Sequential with other filter replacement functions. Functions A.5 through A.19 are performed sequentially and are repeated for each of the individual filters to be changed.	
Applicable Modes: Normal operating and maintenance modes	

Function: A.6	Remove Lid From Filter Disposal Basket
Detailed description: The rotating hook, the MSM, or a combination of the two is used to disengage the lid from the basket and set it down adjacent to the filter disposal basket.	
Initiation: This function initiates after the filter disposal basket is set down.	
Termination: This function terminates when the lid is disengaged from the filter disposal basket and set down.	
Parallel or sequential functions: Sequential with other filter replacement functions. Functions A.5 through A.19 are performed sequentially and are repeated for each of the individual filters to be changed.	
Applicable Modes: Normal operating and maintenance modes	

Function: A.7	Remove Filter From Basket
Detailed description: The filter grapple is used to raise the new filter clear of the basket and set it down in a convenient location.	
Initiation: This function initiates after the lid has been removed from the basket and set down.	
Termination: This function terminates when the filter is set down and disengaged from the filter grapple.	
Parallel or sequential functions: Sequential with other filter replacement functions. Functions A.5 through A.19 are performed sequentially and are repeated for each of the individual filters to be changed.	
Applicable Modes: Normal operating and maintenance modes	

Function: A.8	Remove Filter Bank Door
Detailed description: The filter grapple is used to raise the filter bank door clear of the housing and set it down in a convenient location adjacent to the filter bank.	
Initiation: This function initiates after the new filter has been staged.	
Termination: This function terminates when the filter bank door is set down adjacent to the filter bank and the grapple is disengaged with the filter bank door.	
Parallel or sequential functions: Sequential with other filter replacement functions. Functions A.5 through A.19 are performed sequentially and are repeated for each of the individual filters to be changed.	
Applicable Modes: Normal operating and maintenance modes	

Function: A.9	Remove Spent Filter
Detailed description: The filter grapple is used to remove the spent filter from the filter housing.	
Initiation: This function initiates after the filter bank door is removed and set down.	
Termination: This function terminates when the spent filter is raised clear of the housing.	
Parallel or sequential functions: Sequential with other filter replacement functions. Functions A.5 through A.19 are performed sequentially and are repeated for each of the individual filters to be changed.	
Applicable Modes: Normal operating and maintenance modes	

Function: A.10	Place Spent Filter Into Empty Filter Disposal Basket
Detailed description: The filter grapple is used to place the spent filter into the previously staged empty filter disposal basket.	
Initiation: This function initiates after the spent filter is raised clear of the filter bank housing.	
Termination: This function terminates after the spent filter is placed in the basket and the grapple is disengaged, and when the grapple is raised clear of the basket.	
Parallel or sequential functions: Sequential with other filter replacement functions. Functions A.5 through A.19 are performed sequentially and are repeated for each of the individual filters to be changed.	
Applicable Modes: Normal operating and maintenance modes	

Function: A.11	Install Lid on Filter Disposal Basket
Detailed description: The filter grapple is used to reengage the lid on the previously staged filter disposal basket and the rotating hook and/or MSM is used to secure the lid to the basket.	
Initiation: This function initiates after the spent filter is placed into the filter disposal basket and the filter grapple is clear of the filter disposal basket.	
Termination: This function terminates after the lid is secured on the filter disposal basket, the grapple is disengaged from the lid and returned to the tool rack.	
Parallel or sequential functions: Sequential with other filter replacement functions. Functions A.5 through A.19 are performed sequentially and are repeated for each of the individual filters to be changed.	
Applicable Modes: Normal operating and maintenance modes	

Function: A.12	Import/Export Swab
Detailed description: Swabs are imported into the filter cave via the posting port. After filter disposal basket is swabbed (Function A.13), the swab is returned to the posting port for a reading by the posting port gamma monitor. The swab is then exported via the posting port or returned to the cave and placed in the in-cave disposal bucket. If level reads below allowable level to export via the posting port, contamination level is verified by reading with a hand operated gamma monitor and the swab is returned to the swab storage in the glovebox to await bag out, or is returned to the cave for disposal if levels are above allowable level.	
Initiation: This function initiates when swab is placed for transfer into or out of the cave.	
Termination: This function terminates when swab is in its final disposition.	
Parallel or sequential functions: Sequential with other filter replacement functions. Functions A.5 through A.19 are performed sequentially and are repeated for each of the individual filters to be changed. Functions A.12 through A.15 are performed sequentially (with Function A.12 both before Function A.13 for import of swab, and again for export of swab after Function A.13 is performed). Functions A.12 through A.15 are repeated for each basket containing a spent filter, and may be performed any time after the lid is installed on the filter disposal basket in function A.11 (e.g., may be performed immediately following A.11, may be performed after the new filter is installed and the filter bank door is closed by Function A.19, or may be performed after the filter housing door retainer installed by Function A.20)	
Applicable Modes: Normal operating and maintenance modes	

Function: A.13	Swab Filter Disposal Basket
Detailed description: The crane with the filter grapple and the swab handling tool on the MSM are used to perform the swabbing operation on the filter disposal basket. The filter disposal basket is transported to within reach of the MSM, and the new swab is prepared for swabbing. The swabbing operation is performed on the basket and the used swab is placed for export via the posting port.	
Initiation: This function initiates after the lid is secured on the filter disposal basket (after termination of Function A.11, but may be later) and after swab is staged in-cave via the posting port (import from Function A.12)	
Termination: This function terminates after the filter disposal basket swabbing operation is complete and swab is returned to the posting port.	
Parallel or sequential functions: Sequential with other filter replacement functions. Functions A.5 through A.19 are performed sequentially and are repeated for each of the individual filters to be changed. Functions A.12 through A.15 are performed sequentially (with Function A.12 both before Function A.13 for import of swab, and again for export of swab after Function A.13 is performed). Functions A.12 through A.15 are repeated for each basket containing a spent filter, and may be performed any time after the lid is installed on the filter disposal basket in function A.11 (e.g., may be performed immediately following A.11, may be performed after the new filter is installed and the filter bank door is closed by Function A.19, or may be performed after the filter housing door retainer installed by Function A.20). Functions A.12 (import swab), A.13 (swab filter disposal basket), A.12 (export swab and take readings), and A.14 (decontaminate filter disposal basket, as needed) are repeated as needed until filter disposal basket is determined to be acceptable for transfer to RWH (Function A.15).	
Applicable Modes: Normal operating and maintenance modes	

Function: A.14	Decontaminate Filter Disposal Basket
Detailed description: The filter disposal basket is decontaminated at the decontamination station using the MSM to manipulate wipes, CO_2, or the portable in-cave vacuum, as required, to remove loose contamination.	
Initiation: This function initiates when readings on swab (from Function A.12) are higher than the allowable level.	
Termination: This function terminates after decontamination operation is complete	
Parallel or sequential functions: Sequential with other filter replacement functions. Functions A.5 through A.19 are performed sequentially and are repeated for each of the individual filters to be changed. Functions A.12 through A.15 are performed sequentially (with Function A.12 both before Function A.13 for import of swab, and again for export of swab after Function A.13 is performed). Functions A.12 through A.15 are repeated for each basket containing a spent filter, and may be performed any time after the lid is installed on the filter disposal basket in function A.11 (e.g., may be performed immediately following A.11, may be performed after the new filter is installed and the filter bank door is closed by Function A.19, or may be performed after the filter housing door retainer installed by Function A.20). Functions A.12 (import swab), A.13 (swab filter disposal basket), A.12 (export swab and take readings), and A.14 (decontaminate filter disposal basket, as needed) are repeated as needed until filter disposal basket is determined to be acceptable for transfer to RWH (Function A.15).	
Applicable Modes: Normal operating and maintenance modes	

Function: A.15	Transfer Filter Disposal Basket to RWH
Detailed description: The filter cave crane uses the hoist hook is to remove the filter cave export hatch cover. The filter cave crane then engages with the filter grapple and is used to transport and lower the filter disposal basket containing the spent filter into the RWH drum transfer bogie. The hook is then used to replace the export hatch cover.	
Initiation: This function initiates when the filter disposal basket is determined to be decontaminated to an acceptable level.	
Termination: This function terminates after the filter cave export hatch cover is reinstalled.	
Parallel or sequential functions: Sequential with other filter replacement functions. Functions A.5 through A.19 are performed sequentially and are repeated for each of the individual filters to be changed. Functions A.12 through A.15 are performed sequentially (with Function A.12 both before Function A.13 for import of swab, and again for export of swab after Function A.13 is performed). Functions A.12 through A.15 are repeated for each basket containing a spent filter, and may be performed any time after the lid is installed on the filter disposal basket in function A.11 (e.g., may be performed immediately following A.11, may be performed after the new filter is installed and the filter bank door is closed by Function A.19, or may be performed after the filter housing door retainer installed by Function A.20).	
Applicable Modes: Normal operating and maintenance modes	

Function: A.16	Inspect Filter Seat
Detailed description: The wrist-mounted camera is used to inspect the filter seat for remaining filter sealing compound (blue gel).	
Initiation: This function initiates after the lid is secured on the filter disposal basket containing the spent filter (Function A.11), but may be performed later, after the spent filter in filter disposal basket is transferred to RWH (Function A.15)	
Termination: This function terminates after it is confirmed if there is filter sealing compound present or not.	
Parallel or sequential functions: Sequential with other filter replacement functions. A.5 through A.19 are performed sequentially and are repeated for each of the individual filters to be changed. Functions A.16 through A.19 are performed sequentially and may be performed after the lid is secured on the filter disposal basket containing the spent filter (Function A.11), but may be performed after the spent filter in filter disposal basket is transferred to RWH (Function A.15).	
Applicable Modes: Normal operating and maintenance modes	

Function: A.17	Clean Filter Seat
Detailed description: If cleaning of the seat is required, the filter cave crane/power manipulator is used to deploy a filter seat cleaning tool and/or the portable vacuum to remove remaining filter sealing compound from the sealing surface of the filter bank.	
Initiation: This function initiates when remaining filter sealing compound is detected upon inspection of filter seat.	
Termination: This function terminates after tools are returned to tool rack.	
Parallel or sequential functions: Sequential with other filter replacement functions. Functions A.5 through A.19 are performed sequentially and are repeated for each of the individual filters to be changed. Functions A.16 through A.19 are performed sequentially and may be performed after the lid is secured on the filter disposal basket containing the spent filter (Function A.11), but may be performed after the spent filter in filter disposal basket is transferred to RWH (Function A.15). Function A.17 is performed as part of this sequence if determined to be necessary in Function A.16.	
Applicable Modes: Normal operating and maintenance modes	

Function: A.18	Install New Filter
Detailed description: The filter grapple is used to install the new filter in the filter bank.	
Initiation: This function initiates after a successful inspection of the filter seat, and if applicable, after the filter cleaning tools are returned to the tool rack.	
Termination: This function terminates after the new filter is installed and grapple is cleared from the filter bank.	
Parallel or sequential functions: Sequential with other filter replacement functions. Functions A.5 through A.19 are performed sequentially and are repeated for each of the individual filters to be changed. Functions A.16 through A.19 are performed sequentially and may be performed after the lid is secured on the filter disposal basket containing the spent filter (Function A.11), but may be performed after the spent filter in filter disposal basket is transferred to RWH (Function A.15).	
Applicable Modes: Normal operating and maintenance modes	

Function: A.19	Install Filter Bank Door
Detailed description: The filter grapple is used to lift the filter bank door back into place on the filter bank opening. The filter grapple is returned to the tool rack.	
Initiation: This function initiates after the new filter is installed and the grapple is cleared from the filter bank.	
Termination: This function terminates when the filter grapple is returned to the tool rack and disengaged.	
Parallel or sequential functions: Sequential with other filter replacement functions. A.5 through A.19 are performed sequentially and are repeated for each of the individual filters to be changed. Functions A.16 through A.19 are performed sequentially and may be performed after the lid is secured on the filter disposal basket containing the spent filter (Function A.11), but may be performed after the spent filter in filter disposal basket is transferred to RWH (Function A.15). Function A.19 may be exited without returning the grapple to the tool rack, if the next function to be performed requires use of the filter grapple (e.g. moving to Function A.5 again to repeat the cycle for the next filter to be replaced).	
Applicable Modes: Normal operating and maintenance modes	

Function: A.20	Reinstall Door Retainer
Detailed description: The crane hook is used to lift, position and replace the door retainer onto the filter bank doors, and the power manipulator is used to re-engage the door retainer latches.	
Initiation: This function initiates when all the filters in the bank are replaced with all the filter bank doors installed.	
Termination: This function terminates when the door retainer is latched and both the manipulator and hook are disengaged from the equipment and lifted to transport height.	
Parallel or sequential functions: Sequential with other filter replacement functions.	
Applicable Modes: Normal operating and maintenance modes	

Function: B.1	Perform Maintenance on Handling Equipment
Detailed description: Recovery devices are provided for recovery of crane to the maintenance area. The crane and a lifting beam, or the power manipulator are used to remove and replace the MSM slave arms. The master arm and the through-wall portion of the manipulator are removed into the corridor. A maintenance crane in the CMA is used to support maintenance on the filter cave crane. Hoisted items can be manually released from the filter grapple in the event the filter grapple fails to disengage from the item. This function includes decontamination of equipment if necessary. The power manipulator is used to replace the portable vacuum filter.	
Initiation: This function initiates when Operations or Maintenance determines a need for maintenance.	
Termination: This function terminates when equipment is ready to be placed back in service.	
Parallel or sequential functions: None	
Applicable Modes: Maintenance mode	

Function: B.2	Perform Room Maintenance
Detailed description: The mechanical handling equipment is utilized to perform maintenance operations. The crane, power manipulator, and/or tools and lifting beams are used to replace lights, cameras, ventilation isolation damper internal mechanisms, tools or other in-cave equipment, such as the posting port in-cave shield door. Light bulbs can be replaced in-cave with the use of a dedicated maintenance fixture to support burnt-out bulb replacement. The filter cave handling equipment is utilized to remotely replace the HEPA filter bank door seals. Major repairs are performed in the CMA. Shield doors have recovery provisions to manually close the doors for maintenance on the out-cave motors and drives. Maintenance on the posting port and glovebox (except the in-cave shield door) can be recovered or repaired in the glovebox or in the corridor. This function includes decontamination of equipment if necessary.	
Initiation: This function initiates when Operations or Maintenance determines a need for maintenance.	
Termination: This function terminates when equipment is ready to be placed back in service.	
Parallel or sequential functions: None	
Applicable Modes: Maintenance mode	

Function: C.1	Receive Electrical Power
Detailed description: Electrical power to the HFH equipment and instruments is supplied by the LVE.	
Initiation: This function initiates when the HLW Facility is in startup operations.	
Termination: This function terminates when HLW glass production operations are complete.	
Parallel or sequential functions: All	
Applicable Modes: All modes	

Function: E.1	Facilitate Viewing of Remote Operations Via CCTV
Detailed description: Cameras are utilized to view remote HFH operations.	
Initiation: This function initiates in the preparation for remote operations.	
Termination: This function terminates upon completion of remote operations.	
Parallel or sequential functions: All.	
Applicable Modes: All modes.	

Function: F.1	Provide Nonsafety Monitoring and Control Via MHJ
Detailed description: The mechanical handling control system (MHJ) provides nonsafety monitoring and control functions for the HFH system. MHJ provides control and monitoring to the import of filter and filter disposal baskets from the CMA to the filter cave, the movement of an empty filter disposal basket or filter disposal basket containing a filter in the filter cave, the replacement of a spent filter with a new filter, and the transfer of filter disposal baskets to the RWH System transfer bogie. MHJ provides monitoring and control of the shield doors in the filter cave via through wall drives. In addition, MHJ provides monitoring and control of the filter cave crane reeling system recovery device. Finally, MHJ provides monitoring and automatic control to supporting nonsafety equipment damage prevention.	
Initiation: This function initiates at beginning of operation of mechanical handling equipment.	
Termination: This function terminates when operation of mechanical handling equipment ends.	
Parallel or sequential functions: All.	
Applicable Modes: All modes.	

Function: G.1	Wash HFH Equipment in CMA
Detailed description: The DIW system is supplied in the HFH CMA for decontamination of equipment. The wastewater is collected in the room sumps and transferred to the RLD system.	
Initiation: This function initiates when decontamination of equipment is required.	
Termination: This function terminates upon completion of decontamination.	
Parallel or sequential functions: None.	
Applicable Modes: Maintenance, decontamination and decommissioning.	

Function: H.1	Provide Fire Protection Inside HFH Equipment Enclosures
Detailed description: Fire protection water is supplied by FPW to the HFH posting port and glovebox enclosures and to the filter cave crane cable reel by an automatic sprinkler system.	
Initiation: This function initiates when there is a fire inside the posting port enclosure, the glovebox enclosure, or the crane cable reel enclosure.	
Termination: This function terminates when the threat of fire inside the posting port enclosure, the glovebox enclosure, or the crane cable reel is eliminated.	
Parallel or sequential functions: All.	
Applicable Modes: All modes.	

Function: H.2	Provide fire protection to filter cave crane
Detailed description: The filter cave crane is provided automatic fire protection system.	
Initiation: This function initiates when there is a fire onboard the crane.	
Termination: This function terminates when the threat of fire onboard the crane is eliminated.	
Parallel or sequential functions: All.	
Applicable Modes: All modes.	

Appendix C- Active Safety Instruments and Functions

Information in the following table reflects the current design of active safety instruments, including functions, and safety designations per the P&IDs and associated equipment and instrument lists. In some cases, the current safety classification of the SSCs in design is known to exceed the design requirements. The information will be updated as needed to reflect changes to the design. The information below is provided in support of Plant Engineering and Operations and does not represent design requirements.

No active safety instrumented functions are identified.

Appendix D - Reserved - System Procedures

Appendix E - Reserved – System History

Issued by
RPP-WTP PDC

HLW Melter Feed Process (HFP) and Concentrate Receipt Process (HCP) System Design Description

Document title:

Document number: 24590-HLW-3ZD-HFP-00001

Revision number: B

Type: ☑ System Design Description
☐ Facility Design Description

Originator(s): Scott Peters

Checked by: Jason Appleby

Checker's signature: *Signature* 8/12/15 *Date*

Concurrence: Mark Johnson

Concurrence signature: for M. Johnson
SEAN SMITH *Manager of Production Engineering Signature* 8/19/15 *Date*

Concurrence: Ian Milgate
Travis Vincent for Ian Milgate

Concurrence signature: *Project Technical Director and Design Authority Signature* 8/19/15 *Date*

Approved by: Natalie Harkey

Approver's position: Systems Engineering Manager

Approver's signature: Natalie Harkey *Signature* 8/20/2015 *Date*

Validation

Appl.	Requirement Area	Requirement Developer	Signature	Date
☐	Architectural Design			
☐	Civil/Structural Design			
☑	Controls & Instrumentation Design	Wayne Underhill		8/14/15
☐	Electrical Design & AHJ			
☐	Fire Protection Engineering			
☐	HVAC Design			
☑	Mechanical Handling Design	Julian Leam	See attached email	
☑	Mechanical Systems Design	Julian Leam	See attached email	
☑	Plant Design	John Schuette	See attached email	
☑	Process Engineering	Eric Slaathaug for Bob Voke	See attached email	
☐	Interface (External)			
☐	Interface (Internal)			
☐	System Functions and Requirements			
☑	Equipment Environmental Qualification	Govind Rajagopal	G. Rajagopal	8-11-15
☑	Materials Engineering / Technology	Debbie Adler	See attached email	
☐	Plant Software Design			
☑	Environmental Permitting (ESH)	Barry Curn	See attached email	
☑	Nuclear Safety Engineering	Scott Manley	See attached email	
☐	Criticality Safety			
☑	Radiological Engineering	Kyle Peltier	See attached email	
☐	Industrial Safety/Hygiene (ESH)			
☐	Mission (WTP Contract functional/ performance rqmts)			
☑	Operations Requirements Document (Plant Ops)	Dan Rovira	See attached email	
☑	Quality Assurance	Virginia Cleary-Isaroff	See attached email	
☐	Safeguards & Security			
☐	Startup			
☐	Transportation & Logistics			

* Validation not required for alpha/preliminary design description documents.

History Sheet

Rev	Reason for revision	Revised by
A	Initial issue. Replaces 24590-HLW-3YD-HFP-00001, *System Description for HLW Concentrate Receipt Process and HLW Melter Feed Process Systems (HCP & HFP)*	B. Pratt/M. Kulp
B	Insertion of Section 4, System Description, into the SDD. Revision of the functional analysis table references D.2 and H.1 to incorporate changes with the system interfaces between the HFP system and the RLD system and identification of holds associated with pending changes in the PDSA revision. Enhanced section 3 requirement wording and added requirements based on ROINs not captured in the original revision.	Scott Peters

Contents

Validation ii

History Sheet iii

1 Introduction 1

1.1 System Identification 1

1.2 Limitations and Scope 1

1.3 Ownership and Maintenance 2

1.4 Definitions/Glossary 2

1.5 Acronyms and System Designators 2

2 General Overview 5

2.1 System Functions/Safety Functions 8

2.2 System Classification 14

2.3 Basic Operational Overview 15

3 Design Requirements 15

3.1 Requirements 15

3.2 Bases 16

3.3 References 16

3.4 General Requirements 16
3.4.1 Mission and Functional / Performance Requirements (Including States/Modes) 16
3.4.2 Nuclear Safety, ALARA, Environmental, and Other Regulatory Requirements 24
3.4.3 System Interface Requirements 28
3.4.4 Other Technical, Specialty, Operations and Maintenance Requirements 29

3.5 Vessel Requirements 34
3.5.1 Mission and Functional / Performance Requirements (Including States/Modes) 34
3.5.2 Nuclear Safety, ALARA, Environmental, and Other Regulatory Requirements 36
3.5.3 System Interface Requirements 38
3.5.4 Other Technical, Specialty, Operations and Maintenance Requirements 43

3.6 Piping Requirements 44
3.6.1 Mission and Functional / Performance Requirements (Including States/Modes) 44
3.6.2 Nuclear Safety, ALARA, Environmental, and Other Regulatory Requirements 47
3.6.3 System Interface Requirements 49
3.6.4 Other Technical, Specialty, Operations and Maintenance Requirements 50

3.7 Mechanical Agitator Requirements 52
3.7.1 Mission and Functional / Performance Requirements (Including States/Modes) 52
3.7.2 Nuclear Safety, ALARA, Environmental, and Other Regulatory Requirements 53
3.7.3 System Interface Requirements 54
3.7.4 Other Technical, Specialty, Operations and Maintenance Requirements 54

3.8 Air Sparger Requirements 54
3.8.1 Mission and Functional / Performance Requirements (Including States/Modes) 54
3.8.2 Nuclear Safety, ALARA, Environmental, and Other Regulatory Requirements 54
3.8.3 System Interface Requirements 55
3.8.4 Other Technical, Specialty, Operations and Maintenance Requirements 56

3.9 Pump Requirements 56

3.9.1 Mission and Functional / Performance Requirements (Including States/Modes) 56
3.9.2 Nuclear Safety, ALARA, Environmental, and Other Regulatory Requirements 58
3.9.3 System Interface Requirements 58
3.9.4 Other Technical, Specialty, Operations and Maintenance Requirements 59

3.10 Monitoring and Controls Requirements 59
3.10.1 Mission and Functional / Performance Requirements (Including States/Modes) 59
3.10.2 Nuclear Safety, ALARA, Environmental, and Other Regulatory Requirements 66
3.10.3 System Interface Requirements 71
3.10.4 Other Technical, Specialty, Operations and Maintenance Requirements 72

3.11 Other Structures, Systems, and Components Requirements 74
3.11.1 Mission and Functional / Performance Requirements (Including States/Modes) 74
3.11.2 Nuclear Safety, ALARA, Environmental, and Other Regulatory Requirements 75
3.11.3 System Interface Requirements 76
3.11.4 Other Technical, Specialty, Operations and Maintenance Requirements 77

3.12 Relevant Codes and Standards 77
3.12.1 Codes of Record 77
3.12.2 WTP Design Criteria, Design Guides, and General Specifications 78

4 System Description 82

4.1 Configuration Information 82
4.1.1 Description of System, Subsystems, and Major Components 82
4.1.2 Boundaries and Interfaces 90
4.1.3 Physical Layout and Location 92
4.1.4 Principles of Operation 93
4.1.5 System Reliability Features 93
4.1.6 System Control Features 93

4.2 Operations 131

4.3 Supplemental Information 131

5 Sources, Bases, and Other References 131

5.1 Source / Basis References 131

5.2 Other References 132

5.3 Design References 134

Appendices

Appendix A Test Objectives, Conditions, and Acceptance Criteria A-1

Appendix B Descriptions of System Functional Flow and Interactions B-1

Appendix C Active Safety Instruments and Functions C-1

Appendix D -Reserved-System Procedures D-1

Appendix E -Reserved-System History E-1

Tables

Table 2–1 Functional Analysis and Crosswalk to Requirements....10
Table 3–1 HCP and HFP Equipment and Components Design Life....19
Table 3–2 HCP and HFP Seismic Design Categories....22
Table 3–3 HCP and HFP Safety Designations....25
Table 3–4 HCP and HFP System Interfaces....28
Table 3–5 Remotely Maintainable or Replaceable Equipment and Components....30
Table 3–6 HCP and HFP Applicable Codes and Standards....77
Table 3–7 WTP Design Criteria, Design Guides, and General Specifications Applicable to HCP and HFP....78
Table 4–1 System Interfaces....90
Table 4–2 Manual Actions for the HLW HFP System....94
Table 4–3 Automatic Actions for the HLW HFP System....95

Figures

Figure 2–1 HCP and HFP Context Diagram....6
Figure 2–2 HCP and HFP Simplified Process Flow Diagram....7
Figure 2–3 HCP and HFP Functional Block Diagram....9
Figure 4–1 Simplified Flow Diagram for HCP and HFP System....83
Figure 4–2 Overhead View of MFPV and MFV....85

1 Introduction

1.1 System Identification

This system design description (SDD) defines the technical, functional and performance requirements of the high-level waste (HLW) concentrate receipt process system (HCP) and HLW melter feed process system (HFP). This document details the waste treatment requirements, environmental compliance requirements, and authorization basis requirements of the HCP and HFP systems as they are currently known and understood. This SDD describes the process and functional design requirements of the HCP and HFP systems, including the following:

- Services and utility requirements, operating materials and supplies, and other external interfaces
- Operations limits and design bases
- Other criteria and requirements pertinent to the design of the HCP and HFP systems

The HCP and HFP systems receive waste from the Pretreatment (PT) Facility, mix the waste with glass formers, ensure the waste meets established characteristics via sampling, and transfers the waste with glass formers to the melter system. The boundaries, system interfaces, and functional description of the HCP and HFP systems are provided in Sections 2 and 3.4.3.

1.2 Limitations and Scope

The scope of this document is to provide an authoritative source for the collected set of requirements applicable to the HCP and HFP systems, inclusive of interface requirements with other systems. The SDD scope is limited to HCP and HFP system features that support production and/or protect equipment, personnel, and the environment. The SDD is prepared in accordance with 24590-WTP-3DP-G04B-00093, *System and Facility Design Descriptions*. The intended use of these collected requirements is to establish the following:

- Inform the HCP and HFP system design effort
- Provide a validated basis upon which to confirm implementation of design requirements
- Provide the expected means of verification for requirements, including post-construction verification (i.e., startup and commissioning test objectives and acceptance criteria)

All requirements in this document are intended to be verified and implemented in design and/or physical configuration using a graded approach commensurate with importance and risk.

Where numeric values are provided within requirements in Section 3, these values are provided without additional margin. For example if a value is established in 24590-WTP-DB-ENG-01-001, Basis of Design (BOD), no attempt is made to remove any margin that may or may not have gone into the establishment of that value, neither has any margin been added. Where values are stated as minimums or maximums, there is no expectation that additional margin be applied in the verifications that the design requirements have been met. Testing required to be performed in accordance with external codes and standards must follow the rules established in those documents.

This document is intended to be used in support of design development, design verification, turnover, startup testing, and commissioning activities. This document will be maintained current relative to changes in source requirements documents. Updates shall be made concurrent with these changes to source requirements, or

implementation shall be tracked for completion in accordance with 24590-WTP-GPG-ENG-0170, *Impact Evaluation*.

Engineers are expected to be able to use the requirements in Section 3 of this document as input for design development without recourse to the upper-tier source documents or searches of the Technical Requirements Search Application (TRSA). Design engineers are still required to ensure the requirements contained with the discipline/functional standards incorporated by reference in Section 3 are followed. These documents contain additional criteria based on applications of external codes/standards, corporate best practices, and Engineering management expectations for a consistent approach to design.

Certain requirement statements in this document are preceded by a "**[HOLD]**" notation. This notation is used when there are unresolved technical issues, known inconsistencies among source requirements, or other management suspensions of work requiring resolution. Requirements with the "**[HOLD]**" notation may be used to proceed with preliminary or committed design (with inclusion of appropriate holds) but shall not be used in support of fabrication or construction until the "**[HOLD]**" is removed.

The contents of Sections 4 are being developed in a phased approach in support of future operations and maintenance. At this revision, only the contents of Sections 4.1.1 through 4.1.4 and Section 4.1.6 have been updated and verified. Sections 4.1.5, 4.2, 4.3 and 4.4 are currently reserved and will be updated in a later phase after the work to support completion of these sections has been completed.

1.3 Ownership and Maintenance

The Design Authority (DA) organization is responsible for the preparation and maintenance of this document through turnover of the included systems to Operations. Thereafter, maintenance of this document is the responsibility of the Plant Engineering organization; however, the Engineering DA organization retains responsibility for the establishment and definition of design requirements.

1.4 Definitions/Glossary

Confinement – For consistency, regardless of usage elsewhere, confinement is used in this document to denote the controls used to prevent or minimize the release or migration of airborne contaminants, including aerosols, hazardous vapors, or gases.

Containment – For consistency, regardless of usage elsewhere, containment is used in this document to denote the controls used to prevent or minimize the release or migration of liquid or liquid-entrained contaminants.

Primary confinement / containment – The structures, systems, or components (SSCs) and their associated boundaries that confine or contain airborne and liquid contaminants under normal conditions.

Secondary confinement / containment – The structures or other design features that capture and prevent further spread or migration of airborne or liquid contaminants after they have escaped primary confinement or containment.

1.5 Acronyms and System Designators

Acronyms

A, I, D, T	analysis, inspection, demonstration, test
ADS	air displacement slurry
AHJ	authority having jurisdiction

ALARA	as low as reasonably achievable
ASME	American Society of Mechanical Engineers
ASTM	American Society for Testing and Materials
BOD	*Basis of Design*
BPVC	Boiler and Pressure Vessel Code
C&I	Controls and Instrumentation
CCN	correspondence control number
CDI	configuration data index
COM	commissioning
CON	construction
CTN	component tag number
D&D	decontamination and decommissioning
DA	Design Authority
DBE	design basis event
DOE	US Department of Energy
DVR	design verification report
ENG	Engineering
EQP	equipment qualification package
FCR	facility control room
GTC	general test criteria
HEPA	high-efficiency particulate air
HGR	hydrogen generation rate
HLW	High-Level Waste (Facility)
IHLW	immobilized high-level waste
LFL	lower flammability limit
MCR	main control room
MFPV	melter feed preparation vessels
MFV	melter feed vessels
MR	material requisition
MTG	metric tons of glass
NFPA	National Fire Protection Association
NSE	Nuclear Safety Engineering
ORD	*Operations Requirements Document*
P&ID	piping and instrumentation diagram
PAM	post-accident monitoring
PDSA	preliminary documented safety analysis
PT	Pretreatment (Facility)
R&T	Research and Technology
ROIN	requirement object identification number
SC	safety class
SDD	system design description
SDS	*Safety Design Strategy for High-Level Waste Facility*
SFC	single failure criteria
SRD	*Safety Requirements Document Volume II*

SS	safety significant
SSC	structures, systems, or components
SSRS	safety system requirement specifications
SQR	supplier quality representative
SU	startup
SUB	subcontractor
SUP	supplier
TAC	test acceptance criteria
UPE	Uninterruptible Power Electrical System
UPS	Uninterruptible Power Supply System
WAI	waste acceptance impacting
WG	water gauge
WTP	Hanford Tank Waste Treatment and Immobilization Plant
ZOI	zone of influence

System Designators

ASX	autosampling system
C5V	C5 ventilation system
DIW	demineralized water system
GFR	glass former reagent system
HCP	HLW concentrate receipt process system
HFP	HLW melter feed process system
HLP	HLW lag storage and feed blending process system
HMP	HLW melter process system
HOP	HLW melter offgas processing system
HPS	high pressure steam system
HSH	HLW melter cave support handling system
ISA	instrument service air system
LVE	low voltage electrical (480/208/120 V) system
NAR	nitric acid reagent system
PCJ	process control system
PCW	plant cooling water system
PPJ	programmable protection system
PVV	process vessel vent exhaust system
PWD	plant wash and disposal system
RLD	radioactive liquid waste disposal system

2 General Overview

The HCP provides HLW concentrate from the PT Facility HLW lag storage and feed blending process system (HLP) to the HFP. The boundary of the HCP begins outside the HLW Facility and ends before the HLW melter cave wallbox, where it transitions into the HFP. The HCP does not include any equipment, only transfer lines. The HFP supplies the HLW concentrate to the melter feed preparation vessels (MFPVs). The HLW concentrate is sampled in the MFPVs and the results are used to determine the quantity of each glass former that is added to the waste. Glass formers from the glass former reagent system (GFR) are added to HLW concentrate and mixed in the MFPVs to form the melter feed. The HFP boundary with the GFR begins at the isolation valve downstream of the HLW glass former mixer on the discharge line to MFPV. The waste with glass formers is sampled and adjusted as needed to meet the waste form specifications. The melter feed is transferred from the MFPVs to the melter feed vessels (MFVs) for staging. The MFVs may also be sampled, but this is not part of the normal process control. The MFVs are capable of supplying the melter feed to the HLW melter process system (HMP) with continuous feed for glass production. The HFP boundary ends after the MFV on the HLW HMP melter feed jumper before the HLW melter. The HFP contains the MFPVs and MFVs (HFP vessels), including the associated piping, inline components, and equipment such as pumps and agitators. All other boundaries between the HFP and other systems are defined based on their type of control.

Figure 2–1 provides a contextual depiction of the HCP and HFP systems in terms of their primary interrelationships with other systems and utilities. This diagram does not differentiate among some utilities that have both normal and safety service provisions. This diagram is used in support of functional and performance definition at the system level. Figure 2–2 provides a simplified process flow diagram of the overall HCP and HFP systems. Blue arrows are used in these figures to highlight the primary flow path of the HCP and HFP systems, orange arrows show the abnormal transfer lines between vessels in separate melter trains; and black arrows illustrate the supporting systems, utilities, and secondary flow paths. Refer to Section 1.5 for the list of relevant system designators.

Figure 2–1 HCP and HFP Context Diagram

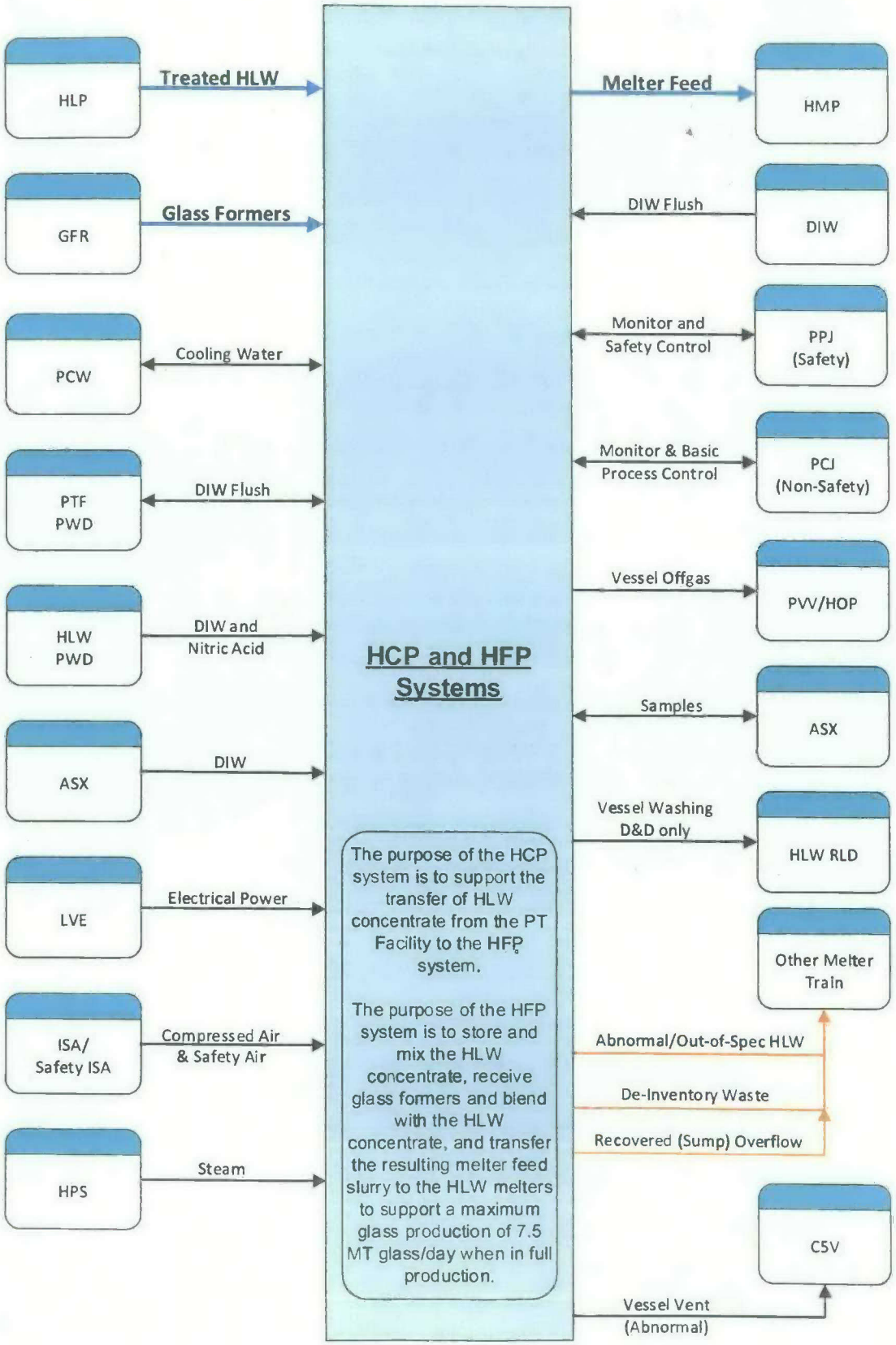

Figure 2–2 HCP and HFP Simplified Process Flow Diagram

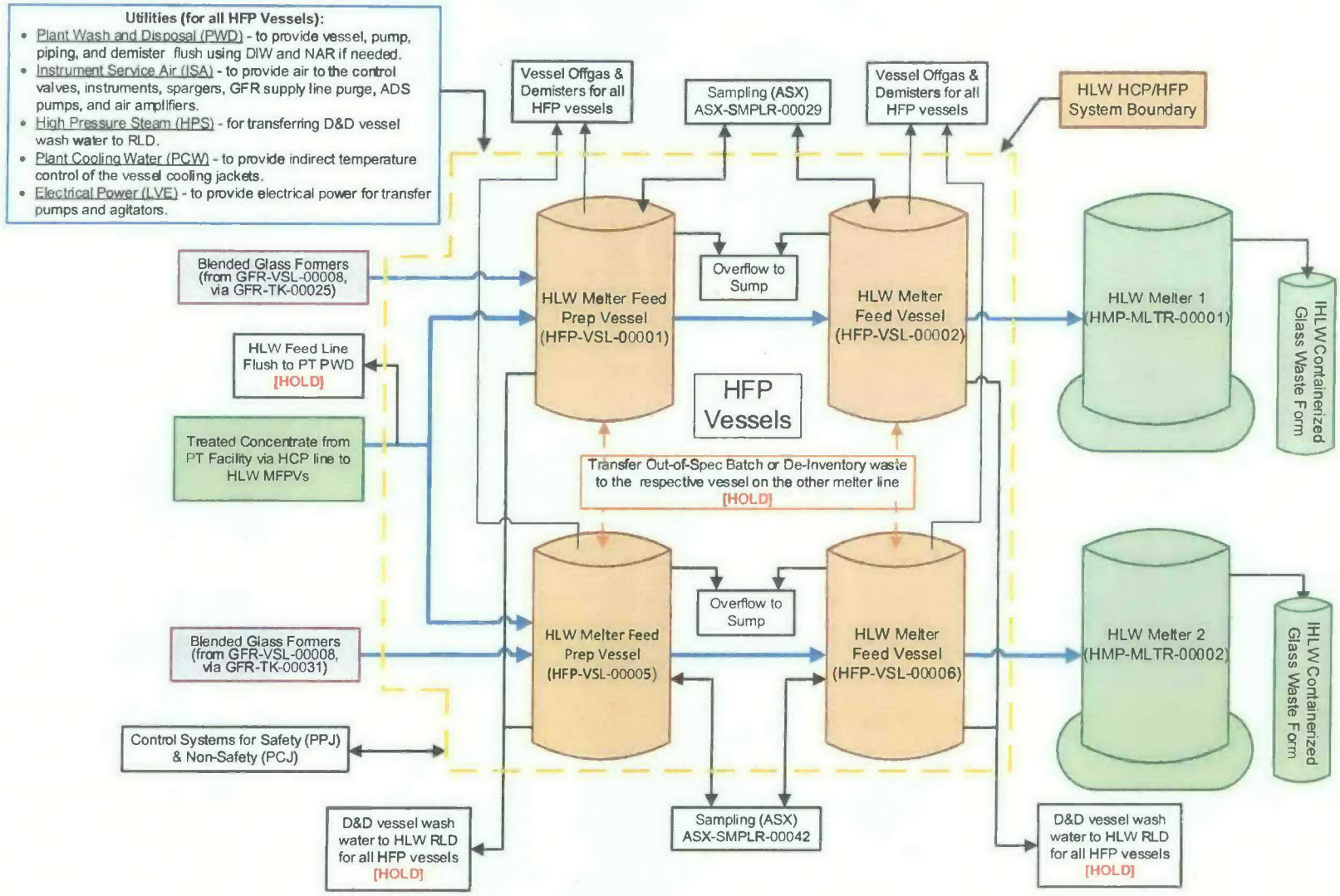

2.1 System Functions/Safety Functions

This section defines the HCP and HFP functions and attributes that need to be addressed by the system design. Figure 2–3 provides the functional block diagram for the HCP and HFP systems, indicating the internal and external systems and utilities that provide the primary support or interface for that function. Section 3 provides the design and performance design requirements to meet both functional and other requirements.

System interfaces are provided for reference only. Refer to Section 1.5 for the list of relevant system designators.

Figure 2–3 HCP and HFP Functional Block Diagram

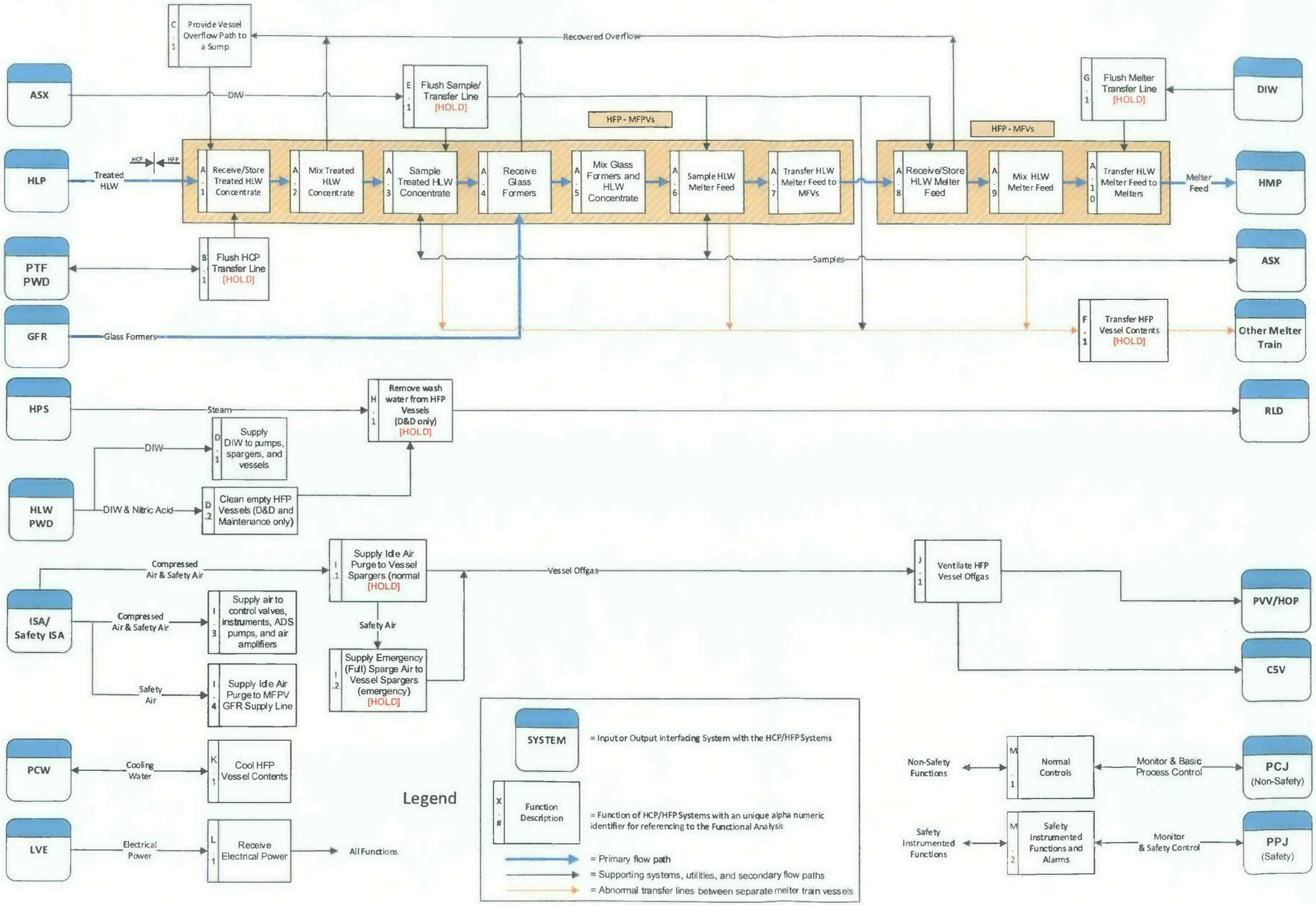

The functions included in Figure 2-3 are the primary and secondary level functions of the HCP and HFP systems. These functions are further described in Table 2–1. Where appropriate to support definition of functional and design requirements, functions have been further decomposed and additional levels of supporting functions are also described. The requirement section number provides the location of the applicable functional analysis incorporated into system requirements.

Appendix B provides a further decomposition of system functions, including initiating, terminating, and integrating events and functions.

Table 2–1 Functional Analysis and Crosswalk to Requirements

Reference	Functional Analysis Description	Requirement Section No.
A.	**Receive Waste, Glass Formers, and Prepare HLW Melter Feed for Vitrification**	N/A
A.1	Receive/store treated HLW concentrate - The MFPV receives HLW concentrate from the PT Facility HLW lag storage and feed blending process system (HLP) via the HCP piping. The MFPV interfaces with the autosampling system (ASX) to sample and characterize the HLW concentrate.	3.5.1.1.2 3.5.3.1 3.6.2.2
A.1.1	[HOLD] Receive HLW sump flows- Sumps which could contain melter feed are routed to the MFPVs (via steam ejectors through the melter train cross connection).	3.4.4.6
A.2	Mix treated HLW concentrate - The HLW concentrate is mixed in the MFPV before transferring to the ASX, which collects a representative sample for analysis to determine the glass former recipe.	3.5.1.1.2 3.5.2.2 3.7.1.1 3.7.1.2.1 3.7.1.2.2
A.3	Sample treated HLW concentrate - The HLW concentrate is transferred from the MFPV to the ASX and returns back to the MFPV using a circulation loop. The ASX uses an auto sampler to extract a representative sample for analysis in the Analytical Laboratory. Sample data is collected for each MFPV batch to ensure an adequate quantity of glass formers is added for final waste characterization to meet glass property and waste loading requirements.	3.4.1.1.3 3.5.3.9
A.3.1	**[HOLD]** Flush sample line - Demineralized water is used to flush the sample recirculation line into the MFPV via the ASX system.	3.5.3.10 3.6.3.1
A.4	Receive glass formers - MFPV receives glass formers from the GFR system. The proper proportions of various glass formers are prepared, mixed, moistened, added to the HLW concentrate, and mixed to prepare HLW feed material. (See A.6).	3.5.3.2
A.5	Mix glass formers with HLW concentrate - A mechanical agitator mixes glass formers and HLW concentrate in the MFPV to ensure data quality objectives are met in support of waste form qualification.	3.7.1.1 3.7.1.2.1 3.7.1.2.2
A.6	Sample HLW melter feed - Representative samples of the HLW melter feed are taken from the MFPV by the ASX and analyzed to confirm the melter feed meets glass property and waste loading requirements for each particular batch. If the melter feed is not acceptable, additional glass formers can be added and mixed to shim the batch. The shimmed batch is then resampled to ensure the final glass product will meet the acceptance criteria.	3.4.1.1.3 3.5.3.9

Table 2–1 Functional Analysis and Crosswalk to Requirements

Reference	Functional Analysis Description	Requirement Section No.
A.6.1	[**HOLD**] Flush sample line - Demineralized water is used to flush the sample recirculation line into the MFPV.	3.5.3.10 3.6.3.1
A.7	Transfer HLW melter feed to MFVs - The HLW melter feed is transferred from the MFPV to the MFV.	3.4.1.1.1 3.5.3.3
A.8	Receive/Store HLW melter feed – The MFV receives and stores HLW melter feed from the MFPV until it is transferred to the melter.	3.5.3.3
A.9	Mix HLW melter Feed - The HLW melter feed is continuously mixed while being staged in the MFV before transferring to the melter for vitrification.	3.7.1.1 3.7.1.2.1 3.7.1.2.2
A.10	Transfer HLW melter feed to melters - Except for periodic line flushes, HLW feed is continuously transferred from the MFV to the melter for vitrification as a continuous low volumetric rate stream.	3.4.1.1.2 3.5.3.4 3.9.1.2 3.9.3.2.1
B.	**Prevent plugging of the PT Facility to HLW Facility transfer line**	N/A
B.1	[**HOLD**] Flush HCP transfer line - The HCP transfer line will be flushed to prevent plugging and the accumulation of detonable quantities of hydrogen. The flush water will be directed back to the PT Facility plant wash and disposal system (PWD).	3.4.4.3 3.6.3.1 3.6.4.1
C.	**Prevent Liquid Uptake into the Process Vessel Vent Exhaust System (PVV)**	N/A
C.1	Provide vessel overflow path to a sump - MFPVs and MFVs (HFP vessels) are designed with an overflow path to preclude liquid uptake into the process vessel vent exhaust system (PVV) and maintain a minimum headspace volume. Overflowed liquid will be directed from the HFP vessel to the respective melter cave sump.	3.5.2.1.1 3.5.2.1.2 3.5.2.1.3
D.	**Supply HFP Vessels with Demineralized Water and Nitric Acid from HLW PWD and NAR**	N/A
D.1	Supply Demineralized Water - Demineralized water is provided to the pumps, spargers, and HFP vessels.	3.5.3.5 3.6.4.1 3.8.4.1
D.1.1	Demineralized water is used for priming the sample/transfer pumps to clear the pump and to initiate the pump, without waste, until the pump reaches operating capacity.	3.9.3.1.1
D.1.2	Demineralized water is used for flushing the spargers to prevent them from plugging.	3.8.4.1
D.1.3	Demineralized water is used for diluting the waste in the HFP vessels via the spargers or internal spray mechanisms.	3.5.3.11
D.2	Clean empty HFP vessels - HFP vessels are washed using demineralized water and nitric acid from the nitric acid reagent system (NAR), if needed, via the PWD. The washwater is transferred from the HFP vessels to the radioactive liquid waste disposal system (RLD) using the steam ejectors to support vessel decontamination and decommissioning (D&D) (see H.1). Vessel Washings during normal operations will be processed forward to the melters.	3.5.3.5 3.5.4.1
E.	**Flush Sample/Transfer Lines with Demineralized Water from ASX**	N/A

Table 2–1 Functional Analysis and Crosswalk to Requirements

Reference	Functional Analysis Description	Requirement Section No.
E.1	[**HOLD**] Flush sample/transfer line - The HFP vessel sample loops and transfer line from the MFPV to MFV are flushed using demineralized water to prevent lines from plugging. The lines are flushed into the HFP vessels.	3.6.3.1 3.6.4.1
F.	**HFP Vessel Cross-Tie Between Melter Trains**	N/A
F.1	[**HOLD**] Transfer HFP vessel contents - The HFP vessel contents are removed and transferred to the other melter train either upon receipt of an out-of-specification batch sample analysis or to de-inventory the waste.	3.4.4.2
G.	**Prevent plugging of the MFV to Melter Transfer Line**	N/A
G.1	[**HOLD**] Flush melter transfer line - The transfer piping from the MFV to the melter will be flushed to prevent plugging.	3.6.3.1 3.6.4.1
H.	**Remove Vessel Wash Contents**	N/A
H.1	[**HOLD**] Remove washwater from HFP vessels – Vessel washwater will be processed forward to the melters during normal operations. During vessel D&D activities, the high-pressure steam system (HPS) provides steam to the steam ejectors to remove the MFPVs and MFVs (HFP vessels) and transfers the liquid to the RLD.	3.4.4.4 3.5.3.8 3.5.4.1 3.5.3.11
I.	**Supply HFP Vessels with Air for Purge/Sparge, Control Valves, Instruments, and Air Displacement Slurry Pumps from ISA and Safety ISA**	N/A
I.1	[**HOLD**] Supply idle air purge to vessel spargers - The sparger lines provide compressed air from the instrument service air system (ISA) to provide a trickle flow (idle air purging) during normal mixing operations. The trickle flow is provided to lower the risk of sparging line plugging and to prevent the buildup of hydrogen gas in the vessel headspace.	3.8.2.1 3.8.3.1
I.2	[**HOLD**] Supply emergency (full) sparge air to vessel spargers - The sparger lines provide compressed air from ISA to provide emergency air sparging to mix the waste after a seismic design basis event (DBE). The emergency sparging provides agitation of the waste sufficient to preclude retention of hydrogen in the waste when normal agitation is unavailable either post-seismic DBE or maintenance.	3.8.2.1 3.8.3.2
I.3	Supply air to control valves, instruments, air displacement slurry (ADS) pumps and air amplifiers. Air is used to supply the motive force to open/operate control valves, instruments, ADS pumps, and air amplifiers.	3.9.3.2.1 3.11.3.1.1 3.11.3.2.1
I.4	Supply idle air to purge to MFPV GFR supply line. Air is used to prevent backflow of contamination from the MFPVs to the GFR during normal operation.	3.5.3.12
J.	**Ventilate Vessel**	N/A
J.1	Ventilate HFP vessel offgas - Negative headspace pressure is maintained in the HFP vessels by the PVV and HLW melter offgas treatment process system (HOP). The HFP vessels are vented by air amplifiers or an overflow feature into the melter cave where the headspace gas is removed by the C5 ventilation system when HOP/PVV is unavailable.	3.5.3.7.1
J.1.1	Demisters are used to prevent excessive moisture and aerosols from being carried out of the HFP vessels into the HOP high-efficiency particulate air (HEPA) filters.	3.11.1.1
K.	**Cool Vessel**	N/A

Table 2–1 Functional Analysis and Crosswalk to Requirements

Reference	Functional Analysis Description	Requirement Section No.
K.1	Cool HFP vessel contents - HFP vessels are cooled using water jackets and chilled water from the plant cooling water system (PCW) to remove heat generated by mixing and radioactive decay.	3.5.3.6
L.	**Electrical Power**	N/A
L.1	Receive Electrical Power - The low voltage electrical (480/208/120 V) system (LVE) provides electrical power to the HFP equipment and instruments.	N/A
M.	**Support Monitoring, Control, and Communication Functions**	N/A
M.1	Process Control System (PCJ) - Normal Controls	3.10.3.2
M.1.1	The HCP / HFP process shall be monitored and controlled by the PCJ system and shall include the following main functions: a) Control incoming PT Facility waste transfers and melter feed (including line flushes) b) Monitor vessel level, temperature and pressures c) Control operation of valves, pumps, ejectors, agitators, sampling and cooling systems d) Monitor device status (valve, pumps etc.) e) Monitor sample line flow f) Monitor sparge flows g) Monitor cooling water flow h) Automatic flushing control	a) 3.5.1.1.2 3.10.4.1 b) 3.5.1.1.2 3.5.1.1.3 3.5.1.1.4 3.10.1.1.1 3.10.1.1.2 3.10.1.1.3 3.10.1.1.34 3.10.4.1 c) 3.5.1.1.3 3.10.1.4.3 3.10.4.1 d) 3.10.4.1 e) 3.10.1.4.1 3.10.4.1 f) 3.8.3.1 3.10.1.3.1 3.10.4.1 g) 3.5.3.6 3.10.4.1 h) 3.10.4.4
M.1.2	The PCJ system shall allow the remote monitoring and control of the HCP / HFP systems from the HLW Facility Control Room (FCR) and Main Control Room (MCR) in the PT Facility.	3.5.1.1.2 3.10.4.1
M.2	Programmable protection system PPJ - Safety Instrumented Functions and Alarms	3.10.2.3 3.10.2.4 3.10.3.1
M.2.1	Operate valves for transferring and sampling - The PPJ provides automatic safety termination of transfer from the PT Facility to the MFPV by repositioning the valve to route the waste transfer back to the PT Facility. Position indication needs to be provided by the monitoring capability on both PPJ and PCJ systems.	3.10.1.4.2 3.10.1.4.4 3.10.2.2.1 3.10.4.2 3.10.4.4
M.2.2	[**HOLD**] Operate sample/transfer pumps - The PPJ stops the sample/transfer pumps for safety interlocks.	3.10.1.4.2 3.10.1.4.3 3.10.4.2

Table 2–1 Functional Analysis and Crosswalk to Requirements

Reference	Functional Analysis Description	Requirement Section No.
M.2.3	[**HOLD**] Operate air displacement slurry (ADS) pumps - The PPJ stops the ADS pumps for safety interlocks.	3.10.1.4.4 3.10.4.2
M.2.4	[**HOLD**] Switch from idle air purge mode to emergency sparge mode - The PPJ controls the airflow through the sparge tubes and switches from idle air purge mode to emergency sparge mode after the mechanical agitator speed or power drops below setpoint values.	3.10.1.2.3 3.10.1.3.2 3.10.4.2
M.2.5	[**HOLD**] Measure air sparger flow rate - For emergency sparging, the PPJ provides monitoring of the volume rate of air flowing through the sparger air supply lines.	3.8.3.2 3.10.1.2.3 3.10.1.3.2 3.10.1.3.3 3.10.2.1.3 3.10.4.2
M.2.6	Measure mechanical agitator speed - The PPJ monitors the rotational speed of the mechanical agitators to ensure adequate mixing of the waste.	3.10.1.2.1 3.10.1.2.3 3.10.2.1.2 3.10.4.2
M.2.7	Measure mechanical agitator power - The PPJ monitors the motor power of the mechanical agitators to ensure agitators are operating above the minimum amperage setpoint.	3.10.1.2.2 3.10.2.1.2 3.10.4.2
M.2.8	[**HOLD**] Operate safety air valves for sparging - The PPJ controls the automatic operation of the safety air valves to transition from normal non-safety ISA to safety ISA when flow rates drop below the setpoint.	3.10.1.3.3 3.10.2.1.3 3.10.4.2
M.2.9	Measure vessel contents level - The PPJ monitors the level of the vessel contents.	3.10.1.1.3 3.10.1.1.34 3.10.2.2.1 3.10.4.2
M.2.10	**[HOLD]** Operate valves for receiving glass formers - The PPJ provides automatic safety closure of the glass former feed isolation valve.	3.10.2.1.1 3.10.2.2.2 3.10.4.2
M.2.11	Operate air amplifiers - The PPJ system to receive seismic signal safety class (SC) interlock signal, which will automatically activate the air amplifiers on each HFP vessel in response to a seismic event.	3.10.2.1.4 3.10.4.2 3.11.2.1.1

2.2 System Classification

The HFP and HCP systems contain components with the following classifications/designations:

- ☒ Safety Class
- ☒ Safety Significant
- ☒ Dangerous Waste Permit affecting
- ☐ Air Permit affecting
- ☒ Waste Acceptance Impacting
- ☒ General

2.3 Basic Operational Overview

A functional description of the system is provided in Sections 2 and 2.1, which provide the context diagram for the system, interfaces with other systems, a simplified system diagram, a functional block diagram, and descriptions of the system functions. A basic operational system overview is described in this section. Detailed operational information is provided in Section 4.

The HCP and HFP systems are located in the HLW Facility of the Hanford Tank Waste Treatment and Immobilization Plant (WTP). The HCP receives HLW concentrate from the PT Facility HLP and delivers it to the HFP. The HCP does not include any equipment, only transfer lines. The HFP MFPVs receive the HLW concentrate from the HCP and interfaces with the ASX to characterize the waste. The HLW concentrate is mixed, sampled, characterized, and listed waste regulated under 42 USC 6901, *Resource Conservation and Recovery Act of 1976*. The waste must meet specific treatment and performance standards for storage and repository disposal of the final waste form in accordance with the specific requirements of US Department of Energy (DOE) Contract DE-AC27-01RV14136, *DOE/BNI WTP Contract Mod No. 304, Section C - Statement of Work* (WTP Contract). The sample results determine the quantity of each glass former added to the waste to produce glass that meets glass property and waste loading requirements for each particular batch. The proper proportions of various glass formers are prepared, mixed, moistened, added to the HLW concentrate, and mixed to prepare the HLW melter feed. A confirmatory sample is used to ensure the resultant glass product will be acceptable to the DOE. The resulting compliant melter feed is transferred from the MFPVs to the MFVs. The melter feed is transferred from the MFV into one of the two-joule heated HLW melters, which are part of the HMP. The melter glass output mixture will be poured into stainless-steel canisters. The vitrified waste in the canisters is referred to as immobilized high level waste (IHLW).

3 Design Requirements

3.1 Requirements

Requirements are documented in Sections 3.4 through 3.12. Each requirement statement is accompanied by a basis discussion (as needed) and the expected means of verification. Requirements must be met in design. If a requirement stated in this document cannot be met in design, a revision to the requirement needs to be pursued, if possible, or the design must be changed to meet the requirement.

Requirements preceded by "**[HOLD]**" may only be used in support of preliminary or committed design, which shall also be issued with appropriate holds per procedure 24590-WTP-3DP-G04B-00046, *Engineering Drawings*. These requirements may not be used in support of fabrication or construction.

The following abbreviations are used to designate the selected method for verification (refer to 24590-WTP-GPG-ENG-0161, *Technical Requirements Management*, for additional guidance concerning methods of verification):

(I) Inspection
(A) Analysis
(D) Demonstration
(T) Test

The following abbreviations are used to designate the organization responsible for performing the verification:

(ENG) Engineering

(CON) Construction
(SU) Startup
(COM) Commissioning
(SUP) Supplier
(SUB) Subcontractor
(SQR) Supplier Quality Representative
(REC) Receiving

3.2 Bases

Basis discussions are provided as needed to explain the decomposition or interpretation from the originating source requirement(s). Where a [**HOLD**] has been applied to a requirement, this section will include the basis for the [HOLD]. Where included, basis discussions provide supplementary information to help the reader understand the origin or intent of a requirement. Basis statements do not include requirements and are not to be considered as requirements.

3.3 References

The requirements include a source document reference and a DOORS® Unique Identification Numbers (hereafter referred to as Identification Numbers or IDs). Each unique source document reference, with ID number(s), is bracketed separately. Requirements may include a reference to the Section 2.1, Functional Description, listed in parentheses following the source document and ID number references. A complete listing of all source references is provided in Section 5.

3.4 General Requirements

3.4.1 Mission and Functional / Performance Requirements (Including States/Modes)

3.4.1.1 HFP Vessel Transfer Rates

3.4.1.1.1 MFPV to MFV Transfer Rate

Requirement: The HFP system shall provide a transfer flow rate of 44 gallons per minute (gpm) when transferring waste from MFPV to the MFV. [Section 6.3.3, 11.7.4, BOD, ID : DB-ENG-01-001 ID#13551, ID : DB-ENG-01-001 ID#11530](A.7).

Basis Discussion: Section 6.3.3 of the BOD includes a transfer rate of 44 gpm which should be the nominal target design for the pump but Section 7.7.4 of 24590-HLW-MVC-HFP-00001, Process Information for HFP Vessels (HFP-VSL-00001, HFP-VSL-00002, and HFP-VSL-00005, and HFP-VSL-00006), determined the minimum transfer rate to be 35 gpm. 44 gpm is considered to be the nominal transfer rate, recognizing that actual transfer rates may be faster or slower depending on the actual waste characteristics. In addition, 24590-101-TSA-W000-0004 -172-00001, Final Technical Basis for HLW Vitrification Stream Physical and Rheological Property Bounding Conditions, and PIBOD, 24590-WTP-DB-PET-09-001 table B-4 specify the transfer rate must be accomplished at a bounding rheology of 30 Pa and 40 cP while not exceeding 10 feet per second (fps). The upper velocity limit of 10 fps is considered bounding to prevent excessive erosion for slurries with glass formers (refer to 24590-WTP-GPG-M-0058, Section 4.5.1, *Minimum Flow Velocity for Slurry Lines*).

[ALARA]

The design throughput (processing) capabilities for the HCP and HFP systems are defined in Section 6.3.3 of the BOD. Software models are used to validate the design throughput capacity is met by the designed systems, inclusive of treatment processes, individual system and component capabilities, and equipment reliability and maintainability inputs. The HFP is designed to accommodate the receipt and treatment of specific waste volumes, using batch processing capabilities, to meet the design throughput requirements. The throughput rates are a function of the feed characteristics in a given batch volume. Batch volume and nominal transfer rate are used as inputs in the overall throughput analysis to ensure HCP and HFP systems operations are designed to support the 100 % capacity melter throughput for glass production of 3.75 metric tons of glass (MTG)/day/melter (total of 7.5 MTG per day), as stipulated in the WTP Contract.

Verification: Verification is expected to be achieved through the following:

Verif. Method	Verif. By	Plan	Notes/Comments
T	SUP	Obtain test data from the supplier validating the minimum flow rate.	**Component Tag Numbers (CTN):** HFP-PMP-00018A, -00018B, -00005A, -00005, -00007, and -00017. **Test Conditions:** Simulant with a viscosity of ≥40 cP and yield stress of ≥30 Pascal (Pa) or an approved alternative (i.e., in an approved supplier test plan) **Acceptance Criteria:** Meets 44 gpm or higher at test conditions
T	SU/COM	Perform integrated system test to verify the sample/transfer pumps are capable of providing a minimum transfer rate of 44 gpm from the MFPV to the MFV.	

3.4.1.1.2 MFV to Melter Transfer Rate

Requirement: [HOLD] The HFP system shall provide a transfer flow rate of 2 gpm when transferring waste from the MFV to the melter. [Sections 6.3.3, 11.7.4, BOD, ID : DB-ENG-01-001 ID#13552, ID : DB-ENG-01-001 ID#11530](A.10).

Basis Discussion: Section 6.3.3 of the BOD includes a transfer rate of 2 gpm, but calculation 24590-HLW-MVC-HFP-00001 determined the minimum transfer rate to be 2.53 gpm. The 2.53 gpm is considered to be the nominal transfer rate recognizing that actual transfer rates may be faster or slower depending on the actual waste characteristics. In addition, 24590-101-TSA-W000-0004-172-00001 specifies the transfer rate must be accomplished at a bounding rheology of 30 Pa and 40 cP while not exceeding 10 feet per second (fps). The rate (2.53 gpm) is based on the combined flow with both ADS pumps operating. The upper velocity limit of 10 fps is considered bounding to prevent excessive erosion for slurries with glass formers (refer to Section 4.5.1 of 24590-WTP-GPG-M-0058, Minimum Flow Velocity for Slurry Lines). This requirement is on "[HOLD]" until the BOD is updated to reflect the bounding minimum required transfer rate. [24590-WTP-ATS-MGT-14-0395].

[ALARA]

The design throughput (processing) capabilities are defined in the BOD Section 6.3.3. The HFP is designed to accommodate the receipt and treatment of specific waste volumes, using batch processing capabilities, to meet the design throughput requirements. The throughput rates are a function of the feed characteristics in a given batch. Melter feed rate is designed to support the 100 % capacity glass production rate of 7.5 total MTG per day.

Verification: Verification is expected to be achieved through the following:

Verif. Method	Verif. By	Plan	Notes/Comments
T	SUP	Obtain test data from the supplier validating the minimum flow rate.	**CTNs:** HFP-PMP-00001, -00002, -000014, and -00015. **Test Conditions:** Simulant with a viscosity of ≥40 cP and yield stress of ≥30 Pa or an approved alternative (i.e., in an approved supplier test plan) **Acceptance Criteria:** Meets 2 gpm or higher at test conditions
T	SU/COM	Perform integrated system test to verify the ADS pumps are capable of providing a minimum transfer rate of 2 gpm from the MFV to the melter.	2 gpm is based on the combine flow with both ADS pumps operating.

3.4.1.1.3 Minimum Sampling Transfer Rate

Requirement: The HFP system shall provide a transfer flow rate of 44 gpm when transferring waste from the MFPV to the ASX for sampling. [Sections 6.4, 6.4.1, *WAI Screening of HLW Glass Chemistry Processing Activities,* ROIN: 40-23471, ROIN: 40-23473][Section 11.7.4, BOD, ID : DB-ENG-01-001 ID#11530](A.3, A.6).

Basis Discussion: During normal operations the MFPV contents are circulated through an autosampler, which extracts a sample to the ASX for analysis in the Analytical Laboratory. Due to the solids content of the sample slurry, the recirculation line velocity must meet or exceed the flow rate to prevent settling of solids in the sample loop piping that could cause an unrepresentative sample to be taken CCN 200377, *WAI Screening of HFP Sample Loop Flow Meter*). In addition, 24590-101-TSA-W000-0004 -172-00001,Final Technical Basis for HLW Vitrification Stream Physical and Rheological Property Bounding Conditions, and PIBOD, 24590-WTP-DB-PET-09-001 table B-4 specify the transfer rate must be accomplished at a bounding rheology of 30 Pa and 40 cP while not exceeding 10 feet per second (fps). The MFVs are designed to interface with the ASX for sampling, but the pumps are not to be installed unless sampling is needed. A similar test, using the target flow rate of 44 gpm, was performed during the Vitreous State Laboratory's testing (refer to Section 4.4.10, Figures 4.108 and 4.109, 24590-101-TSA-W000-0009-195-00003, *Report – Pretreated Waste and Melter Feed Composition Variability Testing using HLW Simulants*).

[ALARA]

Verification: Verification is expected to be achieved through the following:

Verif. Method	Verif. By	Plan	Notes/Comments
T	SU/COM	Perform integrated system test to verify the sample/transfer pumps are capable of providing a minimum transfer rate of 44 gpm from the MFPV to the ASX.	

3.4.1.2 Design Life

3.4.1.2.1 Design (Operating) Life

Requirement: Except as noted in the table below, non-replaceable, permanent HCP and HFP system plant equipment listed in Table 3-1 shall be designed for a minimum design life of 40 years, inclusive of maintenance. All non-maintainable items of the HCP and HFP system equipment shall be designed to last the life of the facility (40 years). Design life of equipment shall consider the effects of chemical, radiological and thermal exposure.: [Section C.7(a)(1), WTP Contract, ID : DE-AC27-01RV14136 Section C ID#1243][Sections 11.1.1, 11.7.4, 11.8.3, 15.3.1, BOD, ID : DB-ENG-01-001 ID#11367, ID : DB-ENG-01-001 ID#11368, ID : DB-ENG-01-001 ID#11528, ID : DB-ENG-01-001 ID#11534, ID : DB-ENG-01-001 ID#12695][Sections 5.6.2, 5.6.5, PDSA - HLW Facility, ID : PSAR-ESH-01-002-04 ID#13888, ID : PSAR-ESH-01-002-04 ID#13899][Safety Criterion 4.4-1, 4.4-3 Appendix H - Sections 3.8, 4.0, SRD, ID : SRD-ESH-01-001-02 ID#954, ID : SRD-ESH-01-001-02 ID#955, ID : SRD-ESH-01-001-02 ID#979][Sections 14.1, 14.2, ORD, ID : RPT-OP-01-001 ID#1463, ID : RPT-OP-01-001 ID#1465, ID : RPT-OP-01-001 ID#1474].

Table 3–1 HCP and HFP Equipment and Components Design Life

Equipment/Component Description	Design Life (Years)
MFPVs	40
MFVs	40
Mechanical Agitators	>5
Sample/Transfer Pumps	>5 (Target design life is 20 yr)
ADS Pumps	>5
Demisters	40
Air Amplifiers	40
Steam Ejectors	40
Overflow Feature/Flapper Valves	40
Welded Piping (including hard-to-reach)	40
Jumpers (Mechanical, Instrument Air, and Electrical)	Target design life >5 yr*
Inline components (valves, instruments)	Target design life >5 yr*

* Equipment for which premature failure or need for replacement could lead to shutdown of the HCP or HFP System shall be designed for a minimum service life of 5 years to allow for replacement during melter outages.

Basis Discussion: Equipment and material selection is based on proven performance, value engineering principles, and fit-for-function principles. The selection of equipment and materials is further addressed in detail as the design progresses. Equipment design needs to consider the routine environmental exposures under normal operations for non-safety equipment; safety and post-accident monitoring (PAM) equipment also consider abnormal and emergency exposures-this minimizes the need for equipment maintenance, exposure, and radiological waste generation in radiological areas.
[ALARA]

Verification: Verification is expected to be achieved through the following:

Verif. Method	Verif. By	Plan	Notes/Comments
I	ENG	The "qualified" design life verification for safety and PAM SSCs is to be verified through review of equipment design as documented in equipment qualification packages (EQP).	Design life for safety and PAM equipment to be documented in equipment qualification package.
I	ENG	Review design to verify design life of non-replaceable, non-maintainable SSCs is documented in procurement documents and supported by supplier certificates of conformance.	May be documented in an evaluation/assessment

3.4.1.2.2 Materials of Construction and Erosion/Corrosion Design Parameters

Requirement: The HFP/HCP system shall be designed to include allowance for erosion/corrosion and use materials of construction , including wear resistant coatings in accordance with: [Safety Criterion 4.2-3, Appendix H Section 4.0, SRD, ID : SRD-ESH-01-001-02 ID#42, ID : SRD-ESH-01-001-02 ID#979][Appendix C.2.3.1 and Sections 6.1, 11.4.1, 11.8.3, 11.8.3.1, 14.10.1, 16.4.1.4, 16.4.2.8, BOD, ID : DB-ENG-01-001 ID#13033, ID : DB-ENG-01-001 ID#10291, ID : DB-ENG-01-001 ID#12147, ID : DB-ENG-01-001 ID#11545, ID : DB-ENG-01-001 ID#11547, ID : DB-ENG-01-001 ID#11548, ID : DB-ENG-01-001 ID#12836, ID : DB-ENG-01-001 ID#11419, ID : DB-ENG-01-001 ID#12784, ID : DB-ENG-01-001 ID#11427][Sections 9.1, 20.0 ORD, ID : RPT-OP-01-001 ID#1171, ID : RPT-OP-01-001 ID#1726].

Basis Discussion: The allowance for erosion/corrosion and applicable materials of construction are limited to those components that come into contact with the process fluids and that are required to maintain confinement/containment of those process fluids. Materials of construction that can withstand the erosive/corrosive low-activity waste effluents and chemicals are selected. The materials for the HFP system equipment and components should be selected based on the stream data presented in the process corrosion data sheet report. If vessel washing via internal spray mechanisms is needed to prevent or minimize corrosion, the operational limitations shall be identified in the vessel corrosion evaluation. Refer to Tables A-14, B-4, B-5, 24590-WTP-DB-PET-09-001, Process Inputs Basis of Design [PIBOD]); and 24590-WTP-M4C-V11T-00024, *WTP Process Flowsheet Mass & Energy Balance Analysis for Input to Material Selection Assessments,* for the fluid characteristics of the process streams.

The HFP/HCP system streams are accounted for in the erosion and corrosion analyses and are fabricated with materials of construction that can withstand the radioactive, thermal, and erosive/corrosive environment caused by the material. Design and verification is expected to be to the most recent issued revisions of the listed corrosion evaluations. If vessel washing via internal spray mechanisms is needed to prevent or minimize corrosion, the operational limitations are identified in the vessel corrosion evaluation.

Details of the allowed materials corrosion allowances can be found in:

- 24590-HLW-N1D-HFP-00002, *HFP-PMP-00007 and HFP-PMP-00017 HLW - Melter 1 and 2 Feed Vessel Sample - Recirc Pump*
- 24590-HLW-N1D-HFP-00003, *HFP-VSL-00001 and HFP-VSL-00005 HLW - HLW Melter 1 and 2 Feed Preparation Vessel*
- 24590-HLW-N1D-HFP-00004, *HFP-VSL-00002 and HFP-VSL-00006 HLW - Melter 1 and 2 Feed Vessel*

[ALARA]

Verification: Verification is expected to be achieved through the following:

Verif. Method	Verif. By	Plan	Notes/Comments
A/I	ENG	Perform an analysis/inspection of materials used in the HFP/HCP system which are in contact with, and are required to maintain confinement or containment of, the process fluids to verify that they are acceptable for use in the operating environment and have adequate erosion and corrosion allowances.	
I	ENG	Review design components used in the HFP/HCP system which are in contact with, and are required to maintain confinement or containment of, the process fluids for concurrence with analysis.	

3.4.1.2.3 Room Environment Conditions for Safety SSCs

Requirement: The safety equipment in the HLW HFP/HCP system credited with a safety function(s) and post-accident monitoring instruments (24590-HLW-RPT-ENS-12-002, HLW Preliminary Post Accident Monitoring Report) shall be designed and qualified to perform their safety functions as intended in the environment conditions associated with the events for which they are intended to respond, inclusive of aging effects throughout their qualified life. [Safety Criterion 4.4-1, 4.3-4, SRD, ID : SRD-ESH-01-001-02 ID#53, ID : SRD-ESH-01-001-02 ID#47][Section 11.7.3, BOD, ID : DB-ENG-01-001 ID#11524, ID : DB-ENG-01-001 ID#13215, ID : DB-ENG-01-001 ID#11526].

Basis Discussion: Safety SSCs designated as Safety Class (SC) and Safety Significant (SS) are designed and qualified to function as intended in the room environment conditions associated with the events for which they are intended to respond. The effects of aging on normal and abnormal functioning are considered in design and qualification. Data Sheet 24590-HLW-U0D-W16T-00001, HLW room environment datasheet, identifies environment conditions for rooms that house safety SSCs.

[ALARA]

Verification: Verification is expected to be achieved through the following:

Verif. Method	Verif. By	Plan	Notes/Comments
A/T	ENG	Perform analysis or testing to verify the ability of the SSCs credited with a safety or PAM function to withstand specified environmental conditions for the rooms in which they are installed.	Document in EQP. See HLW Room Environment Data Sheet (24590-HLW-U0D-W16T-00001) for room environmental conditions.
I	ENG	Review of design to verify compliance with the HLW room environment data sheet conditions.	May be accomplished by EQP or separate evaluation/assessment and supplier certificates of conformance.

3.4.1.2.4 Room Environment Conditions for Non-Safety SSCs

Requirement: Non-safety equipment/components shall be designed to operate and withstand the service conditions per Table 12-1 in the BOD. [Table 12-1 BOD, ID : DB-ENG-01-001 ID#13180][Sections 11.16, 16.1, ORD, ID : RPT-OP-01-001 ID#1373, ID : RPT-OP-01-001 ID#1606].

Basis Discussion: Non-safety SSCs are designed to function as intended in the room environment conditions associated with their location.

[ALARA]

Verification: Verification is expected to be achieved through the following:

Verif. Method	Verif. By	Plan	Notes/Comments
I	ENG	Review of design of non-safety, active SSCs to ensure compliance with BOD Table 12-1 conditions.	May be documented in an assessment/evaluation report.

3.4.1.2.5 Nonmaintainable Soft or Nonmetallic Parts

Requirement: The system equipment and components shall be designed with no nonmaintainable soft or nonmetallic parts that could be affected by the total integrated radiation dose including gamma and beta. [Section 16.4.1.1, BOD, ID : DB-ENG-01-001 ID#12770].

Basis Discussion: The HCP and HFP equipment and components are designed to withstand the internal beta radiation of the applicable process streams (i.e., HLP09, HFP06, or HFP03), and external gamma radiation (room) dose.

[ALARA]

Verification: Verification is expected to be achieved through the following:

Verif. Method	Verif. By	Plan	Notes/Comments
I	ENG	Review of Design to verify there are no hard-to-reach soft or nonmetallic parts.	May be accomplished by EQP or separate assessment.

3.4.1.2.6 Seismic Design

Requirement: The HCP and HFP system equipment, including PAM, shall be designed for seismic conditions in accordance with Table 3–2: [Sections 3.4.2.1.1.5, 3.4.2.1.1.6, 4.3.7.1, 4.3.7.1.4, 4.3.7.2, 4.3.7.2.4, 4.3.7.3, 4.3.7.3.4, 4.3.8, 4.3.8.4, 4.3.15, 4.4.7, 4.4.27 Appendix 4B, PDSA - HLW Facility, ID : PSAR-ESH-01-002-04 ID#11988, ID : PSAR-ESH-01-002-04 ID#12002, ID : PSAR-ESH-01-002-04 ID#12255, ID : PSAR-ESH-01-002-04 ID#15752, ID : PSAR-ESH-01-002-04 ID#15753, ID : PSAR-ESH-01-002-04 ID#15754, ID : PSAR-ESH-01-002-04 ID#15854, ID : PSAR-ESH-01-002-04 ID#12366, ID : PSAR-ESH-01-002-04 ID#12367, ID : PSAR-ESH-01-002-04 ID#12368, ID : PSAR-ESH-01-002-04 ID#15347, ID : PSAR-ESH-01-002-04 ID#12268, ID : PSAR-ESH-01-002-04 ID#12283, ID : PSAR-ESH-01-002-04 ID#12284, ID : PSAR-ESH-01-002-04 ID#12305, ID : PSAR-ESH-01-002-04 ID#12306, ID : PSAR-ESH-01-002-04 ID#15789][Appendix 3A, PDSA - PT Facility, ID : WTP-PSAR-ESH-01-002-02 ID#16258][Sections 16.4.2.1, 16.4.2.8, BOD, ID : DB-ENG-01-001 ID#12804, ID : DB-ENG-01-001 ID#12836].

Table 3–2 HCP and HFP Seismic Design Categories

Description	Seismic Category	Reference
MFPVs (HFP-VSL-00001 /00005)	SC-I	Sections 3.4.2.1.1.5, 4.3.7.1, PDSA - HLW Facility, ID : PSAR-ESH-01-002-04 ID#11988 and Section 16.4.2.1, BOD, ID : DB-ENG-01-001 ID#12804
MFVs (HFP-VSL-00002/00006)	SC-I	Sections 3.4.2.1.1.5, 4.3.7.1, PDSA - HLW Facility, ID : PSAR-ESH-01-002-04 ID#11988 and Section 16.4.2.1, BOD, ID : DB-ENG-01-001 ID#12804

Table 3–2 HCP and HFP Seismic Design Categories

Description	Seismic Category	Reference
Air amplifier system (HFP-EJCT-00006/00007/00008/00009)	**SC-I**	Sections 3.3.5.2.12, 4.3.7.2, PDSA - HLW Facility, ID : PSAR-ESH-01-002-04 ID#12283, ID : PSAR-ESH-01-002-04 ID#12284
HFP vessel overflow feature	**SC-I**	Sections 3.3.5.2.12, 4.3.7.3, PDSA - HLW Facility, ID : PSAR-ESH-01-002-04 ID#12305, ID : PSAR-ESH-01-002-04 ID#12306
Hydrogen mitigation system (air sparging and purging)	**SC-I**	Sections 3.4.2.1.1.3, 3.4.2.1.1.5, 4.3.8, 4.3.8.4, Appendix 4B, PDSA - HLW Facility, ID : PSAR-ESH-01-002-04 ID#11988 and Section 16.4.2.8, BOD, ID : DB-ENG-01-001 ID#12836
Piping (includes inline components, such as valves, jumpers, and instrument lines) shall be seismic category SC-III, except the following: • HCP double-walled (coaxial) transfer piping (inner pipe): seismic category **SC-I** • HCP double-walled (coaxial) transfer piping (outer pipe): seismic category **SC-II** • GFR line outside the melter cave, up to and including the isolation valve and the GFR air purge line: seismic category **SC-I**	**SC-III**	Section 4.4.7, PDSA - HLW Facility Exceptions: • Table 3A-13, PDSA - PT Facility, • Section 4.3.15, PDSA - HLW Facility)
ADS pumps and discharge lines (HFP-PMP-00001 00002, 0001400015)	**SC-III**	Section 4.4.27, PDSA - HLW Facility
PAM instruments	**Seismic category designations per PAM report***	Safety Criterion 4.3-4, SRD
Safety instrument air supply lines, valves, and the ISA check valves	**SC-I**	Section 4.3.8.4, PDSA - HLW Facility

*24590-HLW-RPT-ENS-12-002, *HLW Preliminary Post Accident Monitoring Report*

Basis Discussion: Section 2.4.12 of 24590-WTP-PSAR-ESH-01-002-01, *Preliminary Documented Safety Analysis to Support Construction Authorization; General Information* (PDSA – General) states the following: "All components and parts of the equipment that provide or contribute to the safety functions and accident monitoring functions, including equipment supports and anchorage, shall be qualified accordingly." This qualification ensures SSCs meet the designated seismic design requirements. Document 24590-WTP-SRD-ESH-01-001-02, *Safety Requirements Document Volume II* (SRD), Safety Criterion 4.1-3 details the equivalence of the WTP seismic category to the seismic performance category of DOE-STD-1020-94, *Natural Phenomena Hazards Design and Evaluation Criteria for Department of Energy Facilities*. The SRD also states that SSCs designated as safety SSCs are to be designed to withstand the effects of NPH events (e.g., earthquakes, wind, and floods) without the loss of capability to perform specified safety functions.

[ALARA]

Verification: Verification is expected to be achieved through the following:

Verif. Method	Verif. By	Plan	Notes/Comments
A/T	ENG/ SUP	Analysis or testing performed on safety SSCs to verify capability to withstand seismic event.	This is expected to be documented in the EQPs.
I	ENG	Review of design to verify conformance to the results of the analysis requirements and to verify that the safety function, as established in the preliminary documented safety analysis (PDSA) is correctly reflected in the equipment qualification documents.	EQP is issued and verified to align with the PDSA/DSA. Review is expected to be joint effort between design agency and EQ group.

3.4.1.2.7 Durability of Equipment Subject to Decontamination

Requirement: The HCP and HFP equipment subject to decontamination shall be capable of withstanding this process without any reduction of functionality through degradation of the electrical, mechanical, or any other components involved. [Sections 9.1, 20.0, ORD, ID : RPT-OP-01-001 ID#1171, ID : RPT-OP-01-001 ID#1726] [Section 11.8.3.1, BOD, ID : DB-ENG-01-001 ID#11547, ID : DB-ENG-01-001 ID#11548]

Basis discussion: N/A.

Verification: Verification is expected to be achieved through the following:

Verif. Method	Verif. By	Plan	Notes/Comments
I	ENG	Review design and vendor data to verify compliance.	

3.4.2 Nuclear Safety, ALARA, Environmental, and Other Regulatory Requirements

The WTP dangerous waste permit requirements for leak detection on the HCP transfer line from the PT Facility are included in the HLP SDD. The HCP and HFP systems sump leak detection requirements are included in HLW Facility functional design description and/or RLD SDD.

3.4.2.1 Safety Designations

Requirement: **[HOLD]** SSCs shall be designated as safety SSCs in accordance with Table 3–3 : [Safety Criterion 4.1-2, 4.1-3, 4.4-1, SRD, ID : SRD-ESH-01-001-02 ID#35, ID : SRD-ESH-01-001-02 ID#1519, ID : SRD-ESH-01-001-02 ID#53] [Sections 3.4.1.1.5, 3.4.1.2.5, 3.4.1.7.2.5, 3.4.1.7.3.5, 4.3.7.1, 4.3.7.2, 4.3.7.3, 4.3.8, 4.3.15, 4.4.4, 4.4.7, 4.4.16, 4.4.16.3, 4.4.23, 4.4.27.3, 4.4.30.3 PDSA - HLW Facility, ID : PSAR-ESH-01-002-04 ID#14047, ID : PSAR-ESH-01-002-04 ID#14103, ID : PSAR-ESH-01-002-04 ID#14110, ID : PSAR-ESH-01-002-04 ID#14043, ID : PSAR-ESH-01-002-04 ID#12975, ID : PSAR-ESH-01-002-04 ID#12976, ID : PSAR-ESH-01-002-04 ID#14031, ID : PSAR-ESH-01-002-04 ID#14037, ID : PSAR-ESH-01-002-04 ID#14038, ID : PSAR-ESH-01-002-04 ID#14039, ID : PSAR-ESH-01-002-04 ID#14040, ID : PSAR-ESH-01-002-04 ID#15754, ID : PSAR-ESH-01-002-04 ID#15755, ID : PSAR-ESH-01-002-04 ID#15854, ID : PSAR-ESH-01-002-04 ID#13134, ID : PSAR-ESH-01-002-04 ID#13411, ID : PSAR-ESH-01-002-04 ID#13456, PSAR-ESH-01-002-04 ID#12254][Section 16.4.2.8, BOD, ID : DB-ENG-01-001 ID#12836].

Note: Safety instruments are addressed separately in Section 3.10.3.1.

Table 3–3 HCP and HFP Safety Designations

Equipment/ Component Description	Safety Function	Safety Class	Safety Significant	References	
				Safety Class	Safety Significant
HFP vessels (HFP-VSL-00001/00005/00002/00006)	SC: Mitigates the consequences of a hydrogen explosion in HFP-VSL-00001/00005 and HFP-VSL-00002/00006 by providing confinement of radioactive materials. Reduces the probability of a radioactive material release from HFP-VSL-00001/00005 or HFP-VSL-00002/00006 by providing confinement of waste during and after a seismic event. SS: Reduces the probability of a radioactive material release by providing confinement.	Yes	Yes	Section 4.3.7.1, PDSA - HLW Facility	Section 4.4.16, PDSA - HLW Facility
HFP vessel overflow feature	SC: Reduces the probability of an overpressurization by providing an exhaust path. Reduces the probability of a hydrogen explosion by providing an exhaust path should the HOP/PVV become unavailable. Reduces the probability of a hydrogen explosion by ensuring an adequate headspace volume to dilute hydrogen. SS: Reduces the probability of vessel overpressurization and failure by providing an exhaust path.	Yes	Yes	Section 4.3.7.3, PDSA - HLW Facility	Section 4.4.16.3, PDSA - HLW Facility

Table 3–3 HCP and HFP Safety Designations

Equipment/ Component Description	Safety Function	Safety Class	Safety Significant	References	
				Safety Class	Safety Significant
Glass former feed line isolation valve interlocks and air purge	SC: Reduces the probability of a facility worker being exposed to radioactive material by closing the glass former isolation valve upon indication of potential for loss of confinement. SS: Reduces the probability of radiological exposure to a facility worker by closing the glass former isolation valve upon indication of potential for loss of confinement. Reduces the probability of radiological exposure to a facility worker by purging the glass former feed line	Yes	Yes	Section 4.3.15, PDSA - HLW Facility	Section 4.4.23, PDSA - HLW Facility
Hydrogen mitigation system (air sparging)	Reduces the probability of a hydrogen explosion in vessels HFP-VSL-00001/00005 or HFP-VSL-00002/00006 by mixing the waste upon failure of an agitator.	Yes	No	Section 4.3.8, PDSA - HLW Facility	N/A
Hydrogen mitigation system (air purging)	Reduces the probability of a hydrogen explosion in vessels HFP-VSL-00002/00006 or HFP-VSL-00001/00005 by providing safety purge air on loss of normal purge air.	Yes	No	Section 4.3.8, PDSA - HLW Facility	N/A
Air amplifier system	Reduces the probability of radioactive material spreading to C2 or C3 zones by drawing the HFP-VSL-00001/00005 and HFP-VSL-00002/00006 headspace atmospheres into the melter cave following a seismic event.	Yes	No	Section 4.3.7.2, PDSA - HLW Facility	N/A
MFPVs (HFP-VSL-00001/00005) High-high liquid level feed diversion valve interlock	Reduces the probability of the MFPVs (HFP-VSL-00001/00005) being overfilled by terminating feed transfer to the vessel when the high-high level setpoint is exceeded.	No	Yes	N/A	Sections 4.4.4, 3.4.1.2.5, PDSA - HLW Facility

Table 3–3 HCP and HFP Safety Designations

Equipment/ Component Description	Safety Function	Safety Class	Safety Significant	References	
				Safety Class	Safety Significant
Piping (including jumpers and inline components): o HLW concentrate receipt piping for transfers from the PT Facility o Piping from MFPVs (HFP-VSL-00001/00005) to the autosampler enclosure o Piping from MFPVs (HFP-VSL-00001/00005) to MFVs (HFP-VSL-00002/00006) o Piping from MFVs (HFP-VSL-00002/00006) to the autosampler enclosure o Piping from MFVs (HFP-VSL-00002/00006) to the melters o Flapper valves on the HFP overflows (overflows with flapper valves are SC) o Secondary offgas piping ▪ Note: Service and cooling piping lines are not SS.	Reduces the probability of a facility worker receiving an exposure that exceeds exposure standards. Reduces the probability of a radioactive material release by providing confinement. The piping/tubing in contact with waste (including safety air tubing as applicable) reduces the probability of a failure by providing confinement during and after multiple hydrogen explosions.	No	Yes	N/A	Sections 3.4.1.1.5, 4.4.7, 4.4.27, PDSA - HLW Facility
ADS pumps and discharge lines	Reduces the probability of a release by providing confinement during a hydrogen explosion.	No	Yes	N/A	Section 4.4.27.3 PDSA - HLW Facility
Mechanical agitators	Reduces the probability of a radioactive material release by agitator being designed so failure resulting in vessel impact will not breach the vessel.	No	Yes	N/A	Section 4.4.16.2.1, PDSA - HLW Facility

Basis Discussion: To ensure safety SSCs meet the design functions, Safety Criterion 4.4-1 of the SRD states: "Safety structures, systems, and components designated as SC and SS shall be designed and qualified to function as intended in the environments associated with the events for which they are intended to respond." This requirement is on "[HOLD]" due to differences between 24590-HLW-PL-ENS-13-0001, Safety Design Strategy for the High-Level Waste Facility (SDS), and the PDSA - HLW Facility and the resolution is expected to eliminate sparging. Also, the glass former feed line isolation valve interlock is designated as both SC and SS but does not meet single failure criteria (see Sections 3.10.2.1.1 and 3.10.2.2.2). [24590-WTP-ATS-MGT-14-0397]. [ALARA]

Verification: Verification is expected to be achieved through the following:

Verif. Method	Verif. By	Plan	Notes/Comments
I	ENG	Review of design to verify safety designations as identified in the equipment qualification datasheet.	EQP is issued and verified to align with the PDSA/DSA. Review is expected to be joint effort between design agency and EQ group.

3.4.3 System Interface Requirements

Requirements associated with specific system interfaces are discussed in the subsequent requirement sections titled "System Interface Requirements." The HCP and HFP system interfaces are listed in Table 3–4.

Table 3–4 HCP and HFP System Interfaces

System Locator	System Name	Nature of Interface
ASX	Autosampling System	ASX-SMPLR-00029 and ASX-SMPLR-00042 receive samples from MFPVs to characterize the batch waste.
C5V	C5 Ventilation System	Provides ventilation of the melter cave to remove headspace gas vented by the HFP vessel air amplifiers or overflow features when the HOP/PVV is unavailable.
DIW	Demineralized Water System	Supplies demineralized water via ASX and PWD to MFPVs and MFVs for D&D washdowns and concentrate dilution, to flush transfer lines and spargers, to prime sample/transfer, and to flush ADS pumps.
GFR	Glass Formers Reagent System	GFR-TK-00025 and GFR-TK-00031 supply glass formers to MFPVs.
HCP	HLW Concentrate Receipt Process System	Supplies HLW concentrate to MFPVs from PT HLP.
HFP	HLW Melter Feed Process System	Receives feed concentrate from HCP.
HLP	HLW Lag Storage and Feed Blending Process System	HLP-VSL-00028 supplies HLW concentrate to MFPVs via PT HLP and HCP transfer piping.
HMP	HLW Melter Process System	HMP-MLTR-00001 and HMP-MLTR-00002 receive melter feed from MFVs.
HOP	HLW Primary Offgas System	Negative headspace pressure is maintained in the HFP vessels by the PVV and HOP systems.
HPS	High Pressure Steam System	Supplies steam to the steam ejectors in the HFP vessels.
HSH	HLW Melter Cave Support Handling System	Provides mechanical handling components used to remotely remove and replace all maintainable or replaceable HFP equipment and components within the melter caves.

Table 3–4 HCP and HFP System Interfaces

System Locator	System Name	Nature of Interface
ISA/ Safety ISA	Instrument Service Air System	The safety ISA provides air for vessel sparging/purging, GFR line purging, air supply to the air amplifiers (when activated), as well as motive force to operate pneumatically operated safety valves. (These functions may be supported by non-safety ISA but must transition to safety ISA upon loss of the non-safety source) The non-safety ISA supplies instrument air to non-safety HFP instruments, control valves, and ADS pumps.
LVE	Low Voltage Electrical System	Supplies electrical power to the HFP equipment and instruments.
NAR	Nitric Acid Reagent System	Supplies nitric acid reagent for decontamination activities.
PCJ	Process Control System	Provides operational control of the process instruments and equipment. Components without SC/SS functions receive control signals.
PCW	Plant Cooling Water System	Supplies cooling water to the HFP vessel cooling jackets.
PPJ	Programmable Protection System	Provides automatic safety control functions.
PVV	Process Vessel Vent Exhaust System	Vessel vent header receives vents from MFPVs and MFVs. Negative headspace pressure is maintained in the HFP vessels by the PVV and HOP systems.
PWD	Plant Wash and Disposal System	Supplies demineralized water to HFP vessels for washdowns, concentrate dilution, to prime sample/transfer pumps. The PT Facility's PWD-VSL-00043 receives flush water from the HLW concentrate transfer line from PT HLP to MFPV.
RLD	Radioactive Liquid Waste Disposal System	RLD-VSL-00008 receives D&D washdowns MFPVs and MFVs.
UPE	Uninterruptible Power Electrical System	Supplies back-up power for Safety SSCs requiring electrical power.

3.4.4 Other Technical, Specialty, Operations and Maintenance Requirements

3.4.4.1 Remotely Maintainable or Replaceable Equipment and Components

Requirement: The HFP maintainable or replaceable equipment and components shall be designed with remote handling features capable of being removed and re-installed via interface with the HLW melter cave support handling system (HSH), as shown in Table 3–5. [Sections 5.2, 6.2, 8.1.3, 9.1, 14.1, 14.2, 14.10, ORD, ID : RPT-OP-01-001 ID#1047, ID : RPT-OP-01-001 ID#1801, ID : RPT-OP-01-001 ID#1190, ID : RPT-OP-01-001 ID#1474, ID : RPT-OP-01-001 ID#1463, ID : RPT-OP-01-001 ID#1147, ID : RPT-OP-01-001 ID#1532][Sections 6.7, 8.1.2, 9.12, 9.4.2, 11.3.2, 11.3.2.3, 11.4.1, 11.4.4, 11.5.1, 11.7.4, 11.8.3.1, 12.6.3, BOD, ID : DB-ENG-01-001 ID#10415, ID : DB-ENG-01-001 ID#10698, ID : DB-ENG-01-001 ID#11150, ID : DB-ENG-01-001 ID#10966, ID : DB-ENG-01-001 ID#11459, ID : DB-ENG-01-001 ID#10970, ID : DB-ENG-01-001 ID#11390, ID : DB-ENG-01-001 ID#11391, ID : DB-ENG-01-001 ID#11392, ID : DB-ENG-01-001 ID#11398, ID : DB-ENG-01-001 ID#11420, ID : DB-ENG-01-001 ID#11424, ID : DB-ENG-01-001 ID#11439, ID : DB-ENG-01-001 ID#11549, ID : DB-ENG-01-001 ID#11425, ID : DB-ENG-01-001 ID#11426, ID : DB-ENG-01-001 ID#11428, ID : DB-ENG-01-001 ID#11547, ID : DB-ENG-01-001 ID#11548, ID : DB-ENG-01-001 ID#11534, ID : DB-ENG-01-001 ID#11736].

Table 3–5 Remotely Maintainable or Replaceable Equipment and Components

Equipment/Component Description	Remotely Removable and Replaceable
MFPVs	Yes
MFVs	Yes
Mechanical Agitators	Yes
Sample/Transfer Pumps	Yes
ADS Pumps	Yes
Demisters	Yes
Air Amplifiers	Yes
Steam Ejectors	Yes
Overflow Feature/Flapper Valves	Yes
Jumpers (Mechanical, Instrument Air, and Electrical)	Yes
Inline Components (valves/instruments)	Yes*

*This may be accomplished by removing and replacing the jumper section including the inline component (valve/instrument).

Basis Discussion: Remote maintenance operations generally are to be performed in the designated maintenance area. In-cave equipment disassembly, removal to maintenance area, and/or replacement is accomplished by local remote handling equipment or by remote handling equipment in dedicated maintenance areas or caves. In general, process systems and equipment within cells or caves that could fail during operations are designed for safe recovery, replacement, or redundancy. Remote handling features help to facilitate interfacing with equipment or components when using remote handling equipment such as in-cave cranes, power manipulators, or master-slave manipulators.

[ALARA]

Verification: Verification is expected to be achieved through the following:

Verif. Method	Verif. By	Plan	Notes/Comments
I	**ENG**	Review of design using a software program to verify that all replaceable components are remotable.	May be documented in an assessment/evaluation. Recommend using a software program such as "IGrip" (or similar).
D	**SU/COM**	Demonstrate remotability in accordance with 24590-WTP-PL-RACT-RT-0001, *WTP Remotability Verification Plan.*	Physical demonstration

3.4.4.2 Redundancy

Requirement: **[HOLD]** The system design shall incorporate redundant waste transfer capability necessary to achieve the throughput glass production rate. The HFP design shall include a cross-connection between the two melter trains that allows contents from the MFPV or MFV in one melter train to be transferred to the corresponding vessel in the other melter train. [Sections 6.3.3, 11.3.2, 11.4.2, BOD, ID : DB-ENG-01-001 ID#10359, ID : DB-ENG-01-001 ID#11392, ID : DB-ENG-01-001 ID#11434] [Section 14.3, ORD, ID : RPT-OP-01-001 ID#1480] (F.1).

Basis Discussion: This requirement is decomposed from the BOD and ORD requirements to provide redundancy. The HFP/HCP piping has been designed to incorporate redundancy for process flows. The

implementation of a melter feed cross-connection allows additional flexibility and supports a feed-forward strategy (refer to Section 4.1.1, 24590-HLW-TB-ENG-13-0002, *Engineering Design Decision for HLW HFP*). In general, process systems and equipment within cells or caves that could fail during operations are designed for safe recovery, replacement, or redundancy. The need for redundancy has been evaluated in the basis of performing a failure modes, effects, and criticality analysis. This requirement is on "**[HOLD]**" due to a PDSA revision which specifies requirements for the HFP transfer cross-connection. [24590-WTP-ATS-MGT-14-0398].

[ALARA]

Verification: Verification is expected to be achieved through the following:

Verif. Method	Verif. By	Plan	Notes/Comments
I	ENG	Review of the design to verify the capability exists to transfer HFP vessel contents between the respective MFPVs and MFVs in both melter trains.	

3.4.4.3 Redundant Waste Transfer Supply and Flush

Requirement: **[HOLD]** The HFP design shall include redundant transfer capability in the event one transfer line from the PT Facility to the HLW Facility becomes unavailable. To support this capability, the design shall also provide an alternate flush method from the HLW Facility to the PT Facility for either remaining transfer line. [Sections 6.2.1, 11.3.2, 11.4.2, 14.3, BOD, ID : DB-ENG-01-001 ID#10322, ID : DB-ENG-01-001 ID#10359, ID : DB-ENG-01-001 ID#11392, ID : DB-ENG-01-001 ID#11434, ID : RPT-OP-01-001 ID#1480] [Sections 14.3, 20.0, ORD, ID : RPT-OP-01-001 ID#1730, ID : RPT-OP-01-001 ID#1725] (B.1).

Basis Discussion: This requirement provides capability to continue normal processing if the Project loses a transfer line and will provide a connection that can be flushed while still allowing normal processing and flushing without impacting vessel batch volumes. The implementation of the capability to flush the transfer line from the HLW Facility provides additional operational flexibility. Flushing controls of the transfer line will help to remove waste and prevent plugging (refer to Section 4.1.4 of 24590-HLW-TB-ENG-13-0002 and Section 4.10.3 of 24590-HLW-ES-ENG-13-003, *Risk Reduction Study for the High Level Waste (HLW) Facility: Failure Modes, Effects, and Criticality Analysis (FMECA), In-Service Inspection (ISI), and Plugging*). This requirement is on "**[HOLD]**" because this change has not yet been documented in the safety basis or in the change control process. [24590-WTP-ATS-MGT-14-0399].

[ALARA]

Verification: Verification is expected to be achieved through the following:

Verif. Method	Verif. By	Plan	Notes/Comments
I	ENG	Review of the design to verify redundant transfer capability of HLW concentrate from the PT Facility HLP to the HLW MFPV.	
I	ENG	Review of the design to verify the capability to flush the HLW concentrate transfer lines from the HLW Facility to the PT Facility, using water from the HLW Facility.	
D	SU/COM	Demonstrate the capability to flush the HLW concentrate transfer lines from the HLW Facility to the PT Facility, using water from the HLW Facility.	

3.4.4.4 Prevent Out-of-Specification Batch Transfers to RLD System

Requirement: [**HOLD**] The piping design shall include provisions to prevent out-of-specification batch transfers from the HFP vessels to the RLD system. Transfers from the HFP vessels to the RLD system are only permitted for vessel decommissioning purposes. [Section 7.1, ORD, ID : WTP-RPT-OP-01-001 ID#1104] (H.1).

Basis Discussion: Section 3.4.1.10.3.5 of 24590-WTP-PSAR-ESH-01-002-04, *Preliminary Documented Safety Analysis to Support Construction Authorization; HLW Specific Information* (PDSA – HLW Facility) states the following: "To reduce the probability of a hydrogen explosion in the plant wash and drains vessel (RLD-VSL-00008), a blind flange prevents inadvertent transfers of non-Newtonian fluids from HFP-VSL-00001/00005 or HFP-VSL-00002/00006." The design no longer allows transferring out-of-specification batches from the HFP vessels to the RLD during plant operations to remove a non-Newtonian hydrogen generation source to the RLD. The steam ejector and jumpers are only to be installed after decontaminating the HFP vessels, which requires the ability to minimize the residual heel volume and transfer the rinse/flush liquid to the RLD. This requirement is on "[**HOLD**]" because the hazards analysis and preliminary documented safety analysis (PDSA) have not yet been updated to reflect elimination of high solids waste being sent to the RLD vessels. In addition, an exemption to section 7.1 of the ORD must be documented as described in CR 24590-WTP-GCA-MGT-15-01057. The removal of a transfer path from HFP to RLD and then the PT facility is contrary to ORD section 7.1 but will be documented within the CR evaluation for acceptability. [24590-WTP-ATS-MGT-14-0400].

[ALARA]

Verification: Verification is expected to be achieved through the following:

Verif. Method	Verif. By	Plan	Notes/Comments
I	ENG	Review of the design to verify that the steam ejector and jumpers, used to support transfers from the HFP vessels to the RLD, are not normally installed	

3.4.4.5 Startup Testing and Commissioning

Requirement: The system design shall accommodate provisions, as necessary, to support startup and commissioning testing as identified in Appendix A. [Section 11.4.7, 11.5.1, BOD, ID : DB-ENG-01-001 ID#11448, ID : DB-ENG-01-001 ID#11449, ID : DB-ENG-01-001 ID#11459][Section 9.1, ORD, ID : RPT-OP-01-001 ID#1173].

Basis Discussion: Additional nozzles, branch lines, removable spools or other provisions needed to support identified testing are to be accommodated in the design, as jointly determined by the design agency, Startup and Commissioning during the design development and review process, with consideration given to the tests and demonstration activities required for requirement verification specified in Appendix A. This may include, but is not limited to, provisions to support the introduction or removal of fluids, gases, reagents or simulants; or the availability of special test ports, sampling ports, or temporary instruments or instrument lines.

[ALARA]

Verification: Verification is expected to be achieved through the following:

Verif. Method	Verif. By	Plan	Notes/Comments
A	ENG	Analysis of the HLW PCW to determine the provisions needed to support tests/demonstrations to be performed during startup and commissioning.	May be documented in an assessment/evaluation.Startup and Commissioning to participate in the assessment.

Verif. Method	Verif. By	Plan	Notes/Comments
I	ENG	Review design to verify requirement is met based on established tests/demonstrations to be performed during startup and commissioning.	May be documented in an assessment/evaluation report. Startup and Commissioning to participate in the assessment.

3.4.4.6 MFPV Sump Transfer Route

Requirement: [HOLD] The HFP system design shall incorporate features to receive and reprocess recovered spilled material from sumps HOP-SUMP-00003/00008, HPH-SUMP-00003/00004, HCP-SUMP-00001, HSH-SUMP-00003/00007, and HFP-SUMP-00002/00005. (A.1, A.1.1).

Basis Discussion: The sump transfer route was developed due to concerns with Non-Newtonian waste entering the RLD system and accumulation of hydrogen gases which could cause a hydrogen explosion. As such, the HFP vessel sumps were re-routed from RLD to the MFPVs. This requirement is on [**HOLD**] due to proposed changes associated with the PDSA to prevent high solids waste in sumps from being sent to the RLD system. [24590-WTP-ATS-MGT-15-0444].

[ALARA]

Verification: Verification is expected to be achieved through the following:

Verif. Method	Verif. By	Plan	Notes/Comments
I	ENG	Review design to verify the capability exists to transfer recovered spilled material from the sumps HOP-SUMP-00003/00008, HPH-SUMP-00003/00004, HCP-SUMP-00001, HSH-SUMP-00003/00007, and HFP-SUMP-00002/00005.	May be documented in an assessment/evaluation.

3.4.4.7 Equipment Tolerances

Requirement: Systems and equipment requiring remote installation and maintenance shall have tolerances specified in their design and be as-built with sufficient precision to provide for the ability to remotely install, connect, disconnect, and reconnect all replaceable components. [Section 14.10, ORD, ID: WTP-RPT-OP-01-001 ID#1532].

Basis Discussion: As-builts of remote equipment and permanent plant interfaces for the remote equipment provide the ability to remotely install, connect, disconnect, and reconnect all replaceable components.

Verification: Verification is expected to be achieved through:

Verif. Method	Verif. By	Plan	Notes/Comments
I	ENG	Review supplier fabrication and installation drawings to verify compliance with dimensions and tolerances specified in the purchase order	Accomplished during review of submitted G-321-E documents
I	SQR	Inspect equipment to verify dimensions conform to the provided as-built drawings (within established tolerances).	This is expected to be accomplished via the MAP.

Verif. Method	Verif. By	Plan	Notes/Comments
I	CON	Take as-built measurements of installed equipment and verify compliance with dimensions and tolerances specified in supplier installation drawings and manuals	Record in equipment inspection record.

3.5 Vessel Requirements

3.5.1 Mission and Functional / Performance Requirements (Including States/Modes)

3.5.1.1 Vessel Design and Operating Conditions

3.5.1.1.1 Codes and Standards

Requirement: The HFP vessels shall be designed to American Society of Mechanical Engineers (ASME) *Boiler and Pressure Vessel Code (BPVC)*, Section VIII, Division 1. [Sections 4.3.7.1, 4.4.16, 4.4.16, PDSA - HLW Facility, ID : PSAR-ESH-01-002-04 ID#15906, ID : PSAR-ESH-01-002-04 ID#12255, ID : PSAR-ESH-01-002-04 ID#13134, ID : HLW-RPT-ESH-01-001 ID#12808, ID : PSAR-ESH-01-002-04 ID#13143, ID : PSAR-ESH-01-002-04 ID#13144, ID : PSAR-ESH-01-002-04 ID#13145, ID : PSAR-ESH-01-002-04 ID#13146][Safety Criterion 4.2-2, Appendix L, SRD, ID : SRD-ESH-01-001-02 ID#41, ID : SRD-ESH-01-001-02 ID#55, ID : SRD-ESH-01-001-02 ID#1254, ID : SRD-ESH-01-001-02 ID#1255][Sections 11.7.1, 16.4.2.4, BOD, ID : DB-ENG-01-001 ID#11510, ID : DB-ENG-01-001 ID#12812].

Basis Discussion: None.

Verification: Verification is expected to be achieved through the following:

Verif. Method	Verif. By	Plan	Notes/Comments
A	ENG	Perform an analysis of the HFP vessel design in accordance with ASME BPVC Section VIII, Division 1.	Documented in DVR.
I	ENG	Review of design to verify conformance to the results of the analysis.	Documented in DVR.
I	ENG	Review of supplier provided design and quality records to verify conformance.	May be documented in an assessment/evaluation.

3.5.1.1.2 Size (Batch Volume Capacity)

Requirement: The HFP vessels shall each be designed for a minimum batch volume of 5,500 gallons. The stated vessel maximum capacities in the Dangerous Waste Permit will be aligned with the maximum capacities of the procured vessels. [Section 6.3.3, BOD, ID : DB-ENG-01-001 ID#13551, ID : DB-ENG-01-001 ID#13552][WTP Contract, Section C - Standard 3: (c)(4), ID : DE-AC27-01RV14136 Section C ID#928](A.1, A.2, M.1.1, M.1.2).

Basis Discussion: The batch volume includes HLW concentrate, line flushes, and glass formers. The normal operating batch volume is assumed to be 5000 gallons (gal), with a bounding batch volume of 5200 gal based on maximum flowsheet conditions. The maximum batch volume of 5500 gal will allow for at least 300 gal of reserve volume for adjusting the batch composition using additional glass formers (up to 3800 pounds) (refer to Section 8.1 of 24590-HLW-ES-PR-04-0001, *HLW Melter Feed and Feed Preparation Vessel Utilization and Time Cycle Evaluation*).

The vessel sizing calculation is required per WTP Contract, Section C - Standard 3: (c)(4), which states, "Calculations for Equipment Sizing: The calculation and technical basis for the capacity of major vessels,

equipment, and piping shall be provided. The basis shall include, as applicable, sample analysis turnaround times and address reliability, availability, maintainability, and inspectability ...."

Verification: Verification is expected to be achieved through the following:

Verif. Method	Verif. By	Plan	Notes/Comments
A	ENG	Perform an analysis to document that the HFP vessels are sized to accommodate a 5,500 gal batch volume.	
I	ENG	Review of design to verify conformance to the results of the analysis.	
I	ENG	Review design to verify vessel maximum capacities conform to the stated values in the permit.	Verification must preceded receipt of waste.

3.5.1.1.3 Temperature

Requirement: The HFP vessel design shall provide the capability to maintain the process fluid temperature between the vessel upper and lower design temperature limit and/or upper temperature limit established to preclude cavitation in the sample/transfer pumps. [Sections 6.1, 6.4, BOD, ID : DB-ENG-01-001 ID#10291], ID : DB-ENG-01-001 ID#10374](M.1.1).

Basis Discussion: The HFP vessels are cooled to achieve required processing conditions by removing heat generated from the radioactive decay of the vessel contents and mechanical agitator shaft work. Section 6.4 of the BOD states the secondary cooling loop is provided to equipment in contact with radioactive material.

Verification: Verification is expected to be achieved through the following:

Verif. Method	Verif. By	Plan	Notes/Comments
A	ENG	Perform an analysis to determine the upper design temperature limit for the vessels inclusive of any temperature limit to preclude cavitation of the sample/transfer pumps.	
A	ENG	Perform an analysis to document that the combined HFP/PCW design is capable of maintaining the required temperature range.	
I	ENG	Review of HFP vessel design, including interface with PCW system, to verify conformance to the results of the analysis.	

3.5.1.1.4 Pressure

Requirement: The HFP vessels shall be designed to at least the maximum negative pressure generated by the HLW melter offgas treatment process system (HOP). (M.1.1).

Basis Discussion: The HFP vessels are designed to withstand the maximum negative pressure vacuum created by the HLW HOP booster and stack fans. The HFP vessels are designed to withstand the maximum positive pressure before the overflow feature opens. Note: Section 7.6 of calculation 24590-HLW-MVC-HFP-00001determined the design operating pressure range to be between 1.6 in. water gauge and -151 in. water gauge.

[ALARA]

Verification: Verification is expected to be achieved through the following:

Verif. Method	Verif. By	Plan	Notes/Comments
A	ENG	Perform an analysis to determine the maximum negative pressure and verify the design can withstand at least that pressure.	Refer to ASME BPVC Section VIII, Division 1 calculation, documented in DVR.
I	ENG	Review of design to verify conformance to the results of the analysis.	Documented in DVR.

3.5.2 Nuclear Safety, ALARA, Environmental, and Other Regulatory Requirements

3.5.2.1 Vessel Overflow Feature Design

3.5.2.1.1 Unobstructed Flow Path

Requirement: Each HFP vessel shall include an overflow feature designed to provide an unobstructed escape flow path for liquids or gases during abnormal operating conditions (e.g., loss of negative pressure or vessel contents in excess of operational level limits). Overflowed liquid shall be directed towards the melter cave sump. [Sections 3.3.5.1.11, 3.3.5.2.3, 4.3.7.3, 4.4.16.3, 5.6.2, PDSA - HLW Facility, ID : PSAR-ESH-01-002-04 ID#10884, ID : PSAR-ESH-01-002-04 ID#13888, ID : PSAR-ESH-01-002-04 ID#14475, ID : PSAR-ESH-01-002-04 ID#10918, ID : PSAR-ESH-01-002-04 ID#10919, ID : PSAR-ESH-01-002-04 ID#15753, ID : PSAR-ESH-01-002-04 ID#13167][Section 6.7.5, BOD, ID : DB-ENG-01-001 ID#10430](C.1).

Basis Discussion: The HFP vessel overflow feature prevents excessive airflow into the vessel through the engineered vessel overflow during normal operations, without preventing the vessel overflow from providing required safety functions (Section 3.1.3, 24590-HLW-3PS-HFP-T0003, *Engineering Specification for High Level Waste Melter Feed System Demisters, Air Ejectors and Overflow Flapper Valves*). The overflow feature is designed to maintain the headspace volume in HFP vessels. The headspace volume in the HFP vessels is maintained by designing the overflow feature to account for abnormal operating conditions, such as from operator error or equipment malfunction, that result in positive pressure or vessel content levels in excess to normal operations. The overflow feature provides a pathway for the vessel liquids and headspace atmospheres to exit the HFP vessels. Contained within the overflow is an opening mechanism which opens upon differential pressure across the disc to create the unobstructed path. This line is designed to prevent the buildup of material that could cause blockages. The overflow feature directs liquid that overflows from the HFP vessels to the respective melter cave sump and provides a backup exhaust path should the HOP and process vessel vent exhaust system (PVV) fail.

Verification: Verification is expected to be achieved through the following:

Verif. Method	Verif. By	Plan	Notes/Comments
I	ENG	Review of HFP vessel design to verify incorporation of an overflow feature.	Documented in DVR.

3.5.2.1.2 Operability

Requirement: The HFP vessel overflow feature shall be designed to prevent its opening mechanism from fully sealing closed. [Sections 4.3.7.3, 5.6.2, PDSA - HLW Facility, ID : PSAR-ESH-01-002-04 ID#15753, ID : PSAR-ESH-01-002-04 ID#13888](C.1).

Basis Discussion: The overflow feature is to be designed to not fully close during normal operations to prevent accumulation of solids around the overflow feature opening mechanism's sealing surfaces that could cause it to adhere closed to the vessel. This could result in the overflow feature failing to open under abnormal operations.

Verification: Verification is expected to be achieved through the following:

Verif. Method	Verif. By	Plan	Notes/Comments
I	ENG	Review of HFP vessel design to verify an opening mechanism, of the overflow feature, to not be fully sealed to the vessel when closed.	Documented in DVR.

3.5.2.1.3 Size

Requirement: The HFP vessel overflow feature design shall be sized to at least meet the maximum in-flow rate at a bounding design rheology, while maintaining a minimum vapor headspace to allow for hydrogen dilution and prevent liquid flooding into the vessel ventilation header. [Sections 3.3.5.1.11, 4.3.7.3, 4.4.16.3, 5.6.2, PDSA - HLW Facility, ID : PSAR-ESH-01-002-04 ID#10884, ID : PSAR-ESH-01-002-04 ID#15753, ID : PSAR-ESH-01-002-04 ID#13169, ID : PSAR-ESH-01-002-04 ID#13888][Section 6.7.5, BOD, ID : DB-ENG-01-001 ID#10430](C.1).

Basis Discussion: The overflow feature reduces the potential for a hydrogen explosion by ensuring an adequate headspace volume to dilute hydrogen generated in the HFP vessels.

Verification: Verification is expected to be achieved through the following:

Verif. Method	Verif. By	Plan	Notes/Comments
A	ENG	Perform an analysis to document the configuration, sizing, and location of the HFP vessel overflow feature will meet the required headspace for maximum inflow rate at the bounding design rheology.	Documented in DVR.
I	ENG	Review of design to verify conformance to the analysis results.	Documented in DVR.

3.5.2.2 Waste Acceptance Impacting Qualification Plan for MFPVs

Requirement: The MFPVs shall have an internal geometric configuration and baffle design in accordance with the waste acceptance impacting (WAI) requirements. [Section 6.3.1, *WAI Screening of HLW Glass Chemistry Processing Activities*, ROIN: 40-23466](A.2).

Basis Discussion: None.

Verification: Verification is expected to be achieved through the following:

Verif. Method	Verif. By	Plan	Notes/Comments
I	ENG	Review of design to verify conformance to the WAI dimensional requirements.	Documented in completed 24590-HLW-WIQP-MS-09-0001, *HLW HFP Feed Preparation Vessels*

3.5.2.3 Hydrogen Explosion

Requirement: [**HOLD**] The HFP vessels shall maintain integrity following a pressure front generated by an internal hydrogen explosion. [Sections 4.3.7.1, 4.3.7.1.1, 4.3.7.1.3, PDSA - HLW Facility, ID : PSAR-ESH-01-002-04 ID#12254, ID : PSAR-ESH-01-002-04 ID#12255, ID : PSAR-ESH-01-002-04 ID#12256, ID : PSAR-ESH-01-002-04 ID#12263].

Basis Discussion: The functional requirement in Section 4.3.7.1 of the PDSA - HLW Facility states, "Vessels maintain integrity following pressure front generated by a hydrogen explosion" is to be considered on "HOLD" until Engineering and Nuclear Safety Engineering determine the path forward to resolve this functional requirement. The HFP vessels were not designed to withstand a hydrogen explosion nor have they been analyzed to determine if they could withstand a hydrogen explosion. However, the HFP vessels are designed with safety controls and design features to prevent accumulation of hydrogen in excess of the lower flammability limit (LFL) thereby preventing a hydrogen explosion from occurring. They are also designed in accordance with ASME BPVC Section VIII, Division 1. [24590-WTP-ATS-MGT-14-0401].

Verification: Verification is expected to be achieved through the following:

Verif. Method	Verif. By	Plan	Notes/Comments
A	ENG	Perform an analysis to document the HFP vessels maintain integrity after a hydrogen explosion.	Documented in DVR.
I	ENG	Review of design for conformance to the analysis results.	Documented in DVR.

3.5.3 System Interface Requirements

3.5.3.1 PT Facility HLP - Receive HLW Concentrate

Requirement: [**HOLD**] The MFPVs shall interface with the HCP transfer line to receive HLW concentrate from the PT Facility HLP at a minimum required transfer rate of 55 gpm. [Section 6.3.1, BOD, ID : DB-ENG-01-001 ID#13542] [Sections 2.2, 3.2, IHLW Waste Form Compliance Plan for WTP, ID : HLW-PL-RT-07-0001 ID#10202, ID : HLW-PL-RT-07-0001 ID#10230][Sections 4.4.7, 4.4.7.2, PDSA - HLW Facility, ID : PSAR-ESH-01-002-04 ID#15854, ID : PSAR-ESH-01-002-04 ID#13015](A.1).

Basis Discussion: The HCP transfer line provides the interface between the PT Facility and HLW Facility to support the glass throughput production. Minimum transfer rate and line velocity values to support glass production and to preclude line plugging will be provided in the PT Facility HLP SDD. Section 6.3.1 of the BOD includes a transfer rate of 55 gpm, but Section 7.1 of calculation 24590-PTF-MPC-HLP-00016, *Pump and Line Sizing Calculation for Pumps HLP-PMP-000019A/B* determined the minimum transfer rate to be 56 gpm. This requirement is on "[**HOLD**]" until the BOD is updated to reflect the bounding minimum required transfer rate. [24590-WTP-ATS-MGT-14-0402].

Verification: Verification is expected to be achieved through the following:

Verif. Method	Verif. By	Plan	Notes/Comments
I	ENG	Review design to verify the HCP transfer line provides a connection between the PT Facility HLP and the HLW Facility MFPVs.	
I	ENG	Review the PCJ design to verify the existence of a permissive that allows HLW concentrate transfer from the PT Facility HLP to the MFPV.	

Verif. Method	Verif. By	Plan	Notes/Comments
A	ENG	Perform an analysis to verify the HCP and HFP systems can receive concentrate from the PT facility at a rate of 55 gpm.	

3.5.3.2 Glass Former Reagent System - Glass Formers

Requirement: The HFP system shall interface with the GFR system to receive gravity flow of glass formers into the MFPV. [Section 6.1.3, BOD, ID : DB-ENG-01-001 ID#10314][Sections 2.2, 3.2, 4.1, IHLW Waste Form Compliance Plan for WTP, ID : HLW-PL-RT-07-0001 ID#10202, ID : HLW-PL-RT-07-0001 ID#10230, ID : HLW-PL-RT-07-0001 ID#10278, ID : HLW-PL-RT-07-0001 ID#10279](A.4).

Basis Discussion: Proper proportions of various glass formers will be prepared, mixed, moistened, added to the HLW concentrate, and mixed to prepare HLW feed material.

Verification: Verification is expected to be achieved through the following:

Verif. Method	Verif. By	Plan	Notes/Comments
I	ENG	Review of design to verify the MFPV interfaces with GFR to receive the glass formers.	
I	ENG	Review the PCJ design to verify the existence of a permissive that allows transfer of glass formers from the GFR blend vessel.	

3.5.3.3 Melter Feed Preparation Vessel - Transfer to Melter Feed Vessel

Requirement: The MFPVs shall interface with the MFVs to transfer the mixed and compliant melter feed batch for staging prior to glass production. [Sections 2.2, 3.1, 3.2, IHLW Waste Form Compliance Plan for WTP, ID : HLW-PL-RT-07-0001 ID#10202, ID : HLW-PL-RT-07-0001 ID#10221, ID : HLW-PL-RT-07-0001 ID#10230](A.7, A.8).

Basis Discussion: None.

Verification: Verification is expected to be achieved through the following:

Verif. Method	Verif. By	Plan	Notes/Comments
I	ENG	Review of design to verify the transfer line interfaces between the MFPV and MFV to receive the melter feed.	

3.5.3.4 Melter Feed Vessel - Transfer to Melter

Requirement: The MFVs shall interface with the HLW melters to transfer the mixed melter feed batch for glass production. [Sections 2.2, 3.1, 3.2, IHLW Waste Form Compliance Plan for WTP, ID : HLW-PL-RT-07-0001 ID#10202, ID : HLW-PL-RT-07-0001 ID#10221, ID : HLW-PL-RT-07-0001 ID#10230](A.10).

Basis Discussion: None.

Verification: Verification is expected to be achieved through the following:

Verif. Method	Verif. By	Plan	Notes/Comments
I	ENG	Review of design to verify the transfer line interfaces between the MFV and melter to receive the melter feed.	

3.5.3.5 Plant Wash and Disposal System - Vessel Wash Water

Requirement: The HFP vessels shall interface with the PWD to receive demineralized water, with or without nitric acid, to wash and decontaminate the vessels and internals. [Sections 5.2, 14.1, 20.0, ORD, ID : RPT-OP-01-001 ID#1047, ID : RPT-OP-01-001 ID#1467, ID : RPT-OP-01-001 ID#1717, ID : RPT-OP-01-001 ID#1718, ID : RPT-OP-01-001 ID#1719, ID : RPT-OP-01-001 ID#1720, ID : RPT-OP-01-001 ID#1721](D.1, D.2).

Basis Discussion: None.

[ALARA]

Verification: Verification is expected to be achieved through the following:

Verif. Method	Verif. By	Plan	Notes/Comments
I	ENG	Review of the design to verify the interface between the PWD and NAR systems and HFP vessels to receive demineralized water and nitric acid for washing the vessels.	

3.5.3.6 Vessel Cooling

Requirement: The HFP vessel design shall be capable of being cooled and include any required system interfaces. (K.1, M.1.1).

Basis Discussion: The HFP vessels are cooled to remove heat generated by mixing and radioactive decay to maintain temperatures within the ranges stipulated in requirement 3.5.1.1.3.

Verification: Verification is expected to be achieved through the following:

Verif. Method	Verif. By	Plan	Notes/Comments
A	ENG	Perform an analysis to document the HFP vessels are capable of being cooled and maintain temperature within the ranges stipulated in requirement 3.5.1.1.3.	
I	ENG	Review of design to verify conformance to the analysis results.	

3.5.3.7 Process Vessel Vent Exhaust and HLW Melter Offgas Treatment Process Systems - Vessel Ventilation

3.5.3.7.1 Hydrogen Mitigation

Requirement: The HFP vessels shall interface with the PVV and HOP systems to remove hydrogen from the vessel headspace during normal operations. [Sections 4.3.8.3.1, 4.3.8.3.2, PDSA - HLW Facility, ID : PSAR-

ESH-01-002-04 ID#12342, ID : PSAR-ESH-01-002-04 ID#12343] [Section III.10.E.9.c.xi., Dangerous Waste Portion of RCRA Permit, ID : WA7890008967 WTP ID#356] (J.1).

Basis Discussion: The PVV and HOP systems reduce the potential for explosion by removing hydrogen from the vessel headspace to below the LFL.

[ALARA]

Verification: Verification is expected to be achieved through the following:

Verif. Method	Verif. By	Plan	Notes/Comments
A	ENG	Perform an analysis to document the PVV and HOP systems capability to remove hydrogen from the vessel headspace during normal operations.	
I	ENG	Review of the system design to verify the interface with the PVV and HOP systems to remove hydrogen from the HFP vessel headspace.	Documented in DVR.

3.5.3.8 High Pressure Steam - Steam Ejectors

Requirement: [HOLD] The HFP vessel design shall interface with the high pressure steam system (HPS) system to receive steam for the steam ejectors to transfer the vessel washwater (up to 5% solids) to the RLD system. (H.1).

Basis Discussion: The steam ejectors provide a method to transfer vessel washings to support vessel decontamination and decommissioning (D&D). The steam ejectors are physically separated from the HFP vessels during normal operations to prevent transfer of non-Newtonian waste from entering the RLD system. This requirement is on "**[HOLD]**" due to decision paper 24590-HLW-TB-ENG-13-0001, Engineering Design Decision for RLD, which requires operational restrictions to the transfer path between the HFP vessels and RLD except for vessel decommissioning. [24590-WTP-ATS-MGT-15-0445].

Verification: Verification is expected to be achieved through the following:

Verif. Method	Verif. By	Plan	Notes/Comments
A	ENG	Perform an analysis to verify capability of the steam ejectors to transfer washwater.	
I	ENG	Review of design to verify incorporation of the analysis	
D	SU/COM	Demonstrate the steam ejectors can transfer washwater from the HFP vessels to the RLD (RLD-VSL-00008).	This will be performed during the verification of requirement 3.5.4.1.

3.5.3.9 Autosampling System - Recirculate HFP vessel contents for sampling

Requirement: Each HFP vessel design shall include a recirculation loop to the ASX system for sampling. [Sections 3.1, 4.1, 6.4, IHLW Waste Form Compliance Plan for WTP, ID : HLW-PL-RT-07-0001 ID#10221, ID : HLW-PL-RT-07-0001 ID#10223, ID : HLW-PL-RT-07-0001 ID#10220, ID : HLW-PL-RT-07-0001 ID#10313, ID : HLW-PL-RT-07-0001 ID#10278, ID : HLW-PL-RT-07-0001 ID#10279] [Sections 6.4, *WAI Screening of HLW Glass Chemistry Processing Activities,* ROIN: 40-23473] (A.3, A.6).

Basis Discussion: The recirculation loop provides the capability to extract samples for analysis from the HFP vessels. Samples are collected before and after the addition of glass formers in the MFPV. A glass formulation algorithm will be used to calculate the required glass forming chemicals to be added to the MFPV. There will not

be routine sampling of the MFV but sampling capability will be provided. The melter feed is transferred from the MFV to the melter where it is processed into glass and subsequently poured into canisters. Requirement 3.4.1.1.3, Minimum Sampling Transfer Rate, includes a verification test to verify the sample/transfer pumps are capable of providing a minimum transfer rate to the ASX.

Verification: Verification is expected to be achieved through the following:

Verif. Method	Verif. By	Plan	Notes/Comments
I	ENG	Review the design to verify the sample lines provide the capability to recirculate sample fluid between the ASX and each HFP vessel.	

3.5.3.10 High-Level Waste Melter Feed Process System Vessels Receive Autosampling System Enclosure Drain Lines

Requirement: [**HOLD**] The HFP vessel design shall interface with the ASX drain lines from the ASX enclosures to receive overflowed liquid. (A.3.1, A.6.1).

Basis Discussion: Autosamplers ASX-SMPLR-00029/0042 drain overflowed liquid back to the HFP vessels. This requirement is on "[**HOLD**]" because the hazards analysis and PDSA have not yet been updated to reflect the information in the SDS. Section 4.3.11 of the PDSA - HLW Facility currently states that the ASX drain lines are routed to vessel RLD-VSL-00008. The requirement reference will be updated to include the PDSA section reference after the PDSA is updated to align with the SDS. [24590-WTP-ATS-MGT-14-0403].

Verification: Verification is expected to be achieved through the following:

Verif. Method	Verif. By	Plan	Notes/Comments
I	ENG	Review the vessel design to verify the ASX enclosure drain lines are connected to the HFP vessels.	

3.5.3.11 Plant Wash and Disposal System - Dilute vessel contents

Requirement: [**HOLD**] The HFP vessels shall interface with the PWD to receive demineralized water for washing the vessel internals and diluting the vessel contents prior to any transfer to the RLD (RLD-VSL-00008). (D.1.3, H.1).

Basis Discussion: The HFP vessel contents are diluted with demineralized water and cleaned prior to removal using the steam ejectors for D&D or maintenance and replacement activities. Diluting the waste also enables the steam ejectors to work more efficiently. Per Section 3 of calculation 24590-HLW-M6C-HFP-00002, *HFP-EJCTR-00001, -00002, -00004 and -00005 Steam Ejector Sizing Calculation* the steam ejectors are only capable of lifting a bounding/maximum solids percentage of 5% by weight. This requirement is on "[**HOLD**]" due to decision paper 24590-HLW-TB-ENG-13-0001 which requires operational restrictions to the transfer path between the HFP vessels and RLD except for vessel decommissioning. [24590-WTP-ATS-MGT-15-0445].

[ALARA]

Verification: Verification is expected to be achieved through the following:

Verif. Method	Verif. By	Plan	Notes/Comments
I	ENG	Review of design to verify interface with the PWD to receive DIW.	Documented in DVR.

3.5.3.12 Instrument Service Air Purge to GFR Supply Line

Requirement: The MFPVs shall interface with the safety instrument service air system (ISA) to receive a continuous air purge of the GFR supply line. [Sections 3.3.5.2.3, 4.3.23, 4.4.23, PDSA - HLW Facility, ID : PSAR-ESH-01-002-04 ID#14475, ID : PSAR-ESH-01-002-04 ID#10918, ID : PSAR-ESH-01-002-04 ID#10919, ID : PSAR-ESH-01-002-04 ID#12704, ID : PSAR-ESH-01-002-04 ID#15796, ID : PSAR-ESH-01-002-04 ID#13327, ID : PSAR-ESH-01-002-04 ID#15789, ID : PSAR-ESH-01-002-04 ID#13333, ID : PSAR-ESH-01-002-04 ID#13339](I.4).

Basis Discussion: The GFR supply line is continually purged with a low airflow from the safety ISA to prevent backflow of contamination from the MFPVs to the GFR during normal operation.

[ALARA]

Verification: Verification is expected to be achieved through the following:

Verif. Method	Verif. By	Plan	Notes/Comments
I	ENG	Review of design to verify interface with the MFPV to receive Safety ISA purge to the GFR supply line.	Documented in DVR.

3.5.4 Other Technical, Specialty, Operations and Maintenance Requirements

3.5.4.1 Vessel Washing

Requirement: The HFP vessels shall be designed with internal spray mechanisms to wash the vessel walls and internals. [Sections 11.7.4, 16.4.8, BOD, ID : DB-ENG-01-001 ID#11534, ID : DB-ENG-01-001 ID#12861][Section 14.2, 20.0, ORD, ID : RPT-OP-01-001 ID#1475, ID : RPT-OP-01-001 ID#1730, ID : RPT-OP-01-001 ID#1717, ID : RPT-OP-01-001 ID#1718, ID : RPT-OP-01-001 ID#1719, ID : RPT-OP-01-001 ID#1720, ID : RPT-OP-01-001 ID#1721] (D.2, H.1).

Basis Discussion: The internal spray mechanisms used to wash the HFP vessels help to facilitate the removal of contamination and prevent the buildup of solids on the vessel walls. The vessel washings are processed forward to the melters during normal operations. The HFP vessels are to be cleaned prior to removal for D&D or maintenance/replacement activities. The steam ejectors are only used to transfer vessel washwater to the RLD prior to vessel decommissioning.

[ALARA]

Verification: Verification is expected to be achieved through the following:

Verif. Method	Verif. By	Plan	Notes/Comments
A	ENG	Perform an Analysis to verify the spray mechanisms are capable of washing the vessel walls and internals.	
I	ENG	Review of design to verify incorporation of internal spray mechanisms are designed in accordance with 24590-WTP-GPG-M-013, *Plant Wash System Design.*	

3.5.4.2 Operator Reaction Time

Requirement: The HFP vessels shall provide level limit switches and overflow features to contain contaminated liquid without relying on operator manual action for at least 30 minutes after the onset of a credible failure event. [Section 11.10, ORD, ID : RPT-OP-01-001 ID#1284]

Basis Discussion: In the event that excess liquid accumulates in a vessel from a credible failure event (e.g. pump doesn't turn off or is inoperable, plugged piping, etc.) provisions are provided to properly contain the liquid without operator manual action for at least 30 minutes. The vessels are provided with high level limit switches which are interlocked with pumps and other equipment. If the high level is reached, equipment is operated to control the liquid level in the vessel. If these interlocks or equipment fail, overflow features are provided to route the liquid to sumps.

Verification: Verification is expected to be achieved through:

Verif. Method	Verif. By	Plan	Notes/Comments
I	ENG	Review the HFP design to verify no manual operator action is required to contain contaminated liquid for 30 minutes after a credible failure event.	Document in an evaluation/assessment. Ops to participate in and/or review the evaluation/assessment.

3.5.4.3 Pneumercator Plugging Prevention

Requirement: Purge air liquid level instrumentation (pneumercator) in process vessels shall be designed to prevent plugging. There shall also be a mechanical (clean-out port) capability available for unplugging the pneumercator tubes if a plug occurs and flushing is unsuccessful. [Section 11.16, ORD, ID : RPT-OP-01-001 ID#1373]

Basis Discussion: None

Verification: Verification is expected to be achieved through:

Verif. Method	Verif. By	Plan	Notes/Comments
I	ENG	Review the HFP design to verify attributes exist to prevent plugging; including mechanical clean-out ports.	Design features such as automatic bubbler flushes would satisfy this requirement.

3.6 Piping Requirements

3.6.1 Mission and Functional / Performance Requirements (Including States/Modes)

3.6.1.1 Piping Design

3.6.1.1.1 Codes and Standards

Requirement: The HCP and HFP piping shall be designed, inspected, and tested in accordance with ASME B 31.3-1996, *Process Piping*, and strain criteria as tailored in SRD Appendix C, Section 26. [Appendix C, SRD, ID : SRD-ESH-01-001-02 ID#666][Sections 11.4.1, 11.7.6, 11.7.1, 16.4.1.3, 16.4.2.4, 16.4.2.7, BOD, ID : DB-ENG-01-001 ID#11429, ID : DB-ENG-01-001 ID#13128, ID : DB-ENG-01-001 ID#13129, ID : DB-ENG-01-001 ID#13130, ID : DB-ENG-01-001 ID#11516, ID : DB-ENG-01-001 ID#12777, ID : DB-ENG-01-001 ID#12780, ID : DB-ENG-01-001 ID#12813, ID : DB-ENG-01-001 ID#12830, ID : DB-ENG-01-001 ID#12832][Sections 3.4.1.11, 3.4.1.11.1.5, 4.4.27, 4.3.11.3, 5.6.14, PDSA HLW - Facility, ID : PSAR-ESH-01-

002-04 ID#15347, ID : PSAR-ESH-01-002-04 ID#12413, ID : PSAR-ESH-01-002-04 ID#15913, ID : PSAR-ESH-01-002-04 ID#11841, ID : PSAR-ESH-01-002-04 ID#11842, ID : PSAR-ESH-01-002-04 ID#13919, ID : PSAR-ESH-01-002-04 ID#15346].

Basis Discussion: The pipe, fittings, flanges, and valves are in accordance with the long stock code descriptions listed in applicable pipe class specifications used for the HCP/HFP system. The pipe, fittings, flanges, and valves used are in accordance with the design code listed on the specific pipe class specification. Specific numbered in-line components are provided by other engineering disciplines that are in accordance with the design code requirements listed in the applicable engineering specification for the specific component.

Verification: Verification is expected to be achieved through the following:

Verif. Method	Verif. By	Plan	Notes/Comments
A	ENG	Perform an analysis of the piping design in accordance with ASME B31.3-1996, including Code Case 178, and strain criteria in accordance with the SRD Appendix C.	
I	ENG	Review of design to verify conformance to the analysis results.	Documented in an assessment that may be performed using a sampling basis or documented in DVR.

3.6.1.1.2 Fully Welded Piping

Requirement: All in-cell process piping that is nonmaintainable shall be fully welded. [Sections 11.7.4, 16.4.1.1, BOD, ID : DB-ENG-01-001 ID#11534, ID : DB-ENG-01-001 ID#12747].

Basis Discussion: The in-cell piping in contact with the HLW concentrate provides containment of the process fluid. Traps for contamination should be mitigated by fully welded pipe connections.

[ALARA]

Verification: Verification is expected to be achieved through the following:

Verif. Method	Verif. By	Plan	Notes/Comments
I	ENG	Review the system design to verify adoption of fully welded nonmaintainable piping.	Documented in DVR (although not safety, hard-to-reach piping is included).

3.6.1.1.3 Siphon Prevention

Requirement: The piping design shall provide one barometric head of isolation on service piping lines below the maximum liquid level of the associated vessels/tanks and piping features. The piping design for spargers, sample/transfer pump priming lines, ADS pump lines, cooling jacket lines, steam ejectors, and bubblers shall meet this requirement. [Sections 3.3.5.2.8, 3.3.5.2.11, 3.3.5.6.4, 4.4.7, 4.4.23.3, 5.6.7, 5.6.14, 5.3.2.12, 5.6.34, PDSA - HLW Facility, ID : PSAR-ESH-01-002-04 ID#14481, ID : PSAR-ESH-01-002-04 ID#10934, ID : PSAR-ESH-01-002-04 ID#14484, ID : PSAR-ESH-01-002-04 ID#10940, ID : PSAR-ESH-01-002-04 ID#11002, ID : PSAR-ESH-01-002-04 ID#13339, ID : PSAR-ESH-01-002-04 ID#13919, ID : PSAR-ESH-01-002-04 ID#13018, ID : PSAR-ESH-01-002-04 ID#13905, ID : PSAR-ESH-01-002-04 ID#13635, ID : PSAR-ESH-01-002-04 ID#13955][Section 7.1, ORD, ID : RPT-OP-01-001 ID#1102, ID : RPT-OP-01-001 ID#1100].

Basis Discussion: One barometric head of isolation on service piping lines prevents contamination spread up these utility or process lines (accomplished by 34 ft of vertical pipe or piping to a destination open to air, and the piping/destination is always above the liquid level in the vessel).

[ALARA]

Verification: Verification is expected to be achieved through the following:

Verif. Method	Verif. By	Plan	Notes/Comments
A	ENG	Perform an analysis to verify that one barometric head of isolation is provided below the maximum liquid level for the spargers, sample/transfer pump priming lines, ADS pump lines, cooling jacket lines, steam ejectors, and bubblers.	
I	ENG	Review the design to verify the spargers, sample/transfer pump priming lines, ADS pump lines, cooling jacket lines, and bubblers meet this requirement.	Documented in DVR.

3.6.1.1.4 Double-Walled (Coaxial) Piping

Requirement: The HLW concentrate transfer piping from the PT Facility to the HLW Facility shall be an underground, double-walled (coaxial) pipeline. [Sections 4.4.4.2, 5.6.7, PDSA - HLW Facility, ID : PSAR-ESH-01-002-04 ID#12984, ID : PSAR-ESH-01-002-04 ID#13905][Section 5.6.20, PDSA - PT Facility, ID : WTP-PSAR-ESH-01-002-02 ID#15189][Section 14.10.1.3, BOD, ID : DB-ENG-01-001 ID#12173].

Basis Discussion: To provide a dual containment boundary for transferring the HLW concentrate between the PT Facility and HLW Facility. Radioactive liquid transfer lines are double-encased to minimize the potential for release of contamination due to the breach of a process line. Coaxial lines have the provision to pneumatically test both primary and secondary lines for leakage (Section 14.3, ORD). See Section 3.4.2 for allocation of leak detection requirements. The transfer lines are also buried to reduce worker radiation exposure due to high dose rates.

[ALARA]

Verification: Verification is expected to be achieved through the following:

Verif. Method	Verif. By	Plan	Notes/Comments
I	ENG	Review the design to verify the piping from the PT Facility to the HLW Facility is double-walled.	Documented in DVR.

3.6.1.1.5 Co-Axial Leak Testing

Requirement: The HFP/HCP Co-axial lines shall have the provision to pneumatically test both primary and secondary lines for leakage. Co-axial lines shall also have on-line primary containment leak detection capability. [Section 14.3, ORD, ID : RPT-OP-01-001 ID#1482]

Basis Discussion: The Co-axial piping (pipe within a pipe) contains test ports for the inner and outer pipes such that leakage testing may be performed to verify containment integrity.

Verification: Verification is expected to be achieved through the following:

Verif. Method	Verif. By	Plan	Notes/Comments
I	ENG	Review the design to verify the HFP/HCP Co-axial piping includes provisions to pneumatically test both the primary and secondary lines for leakage and includes on-line leak detection capability.	Documented in DVR.

3.6.1.1.6 Coaxial Piping Support

Requirement: The underground HLW concentrate transfer piping from the PT Facility to the HLW Facility shall be designed such that it is supported and protected from physical damage resulting from backfill settlement, vibration, expansion or vehicular traffic. [Section 14.10.1, BOD, ID : DB-ENG-01-001 ID#12141, ID : DB-ENG-01-001 ID#12142, ID : DB-ENG-01-001 ID#12146]

Basis Discussion: Backfill materials supporting the transfer piping from PT to HLW should not allow stresses on the coaxial piping that could cause physical damage. Procedures described in American Petroleum Institute (API) Recommended Practice 1615, Installation of Underground Petroleum Storage Systems (API 1996a) or ANSI Standard B31.3, *Liquid Petroleum Transportation Piping Systems* (ANSI 1987) may be used as guidance.

Verification: Verification is expected to be achieved through the following:

Verif. Method	Verif. By	Plan	Notes/Comments
I	ENG	Review the design to verify the piping from the PT Facility to the HLW Facility is supported and protected from physical damage.	May be documented in an evaluation or assessment.

3.6.1.2 Pressure Relief Valves

Requirement: Pressure relief valves shall be configured using a full port three-way valve, dual pressure safety valves (PSV), and drain valves on each leg. [Section 14.4, ORD,ID: WTP-RPT-OP-01-001 ID#1490]

Basis Discussion: The HDH pressure relief valves are configured so that there is no service outage while servicing a PSV. Pressure relief valves are located on the HPS inlet to the heat exchangers, hot water outlet of the heat exchanger, hot/cold water return from the decontamination vessels, and at the hot water head vessels.

Verification: Verification is expected to be achieved through:

Verif. Method	Verif. By	Plan	Notes/Comments
I	ENG	Review the piping design to verify pressure relief valves are configured using full port three-way valves, dual PSVs, and a drain valve on each leg.	Document in DVR

3.6.2 Nuclear Safety, ALARA, Environmental, and Other Regulatory Requirements

3.6.2.1 Mechanical Isolation of Utility Supply Lines

Requirement: **[HOLD]**The utility supply lines (i.e., air, steam, glass formers, plant wash, and cooling water) to the HFP vessels shall include provisions to mechanically isolate from all waste transfer lines that can potentially result in contaminating the utility supply lines. The steam supply line to the steam ejectors shall be provided with a blind flange. The glass former feed line shall be provided with an isolation valve that interlocks closed upon indication of potential for loss of confinement. [Sections 3.4.1.7.1.5, 4.3.15, 4.3.15.1, 4.4.23, 4.4.23.1, 4.4.23.2, 5.6.14, 5.6.35, PDSA - HLW Facility, ID : PSAR-ESH-01-002-04 ID#11542, ID : PSAR-ESH-01-002-04 ID#14100, ID : PSAR-ESH-01-002-04 ID#15789, ID : PSAR-ESH-01-002-04 ID#12493, ID : PSAR-ESH-01-002-04 ID#13327, ID : PSAR-ESH-01-002-04 ID#13329, ID : PSAR-ESH-01-002-04 ID#13330, ID : PSAR-ESH-01-002-04 ID#13334, ID : PSAR-ESH-01-002-04 ID#13919, ID : PSAR-ESH-01-002-04

ID#13957][Section 7.1, 14.1, ORD, ID : RPT-OP-01-001 ID#1101, ID : RPT-OP-01-001 ID#1462][Section 5.1.2, BOD, ID : DB-ENG-01-001 ID#10259].

Basis Discussion: This mechanical isolation design feature (e.g., valves, blind flanges, spectacle blinds, or capped lines) ensures there is no connection between utility supply lines to prevent backflow of contamination. The steam ejectors and jumpers are not installed in the vessel during normal operations; therefore, no connection exists between the ejectors and the steam supply. This requirement is on "**[HOLD]**" because of a change to the PDSA which requires a change from a blind flange to a welded, blanked fitting to isolate the steam supply to the ejectors. [24590-WTP-ATS-MGT-15-0446]

[ALARA]

Verification: Verification is expected to be achieved through the following:

Verif. Method	Verif. By	Plan	Notes/Comments
I	ENG	Review the design to verify mechanical isolation capabilities on utility supply lines.	Documented in DVR.

3.6.2.2 High-Level Waste Facility Transfer Line Slope to Pretreatment Facility

Requirement: The coaxial transfer piping from the PT Facility to the HLW Facility design shall be sloped toward the PT Facility. [Section 5.6.7, PDSA - HLW Facility, ID : PSAR-ESH-01-002-04 ID#13905] [Section 14.10.1.3, BOD, ID : DB-ENG-01-001 ID#12173] (A.1).

Basis Discussion: The Slope of the transfer piping towards PT is to promote self-draining. This is an ALARA feature because it allows for residual waste to transfer back to containment without being pumped back reducing the source term in the lines. For additional details on pipe sloping, refer to 24590-WTP-GPG-M-027, *Recommended Slopes for Piping Systems* and slope requirements in 24590-WTP-M6-50-00008, *P&ID Symbols and Legend Sheet 8 of 8.*

[ALARA]

Verification: Verification is expected to be achieved through the following:

Verif. Method	Verif. By	Plan	Notes/Comments
I	ENG	Review the design to verify coaxial piping from PT Facility to HLW Facility is designed to drain back to the PT Facility.	Documented in DVR.

3.6.2.3 Hydrogen Explosions

Requirement: **[HOLD]** The HFP piping/tubing shall maintain integrity during and after multiple internal hydrogen explosions by design and configuration. [Sections 4.4.27, 4.4.27.1, PDSA - HLW Facility, ID : PSAR-ESH-01-002-04 ID#15346, ID : PSAR-ESH-01-002-04 ID#15347, ID : PSAR-ESH-01-002-04 ID#15348, ID : PSAR-ESH-01-002-04 ID#13401][Appendix C.2.3.1, BOD, ID : DB-ENG-01-001 ID#13033].

Basis Discussion: The safety function of the piping/tubing in contact with waste (including safety air tubing as applicable) is to reduce the probability of a failure by providing confinement during and after multiple hydrogen explosions (Section 4.4.27.1, PDSA - HLW Facility). Hydrogen is generated within waste and water/reagents systems in piping and ancillary vessels of the HLW Facility by means of thermolysis and radiolysis. This hydrogen may build up in piping and ancillary vessels and exceed the LFL (refer to Section 4.4.27.2 of PDSA - HLW Facility). Criteria have been established for conditions where detonations in piping and in-line components due to hydrogen accumulation may be allowed. For normal operations the quantity of hydrogen must be less than

that which (if detonated) would result in an explosion that stresses the pipe beyond the through-wall average elastic limit (will not fail in ductile fracture). This means the pipe confinement boundary will survive repeated explosions without repair or replacement (refer to Section 4.4.27.3 of PDSA - HLW Facility). This requirement is on "[**HOLD**]" until Engineering and Nuclear Safety Engineering determine the path forward to resolve this functional requirement. [24590-WTP-ATS-MGT-14-0401].

[ALARA]

Verification: Verification is expected to be achieved through the following:

Verif. Method	Verif. By	Plan	Notes/Comments
A	ENG	Perform an analysis to document the HFP piping/tubing maintains integrity during and after multiple hydrogen explosion	Documented in DVR.
I	ENG	Review of design to verify conformance to the analysis results.	Documented in DVR.

3.6.2.4 Black Cell Seismic Evaluation

Requirement: The HLW-HCP and HFP piping located in black cells (e.g., co-axial transfer piping, concentrate receipt piping, etc.) shall be evaluated using approved seismic category SC-I methods and acceptance criteria as defined in the SRD. [Section 16.4.2.7, BOD, ID : DB-ENG-01-001 ID#12831]

Basis Discussion: The HCP and HFP piping is listed in Table B-1 of the BOD, Appendix B, and is therefore allowed to be designed for the WTP site-specific ground motion. The evaluation of black cell piping to the seismic category SC-1 design basis event (DBE) provides additional protection to seismic category SC-1 SSCs during seismic events.

Verification: Verification is expected to be achieved through the following:

Verif. Method	Verif. By	Plan	Notes/Comments
I	ENG	Review of design to verify HLW-HCP and HFP Piping located in black cells are evaluated using approved SC-I methods and acceptance criteria as defined in the SRD.	

3.6.3 System Interface Requirements

3.6.3.1 PT Facility PWD, ASX, DIW - Pipe Flushing Interfaces

Requirement: [**HOLD**] The piping design shall interface with the following systems to provide flush of demineralized water (up to three line volumes) into the transfer pipe lines at a velocity within the ranges listed below: [Section 6.2.1, BOD, ID : DB-ENG-01-001 ID#10322][Section 14.3, ORD, ID : RPT-OP-01-001 ID#1478, ID : RPT-OP-01-001 ID#1479](A.3.1, A.6.1, B.1, E.1, G.1).

- **HLW concentrate piping between the PT Facility and HLW Facility MFPV**
  - Flush water source: demineralized water system (DIW) via PWD
  - Flush velocity range: 6-12 fps for slurries without glass formers
- **Sample/recirculation piping between each HFP vessel and the ASX**
  - Flush water source: DIW system via ASX
  - Flush velocity range: 6-10 fps for slurries with glass formers (bounding)

- **HLW melter feed piping from MFPV to MFV**
  - Flush water source: DIW system via ASX
  - Flush velocity range: 6-10 fps for slurries with glass formers
- **HLW melter feed piping from MFV to melter**
  - Flush water source: DIW system via ASX
  - Flush velocity range: 6-10 fps for slurries with glass formers
- **HLW process waste transfer line between melter caves 1 and 2**
  - Flush water source: DIW system via ASX
  - Flush velocity range: 6-10 fps for slurries with glass formers (bounding)

Basis Discussion: The transfer lines are flushed to remove waste from the lines to prevent plugging and the accumulation of waste that could generate hydrogen (Sections 1.4, 4.5.1, *Minimum Flow Velocity for Slurry Lines*). The minimum flush velocity of 6 fps was determined in CCN 241253, *Response to Defense Nuclear Facilities Safety Board (DNFSB) Staff Issue Report Regarding Plugging of Process Lines, Pretreatment Facility, Waste Treatment Plant, Hanford Site* based on the test data. This requirement is on "HOLD" because the BOD has not established a design requirement for the minimum flush velocity to be 6 fps. [24590-WTP-ATS-MGT-14-0404].

[ALARA]

Verification: Verification is expected to be achieved through the following:

Verif. Method	Verif. By	Plan	Notes/Comments
A	ENG	Perform an analysis of the transfer and recirculation pipe lines to ensure the required flush velocity can be achieved.	
I	ENG	Review of design to verify conformance to the analysis results.	
T	SU/COM	Perform integrated system test to verify flushing velocity meets the acceptable range for the sample and transfer lines listed in the requirement above. Flushing demineralized water to not exceed three line volumes.	

3.6.4 Other Technical, Specialty, Operations and Maintenance Requirements

3.6.4.1 Flushing, Draining, and Slopes

Requirement: The piping design shall provide the capability to be flushed and drained with no traps or pockets that can accumulate liquids or solids that are not drained. The piping will allow a means to break vacuum to allow gravity liquid draining. [Sections 7.1, 14.3, 20.0, ORD, ID : RPT-OP-01-001 ID#1477, ID : RPT-OP-01-001 ID#1730, ID : RPT-OP-01-001 ID#1103, ID : RPT-OP-01-001 ID#1480, ID : RPT-OP-01-001 ID#1105, ID : RPT-OP-01-001 ID#1725][Sections 11.4.1, 16.4.2.7, BOD, ID : DB-ENG-01-001 ID#12833] (B.1, D.1, E.1, G.1).

Basis Discussion: The piping provisions for draining and/or pumping fluid prevents lines from plugging and minimizes contamination levels during equipment maintenance and/or replacement, in support of as low as reasonably achievable (ALARA) design objectives.

[ALARA]

For additional details on pipe sloping, refer to 24590-WTP-GPG-M-027 and 24590-WTP-M6-50-00008, *P&ID Symbols and Legend Sheet 8 of 8*. Level piping for a short distance through wall penetrations, at connections to equipment, and at jumpers is acceptable (Section 14.3, ORD). In-cell instrument air lines connected using flexible jumpers are not considered process piping and are not required to be sloped (Section 7.1, ORD).

Verification: Verification is expected to be achieved through the following:

Verif. Method	Verif. By	Plan	Notes/Comments
I	ENG	Review the design (i.e., piping and instrumentation diagrams [P&ID]) to verify flushing capabilities and that the piping is designed to break vacuum and gravity drain with no traps or pockets.	May be documented in an assessment/evaluation.
D	SU/COM	Demonstrate flushing and draining capabilities during integrated system testing.	This will be performed during the verification of requirement 3.6.3.1

3.6.4.2 Water Hammer

Requirement: HFP and HCP automatic valve closure rates shall be sufficiently slow to prevent damage from water hammer. [Section 14.4, ORD, ID : RPT-OP-01-001 ID#1489] [Section 11.7.4, BOD, ID : DB-ENG-01-001 ID#11532]

Basis Discussion: The HFP and HCP design considers water hammer in the design of automatic valve closure devices. The devices control the rate of valve closure to prevent damage to the piping systems from water hammer.

Verification: Verification is expected to be achieved through:

Verif. Method	Verif. By	Plan	Notes/Comments
A	ENG	Perform an analysis to verify the performance criteria for slow closing valve actuators is adequate to prevent water hammer during valve closure.	
I	ENG	Review HFP and HCP design to verify slow closing valves have been incorporated into the design where required to prevent water hammer.	

3.6.4.3 Instrument Flush Mounting

Requirement: Instrumentation installed in piping with solids will be flush-mounted. [Section 11.16, ORD, ID : RPT-OP-01-001 ID#1373]

Basis Discussion: Flush mounting prevents solids from plugging and the instrumentation from providing erroneous indications as it does not create an obstruction of flow where solids could accumulate. For example, transducers installed in a short pipe stub would fill with solids.
[ALARA]

Verification: Verification is expected to be achieved through:

Verif. Method	Verif. By	Plan	Notes/Comments
I	ENG	Review design to verify instrumentation installed in HCP/HFP process piping are flush mounted.	

3.7 Mechanical Agitator Requirements

3.7.1 Mission and Functional / Performance Requirements (Including States/Modes)

3.7.1.1 Mechanical Agitator Design

Requirement: The mechanical agitator impellers shall be designed in accordance with Part B of 24590-HLW-WIQP-MS-09-0002, *WAI Item Qualification Plan for HLW Melter Feed Preparation Vessel Agitators.* [Section 14.14, ORD, ID : RPT-OP-01-001 ID#1545] [Part B, WAI Item Qualification Plan for HLW Melter Feed Preparation Vessel Agitators, ROIN: 45-34504A] [Section 6.3.1, WAI Screening of HLW Glass Chemistry Processing Activities, ROIN: 40-23466, ROIN: 40-23467](A.2, A.5, A.9).

Basis Discussion: Testing confirmed the required design is capable of adequate mixing in support of sampling data quality objectives. Other design configurations have not been tested and are therefore not allowed.

Verification: Verification is expected to be achieved through the following:

Verif. Method	Verif. By	Plan	Notes/Comments
I	ENG	Review of the mechanical agitator design to verify conformance to the 24590-HLW-WIQP-MS-09-0002, *WAI Item Qualification Plan for MFPV Mechanical Agitators.*	Document in the completed 24590-HLW-WIQP-MS-09-0002, *WAI Item Qualification Plan for MFPV Mechanical Agitators*

3.7.1.2 Vessel Mixing

3.7.1.2.1 Normal Mixing

Requirement: The mechanical agitator design shall be capable of mixing the HFP vessel contents (HLW concentrate with glass formers) during normal operations in order to obtain a representative sample. [Section 14.14, ORD, ID : RPT-OP-01-001 ID#1545][Section 6.3.1, 6.8.1, *WAI Screening of HLW Glass Chemistry Processing Activities*, ROIN: 40-23466, ROIN: 40-23467, ROIN: 40-23492] (A.2, A.5, A.9).

Basis Discussion: Agitation of the wastes helps prevent the build-up of settled solids. Agitation of the HFP vessels is also required to collect a representative sample of vessel contents to ensure the final product will meet waste acceptance product specifications requirements. All volumes of material are continually mechanically mixed to prevent settling of solids. 24590-101-TSA-W000-0004-172-00001, Technical Basis for HLW Vitrification Stream, clarifies the agitator should be capable of mixing concentrate with glass formers with a yield stress of ≥30 Pa and a viscosity of ≥40 cP.

Verification: Verification is expected to be achieved through the following:

Verif. Method	Verif. By	Plan	Notes/Comments
T	ENG (R&T)	Demonstrate the mechanical agitator operation using simulant with a yield stress and viscosity representative	Research and Technology (R&T) testing performed by the Vitreous State

Verif. Method	Verif. By	Plan	Notes/Comments
		of HLW concentrate and glass formers.	Laboratory can be found in Section 4.4.2 and Table 3.5 - High Bound, 24590-101-TSA-W000-0009-195-00003, *Pretreated Waste and Melter Feed Composition Variability Testing using HLW Simulants*

3.7.1.2.2 Start-up Torque

Requirement: The mechanical agitator startup torque shall be capable of overcoming a bounding design settled solids shear strength composed of HLW concentrate and glass formers. (A.2, A.5, A.9).

Basis Discussion: 24590-101-TSA-W000-0004-172-00001, Technical Basis for HLW Vitrification Stream, states the agitator should be capable of overcoming a settled solids shear strength of 625 Pa. The bounding shear strength value of 625 Pa was established based on a plant-upset condition where restart is attempted with a mechanical agitator immersed in a layer of settled solids.

Verification: Verification is expected to be achieved through the following:

Verif. Method	Verif. By	Plan	Notes/Comments
T	ENG (R&T)	Demonstrate the mechanical agitator is capable of overcoming the settled solids shear strength of a simulant with maximum settled solids shear strength of $\geq$ 625 Pa with other rheology parameters identified on the mechanical agitator datasheets.	R&T testing performed by the Vitreous State Laboratory can be found in Section 4.4.7, Table 4.27, Figure 4.100, 24590-101-TSA-W000-0009-195-00003, *Pretreated Waste and Melter Feed Composition Variability Testing using HLW Simulants*

3.7.2 Nuclear Safety, ALARA, Environmental, and Other Regulatory Requirements

3.7.2.1 Design Basis Event - Impeller Impact

Requirement: [**HOLD**] The mechanical agitator shall be designed to not have sufficient rotational energy and mass to breach the HFP vessel walls. [Sections 4.4.16.2.1, 4.4.16.2.3, 5.6.2, PDSA - HLW Facility, ID : PSAR-ESH-01-002-04 ID#13154, ID : PSAR-ESH-01-002-04 ID#13157, ID : PSAR-ESH-01-002-04 ID#13888].

Basis Discussion: As a result of a hazard evaluation, the failure of the MFPV or MFV walls because of the impact of a mechanical agitator impeller was deemed not credible because the maximum impact energy from the mechanical agitator impeller with the MFPV or MFV does not impart sufficient energy to breach the vessel walls (Section 3.3.3.2, PDSA - HLW Facility). This requirement is on "[**HOLD**]" because the PDSA implies the stated requirement is not needed due to the completed hazard evaluation. [24590-WTP-ATS-MGT-14-0409].

Verification: Verification is expected to be achieved through the following:

Verif. Method	Verif. By	Plan	Notes/Comments
A	ENG	Perform an analysis documenting the impact of the mechanical agitator impeller against the HFP vessel walls will not result in a loss of containment/confinement.	Documented in DVR.
I	ENG	Review design to verify the mechanical agitator configuration and HFP vessel wall thickness design	Documented in DVR.

Verif. Method	Verif. By	Plan	Notes/Comments
		conforms to the analysis results.	

3.7.3 System Interface Requirements

None.

3.7.4 Other Technical, Specialty, Operations and Maintenance Requirements

None.

3.8 Air Sparger Requirements

3.8.1 Mission and Functional / Performance Requirements (Including States/Modes)

None.

3.8.2 Nuclear Safety, ALARA, Environmental, and Other Regulatory Requirements

3.8.2.1 Vessel Hydrogen Release

Requirement: [**HOLD**] The HFP vessels shall be capable of mixing the waste to release hydrogen and maintain vessel headspace hydrogen concentration level below the LFL. [Sections 4.3.8, 4.3.8.2, PDSA - HLW Facility, ID : PSAR-ESH-01-002-04 ID#15754, PSAR-ESH-01-002-04 ID#15755, ID : PSAR-ESH-01-002-04 ID#12332](I.1, I.2).

Basis Discussion: This requirement is on "[**HOLD**]" due to the differences between the SDS and the PDSA - HLW Facility and the resolution is expected to eliminate sparging. [24590-WTP-ATS-MGT-14-0410].

Verification: Verification is expected to be achieved through the following:

Verif. Method	Verif. By	Plan	Notes/Comments
A	ENG	Perform an analysis to verify the design is capable of mixing the waste to release hydrogen and maintain vessel contents below the LFL.	
I	ENG	Review of design to verify conformance to the analysis	Documented in DVR.

3.8.2.2 Sparger Wide-Mouth End

Requirement: [**HOLD**] The HFP vessel sparger design shall have a wide-mouth end. [Sections 4.3.8.2, 4.3.8.4, 5.6.5, PDSA - HLW Facility, ID : PSAR-ESH-01-002-04 ID#12353, ID : PSAR-ESH-01-002-04 ID#12354, ID : PSAR-ESH-01-002-04 ID#12355, ID : PSAR-ESH-01-002-04 ID#12374, ID : PSAR-ESH-01-002-04 ID#12375, ID : PSAR-ESH-01-002-04 ID#12334, ID : PSAR-ESH-01-002-04 ID#13899].

Basis Discussion: The spargers are designed with a wide-mouth end to reduce the likelihood of plugging. This requirement is on "[**HOLD**]" due to the differences between the SDS and the PDSA - HLW Facility; the resolution is expected to eliminate sparging. [24590-WTP-ATS-MGT-14-0410].

Verification: Verification is expected to be achieved through the following:

Verif. Method	Verif. By	Plan	Notes/Comments
I	ENG	Review of design to verify the spargers have a wide-mouth end.	Documented in DVR.

3.8.3 System Interface Requirements

3.8.3.1 Instrument Service Air System- Normal Air Purge (Hydrogen Mitigation and Prevent Plugging)

Requirement: [**HOLD**] The HFP vessel spargers shall interface with the ISA system to provide a continuous idle air purge of at least 200 times the maximum calculated hydrogen generation rate (HGR) through the spargers. [Sections 3.3.5.2.3, 4.3.8.4, PDSA - HLW Facility, ID : PSAR-ESH-01-002-04 ID#14475, ID : PSAR-ESH-01-002-04 ID#10918, ID : PSAR-ESH-01-002-04 ID#10919, ID : PSAR-ESH-01-002-04 ID#12374, ID : PSAR-ESH-01-002-04 ID#12375] [Section 6.1, BOD, ID : DB-ENG-01-001 ID#10291](I.1, M.1.1).

Basis Discussion: NFPA 69-2002, Section 8.3.1, "Standard on Explosion Prevention Systems," states, "The combustible concentration shall be maintained at or below 25 percent of the LFL." A dilution rate of 200 times the HGR equates to approximately 0.5 vol % of hydrogen (where 1 vol % is a hydrogen concentration of approximately 25 % of the LFL). This requirement is on "[**HOLD**]" due to differences between the SDS and the PDSA - HLW Facility and the resolution is expected to eliminate sparging. [24590-WTP-ATS-MGT-14-0410].

The normal air purge, through the spargers, provides a volumetric flow rate of at least 200 times the maximum calculated hydrogen generation rate (HGR), which maintains the maximum hydrogen concentration less than 0.5 % of the minimum headspace volume during normal operation. Calculation 24590-WTP-M4C-V11T-00011, *Revised Calculation of Hydrogen Generation Rates and Times to Lower Flammability Limit for WTP*, provides the HGR and time to LFL for the HFP vessels.

Verification: Verification is expected to be achieved through the following:

Verif. Method	Verif. By	Plan	Notes/Comments
A	ENG	Perform an analysis to verify the ISA provides air purge supply to the spargers of at least 200 times the maximum HGR.	Documented in DVR.
I	ENG	Review of design to verify the ISA will provide an idle air purge of at least 200 times the maximum HGR.	Documented in DVR
T	SU/COM	Perform integrated system test to verify the ISA provides air purge supply to the spargers of at least 200 times the maximum HGR.	Documented in DVR.

3.8.3.2 Instrument Service Air System - Design Basis Event (Air Sparging)

Requirement: [**HOLD**] The HFP vessel sparger design shall interface with the ISA system to provide emergency sparge mode (air sparging) at a minimum of 42 standard cubic feet per minute (scfm) for each sparger tube, which is supplied upon mechanical agitator failure or following a seismic DBE (or other loss of mechanical agitaton). [Sections 4.3.8, PDSA - HLW Facility, ID : PSAR-ESH-01-002-04 ID#12353, ID : PSAR-ESH-01-002-04 ID#12354, ID : PSAR-ESH-01-002-04 ID#12355](I.2, M.2.5).

Basis Discussion: Air sparging provides the capability to mix the vessel contents during and after a seismic DBE or other circumstance where the mechanical agitator is unavailable. Air sparging reduces the potential for a hydrogen explosion. This requirement is on "HOLD" due to differences between the SDS and the PDSA - HLW Facility and the resolution is expected to eliminate sparging. [24590-WTP-ATS-MGT-14-0410].

Verification: Verification is expected to be achieved through the following:

Verif. Method	Verif. By	Plan	Notes/Comments
A	ENG	Perform an analysis to verify a minimum of 42 scfm for each sparge tube is supplied upon mechanical agitator failure or a seismic DBE.	
T	SU/COM	Perform integrated system test to verify ISA system provides emergency air sparging supply to the spargers at the minimum design flow rate 42 scfm/sparger tube.	Documented in DVR.

3.8.4 Other Technical, Specialty, Operations and Maintenance Requirements

3.8.4.1 Sparger Flushing and Draining

Requirement: [**HOLD**] The HFP vessel spargers design shall be flushable and fully drainable. [Sections 4.3.8.2, 5.6.5, PDSA - HLW Facility, ID : PSAR-ESH-01-002-04 ID#12334, ID : PSAR-ESH-01-002-04 ID#13899][Section 11.4.1, BOD, DB-ENG-01-001 ID#11431](D.1, D.1.2).

Basis Discussion: The DIW system provides flush water to the sparger lines into the HFP vessels to prevent plugging of the sparger lines. Each tube is equipped with a fitting to allow insertion of a mechanical cleaning device to facilitate unplugging, if needed. The flush water also provides the capability to dilute and overflow the vessel contents onto the melter cave floor during a seismic DBE, if needed, to reduce the potential for a hydrogen explosion. This dilutes and spreads out the vessel contents in such a way that hydrogen gas is not retained in the waste. This requirement is on "**[HOLD]**" due to differences between the SDS and the PDSA - HLW Facility; the resolution is expected to eliminate sparging. [24590-WTP-ATS-MGT-14-0410].

[ALARA]

Verification: Verification is expected to be achieved through the following:

Verif. Method	Verif. By	Plan	Notes/Comments
I	ENG	Review of the system design to verify capability to flush and drain the spargers.	Documented in DVR.

3.9 Pump Requirements

3.9.1 Mission and Functional / Performance Requirements (Including States/Modes)

Refer to Sections 3.4.1.1.1 and 3.4.1.1.2.

3.9.1.1 Sample/Transfer Pumps

3.9.1.1.1 Backflushing Pumps

Requirement: The sample/transfer pumps shall have the capability to be backflushed. [Sections 14.3, 20.0, ORD, ID : RPT-OP-01-001 ID#1477, ID : RPT-OP-01-001 ID#1480, ID : RPT-OP-01-001

ID#1730][Sections 6.2.1, 6.3.3, 11.3.2, 11.4.2, BOD, ID : DB-ENG-01-001 ID#10322, ID : DB-ENG-01-001 ID#10359, ID : DB-ENG-01-001 ID#11392, ID : DB-ENG-01-001 ID#11434].

Basis Discussion: Backflushing the sample/transfer pumps will help to remove waste and prevent plugging (refer to Section 4.1.4 of 24590-HLW-TB-ENG-13-0002, *Engineering Design Decision for HLW HFP* and Section 4.10.5 of 24590-HLW-ES-ENG-13-003, *Risk Reduction Study for the High Level Waste (HLW) Facility: Failure Modes, Effects, and Criticality Analysis (FMECA), In-Service Inspection (ISI), and Plugging*).

[ALARA]

Verification: Verification is expected to be achieved through the following:

Verif. Method	Verif. By	Plan	Notes/Comments
I	ENG	Review of the design to verify sample/transfer pumps with the capability of being backflushed.	

3.9.1.2 Melter Feed (Air Displacement Slurry) Pumps

Requirement: The MFVs shall use ADS pumps for transferring melter feed to the melters. [Sections 11.7.4, 15.3.3, BOD, ID : DB-ENG-01-001 ID#11530, ID : DB-ENG-01-001 ID#12700](A.10).

Basis Discussion: The ADS pumps provide a pulsed transfer rate of HLW supply for glass production. The ADS pumps use air as the motive force to push slurry into the melter. The melter feed is transferred from the MFVs to the HLW melter feed nozzles by dedicated ADS pumps and feed lines to support melter design capacity.

[ALARA]

Verification: Verification is expected to be achieved through the following:

Verif. Method	Verif. By	Plan	Notes/Comments
I	ENG	Review of the design to verify incorporation of ADS pumps from the MFVs to the melters.	Documented in DVR.

3.9.1.2.1 Codes and Standards

Requirement: The ADS pumps shall be designed to ASME *BPVC*, Sections VIII Divisions 1 and 2. [Section 4.4.27, PDSA - HLW Facility, ID : PSAR-ESH-01-002-04 ID#13424].

Basis Discussion: These codes and standards provide the requirements for its design and construction to meet the performance criteria.

Verification: Verification is expected to be achieved through the following:

Verif. Method	Verif. By	Plan	Notes/Comments
A	ENG	Perform an analysis of the ADS pump design in accordance with ASME BPVC Section VIII, Divisions 1 and 2.	Documented in DVR.
I	ENG	Review of design to verify conformance to the results of the analysis.	Documented in DVR.

3.9.2 Nuclear Safety, ALARA, Environmental, and Other Regulatory Requirements

3.9.2.1 Sample/Transfer Pumps

None.

3.9.2.2 Melter Feed (Air Displacement Slurry) Pumps

3.9.2.2.1 Nuclear Safety Design

Requirement: The ADS pumps shall be designed to meet ASTM A312, *Standard Specification for Seamless, Welded, and Heavily Cold Worked Austenitic Stainless Steel Pipes*, for the casing, ASTM A240, *Standard Specification for Chromium and Chromium-Nickel Stainless Steel Plate, Sheet, and Strip for Pressure Vessels and for General Applications* for the internal baffle plate, and NFPA 69 as tailored in the SRD. The ADS pumps shall be designed with a minimum of schedule 80S equivalent housing and a 5/8 in. internal baffle plate. [Appendix C, SRD, ID : SRD-ESH-01-001-02 ID#799][Sections 4.4.27.1, 4.4.27.3, 4.4.27.4, 5.6.34, PDSA - HLW Facility, ID : PSAR-ESH-01-002-04 ID#13402, ID : PSAR-ESH-01-002-04 ID#13411, ID : PSAR-ESH-01-002-04 ID#13424, ID : PSAR-ESH-01-002-04 ID#13955].

Basis Discussion: The safety function of the ADS pumps is to reduce the probability of a release by providing confinement during a hydrogen explosion. Design per the indicated standards provides for a robust design.

Verification: Verification is expected to be achieved through the following:

Verif. Method	Verif. By	Plan	Notes/Comments
I	ENG	Review of the ADS pump design to verify the use of a minimum schedule 80S equivalent housing, a 5/8 in. internal baffle plate, and design per indicated standards.	Documented in DVR.

3.9.3 System Interface Requirements

3.9.3.1 Sample/Transfer Pumps

3.9.3.1.1 Demineralized Water - Pump Priming

Requirement: The sample/transfer pumps shall interface with the PWD system to receive water for priming. (D.1.1).

Basis Discussion: The MFPV sample/transfer pumps use demineralized water for priming to clear the pump and to initiate pumping without waste transfer until pump reaches operating capacity.

Verification: Verification is expected to be achieved through the following:

Verif. Method	Verif. By	Plan	Notes/Comments
I	ENG	Review of design to verify the sample/transfer pumps interface with PWD to receive water for priming.	
D	SU/COM	Perform an integrated system demonstration to verify the demineralized water supply successfully primes the sample/transfer pumps.	

3.9.3.2 Melter Feed (Air Displacement Slurry) Pumps

3.9.3.2.1 Instrument Service Air - Air Supply

Requirement: The ADS pumps shall interface with the ISA system to receive air supply to provide the motive force for operating the ADS pumps. (A.10, I.3)

Basis Discussion: The ADS pump motive force is compressed air, which acts to push the slurry using a pulsed flow.

Verification: Verification is expected to be achieved through the following:

Verif. Method	Verif. By	Plan	Notes/Comments
I	ENG	Review of design to verify ISA system will provide motive force for operating ADS pumps.	
T	SU/COM	This test will be performed in requirement 3.4.1.1.2 since the ADS pumps receive air supply from the ISA that allows the ADS pumps to achieve the minimum transfer rate.	This will be performed during the verification of requirement 3.4.1.1.2

3.9.4 Other Technical, Specialty, Operations and Maintenance Requirements

None.

3.10 Monitoring and Controls Requirements

3.10.1 Mission and Functional / Performance Requirements (Including States/Modes)

3.10.1.1 Vessels

3.10.1.1.1 Temperature

Requirement: The HFP vessels shall include temperature-sensing capability and interface with the process control system (PCJ) to remotely monitor temperature of the waste within the normal operating range of vessel levels. (M.1.1).

Basis Discussion: Temperature monitoring provides the capability to ensure processing conditions are maintained between the minimum and maximum operating temperature values.

Verification: Verification is expected to be achieved through the following:

Verif. Method	Verif. By	Plan	Notes/Comments
I	ENG	Review of design to verify the capability to remotely monitor the vessel temperature.	
D	SU/COM	Demonstrate the capability to verify remote monitoring of the HFP vessel temperature in the facility control room.	

3.10.1.1.2 Pressure

Requirement: The HFP vessels shall include pressure-sensing capability and interface with the PCJ system to remotely monitor pressure within the vessels. (M.1.1).

Basis Discussion: Pressure is monitored to provide processing feedback of the HLW melter feed conditions inside the HFP vessels. The system senses operating conditions and reports data to the PCJ.

Verification: Verification is expected to be achieved through the following:

Verif. Method	Verif. By	Plan	Notes/Comments
I	ENG	Review of design to verify the capability to remotely monitor the vessel pressure.	
D	SU/COM	Demonstrate the capability to verify remotely monitoring of the HFP vessel pressure in the facility control room.	

3.10.1.1.3 Level Detection

Requirement: The HFP vessels shall include level sensing monitoring with remote indication. The programmable protection system (PPJ) shall provide the level detection capabilities for safety control. [Sections 4.4.4, 4.4.4.1, 4.4.4.3, PDSA - HLW Facility, ID : PSAR-ESH-01-002-04 ID#12976, ID : PSAR-ESH-01-002-04 ID#15853, ID : PSAR-ESH-01-002-04 ID#12978, ID : PSAR-ESH-01-002-04 ID#14001] [Sections 6.7.1, 6.7.2, *WAI Screening of HLW Glass Chemistry Processing Activities*, ROIN: 40-23487, ROIN: 40-23488] [Section 14.10.1.1, BOD, ID : DB-ENG-01-001 ID#12149, ID : DB-ENG-01-001 ID#12151] [Section 14.4, ORD, ID : RPT-OP-01-001 ID#1110](M.1.1, M.2.9).

Basis Discussion: Level is monitored to ensure the batch transfer is successfully completed to the desired vessel level and does not exceed the maximum operating batch volume. Level Detection is achieved with radar and bubbler type instrumentation. HFP Vessel level instruments (HFP-VSL-00001/00005/00002/00006) are Dangerous Waste Permit instruments as defined in Appendix 10.13 of the DWP. The batch level is also used by the glass formulation algorithm to determine the feed batch volume transferred to the MFV. The SS interlock is discussed in Section 3.10.2.1.

Verification: Verification is expected to be achieved through the following:

Verif. Method	Verif. By	Plan	Notes/Comments
I	ENG	Review of the design to verify the capability to remotely measurement the HFP vessel content level.	

3.10.1.1.4 Level Accuracy

Requirement: The MFPV radar level instrument shall have an overall accuracy of ±2 % of full-scale, within the normal level operating range of the vessel, in accordance with the WAI requirement. The PPJ system shall provide the level detection capabilities for safety control. [Sections 6.7.2, *WAI Screening of HLW Glass Chemistry Processing Activities*, ROIN: 40-23487, ROIN: 40-23488](M.1.1, M.2.9).

Basis Discussion: The batch level is also used by the glass formulation algorithm to determine the feed batch volume that is transferred to the MFV. Because level instruments 24590-HLW-JL-HFP-LT-0051 and 24590-HLW-JL-HFP-LT-2051 provide information used to confirm the product meets the requirements of 24590-HLW-PL-RT-07-0001, *IHLW Waste Form Compliance Plan for the Hanford Tank Waste Treatment and Immobilization Plant*, they are given a WAI Performance SSC characteristic. The key WAI attribute for the level measurement

instrument is an accuracy of ±2 % (refer to Section 6.7.2 of 24590-HLW-WSF-ENG-07-005, *WAI Screening of HLW Glass Chemistry Processing Activities*). In addition, the related SS interlock is discussed in Section 3.10.2.2.1.

Verification: Verification is expected to be achieved through the following:

Verif. Method	Verif. By	Plan	Notes/Comments
I	ENG	Review design documents to verify overall ±2 % of full-scale instrument accuracy for the MFPV radar level instrument system.	
T	SU/COM	Perform integrated system test to verify the radar level instrument system has an overall accuracy of ±2 % of full-scale for the normal level operating range of the vessel.	

3.10.1.2 Mechanical Agitators

3.10.1.2.1 Dual Speed Sensors

Requirement: The design shall include a calibrated speed sensor to measure rotation speed of the mechanical agitator shaft for WAI and a speed sensor for safety. [Section 6.3.1, *WAI Screening of HLW Glass Chemistry Processing Activities*, ROIN: 40-23466, ROIN: 40-23467, ROIN: 43-2029][Sections 4.3.8, 4.3.8.2, PDSA - HLW Facility, ID : PSAR-ESH-01-002-04 ID#15754, ID : PSAR-ESH-01-002-04 ID#12333](M.2.6).

Basis Discussion: The mechanical agitator speed sensors provide both WAI monitoring of the agitator rotational speed to ensure waste is being sufficiently mixed, and a safety function to detect a failure (which would necessitate a shift to emergency sparging).

Verification: Verification is expected to be achieved through the following:

Verif. Method	Verif. By	Plan	Notes/Comments
I	ENG	Review of the system design to verify the mechanical agitator speed sensors are provided.	Documented in DVR.

3.10.1.2.2 Dual Motor Power Sensors

Requirement: The design shall include dual sensors to measure mechanical agitator motor power; one sensor shall be for safety. [Sections 4.3.8, 4.3.8.2, PDSA - HLW Facility, ID : PSAR-ESH-01-002-04 ID#15754, ID : PSAR-ESH-01-002-04 ID#12333](M.2.7).

Basis Discussion: The mechanical agitator power sensors provide safety monitoring of the agitator motor amperage to detect a failure. The power and speed sensors provide diverse monitoring of the mechanical agitator.

Verification: Verification is expected to be achieved through the following:

Verif. Method	Verif. By	Plan	Notes/Comments
I	ENG	Review of the system design to verify mechanical agitator power sensors are provided.	Documented in DVR.

3.10.1.2.3 Agitator Failure Detection

Requirement: Mechanical agitator motors speed and power status signals shall interface with the PPJ system for remote monitoring. [Sections 3.4.1.7.2.5, 4.3.8, 5.5.4.1, PDSA - HLW Facility, ID : PSAR-ESH-01-002-04 ID#14103, ID : PSAR-ESH-01-002-04 ID#15754, ID : PSAR-ESH-01-002-04 ID#13697](M.2.4, M.2.5, M.2.6).

Basis Discussion: The safety basis requires this to be an automated function controlled by the PPJ system.

Verification: Verification is expected to be achieved through the following:

Verif. Method	Verif. By	Plan	Notes/Comments
I	ENG	Review the design to verify interface between the mechanical agitator speed and power sensor signals and the PPJ.	Documented in DVR.
D	SU/COM	Demonstrate the capability to remotely monitor agitator speed and power in the facility control room.	

3.10.1.3 Spargers

3.10.1.3.1 Flow Rate

Requirement: [**HOLD**] The HFP vessel sparger design shall include the capability to monitor the airflow rate supply to the spargers and interface with the PCJ system to remotely monitor the sparger flow rate. [Sections 4.3.8, 4.3.8.2, 5.5.4.2, PDSA - HLW Facility, ID : PSAR-ESH-01-002-04 ID#12336, ID : PSAR-ESH-01-002-04 ID#12339, ID : PSAR-ESH-01-002-04 ID#15754, ID : PSAR-ESH-01-002-04 ID#13703](M.1.1).

Basis Discussion: The flow sensors ensure HFP vessels spargers are operational and ensure the HLW Facility hydrogen mitigation system is functional. This requirement is on "[**HOLD**]" due to differences between the SDS and the PDSA - HLW Facility and the resolution is expected to eliminate sparging. [24590-WTP-ATS-MGT-14-0410].

Verification: Verification is expected to be achieved through the following:

Verif. Method	Verif. By	Plan	Notes/Comments
I	ENG	Review of the design to verify the capability exists to monitor flow through each sparger from the PCJ system.	Documented in DVR.
D	SU/COM	Demonstrate the capability to monitor the sparger airflow rates using the PCJ.	This will be performed during the verification of requirements 3.8.3.1 and 3.8.3.2.

3.10.1.3.2 Intermittent Emergency Sparge Mode

Requirement: [**HOLD**] The sparger valves shall interface with the PPJ system to receive a signal to initiate emergency sparge mode (air sparger) and to provide intermittent airflow to the spargers when the mechanical agitator is unavailable, after a seismic DBE, or due to agitator failure. Intermittent emergency sparging, of the HFP vessels, shall be performed sequentially such that no more than one vessel is being sparged at the same time and that the required airflow in each vessel is achieved. [Sections 4.3.8.2, 4.3.8.3.1, PDSA - HLW Facility, ID : PSAR-ESH-01-002-04 ID#12333, ID : PSAR-ESH-01-002-04 ID#12331, ID : PSAR-ESH-01-002-04 ID#12342](M.2.4, M.2.5).

Basis Discussion: The emergency sparge mode intervals are based on the waste characteristics and the time to LFL for the bounding HGR, as determined in 24590-WTP-M4C-V11T-00011, *Revised Calculation of Hydrogen Generation Rates and Times to Lower Flammability Limit for WTP*. Normal idle sparge mode still continues during the quiescent emergency sparge mode (air sparging) intervals. This requirement is on "HOLD" due to differences between the SDS and the PDSA - HLW Facility; the resolution is expected to eliminate sparging. [24590-WTP-ATS-MGT-14-0410].

Verification: Verification is expected to be achieved through the following:

Verif. Method	Verif. By	Plan	Notes/Comments
I	ENG	Review of the control system design to verify capability to provide intermittent air supply to the HFP vessels spargers.	Documented in DVR.
D	SU/COM	Demonstrate the capability to initiate emergency sparge air flow when the PPJ receives a signal following a seismic event or loss of agitator.	

3.10.1.3.3 Safety Air Control Valves

Requirement: [**HOLD**] The system design shall include ISA safety air control valves that control the HFP vessel spargers air supply and provide Safety purge ISA on a loss of the normal non-Safety purge ISA. [Sections 4.3.8, 4.3.8.3.1, 4.3.8.2, PDSA - HLW Facility, ID : PSAR-ESH-01-002-04 ID#15755, ID : PSAR-ESH-01-002-04 ID#12342, ID : PSAR-ESH-01-002-04 ID#12343](M.2.5, M.2.8).

Basis Discussion: ISA safety control valves ensure HFP vessels spargers are supplied with air from either the non-Safety ISA or Safety ISA systems. The safety air control valves are designed to maintain operations post seismic DBE by switching from the non-Safety ISA system to the Safety ISA system. Check valves separate the HLW ISA normal air supply from the safety air supply. The check valves close if pressure is lost in the HLW ISA, preventing safety air from flowing out of a potentially failed ISA supply system. This ensures that safety air flows to the sparge tubes and does not backflow through unpressurized HLW ISA piping. This requirement is on "HOLD" due to differences between the SDS and the PDSA - HLW Facility and the resolution is expected to eliminate sparging. [24590-WTP-ATS-MGT-14-0410].

Verification: Verification is expected to be achieved through the following:

Verif. Method	Verif. By	Plan	Notes/Comments
A	ENG	Perform an analysis to determine the setpoint required to transition from the non-safety to safety purge ISA.	
I	ENG	Review design for ISA safety air control valves and verify the capability to change valve position by the PPJ when flow rate drops below the setpoint.	Documented in DVR.

Verif. Method	Verif. By	Plan	Notes/Comments
A	ENG	Perform an analysis to determine the setpoint required to transition from the non-safety to safety purge ISA.	
T	SU/COM	Perform a test to verify the ISA safety air control valves switch from non-safety purge ISA to safety ISA supply to the spargers when the flow rate drops below the setpoint.	This will be performed during the verification of requirement 3.10.2.1.3

3.10.1.4 Pumps

3.10.1.4.1 Flow Rate to Autosampling System

Requirement: The MFPV sample line to the ASX shall include a calibrated flow meter to measure the sample stream flow rate. [Section 6.4.1, *WAI Screening of HLW Glass Chemistry Processing Activities*, ROIN: 40-23473] (M.1.1).

Basis Discussion: The ASX is required to collect a representative melter feed slurry sample from each batch in the HFP MFPVs. If the collected samples are not representative, it could result in a false indication that the batch is qualified and be transferred into the MFVs for injection into the melter. 24590-WTP-J0-50-00012, *Controls & Instrumentation In-line Flow Devices Straight Run Requirements* and CCN 199857, *Modulating Control Valve Straight Run Guidelines* provides the guidelines for straight run requirements to ensure accurate flow measurement.

Verification: Verification is expected to be achieved through the following:

Verif. Method	Verif. By	Plan	Notes/Comments
I	ENG	Review sample line and pump design to verify that flow profile at flow meter meets meter requirements for accurate flow measurement per 24590-WTP-J0-50-00012, *Controls & Instrumentation In-line Flow Devices Straight Run Requirements* and CCN 199857, *Modulating Control Valve Straight Run Guidelines*	

3.10.1.4.2 Terminate Transfer to Autosampling System

Requirement: The HFP vessel sample/transfer pumps (HFP-PMP-00005A/0000B/00018A/00018B-00007/00017) shall stop when an interlock signal from the PPJ system is received when liquid level is detected above the high level setpoints in the autosampler enclosure containment boundary. [Sections 3.3.5.1.10, 4.3.11.2, 4.3.11.3, 5.5.10, PDSA - HLW Facility, ID : PSAR-ESH-01-002-04 ID#14326, ID : PSAR-ESH-01-002-04 ID#12411, ID : PSAR-ESH-01-002-04 ID#12413, ID : PSAR-ESH-01-002-04 ID#15913, ID : PSAR-ESH-01-002-04 ID#13764, ID : PSAR-ESH-01-002-04 ID#13765] [Section 14.10.1.1, BOD, ID : DB-ENG-01-001 ID#12149](M.2.1, M.2.2).

Basis Discussion: The system liquid level alarm detects a failure of the ASX feed or return line and trips the interlock, which is designed to stop the melter feed sample process operations to prevent flooding the autosampler enclosure. This requirement is based on ALARA considerations if ASX enclosure were to overflow and cause exposure to employees.

Verification: Verification is expected to be achieved through the following:

Verif. Method	Verif. By	Plan	Notes/Comments
A	ENG	Perform an analysis to determine the high level setpoint required to initiate an interlock signal.	
I	ENG	Review the control logic design to verify ASX liquid level interlock with the HFP vessel sample/transfer pumps.	Documented in DVR.
T	SU/COM	Perform a test to verify the HFP vessel sample/transfer pumps shutoff upon receiving a signal from the control system in response to a high liquid-level setpoint interlock in the ASX sample enclosure.	

3.10.1.4.3 Autosampling System Valve Position to Isolate Flush Connection

Requirement: The HFP sample/transfer pumps shall not be allowed to operate or shall terminate operation whenever the ASX three-way valves are open to the sample line flush connection position. [Sections 3.3.5.1.14, 4.4.19.2, 5.5.7, PDSA - HLW Facility, ID : PSAR-ESH-01-002-04 ID#10905, ID : PSAR-ESH-01-002-04 ID#13219, ID : PSAR-ESH-01-002-04 ID#13743, ID : PSAR-ESH-01-002-04 ID#13744, ID : PSAR-ESH-01-002-04 ID#13745, ID : PSAR-ESH-01-002-04 ID#13746, ID : PSAR-ESH-01-002-04 ID#13747] [Section 14.10.1.1, BOD, ID : DB-ENG-01-001 ID#12149] (M.1.1, M.2.2).

Basis Discussion: Without this prevention, highly contaminated sample liquid from the MFPVs or PWD vessel could backflow into the flush supply line and subsequent C2 zones. The flush connection valve is closed when the pump is in operation during transfer or sampling (refer to drawing change notices 24590-HLW-M6N-ASX-00008, *General Instrumentation Revision to HLW ASX System P&ID (ASX-SMPLR-00029)*, and 24590-HLW-M6N-ASX-00010, *General Instrumentation Revision to HLW ASX System P&ID (ASX-SMPLR-00042)*).

[ALARA]

Verification: Verification is expected to be achieved through the following:

Verif. Method	Verif. By	Plan	Notes/Comments
I	ENG	Review of the control system design to verify interlock/permissive of ASX three-way valve position switches with the HFP vessel sample/transfer pumps.	Documented in DVR.
T	SU/COM	Perform a test to verify the HFP vessel sample/transfer pumps cannot start up when the ASX three-way valves are positioned open to the sample line flush connection.	
D	SU/COM	Perform a demonstration to verify the HFP vessel sample/transfer pumps shutdown when the ASX three-way valves are positioned open to the sample line flush connection while the HFP vessel sample/transfer pumps are in operation.	

3.10.1.4.4 Terminate Transfer to Melter

Requirement: **[HOLD]** The MFV ADS pumps (HFP-PMP-00001/00002/00014/00015) shall interface with the PPJ system to receive an interlock shutdown signal to stop the pumps from transferring to the HLW melters when a high pressure setpoint is reached in the melter plenum. [Sections 3.3.5.1.8, 4.4.3.3.2, PDSA - HLW Facility, ID : PSAR-ESH-01-002-04 ID#14467, ID : PSAR-ESH-01-002-04 ID#10876, ID : PSAR-ESH-01-002-04 ID#10877, ID : PSAR-ESH-01-002-04 ID#12812](M.2.1, M.2.3).

Basis Discussion: Terminating transfer to the melters when a high pressure setpoint is reached in the melter plenum, which prevents overpressurizing the HLW melter. This requirement is on "**[HOLD]**" because this was not captured in Section 4 of the PDSA and a PIER 24590-WTP-PIER-MGT-14-0626 has been issued to resolve this issue. [24590-WTP-ATS-MGT-14-0412].

[ALARA]

Verification: Verification is expected to be achieved through the following:

Verif. Method	Verif. By	Plan	Notes/Comments
A	**ENG**	Perform an analysis to determine the high pressure setpoint required to initiate an interlock signal.	
I	**ENG**	Review the control logic design to verify capability to terminate transfer from MFV to the melter when a high pressure setpoint is reached in the melter.	Documented in DVR.
D	**SU/COM**	Demonstrate the capability to automatically terminate transfer from MFV to the melter, using the PPJ, when a high pressure setpoint is reached in the melter.	

3.10.2 Nuclear Safety, ALARA, Environmental, and Other Regulatory Requirements

3.10.2.1 Safety Class Interlocks

The system design shall include the following SC interlocks:

- Glass former feed line isolation valve (Section 4.3.15, PDSA - HLW Facility) Mechanical agitator failure (Section 4.3.8, PDSA - HLW Facility)
- Non-safety air purge low flow (Section 4.3.8, PDSA - HLW Facility)
- Seismic signal (Section 4.3.21, PDSA - HLW Facility)

3.10.2.1.1 Glass Former Feed Line Isolation Valve - Safety Class Interlock

Requirement: [HOLD] The glass former feed isolation valve shall interface with the PPJ system to receive a signal to close upon any of the following conditions: [Section 4.3.15, PDSA - HLW Facility, ID : PSAR-ESH-01-002-04 ID#12491](M.2.10).

- The MFPV mechanical agitator speed or power are outside of setpoint values
- Glass formers are not being fed to the MFPVs and the glass former isolation valve is open

Basis Discussion: This closure reduces the potential for contamination to migrate into the glass former feed system. The possibility of contamination migration decreases when the glass former isolation valve is closed. Therefore, the glass former isolation valve interlocks to close if glass formers are not being fed into the MFPVs, which is monitored by a rotary valve between the screw feed auger and the glass former feed isolation valve, or when the MFPV mechanical agitator speed or power are outside of setpoint values. This requirement is on "**[HOLD]**" because the operation of a single valve for an SC interlock does not meet single failure criteria. An additional redundant means to isolate this line is required to meet single failure criteria. Additional clarification needs to be included on the monitoring of glass formers being fed into the MFPVs. [24590-WTP-ATS-MGT-14-0396].

[ALARA]

Verification: Verification is expected to be achieved through the following:

Verif. Method	Verif. By	Plan	Notes/Comments
A	ENG	Perform an analysis to determine the mechanical agitator speed and power setpoints required to isolate the glass former feed isolation valve.	
I	ENG	Review the control logic design to verify incorporation of the glass former feed line isolation valve interlock.	Documented in Safety System Requirement Specifications (SSRS)
T	SU/COM	Perform a test to verify the glass former feed line isolation valve closes in response to interlock signal.	

3.10.2.1.2 Mechanical Agitator Failure - Safety Class Interlock

Requirement: [**HOLD**] The HFP vessel sparger design shall interface with the PPJ system to receive a mechanical agitator failure SC interlock signal, when the agitator speed and motor power values are outside established setpoints, which shall automatically transition the air spargers from idle purge to emergency sparge mode. [Sections 4.3.8, 4.3.8.4 PDSA - HLW Facility, ID : PSAR-ESH-01-002-04 ID#15754, ID : PSAR-ESH-01-002-04 ID#12357, ID : PSAR-ESH-01-002-04 ID#12358, ID : PSAR-ESH-01-002-04 ID#12359, ID : PSAR-ESH-01-002-04 ID#12360, ID : PSAR-ESH-01-002-04 ID#12361, ID : PSAR-ESH-01-002-04 ID#12362](M.2.6, M.2.7).

Basis Discussion: The HFP spargers are relied upon to provide sufficient agitation to mix the waste in the event that the mechanical agitator is unavailable. If the mechanical agitator speed or power values are outside established setpoints, then the PPJ system automatically activates the emergency spargers in the HFP vessels. Emergency sparge mode reduces the potential for a hydrogen explosion in HFP vessels by mixing the waste upon failure of an agitator. The safety basis requires this to be an automated function controlled by the PPJ system. This requirement is on "[**HOLD**]" due to differences between the SDS and the PDSA - HLW Facility; the resolution is expected to eliminate sparging. [24590-WTP-ATS-MGT-14-0410].

Verification: Verification is expected to be achieved through the following:

Verif. Method	Verif. By	Plan	Notes/Comments
A	ENG	Perform an analysis to determine the mechanical agitator speed and power setpoints required to transition the air spargers to emergency sparge mode.	
I	ENG	Review the control logic design to verify interface between the mechanical agitator speed and power sensors and the PPJ system to control the hydrogen mitigation system modes of operation.	Document in SSRS
T	SU/COM	Test the PPJ system to verify the emergency sparger mode is initiated when the mechanical agitator is unavailable (i.e., speed or power outside setpoints).	

3.10.2.1.3 Purge Air Low Flow - Safety Class Interlock

Requirement: [**HOLD**] The system design shall interface with the PPJ system to receive a non-safety air purge low flow SC interlock signal, if the air purge flow rate is below the normal flow setpoint, which will automatically transition the safety air control valves from non-safety to safety air supply to the HFP vessel spargers. [Sections 4.3.8, 4.3.8.4 PDSA - HLW Facility, ID : PSAR-ESH-01-002-04 ID#15754, ID : PSAR-ESH-01-002-04 ID#12357, ID : PSAR-ESH-01-002-04 ID#12358, ID : PSAR-ESH-01-002-04 ID#12359, ID :

PSAR-ESH-01-002-04 ID#12360, ID : PSAR-ESH-01-002-04 ID#12361, ID : PSAR-ESH-01-002-04 ID#12362] (M.2.5, M.2.8)

Basis Discussion: The safety basis requires this to be an automated function controlled by the PPJ system. This requirement is on "**[HOLD]**" due to differences between the SDS and the PDSA - HLW Facility; the resolution is expected to eliminate sparging. [24590-WTP-ATS-MGT-14-0410].

Verification: Verification is expected to be achieved through the following:

Verif. Method	Verif. By	Plan	Notes/Comments
A	ENG	Perform an analysis to determine the low normal flow setpoint which transitions the safety air control valves to the safety air supply.	
I	ENG	Review the control logic design to verify interface between the mechanical agitator speed and power sensors and the PPJ to control the safety air control valves.	Document in SSRS
T	SU/COM	Perform a test the PPJ system to verify the ISA safety air control valves switch from non-safety purge ISA to safety ISA supply to the spargers when the flow rate drops below the setpoint.	

3.10.2.1.4 Seismic Signal - Safety Class Interlock

Requirement: [HOLD] The system design shall interface with the PPJ system to receive seismic signal SC interlock signal, which will automatically activate the air amplifiers on each HFP vessel in response to a seismic event. [Sections 4.3.7.2.2, 4.3.21, PDSA - HLW Facility, ID : PSAR-ESH-01-002-04 ID#12278, ID : PSAR-ESH-01-002-04 ID#12659, ID : PSAR-ESH-01-002-04 ID#15794](M.2.11).

Basis Discussion: The seismic signal interlocks mitigate post-seismic event consequences by performing required actions to achieve a safer facility state. Administrative controls will direct assessing the seismic monitoring or other alternate means and determine whether the manual activation of the seismic signal is required. Following a determined seismic action level, and per emergency response procedures, the operator activates the seismic signal. The manual activation will prompt the PPJ automatic control system and other interlocks to complete the required activation and isolation actions. This requirement is on "**[HOLD]**" due to a note in PDSA Section 4.3.21 which states: "The design of the seismic switch feature is being evaluated. An update to this section will be provided after completion of a new hazards analysis." The hold will be removed once the PDSA is updated and associated ROINs are incorporated. [24590-WTP-ATS-MGT-15-0447]

[ALARA]

Verification: Verification is expected to be achieved through the following:

Verif. Method	Verif. By	Plan	Notes/Comments
I	ENG	Review the control logic design to verify activation of the air amplifiers upon initiation of the seismic signal interlock.	Documented in DVR.
D	SU/COM	Demonstrate the HFP vessel air amplifiers are activated in response to a seismic signal interlock signal.	

3.10.2.2 Safety Significant Interlocks

The system design shall include the following SS interlocks:

- HFP-VSL-00001/HFP-VSL-00005 high-high liquid level feed diversion valve (Section 4.4.4, PDSA HLW Facility)
- Glass former feed line isolation interlocks and purge air (Section 4.4.23, PDSA HLW Facility)

3.10.2.2.1 MFPV Feed Diversion Valve - High-High Liquid Level Safety Significant Interlock

Requirement: [**HOLD**] The MFPV feed diversion valve shall interface with the PPJ system to receive a high-high liquid level interlock signal, if the MFPV content levels exceed setpoint values, which will close valve to stop the waste transfer to the MFPV and shutdown the HLP transfer pumps. [Sections 4.4.4, 5.5.9, PDSA - HLW Facility, ID : PSAR-ESH-01-002-04 ID#13757, ID : PSAR-ESH-01-002-04 ID#15853][Section 14.10.1.1, BOD, ID : DB-ENG-01-001 ID#12149, ID : DB-ENG-01-001 ID#12151](M.2.1, M.2.9).

Basis Discussion: If MFPV content levels exceed setpoint values, the PPJ then closes the feed diversion valve to prevent the MFPVs from being overfilled with HLW concentrate. This requirement is on "HOLD" due to differences between the SDS and the PDSA - HLW Facility. The PDSA Section 4.4.4 currently states that the MFPV feed diversion valve interlock is designed to close the valve to prevent overfilling the MFPVs and divert the waste back to the PT Facility. [24590-WTP-ATS-MGT-14-0413].

[ALARA]

Verification: Verification is expected to be achieved through the following:

Verif. Method	Verif. By	Plan	Notes/Comments
A	ENG	Perform an analysis to determine the MFPV high level setpoints which initiate interlock signals to shutdown the HLP pumps.	
I	ENG	Review the control logic design to verify incorporation of the high-high liquid level feed diversion valve interlock.	Document in SSRS
T	SU/COM	Verify the high-high liquid level feed diversion valve interlock will shut the feed diversion valve and turn off the HLP transfer pumps when MFPV content levels exceed setpoint values.	

3.10.2.2.2 Glass Former Feed Line Isolation Interlocks - Safety Significant Interlock

Requirement: [**HOLD**] The glass former feed isolation valve shall interface with the PPJ system to receive a signal to close, if any of the following MFPV setpoint values are exceeded: [Sections 4.4.23, 4.4.23.3, PDSA - HLW Facility, ID : PSAR-ESH-01-002-04 ID#13325, ID : PSAR-ESH-01-002-04 ID#13338] (M.2.10).

- Headspace pressure high
- Waste level high
- HOP pressure low

Basis Discussion: This interlock reduces the probability of radiological exposure to a facility worker by closing the glass former feed isolation valve upon indication of potential for loss of confinement. This requirement is on "[**HOLD**]" until it is determined whether the GFR isolation valve must be designed as SC or SS. [24590-WTP-ATS-MGT-14-0396].

[ALARA]

Verification: Verification is expected to be achieved through the following:

Verif. Method	Verif. By	Plan	Notes/Comments
A	ENG	Perform an analysis to determine the Headspace pressure, Waste level, and HOP pressure setpoints which initiate the glass former feed interlock.	
I	ENG	Review the control logic design to verify incorporation of the glass former feed line isolation valve interlock.	Document in SSRS
T	SU/COM	Test the glass former feed line isolation valves close in response to the interlock signal from the scenarios listed above.	

3.10.2.3 Implementation of Active Safety Instrumented Functions

Requirement: The active safety instrumented functions for the HFP and HCP system shall be designed in accordance with the safety criterion 4.3-1, 4.3-3, 4.3-4, 4.3-6, 4.4-1 and 4.4-2 of the SRD. [Safety Criterion, 4.3-1, 4.3-3, 4.3-4, 4.3-6, 4.4-1 and 4.4-2, SRD, ID : SRD-ESH-01-001-02 ID#44, ID : SRD-ESH-01-001-02 ID#46, ID : SRD-ESH-01-001-02 ID#47, ID : SRD-ESH-01-001-02 ID#50, ID : SRD-ESH-01-001-02 ID#53, ID : SRD-ESH-01-001-02 ID#54,] (M.2)

Basis: The SRD establishes the criterion and applicable standards for the safety design. The design processes including 24590-WTP-GPG-J-015, *Safety Instrumented System Implementation* and the electrical design criteria are used to ensure independence and design compliance with the mandated standards. The completed designs are documented in Safety Systems Requirements Specification and other design documents, which are required to be verified to ensure compliance with the standards.

Verification: Verification is expected to be achieved through:

Verif. Method	Verif. By	Plan	Notes/Comments
I	ENG	Verify the Safety Systems Requirements Specifications and designs are in accordance with the criteria and standards in Safety Criteria 4.3-1, 4.3-3, 4.3-4, 4.3-6, 4.4-1 and 4.4-2 of 24590-WTP-SRD-ESH-01-001-02, Safety Requirements Document Volume II.	Documented in DVR.

3.10.2.5 Additional Safety Instrumentation: Single Failure Criteria / Safety Class Requirements

Requirement: The HFP and HCP system, SC safety instrumented functions shall be designed in accordance with safety criterion 4.3-2 and 4.3-5 of 24590-WTP-SRD-ESH-01-001-02, Safety Requirements Document Volume II. [Safety Criterion, 4.3-2 and 4.3-5, SRD, ID : SRD-ESH-01-001-02 ID#45, ID : SRD-ESH-01-001-02 ID#48] (M.2)

Basis: For safety instrumented functions to meet the single failure criterion, additional work related to fire zone separation and a detailed single failure analysis following the guidance in 24590-WTP-GPG-ENG-0159, *Single Failure Analysis Process for Mechanical, HVAC and Control Systems,* is required. The completed designs are

documented in Safety Systems Requirements Specification and other design documents, which are required to be verified to ensure compliance with standards.

Verification: Verification is expected to be achieved through:

Verif. Method	Verif. By	Plan	Notes/Comments
I	ENG	Verify the Safety Systems Requirements Specifications and designs are in accordance with the criterion and standards in safety criterion 4.3-2 and 4.3-5 of 24590-WTP-SRD-ESH-01-001-02, Safety Requirements Document Volume II.	Documented in DVR.

3.10.3 System Interface Requirements

3.10.3.1 Active Safety Instrumentation, Programmable Protection System

Requirement: The HFP and HCP Instruments with active safety functions are required to interface with the PPJ or be engineered as local safety instrumented functions. Signal interfaces shall use standard 4-20 mA or digital contacts. Appendix C provides a list of the HFP and HCP active safety instrumented functions and implementing components for the HSH system. [Section 7.1, BOD, ID : DB-ENG-01-001 ID#10529] (M.2)

Basis: Active safety instrumentation is implemented independently to the normal control system (PCJ/ MHJ) through the PPJ system or in local logic solvers. The PPJ is the main safety system logic solver used on WTP and includes logic programming to implement the active safety controls. **Verification:** Verification is expected to be achieved through:

Verif. Method	Verif. By	Plan	Notes/Comments
I	ENG	Verify required interface included in specifications and material requisitions (MRs) used to procure active safety instruments.	

3.10.3.2 Process Control System - Instruments

Requirement: Instruments connected to the PCJ system shall not perform any credited active safety function. Instruments connected to the PCJ may include and perform safety boundary or retention functions. HFP instruments shall use standard commercially available instrumentation and communication protocols to interconnect to the PCJ system. Fieldbus or Modbus communication may be used. [Section 9.4.1, BOD, ID : DB-ENG-01-001 ID#10963, ID : DB-ENG-01-001 ID#10964] (M.1).

Basis Discussion: The PCJ is used as the normal process control system. The PCJ allows remote operator control and monitoring of the HFP processes (e.g., provisions for process level, temperature, pressure, cooling, and mixing, along with the ability to control and monitor pumps, motors, and valves to operate the HFP systems). Alarms and warnings are provided to bring operator attention to, and allow rectification of abnormal process situations.

The instruments are part of the HFP. The system logic and control software is part of the HFP, but resides and is implemented by the PCJ. The software interfaces with software and hardware on other systems to collectively form an integrated control system for WTP.

Verification: Verification is expected to be achieved through the following:

Verif. Method	Verif. By	Plan	Notes/Comments
I	ENG	Verify required specifications (related to PCJ interface) are included in MRs used to procure instruments.	May be documented in an assessment/evaluation.

3.10.4 Other Technical, Specialty, Operations and Maintenance Requirements

3.10.4.1 Process Control System - Remote Control Operations

Requirement: The HFP design shall include the following capabilities that are remotely controlled or monitored by the PCJ system: [Sections 9.4.2, 11.4.1, 11.8.3.1, BOD, ID : DB-ENG-01-001 ID#10966, ID : DB-ENG-01-001 ID#11420, ID : DB-ENG-01-001 ID#11547, ID : DB-ENG-01-001 ID#11548][Section 14.4, ORD, ID : RPT-OP-01-001 ID#1485](M.1.1, M.1.2).

Melter Feed Preparation Vessels:

- The design shall have the capability to remotely monitor the vessel headspace pressure, liquid level, and contents temperature using the PCJ.

Melter Feed Vessels:

- The design shall have the capability to remotely monitor the vessel headspace pressure, liquid level, and contents temperature using the PCJ.

Mechanical Agitators (Motor and Impeller):

- The design shall have the capability to remotely start and terminate operation using the PCJ (interlocks are provided via the PPJ).
- The design shall have the capability to transmit the operating shaft rotation speed and motor power to the PCJ.

Pumps (Sample/Transfer and ADS):

- The design shall have the capability to remotely start and terminate operation using the PCJ (interlocks are provided via the PPJ).
- The design shall have the capability to transmit the sampling transfer rate to the PCJ.
- The design shall include remote automatic sampling capability.

Spargers [HOLD]:

- The design shall have the capability to remotely start and terminate operation using the PCJ (interlocks are provided via the PPJ).
- The design shall have the capability to transmit the sparger airflow rate to the PCJ.

Monitoring Instruments:

- The design shall have the capability to communicate with the PCJ.
- The design shall provide the capability to access instruments to calibrate in-place or remove to calibrate in the maintenance area.

Remote Operated Valves:

- The design shall have the capability to remotely open or close using the PCJ (interlocks are provided via the PPJ).
- The design shall have the capability to transmit the operating position to the PCJ.

Basis Discussion: Only the spargers are on "[HOLD]" due to differences between the SDS and the PDSA - HLW Facility and the resolution is expected to eliminate sparging. [24590-WTP-ATS-MGT-14-0410].

Verification: Verification is expected to be achieved through the following:

Verif. Method	Verif. By	Plan	Notes/Comments
I	ENG	Review of design to verify control room remote monitoring and control features.	May be documented in an assessment/evaluation.
D	SU/COM	Demonstrate the PCJ remote control operations for all the listed HFP equipment/components on both melter lines.	

3.10.4.2 Programmable Protection System - Remote Control Operations

Requirement: All PPJ monitoring and control functions shall be forwarded to the PCJ system for operator interface. [Section 7.3.7.4, 9.10, BOD, ID : DB-ENG-01-001 ID#10611, ID : DB-ENG-01-001 ID#10612, ID : DB-ENG-01-001 ID#11143](M.2.1, M.2.2, M.2.3, M.2.4, M.2.5, M.2.6, M.2.7, M.2.8, M.2.9, M.2.10, M.2.11).

Basis Discussion: The PPJ functions (i.e., interlocks) are covered elsewhere in the document. Design guide 24590-WTP-GPG-J-015, *Safety Instrumented System Implementation*, provides the implementing instructions for this requirement.

Verification: Verification is expected to be achieved through the following:

Verif. Method	Verif. By	Plan	Notes/Comments
I	ENG	Review of design to verify that all PPJ monitoring and control functions are forwarded to the PCJ.	Documented in logic diagrams and SSRS.
D	SU/COM	Demonstrate all PPJ monitoring and control functions are forwarded to the PCJ.	Recommended to be performed in conjunction with individual PPJ requirements.

3.10.4.3 Accessibility for Calibration, Testing, and Inspection

Requirement: The HFP system design shall provide the capability to access and perform remote (in cave) or direct (out cave) calibration, maintenance, periodic functional testing, and inspections of equipment and components during normal operation in areas that are ALARA. [Section 6.7, 8.1.2, 9.12, 11.3.2.2, 11.5.1, 12.6.3, BOD, ID : DB-ENG-01-001 ID#10415, ID : DB-ENG-01-001 ID#10698, ID : DB-ENG-01-001 ID#11150, ID : DB-ENG-01-001 ID#11396, ID : DB-ENG-01-001 ID#11459, ID : DB-ENG-01-001 ID#11736][Section 9.1, 11.16, ORD, ID : RPT-OP-01-001 ID#1185, ID : RPT-OP-01-001 ID#1186, ID : RPT-OP-01-001 ID#1173] [Section III.10.C.5.c.iii., Dangerous Waste Portion of RCRA Permit, ID : WA7890008967 WTP ID#191].

Basis Discussion: Instruments requiring hands on preventive maintenance activities such as calibrations, functional testing or replacement should be incorporated into the system design so that online maintenance may be performed. Temperature elements installed in thermowells should allow removal without interrupting the process. Instrumentation required on contaminated process is preferable to located on remotely maintainable jumpers.

[ALARA]

Verification: Verification is expected to be achieved through the following:

Verif. Method	Verif. By	Plan	Notes/Comments
I	ENG	Review design to verify configuration facilitates replacement and removal, or remote/direct calibration and maintenance, of equipment in areas that are ALARA.	Document in an evaluation/assessment. Plant Engineering to participate in and / or review the evaluation/assessment.

3.10.4.4 Automatic Flushing Controls

Requirement: [**HOLD**] Automatic flushing controls shall be provided for MFPV to MFV transfer and post-sampling of the HFP system, and on termination of transfer from MFV to melter and shall interface with the controls for the DIW, PWD, and ASX systems. [Section 20.0, ORD, ID : RPT-OP-01-001 ID#1730] [Section 6.2.1, BOD, ID : DB-ENG-01-001 ID#10322] (M.1.1).

Basis Discussion: Automatic flushing controls of the sample and transfer lines will help to remove waste and prevent plugging (refer to Section 4.1.4 of 24590-HLW-TB-ENG-13-0002, *Engineering Design Decision for HLW HFP* and Section 4.10.3 of 24590-HLW-ES-ENG-13-003, *Risk Reduction Study for the High Level Waste (HLW) Facility: Failure Modes, Effects, and Criticality Analysis (FMECA), In-Service Inspection (ISI), and Plugging*). This requirement is on "[HOLD]" because this change has not yet been documented in the safety basis or in the change control process. [24590-WTP-ATS-MGT-14-0414].

[ALARA]

Verification: Verification is expected to be achieved through the following:

Verif. Method	Verif. By	Plan	Notes/Comments
I	ENG	Review the control logic to verify automatic flushing controls and interfaces with the DIW and ASX systems	
T	SU/COM	Test automatic flushing operations post-transfer and post-sampling for each transfer/sample line.	

3.11 Other Structures, Systems, and Components Requirements

3.11.1 Mission and Functional / Performance Requirements (Including States/Modes)

3.11.1.1 Demisters

Requirement: Each HFP vessel shall include a demister designed with a minimum efficiency to support the operation of the HOP system. (J.1.1).

Basis Discussion: Demisters are located on top of the HFP vessels and connect vessel to the HOP/PVV vent line.

The demisters prevent excessive moisture and aerosols from being carried into the HOP HEPA filters. [ALARA]

Verification: Verification is expected to be achieved through the following:

Verif. Method	Verif. By	Plan	Notes/Comments
A	ENG	Perform an analysis to determine the demister minimum efficiency and droplet size.	

Verif. Method	Verif. By	Plan	Notes/Comments
I	ENG	Review of design to verify conformance to the analysis results.	

3.11.2 Nuclear Safety, ALARA, Environmental, and Other Regulatory Requirements

3.11.2.1 Air Amplifiers

3.11.2.1.1 Maintain Negative Pressure

Requirement: Each HFP vessel shall include an air amplifier system designed to maintain negative pressure in the vessel headspace by discharging airflow into the melter cave, in response to seismic signal activation. [Sections 3.4.2.1.1.3, 4.3.7.2, 4.3.7.2.2, PDSA - HLW Facility, ID : PSAR-ESH-01-002-04 ID#11983, ID : PSAR-ESH-01-002-04 ID#12278, ID : PSAR-ESH-01-002-04 ID#12273, ID : PSAR-ESH-01-002-04 ID#10319, ID : PSAR-ESH-01-002-04 ID#12280, ID : PSAR-ESH-01-002-04 ID#12281](M.2.11).

Basis Discussion: Each air amplifier system (includes instrumentation and controls, valves, air distribution piping, and air amplifier with flapper valve) is supplied by safety air and has a flapper valve that opens into the melter cave. The air amplifiers (air ejectors) are located on top of the HFP vessels and mitigate pressurization of the HFP vessels by discharging excess air into the C5 melter cave. The air amplifier creates a low pressure in the headspace, which draws air in the overflow line through the flapper valve and exhausts the headspace gasses into the melter cave. The air amplifiers remain off during normal operations and automatically turn on when activated by the seismic shutdown signal.

Verification: Verification is expected to be achieved through the following:

Verif. Method	Verif. By	Plan	Notes/Comments
I	ENG	Review the design to verify incorporation of an air amplifier system for each HFP vessel sized to maintain negative pressure in the vessel headspace.	Documented in DVR.
D	SU/COM	Demonstrate the air amplifier is activated by the seismic shutdown signal.	This will be performed during the verification of requirement 3.10.2.1.4

3.11.2.1.2 Operability

Requirement: The air amplifiers shall continuously operate upon activation under post-seismic conditions. The HFP vessel air amplifiers shall be designed to prevent its opening mechanism from fully sealing closed. [Section 4.3.7.2.2 PDSA - HLW Facility, ID : PSAR-ESH-01-002-04 ID#12280, ID : PSAR-ESH-01-002-04 ID#12281].

Basis Discussion: The air amplifier is to be designed to not fully close during normal operations to prevent accumulation of solids around the opening mechanism's sealing surfaces that could cause it to adhere closed to the vessel. This could result in the air amplifier failing to open under abnormal operations (loss of negative pressure).

Verification: Verification is expected to be achieved through the following:

Verif. Method	Verif. By	Plan	Notes/Comments
I	ENG	Review of the design to verify the opening mechanism, of the air amplifier, to not be fully sealed to the vessel when closed.	Documented in DVR.

3.11.3 System Interface Requirements

3.11.3.1 Air Amplifiers

3.11.3.1.1 Instrument Service Air - Air Supply

Requirement: **[HOLD]** The air amplifiers shall interface with the safety ISA system to receive the required flow of air to maintain negative pressure in the HFP vessels relative to the C3 zones when the facility is in seismic shutdown response mode. [Sections 3.3.5.2.12, 4.3.7.2.2, 4.3.23.2, PDSA - HLW Facility, ID : PSAR-ESH-01-002-04 ID#15877, ID : PSAR-ESH-01-002-04 ID#12277, ID : PSAR-ESH-01-002-04 ID#12710, ID : PSAR-ESH-01-002-04 ID#10604](I.3).

Basis Discussion: Per sheets 6, 7, and 82 of *Air Sparging Line Sizing Calculation*, 24590-HLW-M6C-HFP-00013, the air amplifiers are designed to operate by receiving 50 scfm of air at 80 psig to maintain negative pressure in the HFP vessels. The air amplifiers require safety compressed air to maintain a negative pressure in the HFP vessels during emergency sparge mode following the activation of the seismic signal. The negative pressure in the HFP vessels prevents a flow of unfiltered air from the HFP vessel headspace through a potentially broken utility/instrument line and into the C2/C3 zones. This requirement is on "**[HOLD]**" due to the differences between the SDS and the PDSA - HLW Facility and the resolution is expected to eliminate sparging. [24590-WTP-ATS-MGT-14-0410].

[ALARA]

Verification: Verification is expected to be achieved through the following:

Verif. Method	Verif. By	Plan	Notes/Comments
A	ENG	Perform an analysis to verify the ISA provides sufficient flow to maintain negative pressure in the vessel under post seismic conditions.	Documented in DVR.
D	SU/COM	Demonstrate the air amplifiers maintain negative pressure in the HFP vessels, relative to the C3 zones, when the facility is in seismic shutdown response mode.	

3.11.3.2 Control Valves and Instruments

3.11.3.2.1 Instrument Service Air - Air Supply

Requirement: The HFP control valves and instruments shall interface with the ISA system to receive air supply to provide the motive force to open/operate control valves and instruments. (I.3).

Basis Discussion: Remote operation reduces personnel exposure.

[ALARA]

Verification: Verification is expected to be achieved through the following:

Verif. Method	Verif. By	Plan	Notes/Comments
I	ENG	Review of design to verify the HFP control valves and instruments interfaces with the ISA system.	

3.11.4 Other Technical, Specialty, Operations and Maintenance Requirements

None.

3.12 Relevant Codes and Standards

3.12.1 Codes of Record

Table 3–6 identifies relevant external codes and standards applicable to the HCP and HFP design. These are selected from those documents that comprise the Code of Record (COR) as established in 24590-WTP-RPT-ENG-01-001, technical Baseline Description (i.e., the WTP Contract, the Basis of Design (BOD), and the Safety Requirements Document Volume II (SRD). Use of these documents is typically invoked in the design process through the documents identified in Section 3.10.2. Beyond inclusion here, no attempt is made in this documents for allocation to SSCs.

In some cases, the expected means of verification may be established on the basis of tests or other criteria required by the codes and standards. This does not necessarily include verification or testing more appropriately defined in the procurement of individual sub-systems or components, or which is a routine activity defined by specifications and/or procedures used by construction and startup.

Table 3–6 HCP and HFP Applicable Codes and Standards

Implementing Codes and Standards: [Contract No. DE-AC27-01RV14136, WTP Contract]
• Not applicable
Implementing Codes and Standards: [24590-WTP-DB-ENG-01-001, Rev 1Q, Basis Of Design]
• API STD-620, *Design and Construction of Large, Welded, Low-Pressure Storage Tanks.*
• AWS D1.1, *Structural Welding Code - Steel.*
• AWS D1.6, *Structural Welding Code - Stainless Steel.*
• WAC 173-303, *Washington Administrative Code - Dangerous Waste Regulations.*
Implementing Codes and Standards: [24590-WTP-SRD-ESH-01-001-02, Rev 7, Section 4, *SRD*]
• ANSI/ANS 58.8-1994, *Time Response Design Criteria for Safety-Related Operator Actions.*
• ANSI/ANS 58.9-1981, *Single Failure Criteria for Light Water Reactor Safety-Related Fluid Systems.*
• ANSI/ISA-67.04.01-2006, *Setpoints for Nuclear Safety-Related Instrumentation*, as tailored in Appendix C of the SRD.
• ASME B31.3-1996, *Process Pipin*g, as tailored in Appendix C of the SRD
• ASME SEC VIII, *Boiler and Pressure Vessel Codes, Rules for Construction of Pressure Vessels*
• IEEE 323-83, Qualifying Class 1E Equipment for Nuclear Power Generating Stations, as tailored in Appendix C of the SRD.
• IEEE 338-1987, *Standard Criteria for Periodic Surveillance Testing of Nuclear Power Generating Station Safety Systems*, as tailored in Appendix C of the SRD.
• IEEE 344-1987 (R1993), IEEE Recommended Practice for Seismic Qualification of Class 1E Equipment for Nuclear Power Generating Stations, as tailored in Appendix C of the SRD.
• IEEE 379-1994, Application of the Single Failure Criterion to Nuclear Power Generating Station Safety Systems, as tailored in Appendix C of the SRD.
• IEEE 384-1992, *Standard Criteria for Independence of Class 1E Equipment and Circuits*, as tailored in Appendix C of the SRD.
• IEEE 497-2002, *Standard Criteria for Accident Monitoring Instrumentation for Nuclear Power Generating Stations* as tailored in Appendix C of the SRD.
• IEEE 1023-88, *Guide for the Application of Human Factors Engineering to Systems, Equipment, and Facilities of Nuclear Power Generating Stations.*

Table 3–6 HCP and HFP Applicable Codes and Standards

• ISA-S84.01-1996, *Application of Safety Instrumented Systems for the Process Industries.*
• NFPA 70-1999, *National Electrical Code*
• NFPA 69-2002, *Standard on Explosion Prevention Systems*, as tailored in Appendix C.
• NFPA 801-2003, *Standard for Fire Protection for Facilities Handling Radioactive Materials*, as tailored in Appendix C of the SRD.
Implementing Codes and Standards: [24590-WTP-PSAR-ESH-01-002-04, Rev 5a, HLW Preliminary Documented Safety Analysis (PDSA)]
• ANSI N42.18-1980 (R1991), *Specification and Performance of On-Site Instrumentation for Continuously Monitoring Radioactivity in Effluents.*
• ASTM A 312, *Standard Specification for Seamless, Welded, and Heavily Cold Worked Austenitic Stainless Steel Pipes.*
• ASTM A 240, *Standard Specification for Chromium and Chromium-Nickel Stainless Steel Plate, Sheet, and Strip for Pressure Vessels and for General Applications.*

3.12.2 WTP Design Criteria, Design Guides, and General Specifications

Table 3–7 identifies relevant discipline design criteria, guides, and general specifications applicable to the HCP and HFP systems. Use of these documents to develop the detailed design of SSCs is governed by engineering procedures. The majority of requirements contained within this document are derived from external codes and standards, or are specified methods and approaches to achieve standardization and consistency of design. Beyond inclusion here, no attempt is made in this document to extract individual design requirements from these documents for tracing and verification, or to define how direction provided by these documents is applicable and allocated (or not) to individual SSCs.

Table 3–7 WTP Design Criteria, Design Guides, and General Specifications Applicable to HCP and HFP

Document Number	Title
Design Criteria Documents:	
24590-WTP-DC-M-06-001	Mechanical Systems Design Criteria
24590-WTP-DC-E-01-001	Electrical Design Criteria
24590-WTP-DC-E-06-002	Design Criteria for Independence of Safety Equipment and Circuits
24590-WTP-DC-E-07-001	Design Criteria for Electrical Jumpers
24590-WTP-DC-ENG-06-001	Design Criteria for Environmental and Natural Phenomena Hazard Qualification of Structures Systems and Components
24590-WTP-DC-PS-01-001	Pipe Stress Design Criteria Including "Pipe Stress Criteria" and "Span Method Criteria"
24590-WTP-DC-PS-01-002	Pipe Support Design Criteria
24590-WTP-DC-PS-03-001	Jumper Stress Design Criteria
24590-WTP-DC-ST-04-001	Seismic Analysis and Design Criteria
Design Guides:	
24590-WTP-GPG-ENG-004	Design Guide Pipe Stress, Pipe Layout, and Support Spacing
24590-WTP-GPG-ENG-005	Engineering Design Guide for Pipe Support
24590-WTP-GPG-ENG-086	Equipment Environmental Qualification
24590-WTP-GPG-ENG-0094	Pipe Design Work Process

Table 3–7 WTP Design Criteria, Design Guides, and General Specifications Applicable to HCP and HFP

Document Number	Title
24590-WTP-GPG-ENG-0099	Design Verification of Plant Design Deliverables
24590-WTP-GPG-ENG-0103	Equipment Seismic Qualification
24590-WTP-GPG-ENG-0109	Accessibility Review of Equipment and Components
24590-WTP-GPG-ENG-0118	Piping Component Stock Codes
24590-WTP-GPG-ENG-0119	Isometric Drawings Production
24590-WTP-GPG-ENG-0123	Disposition of Hard to Reach Spools
24590-WTP-GPG-ENG-0127	Processing Engineering Calculations
24590-WTP-GPG-ENG-0129	Waste Acceptance Impacting Determination
24590-WTP-GPG-ENG-0130	Waste Acceptance Impacting Item Qualification Plan
24590-WTP-GPG-ENG-0140	Hot Pipe Penetrations Through Concrete
24590-WTP-GPG-ENG-0141	WTP Radiation Damage Thresholds for Non-Metallic Materials
24590-WTP-GPG-ENG-0144	Piping Interface with Flexible Equipment-Stress Analysis Design Guide
24590-WTP-GPG-ENG-0145	SC-IIIE Piping - Stress Analysis Design Guide
24590-WTP-GPG-ENG-0146	Piping Coating System Selection Guide
24590-WTP-GPG-ENG-0149	Piping Classification Guide
24590-WTP-GPG-ENG-0150	Plant Design/Mechanical Systems Equipment Interfaces: Terminal End Equipment
24590-WTP-GPG-ENG-0153	Safety Instrumentation - Independent Protection Layer Identification
24590-WTP-GPG-ENG-0159	Single Failure Analysis Process for Mechanical, HVAC, and Control Systems
24590-WTP-GPG-ENG-0165	Pipe Stress and Supports Confirmation
24590-WTP-GPG-J-005	Control Systems Interfaces
24590-WTP-GPG-J-014	Control Systems Design Process Guide
24590-WTP-GPG-J-015	Safety Instrumented System Implementation
24590-WTP-GPG-J-016	Control Valve Sizing
24590-WTP-GPG-J-017	WTP Seismic Category Application to C&I Systems
24590-WTP-GPG-J-0057	Setpoint Calculations
24590-WTP-GPG-M-002	Hydraulic Seals
24590-WTP-GPG-M-005	Ejectors (Jet Pumps) for Liquid Slurry Pumping
24590-WTP-GPG-M-009	Jet Pumps (Ejectors) for Vacuum Generation
24590-WTP-GPG-M-011	Pipe Sizing for Compressible Flow
24590-WTP-GPG-M-012	Pump Net Positive Suction Head
24590-WTP-GPG-M-013	Plant Wash System Design
24590-WTP-GPG-M-016	Pipe Sizing for Lines with Liquids Containing Solids - Bingham Plastic Model
24590-WTP-GPG-M-017	Design Parameters & Test Pressures for Equipment & Piping
24590-WTP-GPG-M-019	Vessel Sizing
24590-WTP-GPG-M-022	Liquid and Vapor Line Sizing By Formula

Table 3–7 WTP Design Criteria, Design Guides, and General Specifications Applicable to HCP and HFP

Document Number	Title
24590-WTP-GPG-M-023	Other Losses in Piping Systems
24590-WTP-GPG-M-027	Recommended Slopes for Piping Systems
24590-WTP-GPG-M-028	Vent, Drain, and Root Valve Sizing and Selection for Piping Systems
24590-WTP-GPG-M-032	Vessel Overflow and Gravity Line Sizing
24590-WTP-GPG-M-036	Determining Quality Level and Seismic Category Classification of Sub-Components, Assemblies, Sub-Assemblies, and Parts
24590-WTP-GPG-M-047	Preparation of Corrosion Evaluations
24590-WTP-GPG-M-050	Pressure Vessel and Heat Exchanger Design
24590-WTP-GPG-M-052	Specifying Design Cycles for Equipment and Piping
24590-WTP-GPG-M-0058	Minimum Flow Velocity for Slurry Lines
24590-WTP-GPG-M-0059	Avoiding Chemical Line Plugging - Plant Design Considerations
24590-WTP-GPG-M-0061	Vessel Structural Analysis and ASME Section VIII Evaluation
24590-WTP-GPG-P-0003	Jumper Design Guide
24590-WTP-GPG-PL-002	Plant Design Material Control Guide
24590-WTP-GPG-SRAD-001	Design Guide for ALARA
Specifications:	
24590-HLW-3PS-HFP-T0003	Engineering Specification for HLW Melter Feed System Demisters, Air Ejectors and Overflow Flapper Valves
24590-WTP-3PS-G000-T0002	Engineering Specification for Positive Material Identification (PMI) for Shop Fabrication
24590-WTP-3PS-G000-T0015	Engineering Specification for Environmental Qualification of Mechanical Equipment
24590-WTP-3PS-JQ00-T0004	Engineering Specification for Management of Supplier Software
24590-WTP-3PS-JQ00-T0005	Engineering Specification for Management of Supplier Safety Software
24590-WTP-3PS-JQ06-T0005	Engineering Specification for Environmental Qualification of Control and Electrical Systems and Components
24590-WTP-3PS-JQ07-T0001	Engineering Specification for Instrumentation for Package Systems
24590-WTP-3PS-JQ08-T0001	Engineering Specification for Construction and Installation of Controls and Instrumentation
24590-WTP-3PS-M000-T0001	Engineering Specification for Air Displacement Slurry Pumps
24590-WTP-3PS-MACS-T0003	Engineering Specification for Mechanical Agitators
24590-WTP-3PS-MPC0-T0009	Engineering Specification for Vessel-Mounted Vertical Transfer Pumps - WTP HLW Facility
24590-WTP-3PS-MV00-T0001	Engineering Specification for Pressure Vessel Design and Fabrication
24590-WTP-3PS-MV00-T0002	Engineering Specification for Seismic Qualification Criteria for Pressure Vessels
24590-WTP-3PS-MV00-T0003	Engineering Specification for Pressure Vessel Fatigue Analysis
24590-WTP-3PS-NWP0-T0001	Engineering Specification for General Welding and NDE Requirements for Supplier Fabricated Piping
24590-WTP-3PS-PB01-T0001	Engineering Specification for Technical Supply Conditions for Pipe, Fittings, and Flanges
24590-WTP-3PS-PH01-T0001	Engineering Specification for Technical Supply Conditions 'QL' Pipe Supports

Table 3–7 WTP Design Criteria, Design Guides, and General Specifications Applicable to HCP and HFP

Document Number	Title
24590-WTP-3PS-PS02-T0001	Engineering Specification for Shop Fabrication of Piping
24590-WTP-3PS-SS00-T0001	Engineering Specification for Welding of Structural Carbon Steel
24590-WTP-3PS-SS00-T0002	Engineering Specification for Welding of Structural Stainless Steel and Welding of Structural Carbon Steel to Structural Stainless Steel.

4 System Description

This section summarizes design output information, describing the current design and the operational and maintenance aspects of the system. The information provided below does not contain design requirements and should not be used as design input. The description of the current design contained in this section may not fully align with design requirements. This is acceptable within the context of this document. Areas of misalignment are to be resolved through appropriate mechanisms and the SDD updated to reflect changes made to the design. Changes to the descriptive text will be made following the changes to the lower tiered Engineering documents.

4.1 Configuration Information

4.1.1 Description of System, Subsystems, and Major Components

4.1.1.1 Overview

- *Process Flow Diagram HLW Receipt & Feed Preparation - 24590-HLW-M5-V17T-00001*
- *P&ID - HLW - HLW Melter Feed Process System - 24590-HLW-M6-HFP-00001001, -00001002, -00001003, and -00001004*
- *P&ID – HLW- HLW Melter Feed Process System -- 24590-HLW-M6-HFP-00002001, -00001002, and -00001003*

The HLW Concentrate Receipt Process system (HCP) receives HLW concentrate through waste transfer lines from the Pretreatment HLW Feed Blend Vessel (HLP-VSL-00028), part of the HLW Lag Storage and Blending Process System (HLP), and directs the waste stream to the Melter Feed Preparation Vessels (MFPV) of the Melter Feed Process System (HFP). The HFP system is designed to receive, blend, sample, and transfer the waste slurry to the melter. In the MFPVs, the HLW concentrate consists of solids from ultrafiltration, strontium/transuranic (TRU) precipitate, cesium concentrate and Cs/Sr[1] capsule (future waste). The HLW concentrate and glass formers are combined to make the HLW melter feed slurry. The glass former addition is calculated using a complex algorithm that uses data from the MFPV samples for the calculation. The blended melter feed is batch-transferred from the MFPVs to the Melter Feed Vessels (MFVs), where it is continuously transferred to the HLW melters.

The HFP system consists of two melter trains, with each train serving a dedicated melter. The HLW Melter 1 is supported by MFPV (HFP-VSL-00001) and MFV (HFP-VSL-00002) as shown on Process Flow Diagram 24590-HLW-M5-V17T-00001. The HLW Melter 2 is supported by MFPV (HFP-VSL-00005) and MFV (HFP-VSL-00006) as shown on Process Flow Diagram 24590-HLW-M5-V17T-00001.

A simplified flow diagram for the HCP and HFP systems is shown in Figure 4-1.

[1] Cs/Sr waste may be added to the waste feed in the HLP of the PT Facility. A future facility for processing of the Cs/Sr capsules will need to be completed before this waste can be added to the HLW feed.

Figure 4–1 Simplified Flow Diagram for HCP and HFP System

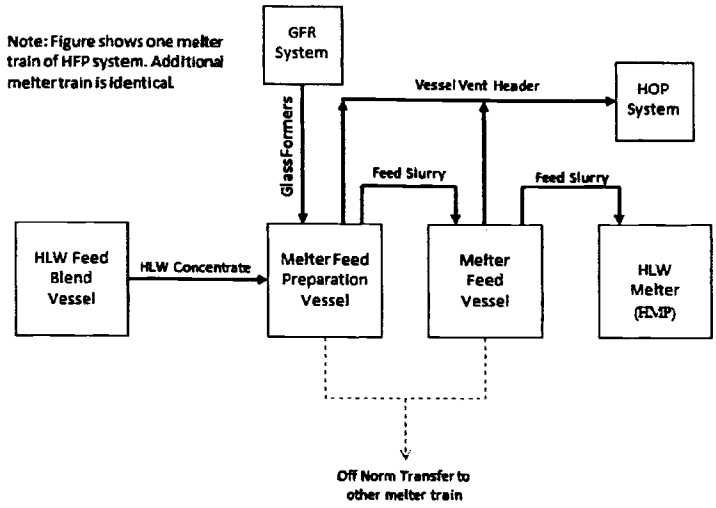

4.1.1.1.1 HLW Melter Feed Preparation

- *Process Flow Diagram HL W Receipt & Feed Preparation (System HCP, GFR, & HFP) - 24590-HLW-M5-V17T-00001,*
- *Process Information for HFP Vessels - 24590-HLW-MVC-HFP-00001*
- *DRAWING - HLW Melter 1/2 Feed Preparation Vessel Assembly Drawing - 24590-QL-POA-MVA0-00018-03-00002*
- *P&ID - HLW - HLW Melter Feed Process System Instrumentation / VENT HFP-VSL-00001 - 24590-HLW-M6-HFP-00001003*

The MFPVs (HFP-VSL-00001/00005) mix HLW concentrate with glass formers from the HLW glass former mixers (GFR-TK-00025/00031).

Each MFPV is sized based for a maximum batch volume of 5500 gallons **[3.5.1.1.2]**. Each vessel is to support one melter and is capable of supporting melter feed at the required facility production rate with one melter operating at 3.75 MTG per day **[3.4.1.1.1]**. The batch cycle time for feed preparation is 25 to 54 hours varying with waste oxide loading, HLW solids concentration and glass yield. The MFPV normally receives feed from the upstream HLW feed blend vessel (or its designated back-up vessel).

The HLW concentrates from the PT Facility are transferred to the MFPVs through four separate lines. Of the four transfer lines, two are dedicated for each melter. The waste transfer lines are designed to permit valve lineups capable of directing flow to the MFPV or the PT Facility (PWD-VSL-00043). During normal operations, waste transfer is directed to the MFPV followed by a single line volume flush into MFPV. Subsequent line flushes are directed back to the PT Facility (PWD-VSL-00043) via the other transfer line to minimize waste dilution. The primary transfer line is normally used to transfer into the MFPV; while the secondary line directs flushes back to the PT Facility (PWD-VSL-00043). In the event the primary transfer line is taken offline, the secondary line will be used with a flush connection attached in the melter cell. After each waste transfer is complete, the line is flushed by the PT HLP with plant wash fluid to prevent plugging of the transfer line. The plant wash fluid used to

flush the lines is normally Demineralized Water or process condensate provided by the plant wash racks in the PT Facility; connections on the plant wash racks allow reagents to be used to aid in cleaning the pipe [**3.6.3.1**].

Glass formers are added to the MFPV by gravity transfer from the GFR mixer [**3.5.3.2**]. The mechanical agitator blends the glass formers and waste to a degree of homogeneity. Adequate mixing helps prevent build-up of settled solids and prevents inaccurate sampling results [**3.7.1.2.1**]. The agitator has the ability to resuspend solids in the event of a loss of agitation. To assist the agitators, baffles are located internal to the vessel. For further details on the baffles, refer to section [**4.1.1.2.5**].

The air sparging system in the HFP vessels provides hydrogen mitigation capability. The design of the HFP system includes sparge tubes for hydrogen mitigation and functions as a redundant method to prevent a Design Basis Gas Release Event (DBGRE). Section [**4.1.1.2.6**] contains further details on the air sparging system.

The MFPV headspace is vented to the Process Vessel Vent Exhaust (PVV) system. The PVV system is capable of maintaining a negative headspace despite air leakage into the vessels from various sources. Vented air from the vessel headspace must first travel through a demister to reduce particulate and aerosols. Following passage through the demister, the remaining air vents to the PVV system.

If melter feed in the MFPV is determined unsatisfactory for progression to the MFV due to sampling results, the batch is adjusted with the glass formers to allow processing. If the required addition of glass formers exceeds the volume of the MFPV, then transfer between the melter trains is allowed [**3.4.4.2**]. The steam ejectors are only permitted for transfer of HLW concentrate during vessel decommissioning [**3.5.3.8**].

The MFPVs are equipped with the following:

- Mechanical agitator [**3.7.1.2.1**]
- Air spargers for forced air purging of vessel head space and secondary agitation mechanism (on hold pending changes from SDS) [**3.10.1.3.2**]
- Air amplifier for Safety ventilation of the HFP head space [**3.11.2.1.1, 3.11.2.1.2**]
- Two mechanical pumps to transfer waste to the HLW MFV and the auto sampler [3.4.1.1.3]
- Demister on the vessel vent line for de-entrainment [**3.11.1.1**]
- Instrumentation for level, density and pressure measurement [**3.10.1.1.2, 3.10.1.1.3**]
- Thermocouple for temperature measurement [**3.10.1.1.1**]
- Cooling jacket to remove radioactive decay heat and heat generated by the agitator [**3.5.1.1.3**]
- Internal fixed nozzles for periodic wash-down [**3.5.4.1**]
- Steam ejector for transfer to the PWD vessel (RLD-VSL-00008) [**3.5.3.8**]
- Overflow path, equipped with flapper valve to prevent air in-leakage [**3.5.2.1.1, 3.5.2.1.2**]
- Internal baffles [**3.5.2.2**]

The MFPVs are equipped with two forms of detection; radar level detection as well as 'bubbler' style (differential pressure) density compensated level detection. Samples are taken from the MFPV via the ASX sample cabinets and are analyzed by the Analytical Labratory. To ensure a good sample flow detection is included on the sample line. High average velocity ensures a turbulent fluid stream and characteristic sample properties. The level and sample data are used in the glass former algorithm. [**3.5.3.9**]

Each MFPV is equipped with two cantilever pumps for transfer through the ASX recirculation loop or to the corresponding MFV. Jumpers are available to allow transfer of feed to the redundant melter train. [**3.4.4.2**]

The HLW MFPVs are located in the melter cave. Removal and replacement of the vessel and its components is conducted remotely by the HLW Melter Cave Support Handling (HSH) System [**3.4.4.1**]. Due to the abrasive and corrosive nature of the feed slurry, the agitator and pumps will need to be replaced within the lifetime of the plant [**3.4.1.2.1**].

Figure 4-2 depicts the major subcomponents within the MFPV and MFV.

Figure 4–2 Overhead View of MFPV and MFV

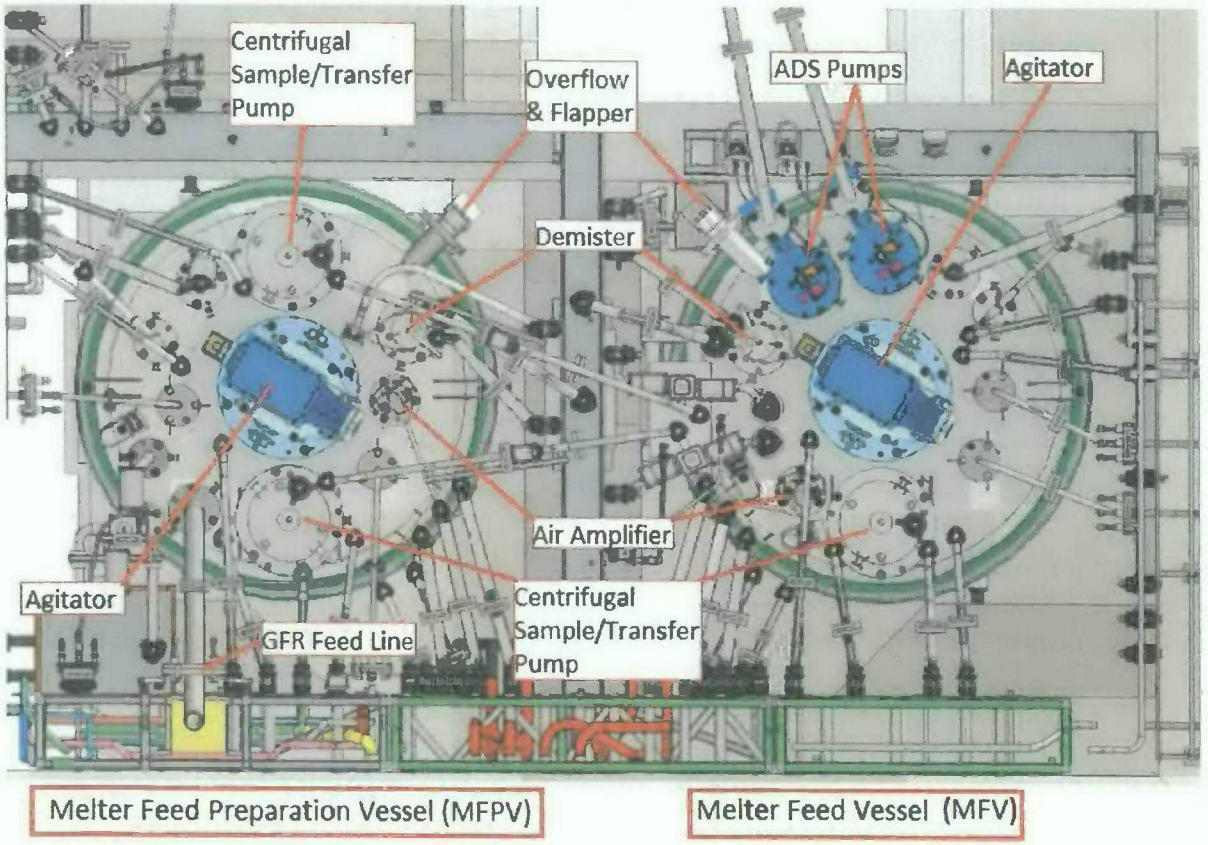

4.1.1.1.2 HLW Glass Former Feed

- *HLW Melter Feed and Feed Preparation Vessel Utilization and Time CYCLE Evaluation - 24591-HLW-ES-PR-04-001*

The GFR mixers feed the glass formers determined by the glass former algorithm to the MFPV. The glass formers are mixed thoroughly with demineralized water (DIW) in the GFR mixers for dust mitigation purposes. The target water addition is approximately 5 % of the glass formers batch weight. The GFR system controls the discharge rate of wetted glass formers into the feed chute to the MFPV [**3.5.3.2**]. The boundary of the HFP system is at the GFR isolation valve.

In the MFPVs, the blended glass formers are mixed with the HLW concentrate to facilitate sampling. In order to prevent hydrogen buildup in the GFR addition line to the MFPV, there is an air purge line which ties into the GFR addition line following the GFR isolation valve [**3.5.3.12**]. The pressure difference between the feed hopper and the MFPV ensures airflow is cascading from a C3 to C5 zone.

4.1.1.1.3 HLW Melter Feed

- *Process Flow Diagram HL W Receipt & Feed Preparation (System HCP, GFR, & HFP) - 24590-HLW-M5-V17T-00001*
- *P&ID - HLW HLW Melter Feed Process System Melter Feed Vessel HFP-VSL-00002 - 24590-HLW-M6-HFP-00002001*
- *Mechanical Systems Data Sheet: Mechanical Agitator - 24590-HLW-MFD-HFP-00003*
- *HLW Vitrification Building General Arrangement Plan AT EL 0'-0" - 24590-HLW-P1-P01T-00002*

The HLW MFVs (HFP-VSL-00002/00006) receive blended melter feed, consisting of HLW concentrate and glass formers, from the HLW MFPVs. The batch cycle time for melter feed varies from 40 to 90 hours. The duration of the batch cycle times vary with the waste oxide loading, HLW solids concentration and glass yield.

The mechanical agitator in the MFV is capable of maintaining a homogeneous melter feed slurry to ensure the final product meets qualification requirements. Although the MFVs are not sampled during normal operations, they each have the capability to be sampled if required [**3.5.3.9**]. The mechanical agitator also ensures solids will be sufficiently disturbed to release entrained hydrogen from the vessel contents at a steady rate. To assist the agitator, baffles are located internal to the vessel. For further details on the baffles, refer to Section [**4.1.1.2.5**]. In Addition, spargers are located in the vessel to introduce air to the system and help mitigate the possibility of hydrogen buildup. For further details on the spargers, refer to Section [**4.1.1.2.6**].

The MFVs are equipped with the following:

- Mechanical agitator [**3.7.1.2.1**]
- Air spargers for purging hydrogen from vessel head space and agitation [**3.10.1.3**]
- Air amplifier for Safety ventilation of the HFP head space [**3.11.2.1**]
- ADS transfer pumps [**3.9.1.2**]
- Demister on the vessel vent line for de-entrainment [**3.11.1.1**]
- Instrumentation for level, pressure, and density measurement [**3.10.1.1.2, 3.10.1.1.3**]
- Thermowell for temperature measurement [**3.10.1.1.1**]
- Cooling water jacket to remove radioactive decay heat and heat dissipated from agitation [**3.5.1.1.3**]
- Internal fixed nozzles for periodic wash-down [**3.5.3.5, 3.5.4.1**]
- Steam ejector for transfer to the plant wash and drains vessel (RLD-VSL-00008) [**3.5.3.8**]
- Overflow path, equipped with flapper valve to prevent air in-leakage [**3.5.2.1.1, 3.5.2.1.2**]
- Sample pump to transfer waste to auto sampler
- Internal baffles [**3.5.2.2**]

Each MFV is equipped with two ADS pumps for transfer to the melter; both pumps are needed to operate the melter. Although sampling in the MFV is infrequent, each vessel is also equipped with a cantilever pump to support sampling. The MFV design accommodates sampling but the centrifugal MFV sampling pump is not normally installed due to probability of plugging from infrequent use. Remote installation is required for installation of sampling capability.

The HLW MFVs are located in the melter cave. Removal and replacement of the vessel and its components is conducted remotely by the HLW Melter Cave Support Handling (HSH) System [**3.4.4.1**]. Due to the abrasive and

corrosive nature of the feed slurry, the agitator and pumps are anticipated to require replacement within the lifetime of the plant [**3.4.1.2.1**].

4.1.1.1.4 Vessel Ventilation

Each HFP vessel is equipped with a demister on the associated vent nozzle, which discharges into the PVV [**3.11.1.1**]. Prior to entering the PVV, the air passes from the vessel headspace into a demister. The demisters de-entrain the aerosols from the off-gases and purge air; the liquids and solids will be cleaned from the demister periodically using demineralized water and reagents as required, supplied to an internal wash ring provided above the demister packing. The ventilation serves as a form of protection to prevent accumulation of flammable gases that could result in a release of chemical or radiological material. The ventilation system maintains a negative pressure in the HFP vessels relative to other lower radiation/contamination zones so that in the event of a flow path forming, the direction of flow will be into the HFP vessel and then into the PVV.

During off-normal events such as loss of mixing or loss of vessel ventilation the vessels are equipped with air amplifiers to provide ventilation and maintain vessel headspace at negative pressure. The volume of air that can be drawn by the air amplifiers is sufficient to maintain vessel headspace at negative pressure during full sparging [**3.11.2.1.1**]. Air amplifiers, demisters, and demister packing are designed to be remotely removable and replaceable to accommodate 40 years of facility operation [**3.4.1.2.1**].

To maintain vessel headspace volume and prevent over pressurization due to excess liquids or gasses during an off-normal event, each HFP vessel is equipped with an overflow line and flapper valve to allow overflow to the melter sumps. The overflow mechanism is designed for the maximum in-flow rate of the vessels [**3.5.2.1.3**]. The overflow line includes a flapper valve which opens upon loss of negative headspace pressure, providing a backup vent path. This valve has been designed so that it does not fully seat when closed to prevent accumulation of solids [**3.5.2.1.2**]. The overflow line is directed towards the top of the melter cell sumps. The sumps, after appropriate jumper routing, transfer recovered spilled material to the opposite train's MFPV [**3.4.4.6**].

4.1.1.2 Components

In-Cave pipe work and vessels that are non-maintainable are fully welded [**3.6.1.1.2**]. HFP/HCP equipment is constructed of material resistant to radiation, process solutions, and decontamination agents. Selection of materials of construction addresses the in-cave chemical, radiological, and thermal environment to minimize maintenance requirements [**3.4.1.2.2**]. In-cell/cave equipment is simplified and minimized wherever practicable to improve reliability, operability, maintainability, and to minimize waste generated from disposal and decontamination. Maintainable equipment within the caves is designed for remote maintenance or to be recovered remotely by external means to a maintenance area [**3.4.4.1**]. Process piping in the HFP is designed to be free-draining with no traps/seals and vents/drains where appropriate to facilitate drainage [**3.6.4.1**]. Isolation and test points with drain/bleed valves shall be included in the design to allow for removal, replacement, and testing of plant items required during normal operations.

4.1.1.2.1 Air Displacement Slurry Pumps (HFP-PMP- /-00002/00014/00015)

- *Process Flow Diagram HL W Receipt & Feed Preparation (System HCP, GFR, & HFP) - 24590-HLW-M5-V17T-00001*

The ADS pumps are used in the MFVs for transfer to the melter. The ADS pump type has been selected because it has self-clearing capabilities each stroke via an air flush. The driving force is compressed air from the ISA system, which acts to push the slurry using a pulsed flow and clears the feed lines at the same time [**3.9.1.2, 3.9.3.2.1**].

The ADS pump controls allow for a water flush cycle once every two to four hours during normal feeding operations. In addition, a flush cycle begins immediately before feeding starts from an idle condition and immediately after a pump shutdown condition to prevent feed line blockage. The flush water is sent to the melter. [**3.9.1.1.1, 3.9.3.1.1**]

The ADS pumps have a design life of greater than 5 years with normal periodic maintenance [**3.4.1.2.1**].

4.1.1.2.2 Cantilever Pumps (HFP-PMP-00005A/B / HFP-PMP-00018A/B / HFP-PMP-00007 /HFP-PMP-00017)

- *DRAWING - HLW Melter 1/2 Feed Preparation Vessel Assembly Drawing - 24590-QL-POA-MVA0-00018-03-00002*
- *Mechanical Systems Data Sheet; Vertical Centrifugal Pump - 24590-HLW-MPD-HFP-00007*
- *P&ID - HLW - HLW Melter Feed Process Sys Process System Sample/Transfer Pumps HFP-PMP-00005A/B - 24590-HLW-M6-HFP-00001002*

The HFP vessels are equipped with vertical centrifugal pumps for process fluid transfer and sampling. The MFPV cantilever pumps are used for both transfer and sampling functions while the MFV cantilever pump is only used for sampling. The MFPV and MFV cantilever pumps offer the capability to transfer melter feed to the opposite train through the respective sample loop. These pumps are mounted to the HFP vessels with bolted flanges and take suction from the bottom of the vessels. A priming line that connects at the suction entrance will prime the pump for pump start-up. The impeller and casing sit inside the vessel head. If the pump seals fail, the only path for waste is back into the vessel; thus preventing the vessel's liquids or gases from affecting personnel or the environment.

Each MFPV has two cantilever pumps for transfer to the MFV [**3.4.1.1.1**]. The MFPV transfer pumps also provide the ability to sample by recirculating the slurry through the ASX sampler and back into their respective vessel [**3.4.1.1.3**]. Each MFV has a dedicated cantilever pump (HFP-PMP-00007/00017) for sampling, which also has the ability to circulate through the ASX sampler and back into its respective vessel. The MFV sampling pumps are not installed during normal operations, but they can be remotely installed when needed. The pumps are not normally installed toprevent plugs in the pump suction and priming lines due to long idle periods. Flushing of the transfer/sampling lines from these pumps is performed by flush connections in the ASX samplers. Flush connections have check and isolation valves to prevent back flow of process fluid into the utility system. [**3.9.1.1.1**]

The vertical centrifugal pumps are designed for a minimum service life of not less than 20 years (when subject to periodic maintenance) and an exposure life of 5 years (with no maintenance required in that period) [**3.4.1.2.1**].

4.1.1.2.3 Steam Ejectors (HFP-EJCTR-00001 and HFP-EJCTR-00002 / HFP-EJCTR-00005 and HFP-EJCTR-00004)

- *Process Flow Diagram HL W Receipt & Feed Preparation (System HCP, GFR, & HFP) - 24590-HLW-M5-V17T-00001*

The MFPVs and MFVs are both equipped with steam ejectors to assist in vessel decontamination and decommissioning (D&D). The steam ejectors will provide a route to the Plant Wash and Drains Vessel (RLD-VSL-00008) when the affected HFP vessel must be decommissioned. Steam ejectors are neither installed nor shall the steam supply be connected to the steam racks until required to support vessel D&D. This will prevent non-Newtonian waste from entering the RLD system. In order for the steam ejector to achieve the required lift, the vessel contents will require dilution with demineralized water because of the high solids content in the feed slurry [**3.4.4.4**].

4.1.1.2.4 Cooling Jackets

- *Process Flow Diagram HL W Receipt & Feed Preparation (System HCP, GFR, & HFP) - 24590-HLW-M5-V17T-00001*

The HFP vessels are equipped with cooling jackets. The cooling jackets are supplied with cooling water from the Plant Cooling Water (PCW) System in BOF. The PCW system is designed to provide adequate cooling for each HFP vessel to remove heat from mechanical agitation and radioactive decay. [**3.5.1.1.3**]

4.1.1.2.5 Mechanical Agitators

- *Process Flow Diagram HL W Receipt & Feed Preparation (System HCP, GFR, & HFP) - 24590-HLW-M5-V17T-00001*
- *Mechanical Systems Data Sheet; Mechanical Agitator - 24590-HLW-MFD-HFP-00013*

Both the MFPVs and MFVs utilize Mechanical Agitators to mix the HFP concentrate and glass formers to keep the solids in suspension [**3.7.1.2.1**]. The agitator also ensures the solids will be sufficiently disturbed to release entrained hydrogen from the vessel contents at a steady rate. The agitator is rotated by a variable speed drive motor and continuously operated. The agitator assemblies have speed sensors and current detectors for safety purposes to identify when the agitator fails [**3.10.1.2.1**]. The adjustable speed drive is utilized to vary the degree of mixing. Prior to sampling or processing forward melter feed, the agitator speed is increased to ensure a homogeneous mixture. During phases where the vessels are neither sampling nor transferring, the rate of agitator rotation is reduced such that erosion is reduced while keeping solids in suspension. The agitators for the MFPV vessels have WAI requirements to provide agitation sufficient to produce a homogenous mixture for sampling purposes. This WAI requirement is met by design configuration of the impellers and shaft assembly [**3.7.1.1**]. The MFPV speed sensors are calibrated to meet WAI requirements for verifying appropriate rotational speed needed to guarantee homogeneity.

The MFPVs and MPVs are equipped with four baffles placed around the vessel internal perimeter. These baffles are supported in four points along their height off the vessel wall and have a gap between the vessel wall and the baffle. This arrangement enhances the mixing of the agitator and minimizes the coning effect of the operation of the agitator. The dimensions and placement of these baffles, as well as the rest of the internal geometry in the vessels, are WAI because the baffles and vessel internals influence the effectiveness of the mixing required to obtain representative samples.[**3.5.2.2**].

4.1.1.2.6 Sparge Tubes

- *DRAWING - HLW Melter 1/2 Feed Preparation Vessel Assembly Drawing - 24590-QL-POA-MVA0-00018-03-00002*

The air sparging system in the HFP vessels provides hydrogen mitigation capability. Current design of the HFP system includes sparge tubes for hydrogen mitigation and a redundant method to prevent a Design Basis Gas Release Event (DBGRE). The SDS identifies the sparge tube design as removed and references development of alternate methods of performing these functions. Pending development of these alternate methods and their incorporation into the design basis documents, the requirements for air sparging are on hold [**3.10.1.3.2**].

There will be eight spargers radially located around the vessel. In the current design, the air sparge tubes provide a forced airflow during normal operations with the agitator running to ensure there will not be a slow buildup of hydrogen in the vessel headspace above the Lower Flammability Limit (LFL) [**3.8.2.1**]. During Design Basis Events resulting in agitator failure, the sparge tube airflow is increased to disturb the sediment layer formed by the settling solids and allow the hydrogen trapped by this layer to be released prior to reaching the LFL or a gas concentration sufficient to induce a cascade bubble release [**3.8.3.2**]. During the safety sparge mode, the spargers flow rate will be increased approximately once per day for one hour, returning to normal operating flow after that hour. The sparge air is vented from the vessel into the Process Vessel Vent Exhaust (PVV) system except when the sparging is activated by the seismic signal. When activated by the seismic signal, the air amplifiers mounted

on the vessel head also activate ejecting the headspace air into the C5 melter cell to prevent over pressurization of the vessel. The air supply piping and valves within the air sparging system are designed as Safety Class components [**3.4.2.1**].

4.1.1.2.7 Steam Racks

- *P&ID - HLW - HLW Melter Feed Process System Sparge Rack Utility Supplies - 24590-HLW-M6-HFP-00010001*

The steam racks in the HFP and HCP feed high-pressure steam to ejectors in the RLD, HSH, and HFP systems. Steam is supplied by the HPS. Steam will not be attached to the steam supply piping until decommissioning. The ISA provides pressurized air used to purge steam lines following a steam transfer to prevent a steam collapse, which would result in backflow of contamination.

4.1.2 Boundaries and Interfaces

- *Process Flow Diagram HL W Receipt & Feed Preparation (System HCP, GFR, & HFP) - 24590-HLW-M5-V17T-00001*

The major interfaces with the HFP system are the HLW Concentrate Receipt Process System (HCP), HLW Melter Process System (HMP), and Glass Former Reagent (GFR) System. The Melter Feed Preparation Vessels receive HLW concentrate from the Pretreatment HLP system through the HCP system. The boundary of the HCP system is at the wall of the melter cave. The HFP boundary limit with the GFR system is at the isolation valve downstream of the HLW Glass Former Mixer on the discharge line to the MFPV. From the Melter Feed Vessel, HLW feed slurry is transferred to the HMP system. The boundary limit with the HMP system is at the melter nozzle. The boundaries for manually operated processes are at the wallbox. The boundaries for controlled processes are at the control valve. Agitators and pumps receive their power from the motor control centers. Power for the instrumentation and control systems will be from the plant Safety Uninterruptible Power Electrical System (UPS). Safety Power for the agitators is supplied by the stand by diesel generators. The HFP vessels and vessel equipment can be remotely removed and replaced by the mechanical handling equipment in the melter cave. The radioactive solid waste handling (RWH) system equipment and processes are used to change out the HFP pumps, agitators, and other miscellaneous equipment. **[3.5.3.1, 3.5.3.2, 3.5.3.3, 3.5.3.4]**

4.1.2.1 Interfacing Systems

Table 4–1 System Interfaces

System Locator	System Name	Nature of Interface
ASX	Autosampling System	Sampling is performed to characterize the batch waste. [3.5.3.9]
C5V	C5 Ventilation System	During off-normal events, provides ventilation of the melter cave to remove headspace gas vented by the HFP vessel air amplifiers or overflow features when the HOP/PVV is unavailable.
DIW	Demineralized Water System	Demineralized water is supplied for vessel washing; and to flush the Transfer and ADS pumps. [3.5.3.5]
GFR	Glass Formers Reagent System	The GFR Feed Hopper delivers blended glass formers to the HFP system vessels.
HCP	HLW Concentrate Receipt Process System	Supplies HLW concentrate to MFPVs from PT HLP.

Table 4–1 System Interfaces

System Locator	System Name	Nature of Interface
HFP	HLW Melter Feed Process System	Receives feed concentrate from HCP.
HLP	HLP Lag Storage and Feed Blending System	Transfers HLW concentrate from the PT Facility to the HFP of the HLW.
HMP	HLW Melter Process System	Receives blended HLW feed from the MFVs.
HOP	HLW Primary Offgas System	Negative headspace pressure is maintained in the HFP vessels by the PVV and HOP systems.
HPS	High Pressure Steam System	Supplies steam to the steam ejectors in the HFP vessels and sump.
HSH	Melter Cave Support Handling System	Facilitates change out of all HFP equipment and maintenance within the melter caves.
ISA/ Safety ISA	Instrument Service Air System	The safety ISA provides air for vessel sparging/purging, GFR line purging, air supply to the air amplifiers (when activated), as well as motive force to operate pneumatically operated safety valves. The non-safety ISA supplies instrument air to non-safety HFP instruments, control valves, and ADS pumps.
LVE	Low Voltage Electrical System	Supplies electrical power for normal operation of pumps and agitators.
NAR	Nitric Acid Reagent System	Supplies 0.5M and 2M nitric acid for decontamination activities.
PCJ	Process Control System	Monitor and basic process control.
PCW	Plant Cooling Water System	Supplies cooling water to the HFP vessel cooling jackets. [3.5.3.6.1]
PPJ	Programmable Protection System	Monitor and safety control.
PVV	Process Vessel Vent Exhaust System	Maintains a negative pressure in the HFP vessels and vents the vessel off-gas to the melter off-gas treatment process system (HOP). [3.5.3.7.1]
PWD	Plant Wash and Disposal System	Supplies demineralized water to HFP vessels for washdowns, concentrate dilution, to prime sample/transfer pumps. The PT Facility vessel PWD-VSL-00043 receives flush water from the HLW concentrate transfer line from PT HLP to MFPV.
RLD	Radioactive Liquid Waste Disposal System	Receives HFP vessel wash effluent during decommissioning and recycles back to teh PT facility.
UPE	Uninterruptible Power Electrical System	Supplies back-up power for Safety SSCs requiring electrical power.

4.1.3 Physical Layout and Location

- *HLW Vitrification Building General Arrangement Plan AT EL 0'-0" - 24590-HLW-P1-P01T-00002*
- *HLW Vitrification Building General Arrangement Plan AT EL 58'-0" - 24590-HLW-P1-P01T-00005*

The majority of the HFP process equipment is primarily housed in the melter caves 1 (H-0117) and 2 (H-0106) which starts at elevation 0 ft and extends up through elevation +14 ft. The melter cells are classified as C5/R5 zones within the HLW Facility. Primary containment for waste is the process vessels, piping, and vessel ventilation; the secondary containment for waste is the cell, the cell liners, and sumps. Equipment manipulated by operations located in the melter caves is normally remotely performed in the HLW main control room. Equipment is laid out and valved such that when maintenance needs to be performed, minimum nominal amount of other components/systems are impacted. Melter caves 1 and 2 are equipped with wash rings used for cell decontamination, if required. Process and utility piping shall have a means to prevent or mitigate cross contamination. Demineralized water and other reagents can be attached to the wash racks for use in decontamination and maintenance activities. The utility racks and control racks for the HCP and HFP are located on elevation 58 ft,in rooms H-424 and H-426. These rooms are designated as C2/C3/R2 zones. The radioactive solid waste handling system (RWH) mechanical handling components are relied on for maintenance and replacement activities of process equipment. The maintainable equipment is constructed to be removable using HSH remote mechanical handling equipment. Cell contamination level is indicated on general arrangement drawings. In-cave equipment is designed to minimize contamination and have features to aid in decontamination. All equipment and cells that house them are designed to withstand the chemical properties of the waste and the decontamination process. The figure 4-3 shows a simplified plan view of the HLW Facility.

Figure 4–3 HLW Facility Plan at Elevation 0 ft

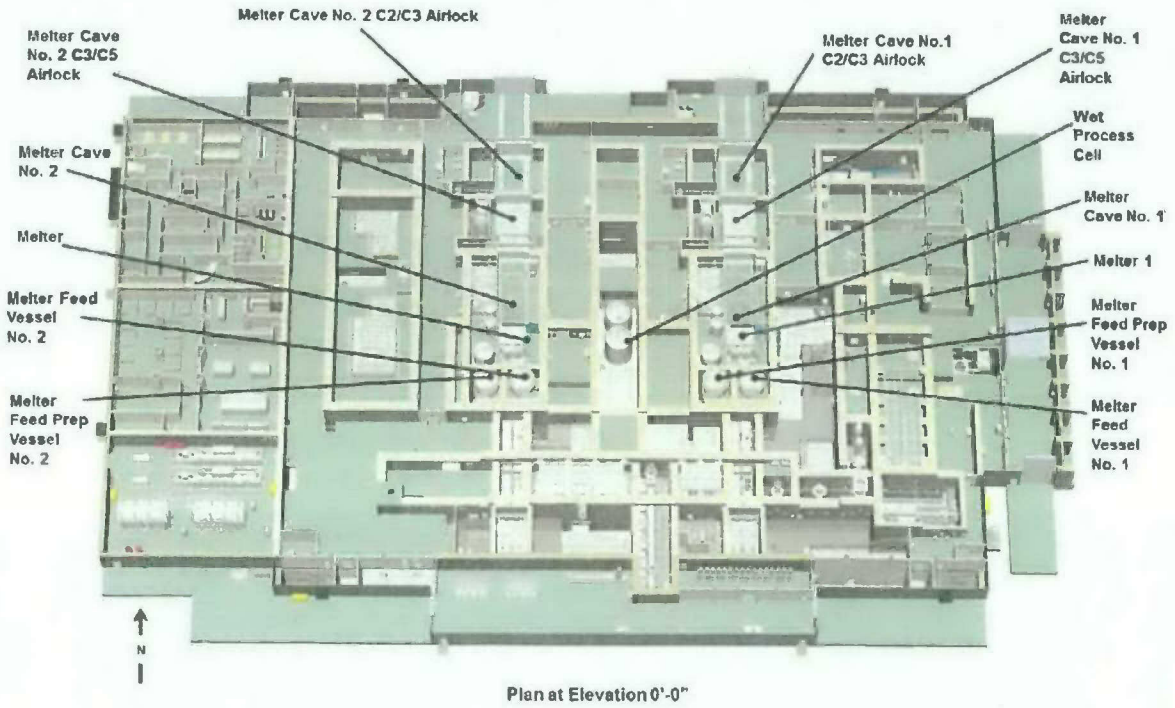

4.1.4 Principles of Operation

The HLW Concentrate Receipt Process system receives HLW concentrate through waste transfer lines from the PT HLW feed blend vessel (HLP-VSL-00028) of the HLW Lag Storage and Blending Process System (HLP), and transfers the waste to Melter Feed Preparation Vessels (MFPV) of the HFP system. The HLW concentrates from PT are transferred to the MFPVs through four separate lines. Of the four transfer lines, two are dedicated for each melter. The HFP system receives, blends, samples, and transfers the waste slurry to the melter. In the MFPV (HFP-VSL-00001/00005), HLW concentrate (solids from ultrafiltration, strontium/transuranic (TRU) precipitate, cesium concentrate and Cs/Sr capsule (future waste)) and glass formers are combined to make HLW melter feed slurry. The required amount of glass former addition is calculated based upon the samples recovered from the system.. Glass formers are added to the MFPV by gravity transfer. The blended melter feed is then batch-transferred to the MFV (HFP-VSL-00002/00006), where it is continuously transferred to the HLW melters. Each vessel is equipped with two air displacement slurry pumps for transfer to the melter; both pumps are needed to operate the melter. Although sampling in the MFV is infrequent, the vessel is equipped with a cantilever pump for sampling. If melter feed in the MFPV is determined unsatisfactory for progression to the MFV due to sampling results, the batch is adjusted with the glass formers to allow processing. If the required addition of glass formers exceeds the volume of the MFPV, then transfer between the melter trains is allowed.

During normal operations waste transfer is directed to the MFPV, followed by a single line volume of flush into MFPV. Subsequent line flushes are directed back to the PT Facility (PWD-VSL-00043) via the other transfer line to minimize waste dilution.

The HLW melter feed process system consists of two trains with each train serving a dedicated melter. Each HFP train consists of a HLW Glass Former Mixer, a Melter Feed Preparation Vessel, a Melter Feed Vessel, and associated equipment.

Additional discussion of system operations is provided in Section 4.2.

4.1.5 System Reliability Features

RESERVED

4.1.6 System Control Features

The PPJ and PCJ system is a plant-wide system for monitoring and control of the process, ventilation, and services within the PT, HLW, and LAW facilities. The PPJ and PCJ are an integral part of the Integrated Control Network and provides the following functions:

- Monitoring of independent protection trips
- Device interlocks

The PPJ and PCJ also provide startup initiation, status monitoring, and shutdown initiation of independently controlled services and utilities. This allows remote operation of the equipment located in-cave/cell.

The MFPVs, MFVs, and ASD control racks are equipped with instrumentation. The data is collected by the sensing elements, which are located in the vessels and control racks. The signals are sent to the transmitters, which are located in instrument racks on elevation 37 ft. The primary control location for HLW Facility will be the control room (H-A201) located at elevation +14 ft of the HLW building. In-cell operations is operated remotely from this room.

4.1.6.1 System Monitoring

This Section is on hold pending C&I determination of Packaged Equipment control requirements and Complex Control Schemes.

4.1.6.2 Control Capability and Locations

Control capability and locations will be identified in a configuration data index (CDI) (24590-HLW-JDX-HFP-0001 future) which will be provided by C&I at a later date.

4.1.6.3 Automatic and Manual Actions

The table below identifies the manual actions for the HLW HFP System:

Table 4–2 Manual Actions for the HLW HFP System

Equipment No.	Instrument No.	Function	Remarks
HFP-VSL-00001 (Melter 1 Feed Preperation Vessel)	HFP-HK-0051B	Operator Adjusted Setpoint for HFP-VSL-00001 Feed Batch Volume (HFP-LT-0051)	
HFP-PMP-00005A	HFP-HK-0113	Operator Adjusted Set point for HFP-PMP-00005A Totalized Flow (HFP-FT-0113)	
	HFP-HC-0037	Controls pump HFP-PMP-00005A by Varying Pump Speed	
HFP-PMP-00005B	HFP-HK-0114	Operator Adjusted Setpoint for HFP-PMP-00005B Totalized Flow (HFP-FT-0114)	
	HFP-HC-0038	Controls pump HFP-PMP-00005B by Varying Pump Speed	
HFP-PMP-00007	HFP-HC-0042	Controls pump HFP-PMP-00007 by Varying Pump Speed	
HFP-AGT-00001	HFP-HC-0011	Controls HFP-AGT-00001 by Varying Agitator Speed	
HFP-AGT-00002	HFP-HC-0018	Controls HFP-AGT-00002 by Varying Agitator Speed	
HFP-VSL-00005 (Melter 2 Feed Preparation Vessel)	HFP-HK-2051B	Operator Adjusted Setpoint for HFP-VSL-00005 Feed Batch Volume (HFP-LT-2051)	
HFP-PMP-00018A	HFP-HK-2113	Operator Adjusted Setpoint for HFP-PMP-00018A Totalized Flow (HFP-FT-2113)	

Table 4–2 Manual Actions for the HLW HFP System			
	HFP-HC-2037	Controls pump HFP-PMP-00018A by Varying Pump Speed	
HFP-PMP-00018B	HFP-HK-2114	Operator Adjusted Setpoint for HFP-PMP-00018B Totalized Flow (HFP-FT-2114)	
	HFP-HC-2038	Controls pump HFP-PMP-00018B by Varying Pump Speed	
HFP-PMP-00017	HFP-HC-2042	Controls pump HFP-PMP-00017 by Varying Pump Speed	
HFP-AGT-00004	HFP-HC-2011	Controls HFP-AGT-00004 by Varying Agitator Speed	
HFP-AGT-00005	HFP-HC-2018	Controls HFP-AGT-00005 by Varying Agitator Speed	

The table below identifies the automatic actions for the HLW HFP System:

Table 4–3 Automatic Actions for the HLW HFP System				
Equipment No.	**Instrument** No.	**Properties**	**Function**	**Remarks**
HFP-VSL-00001 (Melter 1 Feed Preparation Vessel)	HFP-YC-0105Ai		Opens and Closes valve HFP-YV-0105, Glass Former Addition Valve via HFP- YY-0105A	On Hold Pending Development of Glass Former Addition
	HFP-YC-0105B	SC	Opens and Closes valve HFP-YV-0105, Glass Former Addition Valve via HFP- YY-0105B	On Hold Pending Development of Glass Former Addition
	HFP-YC-0105C	SC	Opens and Closes valve HFP-YV-0105, Glass Former Addition Valve via HFP- YY-0105C	On Hold Pending Development of Glass Former Addition
	HFP-YC-0102		Opens and Closes valve HFP-YV-0102, Demister Flush Valve	

Table 4–3 Automatic Actions for the HLW HFP System

	HFP-YC-0103A		Opens and Closes valve HFP-YV-0103, HFP-VSL-00001 Pretreatment Isolation Valve, via HFP-YY-0103A	
	HFP-YC-0103B	SC	Opens and Closes valve HFP-YV-0103, HFP-VSL-00001 Pretreatment Isolation Valve, via HFP-YY-0103B	
	HFP-YC-0049		Opens and Closes valve HFP-YV-0049,	
	HFP-HS-0049A		Starts and Stops HFP-EJCTR-00001 Operating Sequence	
	HFP-YC-0923		Opens and Closes HFP-YV-0923, HFP- RK.-00016 Sparge Tube Flush Valve	
	HFP-YC-0929	SC	Opens and Closes HFP-YV-0929, HFP-RK.-00016 Sparge Tube Flush Valve	
	HFP-YC-0930	SC	Opens and Closes HFP-YV-0930, HFP-RK.-00016 Sparge Tube Flush Valve	
	HFP-YC-0925	SC	Opens and Closes HFP-YV-0925, Air Amplifier Supply Valve	
	HFP-YC-0928	SC	Opens and Closes HFP-YV-0928, Air Amplifier Supply Valve	
	HFP-YC-0903	SC	Opens and Closes HFP-YV-0903, Air Sparging Valve	
HFP-VSL-00001 (Melter 1 Feed Preparation Vessel)	HFP-YC-0904	SC	Opens and Closes HFP-YV-0904, Air Sparging Valve	
	HFP-YC-0931	SC	Opens and Closes HFP-YV-0931, Safety Air Crossover Valve	
	HFP-YC-0932	SC	Opens and Closes HFP-YV-0932, Safety Air Crossover Valve	

Table 4–3 Automatic Actions for the HLW HFP System				
HFP-PMP-00005A (Melter 1 Feed Preparation Vessel Sample/Transfer Pump)	HFP-HS-0115		Pump HFP-PMP-00005A Priming Sequence Start Switch	
	HFP-YC-0037		Starts and Stops HFP-PMP-00005A	
	HFP-YC-0106A	SC	Starts and Stops HFP-PMP-00005A via HFP-JY-0106A	
	HFP-YC-0106B	SC	Starts and Stops HFP-PMP-00005A via HFP-JY-0106B	
	HFP-YC-0002		Opens and Closes valve HFP-YV-0002, HFP-PMP-00005A Priming Valve	
	HFP-YC-0039		Opens and Closes Valve HFP-YV-0039, HFP-PMP-00005A Flow Path Control Valve	
HFP-PMP-00005B (Melter 1 Feed Preparation Vessel Sample/Transfer Pump)	HFP-HS-0116		Pump HFP-PMP-00005B Priming Sequence Start Switch	
	HFP-YC-0038		Starts and Stops HFP-PMP-00005B	
	HFP-YC-0107A	SC	Starts and Stops HFP-PMP-00005B via HFP-JY-0107A	
	HFP-YC-0107B	SC	Starts and Stops HFP-PMP-00005B via HFP-JY-0107B	
	HFP-YC-0003		Opens and Closes valve HFP-YV-0003, HFP-PMP-00005B Priming Valve	
	HFP-YC-0040		Opens and Closes valve HFP-YV-0040, HFP-PMP-00005B Flow Path Control Valve	
HFP-VSL-00002 (Melter 1 Feed Vessel)	HFP-YC-0024		Opens and Closes valve HFP-YV-0024, Demister Flush Valve	
	HFP-YC-0033		Opens and Closes valve HFP-YV-0033, HFP-EJCTR-00002 Ejector Valve	

Table 4–3 Automatic Actions for the HLW HFP System

	HFP-YC-0013A	SC	Opens and Closes valve HFP-YV-0013A, bubbler Air/Water Supply Valve	
	HFP-YC-0013B	SC	Opens and Closes valve HFP-YV-0013B, bubbler Air/Water Supply Valve	
HFP-VSL-00002 (Melter 1 Feed Vessel)	HFP-HS-0033A		Starts and Stops HFP-EJCTR-00002 Operating Sequence	
	HFP-YC-1023		Opens and Closes HFP-YV-1023, HFP-RK-00017 Sparge Tube Flush Valve	
	HFP-YC-1029	SC	Opens and Closes HFP-YV-1029, HFP- RK-00017 Sparge Tube Flush Valve	
	HFP-YC-1030	SC	Opens and Closes HFP-YV-1030, HFP-RK-00017 Sparge Tube Flush Valve	
	HFP-YC-1025	SC	Opens and Closes HFP-YV-1025, Air Amplifier Supply Valve	
	HFP-YC-1028	SC	Opens and Closes HFP-YV-1028, Air Amplifier Supply Valve	
	HFP-YC-1003	SC	Opens and Closes HFP-YV-1003, Air Sparging Valve	
	HFP-YC-1004	SC	Opens and Closes HFP-YV-1004, Air Sparging Valve	
	HFP-YC-1031	SC	Opens and Closes HFP-YV-1031, Safety Air Crossover Valve	
	HFP-YC-1032	SC	Opens and Closes HFP-YV-1032, Safety Air Crossover Valve	
HFP-PMP-00007 (Melter 1 Feed Vessel Sample Pump)	HFP-HS-0117		Pump HFP-PMP-00007 Priming Sequence Start Switch	
	HFP-YC-0042		Starts and Stops HFP-PMP-00007	

Table 4–3 Automatic Actions for the HLW HFP System

	HFP-YC-0203A	SC	Starts and Stops HFP-PMP-00007 via HFP-JY-0203A	
	HFP-YC-0203B	SC	Starts and Stops HFP- MP-00007 via HFP-JY-0203B	
	HFP-YC-0022		Opens and Closes valve HFP-YV-0022, HFP-PMP-00007 Priming Valve	
HFP-PMP-00001/2 (Melter 1 Feed Vessel ADS Pumps)	HFP-FC-0034E		Controls Water Flow by Modulating HFP-FV-0034E	
	HFP-FC-0035E		Controls Water Flow by Modulating HFP-FV-0035E	
	HFP-YC-0057		Opens and Closes valve HFP-YV-0057, HFP-PMP-00001/2 Instrument Service Air Header Valve	
	HFP-YC-0034A		Opens and Closes HFP-YC-0034A, HFP-PMP-00001 Poppet Control	
	HFP-YC-0034B		Opens and Closes HFP-YC-0034B, HFP-PMP-00001 Air Supply Valve	
	HFP-YC-0034C		Opens and Closes HFP-YC-0034C, HFP-PMP-00001 Air/Water Supply Valve	
	HFP-YC-0034D		Opens and Closes HFP-YC-0034D, HFP-PMP-00001 Air Supply valve	
	HFP-YC-0034E		Opens and Closes HFP-YC-0034E, Melter 1 West Nozzle Water Supply Valve	

Table 4–3 Automatic Actions for the HLW HFP System

	HFP-YC-0034F		Opens and Closes HFP-YC-0034F, HFP-PMP-00001 Air Supply valve	
	HFP-HS-0034E		Starts and Stops HFP-PMP-00001 Operating Sequence	
	HFP-YC-0035A		Opens and Closes HFP-YC-0035A, HFP-PMP-00002 Poppet Control	
	HFP-YC-0035B		Opens and Closes HFP-YC-0035B, HFP-PMP-00002 Air Supply Valve	
	HFP-YC-0035C		Opens and Closes HFP-YC-0035C, HFP-PMP-00002 Air/Water Supply Valve	
	HFP-YC-0035D		Opens and Closes HFP-YC-0035D, HFP-PMP-00002 Air Supply Valve	
	HFP-YC-0035E		Opens and Closes HFP-YC-0035E, HFP-PMP-00002 Nozzle Water Supply Valve	
	HFP-YC-0035F		Opens and Closes HFP-YC-0035F, HFP-PMP-00002 Air Supply Valve	
	HFP-HS-0035E		Starts and Stops HFP-PMP-00002 Operating Sequence	
HFP-AGT-00001 (Melter 1 Feed Preparation Vessel Agitator)	HFP-YC-0011		Starts and Stops HFP-AGT-00001	
HFP-AGT-00002 (Melter 1 Feed Vessel Agitator)	HFP-YC-0018		Starts and Stops HFP-AGT-00002	

Table 4–3 Automatic Actions for the HLW HFP System

HFP-VSL-00005 (Melter 2 Feed Preparation Vessel)	HFP-YC-2105A		Opens and Closes valve HFP-YV-2105, Glass Former Addition Valve via HFP- YY-2105A	On Hold Pending Development of Glass Former Addition
	HFP-YC-2105B	SC	Opens and Closes valve HFP-YV-2105, Glass Former Addition Valve via HFP- YY-2105B	On Hold Pending Development of Glass Former Addition
	HFP-YC-2105C	SC	Opens and Closes valve HFP-YV-2105, Glass Former Addition Valve via HFP- YY-2105C	On Hold Pending Development of Glass Former Addition
	HFP-YC-2102		Opens and Closes valve HFP-YV-2102, Demister Flush Valve	
	HFP-YC-2103A		Opens and Closes valve HFP-YV-2103 via HFP-YY-2103A	
	HFP-YC-2103B	SC	Opens and Closes valve HFP-YV-2103 via HFP-YY-2103B	
	HFP-YC-2049		Opens and Closes valve HFP-YV-2049, HFP-EJCTR-00003 Ejector Valve	
	HFP-HS-2049A		Starts and Stops HFP-EJCTR-00005 Operating Sequence	
	HFP-YC-2923		Opens and Closes HFP-YV-2923, HFP-RK-00018 Sparge Tube Flush Valve	
	HFP-YC-2929	SC	Opens and Closes HFP-YV-2929, HFP-RK-00018 Sparge Tube Flush Valve	
	HFP-YC-2930	SC	Opens and Closes HFP-YV-2930, HFP-RK-00018 Sparge Tube Flush Valve	
	HFP-YC-2925	SC	Opens and Closes HFP-YV-2925, Air Amplifier Supply Valve	

Table 4–3 Automatic Actions for the HLW HFP System

	HFP-YC-2928	SC	Opens and Closes HFP-YV-2928, Air Amplifier Supply Valve	
	HFP-YC-2903	SC	Opens and Closes HFP-YV-2903, Air Sparging Valve	
	HFP-YC-2904	SC	Opens and Closes HFP-YV-2903, Air Sparging Valve	
HFP-VSL-00005 (Melter 2 Feed Preparation Vessel)	HFP-YC-2931	SC	Opens and Closes HFP-YV-2931, Safety Air Crossover Valve	
	HFP-YC-2932	SC	Opens and Closes HFP-YV-2932, Safety Air Crossover Valve	
	HFP-YC-2008A	SC	Opens and Closes HFP-YV-2008A, Bubbler Air/Water Supply Valve	
	HFP-YC-2008B	SC	Opens and Closes HFP-YV-2008B, Bubbler Air Supply Valve	
	HFP-YC-2013A	SC	Opens and Closes HFP-YV-2013A, Bubbler Air/Water Supply Valve	
	HFP-YC-2013B	SC	Opens and Closes HFP-YV-2013B, Bubbler Air Supply Valve	
HFP-PMP-00014/15 (Melter 2 Feed Vessel ADS Pumps)	HFP-FC-2034E		Controls Water Flow by Modulating HFP-FV-2034E	
	HFP-FC-2035E		Controls Water Flow by Modulating HFP-FV-2035E	
	HFP-YC-2034A		Opens and Closes HFP-YV-2034A, HFP-PMP-00014 Poppet Control	
	HFP-YC-2034B		Opens and Closes HFP-YV-2034B, HFP-PMP-00014 Air Supply Valve	
	HFP-YC-2034C		Opens and Closes HFP-YV-2034C, HFP-PMP-00014 Air/Water Supply Valve	

Table 4–3 Automatic Actions for the HLW HFP System

	HFP-YC-2034D		Opens and Closes HFP-YV-2034D, HFP-PMP-00014 Air Supply Valve	
	HFP-YC-2034E		Opens and Closes HFP-YV-2034E, Melter 2 West Nozzle Water Supply Valve	
	HFP-YC-2034F		Opens and Closes HFP-YV-2034F, HFP-PMP-00014 Air Supply Valve	
	HFP-HS-2034E		Starts and Stops HFP-PMP-00014 Operating Sequence	
	HFP-YC-2035A		Opens and Closes HFP-YV-2035A, HFP-PMP-00015 Poppet Control	
	HFP-YC-2035B		Opens and Closes HFP-YV-2035B, HFP-PMP-00015 Air Supply Valve	
	HFP-YC-2035C		Opens and Closes HFP-YV-2035C, HFP-PMP-00015 Air/Water Supply Valve	
	HFP-YC-2035D		Opens and Closes HFP-YV-2035D, HFP-PMP-00015 Air Supply Valve	
	HFP-YC-2035E		Opens and Closes HFP-YV-2035E, Melter 2 East Nozzle Water Supply Valve	
	HFP-YC-2035F		Opens and Closes HFP-YV-2035F, HFP-PMP-00015 Air Supply Valve	
	HFP-HS-2035E		Starts and Stops HFP-PMP-00015 Operating Sequence	
HFP-PMP-00018A (Melter 2 Feed Preparation Vessel Sample/Transfer Pump)	HFP-HS-2115		Pump HFP-PMP-00018A Priming Sequence Start Switch	
	HFP-YC-2037		Starts and Stops HFP-PMP-00018A	
	HFP-YC-2106A	SC	Starts and Stops HFP-PMP-00018A via HFP-JY-2106A	

Table 4–3 Automatic Actions for the HLW HFP System

	HFP-YC-2106B	SC	Starts and Stops HFP-PMP-00018A via HFP-JY-2106B	
	HFP-YC-2002		Opens and Closes valve HFP-YV-2002, HFP-PMP-00018A Priming Valve	
	HFP-YC-2039		Opens and Closes valve HFP-YV-2039, HFP-PMP-00018A Flow Path Control Valve	
HFP-PMP-00018B (Melter 2 Feed Preparation Vessel Sample/Transfer Pump)	HFP-HS-2116		Pump HFP-PMP-00018B Priming Sequence Start Switch	
	HFP-YC-2038		Starts and Stops HFP-PMP-00018B	
	HFP-YC-2107A	SC	Starts and Stops HFP-PMP-00018B via HFP-JY-2107A	
	HFP-YC-2107B	SC	Starts and Stops HFP-PMP-00018B via HFP-JY-2107B	
	HFP-YC-2003		Opens and Closes valve HFP-YV-2003, HFP-PMP-00018B Priming Valve	
	HFP-YC-2040		Opens and Closes valve HFP-YV-2040, HFP-PMP-00018B Flow Path Control Valve	
HFP-VSL-00006 (Melter 2 Feed Vessel)	HFP-YC-2024		Opens and Closes valve HFP-YV-2024, Demister Flush Valve	
	HFP-YC-2033		Opens and Closes valve HFP-YV-2033, HFP-EJCTR-00004 Ejector Valve	
	HFP-HS-2033A		Starts and Stops HFP-EJCTR-00004 Operating Sequence	
HFP-VSL-00006 (Melter 2 Feed Vessel)	HFP-YC-3023		Opens and Closes HFP-YV-3023, HFP-RK.-00017 Sparge Tube Flush Valve	

Table 4–3 Automatic Actions for the HLW HFP System

	HFP-YC-3029	SC	Opens and Closes HFP-YV-3029, HFP-RK.-00019 Sparge Tube Flush Valve	
	HFP-YC-3030	SC	Opens and Closes HFP-YV-3030, HFP-RK.-00019 Sparge Tube Flush Valve	
	HFP-YC-3025	SC	Opens and Closes HFP-YV-3025, Air Amplifier Supply Valve	
	HFP-YC-3028	SC	Opens and Closes HFP-YV-3028, Air Amplifier Supply Valve	
	HFP-YC-3003	SC	Opens and Closes HFP-YV-3003, Air Sparging Valve	
	HFP-YC-3004	SC	Opens and Closes HFP-YV-3004, Air Sparging Valve	
	HFP-YC-3031	SC	Opens and Closes HFP-YV-3031, Safety Air	
	HFP-YC-3032	SC	Opens and Closes HFP-YV-3032, Safety Air Crossover Valve	
HFP-PMP-00017 (Melter 2 Feed Vessel Sample Pump)	HFP-HS-2117		Pump HFP-PMP-00017 Priming Sequence Start Switch	
	HFP-YC-2042		Starts and Stops HFP-PMP-00017	
	HFP-YC-2203A	SC	Starts and Stops HFP-PMP-00017 via HFP-JY-2203A	
	HFP-YC-2203B	SC	Starts and Stops HFP-PMP-00017 via HFP-JY-2203B	
	HFP-YC-2022		Opens and Closes valve HFP-YV-2022, HFP-PMP-00017 Priming Valve	
HFP-PMP-00003/4 (Melter 2 Feed Vessel ADS Pumps)	HFP-YC-2057		Opens and Closes valve HFP-YV-2057, HFP-PMP-00003/4 Instrument Service Air Header Valve	

Table 4–3 Automatic Actions for the HLW HFP System				
HFP-AGT-00004 (Melter 2 Feed Preparation Vessel Agitator)	HFP-YC-2011		Starts and Stops HFP-AGT-00004	
HFP-AGT-00005 (Melter 2 Feed Vessel Agitator)	HFP-YC-2018		Starts and Stops HFP-AGT-00005	

4.1.6.4 Setpoints and Ranges

Alarm setpoints and process trips will be identified in a configuration data index (CDI) (24590-HLW-JDX-HFP-00001 future) which will be provided by C&I at a later date. Safety instrumented function trip setpoints will be identified in the associated safety system requirements specification for the specific safety instrumented function.

4.1.6.5 Interlocks, Bypasses, and Permissives

Interlocks, Bypasses, and Permissives will be identified in a configuration data index (CDI) (24590-HLW-JDX-HFP-0001 future) which will be provided by C&I at a later date.

Table 4– Trips and Interlocks for the HLW HFP System

Table 7.5.3 Trips and Interlocks for HLW HFP System				
Equipment No.	**Instrument No.**	**Properties**	**Function**	**Remarks**
HFP-VSL-00001 (Melter 1 Feed Preparation Vessel)	HFP-LI-0051_BQ (HFP-LT-0051)		HFP-LT-0051 Bad Quality: • Override Closes HFP-YV-0002 • Override Closes HFP-YV-0003 • Override Closes HFP-YV-0102 • Override Closes HFP-YV-0923 • Override Closes PWD-YV-0021 • Stops HFP-EJCTR-00001 Sequence • Override Stops HFP-AGT-00001 • Override Stogs HFP-PMP-00005AIB	
	HFP-LSH-0051 (HFP-LT-0051)		Switches volume calculation equations from equation f(x)1 for flanged bottom calculations to equation f(x)2 for inches to gallons conversion in the entire tank	

Table 4– Trips and Interlocks for the HLW HFP System

	HFP-LSHH-0051A (HFP-LT-0051)		HFP-VSL-00001 Level High High • Override Closes HFP-YV-0105 via HFP-YY-0105A • Override Closes HFP-YV-0002 • Override Closes HFP-YV-0003 • Override Closes HFP-YV-0102 • Override Closes HFP-YV-0103 via HFP-YY-0103A • Override Closes HFP-YV-0923 • Override Closes PWD-YV-0021	
	HFP-LSH-0051B (HFP-LT-0051)		HFP-VSL-00001 Transfer Volume High: • Override Closes HFP-YV-0103 • Override Stogs HLP-PMP-00019B	
	HFP-LSLL-0051A (HFP-LT-0051)		HFP-VSL-00001 Level Low Low: • Stops HFP-EJCTR-00001 Sequence • Override Stops HFP-AGT-00001 • Override Stops HFP-PMP-00005A/B	
	HFP-TSHH-0010 (HFP-TT-0010)		HFP-VSL-00001 Temperature High High Override Closes HFP-YV-0103	
	HFP-YC-0105A CLSD		HFP-VSL-00001 Glass Former Addition Valve Not Closed Override Closes HFP- YV-0103	

Table 4– Trips and Interlocks for the HLW HFP System

	HFP-YC-0103A CLSD		HFP-VSL-00001 Pretreatment Isolation Valve Not Closed Override Closes HFP- YV-0105	
HFP-VSL-00001 (Melter 1 Feed Preparation Vessel)	HFP-PSHH-0052 (HFP-PT-0052)	SS	HFP-VSL-00001 Pressure High High Override Closes HFP-YV-0105 via HFP- YY-0105B	
			HFP-VSL-00001 Pressure High High Override Closes HFP-YV-0105 via HFP- YY-0105A	
	HFP-LSHH-0050 (HFP-LT-0050)	SC	HFP-VSL-00001 Level High High • Override Closes HFP-YV-0105 via HFP- YY-0105B • Override Closes HFP-YV-0103 via	On Hold Pending PDSA Incorporation
			HFP-VSL-00001 Level High High • Override Closes HFP-YV-0105 via HFP- YY-0105A • Override Closes HFP-YV-0103 via HFP- YY-0103A	
	HFP-LSHH-0111 (HFP-LT-0111/ HFP-DT-0008)	SC	HFP-VSL-00001 Level High High Override Closes HFP-YV-0105 via HFP- YY-0105C	

Table 4– Trips and Interlocks for the HLW HFP System

			HFP-VSL-00001 Level High High • Override Closes HFP YV-0105 via HFP- YY-0105A • Override Closes HFP-YV-0103 via HFP- YY-0103A	
	Safety DIW Isolation Signal	SC	HFP-RK.-00016 Safety DIW Isolation Signal • Override Closes HFP-YV-0929 • Override Closes	On Hold Pending PDSA Incorporation
	HFP-FSLL-0910	SC	HFP-RK.-00016 Idle Sparge Flow Low Low Override Opens HFP-YV-0932	
	HFP-FSLL-0911	SC	HFP-RK.-00016 Idle Sparge Flow Low Low Override Opens HFP-YV-0931	
HFP-PMP-00005A/B (Melter 1 Feed Preparation Vessel Sample/Transfer Pumps)	HFP-FQSH-0113 AND HFP-YC-0039 POS2		HFP-PMP-00005A Totalized Flow High and HFP-YV-0039 in Transfer Alignment Auto Stops HFP-PMP-00005A	

Table 4– Trips and Interlocks for the HLW HFP System

	HFP-FQSH-0113 AND HFP-YC-0039 POS2 AND HFP-YC-0037 MAN		HFP-PMP-00005A Totalized Flow High andHFP-YV-0039 in Transfer Alignment and HFP-PMP-00005A in Manual Mode Override Stops HFP-PMP-00005A	
HFP-PMP-00005A/B (Melter 1 Feed Preparation Vessel Sample/Transfer Pumps)	HFP-FQSH-0114 AND HFP-YC-0040 POS2		HFP-PMP-00005B Totalized Flow High and HFP-YV-0040 in Transfer Alignment Auto Stops HFP-PMP-00005B	
	HFP-FQSH-0114 AND HFP-YC-0040 POS2 AND HFP-YC-0038 MAN		HFP-PMP-00005B Totalized Flow High and HFP-YV-0040 in Transfer Alignment Override Stops HFP-PMP-00005B	
	ASX-ZSH-3202 AND HFP-ISH-0118 (HFP-IT-0118)	SS	ASX-SMPLR-00029 Off Position and HFP-PMP-00005A Running Override Stops HFP-PMP-00005A via HFP-JY-0106B	
			ASX-SMPLR-00029 Off Position and HFP-PMP-00005A Running Override Stops HFP-PMP-00005A	

Table 4– Trips and Interlocks for the HLW HFP System

	ASX-ZSH-3203 AND HFP-ISH-0119 (HFP-IT-0119)	SS	ASX-SMPLR-00029 Off Position and HFP-PMP-00005B Running Override Stops HFP-PMP-00005B via HFP-JY-0107B	
			ASX-SMPLR-00029 Off Position and HFP-PMP-00005B Running Override Stops HFP-PMP-00005B	
	ASX-LSH-3240	SC	ASX-SMPLR-00029 Sump Level High • Override Stops HFP-PMP-00005A via HFP-JY-0106A • Override Stops HFP-PMP-00005B via HFP-JY-0107A	
			ASX-SMPLR-00029 Sump Level High • Override Stops HFP-PMP-00005A • Override Stops HFP-PMP-00005B	
	HFP-YC-0011 RNG		HFP-AGT-00001 Not Running • Override Stops HFP-PMP-00005A • Override Stops HFP-PMP-00005B	

Table 4– Trips and Interlocks for the HLW HFP System

HFP-VSL-00002 (Melter 1 Feed Vessel) HFP-RK.-00017 (HFP-VSL-00002 Sparge Rack)	HFP-LI-0048_BQ (HFP-LT-0048)		HFP-LT-0048 Bad Quality: • Override Closes HFP-YV-0022 • Override Closes HFP-YV-0024 • Override Closes HFP-YV-0039 • Override Closes HFP-YV-0040 • Stops HFP-EJCTR-00002 Sequence • Initiates Normal Feed Shutdown of HFP- PMP-00001/2 • Override Closes HFP-YV-1023 • Override Closes HFP-YV-0033 • Override Stop HFP-AGT-00002 • Override Closes PWD-YV-0021	
	HFP-LSH-0048 (HFP-LT-0048)		Switches volume calculation equations from equation f(x)1 for flanged bottom calculations to equation f(x)2 for inches to gallons conversion in the entire tank	

Table 4– Trips and Interlocks for the HLW HFP System

	HFP-LSHH-0048A (HFP-LT-0048)		HFP-VSL-00002 Level High High • Override Closes HFP-YV-0022 • Override Closes HFP-YV-0024 • Override Stop HFP-PMP-00005A/B • Override Closes HFP-YV-0039 • Override Closes HFP-YV-0040 • Override Closes HFP-YV-1023 • Override Closes PWD-YV-0021	
	HFP-LSLL-0048A (HFP-LT-0048)		HFP-VSL-00002 Level Low Low • Override Stops HFP-PMP-00007 • Override Stop HFP-AGT-00002 • Override Stops HFP-PMP-00001/2 • Stops HFP-EJCTR-00002 Sequence	
	HFP-TSHH-0017 (HFP-TT-0017)		HFP-VSL-00002 Temperature High High • Override Closes HFP-YV-0039 • Override Closes HFP-YV-0040 • Override Stops HFP-PMP-00005AIB	

Table 4– Trips and Interlocks for the HLW HFP System

	HFP-LSHH-0047 (HFP-LT-0047)	SC	HFP-VSL-00002 Level High High • Override Stops HFP-PMP-00005A via HFP-JY-0106A • Override Stops HFP-PMP-00005B via HFP-JY-0107A	On Hold Pending PDSA Incorporation
			HFP-VSL-00002 Level High High • Override Stops HFP-PMP-00005A • Override Stops HFP-PMP-00005B	
HFP-VSL-00002 (Melter 1 Feed Vessel) HFP-RK-00017 (HFP-VSL-00002 Sparge Rack)	HFP-LSHH-0207 (HFP-LT-0207/ HFP-DT-0013)	SC	HFP-VSL-00002 Level High High • Override Stop HFP-PMP-00005A via HFP-JY-0106B • Override Stop HFP-PMP-00005B via HFP-JY-0107B	
			HFP-VSL-00002 Level High High • Override Stop HFP-PMP-00005A • Override Stop HFP-PMP-00005B	
	Safety DIW Isolation Signal	SC	HFP-RK-00017 Safety DIW Isolation Signal • Override Closes HFP-YV-1029 • Override Closes HFP-YV-1030	On Hold Pending PDSA Incorporation

Table 4– Trips and Interlocks for the HLW HFP System

	HFP-FSLL-1010	SC	HFP-RK-00017 Idle Sparge Flow Low Low Override Opens HFP-YV-1032	
	HFP-FSLL-1011	SC	HFP-RK-00017 Idle Sparge Flow Low Low Override Opens HFP-YV-1031	
HFP-PMP-00007 (Melter 1 Feed Vessel Sampling Pump)	ASX-ZSH-3204 AND HFP-ISH-0208 (HFP-IT-0208)	SS	ASX-SMPLR-00029 Off Position and HFP-PMP-00007 Running Override Stops HFP-PMP-00007 via HFP-JY-0203B	
			Override Stops HFP-PMP-00007	
	ASX-LSH-3240	SC	ASX-SMPLR-00029 Sump Level High Override Stops HFP-PMP-00007 via HFP- JY-0203A	
			Override Stops HFP-PMP-00007	
HFP-PMP-00001/2 (Melter 1 Feed Vessel ADS Pumps)	HFP-YC-0018 RNG		HFP-AGT-00002 Not Running Initiates Normal Feed Shut Down ofHFP-PMP-00001/2	
	HOP-YC-0214 CLSD AND HOP-YC-0227 CLSD		HOP-HEME-00001A/B Discharge Valves Both Closed Initiates Normal Feed Shut Down ofHFP-PMP-00001/2	

Table 4– Trips and Interlocks for the HLW HFP System

	HOP-PDSHH-0222Z (HOP-PDT-0222/ HOP-PDT-0235) OR HOP-PDSHH-0223Z		HOP-HEPA-00001A/2A or HOP-HEPA-00001B/2B Pressure Differential High High Initiates Normal Feed Shut Down of HFP-PMP-00001/2	
HFP-PMP-0000112 (Melter 1 Feed Vessel ADS Pumps)	HOP-TSHH-0285Z (HOP-TT-0285/ HOP-TT-0288) OR HOP-TSHH-0284Z (HOP-TT-		HOP-HTR-00002A or HOP-HEPA-00001B Pressure Differential High High Initiates Normal Feed Shut Down ofHFP- PMP-00001/2	On Hold Pending Creation of PPJ Logic Diagrams for the HLW-HOP System
	HOP-LSHH/LSLL-0130A (HOP-LT-0118/ HOP-LT-0130)		HOP-SCB-00001 Level High High I Low Low Initiates Normal Feed Shut Down of HFP-PMP-00001/2	
	HOP-LSHH-0110A (HOP-LT-0110/ HOP-LT-0123)		HOP-VSL-00903 Level High High Initiates Normal Feed Shut Down of HFP-PMP-00001/2	
	HOP-ADSHH-0807Z (HOP-AT-0807/ HOP-AT-0826)		HOP-ADBR-00001A COx Differential High High Initiates Normal Feed Shut Down ofHFP-PMP-00001/2	
	HOP-ASH-0808A (HOP-AT-0808)		HOP-ADBR-00001A/B Hg Hourly Average High Initiates Normal Feed Shut Down of HFP-PMP-00001/2	

Table 4– Trips and Interlocks for the HLW HFP System

	HMP Melter Plemum Pressure High High		Melter 1 Plenum Pressure High High Initiates Normal Feed Shut Down of HFP- PMP-00001/2	On Hold Pending Enhancement of HLW-HMP System
HFP-AGT-00001 (Melter 1 Feed Preparation Vessel Agitator)	HFP-SSLL-0062 (HFP-ST-0062/ HFP-JT-0706)	SC	HFP-AGT-00001 Speed/Power Low Low • Override Closes HFP-YV-0105 via HFP- YY-0105B • Override Closes HFP-YV-0103 via HFP- YY-0103B • Override Opens HFP-YV-0903 via HFP- YY-0903	
			HFP-AGT-00001 Speed/Power Low Low • Override Closes HFP-YV-0105 via HFP- YY-0105A • Override Closes HFP-YV-0103 via HFP- YY-0103A	
HFP-AGT-00001 (Melter 1 Feed Preparation Vessel Agitator)	HFP-SSLL-0701 (HFP-ST-07011 HFP-JT-0707)	SC	HFP-AGT-00001 Speed/Power Low Low • Override Closes HFP-YV-0105 via HFP- YY-0105C • Override Closes HFP-YV-0103 via HFP- YY-0103C • Override Opens HFP-YV-0904 via HFP- YY-0904	

Table 4– Trips and Interlocks for the HLW HFP System

			HFP-AGT-00001 Speed/Power Low Low • Override Closes HFP-YV-0105 via HFP- YY-0105A • Override Closes HFP-YV-0103 via HFP- YY-0103A	
HFP-AGT-00002 (Melter 1 Feed Vessel Agitator)	HFP-SSLL-0063 (HFP-ST-0063/ HFP-JT-0806)	SC	HFP-AGT-00002 Speed/Power Low Low Override Opens HFP-YV-1003 via HFP- YY-1003	
	HFP-SSLL-0801 (HFP-ST-08011 HFP-JT-0807)	SC	HFP-AGT-00002 Speed/Power Low Low Override Opens HFP-YV-1004 via HFP- YY-1004	
HFP-VSL-00005 (Melter 2 Feed Preparation Vessel)	HFP-LI-2051_BQ (HFP-LT-2051)		HFP-LT-2051 Bad Quality: • Override Closes HFP-YV-2002 • Override Closes HFP-YV-2003 • Override Closes HFP-YV-2102 • Override Closes HFP-YV-2923 • Override Closes PWD-YV-0093 • Stops HFP-EJCTR-00004 Sequence • Override Stops HFP-AGT-00004 • Override Stops HFP-PMP-00018A/B	

Table 4– Trips and Interlocks for the HLW HFP System

	HFP-LSH-2051 (HFP-LT-2051)		Switches volume calculation equations from equation f(x)l for flanged bottom calculations to equation f(x)2 for inches to gallons conversion in the entire tank	
	HFP-LSHH-2051A (HFP-LT-2051)		HFP-VSL-00005 Level High High • Override Closes HFP-YV-2105 via HFP- YY-2105A • Override Closes HFP-YV-2002 • Override Closes HFP-YV-2003 • Override Closes HFP-YV-2102 • Override Closes HFP-YV-2103 via HFP- YY-2103A • Override Closes HFP-YV-2923 • Override Closes PWD-YV-0093	
HFP-VSL-00005 (Melter 2 Feed Preparation Vessel)	HFP-LSH-2051B (HFP-LT-2051)		HFP-VSL-00005 Transfer Volume High: • Override Closes HFP-YV-2103 • Override Stops HLP-PMP-00019A	

Table 4– Trips and Interlocks for the HLW HFP System

	HFP-LSLL-2051A (HFP-LT-2051)		HFP-VSL-00005 Level Low Low: • Stops HFP-EJCTR-00004 Sequence • Override Stops HFP-AGT-00004 • Override Stops HFP-PMP-00018A/B	
	HFP-TSHH-2010 (HFP-TT-2010)		HFP-VSL-00005 Temperature High High Override Closes HFP-YV-2103	
	HFP-YC-2105A CLSD		HFP-VSL-00005 Glass Former Addition Valve Not Closed Override Closes HFP- YV-2103	
	HFP-YC-2103A CLSD		HFP-VSL-00005 Pretreatment Isolation Valve Not Closed Override Closes HFP- YV-2105	
	HFP-PSHH-2052 (HFP-PT-2052)	SS	HFP-VSL-00005 Pressure High High Override Closes HFP-YV-2105 via HFP- YY-2105B	
			HFP-VSL-00005 Pressure High High Override Closes HFP-YV-2105 via HFP- YY-2105A	

Table 4– Trips and Interlocks for the HLW HFP System

	HFP-LSHH-0050 (HFP-LT-2050)	SC	HFP-VSL-00005 Level High High • Override Closes HFP-YV-2105 via HFP- YY-2105B • Override Closes HFP-YV-2103 via HFP- YY-2103B	On Hold Pending PDSA Incorporation
			HFP-VSL-00005 Level High High • Override Closes HFP-YV-2105 via HFP- YY-2.105A • Override Closes HFP-YV-2103 via HFP- YY-2103A	
	HFP-LSHH-2111 (HFP-LT-21111 HFP-DT-2008)	SC	HFP-VSL-00005 Level High High Override Closes HFP-YV-2105 via HFP- YY-2105C	
			HFP-VSL-00005 Level High High • Override Closes HFP-YV-2105 via HFP- YY-2105A • Override Closes HFP-YV-2103 via HFP- YY-2103A	
	Safety DIW Isolation Signal	SC	HFP-RK.-00018 Safety DIW Isolation Signal • Override Closes HFP-YV-2929 • Override Closes HFP-YV-2930	On Hold Pending PDSA Incorporation

Table 4– Trips and Interlocks for the HLW HFP System

HFP-VSL-00005 (Melter 2 Feed Preparation Vessel)	HFP-FSLL-2910	SC	HFP-RK-00018 Idle Sparge Flow Low Low Override Opens HFP-YV-2932	
	HFP-FSLL-2911	SC	HFP-RK-00018 Idle Sparge Flow Low Low Override Opens HFP-YV-2931	
HFP-PMP-00018AIB (Melter 2 Feed Preparation Vessel Sample/Transfer Pumps)	HFP-FQSH-2113 AND HFP-YC-2039 POS2		HFP-PMP-00018A Totalized Flow High and HFP-YV-2039 in Transfer Alignment Auto Stops HFP-PMP-00018A	
	HFP-FQSH-2113 AND HFP-YC-2039 POS2 AND HFP-YC-2037 MAN		HFP-PMP-00018A Totalized Flow High and HFP-YV-2039 in Transfer Alignment Auto Stops HFP-PMP-00018A Override Stops HFP-PMP-00018A if Pump is in Manual Mode	
	HFP-FQSH-2114 AND HFP-YC-2039 POS2		HFP-PMP-00018B Totalized Flow High and HFP-YV-2040 in Transfer Alignment Auto Stops HFP-PMP-00018B	
	HFP-FQSH-2114 AND HFP-YC-2039 POS2 AND HFP-YC-2038 MAN		HFP-PMP-00018B Totalized Flow High and HFP-YV-2040 in Transfer Alignment Override Stops HFP-PMP-00018B if Pump is in Manual Mode	

Table 4– Trips and Interlocks for the HLW HFP System

	ASX-ZSH-3302 AND HFP-ISH-2118 (HFP-IT-2118)	SS	ASX-SMPLR-00042 Off Position and HFP-PMP-00018A Running Override Stops HFP-PMP-00018A via HFP-JY- 2106A	
			ASX-SMPLR-00042 Off Position and HFP-PMP-00018A Running Override Stops HFP-PMP-00018A	
	ASX-ZSH-3303 AND HFP-ISH-2119 (HFP-IT-2119)	SS	ASX-SMPLR-00042 Off Position and HFP-PMP-00018B Running Override Stops HFP-PMP-00018B HFP-JY-2107A	
			ASX-SMPLR-00042 Off Position and HFP-PMP-00018B Running Override Stops HFP-PMP-00018B	
HFP-PMP-00018A/B (Melter 2 Feed Preparation Vessel Sample/Transfer Pumps)	ASX-LSH-3340	SC	ASX-SMPLR-00042 Sump Level High • Override Stops HFP-PMP-00018A via HFP-JY-2106A • Override Stops HFP-PMP-00018B via HFP-JY-2107A	
			ASX-SMPLR-00042 Sump Level High • Override Stops HFP-PMP-00018A • Override Stops HFP-PMP-00018B	

Table 4– Trips and Interlocks for the HLW HFP System

	HFP-YC-2011 RNG		HFP-AGT-00004 Not Running • Override Stops HFP-PMP-00018A • Override Stops HFP-PMP-00018B	
HFP-VSL-00006 (Melter 2 Feed Vessel)	HFP-LI-2048_BQ (HFP-LT-2048)		HFP-LT-2048 Bad Quality: • Override Closes HFP-YV-2022 • Override Closes HFP-YV-2024 • Override Closes HFP-YV-2039 • Override Closes HFP-YV-2040 • Override Stops HFP-AGT-00005 • Override Closes HFP-YV-3023 • Initiates Normal Feed Shutdown of HFP- PMP-00003/4 • Stops HFP-EJCTR-00005 Sequence • Override Closes PWD-YV-0093	
	HFP-LSH-2048 (HFP-LT-2048)		Switches volume calculation equations from equation f(x)1 for flanged bottom calculations to equation f(x)2 for inches to gallons conversion in the entire tank	

Table 4– Trips and Interlocks for the HLW HFP System

	HFP-LSHH-2048A (HFP-LT-2048)		HFP-VSL-00006 Level High High • Override Closes HFP-YV-2022 • Override Closes HFP-YV-2024 • Override Stop HFP-PMP-00018A/B • Override Closes HFP-YV-2039 • Override Closes HFP-YV-2040 • Override Closes HFP-YV-3023 • Override Closes PWD-YV-0093	
	HFP-LSLL-2048A (HFP-LT-2048)		HFP-VSL-00006 Level Low Low • Override Stops HFP-PMP-00017 • Override Stops HFP-AGT-00005 • Initiates Normal Feed Shutdown of HFP- PMP-00003/4 • Stops HFP-EJCTR-00005 Sequence	
HFP-VSL-00006 (Melter 2 Feed Vessel)	HFP-TSHH-2017 (HFP-TT-2017)		HFP-VSL-00006 Temperature High High • Override Closes HFP-YV-2039 • Override Closes HFP-YV-2040 • Override Stop HFP-PMP-00018A/B	

Table 4– Trips and Interlocks for the HLW HFP System

	HFP-LSHH-2047 (HFP-LT-2047)	SC	HFP-VSL-00006 Level High High • Override Stop HFP-PMP-00018A via HFP-JY-2106A • Override Stop HFP-PMP-00018B via HFP-JY-2107A	On Hold Pending PDSA Incorporation
			HFP-VSL-00006 Level High High • Override Stop HFP-PMP-00018A • Override Stop HFP-PMP-00018B	
	HFP-LSHH-2207 (HFP-LT-2207/ HFP-DT-2013)	SC	HFP-VSL-00006 Level High High • Override Stop HFP-PMP-00018A via HFP-JY-2106B • Override Stop HFP-PMP-00018B via HFP-JY-2107B	
			HFP-VSL-00006 Level High High • Override Stop HFP-PMP-00018A • Override Stop HFP-PMP-00018B	
	Safety DIW Isolation Signal	SC	HFP-RK.-00019 Safety DIW Isolation Signal • Override Closes HFP-YV-3029 • Override Closes HFP-YV-3030	On Hold Pending PDSA Incorporation

Table 4– Trips and Interlocks for the HLW HFP System

	HFP-FSLL-3010	SC	HFP-RK-00019 Idle Sparge Flow Low Low Override O_pens HFP-YV-3032	
	HFP-FSLL-3011	SC	HFP-RK.-00019 Idle Sparge Flow Low Low Override Opens HFP-YV-3031	
HFP-PMP-00017 (Melter 2 Feed Vessel Sampling Pump)	ASX-ZSH-3304 AND HFP-ISH-2208 (HFP-IT-2208)	SS	ASX-SMPLR-00042 Off Position and HFP-PMP-00017 Running Override Stops HFP-PMP-00017 via HFP-JY-2203A	
			ASX-SMPLR-00042 Off Position and HFP-PMP-00017 Running Override Stops HFP-PMP-00017	
	ASX-LSH-3340	SC	ASX-SMPLR-00042 Sump Level High Override Stops HFP-PMP-00017 via HFP- JY-2203A	
			ASX-SMPLR-00042 Sump Level High Override Stops HFP-PMP-00017	
HFP-PMP-00003/4 (Melter 2 Feed Vessel ADS Pumps)	HFP-YC-2018 RNG		HFP-AGT-00005 Not Running Initiates Normal Feed Shut Down ofHFP-PMP-00003/4	

Table 4– Trips and Interlocks for the HLW HFP System

HFP-PMP-00003/4 (Melter 2 Feed Vessel ADS Pumps)	HOP-YC-2214 CLSD AND HOP-YC-2227 CLSD		HOP-HEME-00002B Discharge Valves Both Closed Initiates Normal Feed Shut Down ofHFP-PMP-00003/4	
	HOP-PDSHH-2222Z (HOP-PDT-2222/ HOP-PDT-2235) OR HOP-PDSHH-		HOP-HEPA-00001A/2A or HOP-HEPA-00001B/2B Pressure Differential High High Initiates Normal Feed Shut Down of HFP-PMP-00003/4	
	HOP-TSHH-0285Z (HOP-TT-2285/ HOP-TT-2288) OR HOP-TSHH-2284Z (HOP-TT-		HOP-HTR-00002A or HOP-HEPA-OOOOlB Pressure Differential High High Initiates Normal Feed Shut Down of HFP- PMP-00003/4	On Hold Pending Creation of PPJ Logic Diagrams for the HLW-HOP System
	HOP-LSHH/LSLL-2130A (HOP-LT-2118/ HOP-LT-2130)		HOP-SCB-00001 Level High High I Low Low Initiates Normal Feed Shut Down of HFP-PMP-00003/4	
	HOP-LSHH-2110A (HOP-LT-2110/ HOP-LT-2123)		HOP-VSL-00903 Level High High Initiates Normal Feed Shut Down ofHFP-PMP-00003/4	
	HOP-ADSHH-2807Z (HOP-AT-2807/ HOP-AT-2826)		HOP-ADBR-OOOOlA COx Differential High High Initiates Normal Feed Shut Down ofHFP-PMP-00003/4	

Table 4– Trips and Interlocks for the HLW HFP System

	HOP-ASH-2808A (HOP-AT-2808)		HOP-ADBR-OOOOINB Hg Hourly Average High Initiates Normal Feed Shut Down ofHFP-PMP-00003/4	
	HMPMelter Plemum Pressure High High		Melter 1 Plenum Pressure High High Initiates Normal Feed Shut Down of HFP- PMP-00003/4	On Hold Pending Enhancement of HLW-HMP System
HFP-AGT-00004 (Melter 2 Feed Preparation Vessel Agitator)	HFP-SSLL-2062 (HFP-ST-2062/ HFP-JT-2706)	SC	HFP-AGT-00004 Speed/Power Low Low • Override Closes HFP-YV-2105 via HFP- YY-2105B • Override Closes HFP-YV-2103 via HFP- YY-2103B • Override Opens HFP-YV-2903 via HFP- YY-2903	
			HFP-AGT-00004 Speed/Power Low Low • Override Closes HFP-YV-2105 via HFP- YY-2105A • Override Closes HFP-YV-2103 via HFP- YY-2103A	

Table 4– Trips and Interlocks for the HLW HFP System

	HFP-SSLL-2701 (HFP-ST-27011 HFP-JT-2707)	SC	HFP-AGT-00004 Speed/Power Low Low • Override Closes HFP-YV-2105 via HFP- YY-2105C • Override Closes HFP-YV-2103 via HFP- YY-2103C • Override Opens HFP-YV-2904 via HFP- YY-2904	
			HFP-AGT-00004 Speed/Power Low Low • Override Closes HFP-YV-2105 via HFP- YY-2105A • Override Closes HFP-YV-2103 via HFP- YY-2103A	
HFP-AGT-00005 (Melter 2 Feed Vessel Agitator)	HFP-SSLL-2063 (HFP-ST-2063/ HFP-JT-2801)	SC	HFP-AGT-00005 Speed/Power Low Low Override Opens HFP-YV-3003	
	HFP-SSLL-2801 (HFP-ST-2801/ HFP-JT-2807)	SC	HFP-AGT-00005 Speed/Power Low Low Override Opens HFP-YV-3004	

4.1.6.6 Complex Control Schemes

4.1.6.6.1 General ICN Control Strategy for Pump Priming Logic

Pump priming is used by the Operator to assst in the starting of several vertical pumps within the HLW HFP system. The control loop numbers for the priming valve/pumps/handswitch can be substituted as shown in the table below for the priming logic of alternate pumps.

Table 4-5 Pump Priming Logic

PUMP	PRIMING VALVE	HANDSWITCH

HFP-PMP-00005A	HFP-YV-0002	HFP-HS-0115
HFP-PMP-00005B	HFP-YV-0003	HFP-HS-0116
HFP-PMP-00007	HFP-YV-0022	HFP-HS-0117
HFP-PMP-00018A	HFP-YV-2002	HFP-HS-2115
HFP-PMP-00018B	HFP-YV-2003	HFP-HS-2116
HFP-PMP-00017	HFP-YV-2022	HFP-HS-2117

The Operator places the hand switches for the following valves/pumps in Auto

- HFP-YV-0002 (HFP-PMP-00005A Priming Valve)
- HFP-PMP-00005A

The Operator starts the sequence by using hand switch HFP-HS-0115 to priming sequence, the sequence progresses as follows:

- HFP-YV-0002 opens
- HFP-PMP-00005A starts after a short delay
- HFP-YV-0002 closes after a short delay

The priming sequence is terminated by the priming valve closure upon starting of HFP-PMP-00005A or time elapse causing valve HFP-YV-0002 to Auto Close. If HFP-YV-0002 is in Manual Mode, then HFP-YV-0002 Override Closed upon sequence completion.

4.2 Operations

Reserved

4.3 Supplemental Information

Reserved

5 Sources, Bases, and Other References

5.1 Source / Basis References

Document Number	Rev	Title	Text Reference
24590-WTP-DB-ENG-01-001	2	Basis of Design	BOD
24590-HLW-PL-ENS-13-0001	0A	Safety Design Strategy for the High-Level Waste Facility	SDS
24590-HLW-WIQP-MS-09-0002	0A	WAI Item Qualification Plan for HLW Melter Feed Preparation Vessel Agitators	WAI Item Qualification Plan for HLW Melter Feed Preparation Vessel Agitators
24590-HLW-PL-RT-07-0001	3	IHLW Waste Form Compliance Plan for the Hanford Tank Waste Treatment and Immobilization Plant	IHLW Waste Form Compliance Plan for WTP
24590-WTP-RPT-OP-01-001	5	Operations Requirements Document	ORD

Document Number	Rev	Title	Text Reference
24590-WTP-PSAR-ESH-01-002-01	5E	Preliminary Documented Safety Analysis to Support Construction Authorization; General Information	PDSA - General
24590-WTP-PSAR-ESH-01-002-04	5G	Preliminary Documented Safety Analysis to Support Construction Authorization; HLW Facility Specific Information	PDSA - HLW Facility
24590-WTP-PSAR-ESH-01-002-02	5C	Preliminary Documented Safety Analysis to Support Construction Authorization; PT Facility Specific Information	PDSA - PT Facility
24590-WTP-QAM-QA-06-001	16	Quality Assurance Manual	QAM
24590-WTP-GPG-J-015	7	Safety Instrumented System Implementation	Safety Instrumented System Implementation
24590-WTP-SRD-ESH-01-001-02	7F	Safety Requirements Document, Volume II	SRD
24590-HLW-WSF-ENG-07-005	4	WAI Screening of HLW Glass Chemistry Processing Activities	WAI Screening of HLW Glass Chemistry Processing Activities
DE-AC27-01RV14136	N/A	DOE/BNI WTP Contract Mod No. 304, Section C - Statement of Work	WTP Contract

5.2 Other References

Document Number	Rev	Title
24590-WTP-Z0C-W13T-00010	0F	Contact Dose Rates to Equipment from Beta and Gamma Emitters
24590-WTP-J0-50-00012	2	Controls & Instrumentation In-line Flow Devices Straight Run Requirements
24590-HLW-TB-ENG-13-0002	0	Engineering Design Decision for HLW HFP
24590-HLW-WIQP-MS-09-0001	1A	HLW HFP Feed Preparation Vessels
24590-WTP-3DP-G04B-00046	31	Engineering Drawings
24590-WTP-3PS-M000-T0001	1	Engineering Specification for Air Displacement Slurry Pumps
24590-HLW-3PS-HFP-T0003	0	Engineering Specification for High Level Waste Melter Feed System Demisters, Air Ejectors and Overflow Flapper Valves
24590-WTP-3PS-P000-T0001	6	Engineering Specification for Piping Material Classes General Description and Summary
24590-WTP-3PS-JQ00-T0005	1	Engineering Specification for Management of Supplier Safety Software
24590-WTP-3PS-JQ00-T0004	1	Engineering Specification for Management of Supplier Software
24590-WTP-3PS-MACS-T0003	4	Engineering Specification for Mechanical Agitators
24590-WTP-3PS-MPC0-T0009	2	Engineering Specification for Vessel-Mounted Vertical Transfer Pumps - WTP HLW Facility
24590-101-TSA-W000-0004-172-00001	0A	Final Report: Technical Basis for HLW Vitrification Stream Physical and Rheological Property Bounding Conditions
24590-HLW-M6N-ASX-00008	N/A	General Instrumentation Revision to HLW ASX System P&ID (ASX-SMPLR-00029)
24590-HLW-M6N-ASX-00010	N/A	General Instrumentation Revision to HLW ASX System P&ID (ASX-SMPLR-00042)
24590-HLW-MFD-HFP-00003	5	Mechanical Systems Data Sheet: Mechanical Agitator
24590-HLW-MFD-HFP-00013	1	Mechanical Systems Data Sheet: Mechanical Agitator

Document Number	Rev	Title
24590-HLW-MPD-HFP-00007	5	Mechanical Systems Data Sheet: Vertical Centrifugal Pump
24590-HLW-M6C-HFP-00002	D	HFP-EJCTR-00001, -00002, -00004 and -00005 Steam Ejector Sizing Calculation
24590-HLW-M6C-HFP-00013	0C	Air Sparging Line Sizing Calculation
24590-HLW-N1D-HFP-00002	0	HFP-PMP-00007 and HFP-PMP-00017 HLW - Melter 1 and 2 Feed Vessel Sample - Recirc Pump
24590-HLW-N1D-HFP-00003	5	HFP-VSL-00001 and HFP-VSL-00005 HLW - HLW Melter 1 and 2 Feed Preparation Vessel
24590-HLW-N1D-HFP-00004	5	HFP-VSL-00002 and HFP-VSL-00006 HLW - Melter 1 and 2 Feed Vessel
24590-HLW-ES-PR-04-0001	1	HLW Melter Feed and Feed Preparation Vessel Utilization and Time Cycle Evaluation
24590-HLW-RPT-ENS-12-002	0	HLW Preliminary Post Accident Monitoring Report
24590-HLW-TB-ENG-13-0001	0	Engineering Design Decision for HLW RLD
24590-HLW-U0D-W16T-00001	1	HLW Room Environment Data Sheet
24590-PTF-MPC-HLP-00016	0B	Pump and Line Sizing Calculation for Pumps HLP-PMP-000019A/B
24590-WTP-GPG-M-0058	0A	Minimum Flow Velocity for Slurry Lines
CCN 199857	N/A	Modulating Control Valve Straight Run Guidelines
DOE-STD-1020-94	N/A	Natural Phenomena Hazards Design and Evaluation Criteria for Department of Energy Facilities
24590-WTP-M6-50-00008	3	P&ID Symbols and Legend (Sheet 8 of 8)
24590-WTP-DB-PET-09-001	1	Process Inputs Basis of Design (PIBOD)
24590-WTP-GPG-ENG-0159	2	Single Failure Analysis Process for Mechanical, HVAC and Control Systems
24590-WTP-GPP-SQP-208	3B	Plant Software Life Cycle Management
24590-WTP-GPG-M-013	2A	Plant Wash System Design
24590-101-TSA-W000-0009-195-00003	0A	Pretreated Waste and Melter Feed Composition Variability Testing using HLW Simulants
24590-HLW-MVC-HFP-00001	1	Process Information for HFP Vessels (HFP-VSL-00001, HFP-VSL-00002, HFP-VSL-00005, and HFP-VSL-00006)
24590-WTP-DB-PET-09-001	1	Process Inputs Basis of Design
24590-WTP-GPG-M-027	5	Recommended Slopes for Piping Systems
CCN 241253	N/A	Response to Defense Nuclear Facilities Safety Board (DNFSB) Staff Issue Report Regarding Plugging of Process Lines, Pretreatment Facility, Waste Treatment Plant, Hanford Site
24590-WTP-M4C-V11T-00011	0C	Revised Calculation of Hydrogen Generation Rates and Times to Lower Flammability Limit for WTP
24590-HLW-ES-ENG-13-003	0	Risk Reduction Study for the High Level Waste (HLW) Facility: Failure Modes, Effects, and Criticality Analysis (FMECA), In-Service Inspection (ISI), and Plugging
24590-HLW-PL-ENS-13-0001	0A	Safety Design Strategy for the High-Level Waste Facility
24590-WTP-GPG-J-015	7	Safety Instrumented System Implementation
24590-WTP-3DP-G04B-00093	6	System and Facility Design Descriptions
24590-WTP-GPG-ENG-0161	0	Technical Requirements Management

Document Number	Rev	Title
24590-WTP-GPG-ENG-0159	2	Single Failure Analysis Process for Mechanical, HVAC and control Systems
CCN 200377	N/A	WAI Screening of HFP Sample Loop Flow Meter
24590-WTP-PL-RACT-RT-0001	0	WTP Remotability Verification Plan
42 USC 6901	N/A	Resource Conservation and Recovery Act of 1976
ASTM A312	N/A	Standard Specification for Seamless, Welded, and Heavily Cold Worked Austenitic Stainless Steel Pipes
ASTM A240	N/A	Standard Specification for Chromium and Chromium-Nickel Stainless Steel Plate, Sheet, and Strip for Pressure Vessels and for General Applications

5.3 Design References

Document Number	Rev	Title
Process Flow Diagrams		
24590-HLW-M5-V17T-00001	6	Process Flow Diagram HLW Receipt & Feed Preparation (System HCP, GFR, & HFP)
P&IDs		
24590-PTF-M6-PWD-00057	4	PTF - P&ID Plant Wash & Disposal System Underground Transfer Lines
24590-HLW-M6-HCP-00001001	1	P&ID - HLW Concentrate Receipt Process System Melter 1 Transfer Piping
24590-HLW-M6-HCP-00002001	1	P&ID - HLW Concentrate Receipt Process System Melter 2 Transfer Piping
24590-HLW-M6-HFP-00001001	0	P&ID - HLW - HLW Melter Feed Process System Melter Feed Preparation HFP-VSL-00001
24590-HLW-M6-HFP-00001002	0	P&ID - HLW - HLW Melter Feed Process Sys Process System Sample/Transfer Pumps HFP-PMP-00005A/B
24590-HLW-M6-HFP-00001003	0	P&ID - HLW - HLW Melter Feed Process System Instrumentation / Vent HFP-VSL-00001
24590-HLW-M6-HFP-00001004	0	P&ID - HLW - HLW Melter Feed Process System Cooling and Utilities HFP-VSL-00001
24590-HLW-M6-HFP-00002001	0	P&ID - HLW HLW Melter Feed Process System Melter Feed Vessel HFP-VSL-00002
24590-HLW-M6-HFP-00002002	0	P&ID - HLW HLW Melter Feed Process System Instrumentation/Vent HFP-VSL-00002
24590-HLW-M6-HFP-00002003	0	P&ID - HLW HLW Melter Feed Process System Cooling and Utilities HFP-VSL-00002
24590-HLW-M6-HFP-00005001	0	P&ID - HLW - HLW Melter Feed Process System Ads Pump Controls HFP-PMP-00001
24590-HLW-M6-HFP-00005002	0	P&ID - HLW - HLW Melter Feed Process System Ads Pump Controls HFP-PMP-00002
24590-HLW-M6-HFP-00007001	0	P&ID - HLW - HLW Melter Feed Process System Agitation and Sparging HFP-VSL-00001
24590-HLW-M6-HFP-00008001	0	P&ID - HLW - HLW Melter Feed Process System Agitation and Sparging HFP-VSL-00002
24590-HLW-M6-HFP-00009001	0	P&ID - HLW - HLW Melter Feed Process System Sparge Rack Utility Supplies
24590-HLW-M6-HFP-00009002	0	P&ID - HLW - HLW Melter Feed Process System Rack Controls HFP-Rk-00016
24590-HLW-M6-HFP-00009003	0	P&ID - HLW - HLW Melter Feed Process System Distribution Header HFP-RK-00016
24590-HLW-M6-HFP-00009004	0	P&ID - HLW - HLW Melter Feed Process System Distribution Header HFP-RK-00016
24590-HLW-M6-HFP-00010001	0	P&ID - HLW - HLW Melter Feed Process System Sparge Rack Utility SUPPLIES

Document Number	Rev	Title
24590-HLW-M6-HFP-00010002	0	P&ID - HLW - HLW Melter Feed Process System Rack Controls HFP-RK-00017
24590-HLW-M6-HFP-00010003	0	P&ID - HLW - HLW Melter Feed Process System Distribution Header HFP-RK-00017
24590-HLW-M6-HFP-00010004	0	P&ID - HLW - HLW Melter Feed Process System Distribution Header HFP-RK-00017
24590-HLW-M6-HFP-20001001	0	P&ID - HLW - HLW Melter Feed Process System Helter Feed Preparation HFP-VSL-00005
24590-HLW-M6-HFP-20001002	0	P&ID - HLW - HLW Melter Feed Process System Sample/Transfer Pumps HFP-PMP-00018A/B
24590-HLW-M6-HFP-20001003	0	P&ID - HLW - HLW Melter Feed Process System Instrumentation / Vent HFP-VSL-00005
24590-HLW-M6-HFP-20001004	0	P&ID - HLW - HLW Melter Feed Process System Cooling and Utilities HFP-VSL-00005
24590-HLW-M6-HFP-20002001	0	P&ID - HLW HLW Melter Feed Process System Melter Feed Vessel HFP-VSL-00006
24590-HLW-M6-HFP-20002002	0	P&ID - HLW HLW Melter Feed Process System Instrumentation/Vent HFP-VSL-00006
24590-HLW-M6-HFP-20002003	0	P&ID - HLW HLW Melter FEED PROCESS SYSTEM COOLING AND UTILITIES HFP-VSL-00006
24590-HLW-M6-HFP-20005001	0	P&ID - HLW - HLW Melter FEED PROCESS SYSTEM ADS PUMP CONTROLS HFP-PMP-00014
24590-HLW-M6-HFP-20005002	0	P&ID - HLW - HLW Melter FEED PROCESS SYSTEM ADS PUMP CONTROLS HFP-PMP-00015
24590-HLW-M6-HFP-20007001	0	P&ID - HLW - HLW Melter Feed Process System Agitation and Sparging HFP-VSL-00005
24590-HLW-M6-HFP-20008001	0	P&ID - HLW - HLW Melter Feed Process System Agitation and Sparging HFP-VSL-00006
24590-HLW-M6-HFP-20009001	0	P&ID - HLW - HLW Melter Feed Process System Sparge Rack Utility SUPPLIES
24590-HLW-M6-HFP-20009002	0	P&ID - HLW - HLW Melter Feed Process System Rack Controls HFP-RK-00018
24590-HLW-M6-HFP-20009003	0	P&ID - HLW - HLW Melter Feed Process System Distribution Header HFP-RK-00018
24590-HLW-M6-HFP-20009004	0	P&ID - HLW - HLW Melter Feed Process System Distribution Header HFP-RK-00018
24590-HLW-M6-HFP-20010001	0	P&ID - HLW - HLW Melter Feed Process System Sparge Rack Utility SUPPLIES
24590-HLW-M6-HFP-20010002	0	P&ID - HLW - HLW Melter Feed Process System Rack Controls HFP-RK-00019
24590-HLW-M6-HFP-20010003	0	P&ID - HLW - HLW Melter Feed Process System Distribution Header HFP-RK-00019
24590-HLW-M6-HFP-20010004	0	P&ID - HLW - HLW Melter Feed Process System Distribution Header HFP-RK-000019
24590-HLW-M6-HMP-00001001	0	P&ID - HLW HLW Melter Process System Melter 1 Feed and Agitation
24590-HLW-M6-HMP-20001001	0	P&ID - HLW HLW Melter Process System Melter 2 Feed and Agitation
24590-HLW-M6-HMP-00013002	1	*P&ID - HLW HLW Melter Process System Melter 1 Pressure, Density and Level Detection HMP-RK-00021*
24590-HLW-M6-HMP-20013002	0	*P&ID - HLW HLW Melter Process System Melter 2 Pressure, Density and Level Detection HMP-RK-00023*
24590-HLW-M6-PWD-00006001	0	*P&ID - HLW Plant Wash and Disposal System Plant Wash Distribution Rack PWD-RK-00037*
24590-HLW-M6-PWD-20003001	0	*P&ID - HLW Plant Wash and Disposal System Plant Wash Distribution Rack PWD-RK-00044*
24590-HLW-M6-ASX-00004	1	P&ID - HLW Autosampling System Sample Cabinets ASX-SMPLR-00029

Document Number	Rev	Title
24590-HLW-M6-ASX-00005	1	P&ID - HLW Autosampling System Sample Cabinets ASX-SMPLR-00042
General Arrangement / Equipment Location Drawings		
24590-HLW-P1-P01T-00001	9	HLW Vitrification Building General Arrangement PLAN at EL -21'-0"
24590-HLW-P1-P01T-00002	7	HLW Vitrification Building General Arrangement PLAN at EL 0'-0"
24590-HLW-P1-P01T-00003	8	HLW Vitrification Building General Arrangement PLAN at EL 14'-0"
24590-HLW-P1-P01T-00005	6	HLW Vitrification Building General Arrangement Plan at EL 58'0"
24590-HLW-P1-P01T-00009	11	HLW Vitrification Building General Arrangement Sections D-D, E-E & F-F
24590-HLW-P1-P23T-00113	4	HLW Vitrification Building Equipment Location PLAN EL. 0'-0" / Area 113
24590-HLW-P1-P23T-00114	5	HLW Vitrification Building Equipment Location PLAN EL. 0'-0" / Area 114
24590-HLW-P1-P23T-00115	6	HLW Vitrification Building Equipment Location PLAN EL. 0'-0" / Area 115
24590-QL-POA-MVA0-00018-03-00002	0J	Drawing- HLW Melter ½ Feed Preparation Vessel Assembly Drawing

Appendix A Test Objectives, Conditions, and Acceptance Criteria

NOTE: Demonstrations and Tests identified in this appendix are preliminary, pending completion of design activities. They are established to document the flowdown of verification needs established in Section 3 but are not sufficiently detailed for development of specific system and equipment test plans. They may be used for general planning only. This note is to be removed when design is sufficiently progressed to provide the details needed to establish the basis for testing and acceptance criteria. **[HOLD]**

Requirement (para #)	Test (T) or Demo (D)	SU or COM	Plan (including SSCs)	Acceptance Criteria (TAC or GTC)*	Notes/Comments	Test Conditions
3.4.1.1.1	T	SU/COM	Perform integrated system test to verify the sample/transfer pumps are capable of providing a minimum transfer rate of 44 gpm from the MFPV to the MFV. Sample/Transfer Pumps - Component Tag Numbers (CTNs): HFP-PMP-00005A, -00005B, -00018A, and -00018B. Measure the flow rate using the following flow meters for the respective HFP vessels: Sample/Transfer - Flow Meters - CTNs: FE-0113, FE-0114, FE-2113, and FE-2114	**(GTC)** HFP sample/transfer pumps are capable of providing a minimum flow rate of 44 gpm from the MFPV to both the MFV and ASX.		Sample/Transfer Pumps operating Simulant with a viscosity of ≥40 cP and yield stress of ≥30 Pa or an approved alternative (i.e., in a test plan) PCJ operating and monitoring transfer velocity of sample/transfer pumps
3.4.1.1.2	T	SU/COM	Perform integrated system test to verify the ADS pumps are capable of providing a minimum transfer rate of 2 gpm from the MFV to the melter. ADS Pumps - CTNs: HFP-PMP-00001, -00002, -000014, and -00015. No flow meters - This can be measured based on level change in the MFV.	**(GTC)** ADS pumps are capable of providing a minimum flow rate of 2 gpm from the MFV to the melter.	System is not instrumented with permanent flow meter. This can be measured based on level change in the MFV.	ADS pumps operating Simulant with a viscosity of ≥40 cP and yield stress of ≥30 Pa or an approved alternative (i.e., in a test plan) ISA operating PCJ operating and monitoring airflow of ISA to ADS pumps
3.4.1.1.3	T	SU/COM	Perform integrated system test to verify the sample/transfer pumps are capable of providing a minimum transfer rate of 44 gpm from the MFPV to the ASX. Sample/Transfer Pumps - CTNs: HFP-PMP-00005A, -00005B, -00018A, and -00018B. Measure the flow rate using the following flow meters for the respective HFP vessels: Sample/Transfer - Flow Meters - CTNs: FE-0113, FE-0114, FE-2113, and FE-2114	**(GTC)** HFP sample/transfer pumps are capable of providing a minimum flow rate of 44 gpm from the MFPV to the ASX.		Sample/Transfer Pumps operating Simulant with a viscosity of ≥40 cP and yield stress of ≥30 Pa or an approved alternative (i.e., in a test plan) PCJ operating and monitoring transfer velocity of sample/transfer pumps
3.4.4.1	D	SU/COM	Demonstrate remotability in accordance with test plans developed by the Commissioning Remote Handling work group per 24590-WTP-PL-RACT-RT-0001, *WTP Remotability Verification Plan.*	**(GTC)** Successful remote removal and re-installation of the all the HFP equipment/ components listed in the test plans.	Physical demonstration	Pre-Hot Operations HSH operating
3.4.4.3	D	SU/COM	**[HOLD]** Demonstrate the capability to flush the HLW concentrate transfer lines from the HLW Facility to the PT Facility, using water from the HLW Facility. Perform a baseline flush test measurement without simulant, and then perform a second flush test after a simulant transfer.	**(GTC)** System demonstrates the capability to flush the PT Facility HLW concentrate transfer lines using water from the HLW Facility. Flush velocity 6-12 fps		Simulant required

Requirement (para #)	Test (T) or Demo (D)	SU or COM	Plan (including SSCs)	Acceptance Criteria (TAC or GTC)*	Notes/Comments	Test Conditions
3.5.3.8	D	SU/COM	[HOLD] Demonstrate the steam ejectors can transfer HFP vessel washwater to the RLD (RLD-VSL-00008).	**(GTC)** The steam ejectors are capable of transferring washwater from the HFP vessels to RLD-VSL-00008.	This will be performed during the verification of requirement 3.5.4.1	See Requirement 3.5.4.1
3.6.3.1	T	SU/COM	**[HOLD]** Perform integrated system test to verify flushing velocity meets the acceptable range for the following sample and transfer line flushes listed below and using up to 3 line volumes of demineralized water: • **HLW Concentrate Piping between PT Facility and HLW Facility MFPV** o Flow Transmitter - CTN: PWD-FT-0401, PWD-FT-0402, DIW-FT-1310, and DIW-FT-1321 (24590-HLW-M6-HLP-00009001 and 24590-PTF-M6-DIW-00003001) • **Sample/Recirculation Piping between each HFP Vessel and the ASX** o Flow Transmitter – CTN: FT-3102 (24590-HLW-M6-DIW-00001001) • **HLW Melter Feed Piping from MFPV to MFV** o Flow Transmitter – CTN: FT-3102 (24590-HLW-M6-DIW-00001001) • **HLW Melter Feed Piping from MFV to Melter** o Flow Transmitter – CTN: FT-0034E (24590-HLW-M6-HFP-00005001) • **HLW Process Waste Transfer line between Melter Cave 1 and Melter Cave 2** o **TBD**	**(GTC)** The velocity of the transfer line flush is within the acceptable range to prevent solids from settling in the piping. 6-12 fps for slurries without glass formers and 6-10 fps for slurries with glass formers		PCJ operating and monitoring flow meters Integrated water run Simulant not required
3.6.4.1	D	SU/COM	Demonstrate flushing and draining capabilities during integrated system testing.	**(GTC)** System demonstrates capability of being drained and/or pumped to remove flushing liquid from equipment, components, and piping.	This will be performed during the verification of requirement 3.6.3.1	See Requirement 3.6.3.1
3.6.4.2	T/D	SUP& SU/COM	(SUP) Test fabricated valves to verify their closure rate meets the specified performance criteria for preventing water hammer. (SU/COM) Demonstrate that valve closure rates to do not produce water hammer.	(GTC) The valves closure rate meets the performance criteria. Performed by supplier. (GTC) The installed valves closure rate does not produce water hammer. Performed on installed valves.		All normal operating conditions.
3.8.3.1	T	SU/COM	**[HOLD]** Perform integrated system test to verify the ISA provides air purge supply to the spargers of at least 200 times the maximum HGR. **Sparger Tube - Flow Meters:** • HFP-VSL-00001 (MFPV) - Sparger Flow Meters - CTNs: FT-0912, FT-0913, FT-0914, FT-0915, FT-0916, FT-0917, FT-0918, and FT-0919 (HFP-RK-00016, 24590-HLW-M6-HFP-00009003/-00009004) • HFP-VSL-00002 (MFV) - Sparger Flow Meters - CTNs: FT-1012, FT-1013, FT-1014, FT-1015, FT-1016, FT-1017, FT-1018, and FT-1019 (HFP-RK-00016, 24590-HLW-M6-HFP-00010003/-00010004) • HFP-VSL-00005 (MFPV) - Sparger Flow Meters - CTNs: FT-2912, FT-2913, FT-2914, FT-2915, FT-2916, FT-2917, FT-2918, and FT-2919 (HFP-RK-00018, 24590-HLW- M6-HFP-20009003/-20009004) • HFP-VSL-00006 (MFV) - Sparger Flow Meters - CTNs: FT-3012, FT-3013, FT-3014, FT-3015, FT-3016, FT-30117, FT-3018, and FT-3019 (HFP-RK-00018, 24590-HLW- M6-HFP-20010003/-20010004) **Main Header Supply to Sparger Tubes - Flow Meters:** • HFP-VSL-00001 (MFPV) - Sparger Main Header Flow Meters - CTNs: FT-0906, FT-0907, FT-0910, and FT-0911 (HFP-RK-00016, 24590-HLW-M6-HFP-00009002) • HFP-VSL-00002 (MFV) - Sparger Main Header Flow Meters - CTNs: FT-1006, FT-1007, FT-1010, and FT-1011	**(TAC)** The ISA is capable of providing a minimum airflow to the spargers of at least 200 times the maximum HGR.		PCJ operating and monitoring airflow of ISA Vessel content level at normal operating level

Requirement (para #)	Test (T) or Demo (D)	SU or COM	Plan (including SSCs)	Acceptance Criteria (TAC or GTC)*	Notes/Comments	Test Conditions
			(HFP-RK-00017, 24590-HLW- M6-HFP-00010002) • HFP-VSL-00005 (MFPV) - Sparger Main Header Flow Meters CTNs: FT-2906, FT-2907, FT-2910, and FT-2911 (HFP-RK-00018, 24590-HLW- M6-HFP-20009002) • HFP-VSL-00006 (MFV) - Sparger Main Header Flow Meters - CTNs: FT-3006, FT-3007, FT-3010, and FT-3011 (HFP-RK-00019, 24590-HLW- M6-HFP-20010002)			
3.8.3.2	T	SU/COM	[**HOLD**] Perform integrated system test to verify the ISA provides emergency air sparging supply to the spargers at the minimum design flow rate 42 scfm/sparger tube. **Sparger Tubes - Flow Meters:** • HFP-VSL-00001 (MFPV) - Sparger Flow Meters - CTNs: FT-0912, FT-0913, FT-0914, FT-0915, FT-0916, FT-0917, FT-0918, and FT-0919 (HFP-RK-00016, 24590-HLW-M6-HFP-00009003/-00009004) • HFP-VSL-00002 (MFV) - Sparger Flow Meters - CTNs: FT-1012, FT-1013, FT-1014, FT-1015, FT-1016, FT-1017, FT-1018, and FT-1019 (HFP-RK-00016, 24590-HLW-M6-HFP-00010003/-00010004) • HFP-VSL-00005 (MFPV) - Sparger Flow Meters - CTNs: FT-2912, FT-2913, FT-2914, FT-2915, FT-2916, FT-2917, FT-2918, and FT-2919 (HFP-RK-00018, 24590-HLW- M6-HFP-20009003/-20009004) • HFP-VSL-00006 (MFV) - Sparger Flow Meters - CTNs: FT-3012, FT-3013, FT-3014, FT-3015, FT-3016, FT-30117, FT-3018, and FT-3019 (HFP-RK-00018, 24590-HLW- M6-HFP-20010003/-20010004) **Main Header Supply to Sparger Tubes - Flow Meters:** • HFP-VSL-00001 (MFPV) - Sparger Main Header Flow Meters - CTNs: FT-0906, FT-0907, FT-0910, and FT-0911 (HFP-RK-00016, 24590-HLW-M6-HFP-00009002) • HFP-VSL-00002 (MFV) - Sparger Main Header Flow Meters - CTNs: FT-1006, FT-1007, FT-1010, and FT-1011 (HFP-RK-00017, 24590-HLW- M6-HFP-00010002) • HFP-VSL-00005 (MFPV) - Sparger Main Header Flow Meters - CTNs: FT-2906, FT-2907, FT-2910, and FT-2911 (HFP-RK-00018, 24590-HLW- M6-HFP-20009002) • HFP-VSL-00006 (MFV) - Sparger Main Header Flow Meters - CTNs: FT-3006, FT-3007, FT-3010, and FT-3011 (HFP-RK-00019, 24590-HLW- M6-HFP-20010002)	**(TAC)** The ISA is capable of providing a minimum airflow of 42 scfm per sparge tube.		SC ISA operating PCJ/PPJ operating and monitoring airflow of ISA Vessel content level at normal operating level
3.9.3.1.1	D	SU/COM	Perform an integrated system demonstration to verify the DIW system provides a water supply for priming the sample/transfer pumps. Sample/Transfer Pumps - CTNs: HFP-PMP-00005A, -00005B, -00007, -00017, -00018A, and -00018B. DIW System Supply Flow Meter - CTNs: FT-0651 and FT-2351 (24590-HLW-M6-PWD-00006001 and 24590-HLW-M6-PWD-20003001)	**(GTC)** The DIW system is capable of providing a water supply for priming the sample/transfer pumps and the pumps operate.		Sample/Transfer pumps operating Simulant Required
3.9.3.2.1	T	SU/COM	This test will be performed in requirement 3.4.1.1.2 since the ADS pumps receive air supply from the ISA that allows the ADS pumps to achieve the minimum transfer rate. ADS Pumps - CTNs: HFP-PMP-00001, -00002, -000014, and -00015.	**(GTC)** The ISA system is capable of providing an air supply for the pumps to operate at the design flow rate.	This will be performed during the verification of requirement 3.4.1.1.2	See Requirement 3.4.1.1.2
3.10.1.1.1	D	SU/COM	Demonstrate the capability to remotely monitor HFP vessel temperature in the facility control room. Temperature Elements - CTNs: TE-0010, TE-2010, TE-0017, and TE-2017	**(GTC)** The temperature elements are monitored and displayed on the PCJ.		PCJ operating and monitoring Simulate HFP vessel temperature
3.10.1.1.2	D	SU/COM	Demonstrate the capability to remotely monitor HFP vessel pressure in the facility control room. Pressure Indicators - CTNs: PT-0052, PT-2052 (**TBD** for the MFV pressure indicators)	**(GTC)** The pressure elements are monitored and displayed on the PCJ.		PCJ operating and monitoring Simulate HFP vessel pressure

Requirement (para #)	Test (T) or Demo (D)	SU or COM	Plan (including SSCs)	Acceptance Criteria (TAC or GTC)*	Notes/Comments	Test Conditions
3.10.1.1.4	T	SU/COM	Perform integrated system test to verify the radar level sensor to have an accuracy of ±2 % of full-scale for the normal operating range of the vessel level MFPVs - CTNs: HFP-VSL-00001 and -00005. MFPVs - Level Detection - CTNs: LT-0051 and LT-2051	(**GTC**) The vessel level volume detected is within ±2 % of full-scale of the actual volume of water added to the vessel.	Accuracy of level detection will be verified during mapping of the vessel colume versus radar level output for the MFPVs.	Integrated water run PCJ operating and monitoring HFP vessel radar level detection operating Bubblers operating Agitators off
3.10.1.2.3	D	SU/COM	Demonstrate the capability to remotely monitor agitator speed and power in the facility control room. Mechanical Agitator Speed Sensors - CTNs: HFP-ST-0062, HFP-ST-0063, HFP-ST-0701, HFP-ST-0801, HFP-ST-2062, HFP-ST-2063, HFP-ST-2701, and HFP-ST-2801 Mechanical Agitator Power Sensors - CTNs: HFP-JT-0706, HFP-JT-0707, HFP-JT-0806, HFP-JT-0807, HFP-JT-2706, HFP-JT-2707, HFP-JT-2806, HFP-JT-2807	(**TAC**) The PPJ is capable of remotely monitoring the agitator speed and power in the facility control room.		PPJ operating and monitoring Simulate mechanical agitator power and speed
3.10.1.3.1	D	SU/COM	[**HOLD**] Perform a demonstration to verify the capability to monitor the sparger airflow rates using the PCJ.	(**TAC**) The PCJ is capable of monitor the airflow rate through the spargers.	This will be performed during the verification of requirements 3.8.3.1 and 3.8.3.2	See Requirements 3.8.3.1 and 3.8.3.2
3.10.1.3.2	D	SU/COM	[**HOLD**] Demonstrate the capability to initiate emergency sparge airflow when the PPJ receives a signal to initiate emergency sparge mode.	(GTC) A signal sent from the PPJ initiates emergency sparging.		PPJ operating and monitoring Simulate loss of mechanical agitator power.
3.10.1.3.3	T	SU/COM	[**HOLD**] Verify ISA safety air control valves switch from non-Safety purge ISA to Safety ISA supply to the spargers when the flow rate drops below the (**TBD**) setpoint.	(**TAC**) PPJ is capable of switching the ISA safety air control valves from non-Safety purge ISA to Safety ISA supply to the spargers when the flow rate drops below the setpoint.	This will be performed during the verification of requirement 3.10.2.1.3	See Requirement 3.10.2.1.3
3.10.1.4.2	T	SU/COM	[**HOLD**] Perform a Test to verify the HFP vessel sample/transfer pumps shutoff upon receiving a signal from the control system in response to a high liquid-level (**TBD**) setpoint interlock in the ASX sample enclosure. Sample/Transfer Pumps - CTNs: HFP-PMP-00005A, -00005B, -00007, -00017, -00018A, and -00018B. ASX Samplers - CTNs: ASX-SMPLR-00029 and ASX-SMPLR-00042	(**TAC**) The HFP sample/transfer pumps shutdown upon receipt of the liquid level detection signal from the PPJ.		HFP sample/transfer pumps operating PPJ operating Simulate interlock signal to shutoff the sample/transfer pumps
3.10.1.4.3	T	SU/COM	Perform a Test to verify the HFP vessel sample/transfer pumps cannot startup when the ASX three-way valves are positioned open to the sample line flush connection. Sample/Transfer Pumps - CTNs: HFP-PMP-00005A, -00005B, -00007, -00017, -00018A, and -00018B. ASX three-way valves - CTNs: (YV-3202, YV-3203, YV-3204, YV-3302, YV-3303, and YV-3304) in ASX system	(**TAC**) The HFP vessel sample/transfer pumps cannot startup when the ASX three-way valves are positioned open to the sample line flush connection		PPJ monitoring valve position Sample/transfer pumps are operable DIW system is operating Simulate permissive signal to the sample/transfer pumps
3.10.1.4.3	D	SU/COM	Perform a demonstration to verify the HFP vessel sample/transfer pumps terminate operation when the ASX three-way valves are positioned open to the sample line flush connection while the HFP vessel sample/transfer pumps are in operation. Sample/Transfer Pumps - CTNs: HFP-PMP-00005A, -00005B, -00007, -00017, -00018A, and -00018B.	(**TAC**) The HFP vessel sample/transfer pumps shutdown operation when the ASX three-way valves are positioned open to the sample line flush connection.		PPJ monitoring valve position Sample/transfer pumps are operating DIW system is operating

Requirement (para #)	Test (T) or Demo (D)	SU or COM	Plan (including SSCs)	Acceptance Criteria (TAC or GTC)*	Notes/Comments	Test Conditions
			ASX three-way valves - CTNs: (YV-3202, YV-3203, YV-3204, YV-3302, YV-3303, and YV-3304) in ASX system			Simulate interlock signal to shutoff the sample/transfer pumps
3.10.1.4.4	D	SU/COM	[**HOLD**] Demonstrate the capability to automatically terminate transfer from MFV to the melter when a high-high-high pressure (**TBD**) setpoint is reached in the melter plenum using the PPJ. ADS Pumps - CTNs: HFP-PMP-00001, -00002, -000014, and -00015. HMP Pressure Sensors - CTNs: PDT-0139A, PDT-0139B, PDT-2139A, and PDT-2139B (24590-HLW-M6-HMP-00013002 and 24590-HLW-M6-HMP-20013002)	(**TAC**) The ADS pumps shutdown operation upon receipt of a high melter pressure signal from the PPJ.		PPJ operating and monitoring pressure in the melter ADS pumps operating Simulate high melter pressure interlock signal to shutoff the ADS pumps
3.10.2.1.1	T	SU/COM	[**HOLD**] Perform a test to verify the glass former feed line isolation valve closes in response to interlock signal. Mechanical Agitator Speed Sensors - CTNs: HFP-ST-0062, HFP-ST-0063, HFP-ST-0701, HFP-ST-0801, HFP-ST-2062, HFP-ST-2063, HFP-ST-2701, and HFP-ST-2801 Mechanical Agitator Power Sensors - CTNs: HFP-JT-0706, HFP-JT-0707, HFP-JT-0806, HFP-JT-0807, HFP-JT-2706, HFP-JT-2707, HFP-JT-2806, HFP-JT-2807 Glass Former Feed Isolation Valves - CTNs: YV-0105 and YV-2105	(**TAC**) The isolation valve on the glass former feed line closes when either of the following PCJ/PPJ conditions are met: • The MFPV mechanical agitator speed or power is outside of (**TBD**) setpoint values (i.e., during emergency sparge mode) or • Glass formers are not being fed to the MFPVs and the glass former isolation valve is open (Source of not being fed signal indeterminate).		PCJ/PPJ operating and monitoring Simulate conditions via PPJ
3.10.2.1.2	T	SU/COM	[**HOLD**] Test the PPJ system to verify the emergency sparger mode is initiated when the mechanical agitator is unavailable (speed or power outside established (**TBD**) setpoints). Countdown timer will need to be accelerated to initiate the operation of the safety air control valves. Mechanical Agitator Speed Sensors - CTNs: HFP-ST-0062, HFP-ST-0063, HFP-ST-0701, HFP-ST-0801, HFP-ST-2062, HFP-ST-2063, HFP-ST-2701, and HFP-ST-2801 Mechanical Agitator Power Sensors - CTNs: HFP-JT-0706, HFP-JT-0707, HFP-JT-0806, HFP-JT-0807, HFP-JT-2706, HFP-JT-2707, HFP-JT-2806, HFP-JT-2807 <u>Safety Air Control Valves:</u> CTNs: YV-0903,YV-0931, YV-0904, and YV-0932 (HFP-RK-00016, 24590-HLW-M6-HFP-00009002) CTNs: YV-1003,YV-1031, YV-1004, and YV-1032 (HFP-RK-00017, 24590-HLW- M6-HFP-00010002) CTNs: YV-2903,YV-2931, YV-2904, and YV-2932 (HFP-RK-00018, 24590-HLW- M6-HFP-20009002) CTNs: YV-3003,YV-3031, YV-3004, and YV-3032 (HFP-RK-00019, 24590-HLW- M6-HFP-20010002)	(**TAC**) The spargers switch from idle to emergency sparge mode (countdown) upon receipt of a signal from the PPJ that the agitator is unavailable based on the (**TBD**) setpoints.		PCJ/PPJ operable SC ISA operable Simulate conditions via PPJ Countdown timer operable
3.10.2.1.3	T	SU/COM	[**HOLD**] Test the PPJ system to verify the ISA safety air control valves switch from non-safety purge ISA to safety ISA supply to the spargers when the flow rate drops below the (**TBD**) setpoint. <u>Safety Air Control Valves:</u> CTNs: YV-0903,YV-0931, YV-0904, and YV-0932 (HFP-RK-00016, 24590-HLW-M6-HFP-00009002) CTNs: YV-1003,YV-1031, YV-1004, and YV-1032 (HFP-RK-00017, 24590-HLW- M6-HFP-00010002) CTNs: YV-2903,YV-2931, YV-2904, and YV-2932 (HFP-RK-00018, 24590-HLW- M6-HFP-20009002) CTNs: YV-3003,YV-3031, YV-3004, and YV-3032 (HFP-RK-00019, 24590-HLW- M6-HFP-20010002)	(**TAC**) PPJ is capable of switching the ISA safety air control valves from non-Safety purge ISA to Safety ISA supply to the spargers when the flow rate drops below the setpoint.		PCJ/PPJ operable Safety and non-Safety ISA operable Simulate conditions via PPJ

Requirement (para #)	Test (T) or Demo (D)	SU or COM	Plan (including SSCs)	Acceptance Criteria (TAC or GTC)*	Notes/Comments	Test Conditions
3.10.2.1.4	D	SU/COM	Demonstrate the HFP vessel air amplifiers are activated in response to a seismic shutdown signal. Air Amplifier CTNs: HFP-EJCT-00006, -00007, -00008, and -00009.	(**TAC**) The air amplifiers are automatically activated following the seismic signal activation.		PCJ/PPJ operating Simulate seismic shutdown signal SC ISA operable HOP shutdown Spargers in emergency sparge mode (full sparge flow) Ventilation in seismic safe mode
3.10.2.2.1	T	SU/COM	[**HOLD**] Verify the high-high liquid level feed diversion valve interlock will shut the feed diversion valve and turn off the HLP transfer pumps when MFPV content levels exceed (**TBD**) setpoint values. MFPV Feed Diversion Valves - CTNs: YV-0103 and YV-2103 HLP Transfer Pumps - CTNs: HLP-PMP-00019A and HLP-PMP-00019B	(**TAC**) The HLP transfer pumps shutdown when the PPJ detects a high-high liquid level that exceeds (**TBD**) setpoint values in the MFPV.		Simulate MFPV contents reach the high-high liquid level PCJ/PPJ operable Simulate conditions via PPJ HLP transfer pumps operable
3.10.2.2.2	T	SU/COM	[**HOLD**] Test the glass former feed line isolation valve position response to the interlock scenarios listed below: • HFP-VSL-00001/HFP-VSL-00005 headspace pressure, glass former feed line isolation valve interlock • HFP-VSL-00001/HFP-VSL-00005 waste level, glass former feed line isolation valve interlock • HOP pressure, glass former feed line isolation valve interlock Glass Former Feed Isolation Valves - CTNs: YV-0105 and YV-2105 HFP-VSL-00001/HFP-VSL-00005 headspace pressure - CTNs: PT-0052 and PT-2052 Waste Level - CTNs: **TBD** HOP Pressure - CTNs: **TBD** Setpoint values are **TBD** for MFPV headspace pressure, waste level, HOP pressure	(**TAC**) The glass former feed line isolation valves are capable of closing when the PPJ detects the activation of the following interlocks: • HFP-VSL-00001/ HFP-VSL-00005 headspace pressure glass former feed line isolation valve interlock • HFP-VSL-00001/ HFP-VSL-00005 waste level glass former feed line isolation valve interlock • HOP pressure glass former feed line isolation valve interlock		PCJ/PPJ operable Simulate conditions via PPJ
3.10.4.1	D	SU/COM	Demonstrate the PCJ remote control operations for all the listed HFP equipment/components on both melter lines. **<u>The following control functions (e.g., operate valves open/close, turn motors/pumps on/off) are performed by the PCJ:</u>** • ADS Pumps - CTNs: HFP-PMP-00001, -00002, -000014, and -00015. • Sample/Transfer Pumps - CTNs: HFP-PMP-00005A, -00005B, -00007, -00017, -00018A, and -00018B. • HLP Transfer Pumps - CTNs: HLP-PMP-00019A and HLP-PMP-00019B • MFPV Feed Diversion Valves - CTNs: YV-0103 and YV-2103 • MFV Transfer/Sample Recirc Line - Three Way Valves – CTNs: YV-0040, YV-0039, YV-2040, and YV-2039 • Glass Former Feed Isolation Valves - CTNs: YV-0105 and YV-2105 • Safety Air Control Valves - CTNs: YV-0903,YV-0931, YV-0904, and YV-0932 (HFP-RK-00016, 24590-HLW-M6-HFP-00009002), CTNs: YV-1003,YV-1031, YV-1004, and YV-1032 (HFP-RK-00017, 24590-HLW- M6-HFP-00010002), CTNs: YV-2903,YV-2931, YV-2904, and YV-2932 (HFP-RK-00018, 24590-HLW- M6-HFP-20009002), CTNs: YV-3003,YV-3031, YV-3004, and YV-3032 (HFP-RK-00019, 24590-HLW- M6-HFP-20010002) • Steam Ejectors - Steam Supply Valves – HFP-YV-0049, HFP-YV-0033, HFP-YV-2033, and HFP-YV-2049 • Mechanical Agitators - HFP-AGT-00001, HFP-AGT-00002, HFP-AGT-00004, and HFP-AGT-00005	(**GTC**) The in-cave HFP equipment shall be capable of being remotely operated/monitored.		PCJ operating HSH operating

Requirement (para #)	Test (T) or Demo (D)	SU or COM	Plan (including SSCs)	Acceptance Criteria (TAC or GTC)*	Notes/Comments	Test Conditions
			The following monitoring functions (parameters and status) are performed by the PCJ: Parameters (e.g., flow rate, speed, power, pressure) • HFP Vessels - Temperature Elements - CTNs: TE-0010, TE-2010, TE-0017, and TE-2017 • MFPVs - Pressure Indicators - CTNs: PT-0052, PT-2052 • MFVs - Pressure Indicators - CTNs: **TBD** • HFP Vessels - Level Detection - CTNs: LT-0050, LT-0051, LT-2050, and LT-2051 • Mechanical Agitator Speed Sensors - CTNs: HFP-ST-0062, HFP-ST-0063, HFP-ST-0701, HFP-ST-0801, HFP-ST-2062, HFP-ST-2063, HFP-ST-2701, and HFP-ST-2801 • Mechanical Agitator Power Sensors - CTNs: HFP-JT-0706, HFP-JT-0707, HFP-JT-0806, HFP-JT-0807, HFP-JT-2706, HFP-JT-2707, HFP-JT-2806, HFP-JT-2807 • Sample/Transfer - Flow Meters - CTNS: FE-0113, FE-0114, FE-2113, and FE-2114 • DIW System Supply Flow Meter - CTNs: FT-0651 and FT-2351 (24590-HLW-M6-PWD-00006001 and 24590-HLW-M6-PWD-20003001) • Sparger Tubes - Flow Meters: - HFP-VSL-00001 (MFPV) - Sparger Flow Meters - CTNs: FT-0912, FT-0913, FT-0914, FT-0915, FT-0916, FT-0917, FT-0918, and FT-0919 (HFP-RK-00016, 24590-HLW-M6-HFP-00009003/-00009004) - HFP-VSL-00002 (MFV) - Sparger Flow Meters - CTNs: FT-1012, FT-1013, FT-1014, FT-1015, FT-1016, FT-1017, FT-1018, and FT-1019 (HFP-RK-00016, 24590-HLW-M6-HFP-00010003/-00010004) - HFP-VSL-00005 (MFPV) - Sparger Flow Meters - CTNs: FT-2912, FT-2913, FT-2914, FT-2915, FT-2916, FT-2917, FT-2918, and FT-2919 (HFP-RK-00018, 24590-HLW- M6-HFP-20009003/-20009004) - HFP-VSL-00006 (MFV) - Sparger Flow Meters - CTNs: FT-3012, FT-3013, FT-3014, FT-3015, FT-3016, FT-30117, FT-3018, and FT-3019 (HFP-RK-00018, 24590-HLW- M6-HFP-20010003/-20010004) • Main Header Supply to Sparger Tubes - Flow Meters: - HFP-VSL-00001 (MFPV) - Sparger Main Header Flow Meters - CTNs: FT-0906, FT-0907, FT-0910, and FT-0911 (HFP-RK-00016, 24590-HLW-M6-HFP-00009002) - HFP-VSL-00002 (MFV) - Sparger Main Header Flow Meters - CTNs: FT-1006, FT-1007, FT-1010, and FT-1011 (HFP-RK-00017, 24590-HLW- M6-HFP-00010002) - HFP-VSL-00005 (MFPV) - Sparger Main Header Flow Meters CTNs: FT-2906, FT-2907, FT-2910, and FT-2911 (HFP-RK-00018, 24590-HLW- M6-HFP-20009002) - HFP-VSL-00006 (MFV) - Sparger Main Header Flow Meters - CTNs: FT-3006, FT-3007, FT-3010, and FT-3011 (HFP-RK-00019, 24590-HLW- M6-HFP-20010002) Status (go no-go, position valve open closed, motor on/off) • ADS Pumps - CTNs: HFP-PMP-00001, -00002, -000014, and -00015. • Sample/Transfer Pumps - CTNs: HFP-PMP-00005A, -00005B, -00007, -00017, -00018A, and -00018B. • HLP Transfer Pumps - CTNs: HLP-PMP-00019A and HLP-PMP-00019B • Glass Former Feed Isolation Valves - CTNs: YV-0105 and YV-2105 • MFPV Feed Diversion Valves - CTNs: YV-0103 and YV-2103 • HLP Transfer Pumps - CTNs: HLP-PMP-00019A and HLP-PMP-00019B • MFV Transfer/Sample Recirc Line - Three Way Valves – CTNs: YV-0040, YV-0039, YV-2040, and YV-2039 • Safety Air Control Valves - CTNs: YV-0903,YV-0931, YV-0904, and YV-0932 (HFP-RK-00016, 24590-HLW-M6-HFP-00009002), CTNs: YV-1003,YV-1031, YV-1004, and YV-1032 (HFP-RK-00017, 24590-HLW- M6-HFP-00010002), CTNs: YV-2903,YV-2931, YV-2904, and YV-2932 (HFP-RK-00018, 24590-HLW- M6-HFP-20009002), CTNs: YV-3003,YV-3031, YV-3004, and YV-3032 (HFP-RK-00019, 24590-HLW- M6-HFP-20010002) • ASX three-way valves (YV-3202, YV-3203, YV-3204, YV-3302, YV-3303, and YV-3304) in ASX system • Steam Ejector Steam Supply Valves – HFP-YV-0049, HFP-YV-0033, HFP-YV-2033, and HFP-YV-2049			

Requirement (para #)	Test (T) or Demo (D)	SU or COM	Plan (including SSCs)	Acceptance Criteria (TAC or GTC)*	Notes/Comments	Test Conditions
			• Mechanical Agitators - HFP-AGT-00001, HFP-AGT-00002, HFP-AGT-00004, and HFP-AGT-00005			
3.10.4.2	D	SU/COM	Demonstrate all PPJ monitoring and control functions are forwarded to the PCJ.	**(GTC)** PPJ monitoring and control functions are forwarded to the PCJ.	Recommended to be performed in conjunction with individual PPJ requirements.	PCJ/PPJ operating
3.10.4.4	T	SU/COM	Test automatic flushing operations post-transfer and post-sampling for each transfer/sampling line.	**(GTC)** HFP (pumps, valves, etc.) operate as intended, for the correct amount of time (i.e., to obtain correct flush volume), and return to a normal state at the conclusion of flushing. Automated flushes of the MFV to melter occur at **TBD** intervals.	Flush durations acceptance criteria need to be determined for each line in the test plan.	Integrated water runs
3.11.2.1.1	D	SU/COM	Demonstrate the air amplifiers are activated by the seismic signal will be performed in requirement 3.10.2.1.4 and maintain headspace negative relative to C3 ventilated areas which will be performed in requirement 3.11.3.1.1. CTNs: HFP-EJCT-00006, -00007, -00008, and -00009.	**(TAC)** The air amplifiers are automatically activated by the seismic shutdown signal.	This will be performed during the verification of requirement 3.10.2.1.4	See Requirement 3.10.2.1.4
3.11.3.1.1	D	SU/COM	Demonstrate the air amplifiers maintain negative pressure in the HFP vessels relative to the C3 zones when the facility is in seismic shutdown response mode. CTNs: HFP-EJCT-00006, -00007, -00008, and -00009.	**(GTC)** The air amplifiers maintain negative pressure in the HFP vessels relative to the C3 areas when the facility is in seismic shutdown response mode.		PPJ operating and monitoring SC ISA airflow PCJ operating and monitoring HFP vessel pressure SC ISA operating Demonstrate during post seismic conditions: All 4 amplifiers on, One vessel in emergency sparge mode Glass Former air supply line on. **(TBD)** Simulate broken supply lines into C3 areas.

Appendix B Descriptions of System Functional Flow and Interactions

Function: A.1	Receive/Store Treated HLW Concentrate
Detailed description: The HLW operator determines the size of the batch volume to be transferred. This function will align the valves in the transfer path to send the HLW waste stream to the selected melter train. The operator initiates the transfer and monitors for leaks and vessel levels in HLP and HFP melter feed preparation vessels (MFPV) (HFP-VSL-00001/00005). The transfer terminates when the level in the MFPV hits the expected height, when a line leak is detected, or when a volume balance mismatch occurs during transfer. A single line volume flush is processed forward to the MFPV followed by a two line volume transfer using demineralized water back to the PWD vessel in the PT Facility.	
Initiation: This function initiates when an HLW batch is determined by the operator to be ready and the HLW operator issues a permissive signal.	
Termination: This function terminates when the minimum volume of flush water has run through the transfer pipe from the PT Facility to the HLW Facility (See Function B.1).	
Parallel or sequential functions: Mixing by the agitators; idle air purging; vessel cooling; line flushing from the PT Facility PWD.	
Applicable Modes: Normal operations	

Function: A.2	Mix Treated HLW Concentrate
Detailed description: Mixing must occur before sampling in order to obtain a representative sample. The mechanical agitator mixes the waste for a predetermined amount of time. Additionally, the ISA provides idle purge airflow through the sparge tubes in order to agitate the waste and release trapped hydrogen gas from waste that settles on the bottom of the vessel. Upon loss of a mechanical agitator, the ISA provides air for emergency sparge mode (at least 42 scfm) intermittently to prevent an episodic release of hydrogen.	
Initiation: This function initiates during the HLW concentrate transfer to the MFPVs.	
Termination: This function does not terminate unless the agitator stops rotating due to operator action or a malfunction/accident.	
Parallel or sequential functions: Transfer of HLW concentrate to MFPVs; sampling of HLW concentrate.	
Applicable Modes: Normal operations; seismic DBE accident conditions	

Function: A.3	Sample Treated HLW
Detailed description: The operator chooses which MFPV and associated transfer pump to use in order to obtain a sample. Operational pre-checks are performed to ensure the system is ready to sample. The priming line valve in the chosen transfer/recirculation pump is opened allowing priming demineralized water to flow through the pump before the waste. The pump then recirculates waste through the auto sampler for a minimum of 10 minutes to get a representative sample. The ASX takes samples, which are then analyzed to determine the waste characteristics and provide the glass former recipe.	
Initiation: This function initiates after the MFPVs receive HLW concentrate and mix the waste for a predetermined amount of time.	
Termination: This function terminates after a predetermined amount of time upon completion of sampling.	
Parallel or sequential functions: Mixing by the agitators; idle air purging; vessel cooling; demineralized water addition to the MFPV via the ASX sample line flush	
Applicable Modes: Normal operations	

Function: A.4	Receive Glass Formers
Detailed description: The glass formers are added to the MFPV by the GFR. The process of composing a batch of glass formers is out of the scope of this document.	
Initiation: This function initiates after the Lab determines the glass former recipe based on ASX samples from either the initial HLW concentrate transfer or an already blended and resampled melter feed batch.	
Termination: This function terminates when the batch of glass formers are finished being added to the MFPV.	
Parallel or sequential functions: Mixing by the agitators; idle air purging; vessel cooling	
Applicable Modes: Normal operations	

Function: A.5	Mix Glass Formers and HLW Concentrate
Detailed description: The MFPV agitator is operating at all times and mixes the glass former batch with the treated HLW concentrate in order to obtain a representative sample. The agitator speed is used to determine the addition rate of the glass formers. The PCJ and PPJ monitor the agitator speed and power.	
Initiation: This function initiates when the glass formers are added to the MFPV.	
Termination: This function does not terminate unless the agitator stops rotating due to operator action or a malfunction/accident.	
Parallel or sequential functions: Mixing by the agitators; idle air purging; vessel cooling; and addition of demineralized water	
Applicable Modes: Normal operations; seismic DBE accident conditions	

Function: A.6	Sample HLW Melter Feed
Detailed description: Mixing must occur before sampling in order to obtain a representative sample. The operator chooses which MFPV and associated transfer pump to use in order to obtain a sample. Operational pre-checks are performed to ensure the system is ready to sample. The priming line valve in the chosen transfer/recirculation pump is opened allowing priming demineralized water to flow through the pump before the waste. The pump then recirculates waste through the autosampler for a minimum of 10 minutes to get a representative sample. The ASX takes samples which are then analyzed to determine the waste characteristics and provide the glass former recipe.	
Initiation: This function initiates after the MFPVs receive the glass former batch and mix the glass formers with the HLW concentrate for a predetermined amount of time in order to obtain a representative sample.	
Termination: This function terminates when the ASX flush valve is opened and directs a line flush of the recirculation line and transfer/recirculation pump.	
Parallel or sequential functions: Mixing by the agitators; idle air purging; vessel cooling; demineralized water addition to the MFPV via the ASX sample line flush	
Applicable Modes: Normal operations	

Function: A.7	Transfer HLW Melter Feed to MFVs
Detailed description: The MFPV transfers a batch of melter feed to the MFV at a rate of at least 44 gpm. The transfer begins by the operator determining the sending vessel (MFPV), the sample/transfer pump to be used, and the receiving vessel (MFV). Operational pre-checks are performed to ensure the system is ready to transfer. The operator then aligns the valves in the transfer route and enters the volume to be transferred into a flow totalizer. The priming line valve in the chosen transfer/sample pump is opened allowing priming demineralized water to flow through the pump before the waste. After a predetermined amount of time, the priming valve is closed and allows the HLW melter feed to be transferred to the MFV.	
Initiation: This function initiates once the MFPV HLW melter feed is within the acceptable limits for glass production.	
Termination: This function terminates when the approved batch volume has been transferred from the MFPV to MFV.	
Parallel or sequential functions: Mixing by the agitators; idle air purging; vessel cooling; and addition of demineralized water	
Applicable Modes: Normal operations	

Function: A.8	Receive/Store HLW Melter Feed
Detailed description: The MFV receives and stores a batch of melter feed from the MFPV. Operational pre-checks are performed to ensure the system is ready to transfer. The operator then aligns the valves in the transfer route and enters the volume to be transferred into a flow totalizer. The priming line valve in the chosen transfer/sample pump is opened allowing priming demineralized water to flow through the pump before the waste. After a predetermined amount of time, the priming valve is closed and allows the HLW melter feed to be transferred to the MFV.	
Initiation: This function initiates when an HLW melter feed batch is approved ready to transfer to the MFV.	
Termination: This function terminates when the approved batch volume has been transferred.	
Parallel or sequential functions: Mixing by the agitators; idle air purging; vessel cooling; and addition of demineralized water	
Applicable Modes: Normal operations	

Function: A.9	Mix HLW Melter Feed
Detailed description: The mechanical agitator mixes the waste in order to obtain a representative sample. Additionally, the ISA provides idle purge airflow through the sparge tubes in order to agitate the waste and release trapped hydrogen gas from waste that settles on the bottom of the vessel. Upon loss of a mechanical agitator, the ISA provides air for emergency sparge mode (at least 42 scfm) intermittently to prevent an episodic release of hydrogen.	
Initiation: This function initiates during the HLW melter feed transfer from the MFPV to the MFV.	
Termination: This function does not terminate unless the agitator stops rotating due to operator action or a malfunction/accident.	
Parallel or sequential functions: Mixing by the agitators; idle air purging; vessel cooling	
Applicable Modes: Normal operations; seismic DBE accident conditions	

Function: A.10	Transfer HLW Melter Feed to Melters
Detailed description: The ADS pumps constantly pump the melter feed into the melters. There are two ADS pumps per melter train. The pumps operate in cycles instead of both operating at the same time.	
Initiation: This function initiates when there is HLW melter feed in the MFV and the operator starts the transfer to the melter.	
Termination: This function terminates if a non-routine event interrupts operations or if the level in the MFV gets too low.	
Parallel or sequential functions: Mixing by the agitators; idle air purging; vessel cooling; addition of demineralized water for line flushing	
Applicable Modes: Normal operations	

Function: B.1	Flush HCP transfer line [**HOLD**]
Detailed description: The transfer piping from the PT Facility will be flushed after a waste transfer to HLW in order to prevent plugging. The flush water will be directed back to the PT Facility by a three-way valve once the line to the MFPV is flushed. The volume of water to be used for the flush is three times the line volume.	
Initiation: This function initiates after the HLW concentrate is transferred to the MFPV.	
Termination: This function terminates when the required flush volume of demineralized water has flowed through the transfer pipe.	
Parallel or sequential functions: N/A	
Applicable Modes: Normal, abnormal, and maintenance operations	

Function: C.1	Provide Vessel Overflow Path to a Sump
Detailed description: The HFP vessels are equipped with overflow lines. These lines will be used in the event that too much waste gets transferred from either the PT Facility HLP to the MFPV or the MFPV to the MFV. The overflow lines empty to a sump in the floor of the bermed area in the melter caves.	
Initiation: This function initiates when the volume of waste exceeds the normal operating levels and spills out of the HFP vessels into the melter cave.	
Termination: This function terminates when the vessel content level drops below the overflow line.	
Parallel or sequential functions: N/A	
Applicable Modes: Abnormal operations; seismic DBE accident conditions	

Function: D.1	Supply Demineralized Water
Detailed description: The PWD system provides demineralized water to the HFP vessels, spargers, and pumps. The demineralized water is used to prime the sample/transfer pumps in the HFP vessels. The demineralized water can be used to flush the spargers if they become plugged. The demineralized water is also used to dilute the waste in the HFP vessels if an out-of-specification waste sample is obtained.	
Initiation: This function initiates when the sample/transfer pumps are primed, to remove a sparge tube plug, or to dilute the vessel contents.	
Termination: This function terminates when the pumps are fully capable of producing the necessary head to pump waste, the sparge tube plug has been removed, or when the vessel contents are diluted and transferred out of the vessel.	
Parallel or sequential functions: N/A	
Applicable Modes: Normal, abnormal, and maintenance operations	

Function: D.2	Clean Empty HFP Vessels
Detailed description: The HFP vessels are washed using demineralized water and nitric acid, if needed, from the PWD and NAR systems. The washwater is processed forward to the melters during normal operations or transferred from the HFP vessels to the RLD using the steam ejectors during vessel decommissioning. The vessels are equipped with wash rings to allow decontamination.	
Initiation: This function initiates when the HFP vessels are determined to be in need of replacement.	
Termination: This function terminates when the HFP vessels are sufficiently decontaminated.	
Parallel or sequential functions: N/A	
Applicable Modes: Maintenance operations; decontaminating and decommissioning (D&D)	

Function: E.1	Flush Sample/Transfer Line [**HOLD**]
Detailed description: The HFP vessel sample recirculation loops, sample/transfer pumps, and transfer line from the MFPV to MFV are flushed using demineralized water to prevent the pumps and lines from plugging. The ASX initiates the flush and the water goes to the HFP vessels.	
Initiation: This function initiates after the ASX has obtained a representative sample of the HLW concentrate or when a transfer from MFPV to MFV is completed.	
Termination: This function terminates when sample/transfer line and pump have been flushed with the required amount of demineralized water.	
Parallel or sequential functions: N/A	
Applicable Modes: Normal operations	

Function: F.1	Transfer HFP Vessel Contents [**HOLD**]
Detailed description: The HFP vessel contents are removed and transferred to the other melter train either upon receipt of an out-of-spec batch sample analysis or to de-inventory the waste. Out-of-spec batch transfers are performed only when there is no capability to adjust the MFPV contents to achieve a conforming waste batch. De-inventory waste transfers are performed when a HFP vessel or melter becomes unavailable on one melter train.	
Initiation: This function initiates when the HLW melter feed batch is out-of-spec or if it needs to be de-inventoried.	
Termination: This function terminates when the transfer to the operating melter train is complete.	
Parallel or sequential functions: N/A	
Applicable Modes: Abnormal operations	

Function: G.1	Flush Melter Transfer Line [**HOLD**]
Detailed description: The transfer piping between the ADS pump in the MFV and the HLW melter will be flushed during and after transferring the melter feed. The ADS pumps will be flushed with demineralized water every 4 hours during a transfer. Demineralized water is also added during the feed transfer in order to lower the melter plenum temperature below 800 °C.	
Initiation: This function initiates intermittently during melter feed transfer to the HLW melter.	
Termination: This function terminates when the predetermined flush volume is transferred to the HLW melter.	
Parallel or sequential functions: Transferring HLW melter feed to the melters.	
Applicable Modes: Normal operations	

Function: H.1	Remove Washwater from the HFP Vessels
Detailed description: [HOLD] High pressure steam is supplied to the steam ejectors in the HFP vessels to allow for removal of the vessel contents during vessel decommissioning. The contents are transferred to RLD-VSL-00008. The volume of the transfer is specified by the operator. Then the available volume in RLD-VSL-00008 is determined. After that, the operator initiates the transfer. If the volume in the MFPV is low enough to allow dilution, the transfer will occur from the MFPV to RLD-VSL-00008. If the volume in the MFPV is too high, the waste will be pumped to the MFV, which will act as a dilution vessel. A limited amount of waste will be transferred to the MFV and then diluted and transferred to RLD-VSL-00008 by the steam ejectors. This will repeat until the volume in the MFPV is low enough to allow dilution. During normal operations, vessel washwater is processed forward to the melters with melter feed.	
Initiation: This function initiates when the vessels are washed for D&D, an out-of-spec batch is received, or in an unforeseen event needing the emptying of an HFP vessel.	
Termination: This function terminates when the transfer is complete.	
Parallel or sequential functions: N/A	
Applicable Modes: Abnormal and maintenance operations; D&D	

Function: I.1	Idle Air Purge to Vessel Spargers [**HOLD**]
Detailed description: The ISA provides idle purge airflow through the sparge tubes in order to agitate the waste and release trapped hydrogen gas from waste that settles on the bottom of the vessel. The air rises up through the waste and eventually gets ventilated from the vessel by the HOP and PVV. This aids in removing hydrogen from the headspace.	
Initiation: This function initiates when HLW concentrate is transferred to the HFP vessels.	
Termination: This function terminates temporarily when a loss of a mechanical agitator occurs or when the vessel contents are removed for any reason.	
Parallel or sequential functions: Transferring waste to the MFPV, MFV, and melter; mixing the waste with the agitator; adding glass formers.	
Applicable Modes: Normal operations; seismic DBE accident conditions where the mechanical agitators remain functioning	

Function: I.2	Emergency Air Sparging to Vessel Spargers [**HOLD**]
Detailed description: Upon loss of a mechanical agitator, the SC ISA provides air for emergency sparge mode (at least 42 scfm) intermittently to prevent an episodic release of hydrogen. Emergency sparging lasts for a predetermined amount of time and then the airflow drops back down to idle purge flow. The air rises up through the waste and eventually gets ventilated from the vessel by the HOP and PVV or the air amplifiers which vent to the melter cave. This aids in removing hydrogen from the headspace.	
Initiation: This function initiates when the mechanical agitators in the HFP vessels are not functioning for any reason. Emergency sparging is initiated after (time - **TBD**) before reaching the LFL.	
Termination: This function terminates when the mechanical agitator is functioning again.	
Parallel or sequential functions: None	
Applicable Modes: seismic DBE accident conditions where the mechanical agitators are not functioning	

Function: I.3	Supply air to control valves, instruments, ADS pumps, and air amplifiers
Detailed description: The ISA system provides air to the HFP control valves, instruments, ADS pumps, and air amplifiers. Air is used to provide the motive force to open/operate control valves, instruments, ADS pumps, and air amplifiers.	
Initiation: This function initiates when the PCJ/PPJ system transmits a signal to open/operate the control valves, instruments, ADS pumps, or air amplifiers.	
Termination: This function terminates when the PCJ/PPJ system transmits a signal to terminate operation/close the control valves, instruments, ADS pumps, or air amplifiers.	
Parallel or sequential functions: None	
Applicable Modes: Normal operations; seismic DBE accident conditions	

Function: I.4	Supply idle air to purge to MFPV GFR supply line
Detailed description: The ISA system provides continuous idle air to purge to MFPV GFR supply line. Air is used to prevent backflow of contamination from the MFPVs to the GFR during normal operation.	

Initiation: This function initiates when HLW concentrate is transferred to the HFP vessels.
Termination: This function terminates when the vessels are being decontaminated for removal and do not contain any waste or if vessel the contents temperature falls below the minimum operating temperature.
Parallel or sequential functions: Transferring waste to the MFPV, MFV, and melter; mixing the waste with the agitator; adding glass formers.
Applicable Modes: Normal operations; seismic DBE accident conditions

Function: J.1	Ventilate HFP Vessel Offgas
Detailed description: The HOP and PVV ventilate the HFP vessels to remove hydrogen from the headspace. The functions of the HOP/PVV are not included in the scope of this document. If the HOP/PVV goes offline for any reason, the vessel has air amplifiers and an overflow feature with a flapper valve that will be used to vent the vessel gases to the melter cave. The air amplifiers maintain negative pressure in the headspace and draw the air out. The overflow feature flapper valve is a passive device that opens when the pressure inside the vessel is greater than that of the melter cave and allows the headspace to vent to the melter cave and C5V. Demisters are used to prevent excessive moisture and aerosols from being carried out of the HFP vessels into the HOP HEPA filters.	
Initiation: This function initiates when the HFP vessels contain HLW concentrate or a blended batch of HLW melter feed. If the HOP/PVV is not operating, the air amplifiers activate and vent the headspace. The overflow feature flapper valve is passive and will initiate ventilation when the pressure in the headspace becomes positive.	
Termination: This function terminates when the vessels are empty.	
Parallel or sequential functions: Transferring waste to the MFPV, MFV, and melter; mixing the waste with the agitator; adding glass formers; providing idle purge and emergency sparge air	
Applicable Modes: Normal operations; seismic DBE accident conditions	

Function: K.1	Cool HFP Vessel Contents
Detailed description: The PCW provides cooling water to the HFP vessel cooling jackets. The cooling jackets remove radioactive decay heat and heat generated by the agitator motor. Water is constantly flowing through the cooling jackets as long as there is waste in the HFP vessels. The cooling water supplied to the jackets is in a secondary loop to reduce the probability of spreading radiation contamination to the Balance of Facilities.	
Initiation: This function initiates when the waste is transferred to the MFPVs and MFVs.	
Termination: This function terminates when the vessels are being decontaminated for removal and do not contain any waste or if vessel the contents temperature falls below the minimum operating temperature.	
Parallel or sequential functions: Transferring waste to the MFPV, adding glass formers to the MFPV, mixing the waste with the agitator and sampling the MFPV waste.	
Applicable Modes: Normal operations	

Function: L.1	Receive Electrical Power
Detailed description: Electrical power to the HFP equipment and instruments is supplied by the LVE.	
Initiation: This function initiates when the HLW Facility is in startup operations.	
Termination: This function terminates when HLW glass production operations are complete.	
Parallel or sequential functions: All	
Applicable Modes: All modes	

Function: M.1	PCJ - Normal Controls to Support Monitoring, Control, and Communication
Detailed description: Non-safety monitoring and control functions are supported by the PCJ. Components that are controlled automatically by the PPJ are also monitored by the PCJ during normal operations. The functions that are monitored and controlled by the PCJ are: • Measure the temperature, pressure, and level of the vessel contents • Measure the vessel headspace pressure • Operate valves for transferring and sampling • Communicate with the PT Facility to allow/terminate HLW concentrate transfers • Operate the mechanical agitators • Measure mechanical agitator power • **[HOLD]** Operate the sample/transfer pumps • **[HOLD]** Operate the ADS pumps • Monitor the airflow through the sparge tubes • **[HOLD]** Measure air sparger flow rate • Operate the steam supply to the steam ejectors • Operate the cooling water supply • Measure the cooling water flow rate • Measure the ASX sample line velocity • **[HOLD]** Operate safety air valves for spargers	
Initiation: This function initiates when the HLW Facility is in startup operations.	
Termination: This function terminates when HLW glass production operations are complete.	
Parallel or sequential functions: All	
Applicable Modes: Not credited for DBE	

Function: M.2	PPJ - Safety Instrumented Functions and Alarms to Support Monitoring, Control, and Communication
Detailed description: Automatic Safety monitoring and control functions are supported by the PPJ. The functions that are monitored and controlled by the PPJ are: • Terminate HLW concentrate transfers • Measure mechanical agitator speed and power • Monitor the airflow through the sparge tubes and switch from idle purge to emergency sparge mode • Operate safety air valves for sparging to transition from non-safety ISA to safety ISA • Seismic signal interlock	
Initiation: This function initiates when the HLW Facility is in startup operations.	
Termination: This function terminates when HLW glass production operations are complete.	
Parallel or sequential functions: All	
Applicable Modes: Abnormal	

Appendix C Active Safety Instruments and Functions

The listed instruments are designated as having active safety functions, implemented through interface with and programming in the PPJ system. Information in the table below reflects the current design of active safety instruments, including functions, and safety designations per the P&IDs and associated equipment and instrument lists. In some cases the current safety classification of the SSCs in design is known to exceed the design requirements. The information will be updated as needed to reflect changes to the design. The information below is provided in support of Plant Engineering and Operations and does not represent design requirements.

Function Title	Safety Designation	Sensors	Final Control Elements	Functional Description
Melter 1 Feed Prep Vessel High Level Interlocks - Train A	SC	HFP-LT-0050	HFP-YV-0105 via YC-0105B HFP-YV-0103 via YC- 0103B	High level closes valves.
Melter 1 Feed Prep Vessel High Level Interlocks - Train B	SC	HFP-LT-0111 HFP-DT-0008	HFP-YV-0105 via YC-0105C	High level close valve.
Melter 2 Feed Prep Vessel High Level Interlocks - Train A	SC	HFP-LT-2050	HFP-YV-2105 via YC-2105B HFP-YV-2103 via YC- 2103B	High level closes valves.
Melter 2 Feed Prep Vessel High Level Interlocks - Train B	SC	HFP-LT-2111 HFP-DT-2008	HFP-YV-2105 via YC-2105C	High level close valve.
Melter 1 Feed Vessel High Level Interlocks - Train A	SC	HFP-LT-0047	HFP-PMP-00005A & B via HFP-JY-0106A & 0107A	High level stops pumps.
Melter 1 Feed Vessel High Level Interlocks - Train B	SC	HFP-LT-0207 HFP-DT-0013	HFP-PMP-00005A & B via HFP-JY-0106B & 0107B	High level stops pumps.
Melter 2 Feed Vessel High Level Interlocks - Train A	SC	HFP-LT-2047	HFP-PMP-00018A & B via HFP-JY-2106A & 2107A	High level stops pumps.
Melter 2 Feed Vessel High Level Interlocks - Train B	SC	HFP-LT-2207 HFP-DT-2013	HFP-PMP-00018A & B via HFP-JY-2106B & 2107B	High level stops pumps.
Melter 1 Feed Prep Vessel Loss of Agitator / Sparge Interlock - Train A	SC	HFP-JT-0706 HFP-ST-0062	HFP-YV-0103 via YC-0103B HFP-YV-0105 via YC-0105B HFP-YV-0903 via YC-0903	Loss of agitation (speed or power) close valves -0103 and -0105 then after time **TBD**, open valve -0903 for **TBD**, then repeat.
Melter 1 Feed Prep Vessel Loss of Agitator / Sparge Interlock - Train B	SC	HFP-JT-0707 HFP-ST-0701	HFP-YV-0103 via YC-0103C HFP-YV-0105 via YC-0105C HFP-YV-0904 via YC-0904	Logic as above. YV-0904 is sparge valve.
Melter 2 Feed Prep Vessel Loss of Agitator / Sparge Interlock - Train A	SC	HFP-JT-2706 HFP-ST-2062	HFP-YV-2103 via YC-2103B HFP-YV-2105 via YC-2105B HFP-YV-2903 via YC-2903	Logic as above. YV-2903 is sparge valve.
Melter 2 Feed Prep Vessel Loss of Agitator / Sparge Interlock - Train B	SC	HFP-JT-2707 HFP-ST-2701	HFP-YV-2103 via YC-2103C HFP-YV-2105 via YC-2105C HFP-YV-2904 via YC-2904	Logic as above. YV-2904 is sparge valve.

Function Title	Safety Designation	Sensors	Final Control Elements	Functional Description
Melter 1 Feed Vessel Loss of Agitator / Sparge Interlock - Train A	SC	HFP-JT-0806 HFP-ST-0063	HFP-YV-1003 via YC-1003	Loss of agitation (speed or power), after time **TBD**, open valve -0903 for **TBD**, then repeat
Melter 1 Feed Vessel Loss of Agitator / Sparge Interlocks - Train B	SC	HFP-JT-0807 HFP-ST-0801	HFP-YV-1004 via YC-0104	Logic as above
Melter 2 Feed Vessel Loss of Agitator / Sparge Interlock - Train A	SC	HFP-JT-2806 HFP-ST-2063	HFP-YV-2003 via YC-1003	Loss of agitation, after time **TBD** minutes open valve YV-2003 for **TBD** minutes and repeat.
Melter 2 Feed Vessel Loss of Agitator / Sparge Interlocks - Train B	SC	HFP-JT-2807 HFP-ST-2801	HFP-YV-2004 via YC-0104	Loss of agitation (speed or power), after time **TBD** minutes open valve YV-2004 for **TBD** minutes and repeat.
Melter 1 Feed Prep Vessel Low Sparge Alarm - Train A	SC	YV-0903 FT-0907		When valve open if flow low - alarm.
Melter 1 Feed Prep Vessel Low Sparge Alarm - Train B	SC	YV-9003 FT-0906		As above
Melter 2 Feed Prep Vessel Low Sparge Alarm - Train A	SC	YV-2903 FT-2907		As above
Melter 2 Feed Prep Vessel Low Sparge Alarm - Train B	SC	YV-2904 FT-2906		As above
Melter 1 Feed Vessel Low Sparge Alarm - Train A	SC	YV-1003 FT-1007		As above
Melter 1 Feed Vessel Low Sparge Alarm - Train B	SC	YV-1004 FT-1006		As above
Melter 2 Feed Vessel Low Sparge Alarm - Train A	SC	YV-3003 FT-3007		As above
Melter 2 Feed Vessel Low Sparge Alarm - Train B	SC	YV-3004 FT-3006		As above
Melter 1 Feed Prep Vessel Low Purge Interlocks - Train A	SC	FT-0911	YV-0931	Low flow open valve
Melter 1 Feed Prep Vessel Low Purge Interlocks - Train B	SC	FT-0910	YV-0932	Low flow open valve
Melter 2 Feed Prep Vessel Low Purge Interlocks - Train A	SC	FT-2911	YV-2931	Low flow open valve
Melter 2 Feed Prep Vessel Low Purge Interlocks - Train B	SC	FT-2910	YV-2932	Low flow open valve
Melter 1 Feed Vessel Low Purge Interlocks - Train A	SC	FT-1011	YV-1031	Low flow open valve
Melter 1 Feed Vessel Low Purge Interlocks - Train B	SC	FT-1010	YV-1032	Low flow open valve
Melter 2 Feed Vessel Low Purge Interlocks - Train A	SC	FT-3011	YV-3031	Low flow open valve
Melter 2 Feed Vessel Low Purge Interlocks - Train B	SC	FT-3010	YV-3032	Low flow open valve
Melter 1 PVV/PVP Pressure Interlocks	SS	PT-0052	YV-0105	Low of vacuum close valve
Melter 2 PVV/ PVP Pressure Interlocks	SS	PT-2052	YV-2105	Loss of vacuum close valve

Function Title	Safety Designation	Sensors	Final Control Elements	Functional Description
Auto sampler ASX-SMPLR-00029 High Level Interlocks - Train A	SC	From ASX System – LT-3240	HFP-PMP-00005A & B via HFP-JY-0106A & 0107A HFP-PMP-00007 via JY-0201A	On detection of high level stop pumps.
Auto sampler ASX-SMPLR-00029 High Level Interlocks - Train B	SC	From ASX System – LT-(**TBD**)	HFP-PMP-00005A & B Via HFP-JY-0106B & 0107B HFP-PMP-00007 via JY-0201B	On detection of high level stop pumps.
Auto sampler ASX-SMPLR-00042 High Level Interlocks - Train A	SC	From ASX System – LT-3340	HFP-PMP-00018A & B via HFP-JY-2106A & 2107A HFP-PMP-00017 via JY-02203A	On detection of high level stop pumps.
Auto sampler ASX-SMPLR-00042 High Level Interlocks - Train B	SC	From ASX System – LT-(**TBD**)	HFP-PMP-00018A & B via HFP-JY-2106B & 2107B HFP-PMP-00017 via JY-2203B	On detection of high level stop pumps.
Auto sampler ASX-SMPLR-0029 Flush valve interlock position 4	SS	ASX-ZSH-3202 HFP-IT-0118	HFP-PMP-0005A via JY-0106B	If pump running and auto sampler in position, stop pump.
Auto sampler ASX-SMPLR-0029 Flush valve interlock position 5	SS	ASX-ZSL-3203 HFP-IT-0119	HFP-PMP-0005B via JY-0107B	If pump running and auto sampler in position stop pump.
Auto sampler ASX-SMPLR-0029 Flush valve interlock position 6	SS	ASX-ZSL-3204 HFP-IT-0208	HFP-PMP-0007 via JY-0203B	If pump running and auto sampler in position stop pump.
Auto sampler ASX-SMPLR-0042 Flush valve interlock position 4	SS	ASX-ZSH-3302 HFP-IT-2118	HFP-PMP-00018B via JY-2106A	If pump running and auto sampler in position stop pump.
Auto sampler ASX-SMPLR-0042 Flush valve interlock position 5	SS	ASX-ZSL-3303 HFP-IT-2119	HFP-PMP-0018A via JY-2107A	If pump running and auto sampler in position stop pump.
Auto sampler ASX-SMPLR-0042 Flush valve interlock position 6	SS	ASX-ZSL-3304 HFP-IT-2208	HFP-PMP-0017 via JY-2203A	If pump running and auto sampler in position stop pump.
Seismic Isolation Interlocks Train A	SC	Sensors - part of seismic system. Manual activation	1. Open air amplifier valves YV-0925, 1025, 2925 and 3025. 2. Close HFP GFR valve YV-0105 3. Valves YV-0903, 0904,1003 and 1004	Actions on valves listed as item 1 and 2 are immediate, following activation. Actions on valves listed in 3 are delayed **TBD** hours and then each valve in turn opened for a fixed time **TBD**, then repeat every **TBD** hours.
Seismic Isolation Interlocks Train B	SC	Sensors - part of seismic system. Manual activation	1. Open air amplifier valves YV-0928, 1028, 2928 and 3038. 2. Close HFP GFR valve YV-2105 3. Valves YV-2903, 2904, 3003 and 3004	As above

Notes:
Many of the instruments above are located on instrument racks. These include: HFP-RK-0003, 0005, 0006, 0009 and 0013.

Appendix D -Reserved-System Procedures

Appendix E -Reserved-System History

HLW Melter Process System (HMP) System Design Description

Document title:

Document number: 24590-HLW-3ZD-HMP-00001

Revision number: A

Type: ☒ System Design Description
☐ Facility Design Description

Originator(s): Jason Appleby

Checked by: Phillip Townsend

Checker's signature: _____ 7-14-15
Signature *Date*

Concurrence: Mark Johnson

Concurrence signature: _____ for M. Johnson 9/8/15
Manager of Production Engineering Signature *Date*

Concurrence: Ian Milgate

Concurrence signature: _____ 9/9/15
Project Technical Director and Design Authority Signature *Date*

Approved by: Natalie Harkey

Approver's position: Systems Engineering Manager

Approver's signature: _____ 9/9/2015
Signature *Date*

Validation

Signatures below indicate acceptance of the requirements established in Section 3 as the complete and correct set of requirements for the system relative to the requirements for this system relative to the requirement sources for which the Requirement Developer is responsible.

Appl.	Requirement Area	Requirement Developer	Signature	Date
☐	Architectural Design			
☐	Civil/Structural Design			
☒	Controls & Instrumentation Design	WAYNE UNDERHILL		6/3/15
☒	Electrical Design & AHJ	Gary E. Lucke		6/8/15
☒	Fire Protection Engineering	BEN JOHNSON		6/8/15
☐	HVAC Design			
☒	Mechanical Handling Design	JULIAN LEAM		06.04.15
☒	Mechanical Systems Design	JULIAN LEAM		06.04.15
☒	Plant Design	Travis Vreeland		6/3/15
☒	Process Engineering	Robert Volkman		6/9/15
☐	Interface (External)			
☐	Interface (Internal)			
☒	System Functions and Requirements	P. Townsend		6-12-15
☒	Equipment Environmental Qualification	GOVIND RAJAGOPAL		6-11-15
☒	Materials Engineering / Technology	Grant Mard		6-8-15
☐	Plant Software Design			
☒	Environmental ~~Permitting~~ (ESH) 6/10/15	Roger J. London		6/12/15
☐	Fire Safety (ESH)			
☒	Nuclear Safety Engineering 6/4/15	Scott Manley		6/4/15
☐	Criticality Safety			
☒	Radiological Engineering	Steven Wahlquist		6/4/15
☐	Industrial Safety/Hygiene (ESH)			
☒	Mission (WTP Contract functional/performance rqmts)	Brian Gifford		6-4-15
☒	Operations Requirement Document	for Dan Rowland by email		6/4/15
☒	Quality Assurance	VDC-Washoff		6/3/15
☐	Safeguards & Security			
☐	Startup			
☐	Transportation & Logistics			

* Validation not required for alpha/preliminary design description documents.

History Sheet

Rev	Reason for revision	Revised by
A	Initial issue. Supersedes 24590-HLW-3YD-HMP-00001, Rev. 5, *System Description for the HLW Melter Process System (HMP)*	J. Appleby

Contents

Validation ii

History Sheet iii

1 Introduction 1

1.1 System Identification 1

1.2 Limitations and Scope 1

1.3 Ownership and Maintenance 2

1.4 Definitions/Glossary 2

1.5 Acronyms and System Designators 2
1.5.1 Acronyms 2
1.5.2 System Designators 4

2 General Overview 5

2.1 System Functions/Safety Functions 9

2.2 System Classification 13

2.3 Basic Operational Overview 13

3 Design Requirements 14

3.1 Requirements 14

3.2 Bases 14

3.3 References 14

3.4 General Requirements 15
3.4.1 Mission and Functional / Performance Requirements (Including States/Modes) 15
3.4.2 Nuclear Safety, ALARA, Environmental, and Regulatory Requirements 20
3.4.3 System Interface Requirements 24
3.4.4 Other Technical, Specialty, Operations and Maintenance Requirements 25

3.5 Melter Requirements 28
3.5.1 Mission and Functional/Performance Requirements (Including States/Modes) 28
3.5.2 Nuclear Safety, ALARA, Environmental, and Other Regulatory Requirements 31
3.5.3 System Interface Requirements 32
3.5.4 Other Technical, Specialty, Operations and Maintenance Requirements 32

3.6 Discharge Chamber Requirements 34
3.6.1 Mission and Functional/Performance Requirements (Including States/Modes) 34
3.6.2 Nuclear Safety, ALARA, Environmental, and Other Regulatory Requirements 35
3.6.3 System Interface Requirements 35
3.6.4 Other Technical, Specialty, Operations and Maintenance Requirements 35

3.7 Electrical Requirements 36
3.7.1 Mission and Functional/Performance Requirements (Including States/Modes) 36
3.7.2 Nuclear Safety, ALARA, Environmental, and Other Regulatory Requirements 37
3.7.3 System Interface Requirements 38
3.7.4 Other Technical, Specialty, Operations and Maintenance Requirements 40

3.8 Piping Requirements 41
3.8.1 Mission and Functional/Performance Requirements (Including States/Modes) 41
3.8.2 Nuclear Safety, ALARA, Environmental, and Other Regulatory Requirements 43

3.8.3 System Interface Requirements 44
3.8.4 Other Technical, Specialty, Operations and Maintenance Requirements 45

3.9 Monitoring and Controls 46
3.9.1 Mission and Functional/Performance Requirements (Including States/Modes) 46
3.9.2 Nuclear Safety, ALARA, Environmental, and Other Regulatory Requirements 51
3.9.3 System Interface Requirements 53
3.9.4 Other Technical, Specialty, Operations and Maintenance Requirements 54

3.10 Relevant Codes and Standards 56
3.10.1 Codes of Record 56
3.10.2 WTP Design Criteria, Design Guides, and General Specifications 59

4 System Description 63

4.1 Configuration Information 63
4.1.1 Description of System, Subsystems, and Major Components 64
4.1.2 Boundaries and Interfaces 99
4.1.3 Physical Layout and Location 102
4.1.4 Principles of Operation 103
4.1.5 System Reliability Features 105
4.1.6 System Control Features 105

4.2 Operations 123
4.2.1 Initial Configuration (Pre-Startup) 123
4.2.2 System Startup 123
4.2.3 Normal Operations 123
4.2.4 Off-Normal Operations 123
4.2.5 System Shutdown 123
4.2.6 Safety Management Programs and Administrative Controls 124

4.3 Testing and Maintenance 124
4.3.1 Temporary Configurations 124
4.3.2 TSR-Required Surveillance 124
4.3.3 Non-TSR Inspections and Testing 124
4.3.4 Maintenance 124

4.4 Supplemental Information 124

5 References and Design Documents List 125

5.1 Source / Basis References 125

5.2 Other References 125

5.3 System Design Documents 127

Appendices

Appendix A - Test Objectives, Conditions, and Acceptance Criteria A-1

Appendix B - Descriptions of System Functional Flow and Interactions B-1

Appendix C - Active Safety Instruments and Functions C-1

Appendix D - Reserved - System Procedures D-1

Appendix E – Reserved - System History E-1

Tables

Table 2-1 – Functional Analysis and Crosswalk to Requirements 11
Table 3-1 – HMP Equipment and Components Design Life 16
Table 3-2 – HMP Seismic Design Categories 19
Table 3-3 – HMP Safety Designations 20
Table 3-4 – HMP System Interfaces 25
Table 3-5 – HLW HMP Applicable Codes and Standards 57
Table 3-6 - WTP Design Criteria, Design Guides, and General Specifications Applicable to HMP 59
Table 4-1 – Melter Ports 68
Table 4-2 – Electrical Power and Electrical Signal Connections 68
Table 4-3 – Melter Nozzles, Fluid Services and Associated Ports 69
Table 4-4 – Summarized Service Flows and Air In-leakage for HLW Melter 86
Table 4-5 – Locations of Glass and Plenum Thermocouples in the Lid-Mounted Thermowells 88
Table 4-6 – Melter 1 System Monitoring 105
Table 4-7 – System Controls 115
Table 4-8 – Automatic and Manual Actions 117
Table 4-9 – Safety Interlocks 123

Figures

Figure 2-1 –Context Diagram 7
Figure 2-2 –HMP Simplified System Diagram 8
Figure 2-3 – Functional Block Diagram 10
Figure 4-1 – HLW Melter System Simplified Diagram 63
Figure 4-2 – HLW Melter Sectional View along North-South Axis at Discharge Riser 65
Figure 4-3 – Isometric View of HLW Melter 66
Figure 4-4 – Simplified HLW Melter P&ID 71
Figure 4-5 – Plan View of HLW Melter Showing Nozzles and Lid Ports 72
Figure 4-6 – Melter Wall Module 73
Figure 4-7 – Melter Glass Pool Refractory 75
Figure 4-8 – Melter Plenum Refractory 76
Figure 4-9 – Elevation View of HLW Melter Showing Cooling Panels and Piping 77
Figure 4-10 – Left-Hand Jackbolt Actuator 79
Figure 4-11 – Melter Base and Transport Wheels 79

Figure 4-12 – HLW Melter Seismic Restraint 81
Figure 4-13 – Melter Lid 82
Figure 4-14 – Typical Fluid Service Connection to Lid Component 84
Figure 4-15 – Piping Design for Standby Offgas Spool Piece 85
Figure 4-16 – East Electrode Assembly 87
Figure 4-17 – Thermowell and Thermocouple Probe 89
Figure 4-18 – HLW ADS Pump Cycle 90
Figure 4-19 – HLW ADS Pump Assembly 91
Figure 4-20 – HLW Feed Nozzle Assembly 92
Figure 4-21 – Melter Level Detector Assembly 94
Figure 4-22 – Melter Discharge Riser, Trough and Glass Dam 95
Figure 4-23 – Discharge Lid Assembly with Heaters 96
Figure 4-24 – Installation of Pour Spout and Drip Tray Assembly 97
Figure 4-25 – IR Image of Glass Level in HLW Canister 98
Figure 4-26 – Glass Bubbler Assembly 99

1 Introduction

1.1 System Identification

This system design description (SDD) defines the technical and functional/performance requirements of the high-level waste (HLW) melter process system (HMP). This document details the authorization basis requirements of the HMP system as they are currently known and understood. This SDD describes the functional requirements of the HMP system, including the following:

- Services and utility requirements, operating materials and supplies, and other external interfaces
- Operations limits and design bases
- Other criteria and requirements pertinent to the design of the HMP system

The HLW melter process system converts blended slurry of waste concentrate and glass forming chemical additives from HLW melter feed process system (HFP) into molten glass. The system delivers the molten glass to stainless steel canisters. The molten material is then allowed to cool, forming a highly durable borosilicate glass waste form. Immobilized high-level waste (IHLW) is the resulting product. The boundaries, system interfaces, and functional description of the HMP system are provided in Sections 2, 3.4.3, 3.5.3, 3.7.3, 3.8.3, and 3.9.3.

1.2 Limitations and Scope

The scope of this document is to provide an authoritative source for the collected set of requirements applicable to the HMP system, inclusive of interface requirements with other systems. The SDD scope is limited to HMP system features that support production and/or protect equipment, personnel, and the environment. The SDD is prepared in accordance with 24590-WTP-3DP-G04B-00093, *System and Facility Design Descriptions*. The intended use of these collected requirements is to establish the following:

- Inform the HMP system design effort
- Provide a validated basis upon which to confirm implementation of design requirements
- Provide the expected means of verification for requirements, including those that are post-construction (i.e., startup and commissioning test objectives and acceptance criteria)

All requirements established in this document are intended to be verified and implemented in design and/or physical configuration using a graded approach commensurate with importance and risk.

Where numeric values are provided within requirements in Section 3, these values are provided without additional margin. For example if a value is established in the Basis of Design, no attempt is made to remove any margin that may or may not have gone into the establishment of that value, neither has any margin been added. Where values are stated as minimums or maximums, there is no expectation that additional margin is applied in the verifications that the design requirements have been met. Testing that is required to be performed in accordance with external codes and standards must follow the rules established in those documents.

This document is intended to be used in support of design development, design verification, turnover, startup testing, and commissioning activities. This document will be maintained current relative to changes in source requirements documents. Updates shall be made concurrent with these changes to source requirements, or implementation shall be tracked for completion in accordance with 24590-WTP-GPG-ENG-0170, *Impact Evaluation*.

Engineers are expected to be able to use the requirements in Section 3 of this document as input for design development without recourse to the upper-tier source documents or searches of the Design Criteria Database (Technical Requirements Management System). Design engineers are still required to ensure that requirements contained with the discipline/functional standards incorporated by reference in Section 3 are followed. These documents contain additional criteria that are based on applications of external codes/standards, corporate best practices, and engineering management expectations for a consistent approach to design.

Certain requirement statements in this document are preceded by a "**[HOLD]**" notation. This notation is used when there are unresolved technical issues, known inconsistencies among source requirements, or other management suspensions of work requiring resolution. Requirements with the "**[HOLD]**" notation may be used to proceed with preliminary or committed design (with inclusion of appropriate holds) but shall not be used in support of fabrication or construction until the "**[HOLD]**" is removed.

The contents of section 4 are being developed in a phased approach in support of future operations and maintenance. At this revision, only the contents of sections 4.1.1 through 4.1.4 and 4.1.6 have been updated and verified. Sections 4.1.5, 4.2, 4.3 and 4.4 are currently reserved and will be updated in a later phase.

Additional Appendices may be added in the future as needed.

1.3 Ownership and Maintenance

The Design Authority (DA) organization is responsible for the preparation and maintenance of this document through turnover of the included systems to Operations. Thereafter, maintenance of this document is the responsibility of the Plant Engineering organization; however, the Engineering DA organization retains responsibility for the establishment and definition of design requirements.

1.4 Definitions/Glossary

Confinement: For consistency, regardless of usage elsewhere, confinement is used in this document to denote the controls used to prevent or minimize the release or migration of airborne contaminants, including aerosols, hazardous vapors, or gases.

Containment: For consistency, regardless of usage elsewhere, containment is used in this document to denote the controls used to prevent or minimize the release or migration of liquid or liquid-entrained contaminants.

Primary confinement / containment. The structures, systems, or components (SSCs) and their associated boundaries that confine or contain airborne and liquid contaminants under normal conditions.

Secondary confinement / containment. The structures or other design features that capture and prevent further spread or migration of airborne or liquid contaminants after they have escaped primary confinement or containment.

1.5 Acronyms and System Designators

1.5.1 Acronyms

ADS Air Displacement Slurry

AISC	American Institute of Steel Construction
ALARA	As Low As Reasonably Achievable
ANSI	American National Standards Institute
ASD	Allowable Stress Design
ASME	American Society of Mechanical Engineers
ASTM	American Society for Testing and Materials
AWG	American Wire Gauge
AWS	American Welding Society
AZS	Alumina-Zirconia-Silica (brick)
BNI	Bechtel National, Inc.
BOD	Basis of Design
CCTV	Closed Circuit Television Video
CFR	Code of Federal Regulation
cm	Centimeter
CM	Commercial Material
CMTR	Certified Material Test Report
COM	Commissioning
CON	Construction
DBE	Design Basis Earthquake
DOE	US Department of Energy
DPD	Design Proposal Drawing
DVR	Design Verification Report
DSA	Documented Safety Analysis
DWP	Dangerous Waste Permit
ENG	Engineering
EQ	Environmental Qualification
EQP	Equipment Qualification Package
FCR	Facility Control Room
FM	Factory Mutual
GFC	Glass Forming Chemical
GTC	General Test Criteria
GRE	Grounding and Lighting Protection Electrical System
HLW	High-Level Waste
HVAC	Heating, Ventilation, and Air Conditioning
IBC	International Building Code
IHLW	Immobilized High-Level Waste
I/O	Input/Output
in WC	Inch Water Column
IEEE	Institute of Electrical and Electronic Engineers, Inc.
kV	Kilovolt
LAW	Low Activity Waste
LOTO	Lockout/Tagout
mA	milliamps
MFV	Melter Feed Vessel
MTG	Metric Tons of Glass
MTR	Material Test Report
NEC	National Electrical Code
NEMA	National Electrical Manufacturers Association
NFPA	National Fire Protection Association
NICD	Not in Current Design
NPH	Natural Phenomena Hazard

NOC	Notice of Construction
NSE	Nuclear Safety Engineering
O&M	Operations and Maintenance
ORD	Operations Requirements Document
ORP	Office of River Protection
PAM	Post Accident Monitoring
P&ID	Piping and Instrumentation Diagram
PDI	Pressure Differential Indication
PDT	Pressure Differential Transmitter
PDSA	Preliminary Documented Safety Analysis
PFD	Process Flow Diagram
QAM	Quality Assurance Manual
REC	Receiving
ROIN	Requirement Object Identification Number
RPP	River Protection Project
S	Siemens
SBS	Submerged Bed Scrubber
SC	Safety Class
SDD	System Design Description
SDS	Safety Design Strategy
SIF	Safety Instrumented Function
SPS	Static Power Supply
SQR	Supplier Quality Representative
SRD	Safety Requirements Document
SS	Safety Significant
SSC	Structures, Systems, or Components
SSRS	Safety System Requirements Specification
SU	Startup
SUB	Subcontractor
SUP	Supplier
TAC	Test Acceptance Criteria
TBD	To Be Determined
TOC	Total Organic Carbon
TRU	Transuranic Elements
UL	Underwriters Laboratory
V	Volt
WAC	Washington Administrative Code
WT	Weight
WT%	Weight Percent
WTP	Hanford Tank Waste Treatment and Immobilization Plant

1.5.2 System Designators

C5V	C5 Ventilation System
DIW	Demineralized Water System
GRE	Grounding and Lightning Protection Electrical System
HFP	High-Level Waste Melter Feed Process System
HMH	High-Level Waste Melter Handling System
HMP	High-Level Waste Melter Process System
HOP	High-Level Waste Offgas Treatment Process System

HPH	High-Level Waste Canister Pour Handling System
HSH	High-Level Waste Cave Support Handling System
ISA	Instrument Service Air System
LVE	Low Voltage Electrical (480/208/120V) System
MVE	Medium Voltage Electrical (13.8/4.16kV) System
MXG	Miscellaneous Gases System
PCJ	Process Control System
PCW	Plant Cooling Water System
PPJ	Programmable Protection System
PTJ	Process and Mechanical Handling CCTV System

2 General Overview

The high-level waste (HLW) melter process system (HMP) consists of two identical joule-heated melters. Each melter is connected to a dedicated feed vessel and offgas system.

The HLW HMP converts blended slurry of waste concentrate and glass forming chemical additives into molten glass. The HMP system begins at the melter feed nozzles where it receives blended melter feed from the HFP system melter feed vessel and ends as the molten glass exits the melter discharge chamber. After exiting the discharge chamber, the glass moves through the pour spout beneath the melter cave and into the immobilized high-level waste (IHLW) waste canisters which are handled by the HLW canister pour handling (HPH) system. Power for the HMP system is provided by the plant low voltage electrical (LVE) system and the medium voltage electrical (MVE) system. The LVE system provides power to the melter discharge heater power supplies and the startup heater power supplies. The MVE system provides power to the melter electrode power supplies. The off gases produced from the HLW melters are treated by the melter offgas treatment process system (HOP). The HOP system also maintains a vacuum on the melter plenum. The HMP boundary for the offgas is the opening in the melter lid where off gases exit to the HOP system.

Each melter is located on a + 3 foot slab above the 0 foot elevation, with melter 1 (HMP-MLTR-00001) located in the melter cave No. 1 room H-0117 and melter 2 (HMP-MLTR-00002) located in melter cave No. 2 room H-0106. There is no personnel access to the melter caves after processing of radioactive feed begins. The melter discharge power supplies (LVE-PSUP-30002 and LVE-PSUP-30009) and melter startup heaters (LVE-PSUP-30003 and LVE-PSUP-30010) are located in corridors HC0207 and HC0203. The melter electrode power supplies (MVE-PSUP-30001 and MVE-PSUP-30003) are located at the -21 ft elevation in rooms H-B020 and H-B004.

There are four main compartments to each melter: a glass tank, two discharge chambers, and the melter plenum. The glass tank is a five-sided open top box that is lined with refectory material designed to withstand corrosion from molten glass. The plenum is the space above the glass pool within the melter. The plenum is lined with refractory material to withstand hot corrosive gases, thermal shock, and glass and feed splatter. The discharge chambers are insulated heated chambers attached to the south side of the melter. The discharge chambers house troughs for directing molten glass delivered from the glass pool into the canisters.

The melter lid structure supports the lid refractory and provides location and structural support for connection loads such as offgas ductwork, feed tubes, startup heaters, bubblers, thermowells, and other items servicing the melter through ports in the lid.

Figure 2-1 provides the contextual depiction of the HMP system in terms of its primary interrelationships with other systems and utilities. These figures are used in support of functional and performance definition at the system level. Figure 2-2 provides a process flow diagram of the overall HMP system. Blue lines are used in these figures to highlight the primary flow path of the HMP system and black lines illustrate the supporting systems and utilities. See Section 1.5 for the list of relevant system designators.

Figure 2-1 –Context Diagram

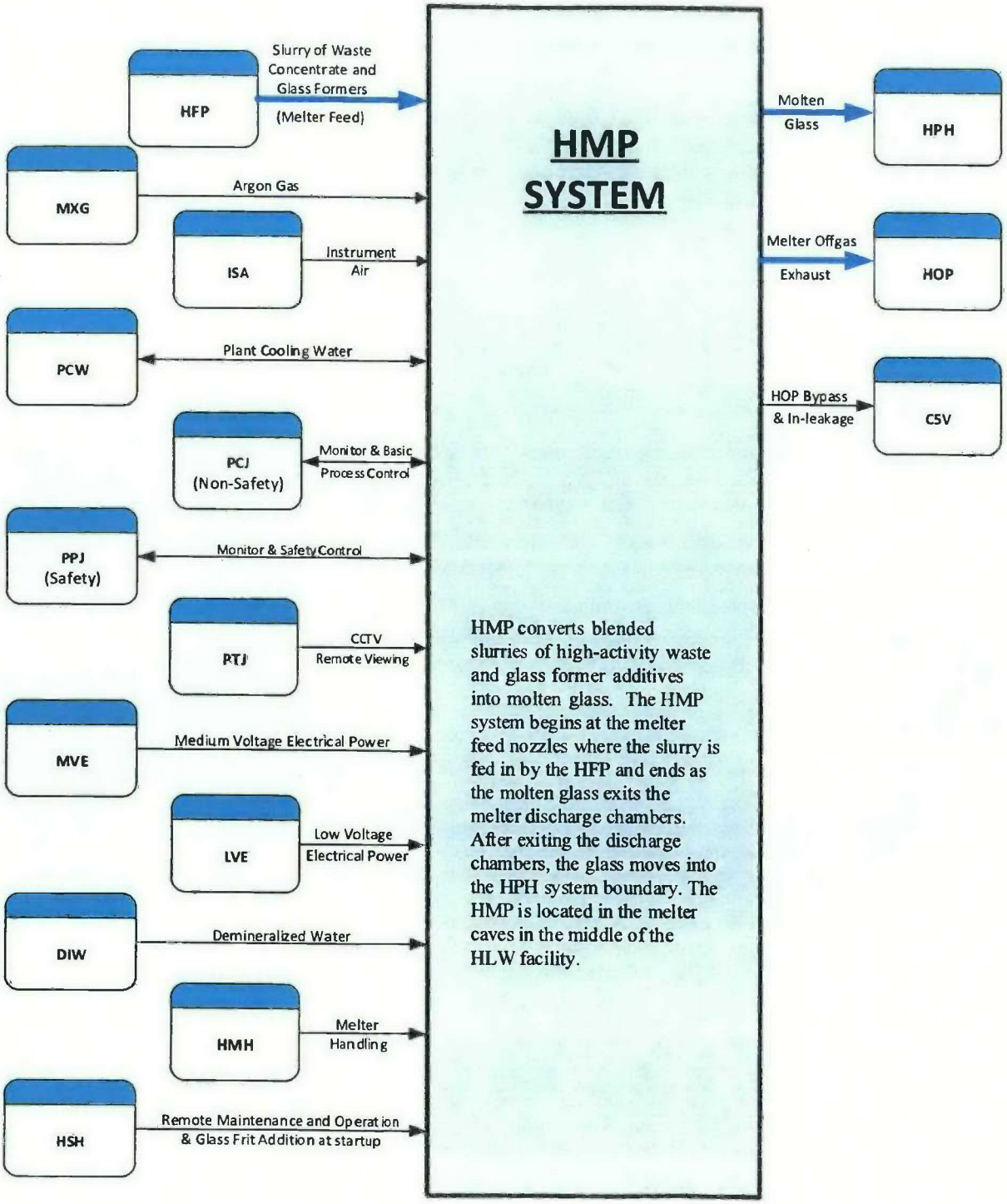

Figure 2-2 –HMP Simplified System Diagram

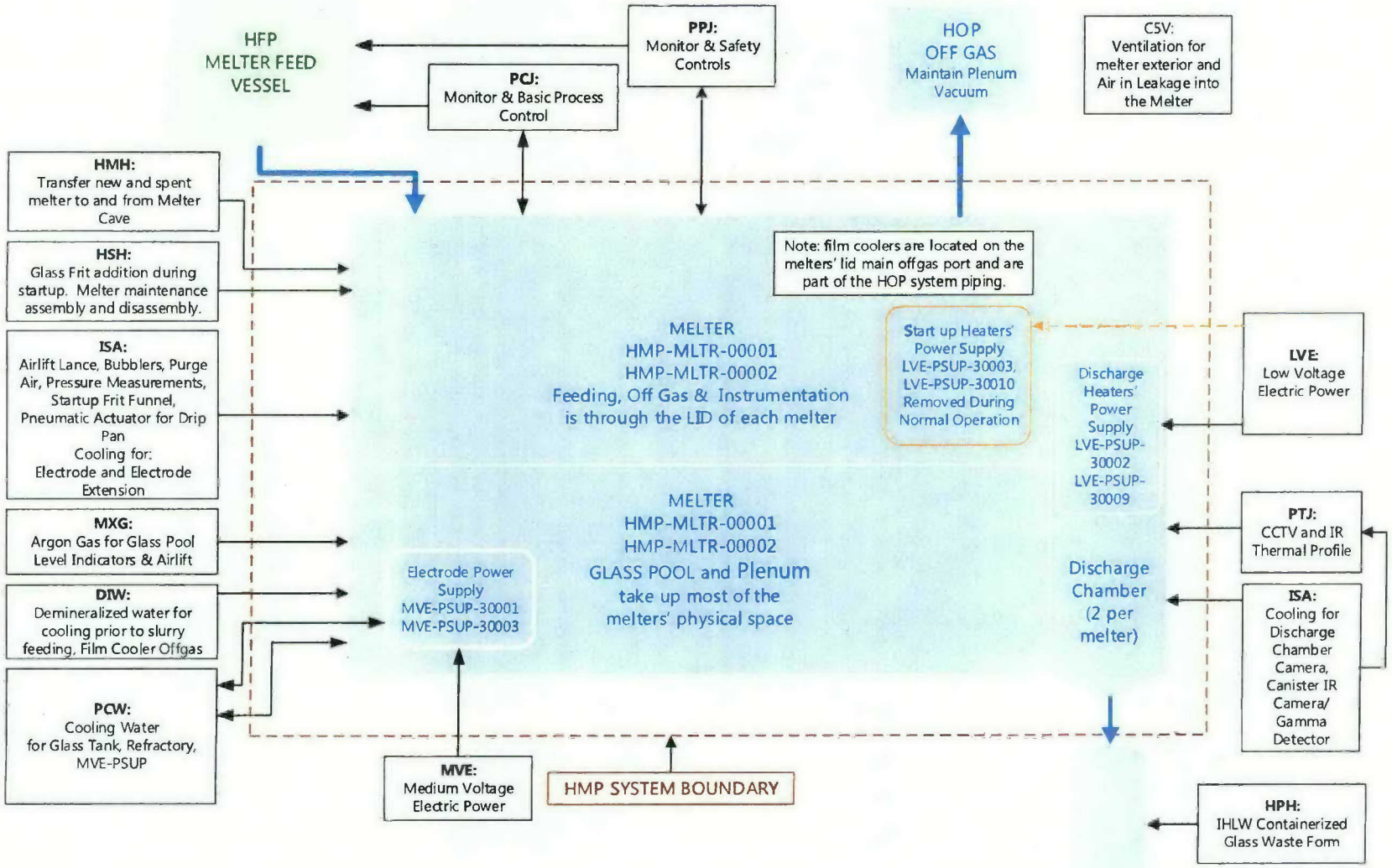

2.1 System Functions/Safety Functions

This section defines the HMP functions and attributes that need to be addressed by the system design. Figure 2-3 provides the functional block diagram for the HMP system, indicating the internal and external systems and utilities that provide the primary support or interface for that function. Section 3 provides the design and performance requirements to meet both functional and other requirements.

System interfaces are provided for reference only. See Section 1.5 for the list of relevant systems designators.

Figure 2-3 – Functional Block Diagram

Note: Functions A.2 – A.6 interact and take place simultaneously

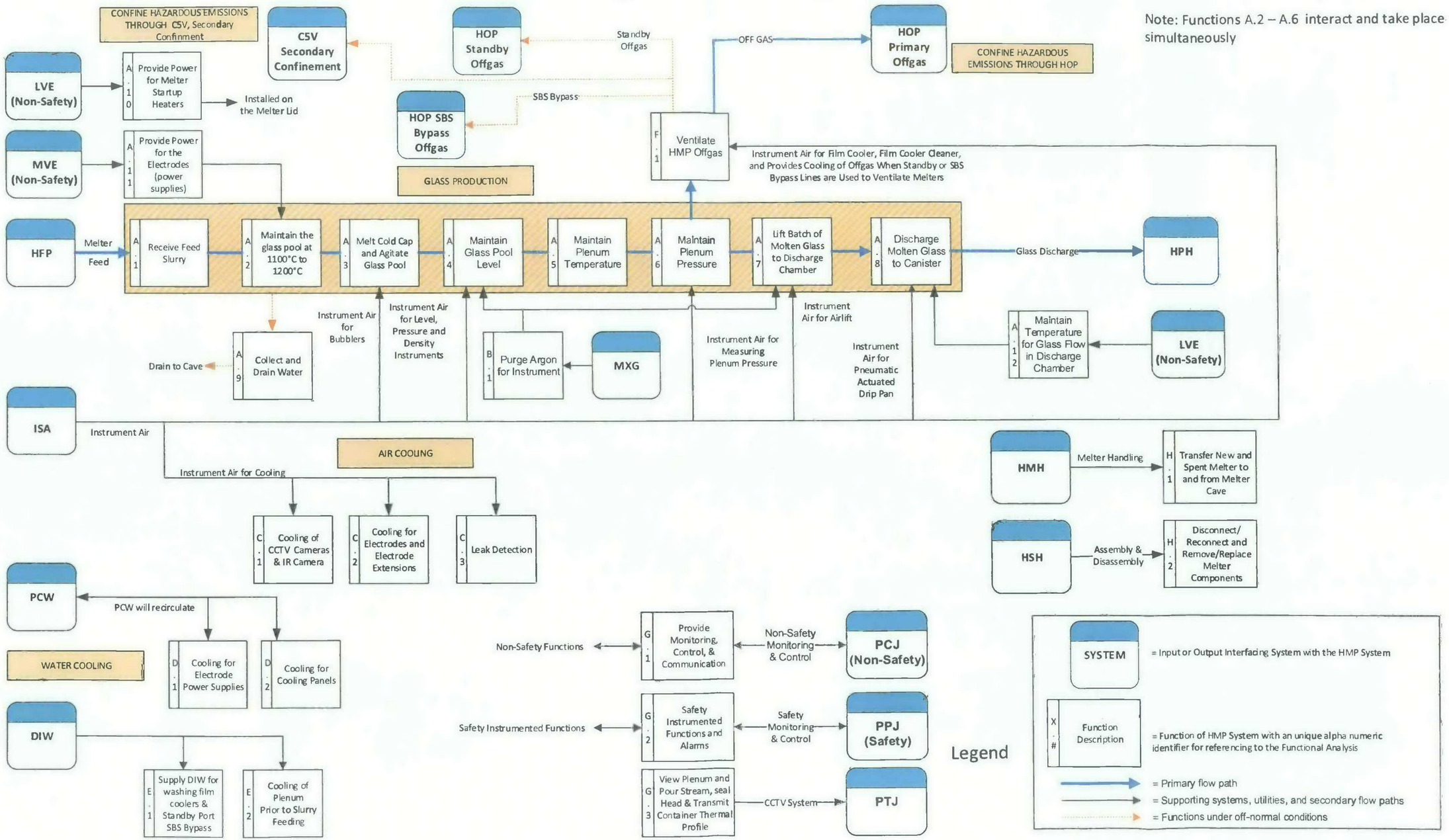

The functions included in Figure 2-3 are the primary and secondary level functions of the HMP systems. These functions are further described in Table 2-1, and provide a reference back to Figure 2-3. Where appropriate to support definition of functional and design requirements, functions have been further decomposed and additional levels of supporting functions are also described. The requirement section number provides the location of the applicable functional analysis incorporated into system requirements.

Appendix B provides a further decomposition of system functions, including initiating, terminating, and integrating events and functions.

Table 2-1 – Functional Analysis and Crosswalk to Requirements

Reference	Functional Analysis Description	Requirement Section No.
A.	**Glass Production**	N/A
A.1	Receive Feed Slurry: Receive slurry mixture of pretreated waste and glass-forming chemicals.	3.5.3.2
A.1.2	Prevent Plugging of Feed Line: Prevent plugging of the melter feed lines through the melter feed nozzles to ensure operability.	3.5.1.1.3
A.2	Maintain the Glass Pool Temperature: Maintain glass temperature within a band of 1100°C and 1200°C with a nominal set point of 1150°C.	3.5.1.1.2, 3.9.1.1
A.3	Melt the Cold Cap and Agitate the Glass Pool: Agitate glass pool to distribute heat generated in the glass and melt or dissolve the underside of the cold cap.	3.5.1.1.6, 3.5.4.4
A.4	Maintain Glass Pool Level: Maintain and monitor glass level through level probes submerged into the glass.	3.5.4.4, 3.9.1.7.3
A.5	Maintain Plenum Temperature: Maintain plenum temperature at a range of (TBD) during slurry feeding.	3.9.1.7.2
A.6	Maintain Vacuum Pressure in Plenum: The HLW melter offgas treatment process (HOP) system maintains plenum vacuum relative to its exterior environment, the HLW melter cave.	3.4.1.2, 3.5.2.1.1, 3.9.1.7.1
A.7	Lift Molten Glass to Discharge Chamber: Discharge molten glass from the melter to the discharge chamber.	3.6.1.1, 3.6.1.3, 3.9.1.7.5
A.8	Discharge Molten Glass to Canister: Discharge molten glass from the discharge chamber to the canisters to support required throughput.	3.4.1.1, 3.6.1.1, 3.6.1.2
A.9	Collect and Drain Water: Prevent the backup of water in the event of a cooling water leak or the uncontrolled addition of water from other sources.	3.5.4.1
A.10	Melt Startup: Temporary startup heaters are installed and powered from the low voltage electrical (LVE) system to startup the melter and perform the initial bake-out of the refractory and melt the startup frit to initiate joule heating.	3.7.1.3, 3.7.3.1, 3.9.1.6
A.11	Provide Power for the Electrodes: Provide power from the MVE system to the melter electrode power supplies with ground fault protection.	3.5.1.1.2, 3.7.1.1, 3.7.2.1, 3.7.3.2, 3.7.3.3, 3.9.1.1
A.12	Maintain Temperature for Glass Flow in Discharge Chamber: Provide power from the low voltage electrical (LVE) system to the discharge heaters to prevent the glass from solidifying during pouring cycles to the canisters.	3.7.1.2, 3.7.3.1
B.	**Argon Purging (MXG)**	N/A
B.1	Argon Purge: Purge argon through the glass pool level probes. Purge argon into the airlifts between pouring cycles to reduce glass oxidation.	3.6.1.3, 3.9.1.7.3
C.	**ISA Air Cooling/Purging**	N/A
C.1	Cooling of CCTV & IR Cameras: Purge Instrument Air Supply (ISA) to cool outside surface of the cameras and prevent deposit buildup.	3.8.3.2
C.2	Cooling for electrodes and electrode extensions: Purge ISA during all operating modes to cool the electrodes and electrode extensions.	3.7.3.4, 3.8.3.2
C.3	Leak detection: Provide a leak detection system between the cooling panels and melter shell.	3.5.4.2

Reference	Functional Analysis Description	Requirement Section No.
D.	**PCW Water Cooling**	N/A
D.1	PCW – Cooling for Electrode Power Supplies: Provide a continuous water cooling loop to prevent overheating of melter power supplies and output transformers.	3.7.3.6, 3.7.3.7
D.2	PCW – Cooling for cooling panels: PCW provides water cooling of the melter base and exterior walls within cooling panels. Maintain thermal profile across barrier around glass pool to prevent leakage of molten glass.	3.4.2.3, 3.5.4.2, 3.8.3.1
E.	**DIW Demineralized Water**	N/A
E.1	DIW – Washing Film Coolers & Standby Port on SBS Bypass: Film Coolers and Standby Port over time may build up solids on the surface. Washing is manually activated to remove solids buildup.	3.8.3.3
E.2	DIW – Cooling of Plenum Prior to Slurry Feeding: Cool plenum & glass surface prior to introducing feed from the idle condition.	3.8.3.3
F.	**Offgas Ventilation (HOP)**	N/A
F.1	Ventilate HMP Offgas: Water vapor and volatiles will be removed from the melters by the offgas system HOP routed through a dedicated flue.	3.4.1.2
F.1.1	Remove deposit buildup on Film Cooler.	3.4.4.7
F.1.2	Ventilate HMP offgas to the HOP standby offgas during cleaning or replacement of the film coolers.	3.4.1.3
F.1.3	Ventilate HMP offgas to the HOP SBS bypass offgas line during maintenance on SBS or wet electrostatic precipitator.	3.4.1.3
G.	**Support, Monitoring, and Communication Functions**	N/A
G.1	PCJ – Provide Monitoring, Control, & Communication:	N/A
G.1.1	The HMP process shall be monitored and controlled by the PCJ system and shall include the following main functions: a) Monitor glass pool temperature b) Monitor plenum pressure c) Monitor plenum temperature d) Monitor glass pool level and density e) Monitor refractory temperature f) Monitor cooling panel cooling water flow and temperature g) Monitor leak detection system h) Control rate of discharge from the glass pool to the discharge chamber i) Monitor container fill level j) Monitor and control electrode power supplies including alarms and faults k) Monitor and control discharge heater power supplies including alarms and faults l) Monitor and control startup heater power supplies including alarms and faults	3.9.1.7.1, 3.9.1.7.2, 3.9.1.7.3, 3.9.1.2, 3.9.1.3, 3.9.1.7.5, 3.9.1.7.4, 3.9.4.2
G.1.2	The PCJ system shall allow the remote monitoring and control of the HMP system from the HLW Facility Control Room (FCR) and Main Control Room (MCR) in PTF.	3.9.4.2
G.2	PPJ – Provide Safety Monitoring, Controls, and Communication	N/A
G.2.1	**[HOLD]** Upon detection of low air flow to the melter plenum, the melter plenum dilution air system terminates feed to the melter. The PPJ closes isolation valves for the ADS air supply (terminates melter feed).	3.9.2.3, 3.9.4.3
G.2.2	**[HOLD]** Terminate Melter Feed – The PPJ closes isolation valves for the ADS air supply (terminates melter feed) upon high plenum pressure.	3.9.2.2, 3.9.4.3

Reference	Functional Analysis Description	Requirement Section No.
G.2.3	Seismic Shutdown Signal Interlock – The HMP system design shall interface with the PPJ system to receive a seismic shutdown signal, which will automatically activate safety interlocks for closure of isolation valves for the service piping connected directly to the melters upon a seismic event.	3.9.2.1, 3.9.4.3
G.2.4	Glass Pour Completion – The HMP airlift valves which control glass pour shall interface with the PPJ system to initiate an interlock to the HPH bogie drive after completion of canister pour.	3.9.2.4, 3.9.4.3
G.3	PTJ – Mechanical Handling CCTV System:	N/A
G.3.1	View Plenum, Pour Stream, and Container Thermal Profile:	3.9.1.7.4, 3.9.1.4
H.	**Remote Maintenance and Mechanical Handling of Melters**	N/A
H.1	HMH – Transfer New and Spent Melter to and from Melter Cave	3.5.3.1
H.2	HSH – Disconnect/Reconnect and Remove/Replace Melter Components	3.4.2.4, 3.4.4.1

2.2 System Classification

The HMP systems contain components with the following classifications/designations:

- ☒ Safety Class
- ☒ Safety Significant
- ☒ Dangerous Waste Permit affecting
- ☒ Air Permit affecting
- ☒ Waste Acceptance Impacting
- ☒ General

2.3 Basic Operational Overview

A functional description of the system is provided in Sections 2 and 2.1, which provide the context diagram for the system, interfaces with other systems, a simplified process diagram of the system, a functional block diagram, and descriptions of the system functions. A basic operational overview of the system is described in this section. Detailed operational information is provided in Section 4.

The feed slurry enters through two feed pumps, each supplying a separate feed nozzle on the melter. Feed from the high-level waste melter feed process system (HFP) melter feed vessel is done by two separate air displacement slurry (ADS) pumps that alternate to minimize the potential for steam surging and plenum vacuum fluctuations. The feed slurry will fall from the feed nozzles located on the melter lid and onto the molten glass surface within the melter. The feed material forms a distinct layer, often referred to as the "cold cap," on the surface of the glass pool.

Joule heating will provide the energy to melt feed materials by passing alternating current directly through the molten waste glass. Each melter has an independent power supply which is fed from the MVE, heating the glass pool to an average of 1150°C which is regulated through a temperature-control loop using multiple glass pool thermocouples.

Each melter has two discharge chambers. Each discharge chamber has a discharge riser; a channel used to direct the molten glass into the discharge trough. A tube referred to as the airlift lance is inserted from the lid of the melter into the riser to inject gas into the molten glass for airlifting. The molten glass is airlifted up to the top end of the sloped discharge trough. It then gravity flows into the discharge chamber where the glass stream falls from the trough tip. The glass then freefalls through the pour flange and pour spout into the stainless steel waste canisters.

3 Design Requirements

3.1 Requirements

Requirements are documented in Sections 3.4 through 3.10. Each requirement statement is accompanied by a basis discussion (as needed) and the expected means of verification. Requirements must be met in design. If a requirement stated in this document cannot be met in design, a revision to the requirement needs to be pursued, if possible, or the design must be changed to meet the requirement.

Requirements preceded by "**[HOLD]**" may only be used in support of preliminary or committed design, which shall also be issued with appropriate holds per procedure 24590-WTP-3DP-G04B-00046, *Engineering Drawings*. These requirements may not be used in support of fabrication or construction.

The following abbreviations are used to designate the selected method for verification (see 24590-WTP-GPG-ENG-0161, *Technical Requirements Management*, for additional guidance concerning methods of verification):

(I) Inspection
(A) Analysis
(D) Demonstration
(T) Test

The following abbreviations are used to designate the organization responsible for performing the verification:

(ENG) Engineering
(CON) Construction
(SU) Startup
(COM) Commissioning
(SUP) Supplier
(SUB) Subcontractor
(SQR) Supplier Quality Representative
(REC) Receiving

3.2 Bases

Basis discussions are provided as needed to explain the decomposition or interpretation from the originating source requirement(s). Where a **[HOLD]** has been applied to a requirement, this section will include the basis for the "HOLD".

3.3 References

The requirements include a source document reference and a requirement object identification number (ROIN) included in brackets following the requirement statement. Each unique source document reference, with ROIN number(s), is bracketed separately. Requirements may include a reference to the Section 2.1, Functional Analysis, are listed in parentheses following the source document and ROIN number references. A complete listing of all source references is provided in Section 5.1.

3.4 General Requirements

3.4.1 Mission and Functional / Performance Requirements (Including States/Modes)

3.4.1.1 Production Rate

Requirement: The baseline HMP melters shall be designed to produce a combined glass at a rate of 6.0 metric tons of glass (MTG)/day in ceramic joule heated melters. The replacement melters shall have a combined design capacity of up to 7.5 MTG/day. The HMP throughput will be a function of feed characteristics in a given batch. [Sections 6.1.3, 15.3.2, BOD, ROIN: 40-19792, ROIN: 8-3498] [Section C.7(b)(3), WTP Contract, ROIN: 1-25956] (A.8)

Basis Discussion: The HLW facility systems to support future operation of the HLW facility at a design capacity of up to 7.5 MTG/day including melter power supplies, pour cave cooling, and support for additional bubblers as necessary. Each discharge chamber is capable of supporting the required melter design capacity individually. The WTP contract requires testing to be performed during cold commissioning and hot commissioning to verify at a reduced production rate both melters combined can produce 3.6 MTG/day over a 20 day period. This is why the verification tests below do not align with the requirement statement.

Verification: Verification is expected to be achieved through the following:

Verif. Method	Verif. By	Plan	Notes/Comments
I	ENG	Review vendor documentation and submittals to verify that the baseline melters can produce a combined 6.0 MTG/day, and replacement melters can produce a combined 7.5 MTG/day.	
T	SU/COM	Perform an integrated test to verify the combined output for the HLW melter system can produce a minimum of 3.6 MTG/day during cold commissioning over a 20 day period.	Performed per WTP Contract Section C, Standard 5
T	SU/COM	Perform an integrated test to verify the combined output for the HLW melter system can produce a minimum of 3.6 MTG/day during hot commissioning over a 20 day period.	Performed per WTP Contract Section C, Standard 5

3.4.1.2 Dedicated Offgas Systems

Requirement: Each melter shall be connected to a dedicated offgas treatment system. [Section 15.3.3, BOD, ROIN: 1-41556] (A.6, F.1)

Basis Discussion: The HMP produces offgases containing harmful and regulated constituents that need to be removed prior to releasing to the environment. The dedicated offgas system also maintains the melter plenum at a negative pressure to confine the offgases. [ALARA]

Verification: Verification is expected to be achieved through the following:

Verif. Method	Verif. By	Plan	Notes/Comments
I	ENG	Review the design to verify that each melter has a dedicated offgas system.	

3.4.1.3 Melter Offgas Configuration

Requirement: The HLW melter design shall include a configuration to support maintaining a negative plenum pressure and ventilating offgases produced in the melters during maintenance activities of the film cooler, SBS and wet electrostatic precipitator (WESP). (F.1.2, F.1.3)

Basis Discussion: Ensures confinement of offgases during maintenance activities.

Verification: Verification is expected to be achieved through the following:

Verif. Method	Verif. By	Plan	Notes/Comments
I	ENG	Review the design to verify the melters are designed and configured to maintain a negative plenum pressure and ventilate offgases during maintenance activities.	

3.4.1.4 Design Life

Requirement: The HLW HMP components listed in Table 3-1 shall be designed to operate, and provide primary containment/confinement where that is a function of the component, for a minimum design life, inclusive of maintenance, as indicated. [Section C.7(a)(1), WTP Contract, ROIN: 1-25930] [Sections 11.1.1, 11.4.1, 11.7.4, 11.8.3, BOD, ROIN: 1-41120, ROIN: 1-41121B, ROIN: 1-41154, ROIN: 1-41210, ROIN: 1-41214] [Sections 2, 14.1, 14.8, Appendix A, ORD, ROIN: 1-39819, ROIN: 8-3584, ROIN: 8-7839, ROIN: 2-49671]

Table 3-1 – HMP Equipment and Components Design Life

Equipment/Component Description	Design Life
Melter (non-maintainable components)	5 years
Welded Piping (including hard to reach)	40
Jumpers (Mechanical, Instrument Air, and Electrical)	Target design life >5 yr
Inline components (ISA, DIW, PCW: valves, instruments)	Target design life >5 yr

Basis Discussion: All equipment whose failure would result in complete or partial system outage with the potential to disrupt plant operations should be designed to last a minimum of 5 years without significant maintenance or replacement that would require the equipment to be removed from service (i.e. calibration would not be considered major maintenance because it does not require the equipment to be physically removed from service). This reduces the risk of an unplanned outage and lost glass production, reduces waste, and minimizes personnel exposure. Replacement refers to replacement of the entire numbered component. Replacement of subcomponents such as packing, gaskets, etc. is considered maintenance.

Equipment and material selection is based on proven performance, value engineering principles, and fit-for-function principles. The selection of equipment and materials is further addressed in detail as the design progresses. In-cell/in-cave equipment design considers the routine environmental exposures under normal operations for non-safety equipment; safety and post-accident monitoring (PAM) equipment also considers abnormal and emergency exposures – this minimizes the need for equipment maintenance, exposure and radiological waste generation in radiological areas. [ALARA]

Verification: Verification is expected to be achieved through the following:

Verif. Method	Verif. By	Plan	Notes/Comments
I	ENG	The 'qualified' design life for safety and PAM SSCs from Table 3-1 is to be verified through review of equipment design as documented in equipment qualification packages.	Design life for safety and PAM equipment to be documented in equipment qualification packages (EQPs).
I	ENG	Review design to verify design life of non-replaceable, non-maintainable SSCs is documented in procurement documents and supported by supplier certificates of conformance.	

3.4.1.5 Room Environment Conditions for Safety SSCs

Requirement: The Safety equipment in the HLW HMP credited a safety function and PAM instruments (per report 24590-HLW-RPT-ENS-12-002, HLW Preliminary Post Accident Monitoring Report) shall be designed to operate and withstand the most severe environmental conditions identified for the room in which they are installed, inclusive of aging effects, throughout their qualified life. [Safety Criterion: 4.4-1, SRD, ROIN: 1-38690] [Section 11.7.3, BOD, ROIN: 8-13210, ROIN: 8-13212]

Basis Discussion: Safety SSCs designated as safety class (SC) and safety significant (SS) are designed and qualified to perform their safety function as intended in the room environment conditions associated with the events for which they are intended to respond. The effects of aging on normal and abnormal functioning are considered in design and qualification. HLW Room Environment Data Sheet (24590-HLW-U0D-W16T-00001) identifies environmental conditions for rooms that house safety SSCs. 24590-HLW-RPT-ENS-12-002, *HLW Preliminary Post Accident Monitoring Report* identifies PAM instrumentation. [ALARA]

Verification: Verification is expected to be achieved through the following:

Verif. Method	Verif. By	Plan	Notes/Comments
A/T	ENG	Perform analysis or testing to verify the ability of the SSCs credited with a safety function and post accident monitoring to withstand specified environmental conditions for the rooms in which they are installed.	Document in EQP. See HLW Room Environment Data Sheet (24590-HLW-U0D-W16T-00001) for room environmental conditions.
I	ENG	Review the design to verify conformance to the as-tested or as-analyzed configuration.	Document in an evaluation/assessment or EQP.

3.4.1.6 Room Environment Conditions for Non-Safety SSCs

Requirement: Non-Safety equipment/components shall be designed to operate and withstand the service conditions per Table 12-1 in the BOD. [Table 12-1, BOD, ROIN: 2-39190] [Sections 11.16, 16.1, ORD, ROIN: 14-1248E, ROIN: 8-7000]

Basis Discussion: Non-Safety SSCs are designed to function as intended in the room environment conditions associated with their location. The maximum temperature for the localized environment of the melters does not apply as the temperatures make it impractical to attain.

Verification: Verification is expected to be achieved through the following:

Verif. Method	Verif. By	Plan	Notes/Comments
I	ENG	Review design of non-safety SSCs to verify compliance with BOD Table 12-1 conditions.	Document in an evaluation/assessment.

3.4.1.7 Materials of Construction and Erosion/Corrosion Design Parameters

Requirement: The HMP system shall be designed to include adequate allowance for erosion/corrosion and use materials of construction in accordance with Appendix H of the SRD to ensure containment of radioactive materials. Materials of construction for the melter and melter shell shall be able to withstand the radioactive, thermal, and corrosive environment caused by the melter feed, glass, and offgases as required by sound engineering principles to ensure adequate performance and containment over the lifetime of the melter. The melter plenum, glass pool, and lid shall be lined with refractory material designed to withstand thermal shock and corrosion by molten glass, splashed feed and glass, and offgases. [Appendix H, Section 5, SRD, ROIN: 8-6462] [Sections 15.3.1, 15.3.3, BOD, ROIN: 8-3497, ROIN: 1-41555, ROIN: 8-3502, ROIN: 1-41557] [Sections 3.4.1.4.1.5, 4.4.8.3, PDSA–HLW Facility, ROIN: 40-9936, ROIN: 45-31823]

Basis Discussion: The allowance for erosion/corrosion and applicable materials of construction are limited to those components that come into contact with molten glass and offgas that are required to maintain confinement/containment of those process fluids. Materials of construction that can withstand the erosive/corrosive high-activity waste and chemicals are selected. The glass pool refractory will be primarily designed to contain bulk glass and this requirement will be the main driver in the material selection for the glass pool refractory. The refractory will experience corrosion due to the glass in the glass pool. The plenum refractory will be subjected to corrosive offgas. Refractory corrosion rates, based on rigorous engineering evaluation of available pilot melter and/or lab scale testing are documented to meet established performance requirements for the melter designs as documented in Section 15.3.3 of the BOD. The metal parts of the melter shell and discharge chamber, such as the pour spout, will be exposed to molten glass and offgas and will be tested and documented to be resistant to corrosion, radiation and thermal cycles. [ALARA]

The results of these tests are presented in Section 4 of the *HLW Melter Material Selection Report*, Rev. 0, 24590-101-TSA-W000-0010-418-01.

Verification: Verification is expected to be achieved through the following:

Verif. Method	Verif. By	Plan	Notes/Comments
A/I	ENG	Perform an analysis/inspection of materials used in the HMP system which are in contact with, and are required to maintain confinement or containment of feed slurry, molten glass and offgas to verify that they are acceptable for use in the operating environment and have adequate erosion and corrosion allowances.	Details of the allowed materials and corrosion allowances can be found in: • 24590-HLW-N1D-HMP-00001, HLW Melter 1 & 2 Gas Barrier and Cooling Panels Melter Vendor Durateck Inc. provided Melter Materials Selection Report, 24590-101-TSA-W000-0010-418-01, see Section 4.
I	ENG	Review design of components used in the HLW Facility HMP system which are in contact with, and are required to maintain confinement or containment of, molten glass and offgas for concurrence with analysis.	
D	SU/COM	Demonstrate during initial heat up and at operating temperature containment is maintained per design.	

3.4.1.8 Seismic Design for SSCs

Requirement: [HOLD] Elements of the HMP system, including PAM instrumentation (per report 24590-HLW-RPT-ENS-12-002, *HLW Post Accident Monitoring Report*), shall be designed for seismic conditions in

accordance with Table 3-2 below: [Sections 3.4.2.1.1.6, 4.3.21, 4.3.21.2, 4.4.8, 4.4.8.4, 4.3.20.2.2, 4.4.3.1.4, PDSA – HLW Facility, ROIN: 40-37714, ROIN: 40-25064, ROIN: 45-31503, ROIN: 2-41340, ROIN: 45-31829, ROIN: 40-25064, ROIN: 45-31424, ROIN: 45-31584] [Section 11.7.3, BOD, ROIN: 8-13210] [Sections 4.1, 4.2, Safety Criterion 4.1-3, 4.2-3, SRD, ROIN: 1-38668, ROIN: 1-38653]

Table 3-2 – HMP Seismic Design Categories

Description	Seismic Category	Reference
[HOLD] Melter Shell	SC-II	HLW PDSA 4.4.8, 4.4.8.4, SDS Table C-2
Melter Base Structure (melter supports)	SC-II	HLW PDSA 4.4.8, 4.4.8.4
[HOLD] Melter Lid	SC-II	HLW PDSA 4.4.8, 4.4.8.4
[HOLD] Melter Components	SC-II	SDS Table C-2
[HOLD] Melter Service Piping	SC-III	SDS Table C-2, Section 4.1 Safety Criterion 4.1-3, SRD.
[HOLD] HMP Service Piping feeding HOP	SC-I, SC-III	HLW PDSA 4.3.20.2.2 HLW PDSA 4.4.3.1.4
[HOLD] Melter Plenum Pressure Interlock	SC-III	SDS Table C-2
Seismic shutdown signal interlocks, including seismic monitoring	SC-I	Sections 3.4.2.1.1.6, 4.3.21, 4.3.21.2, PDSA– HLW Facility
PAM instruments Notes these are on hold in the PAM report for HMP.	Seismic category designations per PAM report*	Safety Criterion 4.3-4, SRD *24590-HLW-RPT-ENS-12-002, *HLW Preliminary Post Accident Monitoring Report*

Basis Discussion: The 24590-WTP-SRD-ESH-01-001-02, *Safety Requirements Document Volume II (SRD)*, Safety Criterion 4.1-3 details the equivalence of the WTP seismic category to the seismic performance category of DOE STD 1020-94, *Natural Phenomena Hazards Design and Evaluation Criteria for Department of Energy Facilities*. The SRD also states that SSCs designated as safety SSCs be designed to withstand the effects of natural phenomena hazard (NPH) events (e.g., earthquakes, wind, and floods) without loss of capability to perform specified safety functions. [ALARA]

Reason for HOLDs are discussed below:

Melter Shell: According to *Safety Design Strategy for the High-Level Waste Facility* (SDS) the melter shell shall be designed, installed, and maintained to retain its integrity for glass confinement during and after a seismic event. This design strategy in the SDS and its Section Table C-2 states the melter shell is designed to SC-III, and is in misalignment with the PDSA which states the melter shell is designed to SC-II and is why the requirement is on HOLD. **[ATS-MGT-15-0319]**

Melter Lid: P&ID No. 24590-HLW-M6-HMP-00001001, 00001002 and 24590-HLW-M6-HMP-20001001, 20001002 states the melter lid is SC-II. This design strategy in the SDS and its Section Table C-2 states melter components shall be designed to SC-II and there is no ROIN or specific requirement for the melter lid seismic class documented in the PDSA. **[ATS-MGT-15-0320]**

Melter Components: According to SDS the melter components to be determined (**TBD**) shall be designed, installed, and maintained based on the results of seismic interaction analysis. This design strategy in the SDS and its Section Table C-2 states melter components (**TBD**) shall be designed to SC-II, however is not documented within the PDSA and is why the requirement is on HOLD. Currently interaction analysis has not yet been performed this SSC has been conservatively seismically classified as SC-II. **[ATS-MGT-15-0321]**

Melter Service Piping: According to the SDS the melter and HOP service piping shall be designed to SC-III which is in misalignment with the PDSA. Currently the PDSA does not classify melter service piping as having a credited seismic category and is why the requirement is on HOLD. **[ATS-MGT-15-0322]**

Melter Plenum Pressure Interlock: According to SDS the melter plenum pressure interlock mitigates the consequences of an offgas release by limiting the duration of offgas release upon high melter plenum pressure and is currently not documented within the PDSA and is why the requirement is on HOLD. This is Not in Current Design, (NICD). [ALARA] **[ATS-MGT-15-0323]**

Verification: Verification is expected to be achieved through the following:

Verif. Method	Verif. By	Plan	Notes/Comments
A/T	ENG/ SUB	Analysis or testing performed on safety SSCs to demonstrate capability to withstand seismic event.	This is expected to be documented in the EQPs. See the latest revision of 24590-WTP-PD-ENG-0001, *Equipment Qualification Program Description* for additional information, including independent peer review of seismic evaluation of the applicable SSCs (WTP and supplier-supplied) in accordance with requirements of DOE-STD-1020-94, *Natural Phenomena Hazards Design and Evaluation Criteria for Department of Energy Facilities*.
I	ENG	Review the design to verify conformance to the as-tested or as-analyzed configuration.	Document in an evaluation/assessment or EQP.

3.4.2 Nuclear Safety, ALARA, Environmental, and Regulatory Requirements

3.4.2.1 Safety Designations

Requirement: [HOLD] HMP system SSCs shall be designated as safety SSCs in accordance with Table 3-3 below: [Safety Criterion 4.1-2, 4.1-3, 4.4-1, SRD, ROIN: 1-38650, ROIN: 1-38653, ROIN: 1-38690] [Sections 3.4.1.4.1.2, 3.4.1.4.1.5, 4.3.4.1 4.4.8.5, 4.3.20.2.2, 5.3, Table 5.3-1, PDSA – HLW Facility, ROIN: 8-16014, ROIN: 40-9936, ROIN: 1-21669, ROIN: 45-30746, ROIN: 45-30745, ROIN: 45-31104, ROIN: 1-21669, ROIN: 45-31424, ROIN: 45-30759]

Table 3-3 – HMP Safety Designations

Equipment/Component Description	Safety Function	Safety Designation	References
Melter Shell	To reduce the probability of a release of radioactive materials, the melter shell provides containment of the molten glass	SS	Section 3.4.1.4.1.5, 4.4.8.5, 5.3, Table 5.3-1, PDSA – HLW Facility

Melter **[HOLD]**	Melter design reduces the probability of a loss of molten glass containment due to melter degradation by providing glass containment.	SS	SDS Table C-2
Melter Plenum Pressure Interlock **[HOLD]**	Melter plenum pressure interlock detects high melter plenum pressure (**TBD**) over (**TBD**) period of time. Interlock closes isolation valves for the ADS air supply (terminates melter feed) within (**TBD**) seconds of detecting high plenum pressure. Melter plenum pressure interlock mitigates the consequences of an offgas release by limiting the duration of offgas release upon high melter plenum pressure (NICD)	SS	Section 3.4.1.4.1.2 PDSA – HLW Facility, SDS Table C-2
Melter Service Piping **[HOLD]**	Melter and HOP service piping confinement boundary mitigates the consequences of an offgas release by providing confinement of offgas in conjunction with the HOP SBS hydraulic seal	SS, SC	SDS Table C-2 Section 4.3.20.2.2, PDSA – HLW Facility
Melter Plenum Dilution Air Controls **[HOLD]**	Melter plenum dilution air system detects low airflow of (**TBD**) provided to the melter plenum (associated with the maximum allowable total organic carbon (TOC)). Dilution air system closes isolation valves for the ADS air supply (terminates melter feed) within (**TBD**) seconds of detecting low airflow to the melter plenum. Melter plenum dilution air system reduces the probability of an offgas flammability event by maintaining adequate dilution air in the melter plenum. (NICD)	SS	SDS Table C-2

HLW Melter Utility Jumpers	Melter air and water connections reduce the probability of a steam explosion by physically preventing cross connections of air and water.	SS	Section 5.3 Table 5.3-1, PDSA – HLW Facility, SDS Table C-2
Mechanical and Electrical through-wall penetrations	Mitigates the consequences of an airborne release to the public and/or co-located workers by providing a high-integrity confinement boundary evaluated for design basis accident (seismic and fire) conditions.	SC	PDSA – HLW Facility 4.3.4.1

Basis Discussion: To ensure safety SSCs meet the design functions, Safety Criterion 4.4-1 of the SRD states: "Safety structures, systems, and components designated as Safety Class and Safety Significant shall be designed and qualified to function as intended in the environments associated with the events for which they are intended to respond."

Reason for HOLDs are discussed below:

Melter: According to SDS the melter shall be designed to maintain its integrity and functionality for exposure to molten glass at (**TBD**) hydrostatic load, (**TBD**) pressure, and (**TBD**) temperature and therefore is credited with a Safety Significant classification. This is in misalignment with the PDSA as the PDSA does not classify the entire melter as SS and is why the requirement is on HOLD. **[ATS-MGT-15-0324]**

Melter Plenum Pressure Interlock: According to SDS the melter plenum pressure interlock mitigates the consequences of an offgas release by limiting the duration of offgas release upon determination of high melter plenum pressure and is credited as SS. Currently the PDSA does not credit the plenum pressure interlock as being SS and is why the requirement is on HOLD. This is Not in Current Design, (NICD). See Section 3.9.2.2 for additional information for monitoring and control for the melter plenum pressure interlock. [ALARA] **[ATS-MGT-15-0323]**

Melter Service Piping: According to the SDS the melter and HOP service piping shall be designed and credited as being SS which is in misalignment with the PDSA. Currently the PDSA does not credit melter service piping as SS but does credit the HMP utility piping servicing to the HOP which is credited as SC and is why the requirement is on HOLD. **[ATS-MGT-15-0322]**

Melter Plenum Dilution Air: According to the SDS the melter plenum dilution air shall be designed and credited as being SS which is in misalignment with the PDSA. Currently the PDSA does not credit the melter plenum dilution air as SS and is why the requirement is on HOLD. This is Not in Current Design, (NICD). See Section 3.9.2.3 for additional information for melter plenum dilution air. **[ATS-MGT-15-0325]**

Verification: Verification is expected to be achieved through the following:

Verif. Method	Verif. By	Plan	Notes/Comments
I	ENG	Verify that the safety function, as established in the PDSA/documented safety analysis (DSA) is correctly reflected in the Equipment Qualification Datasheet (EQD) and supporting documentation in the EQP.	EQP is issued and verified to align with the PDSA/DSA. Review is expected to be a joint effort between the design agency and the environmental qualification (EQ) group.

3.4.2.2 Personnel Access to Equipment and Instrumentation – ALARA Exposure

Requirement: The HMP system maintainable equipment and instruments requiring personnel access for periodic calibration, preventive maintenance, and periodic functional testing while the plant is in normal operation shall be located in areas where personnel exposures are ALARA. [Sections 7.1, 9.1, 11.16, ORD, ROIN: 9-58, ROIN: 8-4346, ROIN: 8-4345, ROIN: 8-10053]

Basis Discussion: [ALARA]

Verification: Verification is expected to be achieved through the following:

Verif. Method	Verif. By	Plan	Notes/Comments
I	ENG	Provide evaluation of design to verify equipment maintenance, calibration and periodic functional tests can be performed remotely or in low exposure areas.	Document in evaluation/assessment. Plant Engineering to participate in evaluation.

3.4.2.3 Isolation from Radioactive Material

Requirement: Utility and support systems interfacing with the HMP system equipment containing radioactive substances shall include suitable isolation design provisions to prevent diffusion, backflow, or other methods of leakage of the contents to areas where the material is not intended. [Section 5.1.2, BOD, ROIN: 1-40438] [Section 7.1, ORD, ROIN: 9-36, ROIN: 9-37] (D.2)

Basis Discussion: Utilities are used to flush/wash lines, purge instrumentation, and provide cooling, injection of air into the film coolers, and other provisions and purposes. The systems will be designed to include means to prevent backflow and diffusion of contamination into systems that interface with contaminated portions of the HMP. ISA is used for instrumentation purges, bubblers to agitate the glass pool, airlift to discharge glass, and air cooling for the electrodes and electrode extensions. Argon is used for instrumentation purge, and on the airlifts to discharge glass. DIW is used to cool the plenum prior to slurry feeding, and washing of the film coolers and standby port of the submerged bed scrubber (SBS) bypass line. PCW is used to cool the external refractory surfaces through the cooling panels. [ALARA]

Verification: Verification is expected to be achieved through the following:

Verif. Method	Verif. By	Plan	Notes/Comments
I	ENG	Review design to verify inclusion of isolation valves or other means to prevent backflow and diffusion on utility/support systems that interface with contaminated portions of the HMP system.	

3.4.2.4 Support of Equipment Recovery

Requirement: Components of the HMP system with the potential for equipment failure, a means shall be provided for recovery of that equipment. The HMP system equipment shall use plugs for power and instrumentation instead of hard wiring for in-cell/in-cave locations that require regular maintenance. [Section 9.1, ORD, ROIN: 8-4349A, ROIN: 8-4350] [Section 11.3.2, BOD, ROIN: 1-41133] (H.2)

Basis Discussion: Plugs for interconnection support remote handling during maintenance of equipment inside cells and caves with manipulators. Recovery of equipment accomplished by remote maintenance will be designed into the facility for off-normal recovery operations. [ALARA]

Verification: Verification is expected to be achieved through the following:

Verif. Method	Verif. By	Plan	Notes/Comments
I	ENG	Review design to verify use of plugs, capable of being remotely disconnected/connected for power and instrumentation on in-cave components.	Document in an evaluation/assessment.

3.4.2.5 Fire Barriers

Requirement: The HMP system mechanical and electrical wall penetrations shall be designed with materials and methods of construction that do not reduce the required fire-resistance rating of the barrier they penetrate, as required by IBC 2000 and DOE-STD-1066-97 as tailored in the SRD. [Section 14.4.3, SRD, Table C.5-1-1, *DOE-STD-1066-97, Tailoring*; [Section 14.4.3, SRD, Table C.5-1-1, *DOE-STD-1066-97, Tailoring*; ROIN: 45-5285] [Sections 4.3.4.1, 4.3.4.3, PDSA – HLW, ROIN: 45-31104, ROIN: 45-31105, ROIN: 45-31106, ROIN: 45-31107] [Section 10.3.4.7, BOD, ROIN: 1-41107]

Basis Discussion: Fire barrier drawings that include barriers related to HMP are the following:

- 24590-HLW-U1-60-00002, *HLW Vitrification Building Fire Barrier Drawing Plan at EL 0'-0"*
- 24590-HLW-U1-60-00003, *HLW Vitrification Building Fire Barrier Drawing Plan at EL 14'-0"*

Verification: Verification is expected to be achieved through the following:

Verif. Method	Verif. By	Plan	Notes/Comments
I	ENG	Review the design of the mechanical and electrical wall penetrations to verify the structural and architectural design conforms to applicable codes and standards.	Perform a review. NSE and Fire Safety to participate in the review. May be documented in DVR.
I	ENG	Verify all components that penetrate a fire barrier are tested to not less than the required fire resistance rating of the barrier based on the fire exposure and acceptance criteria specified in ASTM E 119. Use of alternative methods for determining fire resistance shall be approved by the building official.	Document in an evaluation/assessment. Evaluation/assessment is to be submitted to the building official for approval.

3.4.3 System Interface Requirements

3.4.3.1 HMP Interfaces

Requirements associated with specific system interfaces are discussed in the subsequent requirement sections titled "System Interface Requirements." The HMP system interfaces are listed in Table 3-4 below.

Table 3-4 – HMP System Interfaces

System Locator	System Name	Nature of Interface
C5V	C5 Ventilation	Provides ventilation for melter exterior. Air inleakage into the melter is also drawn from the C5V.
DIW	Demineralized Water	Water for flushing lines and for initial charging of the cooling water loops.
HFP	HLW Melter Feed Process	Supplies slurry feed. Interface occurs at the connections dedicated at the feed nozzles of the melter.
HMH	HLW Melter Handling	Provides system and process transportation of the HLW melter and overpack from the melter assembly area to the cave air lock, and melter import to and export from the melter cave.
HOP	HLW Melter Offgas Treatment Process	Removes contaminants from gas generated by melter. Maintains vacuum on melter plenum.
HPH	HLW Canister Pour Handling	Provides for filling the canister with glass and for transportation of empty and full canisters.
HSH	HLW Melter Cave Support Handling	Provides system and processes for remote maintenance, melter assembly/disassembly and startup frit handling.
ISA	Instrument Service Air	Provides air required for instrument service and other high purity air needs. Provides air for bubblers for glass pool agitation and air lift for discharging molten glass.
LVE	Low Voltage Electrical	Power source for discharge chamber heaters and startup heaters.
MVE	Medium Voltage Electrical	Power source for electrodes.
PCW	Plant Cooling Water	Supplies cooling water for melter.
MXG	Miscellaneous Gases System	Argon gas used to purge instrumentation and airlift lances.
PCJ	Process Control System	Provides monitoring and automatic control functions for non-safety instruments and equipment.
PTJ	Process and Mechanical Handling CCTV System	CCTV system cameras used for viewing in-cave operations.
PPJ	Programmable Protection System	Provides monitoring and automatic control functions for safety instruments and equipment.

3.4.4 Other Technical, Specialty, Operations and Maintenance Requirements

3.4.4.1 Remotely Maintainable and Replaceable Equipment and Components

Requirement: The melters and melter consumable components in the HLW facility shall be designed to be remotely removable and replaceable by interfacing with the HSH system. [Sections 11.3.2, 11.3.2.1, 11.4.1, 11.4.4, 15.3.1, 15.3.3, 15.3.5, BOD, ROIN: 1-41133, ROIN: 1-41135, ROIN: 1-41150, ROIN: 1-41151, ROIN: 8-6563, ROIN: 8-3496, ROIN: 8-3500, ROIN: 8-3509] [Sections 5.2, 7.4, 8.1.3, 9.1, 14.1, 14.8, ORD, ROIN: 1-39930, ROIN: 1-39957, ROIN: 8-493, ROIN: 1-39963, ROIN: 8-4350, ROIN: 8-3585C, ROIN: 8-4337] (H.2)

Basis Discussion: Provisions will be made in the layout, including laydown space, to allow for the periodic replacement of melters and melter consumable components. This will facilitate ease of component replacement during operations and reduction in the mean time to repair. Where mean time to failure is short (less than a year), plug-in type connections are provided, if commercially available, to support multi-skilled worker concept, minimize tools required, and expedite repairs/replacement. Consumable components, those having a design life of less than 5 years, are modularized to facilitate replacement. [ALARA]

Verification: Verification is expected to be achieved through the following:

Verif. Method	Verif. By	Plan	Notes/Comments
I	ENG	Verify the design for all melter and melter consumable components have been designed to be remotely removable and replaceable.	Recommend using a software program such as IGrip or similar
D	SU/COM	Demonstrate remotability in accordance with 24590-WTP-PL-RACT-RT-0001, *WTP Remotability Verification Plan.*	Physical demonstration

3.4.4.2 Equipment Accessibility – Support of Maintenance and Operations

Requirement: Equipment, instrumentation, and electrical components shall be located outside the C3 contamination area where possible, and if located more than 5 feet from ground level, will have adequate space to allow for access with a ladder, portable manlift, scaffolding for operation and maintenance, and adequate clearances around equipment to accommodate maintenance personnel including any encumbrances on PPE. [Sections 9.1, 11.16, ORD, ROIN: 8-8072, ROIN: 8-8073, ROIN: 8-8074, ROIN: 8-8069, ROIN: 8-4346, ROIN: 8-10053, ROIN: 8-10056] [Sections 6.7, 8.1.2, 9.12, 9.5.6, 11.3.2.2, 11.3.2.3, 11.4.1, 11.4.4, 12.6.3, BOD, ROIN: 1-40577, ROIN: 1-40729, ROIN: 1-41030, ROIN: 1-41001, ROIN: 1-40999, ROIN: 1-41136, ROIN: 1-41137, ROIN: 1-41149, ROIN: 8-6560, ROIN: 1-41328] [Section 4.4, Safety Criterion 4.4-3, SRD, ROIN: 8-3522]

Basis Discussion: This improves maintenance operations and reduces mean time to repair. [ALARA]

Verification: Verification is expected to be achieved through the following:

Verif. Method	Verif. By	Plan	Notes/Comments
I	ENG	Review design documentation for equipment, instruments, instrument racks, and electrical components for accessibility.	

3.4.4.3 C3 Located Instrumentation

Requirement: Whenever possible, instruments and detectors that require maintenance shall be located outside of the C3 classified areas. However, transducer panels housing liquid level systems and associated input/output (I/O) and pressure transducers/transmitters, shall be located in C3 classified areas as a precaution against back-contamination. [Sections 9.1, 11.16, ORD, ROIN: 8-4346, ROIN: 8-10053, ROIN: 8-10059]

Basis Discussion: Locating instruments in areas that are not likely to be contaminated reduces the need for personal protective equipment when working on the instruments. Locating them in low dose areas reduces radiation exposure. If a transmitter is required to operate in a radiation environment, a radiation tolerant transmitter or remote sensing electronic type is used. [ALARA]

Verification: Verification is expected to be achieved through the following:

Verif. Method	Verif. By	Plan	Notes/Comments
I	ENG	Review design to verify transducer panels housing liquid level systems and associated input/output and pressure transducers/transmitters are located in C3 classified areas.	
I	ENG	Review design to verify instruments and detectors are located outside the C3 classified areas wherever possible.	

3.4.4.4 Decontamination

Requirement: HMP equipment subject to decontamination shall be designed to withstand this process without any reduction of functionality through degradation of the electrical, mechanical, or any other components involved. [Sections 5.2, 9.1, 14.16, ORD, ROIN: 1-39930, ROIN, 1-39931, ROIN: 8-8065, ROIN: 8-475] [Section, 11.8.3.1, BOD, ROIN: 1-41215]

Basis Discussion: This decontamination conditions the equipment sufficiently to allow hands-on maintenance to be possible. Currently there is no identified equipment on the HMP that require decontamination. [ALARA]

Verification: Verification is expected to be achieved through the following:

Verif. Method	Verif. By	Plan	Notes/Comments
I	ENG	Review design to verify provisions for decontamination of equipment has been included in the design and does not impact functionality.	Document in an evaluation/assessment. Plant Engineering to participate in review.

3.4.4.5 Startup Testing and Commissioning

Requirement: The system design shall accommodate provisions, as necessary, to support startup and commissioning testing as identified in Appendix A. [Sections 11.4.7, 11.5.1, BOD, ROIN: 8-6066, ROIN: 1-41169, ROIN: 8-3756] [Section 9.1, ORD, ROIN: 8-8067]

Basis Discussion: Additional nozzles, branch lines, removable spools or other provisions that are needed to support identified testing are to be accommodated in the design, as jointly determined by the design agency, and startup and commissioning during the design development and review process, with consideration given to the tests and demonstration activities required for requirement verification specified in Appendix A. This may include, but is not limited to, provisions to support the introduction or removal of fluids, gases, reagents or simulants; or the availability of special test ports, sampling ports, or temporary instruments or instrument lines.

Verification: Verification is expected to be achieved through the following:

Verif. Method	Verif. By	Plan	Notes/Comments
I	ENG	Review design to verify requirement is met based on established tests/demonstrations to be performed during startup and commissioning.	Document in an evaluation/assessment. Commissioning to participate in review.

3.4.4.6 C5 Located Instrumentation

Requirement: For instrumentation that are located within a R5/C5 area shall be located on remotely maintainable jumpers. [Section 11.16, ORD, ROIN: 8-10052]

Basis Discussion: None.

Verification: Verification is expected to be achieved through the following:

Verif. Method	Verif. By	Plan	Notes/Comments
I	ENG	Review design documentation for instrumentation located within R5/C5 areas are installed on remotely maintainable jumpers.	

3.4.4.7 Film Cooler Cleaner

Requirement: The HMP system shall be designed with a remotely operated mechanical film cooler cleaner through remotely interfacing with the HSH system. (F.1.1)

Basis Discussion: Over time deposits such as feed particles and condensed salts become baked onto the film cooler surfaces and are required to be cleaned.

Verification: Verification is expected to be achieved through the following:

Verif. Method	Verif. By	Plan	Notes/Comments
I	ENG	Review design to verify a film cooler cleaner is provided for remote maintenance of the film cooler.	

3.4.4.8 Temperature Elements

Requirement: Temperature elements within the HMP system shall be installed in thermowells to allow for removal without interrupting the process. [Section 11.16, ORD, ROIN: 1-40037]

Basis Discussion: None.

Verification: Verification is expected to be achieved through the following:

Verif. Method	Verif. By	Plan	Notes/Comments
I	ENG	Review design to verify temperature elements are installed in thermowells.	

3.5 Melter Requirements

3.5.1 Mission and Functional/Performance Requirements (Including States/Modes)

3.5.1.1 Melter Design and Operating Conditions

3.5.1.1.1 Codes and Standards

Requirement: [HOLD] The HLW melter shell shall be designed to AISC M016, *ASD Manual of Steel Construction*, ANSI/AISC N690, *Specification for the Design, Fabrication and Erection of Steel Safety-Related Structures for Nuclear Facilities*, *ASME Boiler & Pressure Vessel Code II*, AWS D1.1, *Structural Welding Code; Steel*, and AWS D1.6, *Structural Welding Code, Stainless Steel.* [Section 4.4.8.4, PDSA – HLW Facility, ROIN: 1-21667] [Section 4.1, Safety Criterion 4.1-2, 4.1-4, Appendix C 9.0, SRD, ROIN: 1-38650, ROIN: 1-38651, ROIN: 1-38659, ROIN: 1-38658, ROIN: 43-1299]

Basis Discussion: The requirements in AISC combined with ASME Boiler & Pressure Vessel Code (Section II) are used to ensure the melter/vessel structure is designed for allowed stresses and will not collapse under assumed loads. The requirements in AISC combined with ASME Boiler & Pressure Vessel Code (Section IX), AWS D1.1, Structural Welding Code; Steel, and AWS D1.6, Structural Welding Code; Stainless Steel, are used to ensure the materials of construction, including the welds, are selected for the required ductility to accommodate potential thermal warping.

Currently the PDSA states the melter shell is to be SC-II and states the melter shell is to be designed to AISC M016. From the SRD, Appendix C Section 9 states AISC M016 is required for use by the WTP contractor as an

implementing standard for design of structural steel for SC III and SC IV SSCs. The discrepancy between the PDSA and SRD on use of M016 is why the requirement is on HOLD. Note, the SDS states the melter shell to be designed to SC-III, this discrepancy is captured in Section 3.4.1.7. **[ATS-MGT-15-0319]**

Verification: Verification is expected to be achieved through the following:

Verif. Method	Verif. By	Plan	Notes/Comments
A	ENG	Perform an analysis of the HMP melter shell design in accordance with AISC M016, ANSI/AISC N690, ASME Boiler and Pressure Vessel Code, AWS D1.1, and AWS D1.6.	
I	ENG	Review of design to verify conformance to the results of the analysis.	Document in an evaluation/assessment.

3.5.1.1.2 Operating Temperature

Requirement: The HMP melters shall be designed to operate and maintain a nominal glass pool temperature between 1100°C and 1200°C with a target setpoint of 1150°C to vitrify solids. [Section 6.1.3, BOD, ROIN: 40-19792] [Section 6.8.1, WAI Screening of HLW Glass Chemistry Processing Activities, ROIN: 40-23493] (A.2, A.11)

Basis Discussion: Water is evaporated in a cold cap at the surface of the melter and the solids are vitrified at a temperature of about 1150°C.

Verification: Verification is expected to be achieved through the following:

Verif. Method	Verif. By	Plan	Notes/Comments
I	ENG	Review design and vendor documentation to verify melters will normally operate between 1100°C and 1200°C with a target setpoint of 1150°C.	
T	SU/COM	Demonstrate that the melter glass pool can be maintained between 1100°C and 1200°C with a target setpoint of 1150°C.	

3.5.1.1.3 Feed Nozzles

Requirement: The HMP design shall include a means to prevent plugging of the melter feed lines through the melter feed nozzles to ensure operability. (A.1.2)

Basis Discussion: The melter feed is transferred from the melter feed vessels (MFVs) (HFP-VSL-00002 and HFP-VSL-00006) to the HLW melter feed nozzles by dedicated ADS pumps and feed lines to support melter throughput design. The melter feed nozzles are installed in the melter lid.

Verification: Verification is expected to be achieved through the following:

Verif. Method	Verif. By	Plan	Notes/Comments
I	ENG	Review design to verify melter feed lines have been designed with a means to prevent plugging.	

3.5.1.1.4 Loadings in Addition to Seismic

Requirement: The melters shall withstand static loads including the weight of the structures, permanent equipment, piping, circulated fluids, ventilation and cooling piping, molten glass, refractory, and loads due to relative thermal expansion. [Section 15.3.4, BOD, ROIN: 1-41563]

Basis Discussion: None.

Verification: Verification is expected to be achieved through the following:

Verif. Method	Verif. By	Plan	Notes/Comments
A	ENG	Perform analysis of all applicable loads for each structural component of the melter to verify the melters can withstand static loading per the requirement.	
I	ENG	Review design to verify conformance to analysis.	Document in evaluation/assessment.

3.5.1.1.5 Refractory Expansion Control

Requirement: The HLW melter design shall include a refractory expansion control configuration using jackbolts to ensure no gaps exist in the joints to prevent molten glass penetration. [Section 15.3.3, BOD, ROIN: 40-412]

Basis Discussion: Thermal expansion of the melter glass pool refractory is managed by the use of a jackbolt system. The jackbolt system is a series of spring-loaded bolts that push the refractory brick together to prevent the formation of gaps between the bricks. It is important to prevent the formation of gaps between the melter bricks, once they are hot, to prevent glass from seeping into the gaps and potentially leaking from the melter. Each jackbolt consists of a pressure pad, spring assembly, shaft, and bushings. The jackbolts penetrate the wall modules and may be exposed to plenum gases hence they are fabricated from a corrosion resistant alloy.

Verification: Verification is expected to be achieved through the following:

Verif. Method	Verif. By	Plan	Notes/Comments
I	ENG	Review design and/or vendor documentation to verify jackbolts are used to control thermal expansion of the refractory.	

3.5.1.1.6 Agitators – Bubblers

Requirement: The design shall include bubblers to inject compressed gas (air from the ISA system) continuously into the molten glass pool in order to provide agitation to aid the mixing of the melter cold cap with the rest of the glass pool. [Section 15.3.3, BOD, ROIN: 8-3499, ROIN: 1-41554] (A.3)

Basis Discussion: Bubblers work by injecting compressed gas continuously through nozzles located near the bottom of the glass pool. As the gas bubbles rise, they carry glass upward with them causing forced circulation within the glass pool. Agitation of the glass pool distributes heat generated in the glass by the electric current and increases circulation to the melt surface that helps melt or dissolve the underside of the cold cap.

Verification: Verification is expected to be achieved through the following:

Verif. Method	Verif. By	Plan	Notes/Comments
A	ENG	Perform analysis for the integration of the gas flow with the molten glass to verify bubblers will aid the mixing of the melter cold cap with the rest of the glass pool.	
I	ENG	Review design to verify sufficient bubblers have been incorporated.	

3.5.2 Nuclear Safety, ALARA, Environmental, and Other Regulatory Requirements

3.5.2.1.1 Confinement of Offgas

Requirement: The HLW melters shall be designed and operated under a negative pressure by the HOP system to provide primary confinement of offgases. The melter plenum shall be maintained at a vacuum. The melter shall be maintained at a negative pressure with air in-leakage from the melter cave. [Safety Criterion 4.2-1, SRD, ROIN: 8-496] [Sections 5.1.2, 12.3.1.1, 15.3.3, BOD, ROIN: 1-40438, ROIN: 8-3550, ROIN: 1-40441, ROIN: 1-41247, ROIN: 1-41559] [Sections III.10.J.1.c.ix, III.10.K.1.c.x, DWP, ROIN: 2-7154, ROIN: 2-7255] (A.6)

Basis Discussion: The pressure differential between the melter cave and the inside of the melter is maintained so as to create the air in-leakage from the melter cave to reduce the deposition of corrosive materials to the spaces between the gas barrier and the refractory. The melter pressure is maintained by the offgas HOP system and works in conjunction with the melter to confine offgas. Controlled air is injected into the offgas line just above the film cooler to accommodate small surges that occur. Section 15.3.3 of the BOD states HLW melter does not have a dedicated ventilation system. [ALARA]

Based on the following report, *Analysis of HOP System Operations with the HLW Melter Offgas/Vessel Ventilation Dynamic Pressure and Control Model*, SCT-M0SRLE60-00-194-00002, Rev. 00A, the melter plenum pressure is controlled to maintain an average vacuum of -5.0 in WC with respect to the melter cave. Refer to section 2 of the report.

Current available calculations 24590-HLW-M4C-HOP-00011, Rev. 1, HLW Melter Offgas System Basis Flow sheet, states from table 1 the process inputs for flow cases from the melter are, minimum -3 in WC, nominal -5 in WC, maximum -5 in WC, and bounding -6 in WC with respect to the melter cave which references these values from report SCT-M0SRLE60-00-194-00002, Rev. 00A, *Analysis of HOP System Operations with the HLW Melter Offgas/Vessel Ventilation Dynamic Pressure and Control Model.*

Section 3.3.B.2.b of (24590-HLW-3PS-AE00-T0001, Rev. 5, *Engineering Specification for High Level Waste Melters)* calls for the plenum pressure to be -5 in WC with respect to the melter cave).

Verification: Verification is expected to be achieved through the following:

Verif. Method	Verif. By	Plan	Notes/Comments
A	ENG	Perform analysis to verify the melters are designed and operate under a negative pressure (nominal (**TBD**) in WC) with air in-leakage to the melter from the melter cave.	
A	ENG	Perform analysis to determine the maximum air in-leakage to the melter from the melter cave.	
I	ENG	Review design to verify conformance with analysis.	

Verif. Method	Verif. By	Plan	Notes/Comments
T	SU/COM	Perform an integrated test to verify the melter plenum pressure can be maintained at a nominal (**TBD**) in WC with respect to the melter cave with air in-leakage from the melter cave during slurry feeding.	

3.5.3 System Interface Requirements

3.5.3.1 HMP – HMH Interface

Requirement: The HLW HMP melters shall be designed to interface with the HMH system to accommodate replacement and removal of a new melter or spent melter to and from the melter caves. (H.1)

Basis Discussion: [ALARA]

Verification: Verification is expected to be achieved through the following:

Verif. Method	Verif. By	Plan	Notes/Comments
I	ENG	Review design to verify the HMH system interfaces with the HMP system and allows for transporting new and spent melters to and from melter caves.	

3.5.3.2 HMP Feed

Requirement: The HMP system shall receive a slurry mixture of pretreated waste and glass-forming chemicals from the HFP system to support melter design capacity. [Sections 15.3.1, 15.3.3 BOD, ROIN: 1-41551, ROIN: 1-41553, ROIN: 8-1290A] (A.1)

Basis Discussion: None.

Verification: Verification is expected to be achieved through the following:

Verif. Method	Verif. By	Plan	Notes/Comments
I	ENG	Review design to verify HMP receives a slurry feed from the HFP system.	

3.5.4 Other Technical, Specialty, Operations and Maintenance Requirements

3.5.4.1 Melter Shell Drain

Requirement: Each melter shall be designed to have a drain with a sealing mechanism (i.e. check valve or equivalent) between the shell and the glass pool refractory to remove PCW in the event the cooling panels leak. (A.9)

Basis Discussion: The drain will prevent the backup of water in the event of a cooling water leak or the uncontrolled addition of water from other sources.

Verification: Verification is expected to be achieved through the following:

Verif. Method	Verif. By	Plan	Notes/Comments
I	ENG	Review design to verify drains have been incorporated into the design and have a sealing mechanism, i.e. check valve or equivalent.	

3.5.4.2 Leak Detection

Requirement: The melters shall be provided with a leak detection system that will detect within 24 hours the failure of the primary or secondary containment structure or the presence of any release of dangerous and/or mixed waste. [Sections 14.10.1.2, 14.10.1.3, BOD, ROIN: 1-41498, ROIN: 1-41515] (C.3, D.2)

Basis Discussion: Between the cooling panels and the melter shell is a leak detection device which monitors backpressure of a small airflow to provide indication of leaking molten glass from failure of the containment system. [ALARA]

Verification: Verification is expected to be achieved through the following:

Verif. Method	Verif. By	Plan	Notes/Comments
I	ENG	Review design to verify leak detection capabilities within 24 hours.	
D	SU/COM	Demonstrate a leak between the cooling panels and melter shell by simulating a signal and verify the system responds appropriately.	

3.5.4.3 Structural Bracing and Guide Tubes in the Melter Lid

Requirement: The melter lid shall be designed with structural bracing and guide tubes for SSCs penetrating the melter lid. [Section 15.3.3, BOD, ROIN: 8-4702]

Basis Discussion: Guide tubes will aide in the placement and removal of consumables and the temporary start-up heater. Structural bracing will support these SSCs.

Verification: Verification is expected to be achieved through the following:

Verif. Method	Verif. By	Plan	Notes/Comments
I	ENG	Review design to verify bracing and guide tubes are incorporated into the lid design.	

3.5.4.4 Modularization of Bubblers and Level Detectors

Requirement: Consumable components, those having a design life of less than 5 years shall be modularized and otherwise designed for replacement and disposal to minimize onsite fabrication and replacement time. [Section 7.4, ORD, ROIN: 1-39957, ROIN: 8-493] [Sections 11.4.4, 15.3.1, 15.3.3, 15.3.5, BOD, ROIN: 8-6563, ROIN: 8-3496, ROIN: 8-3500, ROIN: 8-3509] (A.3, A.4)

Basis Discussion: As documented in the Duratek report 24590-101-TSA-W000-0010-407-679, *95% Design Report – HLW Melter Life Report*, level detectors, bubblers, and thermowells including thermocouples on the bubbler assemblies have an expected design life of one year or less due to direct contacts with molten glass. [ALARA]

Verification: Verification is expected to be achieved through the following:

Verif. Method	Verif. By	Plan	Notes/Comments
I	ENG	Review design to verify melter consumable components have been designed for routine change out.	Document in an evaluation/assessment.
D	SU/COM	Demonstrate melter consumable components change out per the 24590-WTP-PL-RACT-RT-0001, *WTP Remotability Verification Plan*.	

3.6 Discharge Chamber Requirements

3.6.1 Mission and Functional/Performance Requirements (Including States/Modes)

3.6.1.1 Discharge Chamber

Requirement: The HLW melter shall have two identical and independently operated glass discharge systems located adjacent to each other on a long side of the melter. The glass discharge systems shall include the melter glass level detectors, canister, canister glass level detection, riser, airlift lance, trough, and a heated discharge chamber. [Section 15.3.1, BOD, ROIN: 8-3494] (A.7, A.8)

Basis Discussion: None.

Verification: Verification is expected to be achieved through the following:

Verif. Method	Verif. By	Plan	Notes/Comments
I	ENG	Review design to verify each melter has two discharge chambers with glass level detectors, canister glass level detection, a riser, airlift lance, trough, and a heated discharge chamber.	

3.6.1.2 Design Capacity

Requirement: Each HLW melter discharge chamber shall be capable of supporting the required melter design capacity individually. [Section 15.3.1, BOD, ROIN: 8-3494] (A.8)

Basis Discussion: None.

Verification: Verification is expected to be achieved through the following:

Verif. Method	Verif. By	Plan	Notes/Comments
I	ENG	Review design to verify each discharge chamber individually can support throughput.	

3.6.1.3 Discharge Rate

Requirement: The rate of glass discharge shall be controlled by adjusting the rate at which the air and gas mixture is injected into the bottom of the riser. The glass discharge from the melter shall be initiated by injecting air from the ISA system or an inert gas, argon from the miscellaneous gases system (MXG) at the bottom of the airlift riser. The glass shall be transferred from the melter through the discharge chambers to canisters. [Section 6.1.3, BOD, ROIN: 40-19792] (A.7, B.1)

Basis Discussion: ISA supplies air so that gas bubbles rise in the airlift riser, they entrain glass in the riser to the inlet of the pour trough. The glass then flows down the pour trough and into the waste canister. Argon is used to reduce glass oxidation between discharge cycles. The melter glass pool level drop during pours can be used to determine glass pour rate (as opposed to canister level gain).

Verification: Verification is expected to be achieved through the following:

Verif. Method	Verif. By	Plan	Notes/Comments
A	ENG	Perform an analysis to determine the required flow rate of ISA to verify the ability and capacity to discharge molten glass.	
I	ENG	Review design to verify ISA and Argon are supplied to the melter for discharging glass.	
D	SU/COM	Demonstrate that the flow rate of glass discharge can be controlled by altering the rate at which ISA and Argon is injected into the bottom of the riser to support throughput rates.	

3.6.1.4 Pour Spout and Support Arm

Requirement: The HMP pour spout and support arm shall be designed to prevent scratching or damaging the canisters. Materials used in the design to prevent scratch or damaging of the canisters shall not be organic, explosive, pyrophoric, or combustible. [Section 6.8.2, WAI Screening of HLW Glass Chemistry Processing Activities, ROIN: 43-2038, ROIN: 43-2039, ROIN: 43-2040]

Basis Discussion: None.

Verification: Verification is expected to be achieved through the following:

Verif. Method	Verif. By	Plan	Notes/Comments
I	ENG	Review design to verify the pour spout and support arm have been designed to prevent scratching or damaging the canisters and verify materials used are not organic, explosive, pyrophoric or combustible.	

3.6.2 Nuclear Safety, ALARA, Environmental, and Other Regulatory Requirements

None.

3.6.3 System Interface Requirements

None.

3.6.4 Other Technical, Specialty, Operations and Maintenance Requirements

None.

3.7 Electrical Requirements

3.7.1 Mission and Functional/Performance Requirements (Including States/Modes)

3.7.1.1 Required Power

Requirement: The HLW melter power supplies and electrical buses shall be designed to support future operation for the second generation melters to melt the glass and maintain the melt pool between 1100°C and 1200°C with a target setpoint of 1150°C to vitrify solids at the design throughput capacity of 7.5 MTG/day. [Sections 6.1.3, 15.3.7, BOD, ROIN: 40-19792, ROIN: 8-4706] (A.11)

Basis Discussion: None.

Verification: Verification is expected to be achieved through the following:

Verif. Method	Verif. By	Plan	Notes/Comments
A	ENG	Perform an analysis to determine the required power for each second generation melter to melt the glass and maintain the melt pool between 1100°C and 1200°C with a target setpoint of 1150°C to vitrify solids.	
A	ENG	Perform an analysis to verify extension buses are capable of carrying the current and voltage required.	
I	ENG	Review design to verify sufficient power is provided for the second generation melters and extension buses are capable of carrying the current and voltage required.	

3.7.1.2 Discharge Heaters

Requirement: The HLW melter discharge chambers shall be designed with a means to prevent discharging glass from solidifying during the pouring process into canisters. (A.12)

Basis Discussion: None.

Verification: Verification is expected to be achieved through the following:

Verif. Method	Verif. By	Plan	Notes/Comments
A	ENG	Provide an analysis to determine an appropriate means to prevent glass from solidifying during the pouring process into canisters.	
I	ENG	Review design to verify an appropriate means to prevent discharging glass from solidifying during the pouring process into canisters.	

3.7.1.3 Melter Temporary Startup Heaters

Requirement: The heat for the HLW melter startup shall be provided by temporarily installed radiant electric heaters mounted through the lid of the melter. The startup heaters shall melt the starter charge of frit sufficiently to make it conductive between the melter's joule-heating electrodes. [Section 15.3.7, BOD, ROIN: 8-3513] (A.10)

Basis Discussion: The startup heaters provide a conducting path for the joule-heaters. Once this path is established, the melter will then be heated in a controlled manner by passing more and more current between the

electrodes through the glass, process known as joule-heating. Power to the startup heaters is supplied by the LVE system.

Verification: Verification is expected to be achieved through the following:

Verif. Method	Verif. By	Plan	Notes/Comments
A	ENG	Perform analysis on startup heaters to verify they can sufficiently melt the starter frit and allow for joule-heating.	
I	ENG	Review design and analysis to verify conformance.	
D	SU/COM	Demonstrate that the startup heaters can melt the starter charge frit sufficiently to provide a conductive path between the joule-heating electrodes.	

3.7.1.4 Cable Penetrations

Requirement: Cables passing from out-cell/out-cave to in-cell/in-cave supporting the HMP system shall be designed via offset tubes, or equivalent design, sealed at the out-cell/out-cave side to facilitate cable removal and replacement, and to ensure containment. The out-cell/out-cave termination point shall be higher than in-cell/in-cave side. [Section 14-8, ORD, ROIN: 8-7843, ROIN: 8-7843A, ROIN: 8-7843C]

Basis Discussion: None.

Verification: Verification is expected to be achieved through the following:

Verif. Method	Verif. By	Plan	Notes/Comments
I	ENG	Review design to verify cable penetrations are designed via offset tubes or equivalent, sealed on the out-cave side, and the out-cave termination point is higher than the in-cave side	

3.7.2 Nuclear Safety, ALARA, Environmental, and Other Regulatory Requirements

3.7.2.1 Ungrounded Melter Electrode Power Supply

Requirement: The HLW melter electrode power supplies MVE-PSUP-30001 and MVE-PSUP-30003 shall be ungrounded and be equipped with ground fault detection. [Section 8.8.1.2, BOD, ROIN: 2-39166] (A.11)

Basis Discussion: Current travels through the glass causing it to heat up. This circuit is isolated from grounding to eliminate any stray current paths. The circuit is said to float above ground. All of the penetrations from the glass pool to or through the melter shell are insulated to maintain this isolation. 24590-CM-POA-EBB0-00004-03-00003, *Technical Description – HLW Melter Power Supply – Control* documents that the electrode power supplies come equipped with a ground fault and is for personnel and equipment protection.

Verification: Verification is expected to be achieved through the following:

Verif. Method	Verif. By	Plan	Notes/Comments
I	ENG	Review design to verify the HLW melter electrode power supply is ungrounded and is provided with ground fault detection capability.	
T	SU/COM	Perform a test to verify that the melter electrode power supplies remain ungrounded during normal operations through use of the ground fault detector.	

3.7.3 System Interface Requirements

3.7.3.1 Non-Safety LVE Power

Requirement: Power to the HLW melter discharge and startup heaters shall be provided by the non-safety 480V low voltage electrical (LVE) power distribution system. [Section 8.3.6.1, BOD, ROIN: 1-40767] (A.10, A.12)

Basis Discussion: One 480V feeder is routed from each A and B source to a discharge heater power supply. Each heater power supply converts the 3-phase, 480V input to a single-phase variable voltage output at the power level required by the heater. The startup heaters are LVE-PSUP-30003 and LVE-PSUP-30010. The discharge heater power supplies are LVE-PSUP-30002 and LVE-PSUP-30009.

Verification: Verification is expected to be achieved through the following:

Verif. Method	Verif. By	Plan	Notes/Comments
I	ENG	Review design to verify discharge and startup heaters are supplied 480V power from the LVE system.	

3.7.3.2 Non-Safety MVE Power

Requirement: Power for the HLW melter's electrodes shall be provided by a Static Power Supply (SPS) which consists of two 50% units that are fed by the HLW facility 13.8-kV switchgear. [Section 8.3.3, BOD, ROIN: 1-40758, ROIN: 1-40759] (A.11)

Basis Discussion: If one of the two 50% units is lost, the remaining unit will be capable of supplying enough power to maintain the melter in an idle mode until full power is restored. Power variations from melter operations are mitigated so they do not cause problems (such as harmonics, power factor) with other equipment of the power distribution system supplying the melter power supplies.

Verification: Verification is expected to be achieved through the following:

Verif. Method	Verif. By	Plan	Notes/Comments
I	ENG	Review design to verify that static power supplies consist of two 50% units and are fed from the HLW 13.8-kV switchgear.	

3.7.3.3 Grounding of the Melter

Requirement: The HLW melters, metal sections of the melter and discharge chamber lids, base, structure, and enclosure shall be electrically interconnected and shall be grounded via contact between the facility rails and the wheels of the melter base in accordance with Article 250 of NFPA 70-1999. [Sections 8.8.1.3, 15.3.7, BOD, ROIN: 1-40855, ROIN: 8-4713] (A.11)

Basis Discussion: None.

Verification: Verification is expected to be achieved through the following:

Verif. Method	Verif. By	Plan	Notes/Comments
I	ENG	Review design to verify melter structural components are electrically interconnected and grounded via contact with the rails and wheels in accordance with Article 250 of NFPA 70-1999.	

3.7.3.4 Air Cooled Electrodes and Electrode Extensions

Requirement: The electrodes shall be cooled by forced air and have forced air cooled electrode extensions which interfaces with the PCJ system for temperature monitoring. [Section 15.3.7, BOD, ROIN: 8-4709, ROIN: 8-4711] (C.2)

Basis Discussion: Active cooling of the electrodes and extensions by the ISA system and the use of a water-cooling jacket mitigates glass from migrating through the refractory package adjacent to the electrode extension penetrations. Electrode cooling reduces wear and mechanical deformation which assures that the electrode will last the life of the melter. All other electrical bus and connections are passively cooled.

Verification: Verification is expected to be achieved through the following:

Verif. Method	Verif. By	Plan	Notes/Comments
A	ENG	Perform analysis to determine electrode and electrode extension exhaust temperatures for normal operating conditions.	
I	ENG	Review design to verify the electrodes and electrode extensions are air cooled by the ISA system and interfaces with the PCJ system for temperature monitoring.	
D	SU/COM	Demonstrate forced air by the ISA system can cool the electrodes and electrode extensions. The electrode and electrode extensions exhaust temperature shall be below (**TBD**) as monitored by the PCJ system.	

3.7.3.5 Instrumentation Grounding

Requirement: Instrumentation grounding shall be provided by a single point connection to the facility ground in accordance with NEC, IEEE 1100, IEEE 1050, and the manufacturer's requirement. [Sections 8.8.1.2, 8.8.1.3, BOD, ROINS: 2-39171, ROINS: 8-6991]
Basis Discussion: None.

Verification: Verification is expected to be achieved through the following:

Verif. Method	Verif. By	Plan	Notes/Comments
I	ENG	Review design to verify the HMP instrumentation has a single point connection to the facility ground per the identified codes and standards and manufacturer's requirement.	

3.7.3.6 HLW LVE System – Melter Output Transformer Cooling Water

Requirement: The HLW melter LVE output transformers shall interface with the HLW PCW. The PCW shall supply cooling water to and receive return water from the melter output transformers to prevent overheating during normal operation and loss of power events. (D.1)

Basis Discussion: The melter output transformers use cooling water to maintain normal operating temperatures for the main power components of the system. System interface occurs at the supply and return nozzles on the equipment.

Verification: Verification is expected to be achieved through the following:

Verif. Method	Verif. By	Plan	Notes/Comments
A	ENG	Perform analysis of system to determine the required cooling water flow rate to be delivered to the melter output transformers to meet cooling demand to prevent overheating during normal operation and loss of power events.	Document in an evaluation/assessment.
I	ENG	Review of design for conformance to the analysis results.	Document in an evaluation/assessment.

3.7.3.7 HLW MVE System – Melter Power Supply Cooling Water

Requirement: The HLW melter MVE power supplies shall interface with the HLW PCW. The PCW shall supply cooling water to and receive return water from the melter output transformers to prevent overheating of the power supplies during normal operation and loss of power events. (D.1)

Basis Discussion: The melter power supplies (MVE-PSUP-30001and MVE-PSUP-30003) use cooling water to maintain normal operating temperatures for the main power components of the system. The cooling water flow to each power supply is further distributed to lineup A and to lineup B. System interface occurs at the supply and return nozzles on the equipment.

Verification: Verification is expected to be achieved through the following:

Verif. Method	Verif. By	Plan	Notes/Comments
A	ENG	Perform analysis of system to determine required flow rates to be delivered to each melter power supply to meet cooling demand to prevent overheating during normal operation and loss of power events.	Document in an evaluation/assessment.
I	ENG	Review of design for conformance to the analysis results.	Document in an evaluation/assessment.

3.7.4 Other Technical, Specialty, Operations and Maintenance Requirements

3.7.4.1 Extension Buses and Bus Jumpers

Requirement: Extension buses and bus jumpers shall be designed to mitigate harmful magnetic coupling with the materials they pass through. [Section 15.3.7, BOD, ROIN: 8-4707]

Basis Discussion: None.

Verification: Verification is expected to be achieved through the following:

Verif. Method	Verif. By	Plan	Notes/Comments
I	ENG	Review design to verify mitigation of harmful magnetic coupling has been addressed.	

3.7.4.2 Connections

Requirement: HLW melter connections to the extension buses shall allow for thermal expansion and contraction. [Section 15.3.7, BOD, ROIN: 8-4708]

Basis Discussion: None.

Verification: Verification is expected to be achieved through the following:

Verif. Method	Verif. By	Plan	Notes/Comments
I	ENG	Review design to verify connections to the extension buses allow for expansion and contraction.	

3.7.4.3 Melter Startup and Discharge Heater Isolation

Requirement: HLW melter startup and discharge heaters shall be electrically isolated from the melter structure to prevent shorting from the electrically-energized glass pool. [Section 15.3.7, BOD, ROIN: 1-41568]

Basis Discussion: None.

Verification: Verification is expected to be achieved through the following:

Verif. Method	Verif. By	Plan	Notes/Comments
I	ENG	Review design to verify startup and discharge heaters are electrically isolated from the melter structure.	

3.7.4.4 Cable Impacts

Requirement: HMP electrical and instrumentation cables and associated raceways and jumpers within the melter cave which may obstruct consumable change out or which are directly connected to the melter shall be resistant to impacts to prevent damage during remote maintenance of consumable components. [Section 15.3.7, BOD, ROIN: 1-41569]

Basis Discussion: None.

Verification: Verification is expected to be achieved through the following:

Verif. Method	Verif. By	Plan	Notes/Comments
A	ENG	Perform an analysis to determine the impact loads on cables and associated raceways and jumpers inside the melter cave.	
I	ENG	Review design to verify cables, associated raceways and jumpers are resistant to impact loads.	

3.8 Piping Requirements

3.8.1 Mission and Functional/Performance Requirements (Including States/Modes)

3.8.1.1 Codes and Standards

Requirement: The HLW HMP piping and welding shall be designed, fabricated, inspected, and tested in accordance with ASME B31.3, Process Piping, 1996 edition, as tailored in SRD. Control and Instrument tubing

shall be in accordance with B31.3. [Sections 9.5.5, 11.1.2, 11.4.1, 11.7.1, 11.7.6, BOD, ROIN: 45-22822, ROIN: 40-10528, ROIN: 1-41156, ROIN: 1-41204, ROIN: 45-22820] [Sections 4.2, 4.4, Safety Criterion 4.2-3, 4.4-3, Appendix C 26.0, SRD, ROIN: 1-38668, ROIN: 1-38697, ROIN: 2-38491, ROIN: 2-38492, ROIN: 2-38493, ROIN: 45-9966, ROIN: 45-9969, ROIN: 2-22488]

Basis Discussion: The pipe, fittings, flanges, and valves are in accordance with the long stock code descriptions listed in applicable pipe class specifications used for the HMP system. *Engineering Specification for Piping Material Classes General Description and Summary,* 24590-WTP-3PS-P000-T0001, provides a summary listing of all the pipe class specifications used on WTP. Each pipe class sheet lists the design code used for the specific pipe class specification. The pipe, fittings, flanges, and valves used are in accordance with the design code listed on the specific pipe class specification. There are specific numbered in-line components provided by other engineering disciplines that are in accordance with the design code requirements listed in the applicable engineering specification for the specific component. [ALARA]

Verification: Verification is expected to be achieved through the following:

Verif. Method	Verif. By	Plan	Notes/Comments
A	ENG	Perform an analysis of the piping design in accordance with ASME B31.3-1996, as tailored in SRD Appendix C, Section 26.	Documented in an evaluation/assessment that may be performed using a sampling basis.
I	ENG	Review of design to verify conformance with analysis and ASME B31.3.	Documented in an evaluation/assessment that may be performed using a sampling basis.

3.8.1.2 Fully Welded Piping

Requirement: All welded construction shall be designed for, in-cell/in-cave process and hard-to-reach piping that is non-maintainable. [Section 11.7.4, BOD, ROIN: 2-43143]

Basis Discussion: The in-cell/in-cave piping in contact with the HMP provides primary confinement/containment of the process fluid and offgases.
[ALARA]

Verification: Verification is expected to be achieved through the following:

Verif. Method	Verif. By	Plan	Notes/Comments
I	ENG	Review design to verify for fully welded piping for in-cell/cave process and hard to reach piping that is non-maintainable.	Documented in DVR (although not safety, hard-to-reach piping is included).

3.8.1.3 Automatic Valve Operators

Requirement: Automatic valve operator closure devices shall be designed to prevent damage from water hammer. [Section 14.4, ORD, ROIN: 8-7759] [Section 11.7.4, BOD, ROIN: 2-43141]

Basis Discussion: None.

Verification: Verification is expected to be achieved through the following:

Verif. Method	Verif. By	Plan	Notes/Comments
I	ENG	Review HMP design to verify design has determined where slow closing actuators are required for automatic valves to avoid water hammer.	

3.8.1.4 Utility System Connections

Requirement: The design of the utility system connections to the process shall have engineered devices such as air gaps or backflow preventers. [Section 7.1, ORD, ROIN: 8-3578]

Basis Discussion: This prevents possible contamination migration into other systems. [ALARA]

Verification: Verification is expected to be achieved through the following:

Verif. Method	Verif. By	Plan	Notes/Comments
I	ENG	Review design to verify utility system connections have engineered devices such as air gaps or backflow preventers.	

3.8.1.5 Process Valves

Requirement: Remotely operated valves normally repositioned to support processing (this includes support systems) shall have position indication from directly coupled positioning mechanisms unless other indications are available such as flow, level, and pressure. The indication signal shall be visual, mechanical electric, or electronic based on the valve location and type of valve. [Section 14.4, ORD, ROIN: 8-7756]

Basis Discussion: None.

Verification: Verification is expected to be achieved through the following:

Verif. Method	Verif. By	Plan	Notes/Comments
I	ENG	Review design to verify remotely operated valves which support process in bulges or other remote locations are equipped with position indicators as detailed in requirement.	

3.8.2 Nuclear Safety, ALARA, Environmental, and Other Regulatory Requirements

3.8.2.1 Melter Utility Jumpers

Requirement: The HLW melter air and water supply jumpers shall preclude cross connection from the water supply to the air supply connection at the melter or vice versa. [Sections 3.4.1.4.1.5, 5.6.15, PDSA – HLW Facility, ROIN: 40-37615, ROIN: 40-37616, ROIN: 40-37717, ROIN: 40-37718]

Basis Discussion: The bounding glass/water interaction occurs if water is able to reach the interior of the glass pool by routing it through the bubblers that normally inject air into the glass pool. Melter air and water connections reduce the probability of a steam explosion by physically preventing cross connections of air and water. The consequences of this event require further development. Currently WTP has contracted an analysis to determine the outcome.

Verification: Verification is expected to be achieved through the following:

Verif. Method	Verif. By	Plan	Notes/Comments
I	ENG	Review design to verify air and water jumpers including the wall box connectors have mutually exclusive connectors.	Document in an evaluation/assessment.

3.8.3 System Interface Requirements

3.8.3.1 HMP System – Melter Cooling Panels

Requirement: The HMP melter cooling panels shall interface with the HLW PCW and supply cooling water to the cooling panels and receive return water from the melter cooling panels. This functional requirement shall continue to operate during a loss of site power to prevent boiling in the cooling panels. (D.2)

Basis Discussion: The HMP melters use cooling panels to remove heat from the glass contact refractory. HLW PCW is delivered to five individual cooling panels on each melter. System interface occurs at the manual isolation valves located on each supply pipeline and in piping downstream of the manual isolation valve on the return pipeline. See HLW Plant Cooling Water System Design Description, 24590-HLW-3ZD-PCW-00001 for additional information regarding the PCW system.

Verification: Verification is expected to be achieved through the following:

Verif. Method	Verif. By	Plan	Notes/Comments
A	ENG	Perform analysis of system to determine the required cooling water flow rate to be delivered to the HMP melter cooling panels to meet cooling demand.	Document in an evaluation/assessment.
I	ENG	Review of design for conformance to the analysis results.	Document in an evaluation/assessment.
I	ENG	Review design to verify PCW will continue to provide cooling water to the cooling panels during a loss of site power.	Document in an evaluation/assessment.

3.8.3.2 Instrument Service Air (ISA)

Requirement: The HLW HMP piping design shall interface with the ISA system to receive air supply to provide the motive force to operate instruments, pneumatically operated valves, air purges, agitate glass pool, airlifting, means for cooling of equipment, and prevent deposits from forming on the lens of the CCTV and IR cameras. (C.1, C.2)

Basis Discussion: Remote operation reduces personnel exposure.

Verification: Verification is expected to be achieved through the following:

Verif. Method	Verif. By	Plan	Notes/Comments
I	ENG	Review design to verify the HLW HMP instruments, pneumatically operated valves, air purges, agitate glass pool, airlifting, and equipment cooling interface with the ISA system and verify flow rates meet system demand.	Document in an evaluation/assessment

3.8.3.3 Demineralized Water (DIW) Interface

Requirement: The HMP design shall include the capability to provide washing of the offgas film coolers and the standby port on the SBS bypass line with DIW. The HMP shall be capable of cooling the plenum and glass surface prior to introducing feed from the idle condition by use of DIW. (E.1, E.2)

Basis Discussion: The film cooler may be washed by injecting DIW water into the film cooler injection air port. A water flush is manually activated to the film coolers and the standby port on SBS bypass line. As the water reaches the surfaces it flashes to steam mobilizing the solids. These solids either drop back into the melter or are carried with the offgas to be removed by the SBS. Feeding slurry into the melter without a cold cap can lead to rapid steam generation and gross aerosol emissions.

Verification: Verification is expected to be achieved through the following:

Verif. Method	Verif. By	Plan	Notes/Comments
A	ENG	Perform an analysis to determine required flow rate to verify film coolers and standby port on SBS bypass washing capability.	
I	ENG	Review design to verify that DIW has been provided for washing of the film coolers, SBS bypass line, and cooling of the plenum and glass surface prior to introducing feed from the idle condition.	

3.8.4 Other Technical, Specialty, Operations and Maintenance Requirements

3.8.4.1 Flushing, Draining, and Slopes

Requirement: The piping design shall provide the capability to be flushed and drained without traps or seals, unless traps and seals allow operator action for drainage. [Sections 7.1, 14.3, 20.0, ORD, ROIN: 8-3933, ROIN: 1-40065, ROIN: 1-40066, ROIN: 1-40117] [Sections 11.4.1, 16.4.2.7, BOD, ROIN: 1-41158, ROIN: 8-5256]

Basis Discussion: The piping provisions for draining and/or pumping fluid prevents lines from plugging and minimizes contamination levels during equipment maintenance and/or replacement, in support of as low as reasonably achievable (ALARA) design objectives. [ALARA]

For additional details on pipe sloping, see 24590-WTP-GPG-M-027, *Recommended Slopes for Piping System* and 24590-WTP-M6-50-00008, *P&ID Symbols and Legend Sheet 8 of 8*. Level piping for a short distance through wall penetrations, at connections to equipment, and at jumpers is acceptable (Section 14.3, ORD). In-cell instrument air lines connected using flexible jumpers are not considered process piping and are not required to be sloped (Section 7.1, ORD).

Verification: Verification is expected to be achieved through the following:

Verif. Method	Verif. By	Plan	Notes/Comments
I	ENG	Review the piping design (i.e., isometrics, and piping and instrumentation diagrams (P&ID)) to verify flushing and draining capabilities.	Document in an evaluation/assessment.

3.8.4.2 Isolation and Test Points

Requirement: The design shall include isolation and test points with drain and bleed valves on process and service piping (i.e., DIW, ISA, PCW), to allow for removal, replacement, and testing of plant items required during normal operations. [Section 9.1, ORD, ROIN: 8-8067] [Section 11.5.1, BOD, ROIN: 8-3756]

Basis Discussion: [ALARA]

Verification: Verification is expected to be achieved through the following:

Verif. Method	Verif. By	Plan	Notes/Comments
I	ENG	Review design to verify isolation and test points with drain/bleed valves have been incorporated into the design.	

3.9 Monitoring and Controls

3.9.1 Mission and Functional/Performance Requirements (Including States/Modes)

3.9.1.1 Glass Pool Temperature Monitoring

Requirement: The HLW melters glass pool temperature shall be designed to be remotely monitored and automatically controlled through interfacing with the PCJ system. (A.2, A.11)

Basis Discussion: Two thermowells mounted through the melter lid with multiple element thermocouples are used to provide glass temperature feedback control.

Verification: Verification is expected to be achieved through the following:

Verif. Method	Verif. By	Plan	Notes/Comments
I	ENG	Review design to verify a means to measure the glass pool temperature with the capability to monitor remotely with the PCJ system is incorporated in the design at various glass pool depths.	
D	SU/COM	Demonstrate that the temperature indicators, individually and averaged for the glass pool temperature, can be monitored and automatically controlled from the facility control room.	

3.9.1.2 Refractory Temperature Monitoring

Requirement: The HMP design shall include instrumentation to monitor the temperature of the glass pool refractory and interfaces with the PCJ system to remotely monitor refractory temperatures. [Section III.10.K.1.f.vi, DWP, ROIN: 40-19705] (G.1.1)

Basis Discussion: An increase in the refractory temperature could be an indication of bulk glass leaking from the refractory.

Verification: Verification is expected to be achieved through the following:

Verif. Method	Verif. By	Plan	Notes/Comments
I	ENG	Review design to verify instrumentation has been provided to monitor and transmit temperature of the glass pool refractory to the PCJ system.	
D	SU/COM	Demonstrate the capability to monitor refractory temperature from the PCJ system during operations from the facility control room.	

3.9.1.3 Cooling Water Flow and Temperature Monitoring and Recording

Requirement: The HMP design shall include instrumentation to monitor the PCW supply to the cooling panels flow rate and PCW return temperature from the cooling panels and interface with the PCJ system to remotely monitor. [Sections III.10.K.1.e.v, III.10.K.1.f.v, DWP, ROIN: 40-19703, ROIN: 40-19704] (G.1.1)

Basis Discussion: A loss of cooling water could result in loss of bulk glass containment. Instruments specified by the DWP are listed in the verification table below. The DWP requires that a record of cooling water temperature and flow data will be maintained for inspection by the Washington State Department of Ecology.

Verification: Verification is expected to be achieved through the following:

Verif. Method	Verif. By	Plan	Notes/Comments
I	ENG	Review design to verify instrumentation has been provided to monitor and transmit cooling water flow and temperature to the PCJ system.	
D	SU/COM	Demonstrate the capability to monitor and record cooling water flow and temperature during operations from the PCJ system in the facility control room.	

3.9.1.4 Glass Pour Stream Monitoring

Requirement: The HMP design shall include a camera for monitoring the glass pour stream and interface with the PTJ system. Closed circuit television video (CCTV) cameras shall be located to give optimum viewing angles and distance to suit the process. [Section 9.3, BOD, ROIN: 1-40904] [Section 12.4, ORD, ROIN: 8-14261] (G.3.1)

Basis Discussion: The BOD has a general requirement to use cameras for viewing operations in high radiation areas or caves. This is a specific requirement from the Air Permit to have pour stream viewing. [ALARA]

Verification: Verification is expected to be achieved through the following:

Verif. Method	Verif. By	Plan	Notes/Comments
A	ENG	Perform an analysis to verify proper placement, distance and view angle for monitoring the glass pour stream.	
I	ENG	Review design to verify cameras are provided for glass pour viewing.	
D	SU/COM	Demonstrate the placement of the pour spout cameras can effectively be used to monitor glass pouring.	

3.9.1.5 HMP Control

Requirement: The HMP system shall have the capability to automatically transition from normal processing to a safe state or idle mode during a casualty event (such as loss of cooling water flow or loss of plenum vacuum) or operator manually initiated through the interfacing PCJ system. [Section 11.10, ORD, ROIN: 9-49, ROIN: 9-52]

Basis Discussion: This requirement applies to the melter power supplies which need to be turned off in the event of a loss of cooling water flow to the melter shell or stopping feed to the melter on a loss of plenum vacuum. Both of which need to be accomplished automatically and faster than 30 minutes based on operator reaction time for a damaging event. [ALARA]

Verification: Verification is expected to be achieved through the following:

Verif. Method	Verif. By	Plan	Notes/Comments
I	ENG	Review design to verify the HMP system has the capability to automatically transition into a safe state or idle mode during a casualty event or manually initiated by an operator through the interfacing PCJ system.	

3.9.1.6 Startup Heater Ramp Rate

Requirement: The HMP melter startup heater controls shall be designed with an automatically controlled initial startup heating ramp rate during the refractory bake-out period. (A.10)

Basis Discussion: A specific heat up schedule for the HLW melters will be developed based on vendor data, engineering judgment, along with any operational data, trends, or observances (Vendor data is not available at this time; ATS 24590-WTP-ATS-QAIS-10-0472 was created to provide this schedule when vendor data is available).

Verification: Verification is expected to be achieved through the following:

Verif. Method	Verif. By	Plan	Notes/Comments
I	ENG	Review design to verify the melter startup heaters and controls are designed with a controlled initial startup heating ramp rate during the bake-out period.	

3.9.1.7 Dangerous Waste and Air Permit Required Monitoring and Controls

3.9.1.7.1 Redundant Melter Plenum Pressure

Requirement: The HMP system shall include redundant pressure measurement in the plenum including non-safety pressure differential transmitters (PDTs) and pressure differential indication (PDIs) to monitor the pressure difference between the plenum and the melter cave. Plenum pressure instrumentation shall interface with the PCJ system for monitoring. [Section 15.3.3, BOD, ROIN: 1-41556] [Table III.10.J.C, DWP, ROIN: 40-19693, ROIN: 40-19694] (A.6, G.1.1)

Basis Discussion: Maintaining a negative pressure in the plenum with respect to the melter cave is critical for off gas confinement. The BOD requires the redundant pressure measurement in the plenum. The DWP specifies two non-safety PDIs and two non-safety PDTs, see DWP Table III.10.J.C for each melter but requires only one set of instruments to be in operation during the melter feed operation. [ALARA]

Verification: Verification is expected to be achieved through the following:

Verif. Method	Verif. By	Plan	Notes/Comments
I	ENG	Review design to verify redundant plenum pressure instruments have been provided that interface with the PCJ system.	
D	SU/COM	Demonstrate that the plenum pressure can be monitored during operations from the facility control room.	

3.9.1.7.2 Plenum Temperature Monitoring and Control

Requirement: The HLW melters shall be designed with instrumentation to monitor plenum temperature and be used to establish/control the rate of feed to the melter to maintain a plenum temperature range of (**TBD**). Plenum temperature instrumentation shall interface with the PCJ system. [Table III.10.J.C, DWP, ROIN: 40-19685, ROIN: 40-19686, ROIN: 40-19687, ROIN: 40-19688] (A.5, G.1.1)

Basis Discussion: See DWP Table III.10.J.C and Appendix A for instruments specified by the DWP. Monitoring of the plenum temperature will be used in determining the feed rate as the plenum temperature is an indication of the state of the cold cap. Increasing slurry-feed rate will decrease the melter plenum temperature (and vice versa) due to increased inventory of evaporating water and due to increased cold cap coverage.

Verification: Verification is expected to be achieved through the following:

Verif. Method	Verif. By	Plan	Notes/Comments
A	ENG	Perform an analysis to determine the normal operating temperature range (**TBD**) for the melter plenum.	
I	ENG	Review design to verify conformance of the normal operating temperature.	
I	ENG	Review the design to verify temperature instrumentation specified are contained within the design and interface with the PCJ system.	
T	SU/COM	Demonstrate the plenum temperatures can be monitored and used by operator to control the feed rate to the melter.	

3.9.1.7.3 Glass Pool Level and Density Monitoring

Requirement: The design shall include monitoring for glass pool level and density and interface with the PCJ system. [Table III.10.J.C, DWP, ROIN: 40-19689, ROIN: 40-19690, ROIN: 40-19691, ROIN: 40-19692] [Section 14.10.1.1, BOD, ROIN: 1-41488] (A.4, B.1, G.1.1)

Basis Discussion: Operators will monitor the glass pool level to determine when to transfer glass to the discharge chamber. NOC ID 625 recommends maintaining the glass level in the glass pool within an approximate one inch band to reduce thermal stresses on the refractory. Abnormal drops in the glass pool level could indicate a leak of bulk glass. Instruments specified by the DWP for glass pool monitoring are listed in DWP Table III.10.J.C and Appendix A.

Verification: Verification is expected to be achieved through the following:

Verif. Method	Verif. By	Plan	Notes/Comments
I	ENG	Review design to verify instrumentation has been provided to monitor the glass pool level and density as specified by the DWP and interface with the PCJ system.	

Verif. Method	Verif. By	Plan	Notes/Comments
D	SU/COM	Demonstrate the capability to monitor the glass pool level and density during operations from the facility control room.	

3.9.1.7.4 Canister Fill Level Detection

Requirement: The HMP design shall have instrumentation to monitor the canister's fill level from either discharge pour spout. [Section 4.3, Appendix C, IHLW, ROIN: 2-38689, ROIN: 8-14291] [Section C.8 1.2.2.1.2, WTP Contract, ROIN: 1-26012] [Table III.10.J.C, DWP, ROIN: 40-19695, ROIN: 40-19697, ROIN: 40-19699, ROIN: 40-19701] [Section 14.10.1.1, BOD, ROIN: 1-41488] (G.1.1, G.3.1)

Basis Discussion: Operators need to determine the level of the glass in the canister to ensure it is not under filled or overfilled (minimum 87% with an average of 95%). The level element for this task required by the DWP Table III.10.J.C is an IR camera with a level indicator that will send a numeric signal to the control room indicating the container level. The current design also provides for transmitting the IR image of the molten glass in the container as a way for operators to view the container level.

Verification: Verification is expected to be achieved through the following:

Verif. Method	Verif. By	Plan	Notes/Comments
I	ENG	Review design to verify instrumentation is provided for canister level detection.	
D	SU/COM	Demonstrate by use of the instrumentation, operator can control the fill height.	

3.9.1.7.5 Air Lift Controls

Requirement: The HMP design shall include manual controls for the air lift lance associated with each discharge chamber and interface with the PCJ system. [Table III.10.J.C, DWP, ROIN: 40-19696, ROIN: 40-19698, ROIN: 40-19700, ROIN: 40-19702] (A.7, G.1.1)

Basis Discussion: The airlift lances assists in raising batches of molten glass from the glass pool into the discharge chambers by injecting air or an inert gas at the bottom of the airlift riser. As the gas bubbles rise in the glass, they entrain glass in the riser to the inlet of the trough. Valves and controls specified by the DWP are listed in Appendix A and DWP Table III.10.J.C.

Verification: Verification is expected to be achieved through the following:

Verif. Method	Verif. By	Plan	Notes/Comments
I	ENG	Review design to verify manual controls that interface with the PCJ system have been provided to start and stop airlifting of molten glass for each melter.	
D	SU/COM	Demonstrate airlifting of molten glass can be manually controlled, e.g. start and stop from the facility control room.	

3.9.2 Nuclear Safety, ALARA, Environmental, and Other Regulatory Requirements

3.9.2.1 Seismic Shutdown Signal – Safety Class Interlock

Requirement: The HMP system shall, upon receipt of a seismic shutdown signal from the PPJ, automatically close the ISA and DIW isolation valves for the service piping directly connected to the melters. [Sections 4.3.21, 4.3.21.3, PDSA - HLW Facility, ROIN: 45-31493, ROIN: 40-25064, ROIN: 45-31512] (G.2.3)

Basis Discussion: The seismic shutdown signal interlocks mitigate post-seismic event consequences by performing required actions to achieve a safer facility state. See Appendix A for a listing of HMP isolation valves which respond to a seismic shutdown event. Isolation of power to the non-safety power supplies is accomplished by the LVE and MVE systems.

Verification: Verification is expected to be achieved through the following:

Verif. Method	Verif. By	Plan	Notes/Comments
I	ENG	Review the control logic design to verify automatic activation of the interlocks in response to the seismic shutdown signal from the PPJ system.	Documented in DVR.
D	SU/COM	Demonstrate the HMP interlocks are activated automatically in response to a seismic shutdown signal from the PPJ system.	

3.9.2.2 Melter Plenum Pressure – Safety Significant Interlock

Requirement: [**HOLD**] The HMP melters shall interface with the safety PPJ system when a (**TBD** setpoint) pressure is reached over a (**TBD**) period of time in the melter plenum. The safety PPJ system will receive an interlock shutdown signal to stop the HFP ADS pumps to stop the transferring feed to the HLW melters by closing isolation valves for the ADS air supply. [Section 3.3.5.1.8, PDSA - HLW Facility, ROIN: 2-18949] (G.2.2)

Basis Discussion: Terminating transfer to the melters when a (**TBD** setpoint) is reached in the melter plenum, which prevents over pressurizing the HLW melter. This requirement is on "HOLD" because the melter plenum pressure safety interlock is not specifically captured in Section 4 of the PDSA and a PIER 24590-WTP-PIER-MGT-14-0626 has been issued to resolve this issue during the development of 24590-HLW-3ZD-HFP-00001, HLW Melter Feed Process (HFP) and Concentrate Receipt Process (HCP) System Design Description. See PIER for additional information regarding this HOLD. [ALARA] **[ATS-MGT-15-0323]** [ALARA]

Verification: Verification is expected to be achieved through the following:

Verif. Method	Verif. By	Plan	Notes/Comments
A	ENG	Perform analysis to determine the melter plenum pressure setpoint (**TBD**) and the duration time (**TBD**) to activate the safety interlock to automatically stop feed.	
I	ENG	Review the control logic design for the capability to automatically terminate transfer from HFP to the melter when a pressure (**TBD**) setpoint is reached over a (**TBD**) period of time in the melter.	Documented in DVR.
T	SU/COM	Perform an integrated test to verify the melter feed will automatically terminate by simulating a signal for pressure (**TBD** setpoint) over a (**TBD**) period of time in the melter plenum while interfacing with the PPJ system to initiate the safety interlock to stop feed.	

3.9.2.3 Melter Plenum Dilution Air Controls and Safety Significant Interlock

Requirement: **[HOLD]** The HMP shall be equipped with a means to control and monitor the melter plenum dilution air to detect low airflow of (**TBD**) provided to the melter plenum. Control and monitoring of the melter plenum dilution air shall interface with the safety PPJ system. The safety PPJ system will receive an interlock shutdown signal to close isolation valves for the ADS air supply (terminates melter feed) within (**TBD**) seconds of detecting low airflow to the melter plenum. (G.2.1)

Basis Discussion: Melter plenum dilution air system reduces the probability of an offgas flammability event by maintaining adequate dilution air in the melter plenum. According to the SDS the melter plenum dilution air system is Not in Current Design and further offgas flammability evaluations are needed to determine the needed dilution air flow. This is currently not captured in the PDSA as a credited safety function and is why this requirement is on "HOLD". This control requirement poses a risk that the analysis necessary for implementation could indicate that the control strategy be altered. **[ATS-MGT-15-0325]**

Verification: Verification is expected to be achieved through the following:

Verif. Method	Verif. By	Plan	Notes/Comments
A	ENG	Perform analysis to determine the offgas flammability, low airflow setpoint (**TBD**), and time (**TBD**) required to detect low airflow to the melter plenum to terminate melter feed.	
I	ENG	Review design to verify monitoring and controls for plenum dilution airflow have been incorporated into the design. Review analysis to verify conformance.	Documented in DVR.
D	SU/COM	Demonstrate the capability to control and monitor the melter plenum dilution air. Demonstrate when low airflow is detected using the PPJ system and interlocks the ADS air supply to terminate melter feed.	

3.9.2.4 Canister Cooling Time – Safety Significant Interlock

Requirement: The HMP melter airlift valves that control glass pours shall interface with the safety PPJ system to initiate an interlock signal to the HPH bogie drive so that the canister cannot be removed from the pour tunnel until sufficient cooling has been achieved. [Sections 4.4.15, 4.4.15.2.1, 4.4.15.2.3, PDSA – HLW Facility, ROIN: 45-9985, ROIN: 45-31878, ROIN: 45-31879] (G.2.4)

Basis Discussion: The interlock allows for the pour to be completed and then ensures the bogie drive cannot be powered for a pre-determined period of time so that the canister can cool. Once the period of time has elapsed, the interlock will be removed and allow power to the bogie drive.

Verification: Verification is expected to be achieved through the following:

Verif. Method	Verif. By	Plan	Notes/Comments
I	ENG	Review HMP airlift design to verify inclusion of the controls to interlock the bogie drive.	Documented in DVR.
D	SU/COM	Demonstrate the interlock which prevents bogie from moving in the pour tunnel until canister has sufficiently cooled based on a wait time.	

3.9.3 System Interface Requirements

3.9.3.1 Programmable Protection System – Active Safety Instruments

Requirement: The HMP instruments with active safety functions are required to interface with the PPJ or be engineered as local safety instrumented functions. Signal interfaces shall use standard 4-20 mA or digital signal contacts. Appendix C provides a list of the HMP active safety instrumented functions and implementing components for the HMP system. [Section 7.1, BOD, ROIN: 1-40609]

Basis Discussion: Active safety instrumentation is implemented independently to the normal control system (PCJ/MHJ) through the PPJ system or in local logic solvers. The PPJ is the main safety system logic solver used on WTP and includes logic programming to implement the active safety controls

Verification: Verification is expected to be achieved through the following:

Verif. Method	Verif. By	Plan	Notes/Comments
I	ENG	Verify required interface included in material requisitions (MRs) used to procure active safety instruments.	DVR may include this review.

3.9.3.2 Implementation of Active Safety Instrumented Functions

Requirement: The active safety instrumented functions for the HMP system shall be designed in accordance with the safety criterion 4.3-1, 4.3-3, 4.3-4, 4.3-6, 4.4-1 and 4.4-2 of 24590-WTP-SRD-ESH-01-001-02, Safety Requirements Document Volume II. [Safety Criterion, 4.3-1, 4.3-3, 4.3-4, 4.3-6, 4.4-1 and 4.4-2, SRD, ROIN: 1-38671, ROIN: 1-38672, ROIN: 1-38676, ROIN: 1-38677, ROIN: 1-38679, ROIN: 1-38680, ROIN: 1-38684 ROIN: 1-38685, ROIN: 1-38690, ROIN: 1-38691, ROIN: 1-38693, ROIN: 1-38694, ROIN: 8-498, ROIN: 8-3520, ROIN: 8-3521, ROIN 8-6580]

Basis Discussion: The SRD establishes the criterion and applicable standards for the safety design. The design processes including 24590-WTP-GPG-J-015, *Safety Instrumented System Implementation* and electrical design criteria are used to ensure independence and that the design complies with the mandated standards. The completed designs are documented in Safety Systems Requirements Specification and other design documents, which are required to be verified to ensure compliance with the standards.

Verification: Verification is expected to be achieved through the following:

Verif. Method	Verif. By	Plan	Notes/Comments
I	ENG	Verify the Safety Systems Requirements Specifications and designs are in accordance with the criterion and standards in safety criterion 4.3-1, 4.3-3, 4.3-4, 4.3-6, 4.4-1 and 4.4-2 of 24590-WTP-SRD-ESH-01-001-02, Safety Requirements Document Volume II.	DVR may include this review.

3.9.3.3 Implementation of Active Safety Instrumented Functions

Requirement: The HMP system, SC safety instrumented functions shall be designed in accordance with safety criterion 4.3-2 and 4.3-5 of 24590-WTP-SRD-ESH-01-001-02, Safety Requirements Document Volume II. [Safety Criterion, 4.3-2 and 4.3-5, SRD, ROIN: 1-38674, ROIN: 1-38675, ROIN: 1-38682, ROIN: 1-38683]

Basis Discussion: For safety instrumented functions required to meet the single failure criterion, additional work related to fire zone separation and a detailed single failure analysis following the guidance in 24590-WTP-GPG-

ENG-0159, *Single Failure Analysis Process for Mechanical, HVAC and Control Systems,* is required. The completed designs are documented in Safety Systems Requirements Specification and other design documents, which are required to be verified to ensure compliance with the standards.

Verification: Verification is expected to be achieved through the following:

Verif. Method	Verif. By	Plan	Notes/Comments
I	ENG	Verify the Safety Systems Requirements Specifications and designs are in accordance with the criterion and standards in safety criterion 4.3-2 and 4.3-5 of 24590-WTP-SRD-ESH-01-001-02, Safety Requirements Document Volume II.	DVR may include this review.

3.9.3.4 Process Control System – Instruments

Requirement: Instruments connected to the PCJ system shall not perform any active safety function. Instruments connected to the PCJ may include and perform safety boundary or retention functions. HMP instruments shall use standard commercially available instrumentation and communication protocols to interconnect to the PCJ system. Fieldbus or Modbus communication may be used. [Section 9.4.1, BOD, ROIN: 1-40908]

Basis Discussion: The PCJ is used as the normal process control system. The PCJ allows remote operator control and monitoring of the HMP processes (e.g., provisions for process level, temperature, pressure, and cooling along with the ability to control valves to operate the HMP systems). Alarms and warnings are provided to bring operator attention to, and allow rectification of abnormal process situations.

The instruments are part of the HMP. The system logic and control software is part of the HMP, but resides and is implemented by the PCJ. The software interfaces with software and hardware on other systems to collectively form an integrated control system for WTP.

Verification: Verification is expected to be achieved through the following:

Verif. Method	Verif. By	Plan	Notes/Comments
I	ENG	Perform a design review, including applicable design and procurement documentation, to verify system instruments that interconnect to the PCJ are standard commercially available and not performing an active safety function.	Documented in an evaluation/assessment.

3.9.4 Other Technical, Specialty, Operations and Maintenance Requirements

3.9.4.1 Bypassing of Interlocks and Permissives

Requirement: HMP safety interlocks shall be designed to support a system for bypassing permissives and interlocks with appropriate authority and procedural control that supports maintenance and surveillance testing per ANSI/ISA S84.01 1996, *Application of Safety Instrumented Systems for the Process Industries*, has specific requirements for bypassing safety interlocks. [Sections 11.12.2, ORD, ROIN: 1-40004]

Basis Discussion: This should include: Safety and non-safety interlocks as identified to support maintenance and surveillance testing, radiological and chemo-toxic safety protection, conventional safety protection, plant equipment protection interlocks, and environmental protection. [ALARA]

Verification: Verification is expected to be achieved through the following:

Verif. Method	Verif. By	Plan	Notes/Comments
I	ENG	Review of design to verify that interlocks and permissives have appropriate bypass capability and appropriate authority and procedural controls are in place, as needed and designed to ANSI/ISA S84.01 1996, *Application of Safety Instrumented Systems for the Process*.	Documented in logic diagrams and safety system requirement specifications (SSRS).

3.9.4.2 Process Control System – Remote Control Operations

Requirement: The HMP design shall include the following capabilities that are remotely controlled or monitored by the PCJ system. [Sections 9.4.2, 11.4.1, 11.8.3.1, BOD, ROIN: 1-40909, ROIN: 1-41148, ROIN: 1-41215] [Section 14.4, ORD, ROIN: 1-40069] (G1.1, G.1.2)

Melter:

- The design shall have the capability to remotely monitor and/or control:
  - Monitor and automatically control flow of air to the bubblers
  - Monitor pressure of air to the bubblers
  - Monitor flow of supply cooling water to the cooling panels
  - Monitor temperature of return cooling water from the cooling panels
  - Monitor temperature of refractory thermocouples
  - Monitor and automatically control of air flow to the electrodes and electrode extensions.
  - Monitor and automatically control temperature of the electrodes
  - Monitor individual electrode temperature indicators, will alarm on high rate of change and on differential from the average electrode temperature
  - Monitor joule heating power supply output voltage, current power, and fault diagnostics
  - Monitor plenum temperature indicators, the individual temperature indicators will alarm on high alarm on differential from the average plenum temperature
  - Manually adjust rate of feed based on melter plenum temperature.
  - Monitor individual glass pool temperature indicators, will alarm on high rate of change and on differential from the average glass pool temperature
  - Monitor and automatically control glass pool temperature by adjusting power to the electrode power supply
  - Monitor and automatically control startup heaters power and temperature
  - Monitor and manually control air flow and argon flow for airlifts to the discharge chamber
  - Monitor argon pressure for airlifts
  - Monitor argon pressure at skid HMP-SKID-00003
  - Monitor and automatically control discharge heater temperatures
  - Monitor glass pool level.
  - Monitor glass pool density.
  - Monitor flow and pressure for air flow to the SBS bypass offgas line
  - Monitor flow and pressure for air flow to frit funnel startup
  - Monitor air flow to the film cooler
  - Monitor DIW flow to wash film cooler
  - Monitor air flow for ISA injection to HOP offgas line above film cooler
  - Monitor melter shell leak detection level indicator
  - Monitor plenum pressure primary, secondary, backup shell, and plenum pressure tap pressure differential indicators
  - Monitor and automatically control melter level, melter feed stops on high-high level

Discharge Chamber:

- Monitor the canister level during filling via IR camera.

Electrode Power Supplies

- Monitor and automatically control electrode power supplies including alarms and faults.
- Monitor electrode power supply pressure of return cooling water.
- Monitor electrode power supply flow and temperature of supply cooling water.

Startup Heater Power Supplies:

- Monitor and automatically control startup power supplies including alarms and faults.

Discharge Heater Power Supplies:

- Monitor and automatically control discharge heater power supplies including alarms and faults.

Remote Operated Valves:

- The design shall have the capability to remotely open or close using the PCJ (interlocks are provided via the PPJ).
- The design shall have the capability to transmit the operating position to the PCJ.

Basis Discussion: [ALARA]

Verification: Verification is expected to be achieved through the following:

Verif. Method	Verif. By	Plan	Notes/Comments
I	ENG	Review HMP and PCJ system control design to verify remote monitoring and control capability listed above.	Documented in an assessment.
D	SU/COM	Demonstrate the PCJ remote control operations for all the listed HMP equipment/components on both melter lines.	

3.9.4.3 Programmable Protection System – Remote Control Operations

Requirement: All PPJ monitoring and control functions shall be forwarded to the PCJ system for operator interface. [Sections 7.3.7.4, 9.10, BOD, ROIN: 1-40679, ROIN: 1-41025] (G.2.1, G.2.2, G.2.3, G.2.4)

Basis Discussion: PPJ functions (i.e., interlocks) are covered elsewhere in the document. Design guide 24590-WTP-GPG-J-015, *Safety Instrumented System Implementation*, provides the implementing instructions for this requirement.

Verification: Verification is expected to be achieved through the following:

Verif. Method	Verif. By	Plan	Notes/Comments
I	ENG	Review of design to confirm that all PPJ monitoring and control functions are forwarded to the PCJ.	Documented in logic diagrams and SSRS.
D	SU/COM	Demonstrate all PPJ monitoring and control functions are forwarded to the PCJ.	Recommended to be performed in conjunction with individual PPJ requirements.

3.10 Relevant Codes and Standards

3.10.1 Codes of Record

Table 3-5 identifies relevant external codes and standards applicable to the HMP design. These documents are derived from the collective Code of Record established in the WTP Contract, BOD, and SRD and environmental permits. Use of these documents is typically invoked in the design process through the documents identified in Section 3.10.2. Beyond inclusion here, no attempt is made in this document to extract individual design requirements from these documents for allocation to SSCs.

In some cases, the expected means of verification may be established on the basis of tests or other criteria required by the codes and standards. This does not necessarily include verification or testing more appropriately defined in the procurement of individual sub-systems or components, or verification or testing that is a routine activity defined by specifications and/or procedures used by construction and startup.

Table 3-5 – HLW HMP Applicable Codes and Standards

Implementing Codes and Standards: [Contract No. DE-AC27-01RV14136, WTP Contract]
• Not applicable
Implementing Codes and Standards: [24590-WTP-DB-ENG-01-001, Rev 2, Basis Of Design]
• 10 CFR 835, *Occupational Radiation Protection*
• 29 CFR 1910, *Occupational Safety and Health Standards (OSHA)*
• 29 CFR 1910, Subpart D, *Occupational Safety and Health Administration.* Walking – Working Surfaces, as amended
• 29 CFR 1910, Subpart S, *Occupational Safety and Health Administration.* Electrical, as amended
• 40 CFR 61, *National Emission Standard for Hazardous Air Pollutants*
• 40 CFR 146, *Underground Injection Control Program: Criteria and Standards*
• ASCE 7-98, Minimum *Design Loads in Building and Other Structures*
• ANSI/ASME NQA-2, 1989, *Quality Assurance Requirements for Nuclear Facilities*
• ANSI N323, *American National Standard Radiation Protection Instrumentation Test and Calibration*
• ASME B31.3, 1996, *Process Piping*
• ASME Section II, 2001, *Boiler and Pressure Vessel Code, Material Specifications*
• ASME Section IX, 2001, *Boiler and Pressure Vessel Code, Welding and Brazing Qualifications*
• ASME Section VIII, Division I, *2001, Boiler and Pressure Vessel Code, Rules for Construction of Pressure Vessels*
• AWS D1.1, *Structural Welding Code; Steel*
• AWS D1.6, *Structural Welding Code; Stainless Steel*
• IBC 2000, *International Building Code*
• IEEE Standard 1202, 1991, *Standard for Flame Testing of Cables for Use in Cable Tray in Industrial and Commercial Occupancies*
• IEEE Standard 141, 1986, *Recommended Practice for Electric Power Distribution for Industrial Plants*
• IEEE Standard 260.1, 1993, *American National Standard Letter Symbols for Units of Measurement*
• IEEE Standard 315, 1993, *Graphic Symbols for Electrical and Electronics Diagrams*
• IEEE Standard 399, 1997, *Recommended Practice for Industrial and Commercial Power Systems Analysis*
• IEEE Standard 1202, 1991, *Standard for Flame Testing of Cables for Use in Cable Tray in Industrial and Commercial Occupancies*
• IEEE Standard 338, *Criteria for the Periodic Surveillance Testing of Nuclear Power Generating Station Safety Systems*
• IEEE Standard 384, *Standard Criteria for Independence of Class 1E Equipment and Circuits*
• NEMA WC, 1999, *Wire and Cable Standards*
• NEMA/ICEA, 1999, Power *Cable Ampacities*
• NFPA 101, 1997 and 2000 Editions, *Life Safety Code*
• NFPA 497, 1997, *Recommended Practice for Classification of Hazardous Locations for Electrical Installations in Chemical Process Areas*
• NFPA 70, 1999, *National Electrical Code*
• UL 508, 1999, *Standard for Safety Electrical Industrial Control Equipment*
• WAC 173-303, *Washington Administrative Code - Dangerous Wastes Regulations*
• WAC 246-247, *Radiation Protection – Air Emissions*
Implementing Codes and Standards: [24590-WTP-SRD-ESH-01-001-02, Rev 7F, Section 4, *SRD*]
• AISC M016-89, *Manual for Steel Construction - Allowable Stress Design, Ninth Edition*

• ANSI/ANS 58.8-1994, *Time Response Design Criteria for Safety Related Operator Actions*
• ANSI/ISA 67.04.01-2006, *Setpoints for Nuclear Safety-Related Instrumentation*, as tailored in Appendix C of the SRD
• ANSI/ISA S7.0.01-1996, *Quality Standard for Instrument Air*
• ANSI/AISC N690-94, *Specification for the Design, Fabrication, and Erection of Steel Safety-Related Structures for Nuclear Facilities*
• ASCE 4-98, *Seismic Analysis of Safety-Related Nuclear Structures and Commentary*
• ASCE 7-98, *Minimum Design Loads for Buildings and Other Structures*
• ASME NQA-1-2000, *Quality Assurance Program Requirements for Nuclear Facility Applications*
• DOE G 420.1-1, *Nuclear Safety Design Criteria and Explosive Safety Criteria Guide for Use with DOE O 420.1, Facility Safety Section 2.3*
• DOE Newsletter (Interim Advisory on Straight Winds and Tornados) Dated 1/22/98
• DOE Order 420.1B, *Facility Safety*, as tailored in Appendix C of the SRD
• DOE-STD-1020-94 (Change 1, 1996), *Natural Phenomena Hazards Design and Evaluation Criteria for Department of Energy Facilities*, as tailored in Appendix C of the SRD
• DOE-STD-1021-93 (Reaffirmed with Errata April 2002), *Natural Phenomena Hazards Performance Categorization Guidelines for Structures, Systems, and Components, Section 2.4, Basic Categorization Guidelines, Section 2.5, System Interaction Effects ("Two Over One Protection")*
• DOE-STD-1066-97, *Fire Protection Design Criteria*, as tailored in Appendix C of the SRD
• DOE-STD-3024-2011, *Content of System Design Descriptions*
• IEEE 323-1983, *Qualifying Class 1E Equipment for Nuclear Power Generating Stations*
• IEEE 338-1987, *Standard Criteria for the Periodic Surveillance Testing of Nuclear Power Generating Station Safety Systems*
• IEEE 344-1987 (R1993), *Recommended Practice for Seismic Qualification of Class 1E Equipment for Nuclear Power Generating Stations*
• IEEE 382-1996, *Standard for Qualification of Actuators for Power-Operated Valve Assemblies With Safety-Related Functions for Nuclear Power Plants*
• IEEE 384-1992, *Standard Criteria for Independence of Class 1E Equipment and Circuits*, as tailored in Appendix C of the SRD
• IEEE 628-1987, *Standard Criteria for the Design, Installation, and Qualification of Raceway Systems for Class 1E Circuits for Nuclear Power Generating Stations*
• IEEE 1023-1988, *Guide for the Application of Human Factors Engineering to System, Equipment, and Facilities of Nuclear Power Generating Stations*
• IEEE 1202-1991, *Standard for Flame Testing of Cables for Use in Cable Tray in Industrial and Commercial Occupancies*
• ISA-S7.0.01-1996, *Quality Standard for Instrument Air*
• ISA-S84.01-1996, *Application of Safety Instrumented Systems for the Process Industries*
• NEMA 250, *Enclosures for Electrical Equipment (1000 Volts Maximum)*
• NFPA 70-1999, *National Electrical Code*
• NFPA 101-2000, *Life Safety Code*
• NFPA 497-1997, *Recommended Practice for the Classification of Flammable Liquids, Gases, or Vapors and of Hazardous (Classified) Locations for Electrical Installations in Chemical Process Areas*, as tailored in Appendix C of the SRD
• NFPA 801-2003, *Standard for Fire Protection for Facilities Handling Radioactive Materials*, as tailored in Appendix C of the SRD
• UBC 1997, *Uniform Building Code*
• UL 1581, *Vertical Tray Flame Tests*

3.10.2 WTP Design Criteria, Design Guides, and General Specifications

Table 3-6 identifies relevant discipline design criteria, guides, and general specifications applicable to the HMP system. Use of these documents to develop the detailed design of SSCs is governed by engineering procedures. The majority of requirements contained within these documents is derived from external codes and standards or are specified methods and approaches to achieve standardization and consistency of design. Beyond inclusion here, no attempt is made in this document to extract individual design requirements from these documents for tracing and verification, or to define how direction provided by these documents is applicable and allocated (or not) to individual SSCs.

Table 3-6 - WTP Design Criteria, Design Guides, and General Specifications Applicable to HMP

Document Number	Title
Design Criteria Documents:	
24590-WTP-DC-E-01-001	Electrical Design Criteria
24590-WTP-DC-E-06-001	Design Criteria For Approval Of Electrical Equipment
24590-WTP-DC-E-06-002	Design Criteria for Independence of Safety Equipment and Circuits
24590-WTP-DC-E-07-001	Design Criteria for Electrical Jumpers
24590-WTP-DC-ENG-06-001	Design Criteria for Environmental and Natural Phenomena Hazard Qualification of Structures Systems and Components
24590-WTP-DC-M-06-001	Mechanical Systems Design Criteria
24590-WTP-DC-PS-01-001	Pipe Stress Design Criteria Including "Pipe Stress Criteria" and "Span Method Criteria"
24590-WTP-DC-PS-01-002	Pipe Support Design Criteria
24590-WTP-DC-PS-03-001	Jumper Stress Design Criteria
24590-WTP-DC-ST-01-001	Structural Design Criteria
24590-WTP-DC-ST-04-001	Seismic Analysis and Design Criteria
Design Guides:	
24590-WTP-GPG-ENG-004	Design Guide Pipe Stress, Pipe Layout, and Support Spacing
24590-WTP-GPG-ENG-005	Engineering Design Guide for Pipe Support
24590-WTP-GPG-ENG-033	Evaluation for Seismic Interaction Effects
24590-WTP-GPG-ENG-086	Equipment Environmental Qualification
24590-WTP-GPG-ENG-0094	Pipe Design Work Process
24590-WTP-GPG-ENG-0098	Melter Engineering Document Transmittal Process
24590-WTP-GPG-ENG-0099	Design Verification of Plant Design Deliverables
24590-WTP-GPG-ENG-0103	Equipment Seismic Qualification
24590-WTP-GPG-ENG-0109	Accessibility Review of Equipment and Components
24590-WTP-GPG-ENG-0118	Piping Component Stock Codes
24590-WTP-GPG-ENG-0119	Isometric Drawings Production
24590-WTP-GPG-ENG-0123	Disposition of Hard to Reach Spools
24590-WTP-GPG-ENG-0127	Processing Engineering Calculations
24590-WTP-GPG-ENG-0129	Waste Acceptance Impacting Determination
24590-WTP-GPG-ENG-0130	Waste Acceptance Impacting Item Qualification Plan
24590-WTP-GPG-ENG-0140	Hot Pipe Penetrations Through Concrete
24590-WTP-GPG-ENG-0141	WTP Radiation Damage Thresholds for Non-Metallic Materials
24590-WTP-GPG-ENG-0144	Piping Interface with Flexible Equipment-Stress Analysis Design Guide
24590-WTP-GPG-ENG-0145	SC-IIIE Piping - Stress Analysis Design Guide
24590-WTP-GPG-ENG-0146	Piping Coating System Selection Guide
24590-WTP-GPG-ENG-0149	Piping Classification Guide
24590-WTP-GPG-ENG-0150	Plant Design/Mechanical Systems Equipment Interfaces: Terminal End Equipment
24590-WTP-GPG-ENG-0153	Safety Instrumentation - Independent Protection Layer Identification

Table 3-6 - WTP Design Criteria, Design Guides, and General Specifications Applicable to HMP

Document Number	Title
24590-WTP-GPG-ENG-0159	Single Failure Analysis Process for Mechanical, HVAC, and Control Systems
24590-WTP-GPG-ENG-0165	Pipe Stress and Supports Confirmation
24590-WTP-GPG-J-005	Control Systems Interfaces
24590-WTP-GPG-J-014	Control Systems Design Process Guide
24590-WTP-GPG-J-015	Safety Instrumented System Implementation
24590-WTP-GPG-J-016	Control Valve Sizing
24590-WTP-GPG-J-017	WTP Seismic Category Application to C&I Systems
24590-WTP-GPG-J-0057	Setpoint Calculations
24590-WTP-GPG-M-011	Pipe Sizing for Compressible Flow
24590-WTP-GPG-M-013	Plant Wash System Design
24590-WTP-GPG-M-016	Pipe Sizing for Lines with Liquids Containing Solids - Bingham Plastic Model
24590-WTP-GPG-M-017	Design Parameters & Test Pressures for Equipment & Piping
24590-WTP-GPG-M-021	Thermal Insulation
24590-WTP-GPG-M-022	Liquid and Vapor Line Sizing By Formula
24590-WTP-GPG-M-023	Other Losses in Piping Systems
24590-WTP-GPG-M-027	Recommended Slopes for Piping Systems
24590-WTP-GPG-M-028	Vent, Drain, and Root Valve Sizing and Selection for Piping Systems
24590-WTP-GPG-M-032	Vessel Overflow and Gravity Line Sizing
24590-WTP-GPG-M-036	Determining Quality Level and Seismic Category Classification of Sub-Components, Assemblies, Sub-Assemblies, and Parts
24590-WTP-GPG-M-047	Preparation of Corrosion Evaluations
24590-WTP-GPG-M-052	Specifying Design Cycles for Equipment and Piping
24590-WTP-GPG-M-0058	Minimum Flow Velocity for Slurry Lines
24590-WTP-GPG-M-0059	Avoiding Chemical Line Plugging - Plant Design Considerations
24590-WTP-GPG-M-0061	Vessel Structural Analysis And ASME Section VIII Evaluation
24590-WTP-GPG-P-0003	Jumper Design Guide
24590-WTP-GPG-PL-002	Plant Design Material Control Guide
24590-WTP-GPG-SRAD-001	Design Guide for ALARA
Specifications:	
24590-HLW-3PS-AE00-T0001	Engineering Specification for High Level Waste Melters
24590-HLW-3PS-AE00-T0002	Engineering Specification for Seismic Qualification of High Level Waste Melters
24590-HLW-3PS-M000-T0002	Engineering Specification for High Level Waster Melter Pour Spout
24590-WTP-3PS-E00X-T0001	Engineering Specification for Electrical Equipment Installation
24590-WTP-3PS-EEC1-T0002	Engineering Specification for HLW & LAW Pour Head CCTV Cameras
24590-WTP-3PS-EEC1-T0003	Engineering Specification For Process And Mechanical Handling CCTV Through Barrier Remote-Viewing Camera Units.
24590-WTP-3PS-EKP0-T0001	Engineering Specification For Electrical Requirements For Packaged Equipment
24590-WTP-3PS-EW00-T0001	Engineering Specification For Power, Control And Instrumentation Cable, Medium Voltage Power Cable And Fiber Optic Cable (Safety)
24590-WTP-3PS-EWY0-T0001	Engineering Specification For Electrical Jumper Fabrication (Non-Its)
24590-WTP-3PS-EY00-T0003	Engineering Specification for Heater Power Supply
24590-WTP-3PS-FB01-T0001	Engineering Specification for Structural Design Loads for Seismic Category III & IV Equipment and Tanks
24590-WTP-3PS-G000-T0006	Engineering Specification For Preserving, Packaging, And Preparing Melter And Melter Components For Shipping, Handling, And Storage
24590-WTP-3PS-G000-T0014	Engineering Specification For Supplier Design Analysis
24590-WTP-3PS-G000-T0015	Engineering Specification for Environmental Qualification of Mechanical Equipment
24590-WTP-3PS-G000-T0018	Engineering Specification For Flushing And Cleaning Requirements For The Startup Of Quality And Commercial Fluid Systems In All Facilities

Table 3-6 - WTP Design Criteria, Design Guides, and General Specifications Applicable to HMP

Document Number	Title
24590-WTP-3PS-G000-T0019	Engineering Specification For Acquisition Of Commercial Items And Services For Use In Safety Applications At WTP
24590-WTP-3PS-G000-T0045	Engineering Specification For Supplier Design Analysis With Developed Software
24590-WTP-3PS-J000-T0001	Engineering Specification for Melter Systems C&I Work Specification
24590-WTP-3PS-JD01-T0001	Engineering Specification For Plant Wide Control Systems (Integrated Control Network)
24590-WTP-3PS-JL24-T0003	Engineering Specification for Through-Barrier Primary Canister Level Detection System
24590-WTP-3PS-JP02-T0001	Engineering Specification For Radiation Tolerant Pressure Transmitter Gauge, Absolute, Or Differential Pressure Measurements
24590-WTP-3PS-JP02-T0002	Engineering Specification For Radiation Tolerant Pressure Transmitter Gauge Absolute Or Differential Pressure Measurements
24590-WTP-3PS-JP02-T0003	Engineering Specification For Transmitters For Gauge, Absolute, Differential Pressure, Level And Flow Measurement
24590-WTP-3PS-JP02-T0004	Engineering Specification For Transmitters For Gauge Absolute Differential Pressure Level And Flow Measurements
24590-WTP-3PS-JP02-T0005	Engineering Specification For Passive Safety Functions Pressure Transmitters
24590-WTP-3PS-JQ00-T0004	Engineering Specification For Management Of Supplier Software
24590-WTP-3PS-JQ00-T0005	Engineering Specification For Management Of Supplier Safety Software
24590-WTP-3PS-JQ00-T0006	Engineering Specification For Management Of Supplier Developed Safety Software For Safety Instrumented Functions
24590-WTP-3PS-JQ06-T0003	Engineering Specification for Seismic Qualification of Seismic Category I Control and Electrical System and Components
24590-WTP-3PS-JQ06-T0005	Engineering Specification for Environmental Qualification of Control and Electrical Systems and Components
24590-WTP-3PS-JQ06-T0006	Engineering Specification For Instrumentation With Passive Safety Functions
24590-WTP-3PS-JQ07-T0001	Engineering Specification For Instrumentation For Packaged Systems
24590-WTP-3PS-JQ08-T0001	Engineering Specification For Construction And Installation Of Controls And Instrumentation
24590-WTP-3PS-JR00-T0003	Engineering Specification for Liquid Effluent Gamma Monitors and Area Radiation Monitors
24590-WTP-3PS-JR00-T0010	Engineering Specification for Process At-line Gamma Monitors - ITS
24590-WTP-3PS-JV01-T0001	Engineering Specification for Control Valves
24590-WTP-3PS-JV01-T0003	Engineering Specification for Control Valves (QL)
24590-WTP-3PS-JV09-T0001	Engineering Specification for On/Off Instrument Valves – ITS
24590-WTP-3PS-JV09-T0003	Engineering Specification for Non-Safety Actuated On/Off Ball Valves
24590-WTP-3PS-JV09-T0004	Engineering Specification for Safety-Related Actuated On/Off Ball Valves
24590-WTP-3PS-JV14-T0001	Engineering Specification for Pressure Relief Valves
24590-WTP-3PS-JV14-T0002	Engineering Specification for Pressure Relief Valves and Rupture Disks
24590-WTP-3PS-JXF0-T0001	Engineering Specification for Instrument Piping Material Classes
24590-WTP-3PS-JXF0-T0002	Engineering Specification for Instrument Piping Material Classes – Q
24590-WTP-3PS-JXF0-T0003	Engineering Specification For Instrument Tubing Supports - QL
24590-WTP-3PS-JXH0-T0001	Engineering Specification For Instrumentation Flexible Metal Hoses
24590-WTP-3PS-LVE-T0001	Engineering Specification for Electrical and Instrumentation Jumper Cables
24590-WTP-3PS-LVE-T0003	Engineering Specification for Electrical and Instrumentation Jumper Connectors
24590-WTP-3PS-LVE-T0006	Engineering Specification for Electrical and Instrumentation Jumper Connectors
24590-WTP-3PS-M000-T0014	Engineering Specification For Labeling Of Permanent Plant Components
24590-WTP-3PS-MEEM-T0001	Engineering Specification for Melter Start-up Frit
24590-WTP-3PS-MQR0-T0005	Engineering Specification for HLW Facility Melter Rails
24590-WTP-3PS-MV00-T0001	Engineering Specification for Pressure Vessel Design and Fabrication
24590-WTP-3PS-MV00-T0002	Engineering Specification for Seismic Qualification Criteria for Pressure Vessels
24590-WTP-3PS-MV00-T0003	Engineering Specification for Pressure Vessel Fatigue Analysis

Table 3-6 - WTP Design Criteria, Design Guides, and General Specifications Applicable to HMP

Document Number	Title
24590-WTP-3PS-MVB2-T0001	Engineering Specification for Welding of Pressure Vessels, Heat Exchangers and Boilers
24590-WTP-3PS-NR00-T0001	Engineering Specification for HLW and LAW Melter Fused Cast Refractory
24590-WTP-3PS-NWP0-T0001	Engineering Specification for General Welding and NDE Requirements for Supplier Fabricated Piping
24590-WTP-3PS-P000-T0001	Engineering Specification For Piping Material Classes General Description And Summary
24590-WTP-3PS-PB01-T0001	Engineering Specification For Technical Supply Conditions For Pipe, Fittings, And Flanges
24590-WTP-3PS-PF00-T0005	Engineering Specification for Flexible Pneumatic/Process Jumper Fabrication (Non-ITS)
24590-WTP-3PS-PH01-T0001	Engineering Specification For Technical Supply Conditions 'QL' Pipe Supports
24590-WTP-3PS-PH01-T0002	Engineering Specification For Installation Of Pipe Supports
24590-WTP-3PS-PS02-T0001	Engineering Specification For Shop Fabrication Of Piping
24590-WTP-3PS-PS02-T0003	Engineering Specification For Field Fabrication And Installation Of Piping
24590-WTP-3PS-SS00-T0001	Engineering Specification For Welding of Structural Carbon Steel
24590-WTP-3PS-SS00-T0002	Engineering Specification For Welding of Structural Stainless Steel and Welding of Structural Carbon Steel to Structural Stainless Steel.
24590-WTP-3PS-SS90-T0001	Engineering Specification for Seismic Qualification of Seismic Category I/II Equipment and Tanks
24590-WTP-3PS-SS90-T0002	Engineering Specification for WTP Project Tailoring of ANSI/AISC N690 & IEEE 323, 344, & 382

4 System Description

This section summarizes design output information, describing the current design and the operational and maintenance aspects of the system. The information provided below does not contain design requirements and should not be used as design input. The description of the current design contained in this section may not fully align with design requirements. This is acceptable within the context of this document. Areas of misalignment are to be resolved through appropriate mechanisms and the SDD updated to reflect changes made to the design. Changes to the descriptive text will be made following the changes to the lower tiered Engineering documents.

All operating parameters used in this section are nominal unless otherwise indicated.

4.1 Configuration Information

The HMP system consists of two identical joule-heated melters. Each melter is connected to a dedicated feed vessel and offgas system. A simplified diagram of the melter system is depicted in Figure 4-1.

The HMP system receives blended melter feed from the HLW Melter Feed Process (HFP) System melter feed vessel. The HLW melter is fed via two air displacement slurry (ADS) pumps, each supplying a separate feed nozzle on the melter. The feed slurry falls from the nozzles, located in the melter lid, onto the cold cap surface in the melter. The offgas generated by the two HLW melters is cooled and treated by the HLW Melter Offgas Treatment Process (HOP) System. The HLW Canister Pour Handling (HPH) System transfers a canister to and from a pour spout beneath a melter cave where they are filled with HLW glass from the melter above.

Figure 4-1 – HLW Melter System Simplified Diagram

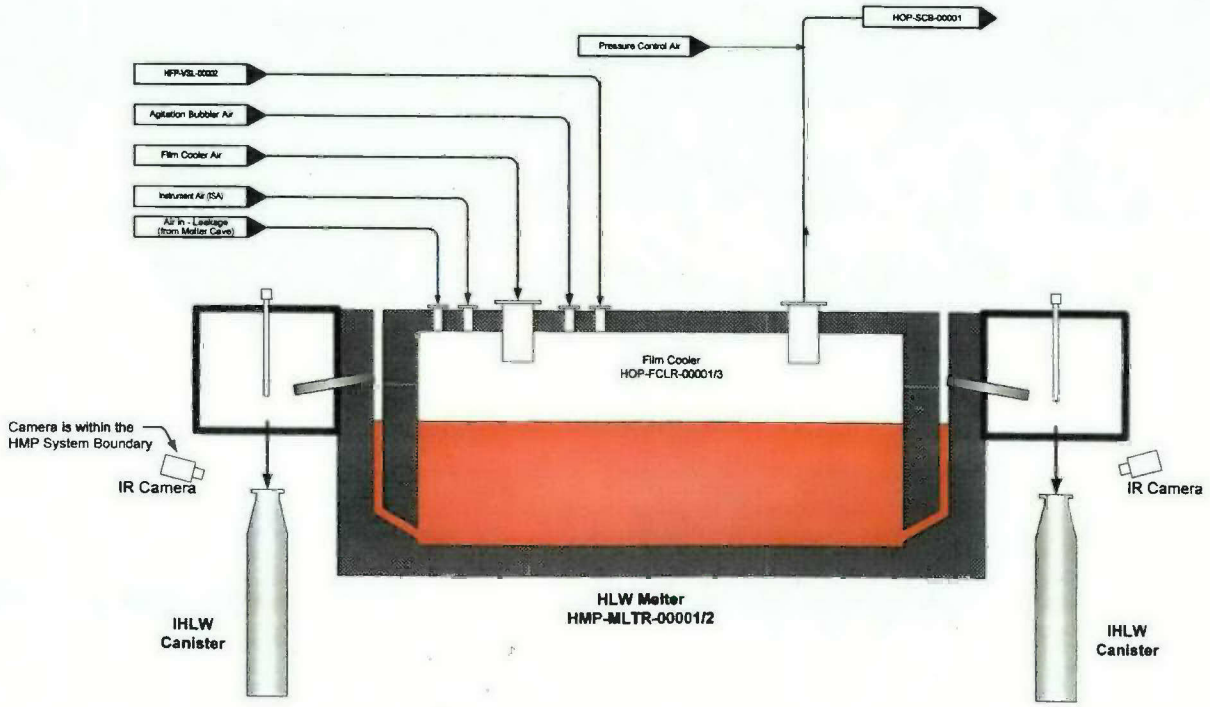

4.1.1 Description of System, Subsystems, and Major Components

4.1.1.1 HLW Melters

- *Plant Item Number: 24590-HLW-ME-HMP-MLTR-00001(East)*
- *Plant Item Number: 24590-HLW-ME-HMP-MLTR-00002(West)*
- Refer to: 24590-HLW-3PS-AE00-T0001, *Engineering Specification for High Level Waste Melters.*
- Refer to: 24590-HLW-M0D-HMP-00001, *24590-HLW-ME-HMP-MLTR-00001 – High Level Waste Melter 1 Datasheet*
- Refer to: 24590-HLW-M0D-HMP-00002, *24590-HLW-ME-HMP-MLTR-00002 – High Level Waste Melter 2 Datasheet*

The high-level waste (HLW) melter system is designed to convert the mixture of the pretreated HLW waste and glass-forming chemicals into glass. The overall size of the HLW melter is roughly 172 inches long, by 164 inches wide, by 146 inches high with an interior glass tank dimension (glass pool area) of approximately 96 inches long by 60 inches wide and 44 inches deep. The estimated assembled weight of the HLW melter is 87 short tons (99 short tons with glass). A cutaway of the HLW melter is shown in Figure 4-2. This view is along the same plane as the electrodes; hence, they are not visible.

Figure 4-2 – HLW Melter Sectional View along North-South Axis at Discharge Riser

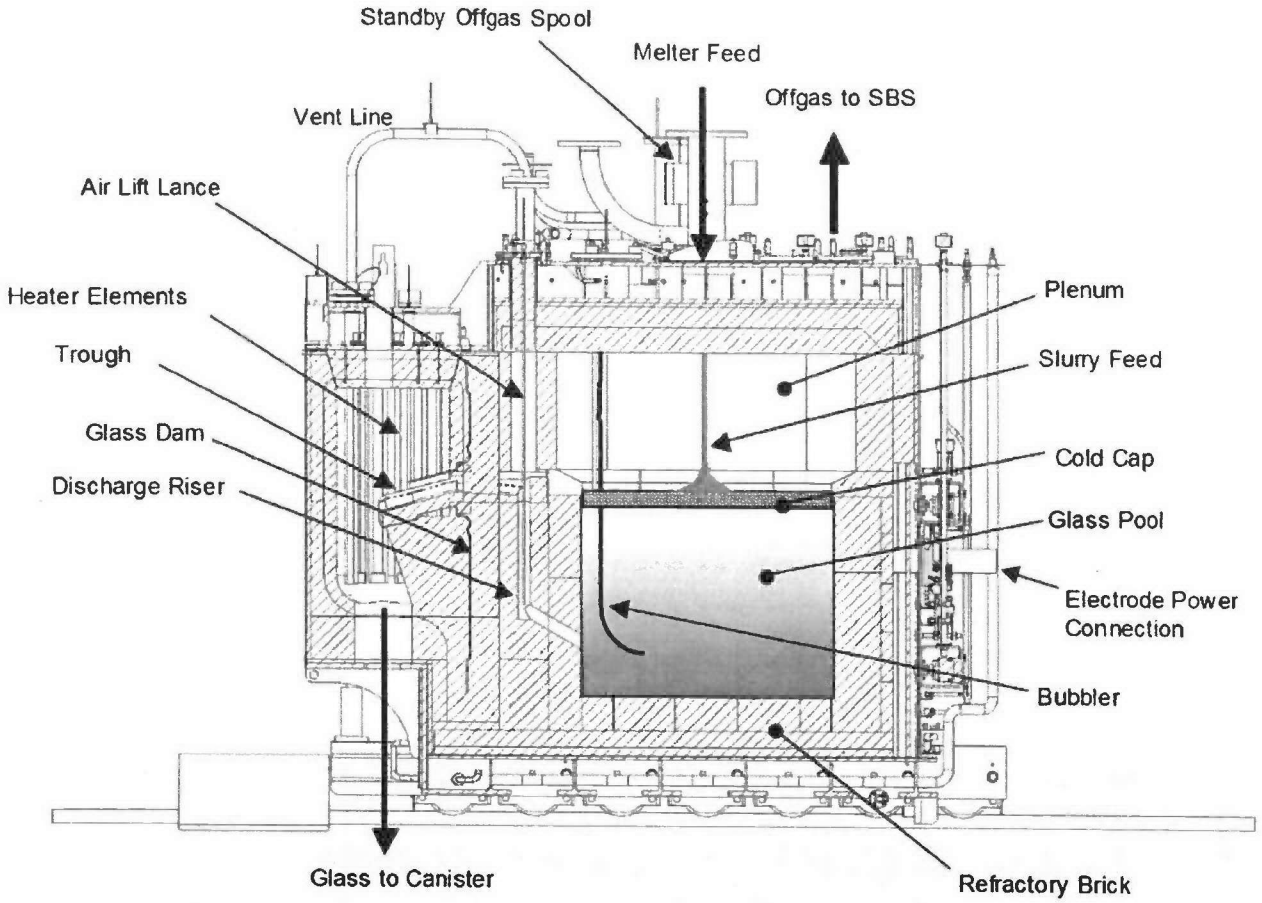

Note: Electrodes are mounted in the East and West walls of glass pool refractory box.

The melter has four internal compartments; the glass tank, two discharge chambers, and the melter plenum. The glass tank is a five-sided open top box that is lined with refractory material designed to withstand corrosion from molten glass, [3.4.1.7 - Materials of Construction and Erosion/Corrosion Design Parameters]. The plenum is lined with refractory material to withstand hot corrosive gases, thermal shock, and glass and feed splatter. All components submerged into the glass (such as level detector, thermowells, etc.) are installed through the plenum through penetrations in the melter lid. The discharge chambers are insulated heated chambers attached to the south side of the melter. They house troughs for directing molten glass delivered from the glass pool into the HLW canisters. Surrounding these internal compartments are the cooling, support, and confinement structures required to operate the melter.

The melter is supported by a base structure with transport wheels mounted along the lower east and west sides of the base assembly. This system provides a method to insert and remove the HLW melter into or out of the cave along rails on which the melter sits. The base provides the attachment points for the melter seismic restraints (at the southeast and southwest corners, and at the sides of the north portion of the melter base), the melter transport connections, and the cooling for the bottom refractory, [3.4.1.8 - Seismic Design for SSCs]. An isometric of the HLW Melter is in Figure 4-3.

Figure 4-3 – Isometric View of HLW Melter

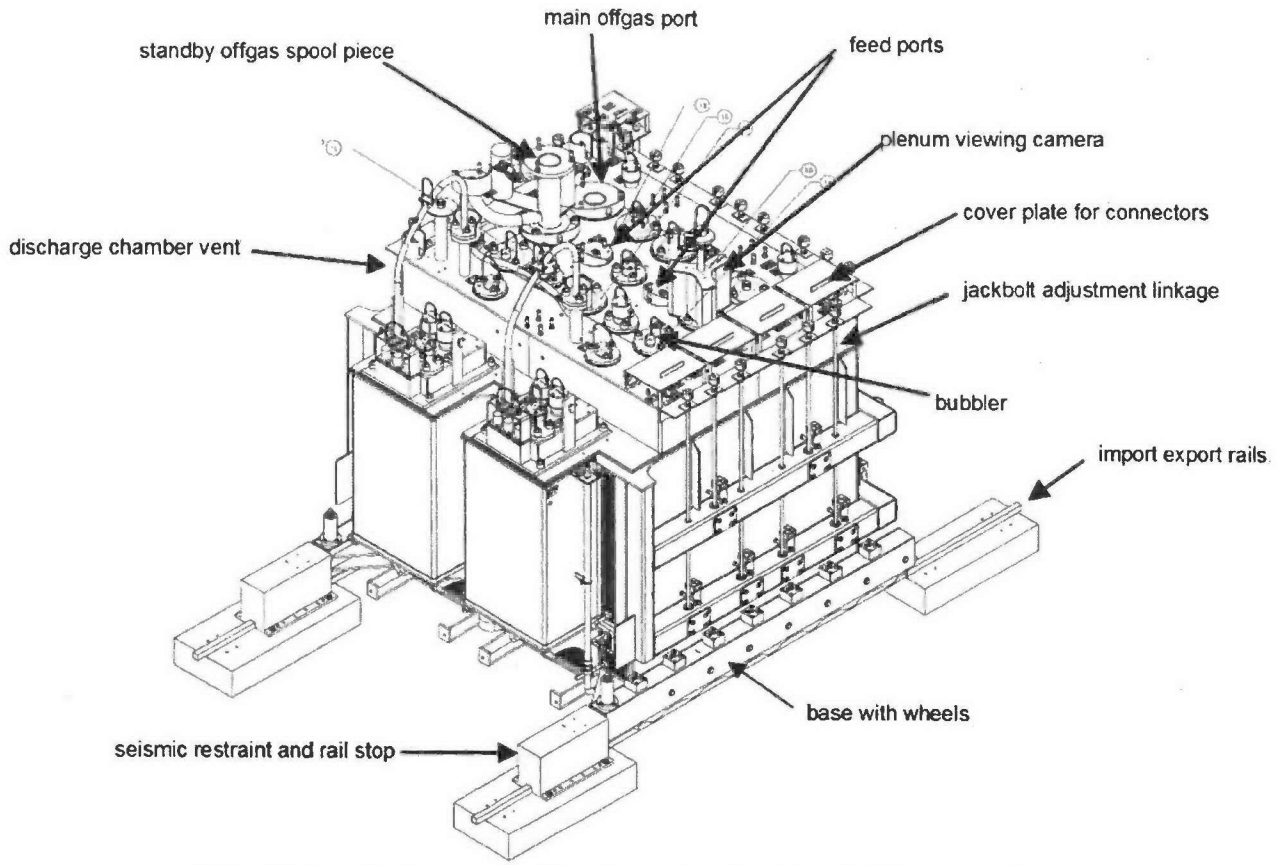

Note: Plenum viewing camera will not be purchased and installed for commissioning.

Pre-made glass, or frit, is used for melter startup. Temporary radiant heaters mounted inside the plenum will provide the heat for startup, [3.4.4.5 - Startup Testing and Commissioning]. When the melter reaches its operating temperature, frit is added to begin establishing a molten glass pool. Once the glass depth is sufficient to form a conducting path between the electrodes, joule heating is initiated. Frit will continue to be fed until the melting cavity is filled sufficiently to sustain operation. At this time, the start-up heaters are removed. Additional frit will then be added to raise the molten glass pool to its normal operating level, followed by the immediate installation of the remaining normal melter operating lid components.

The feed slurry enters through two feed pumps, each supplying a separate feed nozzle on the melter. Feed from the two separate air-displacement-slurry (ADS) pumps will alternate to minimize the potential for steam surging and plenum vacuum fluctuations. Depending on slurry concentration, for a glass production rate of 3 metric tons of glass per day (MTG/d), the nominal feed rate is approximately between 24 and 108 gal/h.

The feed slurry will fall from the feed nozzles, which are located in the melter lid, onto the molten glass surface within the melter. The feed material will form a distinct layer, often referred to as the "cold cap," on the surface of the glass pool. Within this layer, several physical and chemical processes occur simultaneously as the feed material is heated from ambient to the melter glass pool temperature. First, the water in the feed will evaporate leaving a layer of dried waste and glass-forming chemicals. As the temperature of the dried material increases due to heat transfer from the glass pool, gases will evolve from the decomposition of salts, dehydration of compounds, and decomposition of organic compounds. Finally, in the lowest layers of the cold cap, the calcined feed material dissolves as it enters the glass pool. At vent locations where bubblers break open the cold cap, these

processes may not occur in distinct layers (as in a plug flow reactor) due to the turbulence and agitation in this zone.

Joule heating will provide the energy to overcome thermal losses, evaporate water, and melt feed materials by passing alternating current directly through the molten waste glass. The HLW melters will require a melter power supply of approximately 800 kW to support future operation of the HLW Facility at a design capacity of up to 7.5 MTG/day (24590-WTP-DB-ENG-01-001).

Thermal instabilities are avoided by the use of large plate electrodes that minimize electrode current densities. Two side electrodes are used. These electrodes have extensions that connect to electrical buses on the melter exterior. The electrodes are cooled to ensure continued operation even with high current densities near the end of melter life due to the presumed accumulation of noble metals. The electrode extensions are cooled to prevent glass migration through the refractory and to the melter exterior.

Power to the electrodes is regulated by maintaining a temperature set-point in the glass pool. The glass pool temperature is measured by six thermocouples located in thermowells that are immersed in the glass and averaged together to determine the glass pool temperature. At least three of the six thermocouples need to be active to result an average output temperature of the glass pool. The voltage supplied to the melter electrodes is varied to control the flow of current and thus heat generated within the glass. Power control is necessary because the electrical resistance of the glass pool varies with composition, temperature, glass depth, and other factors.

The range of physical properties of the HLW molten glass defined in the HLW melter specification 24590-HLW-3PS-AE00-T0001 is:

- Liquidus temperature, 1100 to 1200°C
- Viscosity, 10 to 150 poise at 1100°C
- Electrical conductivity, 0.1 to 0.7 Siemens per cm at 1100 to 1200°C

The melter plenum is maintained at a nearly constant pressure (partial vacuum) to confine the gases released during slurry feeding. The glass temperature is maintained within a band of 1100 to 1200°C with a set point of 1150°C, [3.5.1.1.2 - Operating Temperature]. The temperature is measured using thermocouples placed in thermowells submerged in the pool at various locations, [3.9.1.1 - Glass Pool Temperature Monitoring]. From these individual temperatures, an average glass pool temperature is determined and used to control electrode power. Note, at least three of the temperature elements/indicators need to be operational to obtain an accurate average. The voltage applied to the electrodes is regulated in order to control the amount of power supplied to the glass pool and therefore, maintain glass temperature at the desired value. During slurry feeding, the melter plenum temperature is controlled within the range of 300 to 600°C by adjusting the rate at which feed is added to the melter. The DM1200 pilot melter was typically operated at a plenum temperature of between 450 to 550°C.

Each melter contains two heated discharge chambers mounted on the south wall. The glass is discharged by an airlift system. The glass will flow down an alloy trough and gravity drain through the discharge chamber into metal canisters for cooling, solidification, and storage. An alloy dam is attached to the trough and provides a physical barrier ensuring no glass leakage occurs between discharge chamber and the glass pool / risers.

The canisters that are used to cast the molten glass are 2 feet in diameter and approximately 15 feet tall. To ensure canister filling, pour rate is approximately 500 kg/h, which is 3.2 times the average glass production rate (3.75 MTG per day = 156.25 kg/h). Therefore, the glass discharge is controlled in a batch mode, while feeding is a continuous operation. The determination of when to start and stop a melter glass discharge is made using the melt-pool level detector, to ensure that the level of glass pool in the melter is maintained between the high and low operating levels.

The HLW melter process and associated piping and instrumentation are described on process flow diagrams (PFDs) and the piping and instrumentation diagrams (P&IDs) (see "Applicable Documents" Section 5) Detailed interfaces and the associated mechanical, electrical, and instrument connections are described in the appendices A

and B of the HLW melter specification (24590-HLW-3PS-AE00-T0001) and in various melter design drawings. This information is summarized in the simplified P&ID of Figure 4-4. A plan view showing the locations of melter connections is in Figure 4-5. Table 4-1, Table 4-2, and Table 4-3 identify and describe the melter connections and ports appearing in Figure 4-4 and Figure 4-5.

Table 4-1 – Melter Ports

PORT NUMBER	DESCRIPTION	PORT NUMBER	DESCRIPTION
P01	Feed Slurry / Startup Frit	P36	Camera – Spare / Bubbler
P02	Feed Slurry / Startup Frit	P40	West Discharge Chamber Inspection Port
P03	Main Offgas Film Cooler	P41	West Discharge Chamber Thermowell
P04	Standby Offgas	P42	West Discharge Chamber Thermowell
P05	Bubbler	P43	East Discharge Chamber Inspection Port
P06	Bubbler	P44	East Discharge Chamber Thermowell
P07	Bubbler	P45	East Discharge Chamber Thermowell
P08	Bubbler	P46A	West Discharge Chamber Vent
P09	Bubbler	P46B	West Discharge Chamber Vent Plug
P10	Vacuum Probe	P47A	East Discharge Chamber Vent
P11	Spare/bubbler	P47B	East Discharge Chamber Vent Plug
P12	East Airlift Riser	P48	East Glass Pool & Plenum Thermocouple / Thermowell
P13	West Airlift Riser	P49	West Glass Pool & Plenum Thermocouple / Thermowell
P34	Level Detector		

Table 4-2 – Electrical Power and Electrical Signal Connections

CONNECTOR NUMBER	DESCRIPTION	CONNECTOR NUMBER	DESCRIPTION
N50	Bus Attachment, West Electrode	N62	West Discharge Heater Elements 1-3
N50A	West Electrode Thermocouple	N63	West Discharge Heater Elements 4-5
N52	Bus Attachment, East Electrode	N64	West Discharge Heater Elements 6-8
N52A	East Electrode Thermocouple	N65	West Discharge Heater Elements
N58	East Discharge Heater Elements 1-3	N76	Plenum CCTV
N59	East Discharge Heater Elements 4-5	N77	East Aux. Discharge Heater (rarely used)
N60	East Discharge Heater Elements 6-8	N78	West Aux. Discharge Heater (rarely used)
N61	East Discharge Heater Elements		

Table 4-3 – Melter Nozzles, Fluid Services and Associated Ports

NOZZLE NUMBER	DESCRIPTION	PORT CONNECTED TO NOZZLE	REQUIRED SERVICE FLOWS
N01B	DIW: cool-down prior to slurry feeding. ISA: cool-down prior to startup frit addition	P01	DIW: intermittent 0.2 to 1 gpm ISA: intermittent 20 to 40 scfm.
N02B	DIW: cool-down prior to slurry feeding. ISA: cool-down prior to startup frit addition	P02	DIW: intermittent 0.2 to 1 gpm ISA: intermittent 20 to 40 scfm.
N03A	ISA: Film Cooler Air DIW: water for film cooler	P03	ISA: 0 to 309 scfm water: intermittent 1 gpm
N03B	Spare for Future Standby Film Cooler Air Supply	P04	N/A
N05	ISA for bubbler	P05	1 to 3 scfm
N06	ISA for bubbler	P06	1 to 3 scfm
N07	ISA for bubbler	P07	1 to 3 scfm
N08	ISA for bubbler	P08	1 to 3 scfm
N09	ISA for bubbler	P09	1 to 3 scfm
N10	Spare	P10	N/A
N10A	Plenum Pressure Tap with ISA Purge	P10	0.2 scfh
N11	Spare	P11	N/A
N12	ISA for East Airlift, argon for continuous purge	P12	ISA: intermittently 1 to 3 scfm argon: ≥ 0.2 scfh
N13	ISA for West Airlift, argon for continuous purge	P13	ISA: intermittently 1 to 3 scfm argon: ≥ 0.2 scfh
N16	Base PCW Supply	N/A	10 gpm
N17	West PCW Supply	N/A	10 gpm
N17A	Extension Jumper	N/A	N/A
N18	South PCW Supply	N/A	5 gpm
N19	North PCW Supply	N/A	10 gpm
N20	East PCW Return	N/A	10 gpm
N21	Base PCW Return	N/A	10 gpm
N22	West PCW Return	N/A	10 gpm
N23	South PCW Return	N/A	5 gpm
N23A	Extension Jumper	N/A	N/A
N24	North PCW Return	N/A	10 gpm
N25	East PCW Supply	N/A	10 gpm

NOZZLE NUMBER	DESCRIPTION	PORT CONNECTED TO NOZZLE	REQUIRED SERVICE FLOWS
N26	ISA for East Electrode Cooling	N/A	100 scfm
N28	ISA for West Electrode Cooling	N/A	100 scfm
N29	ISA for East Extension Cooling	N/A	20 scfm
N31	ISA for West Extension Cooling	N/A	20 scfm
N32	Melter Shell Drain (only if leak occurs)	N/A	N/A
N33	Shell Leak Detector and Backup Plenum Pressure with ISA Purge	N/A	0.2 scfh
N34A	Level Detector Air	P34	1 scfh
N34B	Level Detector Air	P34	1 scfh
N36	ISA for bubbler	P36	1 to 3 scfm
N38	East Refractory Thermowell	N/A	N/A
N39	West Refractory Thermowell	N/A	N/A
N46	West Discharge Chamber Vent	N/A	17 scfm
N47	East Discharge Chamber Vent	N/A	17 scfm
N48A	West Glass Pool & Plenum Thermocouple / Thermowell	P48	N/A
N48B	East Glass Pool & Plenum Thermocouple / Thermowell	P48	N/A
N49A	West Glass Pool & Plenum Thermocouple / Thermowell	P49	N/A
N49B	East Glass Pool & Plenum Thermocouple / Thermowell	P49	N/A
N53	Film Cooler Main Offgas Port	N/A	N/A
N54	Standby Offgas Port	N/A	N/A
N55	ISA for Maintenance Bypass	N54	30 to 160 scfm
N56	Plenum Pressure Tap with ISA Purge (Vacuum)	N/A	0.2 scfh
N57	Spare Plenum Pressure Tap	N/A	N/A

Figure 4-4 – Simplified HLW Melter P&ID

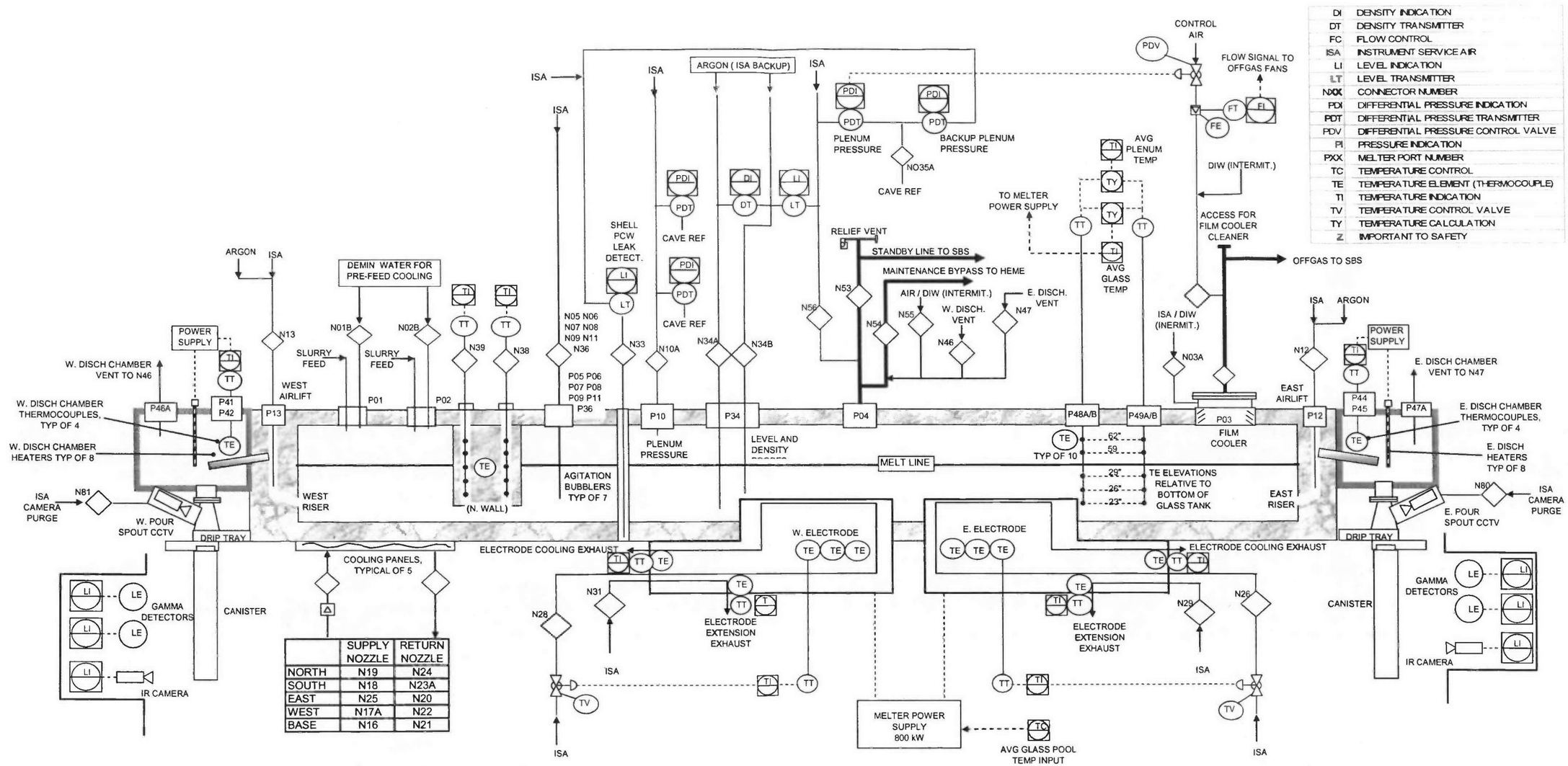

Note: For reference purposes only, refer to actual P&IDs for detail

Figure 4-5 – Plan View of HLW Melter Showing Nozzles and Lid Ports

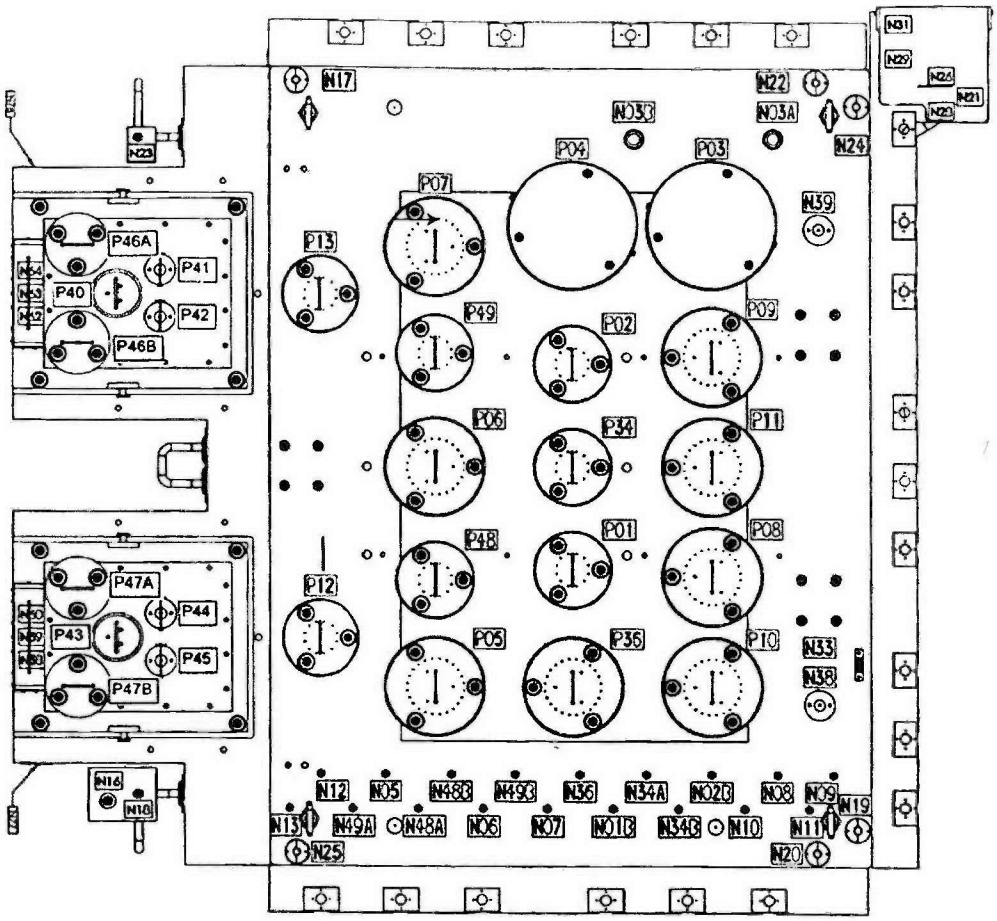

4.1.1.2 Melter Components

The components of the HLW Melter(s) are described in detail the subsystems of the HLW melter system mechanical design. The HLW melter subsystems are:

- Containment System
- Joule-Heating
- Feed
- Glass Discharge
- Agitation

4.1.1.2.1 Containment System

The melter must be designed to contain molten glass and radioactive and hazardous materials to minimize corrosive attack to the melter cave and to other external melter components. Melter confinement is comprised of the following structures, systems, and components (SSCs) which are covered in ensuing sections: wall modules (melter shell), melter refractory, glass dam, cooling panels, expansion control, base with integral transportation,

seismic restraint, lid, and offgas, [3.4.4.3 - C3 Located Instrumentation, 3.5.2.1.1 - Confinement of Offgas, 3.8.4.1- Flushing, Draining, and Slopes, 3.4.1.7 - Materials of Construction and Erosion/Corrosion Design Parameters, 3.9.1.7.1 - Redundant Melter Plenum Pressure].

4.1.1.2.1.1 Melter Wall Modules

The melter wall modules, shown in Figure 4-6, form a shell around the melter that provides a ventilation boundary and carries pressure loads to the structural support. The shell also supports the lid and the discharge chambers. The shell structure is formed from a 1/4-inch corrosion-resistant alloy that resists exposure to salt fumes. The shell system also includes a south wall top cover over the discharge chambers extending under the south edge of the lid. The shell is externally stiffened by horizontal box section tubular beams that are stitch-welded to the C-276 shell at the levels of the upper and lower jackbolt rows on the east, west, and north walls. The jackbolts are attached to brackets mounted in the box section beams. In addition to supporting the jackbolt loads, the wall modules are designed to withstand loads of 100 inches H_2O melter plenum vacuum (inward pressure of 530 lb/ft^2) and 10 inches H_2O pressurization (outward pressure of 53 lb/ft^2).

The melter shell provides confinement during and after a seismic event. The shell also works in conjunction with the Melter Offgas Treatment Process System (HOP) to confine volatile materials and particulates. The shell structural support works in conjunction with the shell to maintain integrity of the melter during and after seismic and pressure or vacuum transients. The lid provides confinement of volatile materials and particulates, and provides attachment points for the offgas system, which is the motive source for the melter ventilation system. Several other melter services, including feed nozzles, startup heaters, bubblers, thermowells, glass level detector, and discharge riser air lances, enter the melter through ports in the lid.

Figure 4-6 – Melter Wall Module

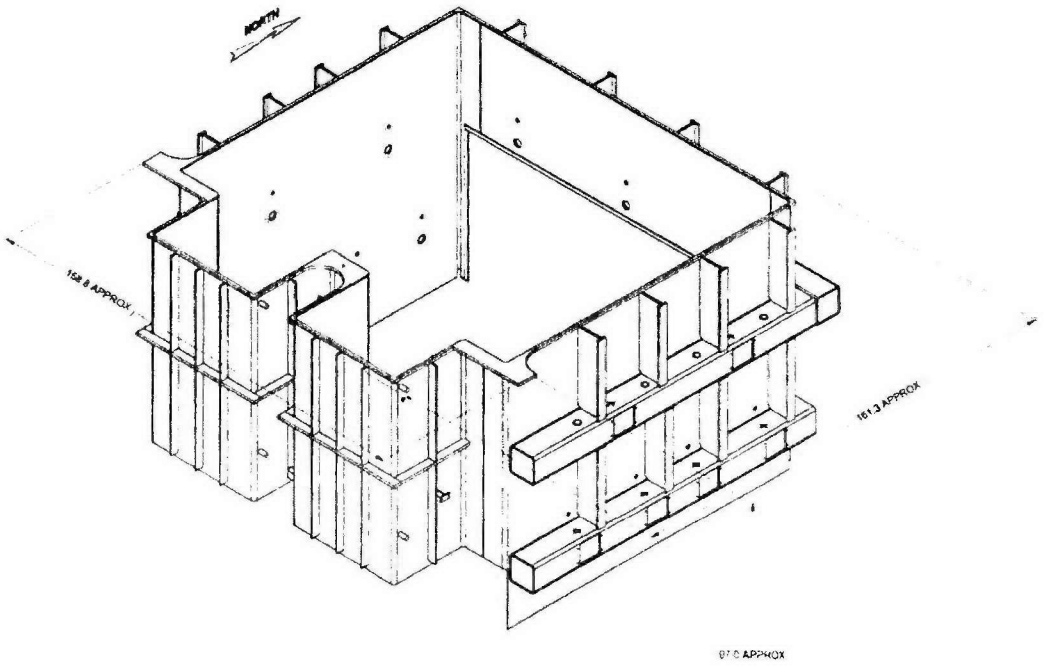

4.1.1.2.1.2 Melter Refractory

The refractory can be thought of as having two separate sections: one section is for contact with the molten glass pool (glass pool refractory) and the other section is in contact with the gas space above the glass pool (plenum refractory). A cutaway of the melter along the north-south axis is shown in Figure 4-2.

4.1.1.2.1.3 Glass Pool Refractory

The refractory that confines the molten glass is called the glass tank. It consists of all the refractory surrounding the glass pool, shown in Figure 4-7, including the four walls of the melter and the melter floor. The glass tank extends to a height of 5 inches above the nominal glass level. The primary design concerns are corrosion of the brick by the molten glass, electrical isolation of the glass pool from the melter shell, and prevention of glass migration and leakage. The glass tank interior dimensions are approximately 8 ft long by 5 ft wide and 4 ft deep. The primary design considerations for the plenum refractory are resistance to corrosive gases (halides, sulfur), resistance to high temperature (up to 1150°C), thermal shock resistance, thermal insulation and resistance to slag (molten oxides). The glass contact and plenum space sidewall refractory bricks are formed by a fused cast process and are supplied by Monofrax. The types used are Monofrax K-3, Monofrax E, and Monofrax H, which are hereafter referred to by their letter designations. H is 93 wt% alumina. K-3 is 30 weight percent (wt%) chrome oxide with 60 wt% alumina, and E is 80 wt% chrome oxide with the balance being mainly alumina. Placed immediately outboard of the glass tank refractory is a layer of alumina-zirconia-silica (AZS) brick made from a conventional sintering process.

Three types of castable refractory are used in the melter: 1) dense alumina-silica, Versaflow 57A, 2) dense alumina, Alfrax-66, and 3) insulating, Kaolite 2500LI. The plenum roof is lined with the dense alumina-silica castable refractory. On the east and west sides of the glass pool are electrodes made from INCONEL® 690 alloy, hereafter called alloy 690.

The glass contact refractory is a 12-inch layer of K-3 refractory. This type of brick has a relatively high thermal conductivity. Higher chrome oxide content E refractory is used for the discharge riser blocks in the south wall. The height of glass contact on the refractory sidewall, above the nominal melt line level, is about 5 inches in order to reduce thermal shock effects above the refractory melt line when the melter is transitioned from feeding to idle mode and back. Cooling of the refractory boosts the corrosion resistance while increasing the viscosity of the glass to the point that it stops flowing. A *freeze-plane* for the glass is designed to be located in the K-3 refractory so that the AZS should never be exposed to molten glass. At the reduced temperatures in the outer faces of the glass contact refractory, the corrosion rate is negligible as long as the joints are small enough to prevent convective flow of glass.

The sidewall glass contact refractory is backed up with alumina-zirconia-silica (AZS) refractory that is corrosion resistant, but has somewhat higher thermal insulation properties than the glass contact refractory. Two 3-inch thick layers (6 inches total) of AZS refractory back the K-3 on the east and west end walls and the north wall. A single 3-inch thick layer of AZS refractory backs the K-3 on the south wall. The discharge riser blocks extend outward through the AZS layer at the east and west discharge riser locations.

On the east and west end walls, and the north wall, the AZS refractory is backed by water cooling panels with an electrical isolation barrier at the interface between the refractory and the cooling panels. The electrical isolation barrier consists of a thin sheet of mica attached with epoxy to the inside surfaces of the cooling panels. The total thickness of this finished layer is estimated to be 0.05 in. This layer reduces any flow of electrical currents from the glass pool to the cooling panels and the melter metallic shell.

In the discharge (south) wall, a layer of AZS brick also backs the glass pool K-3 to both sides of the E discharge riser blocks, which extend towards the discharge chambers. Dense alumina castable refractory and insulating castable refractory are used outside the AZS layer and the riser blocks, with the insulating castable being used in regions where a more insulating material is needed to tailor the temperature profiles in the discharge wall. The

dense alumina castable is placed around the alloy 690 glass dams and extends into the discharge chambers up to the level of the discharge troughs. The dams extend sufficiently far from the discharge troughs (which pass through the dams) that the temperature gradient to the edges of the dams is sufficient to prevent glass leakage around the dams.

The glass contact refractory on the melter floor is an 8-inch layer of K-3. Behind this is a 4-inch layer of castable alumina. A 2-inch layer of insulating castable is used between the castable alumina and the melter base assembly.

Figure 4-7 – Melter Glass Pool Refractory

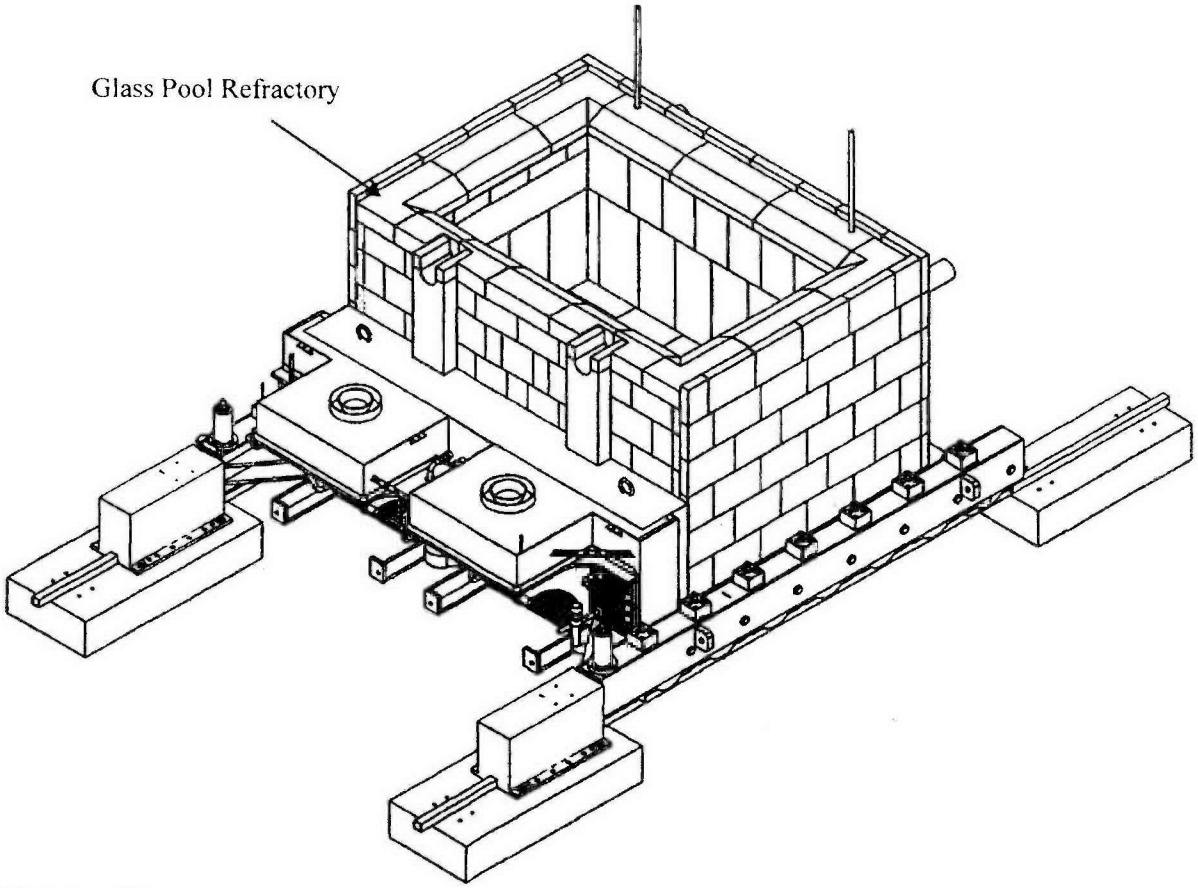

4.1.1.2.1.4 Plenum Refractory

The headspace above the glass pool is the melter plenum. The plenum refractory interior dimensions are approximately 9 ft long by 6 ft wide by 3 ft high. A 6-inch high "capstone" layer tops the glass contact refractory package is shown in Figure 4-8.

The capstone is H refractory brick. The internal walls step out 6 inches at the top of the capstone to the plenum walls. From the plenum interior walls, the capstone is sloped towards the glass pool so that feed or glass splattered onto the plenum wall will drain back to the glass pool. The outer layer of AZS refractory and the cooling panels extend up from the glass contact refractory package to approximately 2 inches above the top of the capstone.

The internal plenum wall refractory is a 9-inch layer of H-blocks that extend from the capstone up to the melter lid. This refractory provides adequate corrosion resistance with significantly higher shock resistance than the other refractories, which is necessary due to the temperature changes between idling and feeding the melter and

due to splashing feed. The plenum area is insulated to reduce heat loss. The plenum wall H-blocks are backed by a 5-1/4 inch thick layer of insulating castable. There is a 1-inch thick layer of insulating ceramic board between the insulating castable and the outer melter shell.

The melter lid is insulated, starting at the lid metal mid-plate toward the plenum, with a 1-inch layer of ceramic board, followed by a 5-inch layer of insulating castable, and finally by a 6-inch layer of alumina-silica dense castable. Castable has been used successfully in the lids of numerous liquid-fed melters. Because it can be poured around formwork, much like concrete, it is well suited for fabrication of the lid with its many penetrations. The insulating layer in the lid reduces heat loss and protects the refractory hangers from high temperature oxidation.

Figure 4-8 – Melter Plenum Refractory

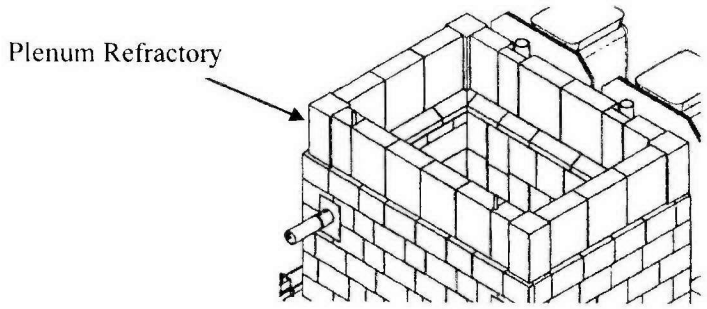

4.1.1.2.1.5 Cooling Panels

Cooling panels, shown in Figure 4-9, surround the glass contact refractory package (except at discharge chambers) cool the external refractory surfaces limiting the depth to which glass can penetrate outward through refractory joints before freezing. Glass melt increases in viscosity to approximately 10,000 poise as it cools to approximately 700°C, becoming too viscous to flow or further penetrate outward through the refractory package. The cooling will establish an isotherm of approximately 700°C within the K-3 contact layer of refractory, limiting glass penetration so that it does not penetrate out to the AZS backing refractory layers. Cooling of the glass contact refractory package will also reduce the rate of corrosion of the interior refractory by the glass melt, [3.4.1.7 - Materials of Construction and Erosion/Corrosion Design Parameters, 3.4.2.3 - Isolation from Radioactive Material, 3.8.4.2 - Isolation and Test Points].

There are five cooling panel circuits in parallel with a common return header. The cooling panels on the north, east, and west walls also serve as the pressure plates that transfer force from the jackbolts to the glass pool refractory package compressing the joints between the refractory blocks. These cooling panels are inside the melter shell and extend from the melter base to the top of the outer AZS refractory layer, which extends approximately 2 inches above the top of the capstone. Three separate cooling water circuits supply the north, east, and west wall cooling panels. The east and west walls have two cooling panels connected together in series. The north wall has three cooling panels connected in series.

Cooling panel circuits on the south wall below, between, and beside the discharge chambers are connected in series to form a single cooling circuit and are mounted on the outer surface of the metal melter shell. The melter base is cooled by water panels mounted to the underside of the melter base plate between each of the inverted T-beams supporting the base.

A cooling water leak detector tube extends from the lid to near the bottom of the annular space between the cooling panel (east end north wall) and the melter shell. Monitoring the backpressure of a small airflow (0.2 SCFM) through this tube provides an indication of cooling water leakage and the depth of any water in the space between the cooling panels and melter shell. The cooling water leak detector can also be used as a back-up melter vacuum reference probe because it is inside the wall modules, which are gas barriers. A low point drain

located on the lower north wall module is provided to remove any water that may accumulate if a panel leaks. The drainpipe mounted along the outside of the melter lower north wall discharges to a drain on the west side of the melter, [3.5.4.1 - Melter Shell Drain, 3.5.2.1.1 - Confinement of Offgas].

To prevent condensation from forming on the cooling panels, which are within the melter shell and exposed to volatilized corrosive salts, the dew point in the cave is expected to be maintained less than 80°F (approximate average temperature of the water supply). This can be accomplished by the controlled humidity in the C2V system that cascades into the melter cave.

The cooling panels all share a common return line, which is protected with redundant relief valves (hydraulic expansion/vaporization protection). The relief valves are located out-cave and have provisions for isolation, drain, or bleed capabilities as needed for maintenance and/or testing, [3.8.4.2 - Isolation and Test Points, 3.4.2.2 - Personnel Access to Equipment and Instrumentation – ALARA Exposure, 3.4.4.2 - Equipment Accessibility – Support of Maintenance and Operations, 3.4.4.3 - C3 Located Instrumentation].

Figure 4-9 – Elevation View of HLW Melter Showing Cooling Panels and Piping

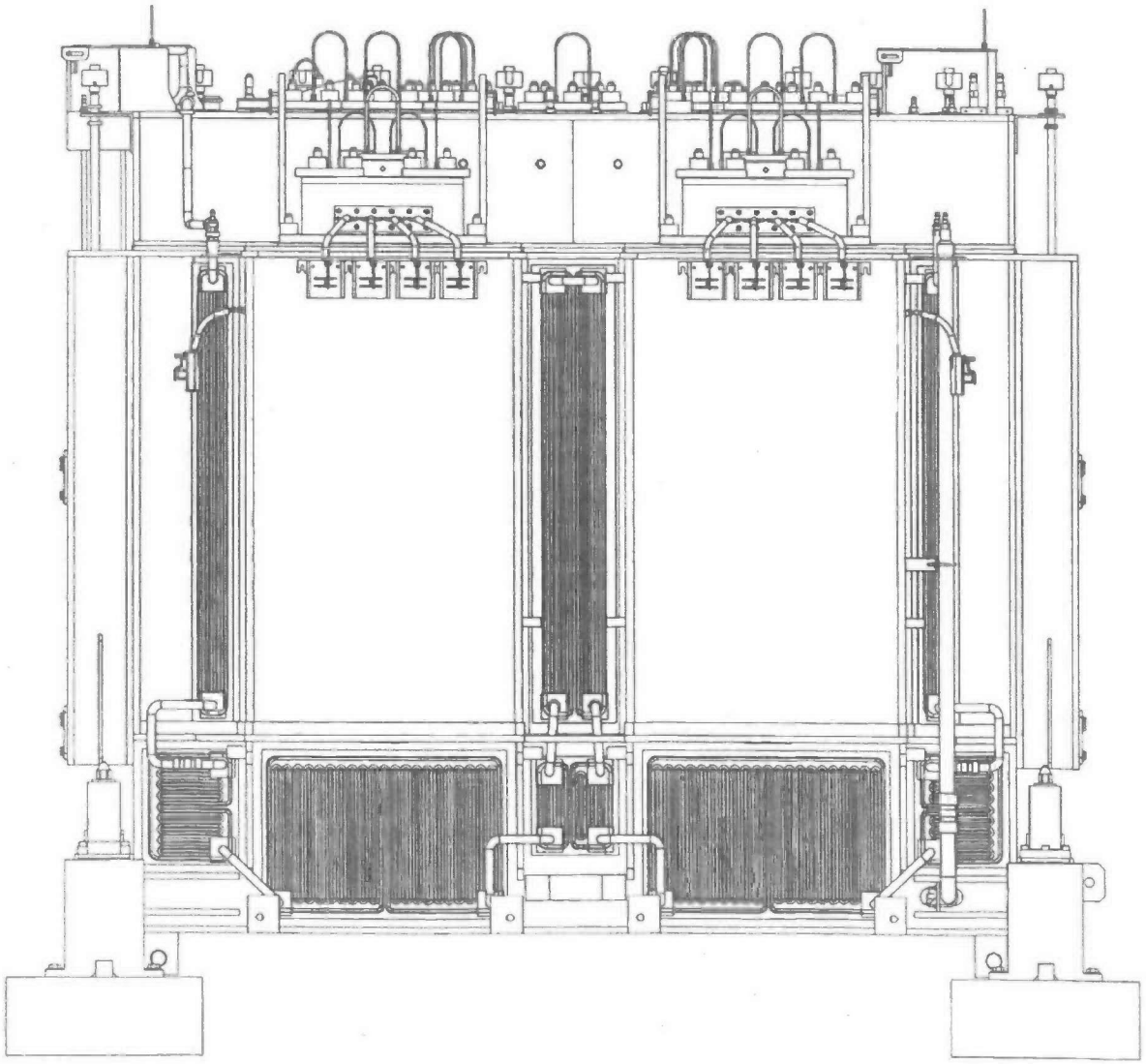

4.1.1.2.1.6 Expansion Control

Thermal expansion of the melter glass pool refractory is managed by the use of a jackbolt system shown in Figure 4-10, [3.5.1.1.5 - Refractory Expansion Control]. The jackbolt system is a series of spring-loaded bolts that push the refractory brick together to prevent the formation of gaps between the bricks. It is important to prevent the formation of gaps between the melter bricks, once they are hot, to prevent glass from seeping into the gaps and potentially leaking from the melter. Each jackbolt consists of a pressure pad (where the jackbolt presses on the cooling panel), spring assembly, shaft, and bushings. The jackbolts penetrate the wall modules and may be exposed to plenum gases hence they are fabricated from a corrosion resistant alloy.

The jackbolts are anchored to horizontal box-section beams welded to the exterior side of the wall modules. These beams form two bands around the north, east, and west sides of the melter. The south discharge wall of the melter is a fixed wall without jackbolts. The jackbolts push against the cooling panels to distribute the compressive force to the bricks. The cooling panels have been divided into sections to allow the jackbolt system to accommodate non-uniform movement. The north wall jackbolts compress the refractory package against the fixed south wall. The east and west wall jackbolts maintain compression on refractory joints parallel to the east and west walls.

Refractory expansion is accommodated by jackbolts in the horizontal plane only. Sufficient clearance has been designed into the melter to account for expansion of the refractory (glass pool and plenum) in the vertical direction. The south wall of the melter containing the discharge risers is a fixed wall and the refractory is allowed to expand away from this wall.

There are three jackbolts for each cooling panel; two jackbolts 21-inches from the bottom of each panel and one jackbolt in the upper central area of each cooling panel. With two side-by-side cooling panels on the east and west end walls, and three cooling panels on the north wall, the total number of jackbolts is 21. Pads are located at the jackbolt contact points on the cooling panels to help distribute the load and accommodate movement. The differences in relative movement and required force for each jackbolt make it necessary to have different spring assembly designs. The lower jackbolts are designed for maximum pressure throughout their range of movement to provide compression of vertical joints in the melter floor and lower sidewalls. The upper jackbolt on the central north panel will exert the least force in reaction only to the hydrostatic force of the glass after the glass pool level is established.

During melter assembly, removable spacer shims are placed between the glass contact refractory blocks to provide initial gaps equal to approximately 60 % of the amount of expansion expected during melter heat up. The jackbolts are pre-loaded to compress the refractory against the shims during melter assembly, and then loosened and the shims removed.

The jackbolts will then be slightly pre-loaded to hold the refractory in place while the melter is transported into the melter cave. The initial vertical refractory gaps are calculated such that the springs in the jackbolt assemblies are compressed to their final operating pressure because of refractory expansion during heat up. It is expected that no further jackbolt adjustments in the melter cave are required.

Position indicators are incorporated into each jackbolt assembly that can be viewed by in-cave, closed-circuit television (CCTV) cameras. During melter heat up and bake-out, the position indicators are visually monitored. If needed, it is possible to slightly move the north wall to center using the jackbolts and then readjust the jackbolts to the proper preload.

Figure 4-10 – Left-Hand Jackbolt Actuator

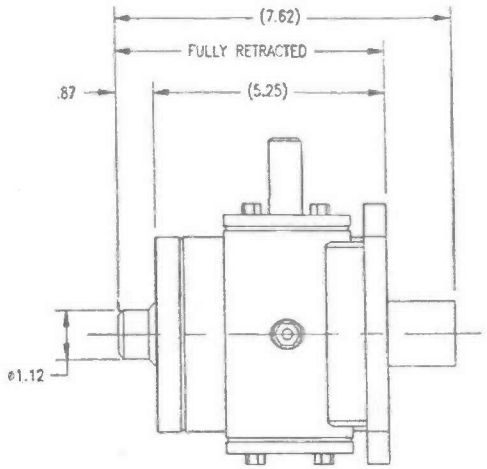

4.1.1.2.1.7 Base and Transport Wheels

The melter base plate forms a structural panel in conjunction with tee sections welded to the wheel end trucks of the base. The cooling panels are outside the melter interior and are connected to the base plate between the tee sections. This supports the refractory load and forms the base of the confinement shell. The remainder of the shell attaches to the bottom plate. The shell structure is fixed on the discharge side with external cooling panels that bolt on the south wall below and beside the discharge chambers. The base plate is 1-inch alloy N10276 plate and is supported east to west by six inverted T-beams below. Five cooling panels are mounted to the bottom of the base plate between the T-beams, with a sixth cooling panel assembly mounted to the bottom of the base plate adjacent to the discharge chamber support. Seven wheel assemblies are mounted in channels along both the east and west sides of the base. Each wheel assembly is pivoted at one end with a height adjustment bolt at the other end. Each height adjustment bolt has a spring-loaded preload feature to allow some minor movement of the wheels up and down during transport of the melter along rails. The melter is assembled from bottom to top, and from the inside out, on the base assembly setting on a melter-staging cart.

Figure 4-11 – Melter Base and Transport Wheels

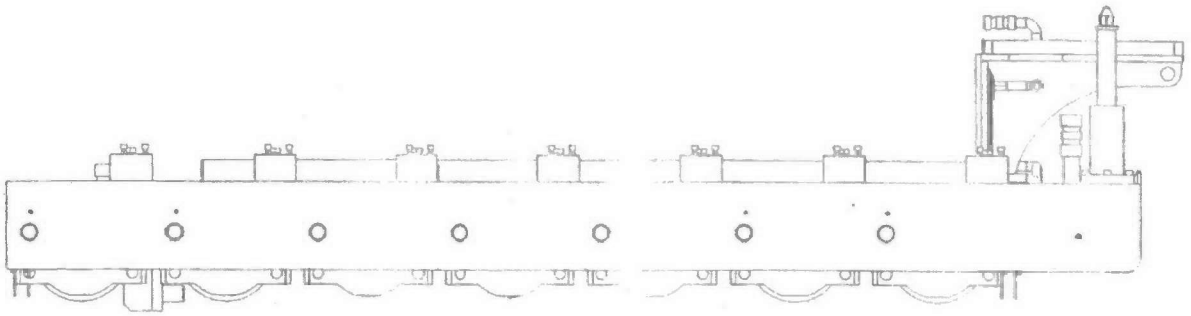

4.1.1.2.1.8 Seismic Restraint

The seismic restraints for the melter are designed to minimize the possibility of damage to the melter and the surrounding equipment in the event of an earthquake and are shown in Figure 4-12, [3.4.1.8 - Seismic Design for SSCs].

For restraint against lateral earthquake forces, the melter is equipped with pins located on the south end of both wheel housings and support plates located between the wheels on the west wheel housing with notches that conform to the shape of the rail. The pins are designed to be engaged with the remote impact wrench in the melter cave. A threaded pin positioned over the hole in the wheel housing is driven through the in-cave seismic fixture tongue with the impact wrench. This engages the pin in double shear, allowing the forces to be transferred through bearing stresses between the pin and plies of steel plate forming the seismic lug tongue and slot in the wheel housing. Thus, the restraint of the melter is not dependent on torque applied to the shaft of the pin. The bottom of the pin is tapered to allow for misalignment between the plies, which is expected. As the tapered section is driven through the holes, the melter will roll into final position. The clearance between the support plates and the rail allows for unimpeded melter traveler while providing additional lateral restraint along the length of the melter.

For restraint against vertical seismic forces, the melter is equipped with additional brackets that engage automatically as the melter is rolled into place. These tail hooks consist of two cylindrical steel pins whose axes are parallel to the melter rails. The pins hang below the melter base near the northeast and northwest corners and engage holes in vertical plates connected to the building's concrete structure. The holes in these plates are oversized to eliminate thermal growth-induced stresses and not interfere with smooth installation of the melter. Additional downward restraint is provided by the support plates located between the wheels on both wheel housings.

To avoid stress problems associated with thermal growth of the melter as it expands in relation to the seismic fixtures, the pin on the east wheel housing engages a slotted hole. The west pin absorbs all the lateral force in the east west direction, while the north-south forces are equally distributed between both pins. In addition, only the support plates between the wheels on the west wheel housing are notched to conform to the shape of the rail. The bottom surfaces of the support plates on the east wheel housing are flat and slightly raised above the rail surface, permitting the melter to expand freely in the east direction.

The fixtures used to fabricate the melter bases and assemble complete melters will ensure that all subsequent melters will fit the restraints set up during startup of the plant.

Figure 4-12 – HLW Melter Seismic Restraint

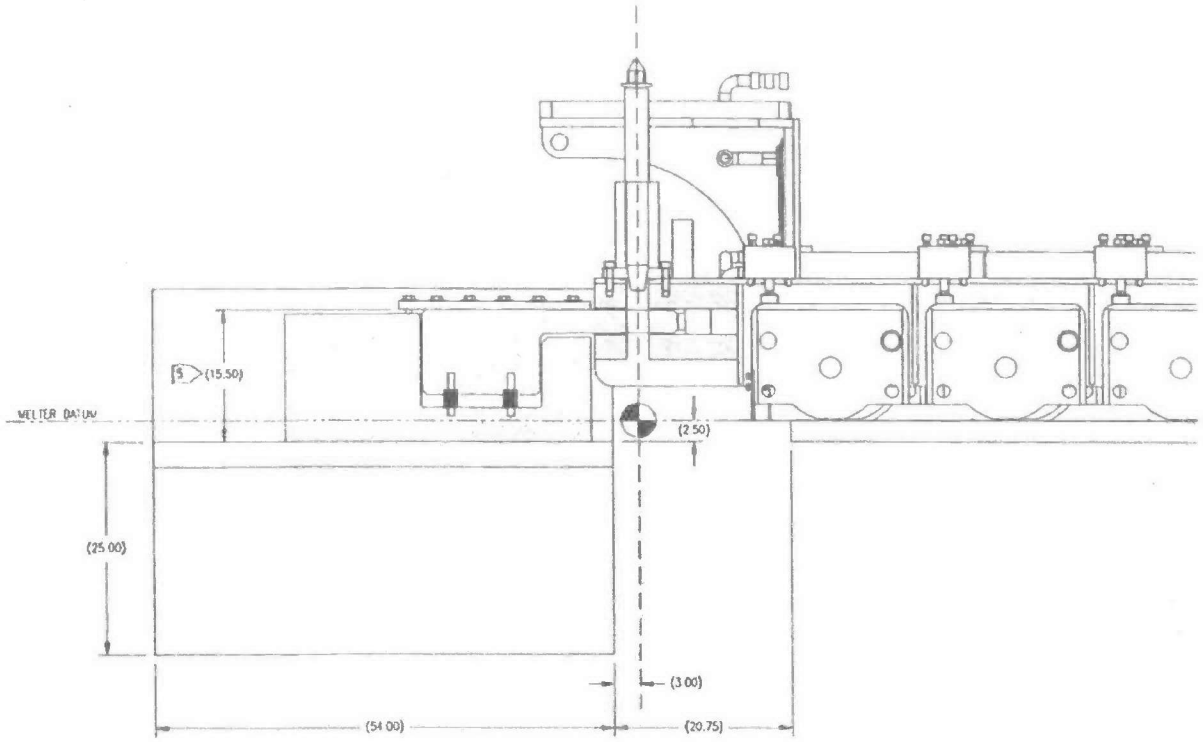

4.1.1.2.1.9 Lid

The melter lid structure supports the lid refractory and provides location and structural support for connection loads such as offgas ductwork, feed tubes, startup heaters or bubblers, thermowells, and other items servicing the melter through ports in the lid. The lid is an alloy 690 box structure with stiffening ribs and various service lines (such as air and water) between a 1.00-inch thick upper plate and a 1.00-inch lower plate. Alloy 690 construction provides corrosion resistance against plenum gases. Side wall plates extend 22 inches down to a seal ring plate enclosing the annular space between the upper and lower plates. The underside of the lower plate is faced with 1-inch ceramic board insulation. Below this insulation is a 5-inch layer of insulating castable refractory. The innermost lid refractory layer is a 6-inch layer of dense alumina-silica castable refractory. The castable refractory layers are suspended using ceramic refractory anchors that are attached with corrosion-resistant alloy clips to the bottom of the middle plate.

Figure 4-13 – Melter Lid

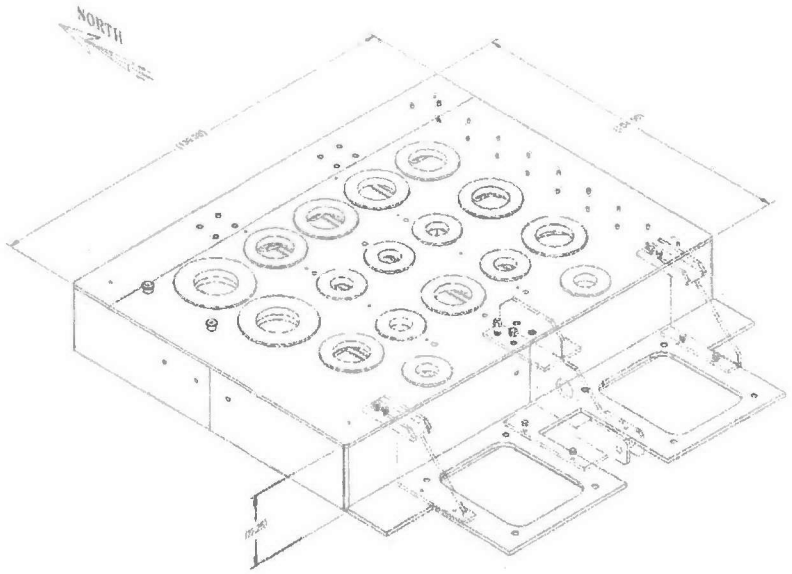

Service components to the melter are mounted in various ports through the lid (see Figure 4-13). In general all replaceable components exposed to the plenum gases will be fabricated from alloy 690. The lid ports in which these items are mounted are sleeved with tubing from the top lid plate to the bottom of the lid castable refractory. The various service components are mounted on flanges that bolt to the lid. Cylindrical, castable refractory plugs are suspended from the bottom of the flanges. Narrow gaps exist between the castable refractory plugs and the port liner sleeves that are purged by in-leakage air entering from weep holes in the mounting flanges. A mechanical description of the lid-mounted melter service items follows.

The main offgas uses a 12-inch diameter port (P03) in the northwest area of the lid. During normal operations, the offgas is drawn through this port, which is fitted with a film cooler. Film-cooler injection air is routed internally within the lid from a supply jumper that connects at N03A. This internal piping run connects to a manifold with a series of holes in the upper lid surface surrounding the port. The bottom surface of the film-cooler flange seals against these holes and has vents to allow the injection air to enter the film cooler from the lid. The standby offgas port (12-inch) is immediately south of the main offgas port. The standby port has an air service line similar to the main offgas port to allow the use of a film cooler in the future. Initially, there is no film cooler in the standby offgas port.

Five startup heaters are installed in centrally located, 10-inch ports (P05, P06, P07, P08, and P09). A frit addition tube will also be installed on one of the 6-inch feed nozzle ports (P01 or P02). Startup frit is charged into the melter in batches following the initial melter bake-out and heat-up. Seven bubblers will replace the startup heaters when melter startup is complete, [3.7.1.3 - Melter Temporary Startup Heaters].

Two glass pool and plenum thermocouple assemblies are installed in 6-inch ports (P48 and P49). Each thermocouple assembly will contain five thermocouple junctions, each extending to a different depth. Two will measure temperature at different levels in the plenum, and three will measure temperature at different depths in the glass pool.

Two level-detector tubes are installed in the 6-inch port (P34) at the center of the lid. The metal tubes will extend to different depths in the glass pool, and glass level is measured by bubbling argon ($\geq$ 1 SCFH) through each tube and comparing the backpressure to the reference plenum vacuum measured at the pressure tap in the standby offgas spool piece. Argon gas is supplied to the HMP system components from a vendor packaged Bottled Gas Skid (see Section 4.1.1.3).

The tubes used for bubblers, thermocouples, and level detectors are made from alloy 690. Each tube is sleeved with an extra layer of material in the zone penetrating the cold cap and glass melt surface. This protects against the aggressively corrosive environment in this zone. The metal tubes in these components (and airlift lances) that dip into the glass are electrically isolated from their mounting flanges to prevent shorting from the electrically-energized glass pool.

A plenum pressure tap is installed in a 10-inch port (P10) in the northeast corner of the lid. This tap provides an independent measurement of plenum pressure (The other measurement is from the tap on the standby offgas spool piece that is used for plenum pressure control and as a reference for the glass pool level detector).

Two feed nozzles are installed in 6-inch ports (P01 and P02) to the east and west of the level-detector port. The feed nozzles have two concentric tubes. Slurry feed from the air displacement slurry (ADS) pumps is delivered through the central tube of each nozzle. When transitioning from idle to feed mode, water for cooling the plenum is delivered through the annulus between the two concentric tubes. The slurry feed jumpers are external to the melter lid and connect directly to the center of the top side of the feed nozzle flanges. The plenum cool-down water is piped internally, within the lid, from a jumper to the east side of the lid to an outlet hole in the melter lid that interfaces with an opening on the bottom surfaces of the feed nozzle flanges.

Two airlift lances are mounted in 6-inch lid ports (P12 and P13) centered above the discharge riser holes. Air and argon are routed through the lid from east side lid jumpers to openings in the lid (N12 and N13) that interface with openings on the underside of the airlift lance mounting flanges (P12 and P13).

Two refractory thermocouple assemblies are mounted in small lid ports above the north refractory wall. The refractory thermocouple assemblies contain five thermocouples each that monitor temperature at the interface between the glass contact K-3 and the AZS refractory. The thermocouples monitor temperature of this refractory interface at five levels: 3 inches below the melter floor, and at 9 inches, 21 inches, 33 inches, and 45 inches above the melter floor. The temperature indication of the thermocouples is used by the logic controls to monitor and maintain control over the discharge, feed, offgas, and power operations of the melter, and coincidentally the melter products, [3.5.4.1 - Melter Shell Drain, 3.5.2.1.1 - Confinement of Offgas].

Eighteen connectors on the east side of the lid provide various air, water, and argon services to the numerous 10-inch and 6-inch lid ports. These connectors will be modular in function to allow quick connection/removal of services. Piping is installed in the lid that links the connectors to the lid ports. Components installed in the lid ports have flanges with holes that mate up with holes on the melter lid flange and thus connect the piping service to the component (see Figure 4-14), [3.5.4.4 - Modularization of Bubblers and Level Detectors, 3.4.4.1 - Remotely Maintainable and Replaceable Equipment and Components].

Figure 4-14 – Typical Fluid Service Connection to Lid Component

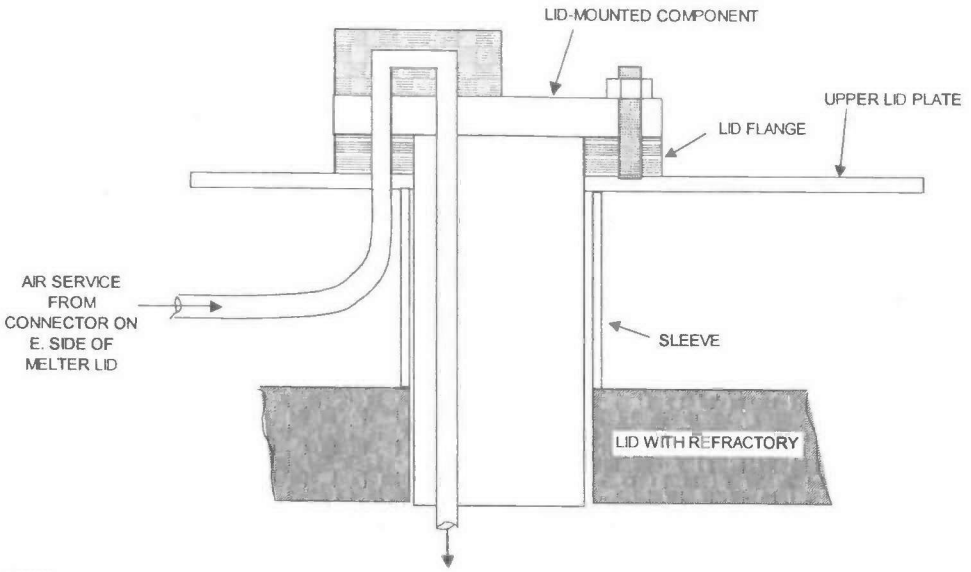

4.1.1.2.1.10 Offgas

Melter offgas is included here as part of confinement because a melter functional requirement is to confine offgas, [3.4.1.2 - Dedicated Offgas Systems]. The melter generates steam, gases, aerosols, vapors, and particulate. This offgas is drawn into the HLW melter offgas process treatment (HOP) system. The HOP system maintains plenum vacuum to a set point of minus 5in WC relative to its exterior environment, the HLW melter cave. This negative pressure, coupled with the gas barrier structures within the melter, assure that all melter-generated gases and aerosols are drawn into the HOP system for treatment. The discharge chambers are vented to the standby offgas spool piece through the discharge chamber vent jumpers, [3.5.2.1.1 - Confinement of Offgas] and are normally then vented to the melter plenum unless the isolation damper on the standby offgas line is open.

Control air is injected into the offgas line just above the film cooler to accommodate surges (~6X surges) that occur intermittently as feed slurry is introduced and incorporated into the glass pool.

While it may be possible to completely seal the melter to prevent any in-leakage, it is desirable to allow some air in-leakage to purge any corrosive gases that may escape to the outer areas of the melter package. Controlled in-leakage through perforations around service ports and melter shell penetrations are designed to further minimize corrosion of external melter components and escape of contamination. Additional air is also purged into the melter from various sources (see Figure 4-15 and Table 4-4). The main offgas port is a 12-inch diameter lid-opening port located at the northwest corner of the array of vertical ports through the melter lid. A replaceable film cooler is mounted from the top of the lid by a flange in the primary offgas port and extends 22 inches down through the lid into the melter plenum. The melter offgas passes through the inside of the film cooler which has an inside diameter of nominally 8 inches. Air flowing through a series of holes at the bottom of the film cooler and through louvered rings in the inner barrel of the film cooler cools the melter offgas and mitigates buildup of solid deposits as the offgas exhausts from the melter. The injection air is supplied by an internal passage in the melter lid to inlet holes in the bottom of the film-cooler flange. Therefore, the injection air jumper does not need to be removed to change out the film cooler. This also simplifies the piping design by placing the remote connector for air service away from the offgas jumper and associated spool piece that sits on top of the film cooler.

The film cooler may periodically need cleaning due to build-up from volatile salts and entrained feed materials. Deposited feed particles, condensed salts, and other loose material that have not baked onto the film-cooler surfaces or air passages may be washed by injecting demineralized water into the film-cooler injection air. For

heavier more immobile deposits a mechanical cleaner (air actuated tool piece that performs a rodding-out action) can be installed by mounting it vertically above the film cooler on the main offgas jumper. If the film cooler becomes severely fouled, such that it cannot be cleaned in-place, or is damaged by corrosion, it can be replaced. To replace the film cooler, the melter is placed in idle mode, melter ventilation is routed to the standby line, and the main offgas jumper is then removed. The film cooler is removed and replaced using the lifting bail mounted on the film-cooler flange, [3.4.2.4 - Support of Equipment Recovery, 3.4.4.1 - Remotely Maintainable and Replaceable Equipment and Components, 3.4.4.2 - Equipment Accessibility – Support of Maintenance and Operations].

A standby offgas spool piece is mounted above the melter lid and has multiple branches (see Figure 4-15). This spool piece provides connections for the following lines:

- Standby offgas line. This line is routed to the submerged bed scrubber (SBS) and is similar to the main offgas line but has an isolation damper that is normally closed. Melter pressure relief vents (flappers) will branch from the standby offgas line (jumper) routed from N53.
- Maintenance bypass line. This line bypasses the SBS and wet electrostatic precipitator (WESP) while maintenance is being performed on these items.
- Standby offgas air supply. This provides an air purge of~30 SCFM into the melter plenum to reduce deposition in the standby offgas port during normal operation, and provides up to 160 SCFM of air for cooling the melter offgas when the standby or maintenance bypass lines are used to ventilate the melter. This line is also connected to DIW for intermittent water wash.
- A pressure tap measures the melter plenum vacuum in the standby offgas spool piece during normal operation and provides a plenum vacuum reference for the glass level detector.
- Vent lines for both east and west discharge chambers, which will then normally vent to the melter plenum unless isolation damper on the standby offgas line is open.

Figure 4-15 – Piping Design for Standby Offgas Spool Piece

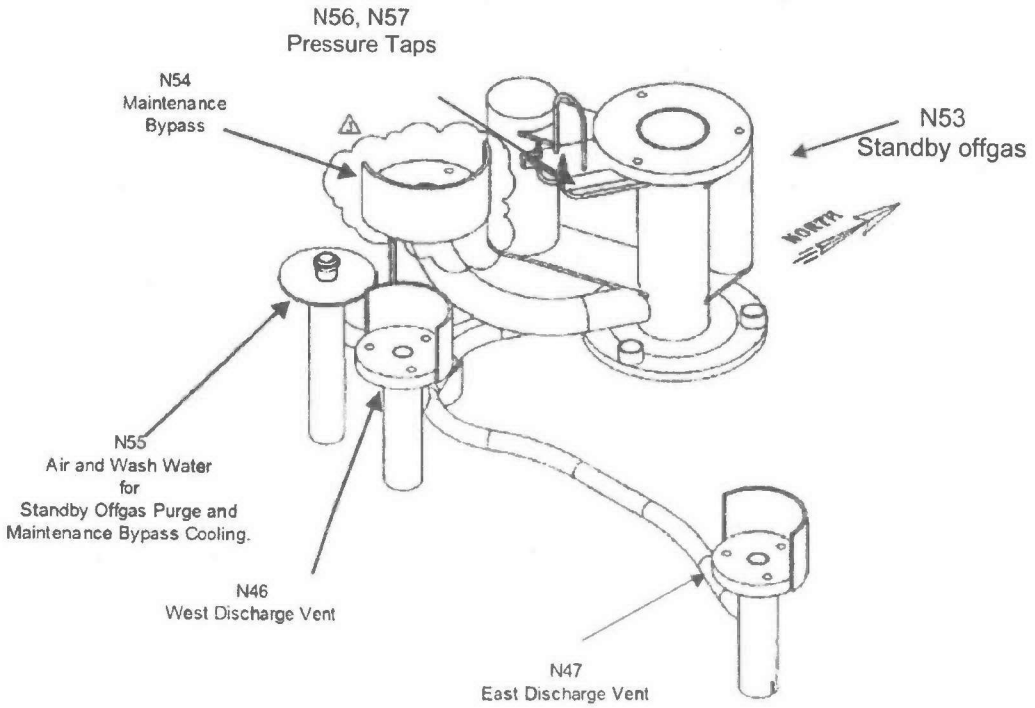

Table 4-4 – Summarized Service Flows and Air In-leakage for HLW Melter

Description	Flow per item (SCFM)	Number items	Total Flow (SCFM)	Into Melter (SCFM)
In-leakage				
Lid components (weep holes):				
9.5" diameter lid components	3.67	6	22	22
5.5" diameter lid components	1.83	6	11	11
Bottom plate purge holes	0.05	15	0.7	0.74
Wall Modules (weep holes):				
Jackbolts	1	21	21	21
Electrode extensions	1	3	3	3
Discharge chamber vents:				
Vent tube orifices:	17	2	34	34
Continuous Purges				
ADS pump blow down	1	2	2	2
Bubblers	1.5	7	10.5	10.5
Standby offgas duct purge	30	1	30	30
Plenum camera port	3	1	3	3
Level detector (Argon)	0.02	3	0.06	0.06
Plenum pressure	0.02	1	0.02	0.02
Plenum viewing CCTV camera cooling, exhaust to cave (if installed)	12	1	12	
Occasional Purges				
Film-cooler cleaner purge	10	1	10	
Flow into discharge chamber				
Airlift lances	1.89	2	3.8	
		Total	163.1	137.3

*Air in-leakage values provided are considered minimum for determining HOP exhaust demand and may increase 50 % over life of melter.

4.1.1.2.2 Joule-Heating Components

4.1.1.2.2.1 Electrodes and Electrode Extensions

There is one electrode on the upper east wall and one electrode on the upper west wall. The electrodes are made from 6-inch slabs of alloy 690. The electrodes are bored out to provide separate air cooling circuits for the electrode and the electrode extensions, and a passage for an electrode thermocouple. Connections for cooling air,

electrode thermocouples, and the electrode power bus are at the end of the cylindrical electrode extensions external to the melter shell. Cooling passages for the electrodes are near the electrode backside and have flow of up to 100 SCFM during normal operation. The electrode extensions have air passages to provide a cooled surface zone. This cooling effect protects against glass leakage along the electrode extension. Electrode extension cooling airflow is about 20 SCFM for each electrode. The air supply for electrode cooling is controlled by a temperature feedback loop operating a temperature control valve (TV-0406, -0420 Melter 1 and TV-2406, -2420 Melter 2). The air supply flow and pressure for the electrodes and electrode extensions is monitored. The air supply to the electrode extension is alarmed for low flow, [3.7.3.4 - Air Cooled Electrodes and Electrode Extensions].

Thermocouples are installed in the electrodes and extensions. These thermocouples monitor: 1) cooling air exhausted from electrodes, 2) cooling air exhausted from electrode extensions, and 3) temperature at embedded locations in the electrodes. For each electrode, there are three embedded thermocouples and one at the exhaust point for the electrode cooling and one at the exhaust point of the electrode extension cooling.

Figure 4-16 – East Electrode Assembly

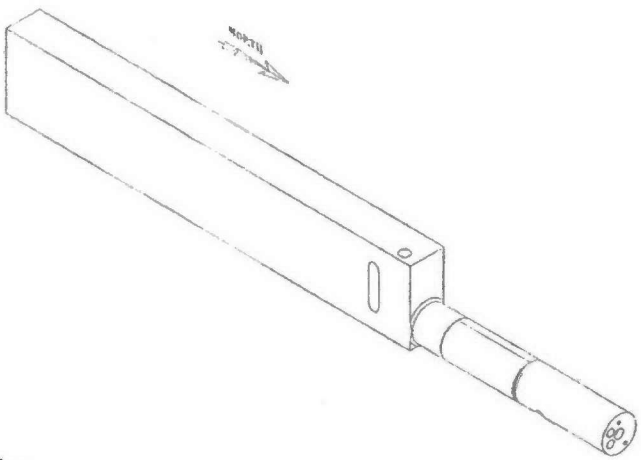

4.1.1.2.2.2 Power Supplies

The melter electrode power supplies are described in Section 4.1.2.14.

4.1.1.2.2.3 Electrode Buses

The East and West electrode buses enter the shield wall and route to each of the four electrode extension termination points. The North and South electrode extensions are fed from a central bus that passes through the melter base structure. The melter base and the portion of the shield walls through which any electrode bus passes is constructed of non-magnetic metal to reduce induction heating. The ampacity of the buses is sufficient for the maximum expected current load of about 5800 amps that could pass through each electrode extension. The electrode buses are cooled by cooling water flowing through the pipe to remove heat generated in the buses.

4.1.1.2.2.4 Grounding

Grounding of the melter to the HLW vitrification plant grounding grid is an important safety feature. The melter will be carrying up to thousands of amps through the electrodes, and if short-circuiting were to occur, it could pose a significant electrical hazard. In addition, the melter is known to pass current to its shell through inductance grounding. Metal sections of the melter, lid, and discharge chamber components are electrically interconnected and are connected to the melter base and wheels.

The melters meet NEC requirements for equipment grounding via high-pressure contact between the stainless steel rails and fourteen carbon steel melter wheels. Both rails are bonded to an equipment ground pad via a 4/0 AWG equipment-grounding conductor (CCN 085880), [3.7.3.3 - Grounding of the Melter].

4.1.1.2.2.5 Glass Pool Thermocouples

Two thermowells mounted through the melter lid with multiple element thermocouples are used to provide the average temperature of glass pool and support temperature feedback control for the glass pool joule heating. The elevation of the glass pool thermocouples above the melter floor is shown in Table 4-5. The three lower thermocouples in each thermowell measure glass pool temperature while the upper two thermocouples measure the plenum temperature.

Table 4-5 – Locations of Glass and Plenum Thermocouples in the Lid-Mounted Thermowells

Height above glass tank floor, inches	Region of melter
23	Glass pool
26	Glass pool
29	Glass pool
59	Plenum
62	Plenum

Note: Nominal glass pool depth is 44 inches; top of plenum is 83 inches above bottom of glass pool.

The glass pool thermocouples are averaged to provide the glass pool temperature and indicate if any adjustments to feed or bubbler flows are needed. The average glass pool temperature should be 1150°C and not vary more than ±50°C/hr during feed or discharge operations (per vendor recommendations). The average temperature will have a high and low alarm.

Figure 4-17 – Thermowell and Thermocouple Probe

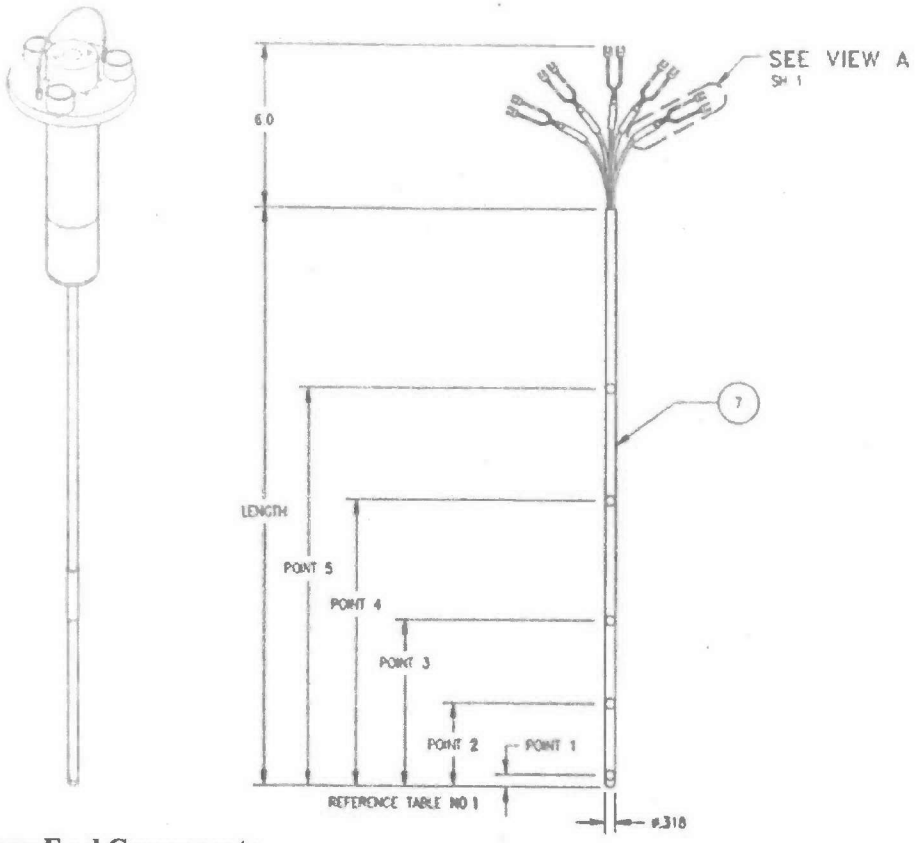

4.1.1.2.3 Slurry Feed Components

This section describes the HMP system components relevant to the slurry feed system: the ADS feed pumps, feed nozzles, and plenum thermocouples used to control the feed rate, [3.5.1.1.3 - Feed Nozzles].

4.1.1.2.3.1 HFP ADS Feed Pumps

This section provides back ground information of the HFP system as it interfaces with the HMP system for slurry feeding. For further detailed information about HFP ADS feed pumps see document 24590-HLW-3ZD-HFP-00001, *HLW Melter Feed Process (HFP) and Concentrate Receipt Process (HCP) System Design Description.* System HFP provides slurry to the melter. Pretreated HLW waste is combined with glass forming chemicals (GFC) in a recipe that will result in the desired glass product. The feed is transported to the melter by two air displacement slurry (ADS) pumps. The pumps set in the melter feed tank so that the agitated feed slurry will flow into the submerged pump cavity, past a screen which keeps out particles large enough to plug the feed line. A poppet in the bottom of pump moves up and down alternately to: close off the cavity from the tank and to open the feed line to the melter to feed; and then close the feed line and open the pump cavity to the tank to allow slurry to fill the pump. Air is used to push the one gallon volume of slurry to the melter. At nominal feed rates, each pump cycles through this feed stroke about every 1½ to two minutes. The logic for each pump and the coordination of the pumps is done through an ADS Master Controller. Water feed at start-up, pump start, shutdown, and water flushes are all handled through the master controller. The pump timing is staggered by the master controller so that they do not push feed into the melter together.

The ADS pumps each pump to a feed nozzle in the melter lid. For the best distribution of feed over the melter surface both pumps are used. In the event of pump failure, one pump can continue operation. Slurry flow can be

unreliable as solids drop out of flow stream and begin to agglomerate, if the flow rate is not high enough. The pulsed flow of the ADS pump is designed to help keep lines clear and maintain flow. Even with this feature, periodic water flush actions are programmed into the pump operation. Additionally, water flushes are required at start up, shutdown, and when pump flow is not normal. At start up, water is added to the melter to cool the plenum before slurry feed. A second source is used to add water through a line that flows directly to the feed nozzle. The water line coils around the feed tube, cooling the feed tube as well as the plenum. Normal, periodic flushes send water down the air pressure line, into the pump chamber, and through the feed line into the melter. This flush follows the slurry path to the melter. At shutdown, a second flush is also performed, called a screen flush. A screen flush sends water into the pump chamber, except that the poppet is now in the fill position so that the water flows out of the chamber past the poppet and screen, and into the Feed Tank.

To adjust feed rate, a total melter feed rate is entered into the master controller. Timing for each pump is computed to deliver the desired feed. If one pump is disabled the other pump will adjust to the full load. Pump operation in monitored by the pressure response of the air pressure line of each pump. A characteristic shape or curve is produced with each pump stroke. Figure 4-18 shows a display of the air pressure during a cycle from LAW Pilot Melter operation. Actual timing can change based on the physical installation, for example, the push or transfer time is adjusted based on the length of the feed line and the actual time to clear the line. Dwell time is calculated, and adjusted to maintain desired feed rate. Deviation from the normal shape is an indication that a water flush is needed to clean the pump and feed line.

Figure 4-18 – HLW ADS Pump Cycle

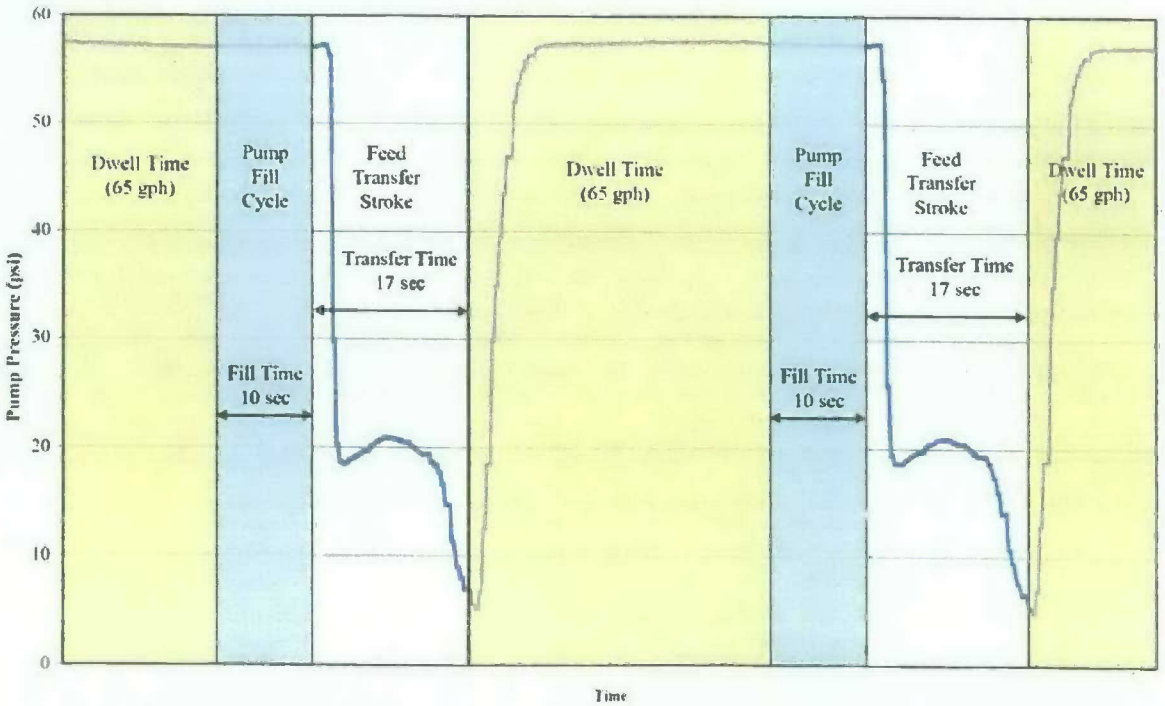

Figure 4-19 – HLW ADS Pump Assembly

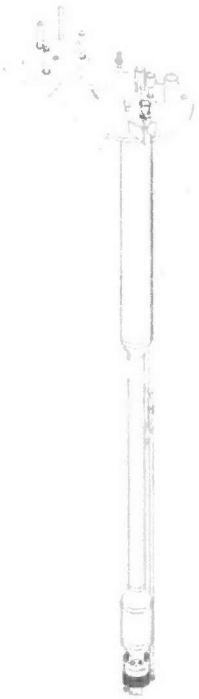

4.1.1.2.3.2 Feed Nozzles

The HLW melter(s) are fed through two feed nozzles, each supplied by its own dedicated feed line and air displacement slurry (ADS) pump. The feed nozzles can be accessed by means of removable penetrations in the shielded lid. A water-cooled jacket in the feed nozzle prevents drying of slurry at the nozzle end, which could lead to caking or clogging of the nozzle. A manual water flush sequence is immediately initiated whenever feeding is stopped (except in a high melter plenum pressure or high melter feed vessel level scenario). In this sequence, water is flushed through the ADS pumps as well as the feed lines. The feed lines are sloped towards the melter and are free draining to prevent accumulation of waste in the line and to help prevent leakage if the line requires disconnection, [3.4.2.3 - Isolation from Radioactive Material].

Figure 4-20 – HLW Feed Nozzle Assembly

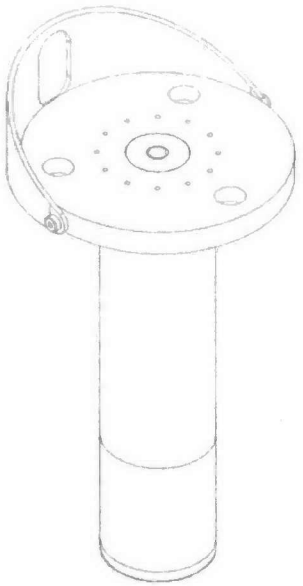

4.1.1.2.3.3 Plenum Thermocouples

The plenum temperature is directly associated to the percentage of glass pool surface covered by the cold cap, which in turn will affect the slurry feed rate. If the cold cap coverage area is low then the amount of "wet" feed contacting the hot glass surface increases causing excessive steam generation and increased amounts of feed material carried into the HOP offgas system. If the cold cap blankets a large area of glass surface (or completely covers the surface), then trapped gas and temperature instabilities can result in the glass pool which may lead to glass foaming or offgas surge events.

During pilot melter operations it was shown that the average plenum temperature is the best indicator of cold cap coverage and is the most useful feedback for controlling the melter feed rate. The plenum thermocouples were used to determine the average plenum temperature, [3.9.1.7.2 - Plenum Temperature Monitoring and Control].

The HLW melter plenum thermocouples (see Table 4-5) are part of the thermocouple assemblies installed in the thermowells with the glass pool thermocouples. The rate of feed addition to the melter is manually controlled based on the plenum temperature (400 to 600°C) to provide adequate cold cap coverage area.

Since the feed delivery rates to each of the feed nozzles can be independently controlled, the individual temperature indications for each thermocouple are also displayed. This will ensure that feed distribution can be skewed, if required, to maintain a uniform cold cap coverage area and in turn stabilize the plenum and glass pool temperatures.

4.1.1.2.4 Glass Discharge Components

The components directly related to glass discharge are the glass level detector, discharge riser, discharge trough, glass dam, discharge chamber (including discharge heaters, thermocouples, and ventilation), pour spout (and drip tray), glass pour viewing, and canister level detection. To increase reliability, each melter has two glass discharge pathways that are each rated for full glass production, [3.6.1.1 - Discharge Chamber, 3.6.1.2 - Design Capacity, 3.7.1.2 - Discharge Heaters, 3.9.1.7.1 - Redundant Melter Plenum Pressure, 3.9.1.7.5 - Air Lift Controls].

4.1.1.2.4.1 Glass Level Detector

Melter glass level is one of the key parameters used in evaluating melter performance as the level of glass in the melter affects the glass pool resistance and the glass discharge flow rates.

The melter glass level detector functions using three pneumatic probes. The operative principle is based on fluid statics. Two probes of different lengths are immersed in the glass pool, and one probe is in the plenum. The pressure reading from the longest probe is used to calculate glass level. This pressure reading, in combination with the reading of the shorter of the two glass pool probes, yields density. The plenum probe provides a reference pressure value used in the latter two calculations and provides an independent measure of plenum pressure. These probes are installed in a level detector assembly that passes through the melter lid and is referred to as the level probe, the density probe, or the reference probe, [3.4.4.3 - C3 Located Instrumentation, 3.9.1.7.1 - Redundant Melter Plenum Pressure, 3.9.1.7.3 - Glass Pool Level and Density Monitoring].

Each of the level detector probes are gas-purged to prevent the accumulation of solids during feeding operations. The glass pool probes (level and density probes) are purged to maintain the tube in a gas-filled environment so that static pressure can be measured. Low flow rates minimize error due to frictional line losses. The reference probe is purged with air because it terminates above the glass pool. The level and density probes are purged with argon to limit oxidation of the metal probe.

The level of the glass in the melter is determined using the measured differential pressure between the level probe and the density probe and the density probe and the plenum probe. A backup indication of melter level can be obtained from the riser air lances. Measuring the differential pressure between these air lances and the standby reference will indicate the level when airlift operations are not in progress.

Melter plenum pressure is determined by measuring the differential pressure between the plenum probe and the shielding annulus pressure. A second plenum pressure tap is used in the event that the primary tap is clogged. This second tap is located on the standby offgas port. There is a third pressure tap with independent pressure instrumentation that can activate interlocks, [3.9.2.2 - Melter Plenum Pressure – Safety Significant Interlock].

Measurement of melter glass level is used throughout melter operations to control the starting and stopping of melter glass discharge operations. The level detectors require an ISA supply as well as an argon gas purge. The air supply lines have flow meters, which will help operators monitor service to instrumentation both during operations as well as prior to startup. The pressure difference between the ISA system (which operates at positive pressure) and the melter (which operates at negative pressure), in addition to check valves on the air supply lines and isolation valves at the connection from the ISA lines to the instrument racks, will prevent back flow of air to the ISA system. The isolation valves also allow maintenance/replacement for the instrument racks, if needed, [3.4.2.3 - Isolation from Radioactive Material].

Figure 4-21 – Melter Level Detector Assembly

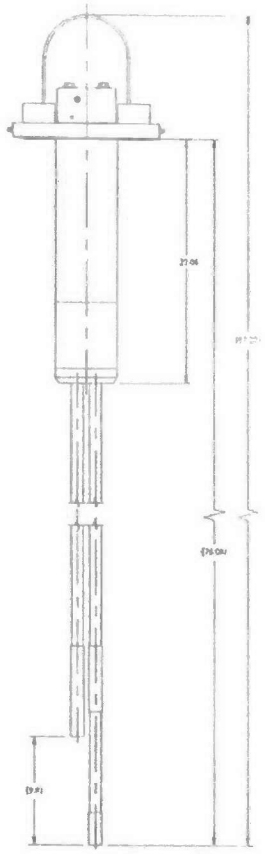

4.1.1.2.4.2 Discharge Riser

The discharge riser is the channel used to direct the molten glass into the discharge trough. There are two discharge risers, one for each discharge chamber. A tube referred to as the airlift lance is inserted from the lid of the melter into the riser to inject gas into the glass for airlifting, [3.6.1.3 - Discharge Rate].

4.1.1.2.4.3 Discharge Trough

During discharge operations, glass from the riser is airlifted up to the top end of the sloped discharge trough. It then gravity flows through the dam embedded in the melter wall and down into the discharge chamber where the glass stream falls from the trough tip. The glass then freefall pours through the pour flange, through the pour spout and into the steel waste canisters. The high mass of the trough provides added heat capacity which helps maintain the glass at the correct temperature.

4.1.1.2.4.4 Glass Dam

The glass dam is an alloy barrier attached to the discharge chamber, which provides glass division between the glass pool/riser and the discharge chamber while maintaining a "hot wall". The hot wall is required to allow for molten glass movement through the discharge riser. The alloy dams are designed to manage thermal stresses that occur during melter heat-up and during the glass transfers from the discharge chamber to the glass canisters.

Figure 4-22 – Melter Discharge Riser, Trough and Glass Dam

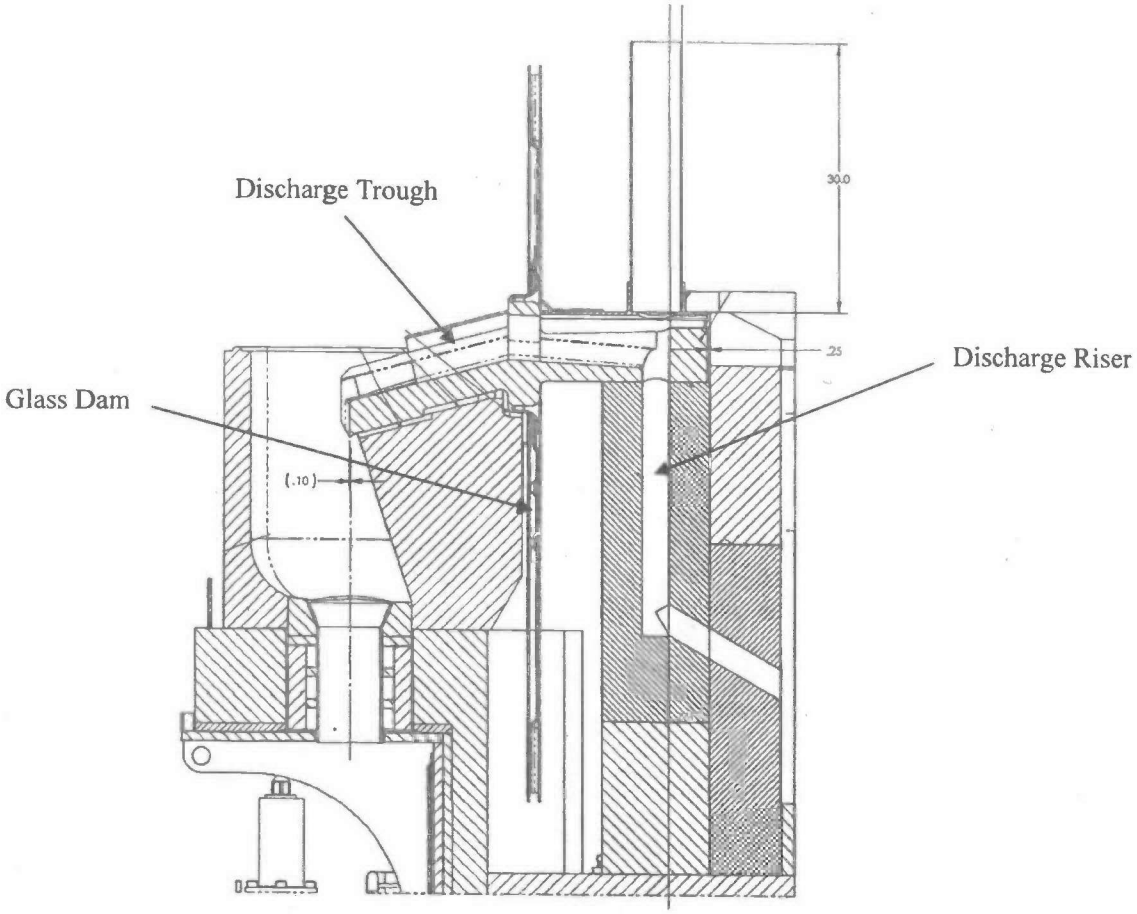

4.1.1.2.5 Discharge Chamber

4.1.1.2.5.1 Discharge Heaters, Thermocouples, and Ventilation

Eight silicon carbide heaters are used in each discharge chamber and are mounted in removable discharge lids. The heaters are conservatively rated to provide long heater life. Additionally, the discharge chamber is vented by a tube extending to near the bottom of the chamber to reduce airflow and related thermal cycling of the heater elements that can shorten heater life. The discharge chamber lid assembly with heaters is shown in Figure 4-23.

All the heater elements are controlled from one temperature loop. There are two thermowells in each discharge chamber with two thermocouples each providing temperature measurements at different levels in the discharge chambers. Thermocouple locations are near the discharge tip, rather than low in the discharge heater chamber, to avoid offsets caused by the radiant heat from the glass discharge, effects of airflow near the bottom of the vent tube, and heat loss due to the lower pour spout opening. The tip of the discharge trough is positioned such that the heater elements provide radiant heat from top, sides, and as much of the bottom as possible.

An auxiliary heater around the opening to the pour spout at the bottom of the discharge chamber is cast into the castable refractory. This heater will allow for the melting of glass that may accumulate at the bottom of the discharge chamber. The auxiliary heater is not used under normal operating conditions and would only be used in

the event of an accumulation of frozen glass that interfered with glass pouring. The power requirement of the auxiliary heater is approximately 4 kW.

Figure 4-23 – Discharge Lid Assembly with Heaters

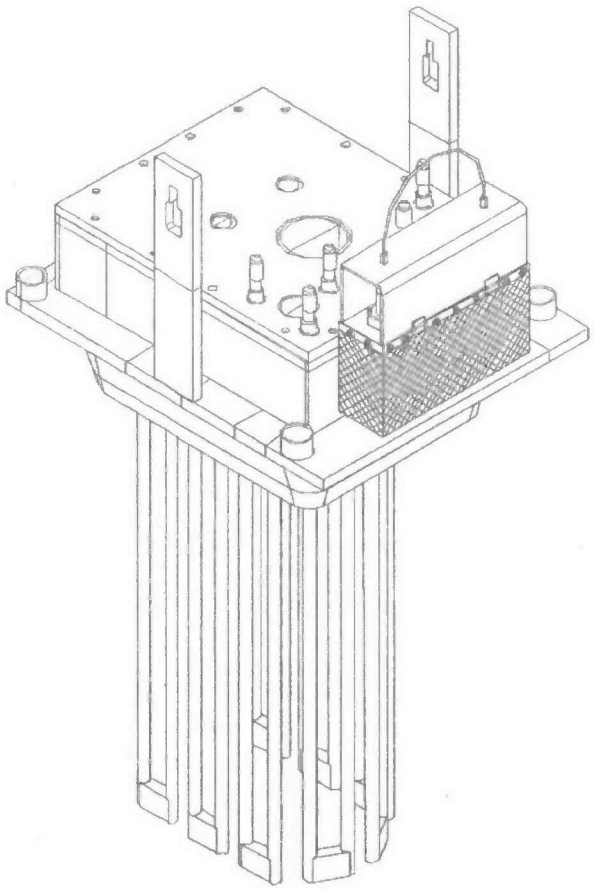

4.1.1.2.5.2 Pour Spout and Drip-Tray

The pour spout and drip-tray assembly connects the canister to the melter discharge chamber to confine glass drips and inadvertent pours, confine volatile glass components, and prevent foreign materials from entering the canister. The upper end of the assembly includes a funnel shaped connection between the drip tray portion and the bottom of the discharge chamber on the melter. Contained in the funnel portion is a pour-stream viewing camera. The lower portion contains the drip-tray which uses the linear motion of the canister on its transfer cart ("bogie") to push the drip-tray pan out of the way, as the canister aligns under the funnel section. The drip-tray assembly includes position sensors to provide a permissive to the melter airlift controls allowing pour operations when the canister is aligned properly with the pour spout. After the canister has been filled, it is moved down the pour tunnel for removal.

Once the canister is removed from under the pour spout, the air valves to the drip-tray actuator are cycled returning the drip tray to the closed position. Another position sensor will indicate when the drip-tray is in the closed position, and the air valves will cycle back to the vent position ready for the next canister. The drip-tray is designed for bulk glass confinement.

The pour spout / drip tray service life is expected to be the same as that of the melter. However, it is nonetheless a replaceable component because of the possibility of mechanical failure or non-recoverable glass blockage. The assembly is accessible from the melter cave via cover plates. The melter cave crane (HSH system) is used to lift out the old unit and install a new assembly (see Figure 4-24). When lowered in, the assembly hooks onto mounting pins attached to the melter base then swings under the discharge chamber. Alternatively, the drip-tray also has a remotely removable liner that may be replaced if it becomes filled with glass, enhancing the operable life of the drip-tray, [3.4.4.1 - Remotely Maintainable and Replaceable Equipment and Components, 3.4.4.2 - Equipment Accessibility – Support of Maintenance and Operations].

Figure 4-24 – Installation of Pour Spout and Drip Tray Assembly

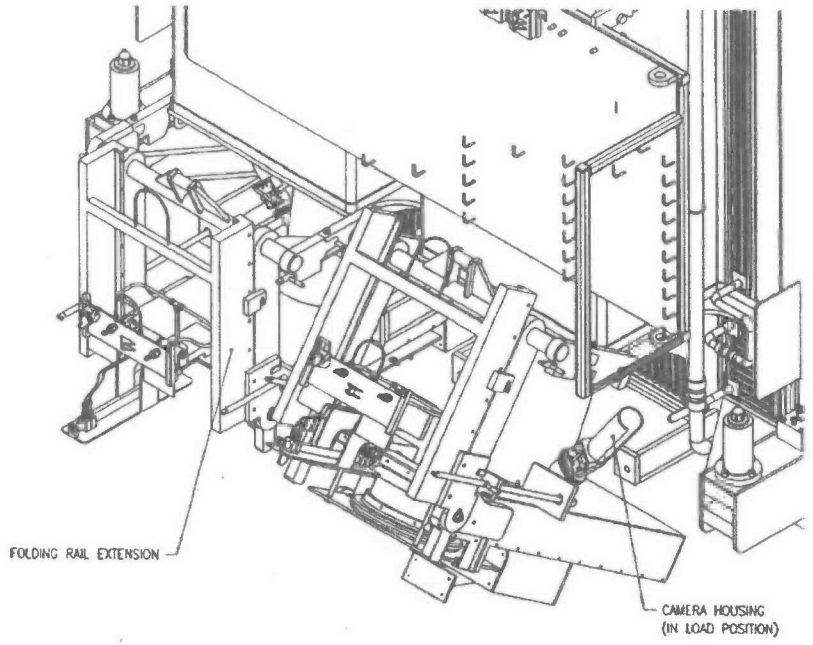

4.1.1.2.5.3 Glass Pour Viewing

Glass-discharge viewing cameras (CCTV) are located to view the discharge stream from side to side (across the east-west axis of the melter). This view of the glass stream will reveal the extent of curl back of the stream that is occurring due to the Coanda effect (stream distortion caused by clinging flow at the wall and higher velocity at outer free surface). The extent of the Coanda effect is an indicator of the flow rate of the glass condition of pour trough tip, and aids in discharge stream control, [3.9.1.4 - Glass Pour Stream Monitoring].

4.1.1.2.5.4 Canister Level Detection

Discharge canister level is measured using an IR (infrared) camera. The heat emitted from the hot glass in the canister makes an easily recognizable heat signature, which can be used to determine level. A thermal imaging camera is used that can discern the glass level over the upper 60% of the canister.

A secondary level detector is based on gamma radiation detection. A collimator in front of the gamma detector focuses on a discrete location on the canister. Each canister filling position has its own collimator and detector. If the glass rises to a high-high level, an alarm is activated and an interlock will stop airflow to the airlift riser. The gamma detector is designed to work even if glass accumulates in the drip pan. While there may be two canisters in position, only one canister is receiving glass at a time.

The WTP is contracted to achieve an average fill for all canisters of 95%, a minimum fill for individual canisters of 87%, [3.9.1.7.4 - Canister Fill Level Detection].

Figure 4-25 – IR Image of Glass Level in HLW Canister

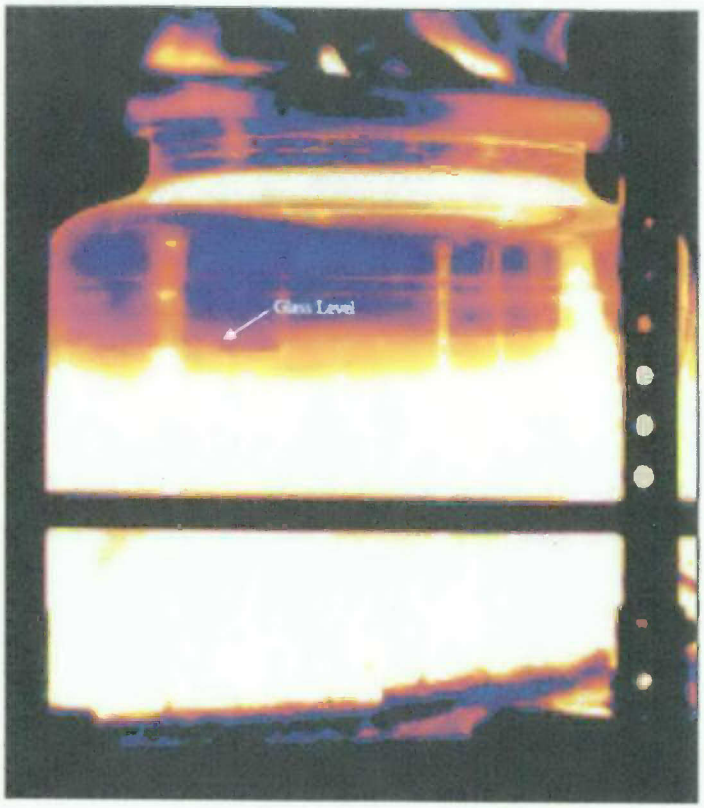

4.1.1.2.5.5 Melt-Pool Agitation

Melt-pool agitation is accomplished using bubblers that inject air into the melt, [3.5.1.1.6 - Agitators – Bubblers]. Agitation of the glass pool distributes heat generated in the glass by the electric current and increases circulation to the melt surface that helps melt or dissolve the underside of the cold cap. Bubblers work by injecting compressed gas continuously through nozzles located near the bottom of the glass pool. The nozzles are holes in metal tubes that mount from ports on the melter lid. As the gas bubbles rise, they carry glass upward with them causing forced circulation within the glass pool. The bubbler nozzles are submerged up to 40 inches deep in the glass, creating a static head pressure to overcome about 100 in WC, or approximately 3 psig.

Pilot-scale testing in the DM1000 and DM1200 melters at the Catholic University of America's Vitreous State Laboratory (VSL) show that without bubbling, the glass throughput of the HLW melter is no more than 1.5 MTG per day and in some cases less than this, depending on feed compositions. With bubblers, the capacity requirement of 3.75 MTG per day can likely be met. Seven bubbler assemblies are used in the full-scale melter. The bubblers use the same 10-inch lid ports as used for the startup heaters. Bubbler flow can be adjusted within a range of 1 to 3 SCFM, with 1.5 SCFM the expected rate for normal operation.

The bubbler assembly is designed for remote removal and installation. The bubbler tubes are electrically isolated from the melter lid because they are in contact with the energized glass pool. A bubbler assembly, with an attached 10-inch diameter ceramic plug, is inserted into the lid, [3.4.4.1 - Remotely Maintainable and Replaceable Equipment and Components, 3.4.4.2 - Equipment Accessibility – Support of Maintenance and Operations].

Figure 4-26 – Glass Bubbler Assembly

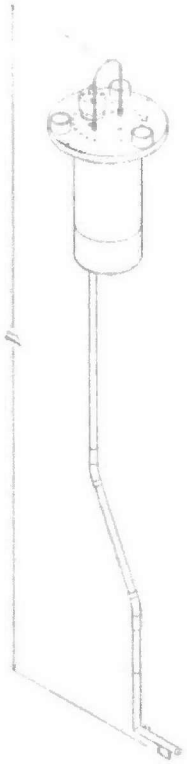

4.1.1.3 Argon Gas Supply

Argon gas for both HLW melters is supplied from Argon cylinders (HMP-SKID-00003). These cylinders are located in close proximity outside the HLW building. The HLW melter argon gas supply system is comprised of a rack containing eight cylinders, a manifold, pressure regulator, pressure safety valve, an automatic switching device (empty rack to full rack), and other accessories required for safe operation.

A spare rack with eight cylinders (sharing a common manifold with the primary rack) is provided to ensure continuous Argon supply at all times. The two racks have an automatic switch over control device, eliminating the need for the operator to monitor and switch racks upon depletion of gas in one rack. The empty cylinder rack will be replaced with a full cylinder rack by an outside vendor on a regular basis.

Each rack of eight cylinders supplies at least 20 days of Argon to both melters or a 40-day supply for one melter.

4.1.2 Boundaries and Interfaces

The HMP system receives blended melter feed from the HLW Melter Feed Process (HFP) System melter feed vessel. The HLW melter is fed via two air displacement slurry (ADS) pumps, each supplying a separate feed nozzle on the melter. The feed slurry falls from the nozzles, located in the melter lid, onto the cold cap surface in the melter. The offgas generated by the two HLW melters is cooled and treated by the HLW Melter Offgas Treatment Process (HOP) System. The HLW Canister Pour Handling (HPH) System transfers a canister to and from a pour spout beneath a melter cave where they are filled with HLW glass from the melter above, [3.6.1.3 - Discharge Rate].

The HLW melter process and associated piping and instrumentation are described on process flow diagrams (PFDs) and the piping and instrumentation diagrams (P&IDs) (see "Applicable Documents" Section 5). Detailed interfaces and the associated mechanical, electrical and instrument connections are described in the appendix A of

the HLW melter specification (24590-HLW-3PS-AE00-T0001) and in various melter design drawings. This information is summarized in the simplified P&ID of Figure 4-4. A plan view showing the locations of melter connections is in Figure 4-5. Table 4-1, Table 4-2, and Table 4-3 identify and describe the melter connections and ports appearing in Figure 4-4and Figure 4-5.

4.1.2.1 C5 Ventilation System (C5V)

The C5V provides ventilation for the melter exterior. Air in-leakage into the melter is also drawn from the C5V.

4.1.2.2 Demineralized Water System (DIW)

The demineralized water system (DIW) provides water for flushing lines and initially charging the cooling water. Interfaces are called out in Table 4-3 and shown on Figure 4-5, [3.4.2.3 - Isolation from Radioactive Material, 3.8.3.3 - Demineralized Water (DIW) Interface].

4.1.2.3 HLW Melter Feed Process System (HFP)

The HLW melter feed process (HFP) supplies the slurry feed. The interface occurs at the connections dedicated at the feed nozzles of the melter.

4.1.2.4 HLW Melter Handling System (HMH)

The HLW melter handling system (HMH) provides system and process transportation of the HLW melter and overpack from the melter assembly area to the cave air lock, and melter import to and export from the melter cave.

4.1.2.5 HLW Melter Offgas Treatment Process System (HOP)

The HLW melter(s) generate steam, gases, vapors, and particulates and there is a functional requirement for the melter to properly confine offgas. Melter offgas treatment is performed by the Melter Offgas Treatment Process System (HOP). The HOP system maintains plenum vacuum at a set point of -5 in WC relative to the melter cave. This negative pressure, coupled with the gas barrier structures within the melter, ensures that all melter-generated gases and aerosols are drawn into the HOP system for treatment. The discharge chambers are vented to the melter plenum via the standby offgas spool piece, [3.5.2.1.1 - Confinement of Offgas].

While it may be possible to completely seal the melter to prevent any in-leakage, it is desirable to allow some air in-leakage to purge any corrosive gases that may escape to the outer areas of the melter package. Controlled in-leakage through perforations around service ports and melter shell penetrations are designed to further minimize corrosion of external melter components and escape of contamination. Control air is injected into the offgas line just above the film cooler to accommodate small surges that occur on a minute-by-minute basis.

4.1.2.6 HLW Canister Pour Handling System (HPH)

The HLW canister pour handling (HPH) provides functionality for filling the canister with glass and for transportation of empty and full canisters.

4.1.2.7 HLW Melter Cave Support Handling (HSH)

The HLW melter cave support handling (HSH) provides systems and processes for remote maintenance and remote operation of the melter, including startup frit handling.

4.1.2.8 HLW Instrument Service Air (ISA)

The HLW instrument service air (ISA) provides air required for instrument service and other high purity air needs. The ISA system ties into HMP-RK-00012 and HMP-RK-00020 for Melter 1 and HMP-RK-00015 and HMP-RK-00022 for Melter 2, [3.8.3.2 - Instrument Service Air (ISA)].

4.1.2.9 HLW Low Voltage Electrical (LVE)

The HLW low voltage electrical (LVE) provides the power source for discharge chamber heaters and startup heaters. Refer to Section 4.1.2.14 for additional details.

4.1.2.10 HLW Medium Voltage Electrical (MVE)

The HLW medium voltage electrical (MVE) provides the power source for electrodes. Refer to Section 4.1.2.14 for additional details.

4.1.2.11 HLW Plant Cooling Water (PCW)

The HLW plant cooling water (PCW) supplies cooling water for the melters, [3.4.2.3 - Isolation from Radioactive Material, 3.8.3.1 - HMP System – Melter Cooling Panels].

4.1.2.12 Process Control System (PCJ)

The process control system (PCJ) is a plant-wide system for monitoring and control of the process, ventilation, utility, and electrical services within the HLW Facility. The PCJ is an integral part of the Integrated Control Network (ICN) and its functions are described in the PCJ System Description, [3.9.3.4 - Process Control System – Instruments].

4.1.2.13 Programmable Protection System (PPJ)

The programmable protection system (PPJ) functions as an independent layer of protection, which prevents or mitigates postulated accidents. The PPJ performs its protective functions by obtaining external inputs from the process, performing logic solving based on these inputs, and generating output signals to drive final elements in a way that places the process in a safe state. The PPJ functions are described in the PPJ System Description, [3.9.3.1 - Programmable Protection System – Active Safety Instruments].

4.1.2.14 Electrical

Power for the HMP system is provided by the plant low voltage electrical (LVE) system and the medium voltage electrical (MVE) system. The LVE system provides power to the melter discharge power supplies and the startup heater power supplies, while the MVE system provides power to the melter electrode power supplies. The power rating of the melter electrode power supplies (800 kW) is sufficient to maintain the glass pool within its operating temperature band during steady state and transient conditions. The power to the melter is adjusted manually or using a feedback control loop to maintain the average glass pool temperature (1150°C), [3.7.1.1 - Required Power, 3.7.3.1 - Non-Safety LVE Power, 3.7.3.2 - Non-Safety MVE Power].

The estimated power required for one HLW melter at 3.75 MTG per day throughput is about 400 kW. Each melter will have its own electrode power supply.

The control system for the power supply is described in the vendor submittal 24590-CM-POA-EBB0-00004-03-00003.

4.1.3 Physical Layout and Location

Each HLW melter (HMP-MLTR-00001/2) is in a separate melter cave at the + 3 feet elevation of the facility. The two melter systems in the HLW Vitrification Facility are identical. Melter 1 is located in Room H-0117; Melter 2 is located in Room H-0106. There is no personnel access to the melter caves after processing of radioactive feed begins.

The Melter 1 Plugs (HMP-PLUG-00001, 00002, 00003, 00004, 00005, 00006, 00007, 00008, 00009, 00010, 00011, 00012, 00013, 00027, 00028, 00031, 00032, 00033, 00034, 00035, and 00036) are alternate inserts for Melter 1 ports on top of Melter 1 (HMP-MLTR-00001). When not in use the plugs are stored (**TBD**).

The Melter 1 Level Detector (HMP-BBLR-00006) is inserted into the ports on the top of the Melter 1 (HMP-MLTR-00001) and immersed in the glass.

The Melter 1 Agitator Bubblers (HMP-BBLR-00001, 00002, 00003, 00004, 00005, 00015, and 00016) are inserted into the ports on the top of the Melter 1 (HMP-MLTR-00001) and immersed in the glass.

The Film Cooler Cleaner (HMP-FCC-00001) is installed above the Offgas Film Cooler in the event that the Offgas Film cooler needs to be rodded out.

Metler 1 Thermowells (HMP-SPOOL-00005, 00006, 00007, 00008, 00009, 00010) are located at various locations on the Melter 1 lid. The thermowells that are immersed in the glass and contain temperature elements that measure the glass pool temperature.

Melter 1 Frit Addition Funnel (HMP-HPR-00001) located in the Melter 1 lid.

Melter 1 Startup Heaters (HMP-HTR-00001, 00002, 00003, 00004, and 00005) are located in the Melter 1 lid.

Melter 1 Air Lift Lance (HMP-ALFT-00001, 00002) is located in the Melter 1 lid and immersed in the glass.

Melter 1 Discharge Chamber Jumper (HMP-SPOOL-00001, 00002) is located on the Melter 1 lid.

Melter 1 Discharge Vent (HMP-SPOOL-00003, 00004) is located in the Melter 1 lid.

Melter 1 Discharge Heater Assembly (HMP-HTR-00006, 00007) is located in the Melter 1 lid and immersed in the glass.

Melter 1 Pour Spout West Chamber (HMP-MPS-00002) attached to the side of the Melter 1.

Melter 1 Pour Spout East Chamber (HMP-MPS-00001) attached to the side of the Melter 1.

Melter 1 Plenum Pressure Tap (HMP-SPOOL-00021) is located in the Melter 1 lid.

Melter 1 Feed Nozzle (HMP-NOZ-00001, 00002) is located in the Melter 1 lid.

The Melter 2 Plugs (HMP-PLUG-00014, 00015, 00016, 00017, 00018, 00019, 00020, 00021, 00022, 00023, 00024, 00025, 00026, 00029, 00030, 00037, 00039, 00038, 00040, 00041, and 00042) are alternate inserts for Melter 2 ports on top of Melter 2 (HMP-MLTR-00002). When not in use the plugs are stored (**TBD**).

Melter 2 Feed Nozzle (HMP-NOZ-00003, 00004) is located in the Melter 2 lid.

The Melter 2 Level Detector (HMP-BBLR-00013) is inserted into the ports on the top of the Melter 2 (HMP-MLTR-00002) and immersed in the glass.

The Melter 2 Agitator Bubblers (HMP-BBLR-00008, 00009, 00010, 00011, 00012, 00017, and 00018) are inserted into the ports on the top of the Melter 2 (HMP-MLTR-00002) and immersed in the glass.

The Film Cooler Cleaner (HMP-FCC-00002) is installed above the Offgas Film Cooler in the event that the Offgas Film cooler needs to be rodded out.

Melter 2 Thermowells (HMP-SPOOL-00015, 00016, 00017, 00018, 00019, and 00020) are located at various locations on the Melter 2 lid. The thermowells that are immersed in the glass and contain temperature elements that measure the glass pool temperature.

Melter 2 Frit Addition Funnel (HMP-HPR-00002) located in the Melter 2 lid.

Melter 2 Startup Heaters (HMP-HTR-00008, 00009, 00010, 00011, and 00012) are located in the Melter 2 lid.

Melter 2 Air Lift Lance (HMP-ALFT-00003, 00004) is located in the Melter 2 lid and immersed in the glass.

Melter 2 Discharge Chamber Jumper (HMP-SPOOL-00011, 00012) is located on the Melter 2 lid.

Melter 2 Discharge Vent (HMP-SPOOL-00013, 00014) is located in the Melter 2 lid.

Melter 2 Discharge Heater Assembly (HMP-HTR-00013, 00014) is located in the Melter 2 lid and immersed in the glass.

Melter 2 Pour Spout West Chamber (HMP-MPS-00004) attached to the side of the Melter 2.

Melter 2 Pour Spout East Chamber (HMP-MPS-00003) attached to the side of the Melter 2.

Melter 2 Plenum Pressure Tap (HMP-SPOOL-00022) is located in the Melter 2 lid.Argon Supply skid (HMP-SKID-00003) is located in close proximity outside the HLW building. The HLW Melter 1 & 2 argon gas supply system is comprised of two racks each containing eight.

4.1.4 Principles of Operation

The HMP system consists of two identical joule-heated melters. The melters have four internal compartments; the glass tank, two discharge chambers, and the melter plenum. Each melter is connected to a dedicated feed vessel and offgas system. The melter receives feed slurry from the HFP system which falls from the nozzles located in the melter lid, onto the cold cap surface in the melter. The offgas generated by the two HLW melters is cooled and treated by the HOP system. The HPH system transfers canisters to and from pour spouts beneath a melter cave where they are filled with HLW glass from the melter above.

During melter startup pre-made glass, or frit, is used to create the glass pool. Five temporary radiant heaters mounted inside the plenum will provide the heat for initial melter bake-out and heat-up. When the melter reaches its operating temperature, frit is added through a frit addition tube to establish a molten glass pool. Once the glass depth is sufficient to form a conducting path between the electrodes, joule heating is initiated. Frit will continue to be fed until the melting cavity is filled sufficiently to sustain operation. At this time, the start-up heaters are removed and replaced by seven bubblers. Additional frit will then be added to raise the molten glass pool to its normal operating level, followed by the immediate installation of the remaining normal melter operating lid components.

The glass pool temperature is monitored by thermocouples signals that are averaged to provide the glass pool temperature and indicate if any adjustments to feed or bubbler flows are needed. The average glass pool temperature should be 1150°C and not vary more than ±50°C/hr during feed or discharge operations. After the glass pool is established the feed slurry will be fed to feed nozzles located in the melter lid and fall onto the molten glass surface within the melter. The feed lines are sloped towards the melter and are free draining to prevent accumulation of waste in the line and to help prevent leakage, [3.8.4.1 - Flushing, Draining, and Slopes]. The feed material will form a distinct layer, often referred to as the "cold cap," on the surface of the glass pool. Within this layer, several physical and chemical processes occur simultaneously as the feed material is heated from ambient to the melter glass pool temperature. First, the water in the feed will evaporate leaving a layer of dried waste and glass-forming chemicals. As the temperature of the dried material increases due to heat transfer from the glass pool, gases will evolve from the decomposition of salts, dehydration of compounds, and decomposition of organic compounds. Finally, in the lowest layers of the cold cap, the calcined feed material dissolves as it enters the glass pool.

As part of the feed process the HLW melter(s) generate an offgas stream containing steam, gases, vapors, and particulates. This offgas stream leaves the melter through a vent in the melter lid where is cooled and treated by the HOP system film cooler. The film cooler may periodically need cleaning due to build-up from volatile salts and entrained feed materials. Deposited feed particles, condensed salts, and other loose material that have not baked onto the film-cooler surfaces or air passages may be washed by injecting demineralized water into the film-cooler injection air. For heavier more immobile deposits the HMP film cooler cleaner is a mechanical cleaner (air actuated tool piece that performs a rodding-out action), will be installed by mounting it vertically above the film cooler on the main offgas jumper.

Melt-pool agitation is required to meet throughput requirements. Without bubbling, the glass throughput of the HLW melter is no more than 1.5 MTG per day. With bubblers, the capacity requirement of 3.75 MTG per day can likely be met. Melt-pool agitation is accomplished using seven bubbler assemblies that continuously inject air into the melt through nozzles located near the bottom of the glass pool. The nozzles are holes in metal tubes that mount from ports on the melter lid. The bubblers can be adjusted within a range of 1 to 3 SCFM, with 1.5 SCFM the expected rate for normal operation. Agitation of the glass pool distributes heat generated in the glass by the electric current and increases circulation to the melt surface that helps melt or dissolve the underside of the cold cap. As the gas bubbles rise, they carry glass upward with them causing forced circulation within the glass pool. The bubbler nozzles are submerged up to 40 inches deep in the glass. The bubbler assembly is designed for remote removal and installation. The bubbler tubes are electrically isolated from the melter lid because they are in contact with the energized glass pool.

To monitor the melt-pool depth two level-detector tubes are installed at the center of the lid. The metal tubes will extend to different depths in the glass pool, and glass level is measured by bubbling argon ($\geq$ 1 SCFH) through each tube and comparing the backpressure to the reference plenum vacuum measured at the pressure tap in the standby offgas spool piece. The probes are used for level and density detection and are purged with argon to limit oxidation of the metal probe. Argon gas for both HLW melters is supplied by the HMP system Gas Skid. The Gas Skid is located in close proximity outside the HLW building. The HLW melter argon gas supply system is comprised of a rack containing eight cylinders, a manifold, pressure regulator, pressure safety valve, an automatic switching device (empty rack to full rack), and other accessories required for safe operation. A spare rack with eight cylinders (sharing a common manifold with the primary rack) is provided to ensure continuous Argon supply at all times. The automatic switch over control device eliminates the need for the operator to monitor and switch racks upon depletion of gas in one rack. The empty cylinder rack will be replaced with a full cylinder rack by an outside vendor on a regular basis.

When the melt-pool is ready for discharge the HPH system transfers a canister to a pour spout beneath a melter cave where they are filled with HLW glass from the melter above. The melter discharge chambers are insulated heated chambers attached to the south side of the melter. They house troughs for directing molten glass delivered from the glass pool into the HLW canisters. The components directly related to glass discharge are the glass level detector, discharge riser, discharge trough, glass dam, discharge chamber (including discharge heaters, thermocouples, and ventilation), pour spout (and drip tray), glass pour viewing, and canister level detection. The glass discharge is controlled in a batch mode, while feeding is a continuous operation. The determination of when to start and stop a melter glass discharge is made using the melt-pool level detector, to ensure that the level of glass pool in the melter is maintained between the high and low operating levels.

To increase reliability, each melter contains two heated discharge chambers which are rated for full glass production are mounted on the south wall. While there may be two canisters in position, only one canister is receiving glass at a time. The glass is discharged by an airlift system. The glass will flow down an alloy trough and gravity drain through the discharge chamber into metal canisters for cooling, solidification, and storage, [3.9.2.4 - Canister Cooling Time – Safety Significant Interlock]. An alloy dam is attached to the trough and provides a physical barrier ensuring no glass leakage occurs between discharge chamber and the glass pool / risers.

Discharge canister level is measured using an IR (infrared) camera. The heat emitted from the hot glass in the canister makes an easily recognizable heat signature, which can be used to determine level. A thermal imaging camera is used that can discern the glass level over the upper 60% of the canister. A secondary level detector is based on gamma radiation detection. A collimator in front of the gamma detector focuses on a discrete location on the canister. Each canister filling position has its own collimator and detector. The gamma detector is designed to work even if glass accumulates in the drip pan. The WTP is contracted to achieve an average fill for all canisters of 95%, a minimum fill for individual canisters of 87%.

The pour spout and drip-tray assembly connects the canister to the melter discharge chamber to confine glass drips and inadvertent pours, confine volatile glass components, and prevent foreign materials from entering the canister. The upper end of the assembly includes a funnel shaped connection between the drip tray portion and the bottom of the discharge chamber on the melter. Contained in the funnel portion is a pour-stream viewing camera. The lower portion contains the drip-tray which uses the linear motion of the canister on its transfer cart ("bogie") to push the drip-tray pan out of the way, as the canister aligns under the funnel section. The drip-tray assembly includes position sensors to provide a permissive to the melter airlift controls allowing pour operations when the canister is aligned properly with the pour spout. After the canister has been filled, it is moved down the pour tunnel for removal. Once the canister is removed from under the pour spout, the air valves to the drip-tray actuator are cycled returning the drip tray to the closed position. Another position sensor will indicate when the drip-tray is in the closed position, and the air valves will cycle back to the vent position ready for the next canister.

4.1.5 System Reliability Features

RESERVED

4.1.6 System Control Features

The melter is equipped with instrumentation. The data (temperature, flow, level, density, and pressure) is collected by the sensing elements, which are located in the melter, through the melter lid. The signals, from the elements, are sent to the transmitters, which are located in instrument racks.

4.1.6.1 System Monitoring

The instrumentation, indicators, alarms, and other information provided to operation personnel, remote and local, to allow assessment of system status and performance.

Table 4-6 – Melter 1 System Monitoring

Equipment No.	Instrument No.	Properties	Function	Remarks
HMP-RK-00012	PI-0157	N/A	Local pressure indication for instrument air header PCV-0104 by-pass	None
YV-0158	ZI-0158	N/A	Indicates position of valve either open or closed to allow instrument air/ demineralized water to slurry feed nozzle	None
YV-0159	ZI-0159	N/A	Indicates position of valve either open or closed to allow instrument air to agitation bubbler	None

Equipment No.	Instrument No.	Properties	Function	Remarks
HMP-GL-32119-S10A-001/2	PI-0107	N/A	Pressure indication for instrument air to agitation bubbler	None
HMP-GL-32119-S10A-001/2	FI-0106	N/A	Flow indication for instrument air to agitation bubbler	None
YV-0160	ZI-0160	N/A	Indicates position of valve either open or closed to allow instrument air to agitation bubbler	None
HMP-GL-01996-S10A-001/2	PI-0111	N/A	Pressure indication for instrument air to agitation bubbler	None
HMP-GL-01996-S10A-001/2	FI-0110	N/A	Flow indication for instrument air to agitation bubbler	None
YV-0161	ZI-0161	N/A	Indicates position of valve either open or closed to allow instrument air to agitation bubbler	None
HMP-GL-01995-S10A-001/2	PI-0115	N/A	Pressure indication for instrument air to agitation bubbler	None
HMP-GL-01995-S10A-001/2	FI-0114	N/A	Flow indication for instrument air to agitation bubbler	None
YV-0162	ZI-0162	N/A	Indicates position of valve either open or closed to allow instrument air to agitation bubbler	None
HMP-GL-01994-S10A-001/2	PI-0119	N/A	Pressure indication for instrument air to agitation bubbler	None
HMP-GL-01994-S10A-001/2	FI-0118	N/A	Flow indication for instrument air to agitation bubbler	None
YV-0163	ZI-0163	N/A	Indicates position of valve either open or closed to allow instrument air to agitation bubbler	None
HMP-GL-01993-S10A-001/2	PI-0123	N/A	Pressure indication for instrument air to agitation bubbler	None
HMP-GL-01993-S10A-001/2	FI-0122	N/A	Flow indication for instrument air to agitation bubbler	None

Equipment No.	Instrument No.	Properties	Function	Remarks
YV-0173	ZI-0173	N/A	Indicates position of valve either open or closed to allow instrument air to agitation bubbler	None
HMP-GL-02076-S10A-001/2	PI-0172	N/A	Pressure indication for instrument air to agitation bubbler	None
HMP-GL-02076-S10A-001/2	FI-0171	N/A	Flow indication for instrument air to agitation bubbler	None
YV-0176	ZI-0176	N/A	Indicates position of valve either open or closed to allow instrument air to agitation bubbler	None
HMP-GL-32437-S10A-001/2	PI-0175	N/A	Pressure indication for instrument air to agitation bubbler	None
HMP-GL-32437-S10A-001/2	FI-0174	N/A	Flow indication for instrument air to agitation bubbler	None
YV-0268	ZI-0268	N/A	Indicates position of valve either to allow instrument air to flow to Film Cooler Cleaner or Vent to Cave	None
YV-0269	ZI-0269	N/A	Indicates position of valve either to allow instrument air to flow to Film Cooler Cleaner or Vent to Cave	None
HMP-FCC-00001	ZI-0270	N/A	Indicates the position of the Film Cooler Clean	
YV-0260	ZI-0260	N/A	Indicates position of valve either open or closed to allow instrument air/ demineralized water to flow to Off Gas Film Cooler	None
YV-0261	ZI-0261	N/A	Indicates position of valve either open or closed to allow instrument air/ demineralized water to flow to Off Gas Film Cooler	None
FV-0232	TI/FI-0232	N/A	Controls instrument air flow to Frit Funnel on Start-up and to Standby Duct Wash	None
YV-0208	ZI-0208	N/A	Indicates position of valve either open or closed to allow demineralized water to flow to Standby Duct Wash	None

Equipment No.	Instrument No.	Properties	Function	Remarks
YV-0254	ZI-0254	N/A	Indicates position of valve either open or closed to allow demineralized water to flow to Standby Duct Wash	None
YV-0264	ZI-0264	N/A	Indicates position of valve either open or closed to allow demineralized water to flow to Standby Duct Wash (HOP)	None
HMP-GL-32393-S11C-02	PI-0236	N/A	Local pressure indication on Instrument Air line down stream of flow control valve	None
HMP-WE-01580-S11C-01	FI-0209	N/A	Flow indication on Demineralized Water line down stream of shut off valve	None
HOP-RK-00027	FI-0228	N/A	Flow indication on demineralized water line to HOP-MISTR-00013	None
HOP-RK-00027	PI-0249	N/A	Pressure indication on demineralized water line to HOP-MISTR-00013	None
YV-0262	ZI-0262	N/A	Indicates position of valve either open or closed to allow demineralized water to HOP-MISTR-00013	None
HOP-RK-00027	FI-0267	N/A	Flow indication on demineralized water line to HOP-MISTR-00013	None
HOP-RK-00027	PI-0250	N/A	Pressure indication on demineralized water line to HOP-MISTR-00013	None
YV-0263	ZI-0263	N/A	Indicates position of valve either open or closed to allow demineralized water to HOP-MISTR-00013	None
HMP-WS-00053-S11C-11/2	FI-0316	N/A	Flow indication on Cooling Water supply line	None
HMP-WS-00053-S11C-11/2	PI-0313	N/A	Local pressure indication on Cooling Water supply line	None
HMP-WS-00049-S11C-11/2	FI-0306	N/A	Flow indication on Cooling Water supply line	None
HMP-WS-00049-S11C-11/2	PI-0303	N/A	Pressure indication on Cooling Water supply line	None
HMP-WS-00078-S11C-11/2	FI-0321	N/A	Flow indication on Cooling Water supply line	None
HMP-WS-00078-S11C-11/2	PI-0318	N/A	Local pressure indication on Cooling Water supply line	None

Equipment No.	Instrument No.	Properties	Function	Remarks
HMP-WS-00048-S11C-02	TI-0352	N/A	Temperature indication on Cooling Water return line	None
HMP-MLTR-00001	TI-0337 thru 0341	N/A	East Refractory Thermowell indication at different depths	None
HMP-MLTR-00001	TI-0342 thru 0346	N/A	West Refractory Thermowell indication at different depths	None
HMP-MLTR-00001	TI-0920	N/A	Average of East and West Thermowell indication at different depths	None
HMP-MLTR-00001	TI-0920A/B, 921A/B/C	N/A	East Thermowell indication at different depths	None
HMP-MLTR-00001	TI-0920C/D, 921D/E/F	N/A	West Thermowell indication at different depths	None
HMP-MLTR-00001	TI-0406, 0406A/B/C/D/E	N/A	East Electrode indication	None
HMP-MLTR-00001	TI-0420, 0420A/B/C/D/E	N/A	West Electrode indication	None
HMP-DL-32414-S10A-002	PI-0426	N/A	Local pressure indication down steam of PCV-0402	None
HMP-DL-32414-S10A-002	PI-0403	N/A	Local pressure indication down steam of PCV-0427	None
HMP-DL-32415-S10A-001	FI-0419	N/A	Flow indication of cooling air to electrodes	None
HMP-DL-32415-S10A-001	PI-0418	N/A	Local pressure indication of cooling air to electrodes down stream of control valve	None
HMP-DL-32416-S10A-001	FI-0424	N/A	Flow indication of cooling air to electrodes	None
HMP-DL-32416-S10A-001	PI-0423	N/A	Local pressure indication of cooling air to electrodes down stream of control valve	None
HMP-DL-32417-S10A-001	FI-0405	N/A	Flow indication of cooling air to electrodes	None
HMP-DL-32417-S10A-001	PI-0404	N/A	Local pressure indication of cooling air to electrodes down stream of control valve	None
HMP-DL-32414-S10A-001	FI-0410	N/A	Flow indication of cooling air to electrodes	None
HMP-DL-32414-S10A-001	PI-0409	N/A	Local pressure indication of cooling air to electrodes down stream of control valve	None
FV-0643	FI-0643	N/A	Flow indication of instrument air/Argon to airlift lance	None

Equipment No.	Instrument No.	Properties	Function	Remarks
FV-0648	FI-0648	N/A	Flow indication of Argon to airlift lance	None
HMP-SKID-00003	PI-0672	N/A	Local pressure indication after PCV-0671	None
HMP-SKID-00003	PI-0675	N/A	Local pressure indication after PCV-0674	None
HMP-SKID-00003	PI-0677	N/A	Local pressure indication after PCV-0676	None
HMP-SKID-00003	PI-0670	N/A	Pressure indication Argon bottles Bank B	None
HMP-SKID-00003	PI-0673	N/A	Pressure indication Argon bottles Bank A	None
HMP-RK-00021	LI-0668	N/A	Local/remote level indication of Melter east discharge	None
HMP-RK-00021	PI-0645	N/A	Local/remote pressure indication of Melter level indicator east discharge	None
YV-0667	ZI-0667	N/A	Indicates position of valve either open or closed to allow instrument air/Argon flow to airlift lance east discharge	None
HMP-MLTR-00001	TI-0658, 0658A/B/C/D	N/A	Temperature indication of Melter discharge chamber	None
HMP-MLTR-00001	TI-0758, 0758A/B/C/D	N/A	Temperature indication of Melter discharge chamber	None
HMP-MLTR-00001	TDI-0658	N/A	Temperature differential indication of Melter discharge chamber temperature elements	None
HMP-MLTR-00001	TDI-0758	N/A	Temperature differential indication of Melter discharge chamber temperature elements	None
FV-0743	FI-0743	N/A	Flow indication of instrument air to airlift lance	None
FV-0748	FI-0748	N/A	Flow indication of Argon to airlift lance	None
HMP-RK-00021	LI-0768	N/A	Level indication of Melter west discharge	None
HMP-RK-00021	PI-0745	N/A	Pressure indication of Melter level indicator west discharge	None
YV-0767	ZI-0767	N/A	Indicates position of valve either open or closed to allow instrument air/Argon flow to airlift lance west discharge	None

Equipment No.	Instrument No.	Properties	Function	Remarks
HMP-RK-00013	FI-0825	N/A	Local flow indication for instrument air west camera purge cooling	None
HMP-RK-00013	PI-0829	N/A	Local pressure indication for instrument air west camera purge cooling	None
HMP-RK-00013	FI-0833	N/A	Local flow indication for instrument air west camera purge cooling	None
HMP-RK-00013	PI-0831	N/A	Local pressure indication for instrument air west camera purge cooling	None
HMP-RK-00013	FI-0834	N/A	Local flow indication for instrument air east camera purge cooling	None
HMP-RK-00013	PI-0832	N/A	Local pressure indication for instrument air east camera purge cooling	None
HMP-RK-00013	FI-0838	N/A	Local flow indication for instrument air east camera purge cooling	None
HMP-RK-00013	PI-0839	N/A	Local pressure indication for instrument air east camera purge cooling	None
HMP-RK-00013	PI-0830	N/A	Local pressure indication for instrument air west camera purge cooling	None
YV-0841	ZI-0841	N/A	Indicates position of valve either allow instrument air flow to west camera purge cooling or vent	None
YV-0840	ZI-0840	N/A	Indicates position of valve either allow instrument air flow to east camera purge cooling or vent	None
HMP-MPS-00002	YI-0815A/B/C/D	N/A	Indication of presence and position of product canister west pour spout	None
HMP-MPS-00001	YI-0819A/B/C/D	N/A	Indication of presence and position of product canister east pour spout	None
HMP-GL-02022-S10A-001/2	FI-0828	N/A	Local flow indication for instrument air camera purge cooling west canister IR camera	None
West canister IR camera	LI-0816, 0816A	N/A	Level indication for west product canister	None

Equipment No.	Instrument No.	Properties	Function	Remarks
HMP-GL-02079-S10A-001/2	FI-0827	N/A	Local flow indication for instrument air camera purge cooling east canister IR camera	None
East canister IR camera	LI-0820, 0820A	N/A	Level indication for east product canister	None
HMP-GL-32380-S10A-001/2	FI-0835	N/A	Flow indication for instrument air camera purge cooling gamma detector	None
West canister gamma detector	LI-0818	N/A	Gamma level indication for west product canister	None
East canister gamma detector	LI-0817	N/A	Gamma level indication for east product canister	None
HMP-RK-00014	PI-0244	N/A	Local pressure indication for demineralized water to off gas film cooler	None
HMP-RK-00014	FI-0220	N/A	Flow indication for demineralized water to off gas film cooler	None
HMP-RK-00014	FI-0205	N/A	Flow indication for demineralized water to off gas film cooler	None
HMP-RK-00014	PI-0237	N/A	Local pressure indication for spare instrument air header to film cooler cleaner	None
HMP-GL-32392-S11C-03	PI-0241	N/A	Pressure indication for instrument air to film cooler	None
HMP-GL-32392-S11C-03	TI-0201	N/A	Temperature indication for instrument air to film cooler	None
HMP-GL-32392-S11C-03	FI-0201	N/A	Flow indication for instrument air to film cooler	None
YV-0233	ZI-0233	N/A	Indicates position of valve either open or closed to allow instrument air/demineralized water to film cooler	None
HMP-WE-01573-S11C-02	PI-0238	N/A	Local pressure indication for instrument air/demineralized water to film cooler	None
HMP-GL-32394-S11C-03	TI-0216	N/A	Temperature indication for instrument air to film cooler	None
HMP-GL-32394-S11C-03	FI-0216	N/A	Flow indication for instrument air to film cooler	None
YV-0234	ZI-0234	N/A	Indicates position of valve either open or closed to allow instrument air/demineralized water to film cooler	None

Equipment No.	Instrument No.	Properties	Function	Remarks
HMP-WE-01574-S11C-03	PI-0239	N/A	Local pressure indication for instrument air/demineralized water to film cooler	None
YV-0245	ZI-0245	N/A	Indicates position of valve either open or closed to allow instrument air to film cooler	None
HMP-WE-32393-S11C-02	PI-0246	N/A	Pressure indication for instrument air/demineralized water to film cooler	None
HMP-RK-00020	FI-0138	N/A	Local flow indication for instrument air to YV-0167	None
HMP-RK-00020	FI-0142	N/A	Local flow indication for instrument air to YV-0168	None
HMP-RK-00020	FI-0147	N/A	Local flow indication for instrument air to YV-0169	None
HMP-RK-00020	FI-0129	N/A	Local flow indication for instrument air/Argon to YV-0166	None
HMP-RK-00020	FI-0130	N/A	Local flow indication for instrument air/Argon to YV-0165	None
HMP-RK-00020	FI-0151	N/A	Local flow indication for instrument air to YV-0164	None
YV-0164	ZI-0164	N/A	Indicates position of valve either open or closed to allow instrument air to plenum pressure tap	None
YV-0165	ZI-0165	N/A	Indicates position of valve either open or closed to allow Argon to agitation bubbler	None
YV-0166	ZI-0166	N/A	Indicates position of valve either open or closed to allow Argon to agitation bubbler	None
YV-0167	ZI-0167	N/A	Indicates position of valve either open or closed to allow instrument air to HOP	None
YV-0168	ZI-0168	N/A	Indicates position of valve either open or closed to allow instrument air to cave reference pressure	None
YV-0169	ZI-0169	N/A	Indicates position of valve either open or closed to allow instrument air to shell drain	None

Equipment No.	Instrument No.	Properties	Function	Remarks
HMP-GL-02043-S10A-001/2, HMP-GL-02011-S10A-001/2	PDI-0143	N/A	Indicates pressure differential between instrument air lines, indicating backup shell pressure	None
HMP-GL-02011-S10A-001/2, HMP-GL-32375-S10A-001/2	PDI-0139B	N/A	Indicates pressure differential between instrument air lines, indicating plenum primary pressure	None
HMP-GL-02011-S10A-001/2, HMP-GL-32375-S10A-001/2	PDI-0139A	N/A	Indicates pressure differential between instrument air lines, shell leak detection	None
HMP-GL-02011-S10A-001/2, HMP-GL-32375-S10A-001/2	PDI-0139	N/A	Indicates pressure differential between instrument air lines, shell leak detection	None
HMP-GL-02043-S10A-001/2, HMP-GL-32375-S10A-001/2	LI-0144	N/A	Indicates pressure differential between instrument air lines, indicating molten glass level	None
HMP-GL-02014-S10A-001/2, HMP-GL-32375-S10A-001/2	LI-0131	N/A	Indicates pressure differential between instrument air/Argon lines, indicating molten glass level	None
HMP-GL-02014-S10A-001/2, HMP-GL-02041-S10A-001/2	DI-0132	N/A	Indicates density of molten glass	None
HMP-GL-02011-S10A-001/2, HMP-GL-32391-S10A-001/2	PDI-0152	N/A	Indicates pressure differential between instrument air/Argon lines, indicating molten glass level	None
YV-0170	ZI-01770	N/A	Indicates position of valve either open or closed to allow instrument air to plenum	None
HMP-WS-00081-S11C-01	FI-0326	N/A	Flow rate indication for cooling water supply west wall cooling panel	None
HMP-WS-00081-S11C-01	PI-0323	N/A	Pressure indication for cooling water supply west wall cooling panel	None
HMP-WS-00087-S11C-01	FI-0336	N/A	Flow rate indication for cooling water supply south wall cooling panel	None

Equipment No.	Instrument No.	Properties	Function	Remarks
HMP-WS-00087-S11C-01	PI-0333	N/A	Pressure indication for cooling water supply south wall cooling panel	None

4.1.6.2 Control Capacity and Locations

System, equipment, and component manual operational controls.

Table 4-7 – System Controls

Equipment No.	Instrument No.	Properties	Function	Remarks
HMP-FCC-00001	HS-0268	N/A	Hand switch to raise or lower the Film Cooler Cleaner	None
YV-0268	HS-0268	N/A	Hand switch to allow manual or automatic operation of the Film Cooler Cleaner plunger	None
YV-0269	HS-0269	N/A	Hand switch to allow manual or automatic operation of the Film Cooler Cleaner plunger	None
YV-0208	HS-0208	N/A	Hand switch to introduce demineralized water for standby duct wash	None
MVE-PSUP-30001	HS-0428A/B/C/D	N/A	Hand switch to put the melter heater in the off/standby/run/reset condition	None
LVE-PSUP-30003	HS-0057	N/A	Hand switch to provide power to the melter startup heaters	None
LVE-PSUP-30003	HS-0501	N/A	Hand switch to start/stop the melter startup heaters	None
LVE-PSUP-30002	HS-0076	N/A	Hand switch to trip the discharge chamber heaters	None
LVE-PSUP-30002	HS-0077	N/A	Hand switch for on/off the discharge chamber heaters	None
LVE-PSUP-30002	HS-0078	N/A	Hand switch to start the discharge chamber heaters	None
LVE-PSUP-30002	HS-0079	N/A	Hand switch to reset the discharge chamber heaters	None
LVE-PSUP-30002	HS-0669A	N/A	Hand switch to star/stop the east discharge chamber heaters	None
LVE-PSUP-30002	HS-0669S	N/A	Hand switch to star/stop the west discharge chamber heaters	None

Equipment No.	Instrument No.	Properties	Function	Remarks
YV-0204	HS-0204	N/A	Hand switch to open/close the valve to introduce demineralized water for injection in to an instrument air stream to clean the film cooler	None
YV-0219	HS-0219	N/A	Hand switch to open/close the valve to introduce demineralized water for injection in to an instrument air stream to clean the film cooler	None
YV-0233	HS-0233	N/A	Hand switch to open/close the valve to introduce demineralized water/ instrument air stream to clean the film cooler	None
YV-0234	HS-0234	N/A	Hand switch to open/close the valve to introduce demineralized water/ instrument air stream to clean the film cooler	None
YV-0245	HS-0245	N/A	Hand switch to open/close the valve to introduce instrument air stream to the offgas bypass	None

4.1.6.3 Automatic and Manual Actions

Automatic controls associated with a specific instrument. Alarms provided that are intended to trigger manual safety action.

Table 4-8 – Automatic and Manual Actions

Equipment No.	Instrument No.	Properties	Function	Remarks
HMP-BBL-00001	PI-0107	N/A	Alarm on low and high pressure indicating potential improper mixing. No automatic action.	None
HMP-BBL-00001	FI-0106	N/A	Alarm on low flow indicating potential improper mixing. No automatic action.	None
HMP-BBL-00002	PI-0111	N/A	Alarm on low and high pressure indicating potential improper mixing. No automatic action.	None
HMP-BBL-00002	FI-0110	N/A	Alarm on low flow indicating potential improper mixing. No automatic action.	None
HMP-BBL-00003	PI-0115	N/A	Alarm on low and high pressure indicating potential improper mixing. No automatic action.	None
HMP-BBL-00003	FI-0114	N/A	Alarm on low flow indicating potential improper mixing. No automatic action.	None
YV-0158	YC-0158	SS	Safety Related Post Seismic Safe Shutdown	None
YV-0159	YC-0159	SS	Safety Related Post Seismic Safe Shutdown	None
YV-0160	YC-0160	SS	Safety Related Post Seismic Safe Shutdown	None
YV-0161	YC-0161	SS	Safety Related Post Seismic Safe Shutdown	None

Equipment No.	Instrument No.	Properties	Function	Remarks
HMP-BBL-00004	PI-0119	N/A	Alarm on low and high pressure indicating potential improper mixing. No automatic action.	None
HMP-BBL-00004	FI-0118	N/A	Alarm on low flow indicating potential improper mixing. No automatic action.	None
HMP-BBL-00005	PI-0123	N/A	Alarm on low and high pressure indicating potential improper mixing. No automatic action.	None
HMP-BBL-00005	FI-0122	N/A	Alarm on low flow indicating potential improper mixing. No automatic action.	None
HMP-BBL-00016	PI-0172	N/A	Alarm on low and high pressure indicating potential improper mixing. No automatic action.	None
HMP-BBL-00016	FI-0171	N/A	Alarm on low flow indicating potential improper mixing. No automatic action.	None
HMP-BBL-00015	PI-0175	N/A	Alarm on low and high pressure indicating potential improper mixing. No automatic action.	None
HMP-BBL-00015	FI-0174	N/A	Alarm on low flow indicating potential improper mixing. No automatic action.	None
YV-0162	YC-0162	SS	Safety Related Post Seismic Safe Shutdown	None
YV-0163	YC-0163	SS	Safety Related Post Seismic Safe Shutdown	None
YV-0173	YC-0173	SS	Safety Related Post Seismic Safe Shutdown	None
YV-0176	YC-0176	SS	Safety Related Post Seismic Safe Shutdown	None
YV-0260	YC-0260	SS	Safety Related Post Seismic Safe Shutdown	None
YV-0261	YC-0261	SS	Safety Related Post Seismic Safe Shutdown	None
YV-0208	YC-0208	N/A	Non Safety Related Post Seismic Safe Shutdown	None
YV-0264	YC-0264	SS	Safety Related Post Seismic Safe Shutdown	None

Equipment No.	Instrument No.	Properties	Function	Remarks
YV-0262	YC-0262	SS	Safety Related Post Seismic Safe Shutdown	None
YV-0262	YC-0262	SS	Safety Related Post Seismic Safe Shutdown	None
HMP-WS-00049-S11C-01/2	FI-0306	N/A	Alarm on low flow indicating potential improper cooling of melter east wall. No automatic action.	None
HMP-WS-00053-S11C-01/2	FI-0316	N/A	Alarm on low flow indicating potential improper cooling of melter north wall. No automatic action.	None
HMP-WS-00078-S11C-01/2	FI-0321	N/A	Alarm on low flow indicating potential improper cooling of melter base. No automatic action.	None
HMP-WS-00048-S11C-02	TI-0352	N/A	Alarm on high temperature indicating potential improper cooling of melter cooling walls. No automatic action.	None
HMP-MLTR-00001	TI-0920	N/A	Alarm on high/low/low-low average plenum temperature indicating potential improper melter operation. Automatic feed shutdown.	None
HMP-MLTR-00001	TI-0921	N/A	Alarm on high/low average glass pool temperature indicating potential improper melter operation. No automatic action.	None
HMP-MLTR-00001	TI-0406	N/A	Alarm on high average east electrode temperature indicating potential improper melter operation. No automatic action.	None
HMP-MLTR-00001	TI-0406A/B	N/A	Alarm on high east electrode temperature indicating potential improper melter operation. No automatic action.	None
HMP-MLTR-00001	TI-0420	N/A	Alarm on high average west electrode temperature indicating potential improper melter operation. No automatic action.	None

Equipment No.	Instrument No.	Properties	Function	Remarks
HMP-MLTR-00001	TI-0420A/B	N/A	Alarm on high west electrode temperature indicating potential improper melter operation. No automatic action.	None
HMP-MLTR-00001	FI-0648	N/A	Alarm on low flow to airlift lance. No automatic action.	None
YV-0667	YC-0667	SS	Safety Related Post Seismic Safe Shutdown	None
HMP-MLTR-00001	TI-0658	N/A	Alarm on high/low/low-low average east discharge temperature indicating potential improper melter operation. No automatic action.	None
HMP-MLTR-00001	TI-0758	N/A	Alarm on high/low/low-low average east discharge temperature indicating potential improper melter operation. No automatic action.	None
HMP-MLTR-00001	TSLL-0658	N/A	Low-low average east discharge temperature indicating potential improper melter operation. Automatic safety discharge shutdown.	None
HMP-MLTR-00001	TSLL-0758	N/A	Low-low heater temperature indicating potential improper melter operation. Automatic safety discharge shutdown.	None
HMP-MLTR-00001	FI-0743	N/A	Alarm on low flow indicating potential improper airlift lance operation. No automatic action.	None
YV-0767	YC-0767	SS	Safety Related Post Seismic Safe Shutdown	None

Equipment No.	Instrument No.	Properties	Function	Remarks
HMP-MLTR-00001	LI-0816B	N/A	Alarm on high/high-high east canister level. No automatic action.	None
HMP-MLTR-00001	LSHH-0816B	N/A	High-high canister level switch. Automatic shutdown of east airlift lance operation.	None
HMP-MLTR-00001	LI-0820B	N/A	Alarm on high/high-high west canister level. No automatic action.	None
HMP-MLTR-00001	LSHH-08206B	N/A	High-high canister level switch. Automatic shutdown of west airlift lance operation.	None
HMP-MLTR-00001	PDV-0139	N/A	Post Seismic Safe Shutdown	None
YV-0164	YC-0164	SS	Safety Related Post Seismic Safe Shutdown	None
YV-0165	YC-0165	SS	Safety Related Post Seismic Safe Shutdown	None
YV-0166	YC-0166	SS	Safety Related Post Seismic Safe Shutdown	None
YV-0167	YC-0167	SS	Safety Related Post Seismic Safe Shutdown	None
YV-0168	YC-0168	SS	Safety Related Post Seismic Safe Shutdown	None
YV-0169	YC-0169	SS	Safety Related Post Seismic Safe Shutdown	None
HMP-GL-02043-S10A-001/2, HMP-GL-02011-S10A-001/2	PDI-0143	N/A	High differential pressure between cave reference and melter shell indication of possible leak. No automatic action.	None
HMP-GL-02043-S10A-001/2, HMP-GL-02011-S10A-001/2	PDI-139	N/A	High-high-high/high-high/high/low/low-low pressure differential alarm in the primary and secondary plenums.	None
HMP-GL-02043-S10A-001/2, HMP-GL-02011-S10A-001/2	PDSHH-0139	N/A	High-high differential switch on high-high pressure differential shut standby offgas valve	None
HMP-GL-02043-S10A-001/2, HMP-GL-02011-S10A-001/2	PDSHH-0139H	N/A	High-high differential switch on high-high pressure differential shut instrument air/demineralized water to standby offgas bypass	None

Equipment No.	Instrument No.	Properties	Function	Remarks
HMP-GL-02043-S10A-001/2, HMP-GL-02011-S10A-001/2	PDSLL-0139	N/A	Low-low differential switch on low-low pressure differential shut down melter feed, airlift lance, offgas cooling	None
HMP-GL-02043-S10A-001/2, HMP-GL-32375-S10A-001/2	LI-0144	N/A	High level indication between melter shell and offgas indication of possible shell leak. No automatic action.	None
HMP-GL-02014-S10A-001/2, HMP-GL-32375-S10A-001/2	LI-0131	N/A	High/high-high/low/low-low level indication between offgas and agitation bubbler indication of high melt level in melter. No automatic action.	None
HMP-GL-02014-S10A-001/2, HMP-GL-32375-S10A-001/2	LSLL-0131	N/A	Low-low level switch shut down east and west discharge on low-low melt level.	None
HMP-GL-02014-S10A-001/2, HMP-GL-32375-S10A-001/2	LSHH-0131	N/A	High-high level switch shut down melter feed on high-high melt level.	None
YV-0170	YC-0170	SS	Safety Related Post Seismic Safe Shutdown	None

4.1.6.4 Setpoint and Ranges

Refer to the appropriate operating manual for the setpoints and ranges applicable to the equipment. Alarm setpoints and process trips will be identified in a configuration data index for the HMP system currently not developed. Safety instrumented function trip setpoints will be identified in the associated Safety System Requirements Specification for the specific safety instrumented function. This section will be updated in the future when further information become available.

4.1.6.5 Interlocks, Bypasses, and Permissives

System HMP utilizes safety control system interlocks to prevent loss of containment of the high activity waste melter. Non-safety interlocks and permissives exist on major equipment to protect against accidental equipment damage, [3.9.4.1 - Bypassing of Interlocks and Permissives].

Alarm setpoints and process trips will be identified in a configuration data index for the HMP system currently not developed. Safety instrumented function trip setpoints will be identified in the associated Safety System Requirements Specification for the specific safety instrumented function. This section will be updated in the future when further information become available.

4.1.6.5.1 Safety Interlocks

Table 4-9 describes the SS Interlocks for the HMP system.

Currently the HMP safety controls are on hold for development and determination of safety controls and implementation. Safety instrumented function trip setpoints will be identified in the associated Safety System Requirements Specification for the specific safety instrumented function. This section will be updated in the future when further information become available.

Table 4-9 – Safety Interlocks

Equipment No.	Instrument No.	Properties	Function (CSR)	Remarks
HMP-MLTR-00001	YV-0664	SS	Shut off instrument air to airlift lance when Canister bogie not in place	
HMP-MLTR-00001	YV-0761	SS	Shut off instrument air to airlift lance when Canister bogie not in place	
HMP-MLTR-00002	YV-2664	SS	Shut off instrument air to airlift lance when Canister bogie not in place	
HMP-MLTR-00002	YV-2761	SS	Shut off instrument air to airlift lance when Canister bogie not in place	

4.1.6.5.2 Non-Safety Interlocks

Non-safety interlocks for the HMP system will be identified in a configuration data index for the HMP system currently not developed. This section will be updated in the future when further information become available.

4.2 Operations

RESERVED

4.2.1 Initial Configuration (Pre-Startup)

RESERVED

4.2.2 System Startup

RESERVED

4.2.3 Normal Operations

RESERVED

4.2.4 Off-Normal Operations

RESERVED

4.2.5 System Shutdown

RESERVED

4.2.6 Safety Management Programs and Administrative Controls

RESERVED

4.3 Testing and Maintenance

RESERVED

4.3.1 Temporary Configurations

RESERVED

4.3.2 TSR-Required Surveillance

RESERVED

4.3.3 Non-TSR Inspections and Testing

RESERVED

4.3.4 Maintenance

RESERVED

4.4 Supplemental Information

RESERVED

5 References and Design Documents List

5.1 Source / Basis References

Document Number	Rev	Title	Text Reference
24590-WTP-DB-ENG-01-001	002	*Basis of Design*	BOD
24590-WTP-RPT-OP-01-001	005	*Operations Requirements Document*	ORD
24590-WTP-SRD-ESH-01-001-02	07F	*Safety Requirements Document, Volume II*	SRD
24590-WTP-PSAR-ESH-01-002-04	05I	*Preliminary Documented Safety Analysis to Support Construction Authorization; HLW Facility Specific Information*	PDSA – HLW Facility
WA7890008967, Part 3	N/A	*Dangerous Waste Portion of RCRA Permit*	DWP
24590-WTP-QAM-QA-06-001	016	*Quality Assurance Manual*	QAM
24590-HLW-PL-RT-07-0001	003	*IHLW Waste Form Compliance Plan for the Hanford Tank Waste Treatment and Immobilization Plant*	IHLW
DE-AC27-01RV14136	N/A	*DOE/BNI WTP Contract Mod No. 339, Section C – Statement of Work*	WTP Contract
24590-HLW-WSF-ENG-07-005	4	*WAI Screening of HLW Glass Chemistry Processing Activities*	WAI Screening of HLW Glass Chemistry Processing Activities

5.2 Other References

Document Number	Rev	Title
24590-WTP-3DP-G04B-00004	003	*Technical Requirements Management*
24590-WTP-GPG-ENG-0161	000	*Technical Requirements Management*
24590-WTP-3DP-G04B-00046	031	*Engineering Drawings*
24590-WTP-3DP-G04B-00093	006	*System and Facility Design Descriptions*
24590-WTP-GPG-ENG-0170	006	*Impact Evaluation*
DOE-STD-3024-2011	N/A	*Content of System Design Description*
24590-101-TSA-W000-0010-407-679	00A	*95% Design Report – HLW Melter Life Report*
24590-HLW-RPT-ENS-12-002	000	*HLW Preliminary Post Accident Monitoring Report*
24590-HLW-U0D-W16T-00001	001	*HLW Room Environment Data Sheet*
24590-HLW-N1D-HMP-00001	000	*HLW – MLTR-00001 & 2 (HLW) – Corrosion Evaluation – HLW Melter 1 & 2 Gas Barrier and Cooling Panels*
24590-101-TSA-W000-0010-418-01	00A	*Report – HLW Melter Materials Selection*
24590-HLW-M6-HMP-00001001	000	*P&ID – HLW Melter Process System Melter 1 Feed and Agitation*
24590-HLW-M6-HMP-00001002	001	*P&ID – HLW Melter Process System Melter 1 Feed And Agitation*
24590-HLW-M6-HMP-20001001	000	*P&ID – HLW Melter Process System Melter 2 Feed and Agitation*
24590-HLW-M6-HMP-20001002	000	*P&ID – HLW Melter Process System Melter 2 Feed and Agitation*
24590-WTP-PL-RACT-RT-0001	000	*WTP Remotability Verification Plan*
24590-CM-HC4-EBB0-00001-04-00043	00D	*Technical Description of HLW Power Supply*
24590-CM-POA-EY00-00001	001	*Technical Description of Operations for HLW Startup Heater Power Supply*
24590-CM-POA-EY00-00002	001	*Technical Description of Operations for HLW Discharge Heater Power Supply*

Document Number	Rev	Title
24590-WTP-SDDR-E-09-00014	001	*HLW Power Supply – Technology Change (PCS500 to ACS800LC) – Applications*
24590-WTP-3PS-P000-T0001	006	*Engineering Specification for Piping Material Classes General Description and Summary*
24590-WTP-GPG-M-027	005	*Recommended Slopes for Piping Systems*
24590-WTP-M6-50-00008	003	*P&ID Symbols and Legend Sheet 8 of 8*
24590-WTP-3DP-G03B-00044	009	*Standard Component Numbering*
24590-HLW-M4C-HOP-00011	001	*HLW Melter Offgas System Design Basis Flowsheets*
24590-WTP-3PS-JQ00-T0004	001	*Engineering Specification for Management of Supplier Software*
24590-WTP-3PS-JQ00-T0005	001	*Engineering Specification for Management of Supplier Safety Software*
24590-WTP-GPP-SQP-208	03B	*Plant Software Life Cycle Management*
24590-WTP-GPG-J-015	007	*Safety Instrumented System Implementation*
DOE-STD-1020-94	N/A	*Natural Phenomena Hazards Design and Evaluation Criteria for Department of Energy Facilities*
24590-HLW-3PS-AE00-T0001	005	Engineering Specification for High Level Waste Melters
24590-HLW-M0D-HMP-00001	002	24590-HLW-ME-HMP-MLTR-00001 - High Level Waste Melter 1.
24590-HLW-M0D-HMP-00002	002	24590-HLW-ME-HMP-MLTR-00002 - High Level Waste Melter 2.
24590-HLW-M5-V17T-00002	005	Process Flow Diagram HLW Vitrification Melter 1 (System HMP and HOP).
24590-HLW-M5-V17T-20002	001	Process Flow Diagram HLW Vitrification Melter 2 (System HMP and HOP).
24590-WTP-RPT-PT-02-005	007	Flowsheet Bases, Assumptions, and Requirements.
24590-HLW-M5-V17T-00002	005	Process Flow Diagram HLW Vitrification Melter 1 (Systems HMP and HOP)
24590-CM-POA-EBB0-00004-03-00003	00B	Technical Description HLW Melter Power Supply - Control
24590-HLW-PER-J-04-0004	001	System Logic Description for High-Level Waste Facility - Melter Process (HMP) System
24590-HLW-P1-P01T-00001	009	HLW Vitrification Building General Arrangement Plan at El. -21'-0".
24590-HLW-P1-P01T-00002	007	HLW Vitrification Building General Arrangement Plan at El. 0'-0".
24590-HLW-P1-P01T-00003	008	HLW Vitrification Building General Arrangement Plan at El. 14'-0".
24590-HLW-M6-HMP-00002001	000	P&ID – HLW Melter Process System Melter 1 Film Cooler and Offgas Connection
24590-HLW-M6-HMP-00002002	000	P&ID – HLW Melter Process System Melter 1 Film Cooler and Offgas Connection
24590-HLW-M6-HMP-00003001	000	P&ID – HLW Melter 1 Refractory Cooling
24590-HLW-M6-HMP-00004001	001	P&ID – HLW Melter Process System Melter 1 Electrodes
24590-HLW-M6-HMP-00005001	000	P&ID – HLW Melter Process System Melter 1 Startup Heaters
24590-HLW-M6-HMP-00006001	001	P&ID – HLW Melter Process System Melter 1 East Discharge Heaters and Airlift
24590-HLW-M6-HMP-00006002	000	P&ID – HLW Melter Process System Melter 1 East Discharge Heaters and Airlift
24590-HLW-M6-HMP-00007001	000	P&ID – HLW Melter Process System Melter 1 West Discharge Heaters and Airlift
24590-HLW-M6-HMP-00008001	000	P&ID – HLW Melter Process System Melter 1 Glass Pour Monitoring
24590-HLW-M6-HMP-00008002	000	P&ID – HLW Melter Process System Melter 1 Glass Pour Monitoring
24590-HLW-M6-HMP-00012001	001	P&ID – HLW Melter Process System Melter 1 Film Cooler Utilities
24590-HLW-M6-HMP-00012002	001	P&ID – HLW Melter Process System Melter 1 Film Cooler Utilities
24590-HLW-M6-HMP-00013001	000	P&ID – HLW Melter Process System Melter 1 Pressure, Density, and Level Detection HMP-RK-00020
24590-HLW-M6-HMP-00013002	001	P&ID – HLW Melter Process System Melter 1 Pressure, Density, and Level Detection HMP-RK-00021
24590-HLW-M6-HMP-00013003	000	P&ID – HLW Melter Process System Melter 1 Pressure, Density, and Level Detection
24590-HLW-M6-HMP-00014001	000	P&ID – HLW Melter Process System Melter 1 Refractory Cooling
24590-HLW-M6-HMP-20002001	000	P&ID – HLW Melter Process System Melter 2 Film Cooler and Offgas Connection
24590-HLW-M6-HMP-20002002	000	P&ID – HLW Melter Process System Melter 2 Film Cooler and Offgas Connection
24590-HLW-M6-HMP-20003001	000	P&ID – HLW Melter 2 Refractory Cooling
24590-HLW-M6-HMP-20004001	000	P&ID – HLW Melter Process System Melter 2 Electrodes
24590-HLW-M6-HMP-20005001	000	P&ID – HLW Melter Process System Melter 2 Startup Heaters
24590-HLW-M6-HMP-20006001	000	P&ID – HLW Melter Process System Melter 2 East Discharge Heaters and Airlift

Document Number	Rev	Title
24590-HLW-M6-HMP-20007001	000	P&ID – HLW Melter Process System Melter 2 West Discharge Heaters and Airlift
24590-HLW-M6-HMP-20008001	000	P&ID – HLW Melter Process System Melter 2 Glass Pour Monitoring
24590-HLW-M6-HMP-20008002	000	P&ID – HLW Melter Process System Melter 2 Glass Pour Monitoring
24590-HLW-M6-HMP-20012001	001	P&ID – HLW Melter Process System Melter 2 Film Cooler Utilities
24590-HLW-M6-HMP-20012002	001	P&ID – HLW Melter Process System Melter 2 Film Cooler Utilities
24590-HLW-M6-HMP-20013001	000	P&ID – HLW Melter Process System Melter 2 Pressure, Density, and Level Detection HMP-RK-00022
24590-HLW-M6-HMP-20013002	000	P&ID – HLW Melter Process System Melter 2 Pressure, Density, and Level Detection HMP-RK-00023
24590-HLW-M6-HMP-20013003	000	P&ID – HLW Melter Process System Melter 2 Pressure, Density, and Level Detection
24590-HLW-M6-HMP-20014001	000	P&ID – HLW Melter Process System Melter 2 Refractory Cooling
24590-101-TSA-W000-0009-119-00003	00B	Final Report - High Level Waste Melter System Materials of Construction Testing
24590-101-TSA-W000-0010-407-204	00B	95% Design - Wall Module, General Equipment, Jackbolt Actuators
24590-101-TSA-W000-0010-407-431	N/A	90% Design - HLW Dam-Trough Thermal Stress
24590-101-TSA-W000-0010-407-1158	00A	HLW Sequence of Operations
24590-101-TSA-W000-0010-407-566	N/A	90% Design - HLW Melter System Description
24590-CM-POA-EBB0-00004-03-00003	00B	Technical Description - HLW Melter Power Supply - Control
24590-QL-HC4-W000-00011-04-00075	00B	Drawing – Seismic Lug Installation
24590-QL-HC4-W000-00011-04-00097	00B	Drawing - HLW Melter Assembly
24590-QL-HC4-W000-00011-04-00098	00B	Drawing - HLW Melter Assembly
24590-QL-HC4-W000-00011-04-00103	00B	Drawing - HLW Melter Assembly
24590-QL-HC4-W000-00011-04-00130	00B	HLW Melter Final Assembly Sequence 6
24590-QL-HC4-W000-00011-04-00135	00A	Lid Components – Feed Nozzle Assembly
24590-QL-HC4-W000-00011-04-00138	00C	Drawing - Lid Components - Standby Offgas Spool Piece
24590-QL-HC4-W000-00011-04-00247	00A	HLW ADS Pump Installation
24590-QL-HC4-W000-00011-04-00385	00A	East Electrode Assembly
24590-QL-HC4-W000-00011-04-00422	00A	Lid Components – Glass Bubbler Assembly
24590-QL-HC4-W000-00011-04-00428	00A	Lid Components – Level Detector Assembly
24590-QL-HC4-W000-00011-04-00516	00A	HLW Melter Final Assembly Sequence Section 2
24590-QL-HC4-W000-00011-04-00560	00A	Drawing - Pour Spout Installation
24590-HLW-M6C-PCW-00001	000	HLW Plant Cooling Water System Melter Loop Pipe Line Sizing and Head Loss Calculation

5.3 System Design Documents

Document Number	Title
Process Flow Diagrams	
24590-HLW-M5-V17T-00002	Process Flow Diagram HLW Vitrification Melter 1 (Systems HMP and HOP)
24590-HLW-M5-V17T-20002	Process Flow Diagram HLW Vitrification Melter 2 (Systems HMP and HOP)
P&IDs	
24590-HLW-M6-HMP-00001001	HLW Melter Process System Melter 1 Feed and Agitation
24590-HLW-M6-HMP-00001002	HLW Melter Process System Melter 1 Feed and Agitation
24590-HLW-M6-HMP-00002001	HLW Melter Process System Melter 1 Film Cooler and Offgas Connection
24590-HLW-M6-HMP-00002002	HLW Melter Process System Melter 1 Film Cooler and Offgas Connection
24590-HLW-M6-HMP-00003001	HLW Melter 1 Refractory Cooling
24590-HLW-M6-HMP-00004001	HLW Melter Process System Melter 1 Electrodes
24590-HLW-M6-HMP-00005001	HLW Melter Process System Melter 1 Startup Heaters
24590-HLW-M6-HMP-00006001	HLW Melter Process System Melter 1 East Discharge Heaters and Airlift
24590-HLW-M6-HMP-00006002	HLW Melter Process System Melter 1 East Discharge Heaters and Airlift
24590-HLW-M6-HMP-00007001	HLW Melter Process System Melter 1 West Discharge Heaters and Airlift
24590-HLW-M6-HMP-00008001	HLW Melter Process System Melter 1 Glass Pour Monitoring
24590-HLW-M6-HMP-00008002	HLW Melter Process System Melter 1 Glass Pour Monitoring
24590-HLW-M6-HMP-00012001	HLW Melter Process System Melter 1 Film Cooler Utilities
24590-HLW-M6-HMP-00012002	HLW Melter Process System Melter 1 Film Cooler Utilities
24590-HLW-M6-HMP-00013001	HLW Melter Process System Melter 1 Pressure, Density and Level Detection HMP-RK-00020
24590-HLW-M6-HMP-00013002	HLW Melter Process System Melter 1 Pressure, Density and Level Detection HMP-RK-00021
24590-HLW-M6-HMP-00013003	HLW Melter Process System Melter 1 Pressure, Density and Level Detection
24590-HLW-M6-HMP-00014001	HLW Melter Process System Melter 1 Refractory Cooling
24590-HLW-M6-HMP-20001001	HLW Melter Process System Melter 2 Feed and Agitation
24590-HLW-M6-HMP-20001002	HLW Melter Process System Melter 2 Feed and Agitation
24590-HLW-M6-HMP-20002001	HLW Melter Process System Melter 2 Film Cooler and Offgas Connection
24590-HLW-M6-HMP-20002002	HLW Melter Process System Melter 2 Film Cooler and Offgas Connection
24590-HLW-M6-HMP-20003001	HLW Melter 2 Refractory Cooling
24590-HLW-M6-HMP-20004001	HLW Melter Process System Melter 2 Electrodes
24590-HLW-M6-HMP-20005001	HLW Melter Process System Melter 2 Startup Heaters
24590-HLW-M6-HMP-20006001	HLW Melter Process System Melter 2 East Discharge Heaters and Airlift
24590-HLW-M6-HMP-20007001	HLW Melter Process System Melter 2 West Discharge Heaters and Airlift
24590-HLW-M6-HMP-20008001	HLW Melter Process System Melter 2 Glass Pour Monitoring
24590-HLW-M6-HMP-20008002	HLW Melter Process System Melter 2 Glass Pour Monitoring
24590-HLW-M6-HMP-20012001	HLW Melter Process System Melter 2 Film Cooler Utilities
24590-HLW-M6-HMP-20012002	HLW Melter Process System Melter 2 Film Cooler Utilities
24590-HLW-M6-HMP-20013001	HLW Melter Process System Melter 2 Pressure, Density and Level Detection HMP-RK-00022
24590-HLW-M6-HMP-20013002	HLW Melter Process System Melter 2 Pressure, Density and Level Detection HMP-RK-00023
24590-HLW-M6-HMP-20013003	HLW Melter Process System Melter 2 Pressure, Density and Level Detection
24590-HLW-M6-HMP-20014001	HLW Melter Process System Melter 2 Refractory Cooling
24590-HLW-M6-HMP-P0001	HLW Melter 1 System Feed and Agitation
24590-HLW-M6-HMP-P0002	HLW Melter 1 System Film Cooler and Offgas Connection
24590-HLW-M6-HMP-P0003	HLW Melter Process System HLW Melter 1 Cooling System
24590-HLW-M6-HMP-P0004	HLW Melter 1 Electrode Air Cooling and Joule Heating
24590-HLW-M6-HMP-P0006	HLW Melter 1 System East Discharge Heaters and Airlift
24590-HLW-M6-HMP-P0007	HLW Melter 1 System West Discharge Heaters and Airlift

Document Number	Title
24590-HLW-M6-HMP-P0008	HLW Melter Process System Melter 1 Glass Pour & Monitoring Instrumentation
24590-HLW-M6-HMP-P0013	HLW Melter 1 System Pressure, Density and Level Detection
24590-HLW-M6-HMP-P0014	HLW Melter Process System HLW Melter 1 Cooling System
24590-HLW-M6-HMP-P20001	HLW Melter 2 System Feed and Agitation
24590-HLW-M6-HMP-P20002	HLW Melter 2 System Film Cooler and Offgas Connection
24590-HLW-M6-HMP-P20003	HLW Melter Process System HLW Melter 2 Cooling System
24590-HLW-M6-HMP-P20004	HLW Melter 2 Electrode Air Cooling and Joule Heating
24590-HLW-M6-HMP-P20006	HLW Melter 2 System East Discharge Heaters and Airlift
24590-HLW-M6-HMP-P20007	HLW Melter 2 System West Discharge Heaters and Airlift
24590-HLW-M6-HMP-P20008	HLW Melter Process System Melter 2 Glass Pour & Monitoring Instrumentation
24590-HLW-M6-HMP-P20013	HLW Melter 2 System Pressure, Density and Level Detection
24590-HLW-M6-HMP-P20014	HLW Melter Process System HLW Melter 2 Cooling System
24590-HLW-M6-PCW-00003001	HLW Plant Cooling Water System Cooling Water Monitoring Room Melter 1 and HDH
24590-HLW-M6-PCW-00003002	HLW Plant Cooling Water System Melters 1 and 2 Output Transformers
24590-HLW-M6-PCW-00003003	HLW Cooling Water System MVE-PSUP-30001
24590-HLW-M6-PCW-00003004	HLW Plant Cooling Water System MVE-PSUP-30003
24590-HLW-M6-PCW-00004001	HLW Plant Cooling Water System Cooling Water Monitoring Room Melter 2
General Arrangement / Equipment Location Drawings	
24590-HLW-P1-P01T-00001	HLW Vitrification Building General Arrangement Plan at EL -21'-0"
24590-HLW-P1-P01T-00002	HLW Vitrification Building General Arrangement Plan at EL 0'-0"
24590-HLW-P1-P01T-00003	HLW Vitrification Building General Arrangement Plan at EL 14'-0"
24590-HLW-P1-P01T-00009	HLW Vitrification Building General Arrangement Sections D-D, E-E & F-F
24590-HLW-P1-P23T-00109	HLW Vitrification Building Equipment Location Plan EL 0'-0" / Area 109
24590-HLW-P1-P23T-00114	HLW Vitrification Building Equipment Location Plan EL 0'-0" / Area 114
24590-HLW-P1-P23T-00115	HLW Vitrification Building Equipment Location Plan EL 0'-0" / Area 115
24590-HLW-P1-P23T-00110	HLW Vitrification Building Equipment Location Plan EL 0'-0" / Area 110
24590-HLW-P1-P23T-00209	HLW Vitrification Building Equipment Location Plan EL 14'-0" / Area 209
24590-HLW-P1-P23T-00214	HLW Vitrification Building Equipment Location Plan EL 14'-0" / Area 214
24590-HLW-P1-P23T-00210	HLW Vitrification Building Equipment Location Plan EL 14'-0" / Area 210
24590-HLW-P1-P23T-00215	HLW Vitrification Building Equipment Location Plan EL 14'-0" / Area 215

Appendix A - Test Objectives, Conditions, and Acceptance Criteria

NOTE: Demonstrations and Tests identified in this appendix are preliminary, pending completion of design activities. They are established to document the flowdown of verification needs established in Section 3 but are not sufficiently detailed for development of specific system and equipment test plans. They may be used for general planning only. This note is to be removed when design is sufficiently progressed to provide the details needed to establish the basis for testing and acceptance criteria.

Requirement (para #)	Test (T) or Demo (D)	SU or COM	Plan (including SSCs)	Acceptance Criteria (TAC or GTC)*	Notes/Comments	Test Conditions
3.4.1.1	T	SU/COM	Perform an integrated test to verify the combined glass output for both HLW melter systems (CTNs, HMP-MLTR-00001, HMP-MLTR-00002) can produce 3.6 MTG/day during cold commissioning over a 20 day period.	(**GTC**) Combined glass output for both HLW melter systems output 3.6 MTG/day over a 20 day period.	This test is based on WTP Contract Section C, Standard 5	Performed with ORP approved simulant. Support systems required for demonstration are as follows and shall be online and operable: C5V, DIW, HFP, HMH, HOP, HPH, HSH, ISA, LVE, MVE, PCW, PCJ, PPJ and any test conditions outlined in the *WTP Commissioning Plan*, 24590-WTP-PL-OP-05-0002. During Cold Commissioning
3.4.1.1	T	SU/COM	Perform an integrated test to verify the combined output for the HLW melter system (CTNs, HMP-MLTR-00001, HMP-MLTR-00002) can produce a minimum of 3.6 MTG/day during hot commissioning over a 20 day period.	(**GTC**) Combined glass output for both HLW melter systems output 3.6 MTG/day over a 20 day period.	This test is based on WTP Contract Section C, Standard 5	Support systems required for demonstration are as follows and shall be online and operable: C5V, DIW, HFP, HMH, HOP, HPH, HSH, ISA, LVE, MVE, PCW, PCJ, PPJ and any test conditions outlined in the *WTP Commissioning Plan*, 24590-WTP-PL-OP-05-0002. During Hot Commissioning
3.4.4.1 3.5.4.4	D	SU/COM	Demonstrate melter consumable components change out per the Remote Handling work group per 24590-WTP-PL-RACT-RT-0001, *WTP Remotability Verification Plan*. Demonstration shall include bubbler and level assembly change out.	(**GTC**) Successful remote removal and re-installation of the all the HMP equipment/ components listed in the test plans.	Physical demonstration	Pre-Hot Commissioning HSH operating
3.5.1.1.2	T	SU/COM	Perform a test verifying that the HLW melters (CTNs: HMP-MLTR-00001, HMP-MLTR-00002) melt pool can be maintained between 1100°C and 1200°C with a target setpoint of 1150°C.	(**GTC**) Glass pool average temperature can be maintained at the target setpoint of 1150°C ± 50°C over a 4 hour period of time.	Demonstration should be performed during steady state operation.	Performed with ORP approved simulant. Support systems required for testing are as follows and shall be online and operable: C5V, DIW, HFP, HMH, HOP, HPH, HSH, ISA, LVE, MVE, PCW, PCJ, PPJ and any test conditions outlined in the *WTP Commissioning Plan*, 24590-WTP-PL-OP-05-0002. During Cold Commissioning

Requirement (para #)	Test (T) or Demo (D)	SU or COM	Plan (including SSCs)	Acceptance Criteria (TAC or GTC)*	Notes/Comments	Test Conditions
3.9.1.7.2	T	SU/COM	Perform an integrated test verifying the plenum temperatures within each melter (HMP-MLTR-00001, HMP-MLTR-00002) can be monitored and plenum temperatures can be maintained between (temperature range **TBD**) during slurry feed by changing the feed rate to the melters automatically / in auto mode. This shall be performed from the facility control room through the PCJ system. Plenum temperature is measured by four thermocouples that are averaged to provide a plenum temperature. Melter 1 thermocouples at 62": CTNs, (TE-0920A, TT-0920A, TI-0920A), (TE-0920C, TT-0921A, TI-0921F) Melter 1 thermocouples at 59": CTNs, (TE-0920B, TT-0920A, TI-0920B), (TE-0920D, TT-0921A, TI-0921E) Melter 2 thermocouples at 62": CTNs, (TE-2920A, TT-2920A, TI-2920A), (TE-2920C, TT-2921A, TI-2920C) Melter 2 thermocouples at 59": CTNs, (TE-2920B, TT-2920A, TI-2920B), (TE-2920D, TT-2921A, TI-2920D)	**(GTC)** Plenum temperature can be controlled and maintained between (temperature range **TBD**) during steady state processing by adjusting the feed rate in auto mode over a 4 hour period of time.	Demonstration should be performed during steady state operation.	Performed with ORP approved simulant. Support systems required for demonstration are as follows and shall be online and operable: C5V, DIW, HFP, HMH, HOP, HPH, HSH, ISA, LVE, MVE, PCW, PCJ, PPJ and any test conditions outlined in the *WTP Commissioning Plan*, 24590-WTP-PL-OP-05-0002. During Cold Commissioning
3.4.1.7	D	SU/COM	Demonstrate containment of molten glass is maintained within the HLW melters (CTNs: HMP-MLTR-00001, HMP-MLTR-00002).	**(GTC)** Containment of molten glass is maintained during initial heat up and at operating temperatures.		Performed with ORP approved simulant. Support systems required for demonstration are as follows and shall be online and operable: C5V, DIW, HFP, HMH, HOP, HPH, HSH, ISA, LVE, MVE, PCW, PCJ, PPJ and any test conditions outlined in the *WTP Commissioning Plan*, 24590-WTP-PL-OP-05-0002. During Cold Commissioning
3.5.2.1.1	T	SU/COM	Perform an integrated test to verify the melter plenum pressure can be monitored and maintained from the PCJ system from the facility control room at a nominal (**TBD**) in WC with respect to the melter cave with air in-leakage from the melter cave. Pressure Indicators CTNs: Melter 1, HMP-PDI-0139A, HMP-PDI-0139B Melter 2, HMP-PDI-2139A, HMP-PDI-2139B	**(GTC)** Melter plenum pressure is maintained at a nominal (**TBD**) in WC relative to the melter cave with air in-leakage from melter cave over a 4 hour period.	Air in-leakage must be within (**TBD**) limits to assure offgas confinement in melters.	Performed with ORP approved simulant. Support systems required for testing are as follows and shall be online and operable: C5V, DIW, HFP, HMH, HOP, HPH, HSH, ISA, LVE, MVE, PCW, PCJ, PPJ and any test conditions outlined in the *WTP Commissioning Plan*, 24590-WTP-PL-OP-05-0002. During Cold Commissioning

Requirement (para #)	Test (T) or Demo (D)	SU or COM	Plan (including SSCs)	Acceptance Criteria (TAC or GTC)*	Notes/Comments	Test Conditions
3.5.4.2	D	SU/COM	Demonstrate a leak between the cooling panels and melter shell by simulating a leak in the cooling panels PCW and verify leak detection functionality. Simulate a signal and verify the system responds appropriately. Shell Leak Detection CTN: Melter 1, HMP-PDI-0139A Melter 2, HMP-PDI-2139A Between the cooling panels and the melter shell is a leak detection device which monitors backpressure of a small airflow to provide indication of cooling water leakage.	**(GTC)** Leak detection devices function as designed.	This demonstration can be performed before actual startup of melter.	Performed with ORP approved simulant. During Cold Commissioning Support systems required for demonstration are as follows and shall be online and operable: ISA, PCJ and any test conditions outlined in the *WTP Commissioning Plan*, 24590-WTP-PL-OP-05-0002.
3.6.1.3 3.9.1.7.5	D	SU/COM	Demonstration is only required to be performed on one discharge chamber to verify functionality. Demonstrate that the flow rate of glass discharge can be controlled by altering the rate at which ISA and argon is injected into the bottom of the riser to support throughput rates. This shall be accomplished from the facility control room using remote operations. Control Valve CTNs: Melter 1 East Discharge Air Lift: HMP-YC-0664 Melter 1 West Discharge Air Lift: HMP-YC-0761 Melter 2 East Discharge Air Lift: HMP-YC-2664 Melter 2 West Discharge Air Lift: HMP-YC-2761	**(GTC)** Glass discharge can be controlled by altering the rate at which ISA and argon is injected into the bottom of the airlift riser using remote operations.	This demonstration is only required to be performed on one of the discharge chambers to prove out functionality of airlift controls.	Performed with ORP approved simulant. Support systems required for demonstration are as follows and shall be online and operable: C5V, DIW, HFP, HMH, HOP, HPH, HSH, ISA, LVE, MVE, PCW, PCJ, PPJ and any test conditions outlined in the *WTP Commissioning Plan*, 24590-WTP-PL-OP-05-0002. During Cold Commissioning
3.7.1.3	D	SU/COM	Demonstrate that the startup heaters can melt the starter charge frit sufficiently to provide a conductive path between the joule-heating electrodes. Startup Heater CTNs: Melter 1: HMP-HTR-00001, HMP-HTR-00002, HMP-HTR-00003, HMP-HTR-00004, HMP-HTR-00005 Melter 2: HMP-HTR-00008, HMP-HTR-00009, HMP-HTR-00010, HMP-HTR-00011, HMP-HTR-00012	**(GTC)** A conductive path between the joule-heating electrodes is established.	This demonstration will be done with starter frit only in the glass pool.	Support systems required for demonstration are as follows and shall be online and operable: C5V, DIW, HFP, HMH, HOP, HPH, HSH, ISA, LVE, MVE, PCW, PCJ, PPJ and any test conditions outlined in the *WTP Commissioning Plan*, 24590-WTP-PL-OP-05-0002. During Cold Commissioning

Requirement (para #)	Test (T) or Demo (D)	SU or COM	Plan (including SSCs)	Acceptance Criteria (TAC or GTC)*	Notes/Comments	Test Conditions
3.7.2.1	T	SU/COM	Perform a test verifying that the melter electrode power supplies remain ungrounded during normal operating conditions. Verification may be established by monitoring the electrode power supplies ground fault. Melter Electrode Power Supply CTNs: Melter 1: MVE-PSUP-30001 Melter 2: MVE-PSUP-30003	**(GTC)** Melter electrode power supplies remain ungrounded during normal operating conditions.	This demonstration will be done with frit only in the glass pool.	Performed with ORP approved simulant. Support systems required for demonstration are as follows and shall be online and operable: C5V, DIW, HFP, HMH, HOP, HPH, HSH, ISA, LVE, MVE, PCW, PCJ, PPJ and any test conditions outlined in the *WTP Commissioning Plan*, 24590-WTP-PL-OP-05-0002. During Cold Commissioning
3.7.3.4	D	SU/COM	Demonstrate forced air by the ISA system can sufficiently cool the electrodes and electrode extensions while operating at a nominal melter temperature. The melter electrode and electrode extension exhaust air shall be below (**TBD**) and be monitored by the PCJ system. Electrodes and Electrode Extensions Cooling Air Exhaust Temperature Element CTNs: Melter 1: HMP-TE-0406A, HMP-TE-0406B, HMP-TE-0406C, HMP-TE-0406D, HMP-TE-0406E, HMP-TE-0420A, HMP-TE-0420B, HMP-TE-0420C, HMP-TE-0420D, HMP-TE-0420E. Melter 2: HMP-TE-2406A, HMP-TE-2406B, HMP-TE-2406C, HMP-TE-2406D, HMP-TE-2406E, HMP-TE-2420A, HMP-TE-2420B, HMP-TE-2420C, HMP-TE-2420D, HMP-TE-2420E.	**(GTC)** Melter containment is maintained. Melter electrode and electrode extension exhaust air is maintained below (**TBD**).	This demonstration will be done with frit only in the glass pool.	Performed with ORP approved simulant. Support systems required for demonstration are as follows and shall be online and operable: C5V, DIW, HFP, HMH, HOP, HPH, HSH, ISA, LVE, MVE, PCW, PCJ, PPJ and any test conditions outlined in the *WTP Commissioning Plan*, 24590-WTP-PL-OP-05-0002. During Cold Commissioning
3.9.1.1	D	SU/COM	Demonstrate HLW melter glass pool temperature elements, individually and by an average block for the glass pool temperature, can be monitored and automatically controlled by the PCJ system in the facility control room during normal operating conditions. Glass pool temperature element CTNs: Melter 1: HMP-TE-0921A, 0921B, 0921C, 0921D, 0921E, and 0921F Melter 2: HMP-TE-2921A, 2921B, 2921C, 2921D, 2921E, and 2921F	(**GTC**) Glass pool temperature elements can be monitored individually and by an average block and glass pool temperature can be automatically controlled by the PCJ system.		Performed with ORP approved simulant. Support systems required for demonstration are as follows and shall be online and operable: C5V, DIW, HFP, HMH, HOP, HPH, HSH, ISA, LVE, MVE, PCW, PCJ, PPJ and any test conditions outlined in the *WTP Commissioning Plan*, 24590-WTP-PL-OP-05-0002. During Cold Commissioning

Requirement (para #)	Test (T) or Demo (D)	SU or COM	Plan (including SSCs)	Acceptance Criteria (TAC or GTC)*	Notes/Comments	Test Conditions
3.9.1.2	D	SU/COM	Demonstrate the capability to monitor and record the HLW melters refractory temperatures during operations from the PCJ system from the facility control room. Melter refractory temperature element CTNs: Melter 1: HMP-TE-0337, 0338, 0339, 0340, 0341, 0342, 0343, 0344, 0345, and 0346. Melter 2: HMP-TE-2337, 2338, 2339, 2340, 2341, 2342, 2343, 2344, 2345, and 2346.	**(GTC)** Melter refractory temperature can be monitored and recorded.		Performed with ORP approved simulant. Support systems required for demonstration are as follows and shall be online and operable: C5V, DIW, HFP, HMH, HOP, HPH, HSH, ISA, LVE, MVE, PCW, PCJ, PPJ and any test conditions outlined in the *WTP Commissioning Plan*, 24590-WTP-PL-OP-05-0002. During Cold Commissioning
3.9.1.3	D	SU/COM	Demonstrate the capability to monitor and record the HLW melters cooling water flow and temperature and interface with the PCJ system to remotely monitor and record. Melter cooling water flow transmitters CTNs: Melter 1: HMP-FT-0306, 0316, 0321, 0326, 0336, cooling panel supply PCW Melter 2: HMP-FT-2306, 2316, 2321, 2326, 2336, cooling panel supply PCW Melter cooling water temperature element CTNs: Melter 1: HMP-TE-0352, cooling panel return PCW Melter 2: HMP-TE-2352, cooling panel return PCW	**(GTC)** Cooling water flow and temperature can be monitored and recorded.		Performed with ORP approved simulant. Support systems required for demonstration are as follows and shall be online and operable: C5V, DIW, HFP, HMH, HOP, HPH, HSH, ISA, LVE, MVE, PCW, PCJ, PPJ and any test conditions outlined in the *WTP Commissioning Plan*, 24590-WTP-PL-OP-05-0002. During Cold Commissioning
3.9.1.4	D	SU/COM	Demonstrate the placement of the pour spout cameras can effectively be used to monitor glass pouring through the PTJ system. Melter pour spout camera CTNs: Melter 1 East pour spout camera: HMP-XT-3149 Melter 1 West pour spout camera: HMP-XT-3150 Melter 2 East pour spout camera: HMP-XT-3186 Melter 2 West pour spout camera: HMP-XT-3187	**(GTC)** CCTV can effectively monitor glass pouring.		Performed with ORP approved simulant. Support systems required for demonstration are as follows and shall be online and operable: C5V, DIW, HFP, HMH, HOP, HPH, HSH, ISA, LVE, MVE, PCW, PCJ, PTJ, PPJ and any test conditions outlined in the *WTP Commissioning Plan*, 24590-WTP-PL-OP-05-0002. During Cold Commissioning

Requirement (para #)	Test (T) or Demo (D)	SU or COM	Plan (including SSCs)	Acceptance Criteria (TAC or GTC)*	Notes/Comments	Test Conditions
3.9.1.7.1	D	SU/COM	Demonstrate that the plenum pressure can be monitored during operations from the facility control room. Pressure Indicators CTNs: Melter 1, HMP-PDI-0139A, HMP-PDI-0139B Melter 2, HMP-PDI-2139A, HMP-PDI-2139B	**(GTC)** Melter plenum pressure can be monitored.		Performed with ORP approved simulant. Support systems required for demonstration are as follows and shall be online and operable: C5V, DIW, HFP, HMH, HOP, HPH, HSH, ISA, LVE, MVE, PCW, PCJ, PPJ and any test conditions outlined in the *WTP Commissioning Plan*, 24590-WTP-PL-OP-05-0002.
3.9.1.7.3	D	SU/COM	Demonstrate the capability to monitor the glass pool level and density during operations from the facility control room. Melter 1 glass pool density transmitter CTN: HMP-DT-0132 Melter 2 glass pool density transmitter CTN: HMP-DT-2132 Melter 1 glass pool level transmitter CTN: HMP-LT-0131 Melter 2 glass pool level transmitter CTN: HMP-LT-2131	**(GTC)** Glass pool level and density can be monitored.		Performed with ORP approved simulant. Support systems required for demonstration are as follows and shall be online and operable: C5V, DIW, HFP, HMH, HOP, HPH, HSH, ISA, LVE, MVE, PCW, PCJ, PPJ and any test conditions outlined in the *WTP Commissioning Plan*, 24590-WTP-PL-OP-05-0002. During Cold Commissioning
3.9.1.7.4	D	SU/COM	Demonstrate by use of the IR camera, operator can control the fill height of canisters during pours. Melter 1 East canister level indication CTN: HMP-LI-0820A or HMP-LI-0820B Melter 1 West canister level indication CTN: HMP-LI-0816A or HMP-LI-0816B Melter 2 East canister level indication CTN: HMP-LI-2820A or HMP-LI-2820B Melter 2 West canister level indication CTN: HMP-LI-2816A or HMP-LI-2816B	**(GTC)** Level detection for canister has sufficient accuracy to control fill height.		Performed with ORP approved simulant. Support systems required for demonstration are as follows and shall be online and operable: C5V, DIW, HFP, HMH, HOP, HPH, HSH, ISA, LVE, MVE, PCW, PCJ, PPJ and any test conditions outlined in the *WTP Commissioning Plan*, 24590-WTP-PL-OP-05-0002. During Cold Commissioning

Requirement (para #)	Test (T) or Demo (D)	SU or COM	Plan (including SSCs)	Acceptance Criteria (TAC or GTC)*	Notes/Comments	Test Conditions
3.9.2.1	D	SU/COM	Demonstrate the HMP system response on a seismic shutdown signal from the PPJ system. Shutdown signal shall automatically activate melter service line interlocks for closure of isolation valves for service piping directly connected to the melters. Melter 1 West discharge airlift control valve CTN: HMP-YV-0767, fail closed Melter 1 West discharge airlift ISA control valve CTN: HMP-YV-0761, fail closed Melter 1 East discharge airlift control valve CTN: HMP-YV-0667, fail closed Melter 1 East discharge airlift ISA control valve CTN: HMP-YV-0664, fail closed Melter 1 offgas air injection control valve CTNs: HMP-YV-0260, HMP-YV-0233, fail closed Melter 1 film cooler air injection control valve CTNs: HMP-YV-0261, HMP-YV-0234, fail closed Melter 1 ISA air cooling Standby/SBS bypass control valve CTNs: HMP-YV-0232, HMP-YV-0264, HMP-YV-0245, fail closed Melter 1 DIW intermittent standby/SBS bypass control valve CTN: HMP-YV-0208, fail closed Melter 1 DIW pre feed cooling Nozzle control valve CTN: HMP-YV-0170, fail closed Melter 1 ISA for pressure, level, and density control valves CTNs: HMP-YV-0164, HMP-YV-0165, HMP-YV-0166, HMP-YV-0167, HMP-YV-0168, HMP-YV-0169, all fail closed Melter 1 DIW pre feed cooling plenum control valve CTN: HMP-YV-0158, fail closed Melter 1 ISA supply for bubblers control valves CTNs: HMP-YV-0159, HMP-YV-0160, HMP-YV-0161, HMP-YV-0162, HMP-YV-0163, HMP-YV-0173, HMP-YV-0176, all fail closed Melter 1 DIW supply to HOP-MISTR-00013 control valve CTN: HMP-YV-0262, fail closed Melter 1 ISA supply to HOP-MISTR-00013 control valve CTN: HMP-YV-0263, fail closed Melter 2 West discharge airlift control valve CTN: HMP-YV-2767, fail closed Melter 2 West discharge airlift ISA control valve CTN: HMP-YV-2761, fail closed Melter 2 East discharge airlift control valve CTN: HMP-YV-2667, fail closed Melter 2 East discharge airlift ISA control valve CTN: HMP-YV-2664, fail closed Melter 2 offgas air injection control valve CTNs: HMP-YV-2260, HMP-YV-2233, fail closed Melter 2 film cooler air injection control valve CTNs: HMP-YV-2261, HMP-YV-2234, fail closed Melter 2 ISA air cooling Standby/SBS bypass control valve CTNs: HMP-YV-2232, HMP-YV-2264, HMP-YV-2245, fail closed Melter 2 DIW intermittent standby/SBS bypass control valve CTN: HMP-YV-2208, fail closed Melter 2 DIW pre feed cooling Nozzle control valve CTN: HMP-YV-2170, fail closed Melter 2 ISA for pressure, level, and density control valves CTNs: HMP-YV-2164, HMP-YV-2165, HMP-YV-2166, This demonstration will be done with frit only in the glass pool HMP-YV-2167, HMP-YV-2168, HMP-YV-2169, all fail closed Melter 2 DIW pre feed cooling plenum control valve CTN: HMP-YV-2158, fail closed Melter 2 ISA supply for bubblers control valves CTNs: HMP-YV-2159, HMP-YV-2160, HMP-YV-2161, HMP-YV-2162, HMP-YV-2163, HMP-YV-2173, HMP-YV-2176, all fail closed Melter 2 DIW supply to HOP-MISTR-00013 control valve CTN: HMP-YV-2262, fail closed Melter 2 ISA supply to HOP-MISTR-00013 control valve CTN: HMP-YV-2263, fail closed	**(TAC)** Isolation valves close automatically on service piping to the melters.		Performed with ORP approved simulant. Support systems required for demonstration are as follows and shall be online and operable: C5V, DIW, HFP, HMH, HOP, HPH, HSH, ISA, LVE, MVE, PCW, PCJ, PPJ and any test conditions outlined in the *WTP Commissioning Plan*, 24590-WTP-PL-OP-05-0002. During Cold Commissioning

Requirement (para #)	Test (T) or Demo (D)	SU or COM	Plan (including SSCs)	Acceptance Criteria (TAC or GTC)*	Notes/Comments	Test Conditions
3.9.2.2	T	SU/COM	[**HOLD**] Perform an integrated test to verify the melter feed will automatically terminate by simulating signal for pressure (**TBD** setpoint) over a (**TBD**) period of time in the melter plenum while interfacing with the PPJ system to initiate the safety interlock to stop feed. ADS Pumps - CTNs: HFP-PMP-00001, -00002, -000014, and -00015. HMP Pressure Sensors - CTNs: PDT-0139A, PDT-0139B, PDT-2139A, and PDT-2139B	(**TAC**) The ADS pumps shutdown operation upon receipt of a (**TBD**) melter plenum pressure signal from the PPJ for a period of time (**TBD**).		Performed with ORP approved simulant. Support systems required for demonstration are as follows and shall be online and operable: C5V, DIW, HFP, HMH, HOP, HPH, HSH, ISA, LVE, MVE, PCW, PCJ, PPJ and any test conditions outlined in the *WTP Commissioning Plan*, 24590-WTP-PL-OP-05-0002. During Cold Commissioning
3.9.2.3	D	SU/COM	[**HOLD**] Demonstrate the capability to control and monitor the melter plenum dilution air. Demonstrate when low airflow setpoint (**TBD**) over time (**TBD**) is detected, the PPJ system will interlock the ADS pumps air supply to terminate melter feed. This is currently not in the design.	(**TAC**) Air to ADS pumps is interlocked closed and terminates melter feed upon reaching the low airflow setpoint (**TBD**) within (**TBD**) time.		Performed with ORP approved simulant. Support systems required for demonstration are as follows and shall be online and operable: C5V, DIW, HFP, HMH, HOP, HPH, HSH, ISA, LVE, MVE, PCW, PCJ, PPJ and any test conditions outlined in the *WTP Commissioning Plan*, 24590-WTP-PL-OP-05-0002. During Cold Commissioning
3.9.2.4	D	SU/COM	Demonstrate HMP melter airlift controls for glass pours interlocks the HPH bogie drive using the PPJ system once pour has been completed preventing movement of the bogie in the pour tunnel until canister has sufficiently cooled based on a wait time. Melter 1 airlift control valves CTNs: HMP-YV-0664, HMP-YV-0761 Melter 2 airlift control valves CTNs: HMP-YV-2664, HMP-YV-2761	(**TAC**) At completion of pour, bogie is interlocked stopped until sufficiently cooled.		Performed with ORP approved simulant. Support systems required for demonstration are as follows and shall be online and operable: C5V, DIW, HFP, HMH, HOP, HPH, HSH, ISA, LVE, MVE, PCW, PCJ, PPJ and any test conditions outlined in the *WTP Commissioning Plan*, 24590-WTP-PL-OP-05-0002. During Cold Commissioning

3.9.4.2	D	SU/COM	Demonstrate the PCJ remote monitoring and control operations for all the listed HMP equipment/components on both melter lines. **Melter:** • The design shall have the capability to remotely monitor and/or control: o Monitor and automatically control flow of air to the bubblers o Monitor pressure of air to the bubblers o Monitor flow of supply cooling water to the cooling panels o Monitor temperature of return cooling water from the cooling panels o Monitor temperature of refractory thermocouples o Monitor and automatically control of air flow to the electrodes and electrode extensions. o Monitor and automatically control temperature of the electrodes o Monitor individual electrode temperature indicators, will alarm on high rate of change and on differential from the average electrode temperature o Monitor joule heating power supply output voltage, current power, and fault diagnostics o Monitor plenum temperature indicators, the individual temperature indicators will alarm on high alarm on differential from the average plenum temperature o Manually adjust rate of feed based on melter plenum temperature. o Monitor individual glass pool temperature indicators, will alarm on high rate of change and on differential from the average glass pool temperature o Monitor and automatically control glass pool temperature by adjusting power to the electrode power supply o Monitor and automatically control startup heaters power and temperature o Monitor and manually control air flow and argon flow for airlifts to the discharge chamber o Monitor argon pressure for airlifts o Monitor argon pressure at skid HMP-SKID-00003 o Monitor and automatically control discharge heater temperatures o Monitor glass pool level. o Monitor glass pool density. o Monitor flow and pressure for air flow to the SBS bypass offgas line o Monitor flow and pressure for air flow to frit funnel startup o Monitor air flow to the film cooler o Monitor DIW flow to wash film cooler o Monitor air flow for ISA injection to HOP offgas line above film cooler o Monitor melter shell leak detection level indicator o Monitor plenum pressure primary, secondary, backup shell, and plenum pressure tap pressure differential indicators o Monitor and automatically control melter level, melter feed stops on high-high level **Discharge Chamber:** • Monitor the canister level during filling via IR camera. **Electrode Power Supplies** • Monitor and automatically control electrode power supplies including alarms and faults. • Monitor electrode power supply pressure of return cooling water. • Monitor electrode power supply flow and temperature of supply cooling water. **Startup Heater Power Supplies:** • Monitor and automatically control startup power supplies including alarms and faults. **Discharge Heater Power Supplies:** • Monitor and automatically control discharge heater power supplies including alarms and faults.	**(GTC)** The HMP equipment shall be capable of being remotely operated/monitored.		Performed with ORP approved simulant. Support systems required for demonstration are as follows and shall be online and operable: C5V, DIW, HFP, HMH, HOP, HPH, HSH, ISA, LVE, MVE, PCW, PCJ, PPJ and any test conditions outlined in the *WTP Commissioning Plan*, 24590-WTP-PL-OP-05-0002. During Cold Commissioning

Requirement (para #)	Test (T) or Demo (D)	SU or COM	Plan (including SSCs)	Acceptance Criteria (TAC or GTC)*	Notes/Comments	Test Conditions
			Remote Operated Valves: • The design shall have the capability to remotely open or close using the PCJ (interlocks are provided via the PPJ). • The design shall have the capability to transmit the operating position to the PCJ.			
3.9.4.3	D	SU/COM	Demonstrate all PPJ monitoring and control functions are forwarded to the PCJ.	**(TAC)** PPJ monitoring and control functions are forwarded to the PCJ system.	Recommended to be performed in conjunction with individual PPJ requirements.	Performed with ORP approved simulant. Support systems required for demonstration are as follows and shall be online and operable: C5V, DIW, HFP, HMH, HOP, HPH, HSH, ISA, LVE, MVE, PCW, PCJ, PPJ and any test conditions outlined in the *WTP Commissioning Plan*, 24590-WTP-PL-OP-05-0002. During Cold Commissioning

Notes:
*Test acceptance criteria (TAC) are based on requirements from authorization basis documents. General test criteria (GTC) are requirements from other sources.
Any non-safety related anomalies or issues experienced during the execution of a test or demonstration plan to validate a requirement can be put on [**HOLD**] until the issue has been resolved.

Appendix B - Descriptions of System Functional Flow and Interactions

Function: A.1	Receive Feed Slurry
Detailed description: The melter feed nozzles receive feed delivered from the HFP ADS pumps. The feed nozzles are designed to prevent plugging nozzles to ensure operability.	
Initiation: This function initiates when the associated HLW melter is in startup operations.	
Termination: This function terminates when the associated HLW melter is taken out of service.	
Parallel or sequential functions: All	
Applicable modes: Normal operations	

Function: A.2	Maintain the Glass Pool Temperature
Detailed description: After the melter is up to nominal operating temperature with the startup heaters, joule-heating is initiated. The glass temperature is maintained within a band of 1100°C and 1200°C with a nominal set point of 1150°C. Power to the electrodes is regulated by maintaining a temperature setpoint in the glass pool. The glass pool temperature is measured by thermocouples located in thermowells that are immersed in the glass.	
Initiation: Melter startup or transitioning from idle mode to normal operations (feeding operations)	
Termination: When melter has reached the end of its life.	
Parallel or sequential functions: All	
Applicable modes: Normal operations, idle mode	

Function: A.3	Melt the Cold Cap and Agitate the Glass Pool
Detailed description: As the joule heating melts the cold cap deposited on the surface of the glass pool, the cold cap will melt into the glass pool while volatiles are released to the plenum. Bubblers located at different levels of the glass pool promote the mixing and thus the melting of the cold cap by agitating the melted pool by a continuously injecting forced air through nozzles from the ISA system.	
Initiation: This function initiates at the start of slurry feed operation.	
Termination: Idle mode.	
Parallel or sequential functions: All	
Applicable modes: Normal operations.	

Function: A.4	Maintain Glass Pool Level
Detailed description: Two level detector tubes are installed through the lid of the melter. They are metal tubes which extend to different depths in the glass pool, and glass level is measured by bubbling argon through each tube and comparing the back pressure to the reference plenum vacuum measured at the pressure tap in the standby offgas spool piece. The level of the molten glass in the glass pool will remain relatively constant. Operators will coordinate melter feeding and glass discharge to maintain the glass pool level.	
Initiation: The initial glass pool level will be established by the frit addition during the startup of the melter.	
Termination: This function terminates when the associated HLW melter is taken out of service.	
Parallel or sequential functions: All	
Applicable modes: Melter startup, Normal operations, and Idle mode.	

Function: A.5	Maintain Plenum Temperature
Detailed description: The plenum temperature may range from 300°C to 600°C. The plenum temperature is measured by four thermocouples (two each in two thermowells) that are averaged to provide a plenum temperature that is used as a reference for the feed system control. During an idle condition the plenum temperature can reach temperatures of 1000°C. The plenum cool-down water DIW is piped internally, from a jumper to the melter lid, which interfaces with an opening on the bottom surfaces of the feed nozzle flanges. DIW water addition is introduced prior to a restart from the idle condition to lower the plenum temperature and is stopped before normal slurry feeding is initiated. Below are general relationships between operating parameters: • Increasing slurry feed rate will decrease the melter plenum temperature (and vice versa) due to increased inventory of evaporating water and due to increased cold cap coverage (less exposed molten glass). • Increasing bubbler flow rate will increase plenum temperature (and vice versa) because as the glass pool agitation is increased there is more breakup and increased dissolution of the cold cap. This will cause more exposed glass and hence radiant heating of the plenum.	
Initiation: This function initiates when the associated HLW melter is in startup operations.	
Termination: This function terminates when the associated HLW melter is taken out of service.	
Parallel or sequential functions: All	
Applicable modes: Normal operations, Idle mode	

Function: A.6	Maintain Vacuum Pressure in Plenum
Detailed description: The HOP system maintains plenum vacuum to a set point of -5 in WC relative to its exterior environment, the HLW melter cave. This negative pressure, coupled with the gas barrier structures within the melter, assure that all melter generated gases are drawn into the HOP system for treatment. The discharge chambers are vented to the melter plenum via a standby offgas spool piece.	
Initiation This function initiates when the associated HLW melter is in startup operations.	
Termination: This function terminates when the associated HLW melter is taken out of service.	
Parallel or sequential functions: All	
Applicable modes: Melter startup, Normal operations, and Idle mode.	

Function: A.7	Lift Molten Glass to Discharge Chamber
Detailed description: The discharge system will have a glass flow riser routed through a hole in a refractory block. A tube is inserted vertically into the refractory riser to supply ISA to create a buoyant lift. At the top of the refractory riser is an alloy trough which will route the molten glass to a discharge tip located inside of the heated discharge chamber, where the molten glass will flow by gravity into an IHLW canister. Airlift of molten glass to the canister is an operator-initiated action (manual-remote). Argon is purged up into the airlift lances between glass pouring cycles to prevent glass from backing up into the airlift lances and to minimize the oxygen uptake of the melt (and possible glass foaming). Glass discharge is controlled by adjusting the rate at which the air and gas mixture is injected into the bottom of the riser.	
Initiation: Operator-initiated action to fill canisters, based on level of glass in the melter.	
Termination: When canister is filled.	
Parallel or sequential functions: All	
Applicable modes: Normal operations	

Function: A.8	Discharge Molten Glass
Detailed description: Molten glass will flow by gravity into an IHLW canister from the discharge chamber. When a canister fill is completed at one melter pour spout, the next glass discharge cycle will begin filling the next canister at the alternate pour spout while the prior canister cools in the pour cave. The average glass discharge is controlled in a batch mode, while feeding is a continuous operation.	
Initiation: Operator-initiated action to fill canisters, based on level of glass in the melter.	
Termination: When canister is filled.	
Parallel or sequential functions: All	
Applicable modes: Normal operations	

Function: A.9	Collect and Drain Water
Detailed description: Prevent the backup of water in the event of a cooling water leak or the uncontrolled addition of water from other sources.	
Initiation: This function initiates when the associated HLW melter is in startup operations.	
Termination: This function terminates when the associated HLW melter is taken out of service.	
Parallel or sequential functions: All	
Applicable modes: All	

Function: A.10	Melter Startup
Detailed description: Temporary startup heaters are installed and powered from the low voltage electrical (LVE) system to startup the melter and perform the initial bake-out of the refractory and melt the startup frit to initiate joule heating.	
Initiation: This function initiates when the associated HLW melter is in startup operations.	
Termination: This function terminates when the associated HLW melter is taken out of service.	
Parallel or sequential functions: All startup functions	
Applicable modes: Melter startup	

Function: A.11	Provide Power for the Electrodes
Detailed description: Provide power from the MVE system to the melter electrode power supplies.	
Initiation: Melter startup or transitioning from idle mode to normal operations (feeding operations)	
Termination: This function terminates when the associated HLW melter is taken out of service.	
Parallel or sequential functions: All	
Applicable modes: Normal operations, idle mode	

Function: A.12	Maintain Temperature for Glass Flow in Discharge Chamber
Detailed description: Prevents the glass from solidifying during pouring cycles to the canisters.	
Initiation: This function initiates when the associated HLW melter is in startup operations.	
Termination: This function terminates when the associated HLW melter is taken out of service.	
Parallel or sequential functions: All	
Applicable modes: Normal operations, idle mode	

Function: B.1	Argon Purge (MXG)
Detailed description: Argon will be purged continuously to the level and density probes and airlift lances to reduce glass oxidation and foaming.	
Initiation: This function initiates when the associated HLW melter is in startup operations.	
Termination: This function terminates when the associated HLW melter is taken out of service.	
Parallel or sequential functions: All	
Applicable modes: Normal operation, idle mode	

Function: C.1	ISA – Cooling of CCTV & IR Cameras
Detailed description: The cameras are provided with a uniform ISA air purge to prevent deposits of volatile materials from the discharge stream on the optics.	
Initiation: This function initiates when the associated HLW melter is in startup operations.	
Termination: This function terminates when the associated HLW melter is taken out of service.	
Parallel or sequential functions: All	
Applicable modes: Melter startup, Normal operations, and Idle mode.	

Function: C.2	ISA – Cooling for Electrodes and Electrode Extensions
Detailed description: Each melter has two electrodes. The electrode extensions are connected to electrical buses on the melter exterior. These electrodes are air cooled to ensure continued operation even with high current. The electrode extensions are air cooled to prevent glass migration through the refractory and to the melter exterior.	
Initiation: This function initiates when the associated HLW melter is in startup operations.	
Termination: This function terminates when the associated HLW melter is taken out of service.	
Parallel or sequential functions: All	
Applicable modes: Melter startup, Normal operations, and Idle mode.	

Function: C.3	Leak Detection
Detailed description: The cooling water leak detector in the shell will send a continuous signal to the operator interface and alarm or notify if there is 1 to 2 inches of standing water.	
Initiation: This function initiates when the associated HLW melter is in startup operations.	
Termination: This function terminates when the associated HLW melter is taken out of service.	
Parallel or sequential functions: All	
Applicable modes: Melter startup, Normal operations, and Idle mode.	

Function: D.1	PCW – Cooling for Electrode Power Supplies
Detailed description: Cabinets within the electrode power supply system which contain cooling water manifolds (supply and return) are required to be supplied a continuous cooling loop to prevent overheating of power supplies, with a conductivity in a range of 100 to 300 micro S/m to ensure proper cooling to the power supplies.	
Initiation: This function initiates when the associated HLW melter is in startup operations.	
Termination: This function terminates when the associated HLW melter is taken out of service.	
Parallel or sequential functions: All	
Applicable modes: Melter startup, Normal operations, and Idle mode.	

Function: D.2	PCW – Cooling for Cooling Panels
Detailed description: The steel casing for the melter area is provided with water cooling panels to maintain a thermal gradient in the bricks for corrosion control, prevent migration of glass through the bricks, and reduce heat load to the melter cave.	
Initiation: This function initiates when the associated HLW melter is in startup operations.	
Termination: This function terminates when the associated HLW melter is taken out of service.	
Parallel or sequential functions: All	
Applicable modes: Melter startup, Normal operations, and Idle mode.	

Function: E.1	DIW – Washing Film Coolers & Standby Port on SBS Bypass
Detailed description: The film cooler may be washed by injecting DIW water into the film cooler injection air port. A water flush is manually activated to the film coolers and the standby port on SBS bypass line. As the water reaches the surfaces it flashes to steam mobilizing the solids. These solids either drop back into the melter or are carried with the offgas to be removed by the SBS.	
Initiation: This function is initiated when the film coolers or standby port on SBS bypass build up solids.	
Initiation: This function is terminated after the washing is complete.	
Parallel or sequential functions: All	
Applicable modes: Manual operation	

Function: E.2	DIW – Cooling of Plenum Prior to Slurry Feeding
Detailed description: Demineralized water addition line to each feed nozzle is provided to cool the plenum and glass surface prior to introducing feed upon restart from the idle condition. The water addition line forms an annulus around the slurry feed line in the feed nozzles in order to cool the feed nozzle tip prior to starting feed. Feeding slurry into the melter without a cold cap can lead to rapid steam generation and gross aerosol emissions. To avoid these problems, DIW is slowly injected to the melter to reform a cold top just prior to resuming a slurry feed.	
Initiation: This function initiates before the associated HLW melter starts slurry feed operations.	
Termination: This function terminates when the slurry feed operation is ready to start.	
Parallel or sequential functions: All	
Applicable modes: Idle mode.	

Function: F.1	Ventilate HMP Offgas by HOP System
Detailed description: The offgas systems are provided to control radiological and chemical material releases and the generation of flammable and explosive gases during normal and accident conditions. The melter plenum is maintained at a vacuum with offgas system blowers from the HOP system. Controlled ISA air injection into the offgas line near the melter exhaust is supplied automatically at a controlled rate so that a relatively constant melter pressure is maintained.	
Initiation: This function initiates when the HLW Facility is in startup operations.	
Termination: This function terminates when HLW glass production operations are complete.	
Parallel or sequential functions: All	
Applicable modes: Melter startup, Normal operations, and Idle mode.	

Function: G.1	PCJ – Provide Controls to Support Monitoring and Communication

Detailed description: Non-Safety monitoring and control functions are supported by the PCJ. Components that are controlled automatically by the PPJ are also monitored by the PCJ during normal operations. The functions that are monitored and controlled by the PCJ are:

Melter:

- The design shall have the capability to remotely monitor and/or control:
  - Monitor and automatically control flow of air to the bubblers
  - Monitor pressure of air to the bubblers
  - Monitor flow of supply cooling water to the cooling panels
  - Monitor temperature of return cooling water from the cooling panels
  - Monitor temperature of refractory thermocouples
  - Monitor and automatically control of air flow to the electrodes and electrode extensions.
  - Monitor and automatically control temperature of the electrodes
  - Monitor individual electrode temperature indicators, will alarm on high rate of change and on differential from the average electrode temperature
  - Monitor joule heating power supply output voltage, current power, and fault diagnostics
  - Monitor plenum temperature indicators, the individual temperature indicators will alarm on high alarm on differential from the average plenum temperature
  - Manually adjust rate of feed based on melter plenum temperature.
  - Monitor individual glass pool temperature indicators, will alarm on high rate of change and on differential from the average glass pool temperature
  - Automatically control glass pool temperature by adjusting power to the electrode power supply
  - Monitor and automatically control startup heaters power and temperature
  - Monitor and manually control air flow and argon flow for airlifts to the discharge chamber
  - Monitor argon pressure for airlifts
  - Monitor argon pressure at skid HMP-SKID-00003
  - Monitor and automatically control discharge heater temperatures
  - Monitor glass pool level.
  - Monitor glass pool density.
  - Monitor flow and pressure for air flow to the SBS bypass offgas line
  - Monitor flow and pressure for air flow to frit funnel startup
  - Monitor air flow to the film cooler
  - Monitor DIW flow to wash film cooler
  - Monitor air flow for ISA injection to HOP offgas line above film cooler
  - Monitor melter shell leak detection level indicator
  - Monitor plenum pressure primary, secondary, backup shell, and plenum pressure tap pressure differential indicators
  - Monitor and automatically control melter level, melter feed stops on high-high level

Discharge Chamber:

- Monitor the canister level during filling via IR camera.

Electrode Power Supplies

- Monitor and automatic control electrode power supplies including alarms and faults.
- Monitor electrode power supply pressure of return cooling water.
- Monitor electrode power supply flow and temperature of supply cooling water.

Startup Heater Power Supplies:

- Monitor and automatically control startup power supplies including alarms and faults.

Discharge Heater Power Supplies:

- Monitor and automatically control discharge heater power supplies including alarms and faults.

Remote Operated Valves:

- The design shall have the capability to remotely open or close using the PCJ (interlocks are provided via the PPJ).
- The design shall have the capability to transmit the operating position to the PCJ.

Initiation: This function initiates when the HLW Facility is in startup operations.

Termination: This function terminates when HLW glass production operations are complete.

Parallel or sequential functions: All
Applicable modes: Melter startup, Normal operations, Idle mode, and not credited for DBE

Function: G.2	PPJ – Safety Instrumented Functions and Alarm to Support Monitoring, Control, and Communication
Detailed description: Automatic Safety monitoring and control functions are supported by the PPJ. The functions that are monitored and controlled by the PPJ are: • Terminate melter feed on plenum high pressure and low flow plenum dilution air • Monitor plenum dilution air system • Seismic shutdown signal interlocks	
Initiation: This function initiates when the HLW Facility is in startup operations.	
Termination: This function terminates when HLW glass production operations are complete.	
Parallel or sequential functions: All	
Applicable modes: All	

Function: G.3	PTJ – View plenum, pour stream, and container thermal profile
Detailed description: Images from CCTV and IR cameras as well as container level data from the IR camera are transmitted through the PTJ system.	
Initiation: This function initiates when the HLW Facility is in startup operations.	
Termination: This function terminates when HLW glass production operations are complete.	
Parallel or sequential functions: All	
Applicable modes: Normal operation	

Function: H.1	HMH – Remote maintenance and mechanical handling of melters
Detailed description: Transfers new and spent melter to and from melter cave.	
Initiation: This function initiates during an HLW Facility outage.	
Termination: This function terminates when HLW Facility outages are complete.	
Parallel or sequential functions: All maintenance functions	
Applicable modes: Maintenance, Idle mode	

Function: H.2	HSH – Remote maintenance for melter components
Detailed description: Remotely disconnect/reconnect and remove/replace melter components. Consumable components on the melters will be remotely replaced by interfacing with the HSH system.	
Initiation: This function initiates when melter components require replacement.	
Termination: This function terminates when replacement of melter components are complete.	
Parallel or sequential functions: All maintenance functions	
Applicable modes: Maintenance, Idle mode	

Appendix C - Active Safety Instruments and Functions

The listed instruments are designated as having active safety functions, implemented through interface with and programming in the PPJ system. Information in the table below reflects the current design of active safety instruments, including functions, and safety designations per the P&IDs and associated equipment and instrument lists. In some cases the current safety classification of the SSCs in design is known to exceed the design requirements. The information will be updated as needed to reflect changes to the design. The information below is provided in support of Plant Engineering and Operations and does not represent design requirements.

Function Title	Safety Designation	Sensors	Final Control Elements	Functional Description
Melter 1 Service Line Isolation Interlocks	SC	SMJ-HS-0(**TBD**)	HMP-YV-0158 via HMP-YC-0158, HMP-YV-0159 via HMP-YC-0159, HMP-YV-0160 via HMP-YC-0160, HMP-YV-0161 via HMP-YC-0161, HMP-YV-0162 via HMP-YC-0162, HMP-YV-0163 via HMP-YC-0163, HMP-YV-0164 via HMP-YC-0164, HMP-YV-0165 via HMP-YC-0165, HMP-YV-0166 via HMP-YC-0166, HMP-YV-0167 via HMP-YC-0167, HMP-YV-0168 via HMP-YC-0168, HMP-YV-0169 via HMP-YC-0169, HMP-YV-0170 via HMP-YC-0170, HMP-YV-0173 via HMP-YC-0173, HMP-YV-0176 via HMP-YC-0176, HMP-YV-0260 via HMP-YC-0260, HMP-YV-0261 via HMP-YC-0261, HMP-YV-0262 via HMP-YC-0262,	When a seismic shutdown signal is received from PPJ, the isolation valves for the service piping connected directly to the melters are closed.

			HMP-YV-0263 via HMP-YC-0263, HMP-YV-0264 via HMP-YC-0264, HMP-YV-0667 via HMP-YC-0667, HMP-YV-0767 via HMP-YC-0767	

Melter 2 Service Line Isolation Interlocks	SC	SMJ-HS-0(**TBD**)	HMP-YV-2158 via HMP-YC-2158, HMP-YV-2159 via HMP-YC-2159, HMP-YV-2160 via HMP-YC-2160, HMP-YV-2161 via HMP-YC-2161, HMP-YV-2162 via HMP-YC-2162, HMP-YV-2163 via HMP-YC-2163, HMP-YV-2164 via HMP-YC-2164, HMP-YV-2165 via HMP-YC-2165, HMP-YV-2166 via HMP-YC-2166, HMP-YV-2167 via HMP-YC-2167, HMP-YV-2168 via HMP-YC-2168, HMP-YV-2169 via HMP-YC-2169, HMP-YV-2170 via HMP-YC-2170, HMP-YV-2173 via HMP-YC-2173, HMP-YV-2176 via HMP-YC-2176, HMP-YV-2260 via HMP-YC-2260, HMP-YV-2261 via HMP-YC-2261, HMP-YV-2262 via HMP-YC-2262, HMP-YV-2263 via HMP-YC-2263, HMP-YV-2264 via HMP-YC-2264, HMP-YV-2667 via HMP-YC-2667, HMP-YV-2767 via HMP-YC-2767	When a seismic shutdown signal is received from PPJ, the isolation valves for the service piping connected directly to the melters are closed.

East Pour Tunnel 1 Canister Cooling Time Interlock	SS	HMP-ZSL-0664, HPH-IT-1509	HPH-JY-1510	A timer is started when the valve that controls glass pours closes. A second (bogie) timer is started and counts only when the bogie drive is engaged to move to the cooling position. If the bogie timer times out before the airlift timer times out, the interlock will trip and isolate the bogie drive.
West Pour Tunnel 1 Canister Cooling Time Interlock	SS	HMP-ZSL-0761, HPH-IT-1607	HPH-JY-1608	A timer is started when the valve that controls glass pours closes. A second (bogie) timer is started and counts only when the bogie drive is engaged to move to the cooling position. If the bogie timer times out before the airlift timer times out, the interlock will trip and isolate the bogie drive.
East Pour Tunnel 2 Canister Cooling Time Interlock	SS	HMP-ZSL-2664, HPH-IT-6008	HPH-JY-6009	A timer is started when the valve that controls glass pours closes. A second (bogie) timer is started and counts only when the bogie drive is engaged to move to the cooling position. If the bogie timer times out before the airlift timer times out, the interlock will trip and isolate the bogie drive.

West Pour Tunnel 2 Canister Cooling Time Interlock	SS	HMP-ZSL-2761, HPH-IT-6307	HPH-JY-6308	A timer is started when the valve that controls glass pours closes. A second (bogie) timer is started and counts only when the bogie drive is engaged to move to the cooling position. If the bogie timer times out before the airlift timer times out, the interlock will trip and isolate the bogie drive.

Appendix D - Reserved - System Procedures

Appendix E – Reserved - System History

Issued by
RPP-WTP PDC

HLW Canister Pour Handling (HPH) System Design Description

Document title:	
Document number:	24590-HLW-3ZD-HPH-00001
Revision number:	0
Type:	☑ System Design Description ☐ Facility Design Description
Originator(s):	Jeffrey Jones Brian Johnson
Checked by:	Phillip Townsend
Checker's signature:	Signature — Date: 7-2-15
Concurrence:	Mark Johnson
Concurrence signature:	for M. Johnson — Manager of Production Engineering Signature — Date: 8/10/15
Concurrence:	Ian Milgate
Concurrence signature:	Project Technical Director and Design Authority Signature — Date: 8/11/15
Approved by:	Natalie Harkey
Approver's position:	Systems Engineering Manager
Approver's signature:	Signature — Date: 8/12/2015

Validation

Appl.	Requirement Area	Requirement Developer	Signature	Date
☐	Architectural Design			
☐	Civil/Structural Design			
☑	Controls & Instrumentation Design	WAYNE UNDERHILL		4/22/15
☑	~~Commissioning~~			JMJ 5/6/15
☐	Electrical Design & AHJ			
☐	Fire Protection Systems Design			
☑	Fire Protection Engineering	BEN JOHNSON		5/1/15
☑	HVAC Design	JULIAN LEAM		04.29.15
☑	Mechanical Handling Design	JULIAN LEAM		04.29.15
☑	Mechanical Systems Design	JULIAN LEAM		04.29.15
☑	Plant Design	Travis Vincent		5/1/15
☑	Process Engineering	R Voke		4/21/15
☐	Interface (External)			
☐	Interface (Internal)			
☑	System Functions and Requirements	Jason Appleby		8-10-15
☑	Equipment Environmental Qualification	GOVIND RAJAGOPAL	G. Rajagopal	4-7-15
☐	Equipment Seismic Qualification			
☐	Materials Engineering / Technology			
☐	Plant Software Design			
☑	Reliability, Availability, Maintainability, Inspectability (Plant Engr)	Marshall Miller 4-9-15	4-9-15	
☑	Environmental Permitting (ESH)	Roger J. Landon		4/28/15
☐	Fire Safety (ESH)			
☑	Nuclear Safety Engineering	Mark Englund		4/30/15
☐	Criticality Safety			
☑	Radiological Engineering	Kyle Pettis 4/24/15		4/24/15
☐	Industrial Safety/Hygiene (ESH)			
☑	Mission (WTP Contract functional/performance rqmts)	Brian K Gifford 4-22-15	B.K. Gifford	4.22.15
☑	Operations, Maintenance, Human Factors— Operations Requirements Document	Jeff Jones for Don Rovira per email on 5/13/2015		5/13/15
☑	Quality Assurance	Virginia Cleary/Warnick		4/15/15
☐	Safeguards & Security			
☐	Startup			
☐	Transportation & Logistics			

* Validation not required for alpha/preliminary design description documents.

History Sheet

Rev	Reason for revision	Revised by
0	Initial issue. Supersedes 24590-HLW-3YD-HPH-00001, Rev. 4, *System Description for the System HPH - HLW Canister Pour Handling*	J. Jones

Contents

Validation ii

History Sheet iii

1 Introduction 1

1.1 System Identification 1

1.2 Limitations and Scope 1

1.3 Ownership and Maintenance 2

1.4 Definitions/Glossary 2

1.5 Acronyms and System Designators 2

2 General Overview 5

2.1 System Functions/Safety Functions 8

2.2 System Classification 16

2.3 Basic Operational Overview 16

3 Requirements 17

3.1 Requirements 17

3.2 Bases 17

3.3 References 18

3.4 General Requirements 18
3.4.1 Mission and Functional / Performance Requirements (incl. states/modes) 18
3.4.2 Nuclear Safety, ALARA, Environmental and Other Regulatory Requirements 22
3.4.3 System Interface Requirements 28
3.4.4 Other Technical, Specialty, Operations and Maintenance Requirements 28

3.5 Cranes 34
3.5.1 Mission and Functional / Performance Requirements (incl. states/modes) 34
3.5.2 Nuclear Safety, ALARA, Environmental and Other Regulatory Requirements 36
3.5.3 System Interface Requirements 37
3.5.4 Other Technical, Specialty, Operations and Maintenance Requirements 37

3.6 Bogie Requirements 40
3.6.1 Mission and Functional / Performance Requirements (incl. states/modes) 40
3.6.2 Nuclear Safety, ALARA, Environmental and Other Regulatory Requirements 42
3.6.3 System Interface Requirements 42
3.6.4 Other Technical, Specialty, Operations and Maintenance Requirements 42

3.7 Grapple Requirements 42
3.7.1 Mission and Functional / Performance Requirements (incl. states/modes) 42
3.7.2 Nuclear Safety, ALARA, Environmental and Other Regulatory Requirements 42
3.7.3 System Interface Requirements 43
3.7.4 Other Technical, Specialty, Operations and Maintenance Requirements 43

3.8 Posting Port and Glovebox Requirements 44
3.8.1 Mission and Functional / Performance Requirements 44
3.8.2 Nuclear Safety, ALARA, Environmental and Other Regulatory Requirements 45
3.8.3 System interface Requirements 45
3.8.4 Other Technical, Specialty, Operations and Maintenance Requirements 46

3.9 Weld Station **47**
3.9.1 Mission and Functional / Performance Requirements (incl. states/modes) 47
3.9.2 Nuclear Safety, ALARA, Environmental, and Other Regulatory Requirements 54
3.9.3 System Interface Requirements 54
3.9.4 Other Technical, Specialty, Operations and Maintenance Requirements 54

3.10 Master Slave Manipulators **56**
3.10.1 Mission and Functional / Performance Requirements 56
3.10.2 Nuclear Safety, ALARA, Environmental and Other Regulatory Requirements 56
3.10.3 System Interface Requirements 57
3.10.4 Other Technical, Specialty, Operations and Maintenance Requirements 57

3.11 Shield Hatches and Shield Doors **57**
3.11.1 Mission and Functional / Performance Requirements (incl. states/modes) 57
3.11.2 Nuclear Safety, ALARA, Environmental and Other Regulatory Requirements 61
3.11.3 System Interface Requirements 61
3.11.4 Other Technical, Specialty, Operations and Maintenance Requirements 61

3.12 Monitoring & Controls Requirements **63**
3.12.1 Mission and Functional / Performance Requirements (incl. states/modes) 63
3.12.2 Nuclear Safety, ALARA, Environmental and Other Regulatory Requirements 63
3.12.3 System Interface Requirements 65
3.12.4 Other Technical, Specialty, Operations and Maintenance Requirements 65

3.13 Other SSC Requirements **69**
3.13.1 Mission and Functional / Performance Requirements (incl. states/modes) 69
3.13.2 Nuclear Safety, ALARA, Environmental and Other Regulatory Requirements 71
3.13.3 System Interface Requirements 71
3.13.4 Other Technical, Specialty, Operations, and Maintenance Requirements 72

3.14 Relevant Codes and Standards **72**
3.14.1 Codes of Record 72
3.14.2 WTP Design Criteria, Design Guides, and General Specifications 74

4 System Description **75**

4.1 Configuration Information **76**
4.1.1 Description of System, Subsystems, and Major Components 76
4.1.2 Boundaries and Interfaces 108
4.1.3 Physical Layout and Location 108
4.1.4 Principles of Operation 112
4.1.5 System Reliability Features 113
4.1.6 System Control Features 113

4.2 Operations **115**
4.2.1 Initial Configuration (Pre-startup) 115
4.2.2 System Startup 115
4.2.3 Normal Operations 116
4.2.4 Off-Normal Operations 116
4.2.5 System Shutdown 116
4.2.6 Safety Management Programs and Administrative Controls 116

4.3 Testing and Maintenance **116**
4.3.1 Temporary Configurations 116
4.3.2 TSR-Required Surveillances 116
4.3.3 Non-TSR Inspections and Testing 116
4.3.4 Maintenance 116

4.4 Supplemental Information **116**

5 Sources, Bases, and Other References 117
5.1 Source / Basis References 117
5.2 Other References 118
5.3 Design References 119

Appendices

Appendix A Test Objectives, Conditions, and Acceptance Criteria A-1
Appendix B Descriptions of System Functional Flow and Interactions B-1
Appendix C Active Safety Instruments and Functions C-1
Appendix D System Procedures D-1
Appendix E System History E-1

Tables

Table 2-1 Functional Analysis & Crosswalk to Requirements 11
Table 3-1 HPH Equipment and Components Design Life 19
Table 3-2 HPH Safety Designations 22
Table 3-3 HPH Seismic Design Categories 26
Table 3-4 Remotely Replaceable/Maintainable Equipment/Components 28
Table 3-5 Waste Acceptance Inspecting Item Designations 33
Table 3-6 HPH Applicable Codes & Standards 72
Table 3-7 WTP Design Criteria, Guides, and General Specifications Applicable to HPH 74
Table 4-1 Interfacing Systems 108
Table 4-2 Safety Interlocks 114
Table 4-3 Packaged Equipment Local Controls 115

Figures

Figure 2-1 HPH Context Diagram 6
Figure 2-2 HPH Simplified Process Flow Diagram 7
Figure 2-3 HPH Functional Block Diagram 9
Figure 4-1 Canister Handling Cave Cranes 76
Figure 4-2 HLW Canister Grapple 79

Figure 4-3 Canister Cooling Rack 80
Figure 4-4 Canister Buffer Rack 81
Figure 4-5 Pour Tunnel Hatch 82
Figure 4-6 Weld Station Table 83
Figure 4-7 Glass Level Detector 84
Figure 4-8 Shard Sample Vacuum Pick-up Assembly 85
Figure 4-9 Sample Vial Tray 86
Figure 4-10 Glass Shard Sample Transfer Flask 87
Figure 4-11 Weld Station Carriage 88
Figure 4-12 Weld Carriage Linear Actuator and Welder 89
Figure 4-13 Canister Lid Welder 90
Figure 4-14 Camera Bracket Assembly 92
Figure 4-15 Lid Lifter 93
Figure 4-16 Primary Lid Magazine 93
Figure 4-17 Exploded View of Resistance Temperature Detector 94
Figure 4-18 Vacuum Unit 95
Figure 4-19 Glovebox and Posting Port Assembly 97
Figure 4-20 Crane Decontamination and Crane Maintenance Shield Doors 98
Figure 4-21 Crane Maintenance Area Layout 99
Figure 4-22 Pour Tunnel Bogie and Sleeve 101
Figure 4-23 Pour Tunnel Bogie and Drive 102
Figure 4-24 Bogie Maintenance Shield Doors 104
Figure 4-25 Bogie Maintenance Area 105
Figure 4-26 Solid Waste Basket 106
Figure 4-27 Waste Basket & Transfer Container Loaded onto Bogie Sleeve 107
Figure 4-28 HLW Canister 109

1 Introduction

1.1. System Identification

This system design description (SDD) defines the technical and functional/performance requirements of the High-Level Waste (HLW) Canister Pour Handling (HPH) system. This document details the waste treatment requirements, environmental compliance requirements, and authorization basis requirements of the HPH system as they are currently known and understood. This SDD describes the process/functional requirements of the HPH system, including:

- Services and utility requirements, operating materials and supplies, and other external interfaces
- Operations limits and design bases
- Other criteria and requirements pertinent to the design of the HPH system.

The boundaries, system interfaces and functional description of the HPH system are provided in section 2.

1.2 Limitations and Scope

The scope of this document is to provide an authoritative source for the collected set of requirements applicable to the HPH system, inclusive of interface requirements with other systems. The SDD is prepared in accordance with 24590-WTP-3DP-G04B-00093, *System and Facility Design Descriptions*. The intended use of these collected requirements is to establish the following:

- Inform the HPH system design effort
- Provide a validated basis upon which to confirm implementation of requirements in design
- Provide the expected means of verification for requirements, including those that are post-construction (i.e., startup and commissioning test objectives and acceptance criteria)

All requirements established in this document are verified to be implemented in design and/or physical configuration using a graded approach commensurate with importance and risk.

Where numeric values are provided within requirements in Section 3, these values are provided without additional margin. For example if a value is established in the Basis of Design, no attempt is made to remove any margin that may or may not have gone into the establishment of that value, neither has any margin been added. Where values are stated as minimums or maximums, there is no expectation that any additional margin be applied in the verifications that the design requirements have been met. Testing that is required to be performed in accordance with external codes and standards must follow the rules established in those documents.

The scope of this document is limited to HPH system features that support production and/or protect equipment, personnel, and the environment.

This document is intended to be used in support of design development, design verification, turnover, startup testing, and commissioning activities. This document will be maintained current relative to changes in source requirements documents. Updates shall be made concurrent with these changes to source requirements, or implementation shall be tracked for completion in accordance with 24590-WTP-GPG-ENG-0170, *Impact Evaluation*.

Engineers are expected to be able to use the requirements in section 3 of this document as input for design development without recourse to the upper-tier source documents or searches of the Design Criteria Database (Technical Requirements Management System). Design engineers are still required to ensure that requirements contained with the discipline/functional standards incorporated by reference in section 3 are followed. These documents contain additional criteria that are based on applications of external codes/standards, corporate best practices, and engineering management expectations for a consistent approach to design.

Certain requirement statements in this document are preceded by a "**[HOLD]**" notation. This notation is used when there are unresolved technical issues, known inconsistencies among source requirements, or other management suspensions of work requiring resolution. Requirements with the "**[HOLD]**" notation may be used to proceed with preliminary or committed design but shall not be used in support of fabrication or construction until the "**[HOLD]**" is removed.

The contents of Section 4 are being developed in a phased approach in support of future operations and maintenance. At this revision, only the contents of Sections 4.1.1 through 4.1.4 and 4.1.6 have been updated and verified. Sections 4.1.5, 4.2, 4.3 and 4.4 are currently reserved and will be updated in a later phase after the work to support completion of these sections has been completed.

Appendix C is reserved to support definition of baseline operating data needs. Additional Appendices may be added in the future as needed.

1.3 Ownership and Maintenance

The Design Authority (DA) organization is responsible for the preparation and maintenance of this document through turnover of the included systems to Operations. Thereafter, maintenance of this document is the responsibility of the Plant Engineering organization; however, the Engineering DA organization retains responsibility for the establishment and definition of design requirements.

1.4 Definitions/Glossary

Confinement. For consistency, regardless of usage elsewhere, confinement is used in this document to denote the controls used to prevent or minimize the release or migration of airborne contaminants, including aerosols, hazardous vapors, or gases.

Containment. For consistency, regardless of usage elsewhere, containment is used in this document to denote the controls used to prevent or minimize the release or migration of liquid or liquid-entrained contaminants.

Primary confinement / containment. The structures, systems, or components (SSCs) and their associated boundaries that confine/contain airborne and liquid contaminants under normal conditions.

Secondary confinement / containment. The structures or other design features that capture and prevent further spread or migration of airborne/liquid contaminants once they have escaped primary confinement/containment.

1.5 Acronyms and System Designators

Acronyms

A	Analysis
ALARA	as low as reasonably achievable
BMA	Bogie Maintenance Area

BOD	*Basis of Design*
CCTV	Closed Circuit Television
COR	Code of Record
CMA	Crane Maintenance Area
CMAA	Crane Manufacturers' Association of America
CMTR	certified material test report
CoC	certificate of conformance
CTN	component tag number
D	Demonstration
D&D	decontamination and decommissioning
DA	Design Authority
DBE	design basis event
DIW	demineralized water
DOE	US Department of Energy
DVR	design verification report
DWP	Dangerous Waste Permit
ENG	Engineering
EQP	equipment qualification package
FCT	Flange Conditioning Tool
FPM	Feet per Minute
GTAW	gas tungsten arc welding
HEPA	High Efficiency Particulate Air (Filtr)
HLW	High-Level Waste (Facility)
HVAC	Heating, Ventilating, and Air-Conditioning
I	Inspection
IBC	International Building Code
IHLW	immobilized high-level waste
JCDPI	justification for continued design, procurement, and installation
LAW	Low-Activity Waste
LOI	Local Operator Interface
LFL	lower flammability limit
MR	material requisition
MSD	Mechanical Sequence Diagram
MSM	Master Slave Manipulator
MTG	Metric Tons of Glass
NFPA	National Fire Protection Association
NDE	non-destructive examination
OCRWM	DOE, Office of Civilian Radioactive Waste management (or DOE-RW)
ORD	Operations Requirements Document
ORP	DOE Office of River Protection

P&ID	piping and instrumentation diagram
PT	Pretreatment (Facility)
RCRA	Resource Conservation and Recovery Act
ROIN	requirement object identification number
RTD	Resistance Temperature Detector
SC	safety class
SC-I	seismic category-I
SC-II	seismic category-II
SC-III	seismic category-III
SC-IV	seismic category-IV
SDD	system design description
SFC	single failure criteria
SPAD	Shielded Personnel Access Door
SRD	safety requirements document
SS	Safety Significant
SSC	structures, systems, or components
T	Test
VOIP	Voice over Internet Protocol
WAC	Washington (State) Administrative Code
WAI	waste acceptance impacting
WAPS	waste acceptance product specifications
WCP	waste form compliance plan
WTP	Hanford Tank Waste Treatment and Immobilization Plant
ZOI	zone of influence

System Designators

C3V	C3 ventilation system
C5V	C5 ventilation system
HDH	high-level waste canister decontamination handling system
HEH	high-level waste canister export handling system
HMP	high-level waste melter process system
HPH	high-level waste canister pour handling system
HRH	high-level waste canister receipt handling system
HSH	high-level waste melter cave support handling system
ISA	instrument service air system
MHJ	Mechanical handling Control System
PCJ	process control system
PCW	plant cooling water system
PPJ	Programmable Protection System
PTJ	process and mechanical handling CCTV system
RLD	radioactive liquid waste disposal system

RWH high-level waste radioactive solid waste handling system

2 General Overview

The primary purpose of High-Level Waste Facility (HLW) Canister Pour Handling (HPH) system is to transfer empty canisters to the glass pouring locations, interface with the HMP system to monitor glass filling operation, weld a lid onto the glass filled canister, and then transfer the canister to the downstream HLW Canister Decontamination Handling (HDH) system.

Figure 2-1 provides a contextual depiction of the HPH system in terms of its primary interrelationships with other systems and utilities. This diagram does not differentiate among some utilities that have both normal and safety service provisions. This diagram is used in support of functional and performance definition at the system level. Figure 2-2 provides a process flow diagram of the overall HPH system. Blue arrows are used in this figure to highlight the primary flow path of the HPH system and the black arrows illustrate the supporting systems and utilities. See Section 1.5 for the list of relevant system designators.

Figure 2-1 HPH Context Diagram

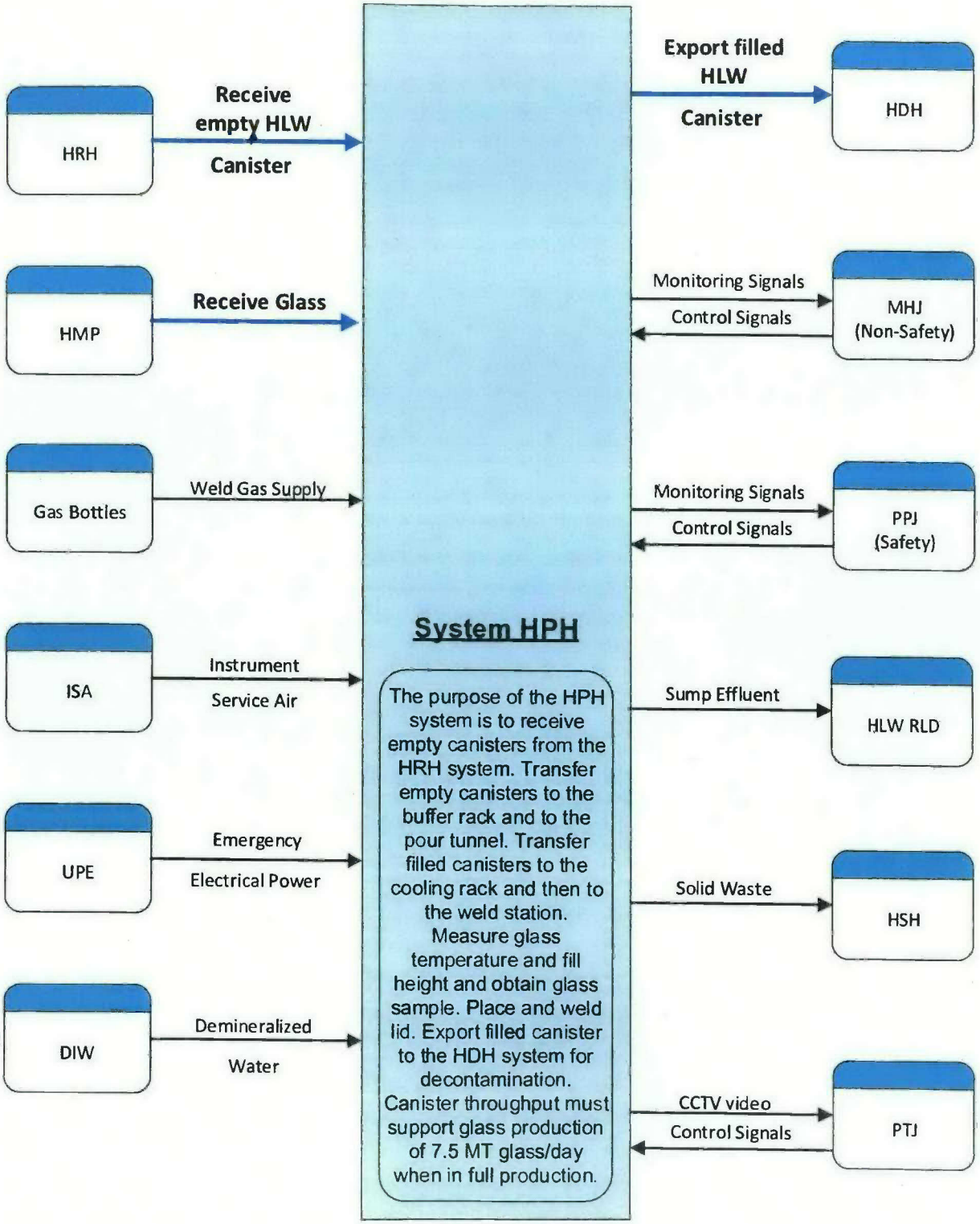

Figure 2-2 HPH Simplified Process Flow Diagram

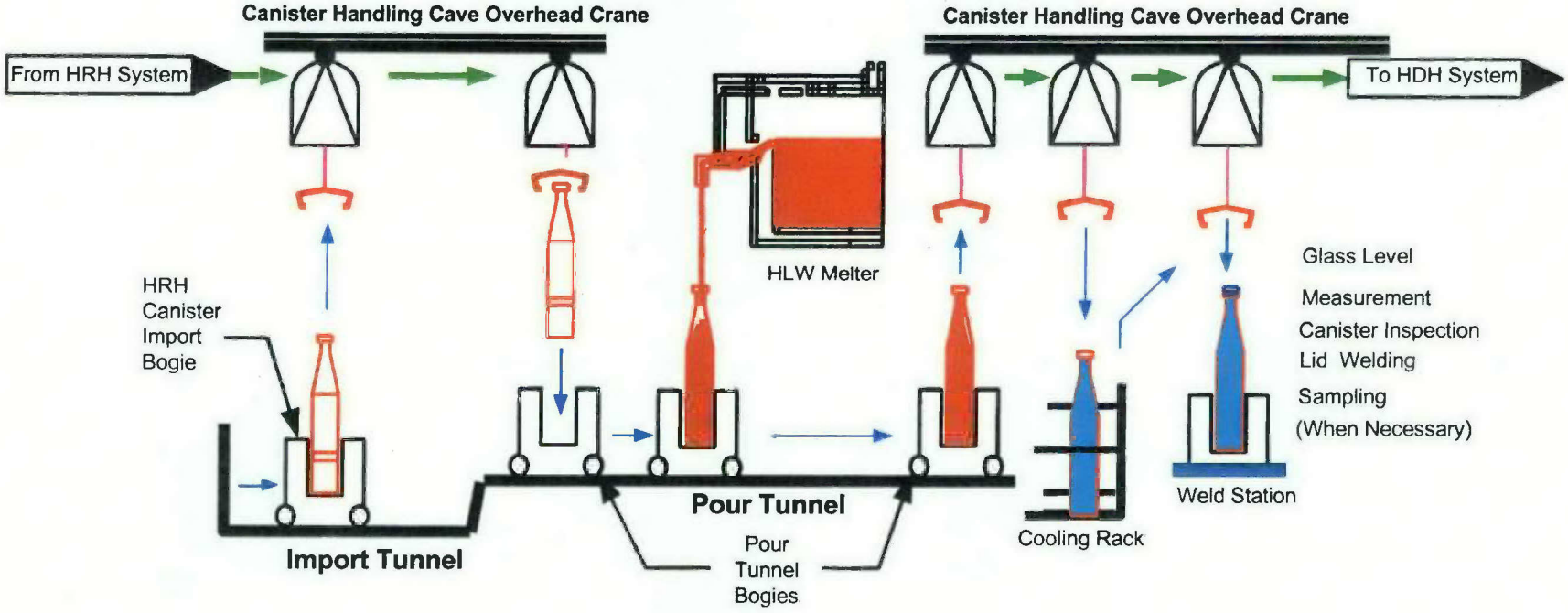

2.1 System Functions/Safety Functions

This section defines the HPH functions and attributes that need to be addressed by the system design. Figure 2-3 provides the functional block diagram for the HPH systems, indicating the internal and external systems and utilities that provide the primary support or interface for that function. Section 3 provides the design and performance design requirements to meet both functional and other requirements.

System interfaces are provided for reference only. See Section 1.5 for the list of relevant system designators.

Figure 2-3 HPH Functional Block Diagram

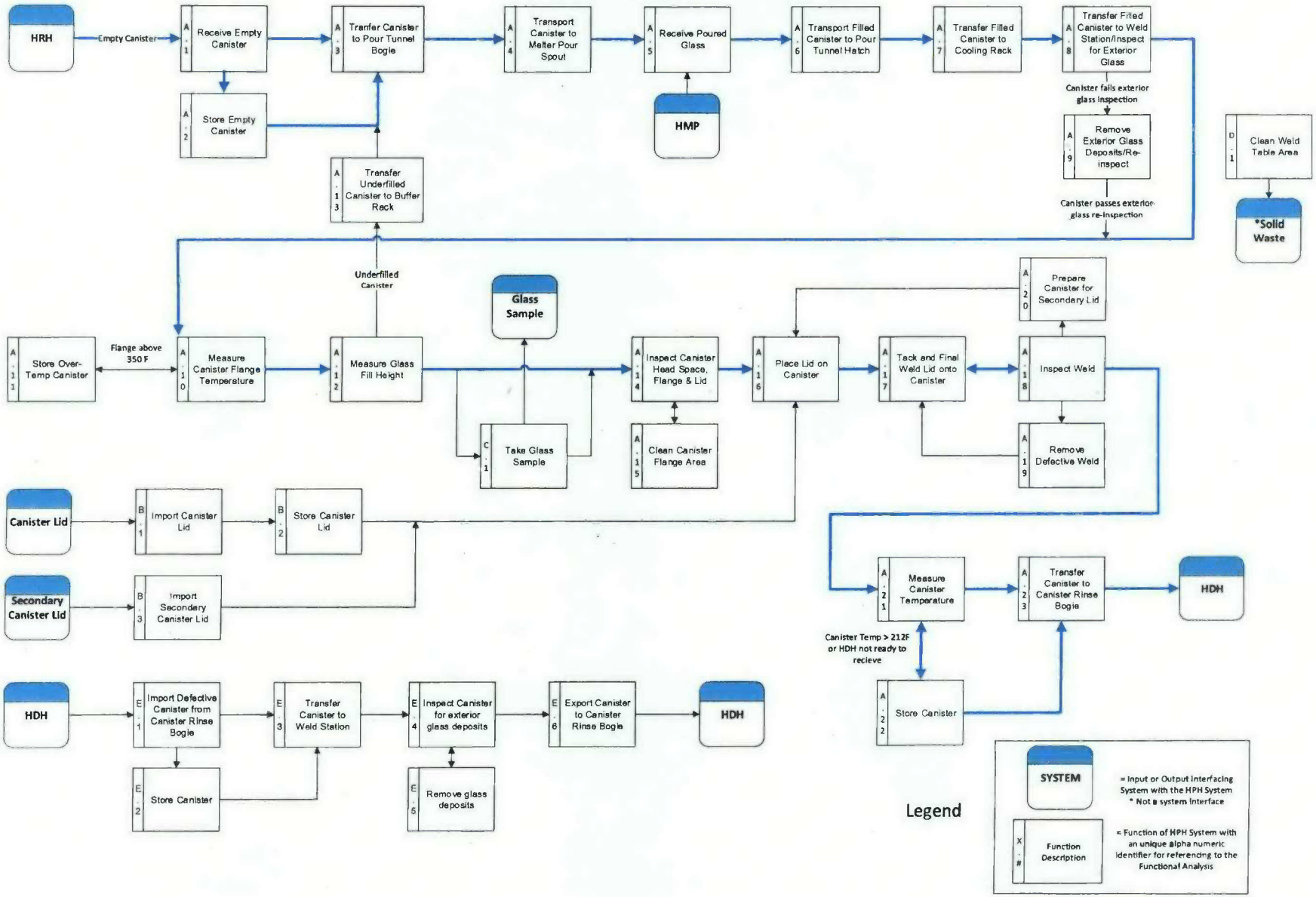

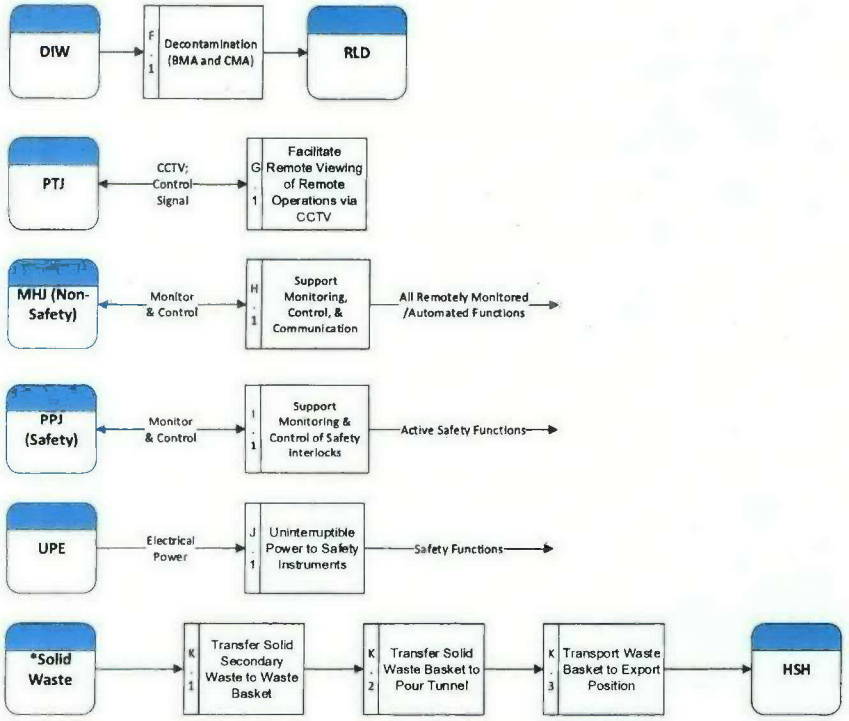
DIW
F.1
Decontamination (BMA and CMA)
RLD
PTJ
CCTV; Control Signal
G.1
Facilitate Remote Viewing of Remote Operations via CCTV
MHJ (Non-Safety)
Monitor & Control
H.1
Support Monitoring, Control, & Communication
All Remotely Monitored /Automated Functions
PPJ (Safety)
Monitor & Control
I.1
Support Monitoring & Control of Safety Interlocks
Active Safety Functions
UPE
Electrical Power
J.1
Uninterruptible Power to Safety Instruments
Safety Functions
*Solid Waste
K.1
Transfer Solid Secondary Waste to Waste Basket
K.2
Transfer Solid Waste Basket to Pour Tunnel
K.3
Transport Waste Basket to Export Position
HSH

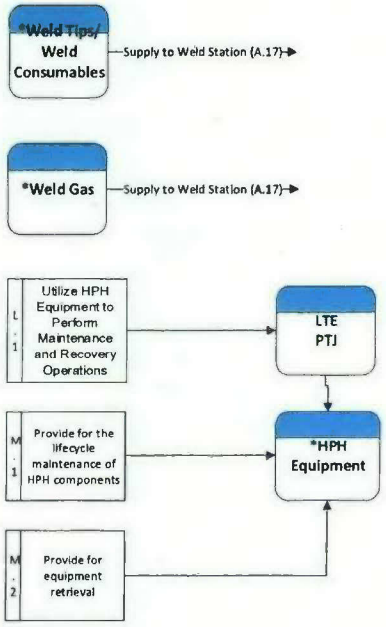
*Weld Tips/ Weld Consumables
Supply to Weld Station (A.17)
*Weld Gas
Supply to Weld Station (A.17)
L.1
Utilize HPH Equipment to Perform Maintenance and Recovery Operations
LTE PTJ
M.1
Provide for the lifecycle maintenance of HPH components
*HPH Equipment
M.2
Provide for equipment retrieval

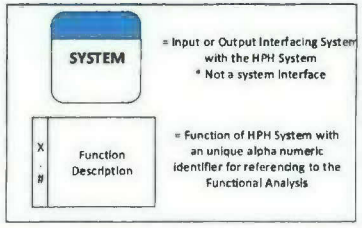
Legend
SYSTEM
= Input or Output Interfacing System with the HPH System
* Not a system interface
X.#
Function Description
= Function of HPH System with an unique alpha numeric identifier for referencing to the Functional Analysis

The functions included in Figure 2-3 are the primary and secondary level functions of the HPH systems. These functions are further described in Table 2-1. Where appropriate to support definition of functional/design requirements, functions have been further decomposed and additional levels of supporting functions are also described. The requirement section number provides the location of the applicable functional analysis incorporated into system requirements.

Appendix B provides a further decomposition of system functions, including initiating, terminating, and integrating events and functions.

Table 2-1 Functional Analysis & Crosswalk to Requirements

Reference	Functional Analysis Description	Requirement Section No.
A.	**Receive, store, and fill empty canisters. Sample, cool, lid, inspect, store, and export filled canisters.**	N/A
A.1	Receive empty canister – The upper canister handling cave crane uses the canister grapple to remove the canister from the import tunnel bogie and bring it into the canister handling cave.	3.4.1.5
A.2	Store empty canister - The crane deposits the canister in the canister buffer rack for storage.	3.4.1.5, 3.13.1.1.5
A.3	Transfer canister to pour tunnel bogie– The upper canister handling cave crane uses the canister grapple to transfer an empty canister from the buffer rack, or a newly-received canister, to the selected pour tunnel bogie.	3.4.1.5
A.4	Transport canister to melter pour spout – The pour tunnel bogie transports the canister to the melter pour position, and the bogie locking bolt is engaged.	3.4.1.5
A.5	Receive poured glass – The pour tunnel bogie remains parked and locked in the melter pour position for the duration of the glass pour.	3.12.2.1.2
A.6	Transport filled canister to pour tunnel hatch – The locking bolt is disengaged, and the pour tunnel bogie transports the filled canister to the canister cooling position. The bogie remains parked in the cooling position for a pre-determined time period before transporting the canister to the pour tunnel hatch.	3.4.1.5, 3.12.2.1.2
A.7	Transport filled canister to cooling rack – The upper canister handling cave crane uses the canister grapple to transfer the filled canister from the pour tunnel to the canister cooling rack.	3.4.1.5, 3.13.1.1.5
A.8	Transfer filled canister to weld station/Inspect for exterior glass – The upper canister handling cave crane uses the canister grapple to transfer a filled canister from the cooling rack to the selected weld station. The crane maneuvers the canister through the visual inspection field as necessary to facilitate inspection for exterior glass deposits. Canisters that pass inspection are deposited in the weld station. Canisters that fail inspection remain suspended for glass removal.	3.4.1.5, 3.9.1.3
A.9	Remove exterior glass deposits and re-inspect the canister – The weld station Master Slave Manipulators (MSMs) and associated tools remove solid glass deposits from the canister exterior. The upper canister handling cave crane maneuvers the canister as necessary to facilitate glass removal and re-inspection. Upon passing inspection, the canister is moved to the weld station.	3.9.1.3, 3.9.4.2
A.10	Measure canister flange temperature – The weld station MSM positions the temperature measurement instrument to measure the canister flange temperature. Temperature must be verified to be below 350°F,	3.9.1.6

Reference	Functional Analysis Description	Requirement Section No.
A.11	Store over-temperature canister – As needed, the upper canister handling cave crane uses the canister grapple to transfer the over-temperature canister from the weld station to a storage rack for cooling. After the cooling period is completed, the crane returns the canister to the weld station.	3.4.1.5, 3.13.1.1.5
A.12	Measure glass fill height - The weld station MSM positions the glass level detector to measure the canister fill level relative to the canister flange.	3.9.1.5
A.13	Transfer underfilled canister to buffer rack – As needed, the upper canister handling cave crane uses the grapple to transfer the underfilled canister from the weld station to the buffer rack to await additional fill.	3.4.1.5, 3.13.1.1.5
A.14	Inspect canister head space, flange and lid – The canister head space is inspected for free liquids or foreign materials. The canister flange is inspected for damage, exterior glass deposits, or foreign materials. The lid is inspected for foreign materials.	3.9.1.4, 3.9.4.2
A.15	Clean canister flange area – As needed, weld station MSM and associated tools remove foreign materials and free liquids from the flange and head space. Exterior glass deposits are removed from the flange, and the lid is cleaned, as necessary.	3.9.1.4.1
A.16	Place lid on canister – The weld station MSM maneuvers the canister lid lifter to acquire a lid and place it on the canister flange. Primary lids are acquired from the primary lid magazine. Secondary lids are acquired from the weld station posting port.	3.9.1.1
A.17	Tack and final weld lid on canister – The weld station MSM places the lid weight on the canister lid. The lid welder maneuvers into position on the canister flange and the MSM engages the welder alignment clamps. The lid welder tack welds the lid to the canister. The tack welds are visually inspected. Canisters that pass inspection receive a full-perimeter weld from the lid welder.	3.9.1.1, 3.9.4.2
A.17.1	Import weld station consumables, such as weld torch blocks, on an as needed basis from the weld station posting port.	3.8.1.3
A.18	Inspect weld – Visually inspect tack welds or final full-perimeter weld.	3.9.1.1, 3.9.4.2
A.19	Remove defective weld – As needed, the upper canister handling crane places the flange conditioning tool on the canister flange to remove defective weld areas. The weld station MSM and associated tools clean the flange after weld removal is complete.	3.9.1.4.1, 3.9.4.2
A.20	Prepare canister for secondary lid – As needed, the upper canister handling crane places the flange conditioning tool on the canister flange to rework the flange to accept a secondary lid. The weld station MSM and associated tools clean the flange after rework is complete.	3.9.1.1, 3.9.1.4.1, 3.9.4.2
A.21	Measure canister temperature - The weld station MSM positions the temperature measurement instrument to measure the canister exterior temperature.	3.9.1.6
A.22	Store canister – As needed, the upper canister handling cave crane uses the canister grapple to transfer the lidded canister from the weld station to a storage rack. Storage may be necessary to cool an over-temperature canister, or result from system HDH being unable to receive the canister. Over-temperature canisters temperatures must be re-measured, and verified to be below 212°F, prior to transferring the canister to the HDH system.	3.4.1.5, 3.13.1.1.5
A.23	Transfer filled canister to canister rinse bogie– The upper canister handling cave crane uses the canister grapple to transfer the lidded canister from the weld station, or from a storage rack, to the canister rinse bogie (system HDH).	3.4.1.5
B.	**Import Primary and Secondary Canister Lid**	N/A

Reference	Functional Analysis Description	Requirement Section No.
B.1	Import primary canister lid	3.8.1.3, 3.9.1.1
B.2	Store primary canister lid in lid magazine	3.8.1.3, 3.9.1.2
B.3	Import secondary canister lid (as needed)	3.9.1.1
C.	**Collect Glass Samples**	N/A
C.1	Take glass sample/store in collection bottle	3.9.4.1
C.2	Transfer collection bottle to crane decontamination area	3.9.4.1
C.3	Transfer collection bottle to shielded flask	3.9.4.1
D.	**Clean Weld Table**	N/A
D.1	Clean weld table area – The weld table is equipped with a vacuum unit to be used for cleaning the weld table of solid glass deposits to be exported to the HSH system.	3.4.1.6
E.	**Import filled canister from the HDH system for solid glass deposit removal.**	N/A
E.1	Import defective canister from canister rinse bogie - The upper canister handling cave crane uses the canister grapple to transfer a filled canister from the from the HDH system, following a failed glass deposit inspection.	3.4.1.5
E.2	Store canister - The upper canister handling cave crane uses the canister grapple to transfer the filled canister from the canister rinse tunnel to the canister cooling rack.	3.4.1.5
E.3	Transfer canister to weld station - The upper canister handling cave crane uses the canister grapple to transfer a filled canister from the cooling rack to the selected weld station.	3.4.1.5
E.4	Inspect canister for exterior glass deposits - The crane maneuvers the canister through the visual inspection field as necessary to facilitate inspection for exterior glass deposits. Canisters that pass inspection are deposited in the weld station. Canisters that fail inspection remain suspended for glass removal.	3.9.1.3
E.5	Remove glass deposits - The weld station Master Slave Manipulators (MSMs) and associated tools remove solid glass deposits from the canister exterior. The upper canister handling cave crane maneuvers the canister as necessary to facilitate glass removal and re-inspection.	3.9.1.3
E.6	Export canister to canister rinse bogie - The upper canister handling cave crane uses the canister grapple to transfer the lidded canister from the weld station, or from a storage rack, to the canister rinse bogie (system HDH).	3.4.1.5
F.	**Decontamination**	N/A
F.1	Decontaminate Equipment in HPH tunnels, Maintenance Areas, and Caves – DIW and a CO_2 decontamination unit are used to decontaminate the HPH equipment. The ISA system is supplied to the CO_2 decontamination unit. The wastewater is collected in floor sumps and transferred to the RLD system.	3.4.4.2
G.	**Remote Operations**	N/A
G.1	Facilitate remote viewing of operations via CCTV – HLW PTJ system utilizes closed circuit television cameras in the canister handling cave and at the weld station to allow remote viewing of operations and equipment.	3.4.4.3, 3.5.4.1
H.	**Provide Non-Safety Monitoring, Controls, and Communication**	N/A
H.1	Support the Non-Safety Monitoring, Control and Communication Functions - Support the non-safety monitoring, control and communication functions of the HPH mechanical handling equipment.	3.12.1.1

Reference	Functional Analysis Description	Requirement Section No.
H.1.1	The MHJ provides control and monitoring to MH equipment involved in the following canister transfers: • Import of an IHLW canister from HRH into the canister handling cave through the canister receipt import hatch. • Placement of IHLW canister from HRH into the canister handling cave buffer rack • Removal of canister from the storage rack and placement on the pour tunnel bogie through the canister handling cave export hatch. • Movement of empty/filled canister through pour tunnel in the pour tunnel bogie. • Placement of filled IHLW canister onto cooling rack. • Removal of filled canister from the cooling rack and export to the canister handling cave through the pour tunnel export hatch. • Placement of filled canister into the canister handling cave weld station. • Removal of sealed canister from the canister handling cave weld station to the storage rack. • Transfer filled canister to the HDH canister rinse bogie	3.12.1.1
H.1.2	The MHJ provides monitoring and control of the shield doors in the canister handling cave and all HPH hatches via through wall drives	3.12.1.1
H.1.3	The MHJ provides monitoring and control to the following equipment recovery devices: • Canister handling cave crane cable reeling system • Pour tunnel bogie recovery system	3.12.1.1
H.1.4	The MHJ provides monitoring and automatic control to the following non-safety functions: • Prevent equipment damage • Support facility HVAC	3.12.4.2.3
I.	**Provide Safety Monitoring, Controls, and Communication**	N/A
I.1	Support the Active Safety Instruments and Functions - Support the active safety instruments and functions through the interface with the PPJ system or engineered as local safety instrumented functions.	3.12.3.1
I.1.1	Interlock prevents bogie from moving out of cooling position for a predetermined amount of time. Bogie movement is restricted immediately after completion of the pour.	3.12.2.1.2, 3.12.2.2, 3.12.3.1
I.1.2	Interlock prevents the posting port out-cave shield from opening on detection of a high radiation source.	3.12.2.1.1, 3.12.2.2, 3.12.3.1
I.1.3	Interlock prevents the posting port out-cave shield door from opening unless the in-cave door is locked in the closed position.	3.12.2.1.1, 3.12.2.2, 3.12.3.1
I.1.4	Interlock prevents the posting port in-cave shield door from opening unless the out-cave door is closed.	3.12.2.1.1, 3.12.2.2, 3.12.3.1
J.	**Electrical power - The system provides electrical power to the HPH equipment and instruments.**	N/A

Reference	Functional Analysis Description	Requirement Section No.
J.1	**[HOLD]** Uninterruptable Power to Posting Port Safety Significant interlocks – The posting port interlocks are safety significant and have a connection to the uninterruptable power supply. Current design provides uninterruptible power to the posting port interlocks. For those interlocks that have a defined Safety Significant function, functionality is not required in DBA conditions that include or result in a loss of normal power; therefore the need for uninterruptible power is not supported by design requirements in the PDSA or elsewhere.	N/A
K	**Export Solid Waste**	N/A
K.1	Transfer solid secondary waste to waste basket. The weld table contains two storage areas, one of which houses a vacuum unit and one that houses a waste basket used to collect and export solid waste.	3.4.1.6
K.1.1	Collect solid glass deposits from weld table cleaning using the vacuum tool.	3.4.1.6
K.1.2	Place secondary solid waste such as welding electrodes, replacement switches and cables into the waste basket located at the weld station.	3.4.1.6
K.1.3	The waste basket lid is placed on and secured by the HPH MSM. The lid has four tabs around its diameter that locate into cut-outs in the top of the basket. The lid incorporates a lifting bail so that it may be handled remotely by the canister handling cave cranes.	3.4.1.6
K.2	Transfer solid waste basket to pour tunnel.	3.4.1.6
K.3	Transport waste basket to export position.	3.4.1.6
L	**Perform Recovery Operations**	N/A
L.1	Mechanical Handling equipment will be utilized to perform recovery and/or lifecycle maintenance of the following canister handling cave equipment or components. • Wall mounted in-cave lights (system LTE) • In-Cave Cameras • Master-slave manipulator (MSM) slave arm • Canister grapple • Hatch and shield door blocks/panels • Pour Tunnel Bogie Canister Sleeves • Canister Lid Welders, Torch Body, and Wire Feed Assembly • Weld Station Table • Weld Station Carriages • Weld Station Lid Weight • Shield Window Impact Barrier • Canister Flange Conditioning Tool • Pneumatic Needle Descaler	3.4.4.1, 3.5.1.3, 3.6.1.1, 3.7.4.1, 3.13.1.2
M.	**Maintenance of Installed Components – The system accesses all in-cave remotable equipment remotely for maintenance purposes and provides an equipment maintenance area within the CMA for hands-on maintenance.**	N/A
M.1	Provide lifecycle maintenance	3.4.4.5
M.1.1	Maintain in-cave canister handling cranes	3.5.1.4
M.1.2	Maintain bogies	3.6.1.4
M.1.3	Maintain welding machine	3.9.1.7
M.2	Provide for equipment retrieval	3.5.1.3

2.2 System Classification

The HPH systems contain components with the following classifications/designations:

☒ Safety Class
☒ Safety Significant
☒ Dangerous Waste Permit affecting*
☐ Air Permit affecting
☒ Waste Acceptance Impacting
☒ General

*Note: System is only DWP affecting to ensure system operation cannot damage waste processing systems to result in an unplanned release (spill).

2.3 Basic Operational Overview

A functional description of the system is provided in sections 2 and 2.1, which provide the context diagram for the system, interfaces with other systems, a simplified diagram of the system, a functional block diagram, and descriptions of the system functions. A basic operational overview of the system is provided below; detailed operational information is provided in section 4.

The interfacing HLW Canister Receipt Handling (HRH) system transfers empty canister into the import tunnel that runs beneath the HPH system canister handling cave in the north-south direction. Empty canisters enter the HPH system canister handling cave through a hatch located at the north end of the import tunnel. On completion of canister operations in HPH, the glass filled canisters are transferred to the HDH system through a hatch that is located at the east end of the canister handling cave.

Operations performed in the HPH system include transporting empty canisters to and from the glass fill locations, staging the canisters for cooling, measurement of glass fill height, taking of glass samples and welding a lid onto the canister. The glass fill process takes place in one of two pour tunnels located below the canister handling cave and accessed via hatches located in handling cave floor. On completion of the glass fill process the canisters are transferred to the canister handling cave cooling rack prior to being moved to the weld station where glass fill height measurements and glass sample are taken, and the lid closure weld completed. From the weld station canisters are moved to the buffer rack where they are stored until transferred to the HDH system. The buffer rack may also be used to store empty canisters after receipt from the HRH system.

The canisters are transported through the HPH system using one of two overhead cranes that operate on a duty/standby principle. Each pour tunnel contains two bogies that are used to locate the canisters below the melter pour spouts; there are two pour spouts per melter with one pour spout at a time used for canister filling. The glass fill process takes approximately 19 hours per canister for a production rate of 7.5 metric tons of glass per day (MTG/day). The glass pour temperature is approximately 2100 °F. The current melter design is sized for a production of 6 MTG/day, however, to accommodate future increases the HPH system is required to support 7.5 MTG/day; see Section 6.3.3 of 24590-WTP-DB-ENG-01-001 *Basis of Design.*

The pour tunnels are insulated to maintain concrete temperatures within allowable limits. The insulation extends around the walls, floors, and ceiling. Insulation is also fitted in the canister handling cave on concrete that is adjacent to the cooling and buffer racks. A simplified diagram of the system is presented as Figure 2.

Solid waste generated by the HPH system, for example welding torch blocks, swabs, electrical cables etc., will be loaded into a solid waste basket and exported to the HLW Melter Cave Support Handling (HSH) system via the pour tunnels.

3 Requirements

3.1 Requirements

Requirements are documented in Sections 3.1 through section 3.13. Each requirement statement is accompanied by a basis discussion (as needed) and the expected means of verification. Requirements must be met in design. If a requirement stated in this document cannot be met in design, then a revision to the requirement needs to be pursued, if possible, or the design must be changed to meet the requirement.

Requirements preceded by "**[HOLD]**" may only be used in support of preliminary or committed design, which shall also be issued with appropriate holds per 24590-WTP-3DP-G04B-00046, *Engineering Drawings* procedure. They may not be used in support of fabrication or construction.

The following abbreviations are used to designate the selected method for verification (see 24590-WTP-GPG-ENG-0161, *Technical Requirements Management*, for additional guidance concerning methods of verification):

(I) Inspection
(A) Analysis
(D) Demonstration
(T) Test

The following abbreviations are used to designate the *organization* responsible for performing the verification:

(ENG) Engineering
(CON) Construction
(SU) Startup
(COM) Commissioning
(SUP) Supplier
(SUB) Subcontractor
(SQR) Supplier Quality Representative
(REC) Receiving

3.2 Bases

Basis discussions are provided as needed to explain the decomposition or interpretation from the originating source requirement(s). Where a [**HOLD**] has been applied to a requirement, this section will include the basis for the "HOLD." Where included, basis discussions provide supplementary information to help the reader understand the origin or intent of a requirement. Basis statements do not include requirements and are not to be considered as requirements.

3.3 References

The requirements include a source document reference and a requirement object identification number (ROIN) included in brackets following the requirement statement. Each unique source document reference, with ROIN number(s), is bracketed separately. Requirements may include a reference to the Section 2.2 Functional Description are listed with parentheses following the source document and ROIN number references.

A complete listing of all source references may be found in section 5.1.

3.4 General Requirements

3.4.1 Mission and Functional / Performance Requirements (incl. states/modes)

3.4.1.1 Room Environment Conditions for Safety SSCs

Requirement: The safety equipment in the HLW HPH system credited with a safety function shall be designed to operate and withstand their most severe environmental conditions identified for the room in which they are installed, inclusive of aging effects, throughout their qualified life. [Safety Criterion 4.4-1, 4.3-4, SRD, ROIN: 1-38690, ROIN: 1-38679, ROIN: 8-3521, ROIN: 1-38680]

Basis Discussion: Safety SSCs designated as SC and SS are designed and qualified to perform their safety function as intended in the room environment conditions associated with the events for which they are intended to respond. The effects of aging on normal and abnormal functioning shall be considered in design and qualification. *HLW Room Environment Data Sheet* (24590-HLW-U0D-W16T-00001) identifies environmental conditions for rooms that house safety SSCs. [ALARA]

Verification: Verification is expected to be achieved through:

Verif. Method	Verif. By	Plan	Notes/Comments
A/T	ENG	Perform analysis or testing to verify the ability of the SSCs credited with a safety function to withstand the environmental conditions for rooms in which they are installed.	Document in EQP. See *HLW Room Environment Data Sheet* (24590-HLW-U0D-W16T-00001) for room environmental conditions.
I	ENG	Review the design to verify conformance to the as-tested or as-analyzed configuration.	Document in an evaluation/assessment or EQP

3.4.1.2 Room Environment Conditions for Non-Safety SSCs

Requirement: Non-safety equipment/components shall be designed to operate and withstand the service conditions per Table 12-1 in the BOD. [Table 12-1, BOD, ROIN: 2-39190][Sections 11.16, 16.1, ORD, ROIN: 14-1248E, ROIN: 8-7000].

Basis Discussion: Non-safety SSCs are designed to function as intended in the room environment conditions associated with their location.

Verification: Verification is expected to be achieved through:

Verif. Method	Verif. By	Plan	Notes/Comments
I	ENG	Review of design of non-safety, active SSCs to ensure compliance with BOD Table 12-1 conditions	Document in an evaluation/assessment.

3.4.1.3 HPH System Production Rates

Requirement: The HPH system shall support a production rate of 7.5 metric tons of glass (MTG) per day. [Sections 6.1.3, 6.3, 6.3.3, 6.11.1, BOD, ROIN: 40-19792, ROIN: 43-1328, ROIN: 1-40498, ROIN: 43-1354, ROIN: 43-1426, ROIN: 43-1440][Table C.7-1.1, C.7(b)(3), C.7(c) (9), C.7(c)(10), WTP Contract, ROIN: 43-663, ROIN: 1-25956, ROIN: 43-661, ROIN: 40-16063].

Basis Discussion: Each canister contains 3 MTG (Section 6.3.3, BOD) which leads to a throughput capacity of 2.5 canisters per day at 100% availability.

Verification: Verification is expected to be achieved through:

Verif. Method	Verif. By	Plan	Notes/Comments
A	ENG	Perform an analysis to determine the processing rate for HPH system.	
I	ENG	Review of design to ensure conformance to throughput requirement.	

3.4.1.4 Service (Operating) Life

Requirement: Except as noted in the table below, non-replaceable, permanent HPH plant equipment shall be designed for a minimum design life of 40 years, inclusive of maintenance. All non-maintainable items of HPH equipment shall be designed to last the life of the facility (40 years). Design life of in-cell/in-cave equipment shall consider the effects of chemical, radiological and thermal exposure. [Section C.7(a)(1), DOE/BNI Contract, ROIN: 1-25930] [Sections 11.1.1, 11.4.1, 11.7.4, 11.8.3, BOD, ROIN: 1-41120, ROIN: 1-41154, ROIN: 1-41121B, ROIN: 1-41210, ROIN: 1-41214][Sections 2, 14.1, 14.8, Appendix A, ORD, ROIN: 1-39819, ROIN: 8-3584, ROIN: 8-7839, ROIN: 2-49671].

Table 3-1 HPH Equipment and Components Design Life

Equipment/Component Description	Design Life (years)
Shield Doors and SPADs	40
Shield Hatches	40
Manipulator and Posting Port	40
Cranes (including hoists)	40
Bogies	40
Canister Buffer Rack	40
Canister Cooling Rack	40
Weld Station Carriage	40
Weld Station Table	40

Table 3-1 HPH Equipment and Components Design Life

Equipment/Component Description	Design Life (years)
Welder	10*

** This is a target design life value because this component is replaceable*

Basis Discussion: Equipment and material selection is based on proven performance, value engineering principles, and fit-for-function principles. The selection of equipment and materials is further addressed in detail as the design progresses. In-cell/in-cave equipment design considers the routine environmental exposures under normal operations for non-safety equipment; safety equipment also considers abnormal and emergency exposures – this minimizes the need for equipment maintenance, exposure and radiological waste generation in radiological areas. [ALARA]

Verification: Verification is expected to be achieved through:

Verif. Method	Verif. By	Plan	Notes/Comments
I	ENG	The "qualified" design life for safety SSCs is to be verified through review of equipment design as documented in equipment qualification packages.	Design life for safety equipment to be documented in EQPs and supplier certificates of conformance.
I	ENG	Review design to verify design life of non-replaceable, non-maintainable SSCs is documented in procurement documents and supported by supplier certificates of conformance.	Document in an evaluation/assessment.

3.4.1.5 Canister Transfers

Requirement: The HPH system shall provide the capability to perform the following canister transfers. [Section 11, WTP HLW Canister, ROIN: 45-9322] [Appendix A (line 65, 88, 92, 109, 124, 128, & 129), WAI Items & Activities, ROIN: 45-1725, ROIN: 45-1746, ROIN: 45-1760, ROIN: 45-1764]

- Receive empty canister from HRH to the canister handling cave through the canister receipt import hatch (A.1)
- Transfer empty canister from HRH into the canister handling cave buffer rack (A.2)
- Transfer empty canister from the storage rack to the pour tunnel bogie through the pour tunnel export hatch (A.3)
- Transfer empty canister to the melter pour spout (A.4)
- Transfer filled canister to pour tunnel hatch (A.6)
- Transfer filled canister to storage rack (A.11)
- Transfer filled canister to cooling rack (A.7, E.2)
- Transport filled canister to weld station (A.8, E.3)
- Transfer filled canister to buffer rack (A.13)
- Transfer filled canister to storage rack (A.22)
- Transfer filled canister to the HDH canister rinse bogie (A.23, E.6)
- Transfer filled canister from canister rinse bogie to system HDH (E.1)

Basis Discussion: None.

Verification: Verification is expected to be achieved through:

Verif. Method	Verif. By	Plan	Notes/Comments
I	ENG	Review design to ensure the capability to complete the canister transfers listed above.	
D	SU/ COM	Demonstrate the canister transfers listed above.	

3.4.1.6 Export Solid Waste

Requirement: System HPH shall provide the ability to remotely collect solid waste, including dislodged glass deposits, welding electrodes, vacuum filters, vacuumed debris, and used welder parts, in a waste basket and export the waste basket to system HSH. [Section 14.11, ORD, ROIN: 1-40076] (D.1, K.1, K.1.1, K.1.2, K.1.3, K.2, K.3)

Basis Discussion: System HPH utilizes tools including the canister handing crane, the weld station MSM, vacuum tool, waste basket and waste basket lid (includes lifting bail) to remotely export solid waste to system HSH.

Verification: Verification is expected to be achieved through:

Verif. Method	Verif. By	Plan	Notes/Comments
I	ENG	Review design to ensure capability to remotely collect and export solid waste to system HSH.	
D	SU/ COM	Demonstrate system HPH can remotely collect and export solid waste to system HSH.	

3.4.1.7 Seismic Design for Interaction Effects

Requirement: All permanently mounted HPH equipment not specified in Table 3-3 shall, at minimum, be designated Seismic Category-IV. Interaction effects shall be considered when determining the seismic category of individual items and, where an adverse seismic interaction with SC or SS equipment exists, adequate measures shall be taken to preclude the adverse interaction. [Criterion 4.1-3, SRD, ROIN: 1-38653] [Section 10.2.15, BOD, ROIN: 45-21847, ROIN: 45-21848].

Basis Discussion: In accordance with [GPG-ENG-033], equipment that is non-safety may be identified as having a potential for adverse interaction with safety equipment during a seismic event. Where a resolution strategy is selected to increase the seismic category of the source SSC to protect the safety (target) SSC, the resulting seismic category of the equipment may be greater than SC-IV. In those cases, the equipment design must be verified to meet the higher seismic performance category such that the target SSC is protected.

Verification: Verification is expected to be achieved through:

Verif. Method	Verif. By	Plan	Notes/Comments
I	ENG	Evaluate the HPH system for seismic interaction effects per 24590-WTP-GPG-ENG-033 and devise a control strategy for all open interactions.	Document in a Seismic Interaction List.

Verif. Method	Verif. By	Plan	Notes/Comments
A/T	ENG/SUP	Analysis or testing performed on SSCs to demonstrate the ability to withstand the seismic loadings for their respective seismic categories to the extent necessary to prevent interactions.	Documented in an Equipment Seismic Qualification (ESQ) Review Form or supplier seismic design report.
I	ENG	Review design to verify conformance to the as-tested/as-analyzed configuration.	

3.4.2 Nuclear Safety, ALARA, Environmental and Other Regulatory Requirements

3.4.2.1 Safety Designations

Requirement: [HOLD] The following SSCs shall be designated as safety SSCs [Safety Criterion 4.1-2, 4.1-3, 4.4-1, SRD, ROIN: 1-38650,] [Section 4.3.9.2, 4.4.1.2, 4.4.15.2, PDSA, ROIN: 40-2727, ROIN: 40-2728, ROIN: 40-2730, ROIN: 40-2722, ROIN: 40-2723, ROIN: 40-2724, ROIN: 40-2726, ROIN: 40-2729, ROIN: 40-2759, ROIN: 40-2760, ROIN: 45-9985] (I.1)

Table 3-2 HPH Safety Designations

Equipment/Component Description	Safety Function	Safety Classification	References
HPH-DOOR-00001, Vertical shield door canister handling cave crane decontamination area	Prevents or mitigates the exposure to direct radiation Mitigates consequences of an airborne release of radioactive material by providing an engineered air gap to maintain cascade airflow	SS	Section 4.4.1.2, P0DSA – HLW Facility
HPH-DOOR-00002, Vertical shield door bogie maintenance pour tunnel 1 area	Prevents or mitigates the exposure to direct radiation Mitigates consequences of an airborne release of radioactive material by providing an engineered air gap to maintain cascade airflow	SS	Section 4.4.1.2, PDSA – HLW Facility
HPH-DOOR-00003, Vertical shield door bogie maintenance pour tunnel 2 area	Prevents or mitigates the exposure to direct radiation Mitigates consequences of an airborne release of radioactive material by providing an engineered air gap to maintain cascade airflow	SS	Section 4.4.1.2, PDSA – HLW Facility

Equipment/Component Description	Safety Function	Safety Classification	References
HPH-DOOR-00004, Horizontal shield door canister handling cave crane decontamination area	Prevents or mitigates the exposure to direct radiation Mitigates consequences of an airborne release of radioactive material by providing an engineered air gap to maintain cascade airflow	SS	Section 4.4.1.2, PDSA – HLW Facility
HPH-DOOR-00005, Horizontal shield door canister handling cave crane maintenance area	Prevents or mitigates the exposure to direct radiation Mitigates consequences of an airborne release of radioactive material by providing an engineered air gap to maintain cascade airflow	SS	Section 4.4.1.2, PDSA – HLW Facility
HPH-DOOR-00008, Vertical shield door canister handling crane maintenance area	Prevents or mitigates the exposure to direct radiation Mitigates consequences of an airborne release of radioactive material by providing an engineered air gap to maintain cascade airflow	SS	Section 4.4.1.2, PDSA – HLW Facility
HPH-HTCH-00001, Hatch pour tunnel 1	Mitigates consequences of an airborne release of radioactive material by providing an engineered air gap to maintain cascade airflow	SS	Section 4.4.1.2, PDSA – HLW Facility
HPH-HTCH-00002, Hatch pour tunnel 2	Mitigates consequences of an airborne release of radioactive material by providing an engineered air gap to maintain cascade airflow	SS	Section 4.4.1.2, PDSA – HLW Facility
HPH-DOOR-00006, SPAD bogie maintenance pour tunnel 2 (12 in.) HPH-DOOR-00007, SPAD canister handling cave crane maintenance area (3 in.) HPH-DOOR-00009, SPAD bogie maintenance pour tunnel 1 (12 in.)	Mitigates the consequences of an airborne release to the public and/or co-located workers by providing a high-integrity confinement boundary evaluated for design basis accident (seismic and fire) conditions (SC function) Prevents or mitigates the exposure to direct radiation (SS Function)	SC SS	Section 4.3.4, 4.3.9.2, 4.4.1, PDSA – HLW Facility
HPH Canister Handling Bogie Interlock	Prevent facility structures outside the pour tunnel from experiencing abnormally high temperatures	SC	Section 4.3.15.2, PDSA – HLW Facility
HPH Posting Port Door-to-Door Interlock	Prevent a direct shine path through the posting port	SS **[HOLD]**	Section 4.4.22.2, PDSA – HLW Facility
HPH Posting Port Gamma Monitor-to-Door Interlock	Prevent inadvertent exposure to high or very high radiation sources	SS **[HOLD]**	Section 4.4.22.2, PDSA – HLW Facility

Equipment/Component Description	Safety Function	Safety Classification	References
Through Wall Drives: HPH-DRIV-00003, 00004	Mitigates the consequences of an airborne release to the public and/or co-located workers by providing a high-integrity confinement boundary evaluated for design basis accident (seismic and fire) conditions (SC function) Prevents or mitigates the exposure to direct radiation (SS Function)	SC SS	HLW PDSA Section 4.3.1, 4.3.4, 4.4.1.2
MSMs HPH-MANIP-00002, 00003, 00008, 00009, 00010, 00011, 00012, 00013, 00014, 00015	Mitigates the consequences of an airborne release to the public and/or co-located workers by providing a high-integrity confinement boundary evaluated for design basis accident (seismic and fire) conditions (SC function) Prevents or mitigates the exposure to direct radiation (SS Function)	SC SS	HLW PDSA Section 4.3.1, 4.3.4, 4.4.1.2
Horizontal Shield Door Recovery Plugs HPH-PLUG-00004, 00005	Mitigates the consequences of an airborne release to the public and/or co-located workers by providing a high-integrity confinement boundary evaluated for design basis accident (seismic and fire) conditions (SC function) Prevents or mitigates the exposure to direct radiation (SS Function)	SC SS	HLW PDSA Section 4.3.1, 4.3.4, 4.4.1.2
Through Wall Devices: HPH-TWDVC-00003, 00004, 00006, 00014, 00015, 00016, 00017, 00018	Mitigates the consequences of an airborne release to the public and/or co-located workers by providing a high-integrity confinement boundary evaluated for design basis accident (seismic and fire) conditions (SC function) Prevents or mitigates the exposure to direct radiation (SS Function)	SC SS	HLW PDSA Section 4.3.1, 4.3.4, 4.4.1.2
Bridge Beams for HPH-DOOR-00001, 00002, 00003, 00008	Mitigates the consequences of an airborne release to the public and/or co-located workers by providing a high-integrity confinement boundary evaluated for design basis accident (seismic and fire) conditions)	SC	HLW PDSA Section 4.3.1, 4.3.4

Equipment/Component Description	Safety Function	Safety Classification	References
Posting Port HPH-TWDVC-00009	Mitigates the consequences of an airborne release to the public and/or co-located workers by providing a high-integrity confinement boundary evaluated for design basis accident (seismic and fire) conditions (SC function) Prevents or mitigates the exposure to direct radiation (SS Function)	SC SS	HLW PDSA Section 4.3.1, 4.3.4, 4.4.1.2

Basis Discussion: To ensure safety SSCs meet the design functions, Safety Criterion 4.4-1 of the SRD states: "Safety structures, systems, and components designated as safety class and safety significant shall be designed and qualified to function as intended in the environments associated with the events for which they are intended to respond. The effects of aging on normal and abnormal functioning shall be considered in design and qualification." Posting port interlocks are on HOLD because, based on discussion in the Safety Design Strategy, the source of the requirement (HLW PDSA) is anticipated to be revised to remove the designation as a Safety Significant control, but the design features will still be required due to application of ALARA principals. [24590-WTP-ATS-MGT-15-0167] [ALARA]

Verification: Verification is expected to be achieved through:

Verif. Method	Verif. By	Plan	Notes/Comments
I	ENG	Verify that the safety classification(s) and function(s), as established in the PDSA/DSA are correctly reflected in the Equipment Qualification Datasheet (EQD), in supporting documentation in the EQP and, when applicable, in the Safety System Requirements Specification (SSRS)	May be accomplished by EQP and/or DVR.

3.4.2.2 Decontaminated Equipment Durability

Requirement: Equipment located inside the canister handling cave, pour tunnels, or their associated decontamination or maintenance areas, shall be designed to withstand decontamination without any reduction of functionality through degradation of the electrical, mechanical, or any other components involved. [Section 11.8.3.1, BOD, ROIN: 1-41215] [Sec 9.1, 14.16, ORD, ROIN: 8-8065, ROIN: 8-475]

Basis Discussion: Maintainable equipment operating in a contaminated environment is decontaminated prior to hands-on maintenance, and is able to withstand decontamination without reduction of functionality. Sealed bearings and motors are used on cranes to prevent degradation.

[ALARA]

Verification: Verification is expected to be achieved through:

Verif. Method	Verif. By	Plan	Notes/Comments
I	ENG	Review the HPH design to verify equipment in contaminated areas can withstand decontamination without degradation or reduction in equipment functionality.	Document in an evaluation/assessment. Plant Engineering to participate in or review evaluation/assessment.

3.4.2.3 Seismic Design

Requirement: Elements of the HPH system shall be designed for seismic conditions in accordance with Table 3-3 HPH Seismic Design Categories. [Section 4.3.9.2, 4.3.1, 4.3.1.2, 4.4.1.2, 4.4.22.4, HLW PDSA, ROIN: 40-2722, ROIN: 40-2725, ROIN: 40-2726, ROIN: 40-2727, ROIN: 40-2728, ROIN: 40-2729, ROIN: 40-2730, ROIN: 40-2759, ROIN: 40-2760, ROIN: 40-9672]

Table 3-3 HPH Seismic Design Categories

Component Tag No.	Description	Seismic Category	Reference
HPH-DOOR-00001	Vertical Shield Door canister handling cave crane decontamination area	SC-II	Section 4.4.1.2, PDSA - HLW Facility, ROIN: 40-2722
HPH-DOOR-00002	Vertical Shield Door bogie maintenance pour tunnel 1	SC-II	Section 4.4.1.2, PDSA - HLW Facility, ROIN: 40-2725
HPH-DOOR-00003	Vertical Shield Door bogie maintenance pour tunnel 2	SC-II	Section 4.4.1.2, PDSA - HLW Facility, ROIN: 40-2725
HPH-DOOR-00004	Horizontal Shield Door canister handling cave crane decontamination area	SC-II	Section 4.4.1.2, PDSA - HLW Facility, ROIN: 40-2725
HPH-DOOR-00005	Horizontal Shield Door canister handling cave crane maintenance area	SC-II	Section 4.4.1.2, PDSA - HLW Facility, ROIN: 40-2726
HPH-DOOR-00006	Shielded Personal Access Door (SPAD) bogie maintenance pour tunnel 2	SC-I	Section 4.3.9.2, PDSA - HLW Facility, ROIN: 40-2727
HPH-DOOR-00007	Shielded Personal Access Door (SPAD) canister handling cave maintenance area	SC-I	Section 4.3.9.2, PDSA - HLW Facility, ROIN: 40-2728
HPH-DOOR-00008	Vertical Shield Door canister handling crane maintenance area	SC-II	Section 4.4.1.2, PDSA - HLW Facility, ROIN: 40-2729
HPH-DOOR-00009	Shielded Personal Access Door (SPAD) bogie maintenance poor tunnel 1	SC-I	Section 4.3.9.2, PDSA - HLW Facility, ROIN: 40-2730

Component Tag No.	Description	Seismic Category	Reference
HPH-HTCH-00001	Hatch pour tunnel 1	**SC-II**	Section 4.4.1.2, PDSA - HLW Facility, ROIN: 40-2759
HPH-HTCH-00002	Hatch pour tunnel 2	**SC-II**	Section 4.4.1.2, PDSA - HLW Facility, ROIN: 40-2760
HPH-MHAN-00014	Canister cooling rack	**SC-II**	Section 4.4.10, PDSA - HLW Facility, ROIN: 40-9672
HPH-MHAN-00017	Canister buffer rack	**SC-II**	Section 4.4.10, PDSA - HLW Facility, ROIN: 40-9672
HPH-DRIV-00003, 00004	*Through wall drives	**SC-I**	Sections 4.3.1, 4.3.1.2, PDSA HLW Facility, ROIN: 1-21507, ROIN: 1-21509
HPH-MANIP-00002, 00003, 00008, 00009, 00010, 00011, 00012, 00013, 00014, 00015	*MSMs	**SC-I**	Sections 4.3.1, 4.3.1.2, PDSA HLW Facility, ROIN: 1-21507, ROIN: 1-21509
HPH-PLUG-00004, 00005	*Plugs	**SC-I**	Sections 4.3.1, 4.3.1.2, PDSA HLW Facility, ROIN: 1-21507, ROIN: 1-21509
HPH-TWDVC-00003, 00004, 00006, 00014, 00015, 00016, 00017, 00018	*Through wall devices	**SC-I**	Sections 4.3.1, 4.3.1.2, PDSA - HLW Facility, ROIN: 1-21507, ROIN: 1-21509
Bridge Beams for HPH-DOOR-00001 HPH-DOOR-00002 HPH-DOOR-00003 HPH-DOOR-00008	*Mounting supports for shield doors	**SC I**	Section 4.4.1.2, PDSA HLW Facility, ROIN: 40-2722
HPH-TWDVC-00009 Interlocks	** Door-to-door interlock and Gamma monitor interlock with the out-cave shield door.	**SC-III**	Section 4.4.22.4, PDSA – HLW Facility, ROIN: 45-32044, ROIN: 45-32045
HPH-RCVY-00007, 00009	Canister Handling Cave Crane Cable Reel through wall penetrations	**SC-I**	Sections 4.3.1, 4.3.1.2, PDSA HLW Facility, ROIN: 1-21507, ROIN: 1-21509

* For items in penetrations through the C5V boundary, the attribute(s) of the component necessary to keep the item in the penetration and to ensure the body of the item does not fail are SC-I. (Section 4.3.1.2, PDSA – HLW Facility).

** Interlocks consist of sensors, logic solvers, relays, and associated wiring and equipment.

Basis Discussion: Section 2.4.12 of 24590-WTP-PSAR-ESH-01-002-01, *Preliminary Documented Safety Analysis to Support Construction Authorization; General Information* (PDSA – General) states the following:

> "All components and parts of the equipment that provide or contribute to the safety functions and accident monitoring functions, including equipment supports and anchorage, shall be qualified accordingly."

This qualification ensures SSCs meet the designated seismic design requirements. The 24590-WTP-SRD-ESH-01-001-02, *Safety Requirements Document Volume II* (SRD), Safety Criterion 4.1-3 details the equivalence of the WTP seismic category to the seismic performance category of DOE-STD-1020-94, *Natural Phenomena Hazards Design and Evaluation Criteria for Department of Energy Facilities*. The SRD also states that SSCs designated as safety SSCs be designed to withstand the effects of natural phenomena hazards events (e.g., earthquakes, wind, and floods) without loss of capability to perform specified safety functions

Verification: Verification is expected to be achieved through:

Verif. Method	Verif. By	Plan	Notes/Comments
A/T	**ENG/SUP**	Analysis or testing performed on safety SSCs to verify capability to withstand seismic event.	This is expected to be documented in the EQPs. EQPs will be prepared for all safety components. See the latest revision of 24590-WTP-PD-ENG-0001, Equipment Qualification Program Description, for additional information, including independent peer review of seismic evaluation of the applicable SSCs (WTP and supplier-supplied) in accordance with the requirements of DOE-STD-1020-94, Natural Phenomena Hazards Design and Evaluation Criteria for Department of Energy Facilities.
I	**ENG**	Review of design of safety SSCs to ensure conformance to the results of the analysis or testing.	May be accomplished by EQP or separate evaluation/assessment.

3.4.3 System Interface Requirements

Requirements associated with specific system interfaces are discussed in the subsequent requirement sections titled "System Interface Requirements." System interfaces are further described in section 4.1.2.

3.4.4 Other Technical, Specialty, Operations and Maintenance Requirements

3.4.4.1 Remote Equipment/Component Maintenance and Replacement

Requirement: Maintainable or replaceable equipment and components located in the canister handling cave shall be designed with remote handling features that enable remote removal and reinstallation (including the ability to disconnect and reconnect support utilities, as applicable), and allow transportation between their installed location and their designated maintenance, storage, or disposal location. [Sections 5.2, 6.2, 8.1.3, 9.1, 9.2, 14.1, 14.8, 14.16, 20, ORD, ROIN: 1-39930, ROIN: 1-39932, ROIN: 8-2771, ROIN: 8-4350, ROIN: 1-39963, ROIN: 1-39969, ROIN: 8-9095A, ROIN: 8-9095B, ROIN: 8-3584, ROIN: 8-4340, ROIN: 8-4350, ROIN: 8-4337][Sections 11.3.2, 11.3.2.2, 11.4.1, 11.8.3.1, BOD, ROIN: 1-41132, ROIN: 1-41133, ROIN: 1-41134, ROIN: 1-41136, ROIN: 1-41148, ROIN: 1-41153, ROIN: 1-41155, ROIN: 1-41215, ROIN: 1-41151, ROIN: 2-43150, ROIN: 2-43151] [Appendix A (line 80), WAI Items and Activities, ROIN: 45-1717] (L.1, M.1)

Table 3-4 Remotely Replaceable/Maintainable Equipment/Components

Equipment/Component Description	Remote Removal and Replacement
Posting Port In-Cave Shield Door	Yes

Equipment/Component Description	Remote Removal and Replacement
Pour Tunnel Hatch Cover	Yes
Pour Tunnel Bogie Canister Sleeves	Yes
Master Slave Manipulators slave arm	Yes
Lid Welder Torch Body	Yes
Lid Welder Wire Feed Assembly	Yes
Pneumatic Needle Descaler	Yes
In-Cave Cameras	Yes
Wall-Mounted Lighting	Yes
Weld Station Vacuum Unit	Yes
Canister Lid Welders	Yes
Weld Station Table	Yes
Canister Flange Conditioning Tool	Yes
Weld Station Carriages	Yes
Canister Cooling Rack and Buffer Rack (subsections)	Yes
Canister Handling Cave Import Hatch Cover	Yes
Canister Handling Cave Export Hatch Cover	Yes
Shield Window Impact Barrier	Yes
Weld Station Lid Weight	Yes

Basis Discussion: Remote maintenance operations are generally to be performed in the designated maintenance area. In-cave equipment disassembly, removal to maintenance area, and/or replacement is accomplished by local remote handling equipment or by remote handling equipment in dedicated maintenance areas or caves. In general, process systems and equipment within cells or caves that could fail during operations are designed for safe recovery, replacement, or redundancy. Remote handling features help to facilitate interfacing with equipment or components when using remote handling equipment such as by in-cave cranes, power manipulators, or master-slave manipulators. [ALARA]

Verification: Verification is expected to be achieved through:

Verif. Method	Verif. By	Plan	Notes/Comments
I	ENG	Review of design to verify that all replaceable components are remotable	Document in an evaluation/assessment. Recommend using a software program such as "IGrip" (or similar).
D	SU/ COM	Demonstrate remotability in accordance with 24590-WTP-PL-RACT-RT-0001, *WTP Remotability Verification Plan*.	Physical demonstration

3.4.4.2 Decontamination

Requirement: System HPH shall provide means to decontaminate equipment, including the canister handling cave cranes, with CO_2, pressurized warm water, detergent solution, or steam. [Section 11.8.3.1, BOD, ROIN: 2-43152][Section 14.16, ORD, ROIN: 8-4688, ROIN: 8-474](K.1).

Basis Discussion: None.

[ALARA]

Verification: Verification is expected to be achieved through:

Verif. Method	Verif. By	Plan	Notes/Comments
I	ENG	Review design to verify HPH equipment, facility equipment, or a combination thereof, is provided to perform crane and equipment decontamination, and that the necessary support utilities are available.	Document in an evaluation/assessment. Plant Eng and Rad Eng to participate in and/or review the evaluation/assessment.

3.4.4.3 Viewing Operations

Requirement: Cameras and/or shield windows shall provide viewing capabilities to assist in remote HPH mechanical handling operations. [Sections 11.5, 12.4, 14.16, ORD, ROIN: 8-9102, ROIN: 8-14259, ROIN: 1-40045, ROIN: 8-468, ROIN: 8-14269, ROIN: 8-14261](G.1, J.1.2, I.1).

Basis Discussion: Cameras for viewing operations should be placed to give optimum viewing angles and distance to suit the operations. These operations include but are not limited to: all canister transfers, including those performed with bogies, visual inspection of the canister, and swabbing operations. CCTV monitoring will be included in the control room and at the cave face when the operations are not visible from the cave face. See requirement for controls requirements for the mechanical handling operations.

The cameras and shield windows provide for viewing of remote operations noted in Sections 3.4.4.1 and 3.10.1.1. As such, adequate viewing may be demonstrated as part of the verification by demonstration for remote operation of the HPH equipment.
[ALARA]

Verification: Verification is expected to be achieved through:

Verif. Method	Verif. By	Plan	Notes/Comments
I	ENG	Review design to confirm that the remote cameras and shield windows provide viewing which assists operators with remote HPH mechanical handling operations.	Recommend using a software program such as "IGrip" (or similar).

3.4.4.4 Remote Equipment Dimensional Records

Requirement: **[HOLD]** Systems and equipment requiring remote installation and maintenance shall have tolerances specified in their design and be as-built with sufficient precision to provide for the ability to remotely install, connect, disconnect, and reconnect all replaceable components. [Section 14.10, ORD, ROIN: 1-40075]

Basis Discussion: As-built documentation of remote equipment and permanent plant interfaces for the remote equipment provides the ability to remotely install, connect, disconnect, and reconnect all replaceable components. This dimensional records program is important to fabrication of replacement parts that are to be installed remotely. This requirement is on HOLD pending an operations requirements document change notice (ORDCN) [24590-WTP-ATS-MGT-15-0084]. [ALARA]

Verification: Verification is expected to be achieved through the following:

Verif. Method	Verif. By	Plan	Notes/Comments
I	ENG	Review HPH as-built drawings for remotely replaceable components to verify conformance with dimensional record requirements.	Document in an evaluation/assessment. **Note**: Final in-plant fit-up may be required prior to finalizing dimension records (as-built drawings) for remotely replaceable components.

3.4.4.5 Maintainable Equipment Location

Requirement: Maintainable HPH equipment listed below shall be located in an area where contact maintenance is possible. [Section 7.1, ORD, ROIN: 9-58][Section 11.4.1, 11.8.3.1, BOD, ROIN: 2-43161, ROIN: 2-43165, ROIN: 1-41149] (M.1)

- Motors for shield doors: HPH-DOOR-00001, 00002, 00003, 00004, 00005, 00008
- MSM master arms: HPH-MANIP-00002, 00003, 00008, 00009, 00010, 00011, 00012, 00013, 00014, 00015
- Posting port actuators and instruments: HPH-TWDVC-00009
- Motors for locking bolts: HPH-TWDVC-00003, 00004, 00015, 00016
- Crane cable reeling system: HPH-RCVY-00007, 00008
- Motors for Hatches: HPH-HTCH-00001, 00002
- Pour tunnel bogie drive systems: HPH-DRIV-00001, 00002, 00005, 00006

Basis Discussion: Components of equipment that require a high degree of maintenance or service should be located in an area where personnel have access for hands-on maintenance activities.

[ALARA]

Verification: Verification is expected to be achieved through:

Verif. Method	Verif. By	Plan	Notes/Comments
I	ENG	Review of design to ensure that the listed maintainable equipment is located outside the canister storage cave or cask handling bogie tunnel.	

3.4.4.6 Emergency Stop Buttons

Requirement: In accordance with 29 CFR 1910 (OSHA), the following equipment shall include an emergency stop or equivalent disconnect located in an accessible area near the equipment. [Section 7.3.9.1, 11.5.1, BOD, ROIN: 1-40683, ROIN: 8-3757][Section 11.12.5.3, ORD, ROIN: 1-40021, ROIN: 8-8287].

- Canister Handling Cave Upper Crane – HPH-CRN-00002
- Canister Handling Cave Lower Crane –HPH-CRN-00001
- Canister Handling Maintenance Crane – HPH-CRN-00009
- Pour Maintenance Crane, Pour Tunnel 1 – HPH-CRN-00012
- Pour Maintenance Crane, Pour Tunnel 2 – HPH-CRN-00013

Basis Discussion: Emergency stops are included when personnel are in the area of operating equipment. At these times, an operator will be near the equipment so an emergency stop will be included.

Verification: Verification is expected to be achieved through:

Verif. Method	Verif. By	Plan	Notes/Comments
I	ENG	Review HPH design for incorporation of emergency stops on equipment bulleted above.	ES&H to participate in the evaluation/assessment and/or review the evaluation/assessment.
D	SU/COM	Demonstrate the capability to stop listed equipment using the equipment's dedicated emergency stop.	

3.4.4.7 Emergency Stop Reporting

Requirement: Equipment emergency stops shall provide a status signal and remain in a shut-down state until the circuit is physically reset. Emergency stops on equipment connected to the MHJ provide a status signal to the MHJ. Emergency stops on equipment with no MHJ connection provide a status signal for a local indicator. [Section 7.3.9.1, BOD, ROIN: 1-40684][Section 11.12.5.3, ORD, ROIN: 8-8287]

Basis Discussion: None.

Verification: Verification is expected to be achieved through the following:

Verif. Method	Verif. By	Plan	Notes/Comments
I	ENG	Review design to verify emergency stops provide the appropriate status signal, based on parent equipment MHJ connectivity, and remain in a shutdown state until the circuit is physically reset.	
D	SU/ COM	Demonstrate emergency stop reporting and reset functions.	

3.4.4.8 Waste Acceptance Impacting Items

Requirement: System HPH items that have been designated WAI shall be capable of meeting their respective WAI design and functional requirements (see Table 3-5 Waste Acceptance Inspecting Item Designations). [Section 3, 8.3, *WTP HLW Canister*, ROIN: 45-9331, ROIN: 45-9332, ROIN: 45-9333, ROIN: 45-9334, ROIN: 45-9336, ROIN: 45-9337, ROIN: 45-9338, ROIN: 45-9339, ROIN: 45-9343, ROIN: 45-9344, ROIN: 45-9345, ROIN: 45-9351, ROIN: 45-9352, ROIN: 45-9353][Appendix A (line 80), (line 111), (line 15), (line 156), (line 203), (line 206), (line 208), (line 209), (line 210) WAI Items and Activities, ROIN: 45-1713, ROIN: 45-1718, ROIN: 45-1748, ROIN: 45-1838, ROIN: 45-1841, ROIN: 45-1843, ROIN: 45-1844, ROIN: 45-1845]

Table 3-5 Waste Acceptance Inspecting Item Designations

Item Description	Component Tag Number	WAI Designation
Canister Handling Cave Crane (lower)	24590-HLW-MJ-HPH-CRN-00001	Passive
Canister Handling Cave Crane (upper)	24590-HLW-MJ-HPH-CRN-00002	Passive
Canister Lid Welder (East)	24590-HLW-HC-HPH-WELD-00004	Passive, Performance
Canister Lid Welder (West)	24590-HLW-HC-HPH-WELD-00010	Passive, Performance
Canister Flange Cleaner	24590-HLW-FH-HPH-TOOL-00003	Passive
Glass Removal Tool	24590-HLW-FH-HPH-TOOL-00005	Passive
Canister Flange Conditioning Tool	24590-HLW-FH-HPH-TOOL-00007	Passive
Pour Tunnel 1 Bogie Canister Sleeve (east)	24590-HLW-MH-HPH-TRLY-00006	Passive
Pour Tunnel 1 Bogie Canister Sleeve (west)	24590-HLW-MH-HPH-TRLY-00007	Passive
Pour Tunnel 2 Bogie Canister Sleeve (east)	24590-HLW-MH-HPH-TRLY-00012	Passive
Pour Tunnel 2 Bogie Canister Sleeve (west)	24590-HLW-MH-HPH-TRLY-00013	Passive
Canister Weld Station Table	24590-HLW-MZ-HPH-BENCH-00004	Passive
Canister Grapple (lower crane)	24590-HLW-FH-HPH-TOOL-00001	Passive, Performance
Canister Grapple (upper crane)	24590-HLW-FH-HPH-TOOL-00017	Passive, Performance
Canister Grapple (spare)	24590-HLW-FH-HPH-TOOL-00018	Passive, Performance
Canister Cooling Rack	24590-HLW-MH-HPH-MHAN-00014	Passive
Canister Buffer Rack	24590-HLW-MH-HPH-MHAN-00017	Passive

Basis Discussion: Design requirements for the IHLW canister grapple are provided in the 24590-HLW-3ZD-HRH-00001, *HLW Canister Receipt Inspection System Design Description.*

Verification: Verification is expected to be achieved through:

Verif. Method	Verif. By	Plan	Notes/Comments
I/T	**ENG/SUP**	Complete design document reviews, surveys, inspections, and tests as detailed in issued WAI Item Qualification Plans (WIQP).	
I/T	**SU/COM**	Complete design document reviews, surveys, inspections, and tests as detailed in issued WAI Item Qualification Plans (WIQP).	Verification methods and responsibilities detailed in WIQPs.

3.5 Cranes

3.5.1 Mission and Functional / Performance Requirements (incl. states/modes)

3.5.1.1 Codes and Standards

Requirement: [HOLD] In-cell bridge cranes shall be designed per CMAA 70 and ASME-NOG-1 as applicable. [Section 11.8.1, BOD, ROIN: 8-8061].

Basis Discussion: In-cell bridge cranes will be designed per CMAA 70, unless a safety function that can be addressed by ASME NOG-1 is identified during the control selection process. In that case, applicable sections of ASME-NOG-1 will be applied as necessary (Section 11.8.1, BOD). This requirement is on "HOLD" pending the resolution of condition report 24590-WTP-GCA-MGT-15-00137. [24590-WTP-ATS-MGT-15-0169]

Verification: Verification is expected to be achieved through:

Verif. Method	Verif. By	Plan	Notes/Comments
I	ENG	Review of supplier designs of HPH cranes to verify adherence to applicable codes and standards.	Document in an evaluation/assessment

3.5.1.2 Lifting Capacity

Requirement: System HPH cranes shall be designed with sufficient capacity to lift the following items, in conjunction with applicable lifting beams or apparatus: [Section 11.8.3.1, BOD, ROIN: 2-43145]

- Canister Handling Cave Process Crane
  - Filled IHLW canister, with canister grapple
  - Canister buffer rack section
  - Canister cooling rack section
  - In-cave light, with light removal tool
  - Canister handling cave import hatch
  - Canister handling cave export hatch
  - Pour tunnel hatch
  - In-cave portable vacuum
  - Pour tunnel bogie sleeves
  - Canister flange conditioning tool
  - MSM slave arm, with slave arm removal tool
- Crane Maintenance Area Jib Cranes (East and West)
  - Canister handling cave crane component modules
  - CMA floor plugs
  - Canister handling cave crane cable reel components

Basis Discussion: Cranes are designed with sufficient capacity to complete the heaviest anticipated lift to support operations, maintenance and repair activities over the life of the facility.

Verification: Verification is expected to be achieved through:

Verif. Method	Verif. By	Plan	Notes/Comments
A	ENG	Perform analysis to determine heaviest required lift for each crane.	
I	ENG	Review of crane design to verify crane capacity meets or exceeds the heaviest required lift.	Recommended to include in factory acceptance tests. Document in an evaluation/assessment.

3.5.1.3 Crane Recovery

Requirement: The design shall provide a means to remotely recover the canister handling cave cranes to a maintenance area. Recovery features are provided to safely offload a suspended canister, prior to removing the crane from the canister handling cave. [Sections 11.3.2, 11.4.1, 11.8.3.1, BOD, ROIN: 1-41132, ROIN: 1-41133, ROIN: 1-41134, ROIN: 1-41136, ROIN: 1-41151, ROIN: 2-43150, ROIN: 2-43151, ROIN: 1-41215][Sections 9.1, 14.1, 14.16, ORD, ROIN: 8-4350, ROIN: 8-3584, ROIN: 8-485, 8-472, ROIN: 8-481]. (L.1, M.2)

Basis Discussion: None [ALARA]

Verification: Verification is expected to be achieved through:

Verif. Method	Verif. By	Plan	Notes/Comments
I	ENG	Review design for means to recover the canister handling cave cranes to the maintenance area, including the ability to safely offload a suspended canister.	Document in an evaluation/assessment report
D	SU/ COM	Demonstrate recovery capability in accordance with test plans developed by the Commissioning Remote Handling work group per 24590-WTP-PL-RACT-RT-0001.	

3.5.1.4 Modular Crane Components

Requirement: The HPH cranes, hoists, and crane cable reels shall include modular, separable components for ease of maintenance/replacement. This consists of the following: [Section 11.8.3.1, BOD, ROIN: 2-43147] [Section 14.16, ORD, ROIN: 1-40089, ROIN: 8-480] (M.1.1)

- Wheel assemblies
- Hoist gear boxes, motors, and brakes
- Trolley gear boxes, motors, and brakes
- Bridge gear boxes, motors, and brakes
- Cable reel enclosure and cassette

Basis Discussion Motors, gear reducers, and wheel bearings subject to failure are located and mounted such that they can be replaced by one or two personnel working from the bridge, trolley, scissors lift, or scaffolding using an overhead maintenance crane as necessary. This is to be done by minimizing shimming and alignment of motors and gear boxes. [ALARA]

Verification: Verification is expected to be achieved through the following:

Verif. Method	Verif. By	Plan	Notes/Comments
I	ENG	Review equipment design to verify the use of modular components.	Document in an evaluation/assessment. Plant Engineering to participate in or review the evaluation/assessment.

3.5.1.5 Range of Motion

Requirement: The Canister Handling Cave cranes shall be designed with sufficient range of motion to perform the following activities, in conjunction with applicable lifting beams or apparatus: [Section 11.8.3.1, BOD, ROIN: 2-43145]

- Remove/reinstall the sleeve from each pour tunnel bogie, and transfer it to/from a sleeve park stand inside the canister handling cave
- Remove/reinstall the hatch covers for the pour tunnel hatches, canister handling cave import hatch and canister handling cave export hatch, and transport each cover to/from the crane decontamination area
- Remove/reinstall all sections of the canister cooling rack and canister buffer rack
- Remove/reinstall the posting port in-cave shield door
- Remove/reinstall wall-mounted lights in the canister handling cave
- Remove/reinstall MSM slave arms for all canister handling cave MSMs
- Remove/reinstall both canister lid welders and weld station carriages
- Transport the canister flange conditioning tool between its storage location and a canister positioned in either weld station
- Transport a glass sample vial carrier between the weld station and the crane decontamination area
- Remove/reinstall the weld station vacuum unit and solid waste basket, transfer a lidded waste basket into the waste transfer container, and transfer the waste transfer container to/from a pour tunnel bogie
- Remove/reinstall the weld station table

Basis Discussion: Supports remote maintenance, operations, and disposal of solid secondary waste. [ALARA]

Verification: Verification is expected to be achieved through:

Verif. Method	Verif. By	Plan	Notes/Comments
A	ENG	Review design to verify cranes provide adequate range of motion to support removal, reinstallation, and transportation of in-cave equipment	Document in an assessment
D	SU/ COM	Demonstrate remotability in accordance with 24590-WTP-PL-RACT-RT-0001, *WTP Remotability Verification Plan*.	Physical demonstration.

3.5.2 Nuclear Safety, ALARA, Environmental and Other Regulatory Requirements

3.5.2.1 ALARA Inspection Area

Requirement: Access areas that meet ALARA criteria and are equipped with fixed ladders or stair access and catwalks or platforms shall be provided in the crane maintenance area to enable inspection and maintenance,

without unsafe interferences, of all critical crane components. [Sections 9.1, 14.16, ORD, ROIN: 8-8074, ROIN: 8-494, ROIN: 8-485][Section 11.8.3.1, BOD, ROIN: 2-43150].

Basis Discussion: Platforms and catwalks are provided in the crane maintenance area to inspect and perform maintenance operations on the HPH cranes.

[ALARA]

Verification: Verification is expected to be achieved through:

Verif. Method	Verif. By	Plan	Notes/Comments
I	ENG	Review the crane inspection area to verify ALARA design principles are implemented in the design.	Document in an evaluation/assessment. Radiological and plant engineering to participate in and / or review the evaluation/assessment.

3.5.3 System Interface Requirements

3.5.3.1 None

3.5.4 Other Technical, Specialty, Operations and Maintenance Requirements

3.5.4.1 Limited Automation

Requirement: The HPH canister handling cave cranes shall be designed for control by manual mode at the facility control rooms or at operator control stations at the cave face, through the MHJ, with no automated programming. [Sections 11.5, 14.1, 14.16, ORD, ROIN: 1-39993, ROIN: 8-3586, ROIN: 8-470, ROIN: 8-487, ROIN: 8-9097, ROIN: 8-9098][Sections 7.3.5.2, 7.3.5.3, BOD, ROIN: 1-40655, ROIN: 1-40658]. (G.1, J.1.2, I.1).

Basis Discussion: The HPH canister handling cave cranes are non-automated mechanical handling equipment.

Verification: Verification is expected to be achieved through:

Verif. Method	Verif. By	Plan	Notes/Comments
I	ENG	Review HPH design to verify the canister handling cave cranes operate only in manual or local mode with no automated operations.	

3.5.4.2 Crane Brakes

Requirement: Brakes on hoists and all cranes drive functions shall be set when power is off. [Section 14.16, ORD, ROIN: 8-478][Section 11.8.3.1, BOD, ROIN: 2-43153].

Basis Discussion: None.

Verification: Verification is expected to be achieved through:

Verif. Method	Verif. By	Plan	Notes/Comments
I	ENG	Review design to ensure brakes are set when crane power is off.	Recommend to include in factory acceptance tests.
D	SU/ COM	Demonstrate that crane brakes are set when crane power is off.	

3.5.4.3 Crane Lighting

Requirement: Lights shall be mounted on the upper and lower canister handling cranes to illuminate the working area below. [Section 14.16, ORD, ROIN: 8-479][Sections 8.6.1.1, 8.6.1.3, 11.8.3.1, BOD, ROIN: 1-40822, ROIN: 1-40829, ROIN: 2 43153]

Basis Discussion: Adequate lighting for in-cave (C3, C5) and other operations areas complies with the requirements of Illuminating Engineering Society of North America (IESNA) Standard RP-7. [ALARA]

Verification: Verification is expected to be achieved through:

Verif. Method	Verif. By	Plan	Notes/Comments
I	ENG	Review design documentation to verify lights are mounted on the canister handling cave cranes to illuminate the area below the cranes.	
T	SU/ COM	Measure illumination levels below the cranes to verify that combined crane/facility lighting complies with IESNA Standard RP-7.	

3.5.4.4 Lubrication Systems

Requirement: Cranes shall include accessible lubrication systems for ease of maintenance. [Section 14.16, ORD, ROIN: 8-486][Section 11.8.3.1, BOD, ROIN: 2-43153]

Basis Discussion: To provide access for maintenance, the lubrication systems on the cranes are accessible to personnel through use of permanently installed catwalks and work platforms, without disassembly of equipment. [ALARA]

Verification: Verification is expected to be achieved through:

Verif. Method	Verif. By	Plan	Notes/Comments
I	ENG	Review crane design for incorporation for accessible lubrication systems.	

3.5.4.5 Quick Connectors

Requirement: The HPH crane modules shall have quick connectors on flying leads to allow rapid reconnection of cabling or other services. [Section 14.16, ORD, ROIN: 8-469][Section 11.8.3.1, BOD, ROIN: 2-43147].

Basis Discussion: None.

[ALARA]

Verification: Verification is expected to be achieved through:

Verif. Method	Verif. By	Plan	Notes/Comments
I	ENG	Review crane design for incorporation of quick connectors.	

3.5.4.6 Process Crane Interference

Requirement: Maintenance cranes shall be designed and installed such that there is no interference with normal operations of the process cranes. [Section 14.16, ORD, ROIN: 8-471][Section 11.8.3.1, BOD, ROIN: 2-43149].

Basis Discussion: This applies to all HPH maintenance cranes

Verification: Verification is expected to be achieved through:

Verif. Method	Verif. By	Plan	Notes/Comments
I	ENG	Review design to ensure maintenance cranes will not interfere with normal process crane operation.	

3.5.4.7 Standardized Operator Controls

Requirement: Control units for the HPH cranes shall be standardized with similar mechanical handling control units facility-wide. [Section 14.16, ORD, ROIN: 8-473]

Basis Discussion: Standardized operator controls are provided as much as possible to avoid errors that might occur when moving from one crane to another. Differences to accommodate specialized crane operations (e.g., power manipulator operation) are acceptable.

Verification: Verification is expected to be achieved through the following:

Verif. Method	Verif. By	Plan	Notes/Comments
I	ENG	Review the design to verify standardized control units are provided.	Document in an evaluation/assessment.

3.5.4.8 Off-Board Logics

Requirement: The canister handling cave cranes shall have no on-board logic, and all power and signal cables shall be marshalled off-board. [Section 14.16, ORD, ROIN: 8-470]

Basis Discussion: None. [ALARA]

Verification: Verification is expected to be achieved through the following:

Verif. Method	Verif. By	Plan	Notes/Comments
I	ENG	Review design to verify power and signal signals are marshalled off the cranes, and devices that execute crane control logic are located off the crane.	Document in an evaluation/assessment.

3.5.4.9 Leakage

Requirement: Drip trays shall be located under gearboxes on the canister handling cave cranes that prevent leaked oil from entering a canister. Drip tray capacity shall be, at minimum, 1.5 times the gearbox capacity. [Key Attributes for Design Table, WAI Qualification Plan for HLW Crane Drip Trays, ROIN: 45-37348] [Appendix A (line 111), WAI Items & Activities, ROIN: 45-1748] [Section 8.1.4, WTP HLW Canister, ROIN: 40-23831]

Basis Discussion: None.

Verification: Verification is expected to be verified through:

Verif. Method	Verif. By	Plan	Notes/Comments
I	ENG	Review design to verify the presence and capacity of drip trays on the canister handling cave cranes.	Ref. WAI Qualification Plan for Canister Import Hoist
D	SUP	Demonstrate drip trays on canister handling cave cranes hold 1.5 times the normal oil volume of their associated gearboxes.	

3.6 Bogie Requirements

3.6.1 Mission and Functional / Performance Requirements (incl. states/modes)

3.6.1.1 Backup/Recovery

Requirement: The HPH system shall include backup/recovery provisions to remotely recovery the pour tunnel bogies under maximum load. [Section 7.1, ORD, ROIN: 8-3582] (M.2)

Basis Discussion: Remote recovery occurs when a bogie fails inside the pour cave and concludes with the bogie positioned at its maintenance/repair station inside the bogie maintenance area. If the bogie is carrying a canister, recovery pauses at the pour tunnel hatch to allow the canister and canister sleeve to be removed from the bogie.

Verification: Verification is expected to be achieved through:

Verif. Method	Verif. By	Plan	Notes/Comments
I	ENG	Review of the design to verify the capability to remotely recover the loaded bogie.	
D	SU/ COM	Demonstrate recovery in accordance with 24590-WTP-PL-RACT-RT-0001, *WTP Remotability Verification Plan.*	

3.6.1.2 Scratch/Scuff Marks

Requirement: The Pour Tunnel Bogie shall be designed to ensure the product canisters do not become scratched or scuffed during loading or unloading into the bogie canister sleeves.. [Part B, WAI Item Qualification Plan for HLW Standardized Bogies, ROIN: 54-3898]

Basis Discussion: Parts should not be designed in such a way that the canister could be damaged as it is loaded into, or removed from the bogie.

Verification: Verification is expected to be achieved through:

Verif. Method	Verif. By	Plan	Notes/Comments
I	SUP	Review bogie canister sleeve design to verify HLW canisters will not be scratched or scuffed while being loaded into, or unloaded from, the bogie.	

3.6.1.3 Surface Finish

Requirement: The guides shall be profiled and have a smooth surface finish to reduce scratching to a minimum. The Bogie cylindrical Sleeves and the Sleeve guides shall be set to an internal diameter of 27 +/- ¼ inch. [Part B, WAI Item Qualification Plan for HLW Standardized Bogies, ROIN: 54-3898]

Basis Discussion: The guides are profiled to minimize the potential for damage and scoring of the HLW Canisters.

Verification: Verification is expected to be achieved through:

Verif. Method	Verif. By	Plan	Notes/Comments
I	ENG	Review design to verify bogie cylindrical sleeves and the canister sleeve guides have an internal diameter of 27 +/- ¼ inch.	Ref. WAI Qualification Plan for Canister Rinse Bogie Decontamination Vessel and WAI Qualification Plan for HLW Standardized Bogies

3.6.1.4 Modular Bogie Components

Requirement: The HPH pour tunnel bogie shall include modular, separable components for ease of maintenance/replacement. This consists of the following: [Section 11.8.3.1, BOD, ROIN: 2-43155] [Section 7.1, ORD, ROIN: 8-6578] (M.1.2)

- Wheel assemblies
- Gear boxes, motors, and brakes

Basis Discussion: Motors, gear reducers and wheel bearings subject to failure shall be located and mounted such that they can be replaced by personnel using an overhead maintenance crane as necessary. This is to be done by minimizing shimming and alignment of motors and gear boxes. [ALARA]

Verification: Verification is expected to be achieved through:

Verif. Method	Verif. By	Plan	Notes/Comments
I	ENG	Review equipment design to verify the use of modular components.	Document in an evaluation/assessment. Plant Engineering to participate in or review the evaluation/assessment.

3.6.1.5 Minimum Glass Fill Height

Requirement: The pour tunnel bogie and bogie sleeve design shall facilitate infrared monitoring of canister exterior temperatures during the glass pour process. [Section 6.5.3, WTP HLW Canister Processing Activities] [WAI Items and Activities, ROIN: 45-1782]. (A.12)

Basis Discussion: The pour tunnel bogie sleeves allow for monitoring of the glass fill height by System HMP glass fill-level infrared cameras located in the wall of the pour tunnels adjacent to the shield windows.

Verification: Verification is expected to be achieved through:

Verif. Method	Verif. By	Plan	Notes/Comments
I	ENG	Review the design to verify the bogie and bogie sleeve designs facilitate monitoring of canister exterior temperatures during glass pour.	Document in an evaluation/assessment.
D	SU/ COM	Demonstrate the ability to monitor canister exterior temperatures during the glass pour.	

3.6.2 Nuclear Safety, ALARA, Environmental and Other Regulatory Requirements

None

3.6.3 System Interface Requirements

None

3.6.4 Other Technical, Specialty, Operations and Maintenance Requirements

None

3.7 Grapple Requirements

Reference 24590-HLW-3ZD-HRH-00001, HLW Canister Receipt Handling (HRH) System Design Description, for general canister grapple design requirements. Requirements specific to the HPH design are included in this section.

3.7.1 Mission and Functional / Performance Requirements (incl. states/modes)

None

3.7.2 Nuclear Safety, ALARA, Environmental and Other Regulatory Requirements

None

3.7.3 System Interface Requirements

3.7.3.1 Grapple and Crane Interface

Requirement: The canister grapple lifting bails shall be compatible with the lifting hooks on the canister handling cave cranes. (A.1, A.2, A.3, A.7, A.8, A.11, A.13, A.22, A.23, E.1, E.2, E.3, E.6)

Basis Discussion: The grapple lifting bails interface with the canister handling cave crane hooks.

Verification: Verification is expected to be achieved through:

Verif. Method	Verif. By	Plan	Notes/Comments
I	ENG	Inspect design to verify the canister grapple lifting bails are compatible with the canister handling cave crane hooks.	
D	SU/COM	Demonstrate compatibility between the canister grapple lifting bails and the canister storage cave crane hooks.	

3.7.4 Other Technical, Specialty, Operations and Maintenance Requirements

3.7.4.1 Disengage Grapple

Requirement: The HPH design shall include the capability to manually disengage the grapple from a canister using an in-cave MSM. Adequate operator viewing capability and a canister support/storage point shall be provided within the working range of the MSM [Section 14.12, ORD, ROIN: 8-4336]. (L.1)

Basis Discussion: In the event that the grapple does not disengage from the canister, an in-cave MSM can be used to disengage the grapple from the canister. Viewing capability and a canister support point must be available within reach of the MSM.

[ALARA]

Verification: Verification is expected to be achieved through:

Verif. Method	Verif. By	Plan	Notes/Comments
I	ENG	Review of the HPH design to verify capability to use MSM to manually disengage the grapple from the canister.	
D	SU/ COM	Demonstrate the HPH systems capability to use a MSM to manually disengage the grapple from the canister.	

3.8 Posting Port and Glovebox Requirements

3.8.1 Mission and Functional / Performance Requirements

3.8.1.1 Glovebox Pressure

Requirement: The glovebox (in conjunction with normal operation of the facility ventilation systems) shall be capable of maintaining a negative pressure relative to its room location. [Section 14.15, ORD, ROIN: 40-9971, ROIN: 40-9977][Section 4.2-1, SRD, ROIN: 1-38663][Section 5.1.2, BOD, ROIN: 1-40438].

Basis Discussion: Air is drawn through the glovebox and into the canister handling cave, by the facility ventilation system. The glovebox must regulate this air flow to maintain a negative pressure in the glovebox relative to the room in which it resides, including while the glovebox airlock and posting port doors are open in any of the configurations allowed by the local control station and interlocks. [ALARA]

Verification: Verification is expected to be achieved through:

Verif. Method	Verif. By	Plan	Notes/Comments
I	ENG	Review the design for an ability to maintain a negative internal pressure, relative to the surrounding room, through regulation of ventilation air flowing through the glovebox and into the cell or cave.	Document in an evaluation/assessment.
T	SU/ COM	Verify that, in conjunction with normal operation of the facility ventilation systems, the glovebox can maintain a negative pressure relative to the room it resides in.	

3.8.1.2 Glovebox Construction

Requirement: There shall be no sharp edges within the HPH glovebox. [Section 14.15, ORD, ROIN: 40-9968]

Basis discussion: Removing sharp edges inside the glovebox reduces the chances of ripping a glove. [ALARA]

Verification: Verification is expected to be achieved through:

Verif. Method	Verif. By	Plan	Notes/Comments
I	ENG	Review the design of the glovebox to verify that the glovebox interior does not contain any sharp edges.	Document in an evaluation/assessment.

3.8.1.3 Posting Port

Requirement: The posting port shall be designed to allow for the transfer of small items and material between the accessible manned areas and the canister handling cave. [Section 12.6.2.1, ORD, ROIN: 8-10065] (A.2, A.17.1, B.1, B.3)

Basis Discussion: Posting ports allow the transfer of materials (e.g. welding torch blocks, weld electrodes, canister lids) between manned accessible operating areas and high-dose, high-contamination areas. The posting ports consist of a transport tray, in-cave and out-cave shield doors, interlocks, and a glovebox. [ALARA]

Verification: Verification is expected to be achieved through:

Verif. Method	Verif. By	Plan	Notes/Comments
I	ENG/ OPS	Review the design and location of the posting port to confirm that it is located such that it can be used to transport small items from a manned area to the canister handling cave area.	Document in an evaluation/assessment

3.8.1.4 Measuring Contamination Levels

Requirement: The HPH glovebox shall provide the capability to import and use portable instruments or probes within the glovebox, including those used to measure the contamination levels of components that have been brought into the glovebox. [Sections 6.13.1.4, 6.17, WTP HLW Canister Processing Activities, ROIN: 40-23687, ROIN: 45-9284] (A.17.1)

Basis Discussion: Preliminary or go/no-go contamination measurements may be taken inside the glovebox using small portable instruments.

[ALARA]

Verification: Verification is expected to be achieved through:

Verif. Method	Verif. By	Plan	Notes/Comments
I	ENG/ OPS	Review the design to verify the capability to import and use portable instruments within the glovebox.	
D	SU/ COM	Demonstrate the ability to import and use portable instruments within the glovebox including the ability to measure contamination levels of components.	

3.8.2 Nuclear Safety, ALARA, Environmental and Other Regulatory Requirements

None

3.8.3 System interface Requirements

3.8.3.1 Glovebox Power Supply

Requirement: [HOLD] Posting Port Safety instrumentation shall utilize a separate power supple from Non-Safety instrumentation. [Section 9.5.4, 9.10, BOD, ROIN: 8-11599, ROIN: 1-41025]

Basis Discussion: This requirement is on "HOLD" due to differences in functional classifications between the PDSA (SS) and the SDS (Non-Safety) [24590-WTP-ATS-MGT-15-0298]

Verification: Verification is expected to be achieved through:

Verif. Method	Verif. By	Plan	Notes/Comments
I	ENG	Review the design to verify posting port Safety and Non-Safety instruments connect to separate power supplies.	Documented in an evaluation/assessment

3.8.4 Other Technical, Specialty, Operations and Maintenance Requirements

3.8.4.1 Glovebox Piping

Requirement: The glovebox design shall not use braided metal hosing, glass, or plastic, and shall minimize the volume of active pipe work inside the glovebox. [Section 11.7.4, BOD, ROIN: 2-43142][Section 14.15, ORD, ROIN: 40-9969, ROIN: 40-9973, ROIN: 40-9976]

Basis Discussion: Suitable justification shall be provided prior to the use of any braided metal hosing, glass, or plastic within the glovebox.

Verification: Verification is expected to be achieved through:

Verif. Method	Verif. By	Plan	Notes/Comments
I	ENG	Review the design to confirm that braided metal hosing, glass, or plastic have not been specified in the glovebox design	Document in an evaluation/assessment

3.8.4.2 Glovebox Fire Protection

Requirement: [HOLD] The HPH glovebox shall be provided with ember screens and an automatic sprinkler system in the posting port and the glovebox. [Section 4.1.10, PFHA, ROIN: 40-28632]

Basis Discussion: The gloveboxes are designed in accordance with DOE-STD-1066-97, Section 15, and National Fire Protection Association (NFPA) 801, as tailored in Appendix C of the SRD, which require the gloveboxes to have automatic sprinklers and the means for draining. This requirement is on "HOLD" due to a discrepancy between the preliminary fire hazards analysis for the HLW (PFHA-HLW) and the design; the PFHA HLW indicates that automatic sprinkler protection is provided in the posting port and the glovebox, whereas current design only provides automatic sprinkler protection in the glovebox. The PFHA is a unique requirement document that is developed based on the design. Therefore, this requirement is on "HOLD" until 24590-WTP-PIER-MGT-14-1322 is resolved to determine if the PFHA requires revision to remove mention of the sprinkler system in the posting port. [24590-WTP-ATS-MGT-15-0171]

Verification: Verification is expected to be achieved through:

Verif. Method	Verif. By	Plan	Notes/Comments
I	ENG	Review of design to verify provision of ember screens and automatic sprinkler system in the HPH glovebox.	Document in an evaluation/assessment

3.8.4.3 Glovebox Maintainable Items

Requirement: All of the gloveboxes maintainable items shall be accessible. [Section 14.15, ORD, ROIN: 40-9966]

Basis Discussion: All maintainable items on the glovebox are accessible. This includes items inside of the glovebox.

Verification: Verification is expected to be achieved through:

Verif. Method	Verif. By	Plan	Notes/Comments
I	ENG	Review the glovebox design to verify access to all maintainable items.	

3.8.4.4 Glovebox Labeling

Requirement: All valves and instruments within the glovebox shall be labeled to be readable from outside the glovebox. [Section 14.15, ORD, ROIN: 40-9976]

Basis Discussion: None.

Verification: Verification is expected to be achieved through:

Verif. Method	Verif. By	Plan	Notes/Comments
I	CON	Inspect the glovebox valves and instruments for labeling readable from outside the glovebox.	

3.8.4.5 Operator Design

Requirement: The HPH glovebox shall be designed and positioned for typical operator size and strength. [Section 14.15, ORD, ROIN: 40-9967].

Basis Discussion: The glovebox is designed and positioned such that a typical operator can perform the required operations and reach all required equipment inside the glovebox. Design in accordance with human factors provisions of AGS-G001, Guideline for Gloveboxes, meets the requirement to design for a "typical" operator.

Verification: Verification is expected to be achieved through:

Verif. Method	Verif. By	Plan	Notes/Comments
I	ENG	Inspect the design to verify glove ports allow an operator of typical size and strength to perform all required operations within the limited space of the glovebox.	

3.9 Weld Station

3.9.1 Mission and Functional / Performance Requirements (incl. states/modes)

The following process activities take place in the Canister Pour Handling System weld station.

- Transfer filled canister to weld station (WAI designation addressed in 25490-HLW-WSF-ENG-07-003).
- Visual inspection of the canister headspace prior to fitting canister primary lid (WAI designation addressed in 24590-HLW-WSF-ENG-07-002).
- Glass removal from the external surface of the canister (WAI designation addressed in 24590-HLW-WSF-ENG-07-002)

- Place canister lid (primary or secondary) on the canister flange.
- Welding primary lid and/or secondary lid if required onto the canister.
- Confirmation of weld quality.
- Rework of the weld area for installation of a secondary canister lid.

3.9.1.1 Canister Welding Strategy

Requirement: The HPH design shall be capable of welding a primary, and if necessary a secondary lid, on the HLW canister in accordance with the ASME B&PVC - Section IX, Welding and Brazing. [Section 4.2, IHLW Waste Form Compliance Plan, ROIN: 40-20779] [WAI Items and Activities, ROIN: 45-1713] [WAI Screening Form, WTP HLW Canister Lid Welding, ROIN: 40-23639, ROIN: 45-12545, ROIN: 45-12575, ROIN: 45-23651] [Section 14.12, ORD, ROIN: 1-40077] [C.7(d)(2)(iv), DOE-BNI Contract, ROIN: 1-25981]. (A.16, A.17, A.18, A.20)

Basis Discussion: Use of a welded closure eliminates the need for a tamper-indicating device. The closure welding process will be qualified such that a final leak test is not required on production canisters. The final canister closure will consist of welding a primary closure lid in place using a remotely operated automatic GTAW process. The canister will be designed such that, if the primary lid cannot be welded to an acceptable quality, a secondary lid can be welded in place over the primary lid to meet the final closure leak-tightness requirements. The secondary lid will be welded using the welding process specified for the primary lid.

Verification: Verification is expected to be achieved through:

Verif. Method	Verif. By	Plan	Notes/Comments
T	SU/ COM	Demonstrate in advance the final closure welding process on full-scale canisters. The canisters will be helium-leak tested to ensure leak-tightness to less than 1 × 10-4 atm-cc/sec helium	
I	ENG	Visual inspection of the closure welds will be performed by a qualified weld inspector.	
D	SU/ COM	Demonstrate remote welding of the primary and secondary canister lids using the GTAW process.	

3.9.1.2 Primary Lid Magazine

Requirement: The primary lid magazines (24590-HLW-HC-HPH-LID-00004 and 00006) shall provide the capability to store primary lids in-cave. (B.2)

Basis Discussion: None.

Verification: Verification is expected to be achieved through:

Verif. Method	Verif. By	Plan	Notes/Comments
I	ENG	Review the design for the capability to store primary lids in-cave.	

3.9.1.3 Glass Removal Tools

Requirement: Glass removal tool HPH-TOOL-00005 and canister flange cleaning tool HPH-TOOL-00003 shall provide the capability to remove exterior glass deposits from the product canister. The tools shall be designed in a way that will not damage the canister beyond minor surface scratching during the glass removal process. [Section 4.3 (3.7), IHLW Waste Form Compliance Plan, ROIN: 40-20805]ROIN: 40-23499, ROIN: 40-23500, ROIN: 40-23613, ROIN: 40-23615, ROIN: 45-9275, ROIN: 45-9276] [WAI Items and Activities, ROIN: 45-1790, ROIN: 45-1792] [Section 14.12, ORD, ROIN: 1-40077]. (A.8, A.9, E.4, E.5)

Basis Discussion: Visible waste glass is removed from the canister exterior before shipment.

Verification: Verification is expected to be achieved through:

Verif. Method	Verif. By	Plan	Notes/Comments
I	ENG	Review the design to verify the capability to remove exterior glass deposits from the product canister.	Glass removal from the external surface of the canister is a WAI activity.
D	SU/ COM	Demonstrate capability to removes glass deposits from the external surface and flange area of the canister without causing damage beyond minor scratching of the surface.	This demonstration is WAI.

3.9.1.4 Canister Rework

3.9.1.4.1 Canister Rework

Requirement: The flange conditioning tool shall be capable of performing the following rework activities on filled HLW canisters:

- Remove primary lid welds ranging from localized weld defects to complete removal of a primary lid weld
- Prepare the canister flange for fitting and welding of a secondary lid
- Remove secondary lid welds ranging from localized weld defects to complete removal of a secondary lid weld

[Section 6.1.3.4, WAI Screening Form, WTP HLW Canister Lid Welding, ROIN: 45-11814, ROIN: 45-12542, ROIN: 45-12576, ROIN: 45-12577, ROIN: 45-12578, ROIN: 45-12611] [Appendix A (line 80), WAI Items and Activities, ROIN: 45-1717] [Section 14.12, ORD, ROIN: 1-40077]. (A.15, A.19, A.20)

Basis Discussion: The flange conditioning tool (24590-HLW-FH-HPH-TOOL-00007) is a milling machine used to rework canister flanges to facilitate installation of a new primary or secondary lid.

Verification: Verification is expected to be achieved through:

Verif. Method	Verif. By	Plan	Notes/Comments
I	ENG	Review the design to verify the flange conditioning tool is capable of removing primary lid welds, preparing a canister for a secondary lid, and removing secondary lid welds.	
D	SU/ COM	Demonstrate the flange conditioning tool is capable of removing primary lid welds, preparing a canister for a secondary lid, and removing secondary lid welds.	This demonstration is WAI.

3.9.1.4.2 Dry Cutting and Chip Collection

Requirement: The flange conditioning tool shall perform canister rework without the use of cutting fluids, and shall provide a means of vacuum-collecting the resultant shavings.

[Section 6.1.3.4, WAI Screening Form, WTP HLW Canister Lid Welding, ROIN: 45-11814, ROIN: 45-12542, ROIN: 45-12576, ROIN: 45-12577, ROIN: 45-12578, ROIN: 45-12611] [WAI Items and Activities, ROIN: 45-1717] [Section 14.12, ORD, ROIN: 1-40077]. (A.19, A.20)

Basis Discussion: Dry machining and vacuum-collection of chips prevents the introduction of foreign materials into the filled canister. Vacuum collection may be achieved by interfacing with the weld station vacuum unit.

Verification: Verification is expected to be achieved through:

Verif. Method	Verif. By	Plan	Notes/Comments
I	ENG	Review the design to verify the flange conditioning tool is capable of performing canister rework without the use of cutting fluids, and provides a means of collecting shavings.	
D	SU/ COM	Demonstrate the flange conditioning tool is capable of performing canister rework without the use of cutting fluids, and provides a means of collecting shavings.	This demonstration is WAI.

3.9.1.4.3 Chamfered Edges

Requirement: The canister weld station shall include passive fixed guides to facilitate loading canisters. Edges on surfaces that contact the canister shall have a minimum 1/32 in. radius or chamfer [Key Attributes for Design Table, WAI Qualification Plan for Canister Weld Station, ROIN 45-37343] [Appendix A (line 203), WAI Items and Activities, ROIN: 45-1838].

Basis Discussion: Chamfered edges prevent damaging the canister beyond minor surface scratches.

Verification: Verification is expected to be achieved through:

Verif. Method	Verif. By	Plan	Notes/Comments
I	ENG	Review the design to verify edges of the flange conditioning tool that come in contact with the canister have a minimum of 1/32 in. radius or chamfer.	

3.9.1.4.4 Surface Finish

Requirement: Surfaces of the canister weld station that contact the canister shall have a surface finish of 63 μin. or better [Key Attributes for Design Table, WAI Qualification Plan for Canister Weld Station, ROIN 45-37342] [Section 6.1.3.2, WTP HLW Canister Lid Welding, ROIN: 45-12563, ROIN: 45-12564] [Appendix A (line 203), WAI Items and Activities, ROIN: 45-1838].

Basis Discussion: Smooth contact surfaces prevent damaging the canister beyond minor surface scratches.

Verification: Verification is expected to be achieved through:

Verif. Method	Verif. By	Plan	Notes/Comments
I	ENG	Review the design to surfaces of the flange conditioning tool that contact the canister have a surface finish of 63 µin. or better.	Ref. WAI Qualification Plan for the Canister Weld Station

3.9.1.5 Glass Fill Height Measurement Equipment

Requirement: The system shall provide the capability to measure the glass fill height of an IHLW canister. [Section 6.5, 6.17, WTP HLW Canister Processing Activities, ROIN: 40-23619, ROIN: 40-23521, ROIN: 43-1716, ROIN: 45-9302, ROIN: 45-9296] [WAI Items and Activities, ROIN: 45-1783]. (A.12)

Basis Discussion: The glass fill height measured using a glass level indicator, non WAI, (24590-HLW-MH-HPH-MHAN-00022 and 00037) that shall measure from the top of the canister to the glass surface. The minimum fill height to be 87% of the volume of the canister. The average fill height is to be 95% of the volume of the canister.

Verification: Verification is expected to be achieved through:

Verif. Method	Verif. By	Plan	Notes/Comments
I	ENG	Review design for the capability to measure glass fill height.	
D	SU/ COM	Demonstrate the capability to measure the glass fill height on full-scale nonradioactive canisters using both the mechanical glass level indicator and the indexed glass shard sampling wand,	Glass fill height measurement post-fill at the weld station is a WAI activity.

3.9.1.6 Canister Temperature Measurement Equipment

Requirement: The system shall provide the capability to measure the canister flange temperature [Section 14.12, ORD, ROIN: 8-4335]. (A.10, A.21)

Basis Discussion: Canister flange temperature must be below 350°F prior to lid welding, and below 212°F prior to transfer to the HDH canister rinse bogie.

Verification: Verification is expected to be achieved through:

Verif. Method	Verif. By	Plan	Notes/Comments
I	ENG	Review design for the capability to measure canister flange temperature.	

3.9.1.7 Modular Welder Components

Requirement: The HPH welder shall include modular, separable components for ease of maintenance/replacement. (M.1.3)

Basis Discussion: Separable components will incorporate lifting bails for removal by process cranes for maintenance/replacement. [ALARA]

Verification: Verification is expected to be achieved through:

Verif. Method	Verif. By	Plan	Notes/Comments
I	ENG	Review equipment design to verify the use of modular components.	Document in an evaluation/assessment. Plant Engineering to participate in or review the evaluation/assessment.

3.9.1.8 Air Cooled Torch

Requirement: The canister lid welder torch shall be air cooled. [Key Attributes for Design Table, WAI Qualification Plan for Canister Lid Welder, ROIN: 45-37344]

Basis Discussion: Air cooling eliminates the potential to introduce liquids into the filled canister.

Verification: Verification is expected to be achieved through:

Verif. Method	Verif. By	Plan	Notes/Comments
I	ENG	Review the canister lid welder design to verify the torch is air cooled.	Ref. WAI Qualification Plan for the Canister Lid Welder

3.9.1.9 Tungsten Electrode

Requirement: The canister lid welder electrodes shall be made of tungsten. [Key Attributes for Design Table, WAI Qualification Plan for Canister Lid Welder, ROIN: 45-37346]

Basis Discussion: Tungsten electrodes prevent weld contamination.

Verification: Verification is expected to be achieved through:

Verif. Method	Verif. By	Plan	Notes/Comments
I	ENG	Review the canister lid welder design to verify the electrodes are made of tungsten.	Ref. WAI Qualification Plan for the Canister Lid Welder

3.9.1.10 Shield Gas Composition

Requirement: The system shall be capable of providing shield gas, composed of 75% Helium/ 25% Argon, at the necessary flow rate, to each weld station. [Key Attributes for Design Table, WAI Qualification Plan for Canister Lid Welder, ROIN: 45-37347]

Basis Discussion: The 75% Helium / 25% Argon shield gas composition does not adversely affect weld quality. Qualified canister weld procedures determine shield gas flow rate.

Verification: Verification is expected to be achieved through:

Verif. Method	Verif. By	Plan	Notes/Comments
I	ENG	Review the design to verify the ability to supply 75% Helium/ 25% Argon shield gas to each weld station.	Ref. WAI Qualification Plan for the Canister Lid Welder

3.9.1.11 Lid Welder Monitoring and Calibration (WAI activities)

Requirement: The system shall provide the ability to perform the following activities at each weld station. [Appendix A (line 80), WAI Items and Activities, ROIN: 45-1717][Section 6.1.1, WAI Screening Form, WTP HLW Canister Lid Welding, ROIN: 45-37345] [Section 4.3 (2.2) IHLW Waste Form Compliance Plan, ROIN: 2-20354]

- Monitor, record, display, and transmit to the PCJ, critical weld process parameters that support weld verification
- Calibrate welder components that measure critical weld parameters (current, voltage, shield gas flow)
- Adjust and verify parameters that affect weld quality but are not suitable for calibration (Rotation accuracy, rotation speed, rotation dwell, wire feed accuracy, wire feed speed, power supply timing)
- Replace the welder electrode

Basis Discussion: These activities are waste acceptance impacting (WAI).

Verification: Verification is expected to be achieved through:

Verif. Method	Verif. By	Plan	Notes/Comments
I	ENG	Review the design to verify the capability to perform the listed WAI activities at each weld station.	
D	SU/COM	Demonstrate the capability to perform the listed WAI activities at each weld station.	This demonstration is WAI.

3.9.1.12 Chamfered Edges

Requirement: Edges of the canister lid welders that contact the canister shall have a minimum 1/32 in. radius or chamfer. [Key Attributes for Design Table, WAI Qualification Plan for Canister Lid Welder, ROIN: 45-1838]

Basis Discussion: Chamfered edges prevent damaging the canister beyond minor surface scratches. The electrode is exempted from this requirement.

Verification: Verification is expected to be achieved through:

Verif. Method	Verif. By	Plan	Notes/Comments
I	ENG	Review the canister lid welder design to verify edges that contact the canister have a minimum 1/32 in. radius or chamfer.	Ref. WAI Qualification Plan for the Canister Lid Welder

3.9.1.13 Surface Finish

Requirement: Surfaces of the canister lid welders that contact the canister shall have a surface finish of 63 µin. or better. [Key Attributes for Design Table, WAI Qualification Plan for Canister Lid Welder, ROIN: 45-37342]

Basis Discussion: Smooth contact surfaces prevent damaging the canister beyond minor surface scratches. The electrode is exempted from this requirement.

Verification: Verification is expected to be achieved through:

Verif. Method	Verif. By	Plan	Notes/Comments
I	ENG	Review the canister lid welder design to verify surfaces that contact the canister have a surface finish of 63 µin. or better.	Ref. WAI Qualification Plan for the Canister Lid Welder

3.9.2 Nuclear Safety, ALARA, Environmental, and Other Regulatory Requirements

None

3.9.3 System Interface Requirements

None

3.9.4 Other Technical, Specialty, Operations and Maintenance Requirements

3.9.4.1 Glass Sample

Requirement: The design shall provide the capability to remotely obtain a glass sample from a filled IHLW canisters, transfer the sample to a sample vial, and transfer the sample vial to a shielded cask positioned in the canister handling cave crane decontamination area. [Section C.7(a)(10), DOE-BNI Contract, ROIN: 1-25940] (C.1, C.2, C.3)

Basis Discussion: None

[ALARA]

Verification: Verification is expected to be achieved through:

Verif. Method	Verif. By	Plan	Notes/Comments
I	ENG	Inspect design to verify the capability to obtain an IHLW glass sample, transfer the sample to a vial, and transfer the vial to a shielded cask	
D	SU/ COM	Demonstrate the ability to retrieve a glass sample	This demonstration is WAI.

3.9.4.2 Weld Station Remote Viewing

Requirement: System HPH shall provide remote viewing capabilities to facilitate performing the following activities and inspections at each weld station [Appendix A (line 80, 89, 156), WAI Items and Activities, ROIN: 45-1717, ROIN: 45-1726, ROIN: 45-1792]. [Section 4.3 (2.2), (3.4), (3.7) IHLW Waste Form Compliance Plan, ROIN: 40-23089, ROIN: 2-20341, RON: 2-20353, 40-9963] [Section 1.1.2.4, 5.2.1, WTP HLW Canister Processing Activities, ROIN: 43-1706, ROIN: 45-9193] [Section 3, 6.1.2, 6.1.3.2 HLW Canister Lid Welding, ROIN: 43-1721, ROIN: 45-12559].

- Visually inspect canister exterior surfaces, including the flange area, for glass deposits (A.8), and facilitate remote removal of deposits using remotely-operated in-cave tools, as necessary. (A.9).
- Visually inspect the head space of filled canisters to verify no foreign liquids or materials are present (A.14)
- Visually inspect torch positioning, with the welder positioned on the canister, prior to welding (A.17)
- Visually inspect weld quality on installed primary and secondary lids (A.18)
- Visually inspect reworked canister flanges to verify the canister is ready to accept a primary or secondary lid (A.19, A.20)
- Read canister weld bead identification numbers [Appendix A, line 89, WAI Items and Activities)

Basis Discussion: These activities and inspections are waste acceptance impacting (WAI).

Verification: Verification is expected to be achieved through:

Verif. Method	Verif. By	Plan	Notes/Comments
I	ENG	Review the design to verify the capability to perform WAI visual inspections at each weld station.	Recommend using a software program such as "IGrip" (or similar).
D	SU/COM	Demonstrate the capability to perform WAI visual inspections at each weld station.	This demonstration is WAI.

3.10 Master Slave Manipulators

3.10.1 Mission and Functional / Performance Requirements

3.10.1.1 Master Slave Manipulators (MSMs)

Requirement: The systems shall incorporate MSMs designed and located to perform the following remote handling and in-cave maintenance operations. MSM quantity and positions shall be sufficient to provide the required remote handling functionality [Section 11.4.1, BOD, ROIN: 1-41155] [Section 11.4.5, BOD, ROIN: 8-6553, ROIN: 8-6557] [Section 9.2, ORD, ROIN: 8-9095CD]

- Operate vacuum system, including vacuum drum change-out [3.4.1.6, 3.4.4.1]
- Lid and unlid solid waste basket [3.4.1.6]
- Perform override to release the grapple from a canister should the sequencing mechanism fail to retract the jaws.
- Support welding operations (weld machine positioning) [3.4.1.3, 3.4.4.1]
- Weld station remote repair, torch body replacement, and wire feeder installation/removal.
- Handle pneumatic needle descaler and rotary wire brush [3.9.1.3]
- Handle the glass level detector [3.4.1.3]
- Manipulate glass shard sampling equipment (including vacuum tool, sample vials, sample tray, sample vial transfer sleeve lid) [3.4.1.3]
- Placement of primary and secondary lid using lid lifter
- Weld Station Lid Weight [3.4.4.1]
- Install/remove camera from camera bracket assembly [3.9.1.1]
- Perform bogie decontamination [3.4.4.2]
- Support import/export of items thru the posting port [3.8.1.3]
- Manipulate the waste basket lifting bail in pour tunnel for export of solid waste to system HSH [3.4.1.6]
- Connect and disconnect all flange conditioning tool electrical and service connections

Basis Discussion: Supports remote maintenance, operations, and disposal of solid secondary waste. In-cave maintenance is accomplished with through-wall manipulators. MSMs provide remote manipulation of tools and equipment at cave face shield window stations. [ALARA]

Verification: Verification is expected to be achieved through:

Verif. Method	Verif. By	Plan	Notes/Comments
I	ENG	Review the design to verify that the activities noted in the requirement can be performed by the MSMs.	
D	SU/ COM	Demonstrate that the manipulators can perform the activities noted in the requirement in accordance with 24590-WTP-PL-RACT-RT-0001, *WTP Remotability Verification Plan*.	

3.10.2 Nuclear Safety, ALARA, Environmental and Other Regulatory Requirements

None

3.10.3 System Interface Requirements

None

3.10.4 Other Technical, Specialty, Operations and Maintenance Requirements

3.10.4.1 Master Slave Manipulator Recovery

Requirement: The HPH MSM master arms and through wall assemblies shall be designed for removal from the cave wall to a removal cart or monorail in the operating gallery. [Section 9.2, ORD, ROIN: 8-9095A] [Section 9.2, ORD, ROIN: 8-9095B]

Basis Discussion: The out-cave and through wall portions of the MSM are removed onto a specialized cart or monorail located in the operating gallery. The slave arm is transferred to the CMA using the storage cave crane; reference requirement 3.4.4.1.

Verification: Verification is expected to be achieved through the following:

Verif. Method	Verif. By	Plan	Notes/Comments
I	ENG	Review design to verify the capability to remove the out-cave and through wall portions of the MSM on a cart or monorail in the operating gallery.	
D	SU/COM	Demonstrate the removal of the master arm and through wall portions of the MSM.	

3.11 Shield Hatches and Shield Doors

3.11.1 Mission and Functional / Performance Requirements (incl. states/modes)

3.11.1.1 Engineered Air Gap

Requirement: Shield doors HPH-DOOR-00001, -00002, -00003, -00004, -00005, -00008 and hatches HPH-HTCH-00001, -00002 shall provide an engineered air gap which, in conjunction with the facility ventilation system, maintains an air cascade with a minimum perimeter air flow velocity of 200 feet per minute. [Section 7.1, ORD, ROIN: 8-489][Sections 5.1.2, 11.8.3.1, 12.3.2, BOD, ROIN: 1-40438, ROIN: 1-40441, ROIN: 2-43160, ROIN: 8-15078][Section 4.4.1, 4.4.1.1, 4.4.1.4, PDSA – HLW Facility, ROIN: 2-46201, ROIN: 1-21615A, ROIN: 1-21619][Safety Criterion 4.2-1, SRD, ROIN: 1-38663]

Basis Discussion: An engineered air gap help to control the spread of contamination and to maintain the cascading air flow from areas of low contamination to areas of higher contamination. [ALARA]

Verification: Verification is expected to be achieved through:

Verif. Method	Verif. By	Plan	Notes/Comments
A	ENG	Perform analysis to verify that the minimum 200 feet/minute air flow velocity around door/hatch perimeters is met.	
I	SUP/ENG	Review the door/hatch design to verify conformance to engineered air gap requirements analysis.	May be documented in Factory Acceptance Test Report.

Verif. Method	Verif. By	Plan	Notes/Comments
I	CON	Inspect installation design to verify conformance to engineered air gap requirements	

3.11.1.2 Shielded Personnel Access Door (SPAD) Sealing

Requirement: **[HOLD]** The HPH SPADs shall fully seal against their mating surface to maintain the C5V boundary. [Sections 4.3.9.2, 5.6.12, PDSA – HLW Facility, ROIN: 40-11532, ROIN: 40-11533, ROIN: 40-11539C].

Basis Discussion: The SPADs maintain the C5V boundary by ensuring, when the doors are closed, they fully seal to restrict air from leaking out of the airlocks. The HPH SPADs are HDH-DOOR-00006, -00007, and -00009. This requirement is on "HOLD" due to discrepancies within the PDSA-HLW Facility. Condition report (CR) 24590-WTP-PIER-MGT-14-0914 documents the conflicting requirements for an engineered air-gap and a fully seated seal between mating surfaces for the shield doors.

[ALARA] [24590-WTP-ATS-MGT-15-0172]

Verification: Verification is expected to be achieved through:

Verif. Method	Verif. By	Plan	Notes/Comments
I	ENG	Review of SPAD design for fully sealing surfaces around the aperture perimeter.	
T	SU/COM	Test the SPAD installation for full sealing around the aperture perimeter.	

3.11.1.3 Replaceable Seals

Requirement: SPADs shall have replaceable seals. [Section 4.3.1.2, 4.3.9.3, PDSA – HLW Facility, ROIN: 1-21509, ROIN: 40-11535].

Basis Discussion: The SPADs maintain confinement of the C5V boundary by ensuring that, when the doors are closed, they seal to restrict air from leaking out of the airlocks. The seals on SPADs may wear out and will be replaceable. [ALARA]

Verification: Verification is expected to be achieved through:

Verif. Method	Verif. By	Plan	Notes/Comments
I	ENG	Review the design for incorporation of replaceable seals.	

3.11.1.4 Physical Locking Devices

Requirement: The SPADs and shield doors listed below shall include provisions for physical locks or electronic lock-out to be applied to electrical power sources, controls, or mechanical locking devices [Sections 4.4.22, PDSA – HLW Facility, ROIN: 2-41352, ROIN: 2-41353][Section 11.8.3.1, BOD, ROIN: 2-43161, ROIN: 2-43164].

- SPADs and shield doors: HPH-DOOR-00001, -00002, -00003, -00004, -00005, -00006, -00007, -00008, -00009

Basis Discussion: Locks provide a physical barrier to prevent unauthorized or inadvertent entry into areas of potential high radiation source. The lock can be applied to either an electrical and/or mechanical isolation point. Padlocks and hasps are inappropriate for equipment shield doors.

[ALARA]

Verification: Verification is expected to be achieved through:

Verif. Method	Verif. By	Plan	Notes/Comments
I	ENG	Review the design for incorporation of physical locking devices, power/control locks, or blocking devices.	Document review in an evaluation/assessment report. Plant Engineering to participate or review evaluation/assessment report.

3.11.1.5 Shielding

Requirement: The HPH shield doors and through-wall devices that fill or cover a penetration through a shield wall shall provide adequate radiation shielding (including guide systems or shield blocks) to reduce personnel exposure to levels acceptable within the Radiation Protection Program. [Sections 4.4.1, 4.4.1.2, 4.4.1.3, PDSA - HLW Facility, ROIN: 1-21614, ROIN: 1-21617A, ROIN: 14-5978][Section 11.8.3.1, BOD, ROIN: 2-43160]

- Doors: HPH-DOOR-00001, 00002, 00003, 00004, 00005, 00006, 00007, 00008, 00009
- Through-wall portion of MSMs: HPH-MANIP-00002, 00003, 00008, 00009, 00010, 00011, 00012, 00013, 00014, 00015
- Posting Port: HPH-TWDVC-00009
- Through Wall Devices: HPH-TWDVC-00003, 00004, 00006, 00014, 00015, 00016, 00017, 00018
- Through wall portion of Crane Cable Reels: HPH-RCVY-00007, 00008
- Through Wall Drives: HPH-DRIV-00003, 00004
- Plugs: HPH-PLUG-00004, 00005

Basis Discussion: None. [ALARA]

Verification: Verification is expected to be achieved through:

Verif. Method	Verif. By	Plan	Notes/Comments
I	ENG	Review design to verify shield doors, hatches, and through-wall devices conform with applicable shielding calculations and shine path analyses.	Document in an evaluation/assessment. Rad Engineering to participate in and/or review the evaluation/assessment

3.11.1.6 Withstand Impacts

Requirement: Equipment shield doors (HPH-DOOR-00001, 00002, 00003, 00004, 00005 and 00008) shall withstand impacts from loaded cranes or bogies without catastrophically failing or creating a direct shine path into a maintenance or decontamination area. [Sections 5.6.12, PDSA - HLW Facility, ROIN: 40-11539B].

Basis Discussion: The doors provide shielding for personnel working in the crane maintenance or decontamination areas. Should a door fail catastrophically, a radiological shine path may expose workers to high doses of radiation. The impact load case for bogie shield doors HPH-DOOR-00002 and 00003 can utilize an unloaded bogie because the aperture wall will prevent a loaded bogie from making contact with a door.

Verification: Verification is expected to be achieved through:

Verif. Method	Verif. By	Plan	Notes/Comments
A	ENG/SUP	Determine impact loads imposed on affected shield doors by loaded cranes or bogies.	
I	ENG	Review door design to verify affected doors are able to withstand crane or bogie impacts without catastrophic failure.	

3.11.1.7 Fire Barrier

Requirement: The following HPH equipment shall be designed to an equivalent rating with the fire rated barrier in which they are contained as required in the IBC 2000 and DOE-STD-1066-97. This includes the following HPH equipment: [Section 10.3.4.7, BOD, ROIN: 1-41107].

- HPH Doors: HPH-DOOR-00002, 00003, 00006, 00007, 00009
- HPH MSMs: HPH-MANIP-00002, 00003, 00008, 00009, 00010, 00011, 00012, 00013, 00014, 00015
- HPH Posting Port: HPH-TWDVC-00009
- HPH Through Wall Devices: HPH-TWDVC-00003, 00004, 00006, 00014, 00015, 00016, 00017, 00018
- HPH Crane Cable Reels: HPH-RCVY-00007, 00008
- HPH Through Wall Drives: HPH-DRIV-00003, 00004
- HPH Plugs: HPH-PLUG-00004, 00005
- Bridge Beams for Doors: HPH-DOOR-00001, 00002, 00003, 00008

Basis Discussion: Fire barrier drawings which include barriers related to HPH are the following:

- 24590-HLW-U1-60-00001, HLW Vitrification Building Fire Barrier Drawing Plan at El -21'-0"
- 24590-HLW-U1-60-00002, HLW Vitrification Building Fire Barrier Drawing Plan at El 0'-0"
- 24590-HLW-U1-60-00003, HLW Vitrification Building Fire Barrier Drawing Plan at El 14'-0"
- 24590-HLW-U1-60-00004, HLW Vitrification Building Fire Barrier Drawing Plan at El 37'-0"
- 24590-HLW-U1-60-00006, HLW Vitrification Building Fire Barrier Drawing Plan at El 72'-0"

Verification: Verification is expected to be achieved through:

Verif. Method	Verif. By	Plan	Notes/Comments
I	ENG	Verify all components that penetrate a fire barrier are tested to not less than the required fire resistance rating of the barrier based on the fire exposure and acceptance criteria specified in ASTM E 119. Use of alternative methods for determining fire resistance shall be approved by the building official.	Document in an evaluation/assessment. Assessment to be submitted to the building official for approval. Testing to ASTM E-119 is invoked by IBC 2000 and DOE-STD-1066-97

3.11.1.8 Hatch Liners

Requirement: The innermost portion of the HPH hatch liners shall be constructed of stainless steel, be free of burrs, fins, and other harmful surface conditions, and have sharp welds and corners ground smooth and blended into the base material. [Section 14.12, ORD, ROIN: 43-1599].

Basis Discussion: The HPH hatch liners will protect the hatch and protect canisters from damage. The innermost layer of the liner is the portion that may come in contact with the canister and will be constructed of stainless steel to prevent chlorides from being transferred to the canister.

Verification: Verification is expected to be achieved through:

Verif. Method	Verif. By	Plan	Notes/Comments
I	ENG	Review of hatch design to verify incorporation of stainless-steel liners.	
I	CON	Inspect the hatch liners for smoothly ground welds and removal of burrs, fins, and harmful surface finishes.	

3.11.2 Nuclear Safety, ALARA, Environmental and Other Regulatory Requirements

3.11.2.1 Drives for Hatches and Vertical Shield Doors

Requirement: Drives for hatches and for vertical shield doors shall be located outside of the canister handling cave and pour tunnels. [Sections 11.4.1, 11.8.3.1, BOD, ROIN: 2-43161, ROIN: 2-43165, ROIN: 1-41149].

Basis Discussion: Drives and closure mechanisms are located in the through wall portion of the posting port. [ALARA].

Verification: Verification is expected to be achieved through:

Verif. Method	Verif. By	Plan	Notes/Comments
I	ENG	Review the design for hatch and vertical shield door drives located outside of the canister handling cave and pour tunnels.	

3.11.3 System Interface Requirements

None.

3.11.4 Other Technical, Specialty, Operations and Maintenance Requirements

3.11.4.1 Mounting

Requirement: The structural mounting components of the HPH shield doors, SPADs, and pour tunnel hatches, shall be designed in accordance with DOE-STD-1020-94, ANSI/AISC N690, and AISC M016, as applicable. [Safety Criterion 4.1-3, SRD, ROIN: 1-38653]

Basis Discussion: Typically, ANSI/AISC N690 is applied to SC-I and SC-II SSCs and AISC M016 is applied to SC-III and SC-IV SSCs. DOE-STD-1020-94 is generally applicable to these SSCs. The ability of the rack to maintain canister configuration is addressed within structural/seismic design.

Verification: Verification is expected to be achieved through:

Verif. Method	Verif. By	Plan	Notes/Comments
I	ENG	Review of design to verify structural analysis conforms with DOE-STD-1020-94, ANSI/AISC N690, and AISC M016, as applicable, and that the design conforms with the analysis.	

3.11.4.2 Shield Door Recovery

Requirement: Shield doors HPH-DOOR-00001, 00002, 00003, 00004, 00005 and 00008 shall be capable of being remotely recovered (pulled/lowered into the close position without manned entry into the decontamination area or maintenance area) using the remote recovery system. [Section 11.8.3.1, BOD, ROIN: 2-43162] (N.1.8) [Section 9.1, ORD, ROIN: 8-11750].

Basis Discussion: Door features facilitate connecting door recovery units to the door panel and permitting the recovery unit to move the door. After door closure, failed door components become man-accessible for repair. [ALARA]

Verification: Verification is expected to be achieved through:

Verif. Method	Verif. By	Plan	Notes/Comments
I	ENG	Inspect the shield door design to verify the ability to be remotely recovered via the door remote recovery system.	
D	SU/ COM	Demonstrate remotability in accordance with 24590-WTP-PL-RACT-RT-0001, WTP Remotability Verification Plan.	

3.11.4.3 Ease of Decontamination

Requirement: Shield doors shall be designed for ease of decontamination. [Section 7.1, ORD, ROIN: 8-488].

Basis Discussion: Door decontamination will be performed using the same methods/agents used on the surrounding room.

[ALARA]

Verification: Verification is expected to be achieved through:

Verif. Method	Verif. By	Plan	Notes/Comments
I	ENG	Review shield door design to verify materials or coatings applied to shield door panels support ease of decontamination.	Document in an assessment or ALARA design review. Rad Engineering to participate.

3.12 Monitoring & Controls Requirements

3.12.1 Mission and Functional / Performance Requirements (incl. states/modes)

3.12.1.1 Mechanical Handling Monitoring and Control

Requirement: The following HPH mechanical handling equipment shall be controlled and monitored through the MHJ: [Section 9.6.2, BOD, ROIN: 1-41007] (H.1, H.1.1, H.1.4)

- Shield doors (HPH-DOOR-00001, -00002, 00003, -00004, -00005, -00008)
- Hatches (HPH-HTCH-00001, -00002)
- Cranes and associated hoists (HPH-CRN-00001, -00002)
- Crane cable reels (HPH-RCVY-00007, -00009)
- Bogies (HPH-TRLY-00001, -00004, -00010, -00011)
- Bogie Locking Bolts (HPH-TWDVC-00003, -00004, -00005, -00006)
- Non-Safety interlock final control elements and sensors

Basis Discussion: The listed equipment is located in areas that are not accessible or not normally accessible to personnel and operated through the MHJ. The MHJ interfaces for control of equipment exist in control rooms, at a cave face, or in an accessible area near inaccessible equipment. The MHJ provides the following functions:

- Sequence control of discrete mechanical handling equipment
- Device interlocks (when not completely self-contained within packaged equipment)
- Control of process functions integral to the MHJ
- Control of package – supplied equipment

Verification: Verification is expected to be achieved through:

Verif. Method	Verif. By	Plan	Notes/Comments
I	ENG	Review the design to verify the listed HPH equipment/components above can be remotely monitored and controlled by the MHJ.	Document in an evaluation/assessment.

3.12.2 Nuclear Safety, ALARA, Environmental and Other Regulatory Requirements

3.12.2.1 Safety Interlocks

3.12.2.1.1 Canister Handling Cave Posting Port Interlocks

Requirement: [HOLD] The HPH posting port shall include interlocks to prevent the in-cave and out-cave doors from being open at the same time, and to prevent the out-cave door from opening when the gamma monitor indicates high radiation. [Section 7.3.4, BOD, ROIN: 1-40647][Sections 4.4.22.2, 4.4.22.3, PDSA - HLW Facility, ROIN: 45-32017, ROIN: 45-32023, ROIN: 45-32024, ROIN: 45-32041, ROIN: 45-32042] (I.1.2, I.1.3, I.1.4)

Basis Discussion: The posting port shield doors will be interlocked to ensure only one is open at a time and to prevent opening when a high radiation source is present to protect workers. The set point for the high radiation level interlock is to be determined by Radiation Engineering. This requirement is on "HOLD" due to differences in functional classification between the PDSA (SS) and the SDS (Non-Safety).

[24590-WTP-ATS-MGT-15-0173]

[ALARA]

Verification: Verification is expected to be achieved through:

Verif. Method	Verif. By	Plan	Notes/Comments
I	ENG	Review the design to verify incorporation of canister handling cave posting port interlocks.	Document in DVR
D	SU/ COM	Demonstrate the operability of the canister handling cave posting port interlocks.	

3.12.2.1.2 Bogie Interlocks for IHLW Canister Cooling

Requirement: [HOLD] Interlocks shall be provided to prevent loaded pour tunnel bogies (HPH-TRLY-00001, 00004, 00010, 00011) from traveling south to the pour tunnel hatches until the filled IHLW canister the bogie carries has cooled to a pre-determined temperature, or a pre-determined cooling period has been completed. [Section 4.4.15.2, PDSA - HLW Facility, ROIN: 45-31878] (I.1.1)

Basis Discussion: This Safety Significant interlock prevents the transfer of a poured canister between the pour tunnels and the canister handling cave until the canister has had sufficient time to cool in the pour tunnel. Canister cooling prevents overheating the concrete in the canister handling cave. This requirement is on "HOLD" due to differences in functional classification between the PDSA (SS).and the SDS (Non-Safety). [24590-WTP-ATS-MGT-15-0174]

Verification: Verification is expected to be achieved through:

Verif. Method	Verif. By	Plan	Notes/Comments
I	ENG	Review the design to verify provision of interlocks that prevent pour tunnel bogies from traveling to the pour tunnel hatches until cooling time or temperature criteria are met.	
D	SU/ COM	Demonstrate operability of pour tunnel bogie canister cooling interlocks.	

3.12.2.2 Implementation of Active Safety Instrumented Functions

Requirement: The active safety instrumented functions for the HPH system shall be designed in accordance with the safety criterion 4.3-1, 4.3-3, 4.3-4, 4.3-6, 4.4-1 and 4.4-2 of 24590-WTP-SRD-ESH-01-001-02, Safety Requirements Document Volume II. [Safety Criterion, 4.3-1, 4.3-3, 4.3-4, 4.3-6, 4.4-1 and 4.4-2, SRD, ROIN: 1-38671, ROIN: 1-38672, ROIN: 1-38676, ROIN: 1-38677, ROIN: 1-38679, ROIN: 1-38680, ROIN: 1-38684 ROIN: 1-38685, ROIN: 1-38690, ROIN: 1-38691, ROIN: 1-38693, ROIN: 1-38694, ROIN: 8-498, ROIN: 8-3520, ROIN: 8-3521, ROIN 8-6580] (I.1.1, I.1.2, I.1.3, I.1.4)

Basis Discussion: The SRD establishes the criterion and applicable standards for the safety design. The design processes including 24590-WTP-GPG-J-015, *Safety Instrumented System Implementation* and electrical design criteria are used to ensure independence and that the design complies with the mandated standards. The completed designs are documented in Safety Systems Requirements Specification and other design documents, which are required to be verified to ensure compliance with the standards.

Verification: Verification is expected to be achieved through:

Verif. Method	Verif. By	Plan	Notes/Comments
I	ENG	Verify the Safety Systems Requirements Specifications and designs are in accordance with the criterion and standards in safety criterion 4.3-1, 4.3-3, 4.3-4, 4.3-6, 4.4-1 and 4.4-2 of 24590-WTP-SRD-ESH-01-001-02, Safety Requirements Document Volume II.	DVR report

3.12.3 System Interface Requirements

3.12.3.1 Active Safety Instrumentation, Programmable Protection System

Requirement: The HPH Instruments with active safety functions are required to interface with the PPJ or be engineered as local safety instrumented functions. Signal interfaces shall use standard 4-20 mA or digital contacts. [Section 7.1, BOD, ROIN: 1-40609] (I.1, I.1.1, I.1.2, I.1.3, I.1.4)

Basis Discussion: Appendix C provides a list of the HPH active safety instrumented functions and implementing components for the HPH system. Active safety instrumentation is implemented independently to the normal control system (PCJ/ MHJ) through the PPJ system or in local logic solvers. The PPJ is the main safety system logic solver used on WTP and includes logic programming to implement the active safety controls.

Verification: Verification is expected to be achieved through:

Verif. Method	Verif. By	Plan	Notes/Comments
I	ENG	Verify required interface included in specifications and material requisitions (MRs) used to procure active safety instruments.	

3.12.4 Other Technical, Specialty, Operations and Maintenance Requirements

3.12.4.1 Accessibility for Calibration, Testing, and Inspection

Requirement: The HPH system design shall provide the capability to access and perform remote (in cave) or direct (out cave) calibration, periodic functional testing, and inspections of equipment and components during normal operation in areas that are ALARA. [Sections 6.7, 8.1.2, 9.12, 12.6.3, BOD, ROIN: 1-40577, ROIN: 1-40729, ROIN: 1-41030, ROIN: 1-41328][Section 9.1, ORD, ROIN: 8-4346].

Basis Discussion: None

[ALARA]

Verification: Verification is expected to be achieved through:

Verif. Method	Verif. By	Plan	Notes/Comments
I	ENG	Review design for configurations that will facilitate replacement and removal, or remote calibration, of equipment in areas that are ALARA.	Document in an evaluation/assessment. Plant engineering to participate and/or review evaluation/assessment.

3.12.4.2 Non-Safety Interlocks

3.12.4.2.1 HVAC Support Interlocks

Requirement: Interlocks shall be provided to prevent the following doors or hatches from being open simultaneously: [Sections 7.3.4, 9.6.2, 12.4.4, BOD, ROIN: 1-40647, ROIN: 1-41279] (J.1.4)

- Canister handling cave export hatch HDH-HTCH-00003, canister handling cave import hatch HRH-HTCH-00001, Pour tunnel 1 hatch HPH-HTCH-00001, Pour tunnel 2 hatch HPH-HTCH-00002 (only one may be open at a given time)
- Crane maintenance area shield door pair HPH-DOOR-00005/00008 and crane decontamination area shield door pair HPH-DOOR-00001/00004
- Crane decontamination area shield door pair HPH-DOOR-00001/00004, and hatches HDH-HTCH-00003, HRH-HTCH-00001, HPH-HTCH-00001, or HPH-HTCH-00002
- Bogie maintenance area shield door HPH-DOOR-00002 and pour tunnel hatch HPH-HTCH-00001
- Bogie maintenance area shield door HPH-DOOR-00003 and pour tunnel hatch HPH-HTCH-00002
- Posting port in-cave shield door and posting port out-cave shield door
- Glovebox outer airlock door and glovebox inner airlock door

Basis Discussion: To ensure the proper operation of facility HVAC systems achieving negative pressure to provide cascade airflow from areas with low contamination potential to areas with high contamination potential, doors and hatches are prevented from being open simultaneously. This control is subject to automatic control via interlocks. Interlock functionality may be accomplished by hardware, software, or a combination of both.

[ALARA]

Verification: Verification is expected to be achieved through the following:

Verif. Method	Verif. By	Plan	Notes/Comments
I	ENG	Review of design to verify interlocks are provided for the listed doors or hatches.	
D	SU/ COM	Demonstrate the operability of interlocks for the listed doors or hatches.	

3.12.4.2.2 Equipment Protection Interlocks

Requirement: The following interlocks shall be provided to prevent damage to HPH equipment: [Section 7.3.4, BOD, ROIN: 1-40647](H.1.4)

- Prevent canister handling cave process cranes HPH-CRN-00001 and 00002 from passing through the crane maintenance area or crane decontamination area shield door apertures unless the associated shield doors are open, the crane hook is raised, and the crane trolley is aligned with the horizontal door aperture.
- Prevent horizontal crane shield doors HPH-DOOR-00004 and 00005 from opening or closing unless their co-located vertical shield is closed.
- Prevent vertical crane shield doors HPH-DOOR-00001 and 00008 from opening or closing unless their co-located horizontal shield door is open.

Basis Discussion: These interlocks prevent HPH cranes and bogies from inadvertently impacting shield doors or aperture walls. Interlock functionality may be accomplished by hardware, software, or a combination of both.

Verification: Verification is expected to be achieved through the following:

Verif. Method	Verif. By	Plan	Notes/Comments
I	ENG	Review of design to verify interlocks are provided to prevent the canister handling cave process cranes and pour tunnel bogies from passing through door apertures until anti-collision permissives are met.	
D	SU/ COM	Demonstrate the operability of canister handling cave crane and pour tunnel bogie interlocks.	

3.12.4.2.3 Bogie to Hatch Interlocks

Requirement: Interlocks shall be provided to prevent the pour tunnel hatches from opening unless a bogie is positioned beneath the hatch. [Section 7.3.4, BOD, ROIN: 1-40647](H.1.4)

- Pour tunnel hatches (HPH-HTCH-00001, -00002)

Basis Discussion: The interlock ensures a bogie is positioned to receive or offload a canister when the hatch opens. Interlock functionality may be accomplished by hardware, software, or a combination of both.

Verification: Verification is expected to be achieved through the following:

Verif. Method	Verif. By	Plan	Notes/Comments
I	ENG	Review of design to verify bogie-to-hatch interlocks are provided for the pour tunnel hatches.	
D	SU/ COM	Demonstrate the operability of bogie-to-hatch interlocks.	

3.12.4.2.4 Local/Maintenance Mode

Requirement: Equipment operated under MHJ control shall have a local/maintenance mode that allows direct actuation of the equipment at the local control panel, disregards MHJ commands and interlocks, maintains independent protection interlocks, and provides a local/remote status signal to the MHJ. [Sections 11.10, 11.12.3.6, ORD, ROIN: 8-6071, ROIN: 8-6072, ROIN: 8-6073, ROIN: 1-40012][Section 7.3.5.3, BOD, ROIN: 1-40658]

- Shield doors (HPH-DOOR-00001, -00002, 00003, -00004, -00005, -00008)
- Hatches (HPH-HTCH-00001, -00002)
- Cranes and associated hoists (HPH-CRN-00001, -00002)
- Crane cable reels (HPH-RCVY-00007, -00009)
- Bogies (HPH-TRLY-00001, -00004, -00010, -00011)
- Locking Bolts (HPH-TWDVC-00003, -00004, -00015, -00016)

Basis Discussion: Local/maintenance mode allows equipment to be operated for local control maintenance/diagnostic purposes. Disregarding MHJ commands protects personnel and equipment from remotely-initiated operation. Independent protection interlocks, which prevent equipment damage from incorrect

operation, include but are not limited to: end stop interlocks which prevent over travel, over speed interlocks, over or under voltage relays, over temperature switches, and variable or adjustable speed drive fault relays.

Verification: Verification is expected to be achieved through the following:

Verif. Method	Verif. By	Plan	Notes/Comments
I	ENG	Review equipment local control panel* design to verify required local/maintenance mode features and functions are provided.	*Where motor starters are located within a WTP motor control center, the motor control center functions as the local control panel.
D	SU/ COM	Demonstrate the operability of local/maintenance mode features and functions during operation from the local control panels.	

3.12.4.2.5 Local Control Interlocks

Requirement: Local control stations for the following equipment shall include independent protection interlocks. [Section 11.10, ORD, ROIN: 8-6073]

- Cranes (HPH-CRN-00001, -00002, -00009, -00012, -00013)
- Posting Port (HPH-TWDVC-00009)
- Shield doors (HPH-DOOR-00001, -00002, -00003, -00004, -00005, -00008)
- Hatches (HPH-HTCH-00001, -00002)
- Locking Bolts (HPH-TWDVC-00003, -00004, -00015, -00016
- Weld Station Equipment
- Flange Conditioning Tool

Basis Discussion: The listed equipment can be operated at local control points. To prevent damage from incorrect operation, device failure, or other undesired conditions, the local control station has independent protection interlocks to prevent damage to the equipment. Independent protection interlocks include, but are not limited to: end stop interlocks which prevent over travel, over speed interlocks, over or under voltage relays, over temperature switches, and variable or adjustable speed drive fault relays.

Verification: Verification is expected to be achieved through the following:

Verif. Method	Verif. By	Plan	Notes/Comments
I	ENG	Review the equipment's local control panel* design to verify incorporation of independent protection interlocks.	*Where motor starters are located within a WTP motor control center, the motor control center functions as the local control panel.
D	SU/ COM	Demonstrate the operability of the independent protection interlocks during operation from the local control panel.	

3.13 Other SSC Requirements

3.13.1 Mission and Functional / Performance Requirements (incl. states/modes)

3.13.1.1 Canister Buffer Rack and Canister Cooling Rack

3.13.1.1.1 Fixed Guides

Requirement: The canister buffer rack and canister cooling rack shall have passive fixed guides to facilitate loading of the canister and all edges of the guides that come in contact with the canister shall have a minimum of a 1/32 in. radius or chamfer. [Key Attributes for Design Table, WAI Qualification Plan for Canister Racks, ROIN: 54-3872, ROIN: 54-3873]

Basis Discussion: The guides direct the canister into position in the event that the canister centerline is not directly in-line with the rack. The canister rack provides > 1 in. of clearance all the way around a canister when it is located at the center of the canister position. [ALARA]

Verification: Verification is expected to be achieved through:

Verif. Method	Verif. By	Plan	Notes/Comments
I	ENG	Review design to verify that the canister storage rack has fixed guides with a minimum of a 1/32 in. radius or chamfer.	Ref. WAI Qualification Plan for HLW Canister Racks

3.13.1.1.2 Surface Finish

Requirement: The surfaces of the canister buffer rack and canister cooling rack that contact the canister shall have a surface finish of 63 μin. or better. [Key Attributes for Design Table, WAI Qualification Plan for Canister Racks, ROIN: 54-3875]

Basis Discussion: None. [ALARA]

Verification: Verification is expected to be achieved through:

Verif. Method	Verif. By	Plan	Notes/Comments
I	ENG	Review design to verify that surfaces of the canister storage rack that contact the canister have a surface finish of 63 μin. or better.	Ref. WAI Qualification Plan for Canister Racks

3.13.1.1.3 Canister Buffer Rack and Canister Cooling Rack Seismic Design

Requirement: The canister buffer rack and canister cooling rack shall be designed in accordance with DOE-STD-1020-94, ANSI/AISC N690, and AISC M016, as applicable, so as to maintain the storage configuration of IHLW canisters. [Safety Criterion 4.1-3, SRD, ROIN: 1-38653][Section 4.4.10, 4.4.10.4, 5.6.8, PDSA – HLW Facility, ROIN 40-9672, ROIN: 45-31064, ROIN: 45-31856]

Basis Discussion: Typically, ANSI/AISC N690 is applied to SC-I and SC-II SSCs and AISC M016 is applied to SC-III and SC-IV SSCs. DOE-STD-1020-94 is generally applicable to these SSCs. The rack's ability to maintain canister configuration is addressed within structural/seismic design.

Verification: Verification is expected to be achieved through:

Verif. Method	Verif. By	Plan	Notes/Comments
I	ENG	Review of design to verify structural analysis conforms with DOE-STD-1020-94, ANSI/AISC N690, and AISC M016, as applicable, and that the design conforms with the analysis.	

3.13.1.1.4 Canister Storage

Requirement: The system shall provide the buffer area for out-of-specification canisters. [Section 14.12, ORD, ROIN: 1-40077]

Basis Discussion: None

Verification: Verification is expected to be achieved through:

Verif. Method	Verif. By	Plan	Notes/Comments
I	ENG	Review the design to ensure the system provides buffer area for out-of-specification canisters.	

3.13.1.1.5 Canister Storage Capacity

Requirement: The system design shall provide sufficient canister storage capacity to allow filled canisters to cool to the threshold temperatures for lid welding, and for export to system HDH, while supporting facility glass production rates. (A.2, A.7, A.11, A.13, A.22)

Basis Discussion: Canister flange temperatures must be below 350°F prior to lid welding, and the canister surface temperatures must be below 212°F prior to rinsing the canister in system HDH.

Verification: Verification is expected to be achieved through:

Verif. Method	Verif. By	Plan	Notes/Comments
I	ENG	Perform an analysis to determine the number of canister storage positions necessary to facilitate canister cooling and support facility throughput.	
A	ENG	Review the design to verify the number of canister storage positions meets or exceeds the minimum number necessary to support facility throughput.	

3.13.1.2 Canister Recovery

Requirement: The HPH design shall include the capability to recover a dropped canister. (L.1)

Basis Discussion: A canister recovery tool (HEH-RCVY-00005) is used with the canister handling cave crane to recover a dropped canister. Design capability includes the ability to import the recovery tool and for the recovery tool to interface with the overhead crane.

Verification: Verification is expected to be achieved through the following:

Verif. Method	Verif. By	Plan	Notes/Comments
I	ENG	Review the design to verify incorporation of a canister recovery tool.	
D	SU/ COM	Demonstrate canister recovery capability in accordance with 24590-WTP-PL-RACT-RT-0001, *WTP Remotability Verification Plan.*	

3.13.2 Nuclear Safety, ALARA, Environmental and Other Regulatory Requirements

3.13.2.1 Canister Buffer Rack and Canister Cooling Rack

3.13.2.1.1 Canister Surface Temperatures

Requirement: The canister buffer rack and canister cooling rack shall be designed to withstand canister surface temperatures during normal, off normal events, and accident conditions. [Section 4.4.10, 5.6.8, PDSA – HLW Facility, ROIN: 40-9672, ROIN: 40-9676]

Basis Discussion: The rack must store canisters during thermal upset to preclude thermal environments that compromise the structural integrity of the HLW facility.

Verification: Verification is expected to be achieved through:

Verif. Method	Verif. By	Plan	Notes/Comments
A/T	ENG/SUP	Analysis or testing performed on safety SSCs to demonstrate capability to withstand thermal loads incurred under normal, off normal, and accident conditions.	EQPs will be prepared for all safety components. Refer to the latest revision of 24590-WTP-PD-ENG-0001, *Equipment Qualification, Program Description* for additional information. This is expected to be documented in the EQPs.
I	ENG	Review of design of safety SSCs to verify conformance to the results of the analysis or testing.	May be accomplished by EQP or separate evaluation/assessment.

3.13.3 System Interface Requirements

3.13.3.1 Piping Codes and Standards

Requirement: The HLW Facility HPH piping design, fabrication, inspection, and testing of the piping shall be in accordance with ASME B31.3, Process Piping, 1996 edition, as tailored in the SRD. [Sections 11.1.2, 11.7.1, 11.7.6, BOD, ROIN: 40-10528, ROIN: 1-41204, ROIN: 45-22820] [Appendix C, SRD, ROIN: 2-22488]

Basis Discussion: The pipe, flanges, and valves are in accordance with the long stock code descriptions listed in applicable pipe class specifications used for the HLW HPH system. 24590-WTP-3PS-P000-T0001 provides a summary listing of all the pipe class specifications used on WTP. Each pipe class sheet lists the design code used for the specific pipe class specification. The pipe, fittings, flanges, and valves used are in accordance with the design code listed on the specific pipe class specification. There are specific numbered in-line components

provided by other engineering disciplines that are in accordance with the design code requirements listed in the applicable engineering specification for the specific component.

Verification: Verification is expected to be achieved through the following:

Verif. Method	Verif. By	Plan	Notes/Comments
A	ENG	Perform an analysis of the piping design in accordance with ASME B31.3.	
I	ENG	Review design to verity conformance of the analysis results.	Document in an evaluation/assessment that may be performed using a sampling basis or documented in design verification report or requirements verification matrix.

3.13.4 Other Technical, Specialty, Operations, and Maintenance Requirements

See sections 3.4.4 and 3.12.4 for additional other technical, specialty, and maintenance requirements.

3.14 Relevant Codes and Standards

3.14.1 Codes of Record

Table 3-6 identifies relevant external codes and standards applicable to the HPH design. These are selected from those documents that comprise the Code of Record (COR) as established in 24590-WTP-RPT-ENG-01-001, Technical Baseline Description, i.e., the WTP Contract, the Basis of Design (BOD), and the Safety Requirements Document Volume II (SRD). Use of these documents is typically invoked in the design process through the documents identified in Section 3.14.2. Beyond inclusion here, no attempt is made in this document to extract individual design requirements from these documents for allocation to SSCs.

In some cases the expected means of verification may be established on the basis of tests or other criteria required by the codes and standards. This does not necessarily include verification or testing more appropriately defined in the procurement of individual sub-systems or components, or which is a routine activity defined by specifications and/or procedures used by construction and startup.

Table 3-6 HPH Applicable Codes & Standards

Implementing Codes and Standards: [Contract No. DE-AC27-01RV14136, WTP Contract]
• Not applicable
Implementing Codes and Standards: [24590-WTP-DB-ENG-01-001, Rev 2, Basis Of Design]
• ANSI N14.6, Radioactive Materials Special Lifting Devices for Shipping Containers Weighing 10.000 Pounds.
• ANSI/AISC N690-1994, *Specification for the Design, Fabrication, and Erection of Steel Safety-Related Structures for Nuclear Facilities.*
• ASME B30.2, Overhead and Gantry Cranes (Top Running Bridge, Single or Multiple Girder, Top Running Trolley Hoist).
• ASME B30.11, Monorails and Underhung Cranes.
• ASME B30.16, Overhead Hoists (Underhung Cranes).
• ASME NOG-1, Rules for Construction of Overhead and Gantry Cranes.

• AWS D1.1, *Structural Welding Code - Steel.*
• AWS D1.6, *Structural Welding Code - Stainless Steel.*
• CMAA 70, *Specifications for Top Running Bridge and Gantry Type Multiple Girder Electric Overhead Traveling Cranes*
• IESNA RP-7, *Industrial Lighting*
• NFPA 70-1999, *National Electrical Code*
• NFPA 101-1997 and 2000, *Life Safety Code*
• OSHA 29 CFR 1910, *Occupational Safety and Health Standards*
• WAC 173-303, *Washington Administrative Code – Dangerous Waste Regulations*
Implementing Codes and Standards: [24590-WTP-SRD-ESH-01-001-02, Rev 7c, Section 4, *SRD*]
• AISC M016, *ASD Manual of Steel Construction*
• ANSI/ANS 58.8-1994, *Time Response Design Criteria for Safety-Related Operator Actions.*
• ANSI/ISA-67.04.01-2006, *Setpoints for Nuclear Safety-Related Instrumentation,* as tailored in Appendix C of the SRD.
• ANSI N42.18-1980 (R1991), *Specification and Performance of On-Site Instrumentation for Continuously Monitoring Radioactivity in Effluents.*
• DOE-STD-1020-94, *Natural Phenomena Hazards Design and Evaluation Criteria for Department of Energy Facilities,* as tailored in Appendix C.
• DOE-STD-1066-1997, *Fire Protection Design Criteria,* as tailored in Appendix C of the SRD.
• IBC - 2000, *International Building Code*
• IEEE 323-1983, *Qualifying Class IE Equipment for Nuclear Power Generating Stations,* as tailored in Appendix C of the SRD.
• IEEE 338-1987, *Standard criteria for Periodic Surveillance Testing of Nuclear Power Generating Station Safety Systems,* as tailored in Appendix C of the SRD.
• IEEE 344-1987 (R1993), *IEEE Recommended Practice for Seismic Qualification of Class 1E Equipment for Nuclear Power Generating Stations,* as tailored in appendix C of the SRD
• IEEE 379-1994, *Application of the Single Failure Criterion to Nuclear Power Gene3rating Station Safety Systems,* as tailored in Appendix C of the SRD.
• IEEE 344-1987 (R1993), *IEEE Recommended Practice for Seismic Qualifications of Class 1E Equi8pment for Nuclear Power Generating Stations,* as tailored in Appendix C of the SRD.
• IEEE 379-1994, *Application of the Single Failure Criterion to Nuclear Power Generating Station Safety Systems,* as tailored in Appendix C of the SRD.
• IEEE 384-1992, *Standard Criteria for Independence of Class 1E Equipment and Circuits,* as tailored in Appendix C of the SRD.
• IEEE 497-2002, *Standard Criteria for Accident Monitoring Instrumentation for Nuclear Power Generating Stations,* as tailored in Appendix C of the SRD.
• IEEE1023-88, *Guide for the Application of Human Factors Engineering to Systems, Equipment, and Facilities of Nuclear Power Generating Stations.*
• NFPA 70-1999, *National Electrical Code*
• NFPA 69-2002, *Standard on Explosion Prevention Systems*, as tailored in Appendix C of the SRD
• NFPA 801-2003, *Standard for Fire Protection for Facilities Handling Radioactive Materials*, as tailored in Appendix C of the SRD.

3.14.2 WTP Design Criteria, Design Guides, and General Specifications

Table 3-7 identifies relevant discipline design criteria, guides, and general specifications applicable to the HPH system. Use of these documents to develop the detailed design of SSCs is governed by engineering procedures. The majority of requirements contained within these documents are derived from external codes and standards or are specified methods and approaches to achieve standardization and consistency of design. Beyond inclusion here, no attempt is made in this document to extract individual design requirements from these documents for tracing and verification, or to define how direction provided by these documents is applicable and allocated (or not) to individual SSCs.

Table 3-7 WTP Design Criteria, Guides, and General Specifications Applicable to HPH

Document Number	Title
Design Criteria Documents:	
24590-WTP-DC-M-06-001	Mechanical Systems Design Criteria
24590-WTP-DC-E-01-001	Electrical Design Criteria
24590-WTP-DC-E-06-002	Design Criteria for Independence of Safety Equipment and Circuits
24590-WTP-DC-ENG-06-001	Design Criteria for Environmental and Natural Phenomena Hazard Qualification of Structures Systems and Components
24590-WTP-DC-ST-04-001	Seismic Analysis and Design Criteria
Design Guides:	
24590-WTP-GPG-ENG-086	Equipment Environmental Qualification
24590-WTP-GPG-ENG-0103	Equipment Seismic Qualification
24590-WTP-GPG-ENG-0109	Accessibility Review of Equipment and Components
24590-WTP-GPG-ENG-0119	Isometric Drawings Production
24590-WTP-GPG-ENG-0123	Disposition of Hard to Reach Spools
24590-WTP-GPG-ENG-0127	Processing Engineering Calculations
24590-WTP-GPG-ENG-0129	Waste Acceptance Impacting Determination
24590-WTP-GPG-ENG-0130	Waste Acceptance Impacting Item Qualification Plan
24590-WTP-GPG-ENG-0141	WTP Radiation Damage Thresholds for Non-Metallic Materials
24590-WTP-GPG-ENG-0150	Plant Design/Mechanical Systems Equipment Interfaces: Terminal End Equipment
24590-WTP-GPG-ENG-0153	Safety Instrumentation - Independent Protection Layer Identification
24590-WTP-GPG-J-005	Control Systems Interfaces
24590-WTP-GPG-J-014	Control Systems Design Process Guide
24590-WTP-GPG-J-015	Safety Instrumented System Implementation
24590-WTP-GPG-J-017	WTP Seismic Category Application to C&I Systems
24590-WTP-GPG-J-0057	Setpoint Calculations
24590-WTP-GPG-M-036	Determining Quality Level and Seismic Category Classification of Sub-Components, Assemblies, Sub-Assemblies, and Parts
24590-WTP-GPG-M-052	Specifying Design Cycles for Equipment and Piping

Document Number	Title
24590-WTP-GPG-PL-002	Plant Design Material Control Guide
24590-WTP-GPG-SRAD-001	Design Guide for ALARA
Specifications:	
24590-HLW-3PS-30-T0001	Engineering Specification for HLW Canister Racks
24590-WTP-3PS-ADDC-T0002	Engineering Specification for HLW System Transfer Hatches, Hatch Drives, Hatch Pushrod Assemblies, and Floor Penetration Liners
24590-WTP-3PS-ADDH-T0001	Engineering Specification for HLW/PTF Bogie Shield Doors
24590-WTP-3PS-ADDH-T0006	Engineering Specification for QL Crane Maintenance Shield Doors for HLW and PTF
24590-WTP-3PS-M000-T0006	Engineering Specification for WTP Facility Posting Port
24590-WTP-3PS-M000-T0007	Engineering Specification for WTP Facility Posting Port Glovebox
24590-WTP-3PS-MJKG-T0002	Engineering Specification for CMAA 74 & CMAA 70 Top Running & Under Single/Multiple Girder Cranes
24590-WTP-3PS-MQL0-T0003	Engineering Specification for Special Grapples and Lifting Devices
24590-WTP-3PS-MQR0-T0002	Engineering Specification for HLW Standardized Bogies
24590-WTP-3PS-MV00-T0004	Engineering Specification for HLW Canister Lid Welder
24590-HLW-3PS-MX00-T0001	Engineering Specification for QL Shielded Personnel Access Doors
24590-HLW-3PS-NW00-T0001	Engineering Specification for System HPH Canister Welding Station
24590-WTP-3PS-G000-T0015	Engineering Specification for Environmental Qualification of Mechanical Equipment
24590-WTP-3PS-JQ00-T0004	Engineering Specification for Management of Supplier Software
24590-WTP-3PS-JQ00-T0005	Engineering Specification for Management of Supplier Safety Software
24590-WTP-3PS-JQ06-T0005	Engineering Specification for Environmental Qualification of Control and Electrical Systems and Components
24590-WTP-3PS-JQ07-T0001	Engineering Specification for Instrumentation for Package Systems
24590-WTP-3PS-JQ08-T0001	Engineering Specification for Construction and Installation of Controls and Instrumentation
24590-WTP-3PS-SS90-T0001	Engineering Specification for Seismic Qualification of Seismic Category I/II Equipment and Tanks
24590-WTP-3PS-SS90-T0002	Engineering Specification for WTP Project Tailoring of ANSI/AISC N690 & IEEE 323, 344 & 382

4 System Description

This section summarizes design output information, describing the current design and the operational and maintenance aspects of the system. The information provided below does not contain design requirements and should not be used as design input. The description of the current design contained in this section may not fully align with design requirements. This is acceptable within the context of this document. Areas of misalignment

are to be resolved through appropriate mechanisms and the SDD updated to reflect changes made to the design. Changes to the descriptive text will be made following the changes to the lower tiered Engineering documents.

4.1 Configuration Information

4.1.1 Description of System, Subsystems, and Major Components

Section 4.1.3 contains a general description of the rooms that are part of the HPH system and a brief overview of the process operations taking place in each area. A detailed description of each piece of equipment is contained in Sections 4.1.1.1 through 4.1.1.5, while Section 4.2 contains a more detailed description of system process.

4.1.1.1 Canister Handling Cave Equipment

4.1.1.1.1 Canister Handling Cave Cranes

The canister handling cave contains two 6 ton capacity overhead process cranes (24590-HLW-MJ-CRN-00001 and 24590-HLW-MJ-HPH-CRN-00002) operating on a duty/standby principle, that are used to transport canisters between various work stations (see Figure 4-1). Since the lower crane (24590-HLW-MJ-CRN-00001) has a shorter span, and is not able to access the southernmost buffer rack canister storage positions, the lower crane is designated as the standby unit. [3.5.1.4]

Figure 4-1 Canister Handling Cave Cranes
(Elevation View Looking West)

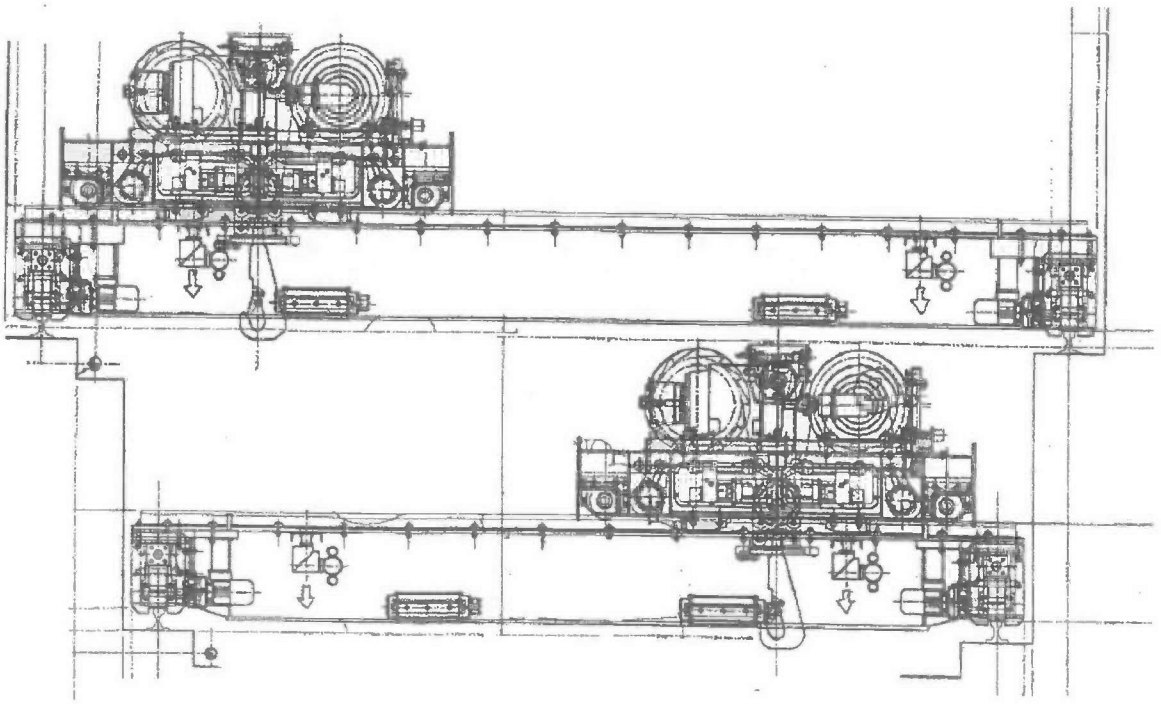

Both cranes (non-safety) are classified as seismic category II, the seismic safety function being that they must remain on the rails during and after a seismic event. There is no requirement for the cranes to be operable post-seismic.

Both cranes have a passive waste acceptance impacting (WAI) requirement that is met by installing drip trays (or using other design features as appropriate) to reduce the potential for organics to enter an unlidded canister. The sources of organics are the gearboxes and the hydraulically operated crane recovery system.

The cranes are designed to have a nominal plant life of 40 years to minimize worker exposure by reducing maintenance and replacement activities. Where consumable or commercially available components (e.g. bearings, seals etc.) do not have a design life of 40 years, those items are designed to be easily replaceable. [3.4.1.4]

Power and control signals are fed to the cranes via cable reeling systems, one for each crane, that are located against the south wall of the crane maintenance area. To facilitate maintenance, the cable reel is powered by a through-wall shaft, the reel drive motor and slip-ring electrical and control connections being located in the adjacent C2/R2 corridor. A series of rollers fixed to the crane support steel work support the cable between the cable reel and the crane. There is no on-board logic, all power and control cables are routed to the crane control panel. The cranes would normally be controlled from MHJ system local operator interface (LOI) panels HPH-PNL-00013/00009 located in corridor HC0209, or from HPH-PNL-00008 located in corridor HC0208. All crane movements are initiated by the operator, there no automatic MHJ control sequences associated with the cranes. [3.12.1.1]

To prevent equipment damage an MHJ interlock inhibits crane movement across the decontamination and maintenance shield door thresholds unless the crane trolley is aligned with the horizontal shield door opening, and the crane hook is raised. An anti-collision device prevents the lower crane colliding with a load being transported by the upper crane. The device consists of a trigger arm mounted on the upper crane that cuts power to the cranes if it contacts a target mounted on the lower crane. The MHJ also uses a series of fixed targets and crane mounted proximity switches to reduce bridge and trolley speed as ends-of-travel and shield door positions are approached.

Each crane is fitted with a powered rotating hook. Lights and cameras are fitted to the main gantry beams and trolleys to provide the crane operator with remote viewing capability. The cameras have pan/tilt and zoom capability.

Recovery drives are fitted to the cranes to enable them to be retrieved from the C5/R5 canister handling cave in the event that the primary drives fail. Recovery drives are fitted to the hoist, trolley cross travel and bridge long travel functions. The trolley and bridge recovery wheel units are mounted on an eccentric cam and are deployed (rotated about the eccentric) hydraulically via the MHJ. The recovery wheel drive motors are mounted to the crane bridge and are connected to the wheel units by universal couplings. In addition, the cranes may be winched back into the crane maintenance area using the cable reels. [3.5.1.3]

Engineering Specification 24590-HLW-3PS-MJKG-T0002 contains the technical requirements for the cranes.

4.1.1.1.2 Grapple

The canister grapple (24590-HLW-FN-HPH-TOOL-00001, 24590-HLW-FN-HPH-TOOL-00017 and 24590-HLW-FN-HPH-TOOL-00018), Figure 4-2, is three-jaw lifting device designed to engage the underside of the canister flange. The jaws are opened and closed mechanically by a combination of linkages, slides and a rotating ratchet assembly. The mechanism is actuated by a plate that contacts the canister flange as the grapple is lowered onto the top of the canister, causing the jaws to close. To retract the jaws, the weight of the canister has to be

removed from the grapple twice before the jaws will retract and release the canister. This two "set-down" arrangement is designed to prevent inadvertent release of the canister should the canister be lowered onto an obstruction. A position indicator is provided on top of the grapple to show the operator where the grapple is in the "set-down" sequence.

An MSM operated override is provided to release the grapple from a canister should the sequencing mechanism fail to retract the jaws. The weld station MSMs would be used to actuate the override. The grapple has a rated lifting capacity of 10,000 lbs.

The grapples have both passive and performance WAI requirements. The passive requirement is met by fabricating the grapple from stainless steel and by using guides and smoothly profiled surfaces to minimize any potential damage to the canister during normal operations. WAI performance requirements will be demonstrated by confirming that the grapple can remotely engage and disengage the canister, and by confirming the correct operation of the two "set-down" design described above.

Three grapples are provided; one dedicated to each of the 6 ton process cranes, and one spare.

Engineering Specification 24590-WTP-3PS-MQL0-T0003 contains the technical requirements for the grapple.

Figure 4-2 HLW Canister Grapple

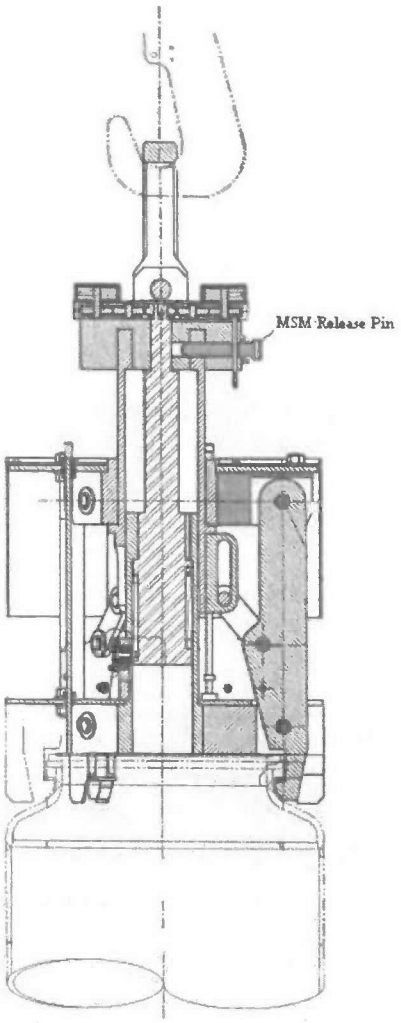

4.1.1.1.3 Canister Cooling Rack

The purpose of the canister cooling rack (24590-HLW-MH-MHAN-00014), Figure 4-3, is to store hot glass filled canisters until they cool sufficiently to be transferred to the welding station. The rack is manufactured from stainless steel and is designed to store 24 glass filled canisters, each weighing a maximum of 9260 lbs. The canisters are stored in the northern side of the rack; the southern side of the rack structural steelwork is used to support the weld table. The rack is designed in two sections; the top section supports the canister laterally, the bottom section supports the canister weight and prevents lateral movement of the canister base. The upper and lower sections are not connected to each other. Due to the time taken to complete the glass pour (approximately 20 hours at 7.5 MTG/day), the canister surface temperature will be higher at the top than the bottom at the end of the glass pour. The rack is designed for a canister base temperature of 350°F, and a top temperature of 700°F. In order to protect the rack and concrete from thermal impacts, glass filled canisters are required to cool in the pour tunnel prior to being transferred into the canister handling cave. A Safety Significant interlock ensures that the

canister has cooled sufficiently in the pour tunnel prior to being transferred to the racks (see Section 4.1.1.3.1). [3.12.2.1.2]

The rack is classified as Safety Significant and seismic category II, its safety function is to remain upright during and after a seismic event in order to prevent multiple canisters from falling and impacting the C5 boundary (walls and floors of the canister handling cave). The rack is credited with maintaining structural integrity during normal operations that will expose the rack steelwork to fluctuating temperatures. The rack is also classified as WAI (passive). WAI compliance requires features (for example, smooth surfaces, canister guides) to be built into the rack design that will act to minimize any potential damage to the canister during normal operations. [3.13.1.1.2]

There are no scheduled or routine maintenance requirements for the rack. However, to the extent possible, rack components that are not fixed to embed plates are designed to be remotely removable using the process cranes.

Engineering Specification 24590-HLW-3PS-30-T0001 contains the technical requirements for the racks.

Figure 4-3 Canister Cooling Rack

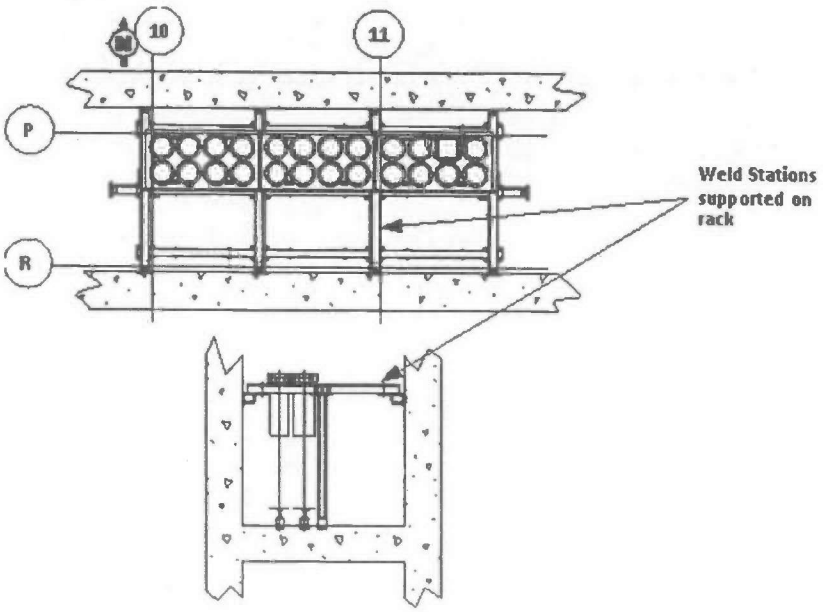

4.1.1.1.4 Canister Buffer Rack

The purpose of the canister buffer rack (24590-HLW-MH-HPH-MHAN-00017), Figure 4-4, is to store lidded canisters prior to them being transferred to the HDH system. The rack has a capacity of 24 canisters and is designed to the same temperature, seismic, safety and WAI criteria as the cooling rack. The rack may also be used as a storage area for empty canisters. [0]

Figure 4-4 Canister Buffer Rack

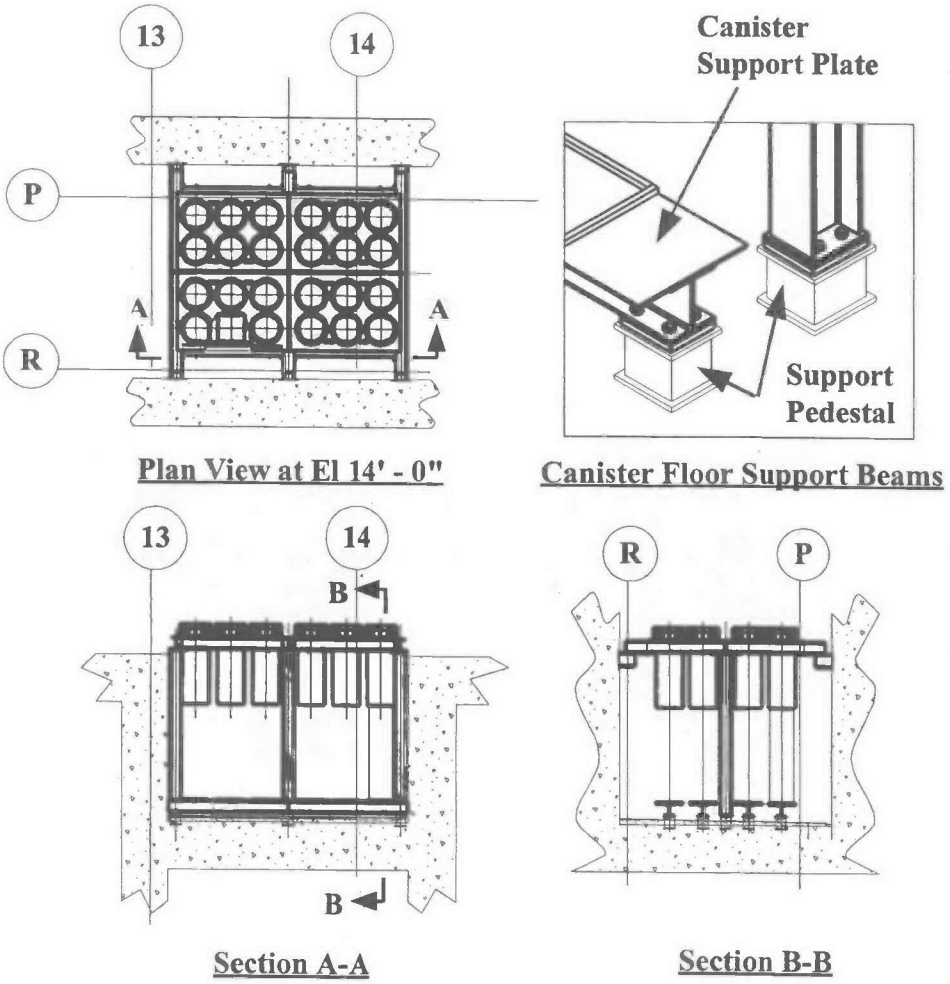

4.1.1.1.5 Pour Tunnel Hatches

The pour tunnel hatches (24590-HLW-AD-HPH-HTCH-00001 and 00002), Figure 4-5, are located on the boundary between the canister handling cave and the pour tunnels. The hatches are classified as SS. To improve reliability and maintainability the hatch design is simplified to the extent possible. The hatches run on rails and are opened and closed by through-wall drives with the motors and position instrumentation located in the adjacent C2/R2 corridor. The hatch wheel modules are factory lubed, sealed-for-life components. The hatch is driven by a

simple rack and pinion mechanism. A rack, attached to the underside of each hatch, runs on top of a pinion gear that is part of the through wall drive. Each hatch has a lifting bail that maybe be used to transfer the hatch to the decontamination and maintenance areas if required, however, there are no planned maintenance activities for the hatch in-cave components. [3.4.1.4]

The hatches are remotely controlled by MHJ LOI panels HPH-PNL-00013/00009/00008. The pour tunnel transfer hatches are not required to provide radiological shielding.

Figure 4-5 Pour Tunnel Hatch

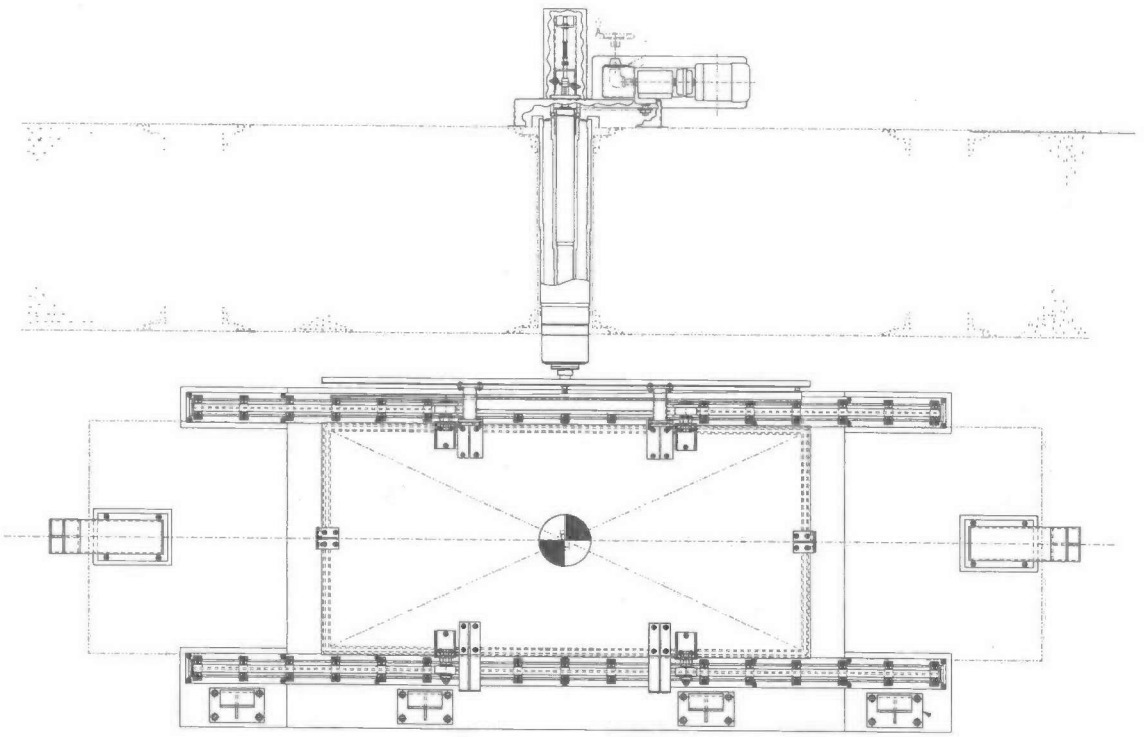

Provision for a manual override hand wheel is incorporated into the drive train design. The manual override enables personnel to manually operate the hatches through their entire range of motion from the adjacent corridor. A removable cover over the hand wheel and shaft assembly incorporates a motor cut-off switch that disables the hatch drive motor as it is removed. [ALARA]

Engineering Specification 24590-WTP-3PS-ADDC-T0002 contains the technical requirements for the hatches.

4.1.1.1.6 Weld Station Table

The weld station table (24590-HLW-MZ-HPH-BENCH-00004), Figure 4-6, serves as a remote work area for the equipment required to measure glass fill height, collect glass samples, and complete canister lid welding and follow up weld inspection. The weld table is split into three sections; the east and west sections support the east and west welding machines, while the center section interfaces with the weld station posting port and provides an

area for tool storage. The weld station table is fabricated from stainless steel and is supported on the south side of the canister cooling rack steelwork. To facilitate maintenance requirements the table is modular in design, allowing each section to be lifted directly from the rack and transported into the decontamination and crane maintenance areas using the process cranes. However, there is no planned maintenance for the weld station table; its design life is 40 years. To support remote welding operations, the east and west sections are located directly in front of a shield window and a pair of MSMs. Three through-wall cameras (PTJ-XT-3036, 3037 and 3038) provide remote viewing capability for the weld station. [3.4.1.4]

Figure 4-6 Weld Station Table

(Plan view)

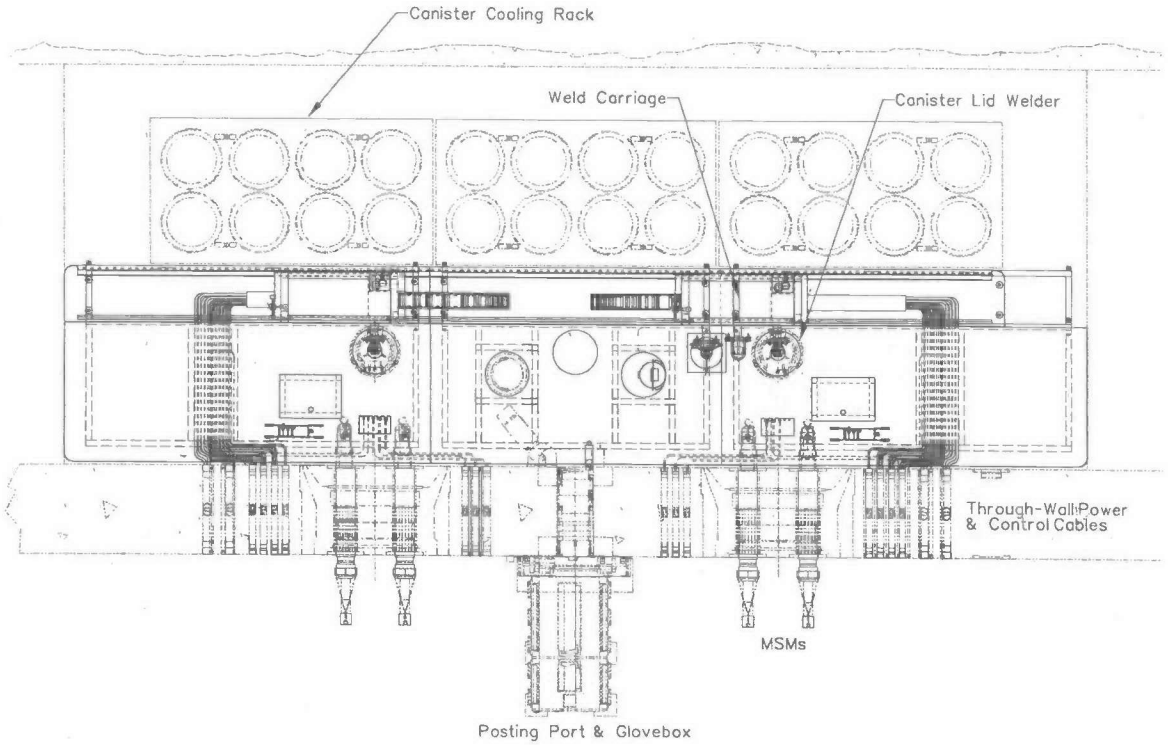

The east and west sections of the weld table are fitted with channel section rails in which the welding machine carriage runs, fixtures for managing the routing of through-wall power and controls cables, a recessed tool storage area, and a canister welding location. The center section contains two recessed storage areas, one of which houses a vacuum unit and one that houses a waste basket used to collect and export solid waste, for example spent welder torch blocks. The maximum capacity of the solid waste storage recess is 1000 lbs. A removable cover plate, designed to support a weight of 500 lbs, is provided for each location. In addition, the center section has a single canister storage position that would typically only be used to quarantine a canister if the lid weld failed inspection.

The weld table has a passive WAI function that is met by fabricating the table from stainless steel and by using guides and smoothly profiled surfaces to minimize any potential damage to the canister during normal operations.

Various miscellaneous tools will also be stored on the weld station table. These include a pneumatic needle gun and an electric or pneumatic wire brush that will be used to remove any glass that has adhered to the external surface of the canister.
Engineering Specification 24590-HLW-3PS-NW00-T0001 contains the technical requirements for the weld station.

4.1.1.1.7 Glass Level Detector

The glass level detectors (HPH-MHAN-00023 and 00038) are measuring rods used to measure the distance from the top of the canister flange to the glass surface. To comply with contractual requirements the average canister fill height must correspond to a fill volume of at least 95%; the minimum allowable fill volume is 87%. At 95% full, the glass level is approximately 12.1" below the top surface of the canister flange; an 87% fill volume equates to approximately 25.9" (see calculation 24590-HLW-M0C-30-00003). The level detector is handled using MSMs and when not in use is stored on the weld station table. The 100% fill level is at the weld between the top head and neck flange, a distance of approximately 2.25" below the top surface of the canister flange. Two glass level detectors are supplied, one for each weld station.

Engineering Specification 24590-HLW-3PS-NW00-T0001 contains the technical requirements for the glass level detectors.

Figure 4-7 Glass Level Detector

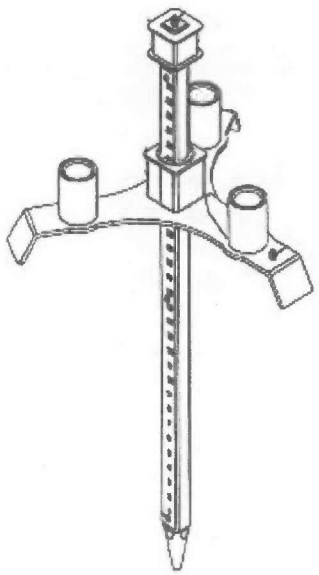

4.1.1.1.8 Glass Shard Sampling Equipment

Glass shard sampling equipment consists of a vacuum pick up tool, a shard sample tray and a consumable glass sample vial.

The vacuum pick-up tools (24590-HLW-JA-HPH-SMPLR-00001 and 00003), Figure 4-8, are compressed air driven eductor-type devices. The tools are designed to be operated using the weld station MSMs. To collect glass shards the nozzle is inserted into the top of the canister and the three-way valve is opened to allow airflow to the eductor. The airflow creates a vacuum and causes glass shards to collect on a screen inside the nozzle. The glass shards are released from the nozzle and deposited into the sample tray by shutting off the airflow to the eductor. Glass shards will be generated as the glass cools and cracks, alternatively the nozzle maybe be used to create shards by chipping at the glass surface. [3.9.4.1]

Two pick-up tools are provided, one at each weld station. The tools have an MSM compatible quick disconnect coupling that is connected to a compressed air line fed through-wall at the weld station. When not in use the tools are stored on the weld station carriages. In addition to extracting glass shards, the vacuum pickup assembly may be used to determine the glass level within the canister using a scale attached to the side of the tool.

Figure 4-8 Shard Sample Vacuum Pick-up Assembly

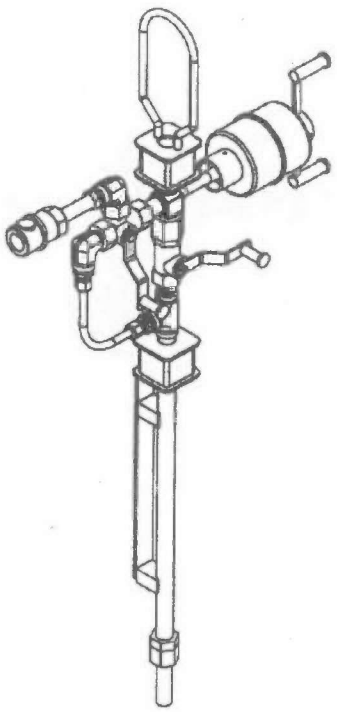

The shard sample vial tray (24590-HLW-JA-HPH-SMPLR-00002 and 00004) is used to place glass shards released from the eductor nozzle into sample vials. Up to three sample vials are placed into the tray and the hinged funnel assembly is then placed on top of the vials. The glass shards collected in the eductor nozzle are released into one of the funnels and drop into the sample vial below.

The stainless steel sample trays are designed for remote handling and operation using MSMs. A tether chain is attached to the assembly to prevent it from being dropped to the cave floor. When not in use, it is placed in a storage position on the weld station table. When in use, it is placed on the canister and supported by the canister flange. The tray weighs approximately 12 lbs.

Figure 4-9 Sample Vial Tray

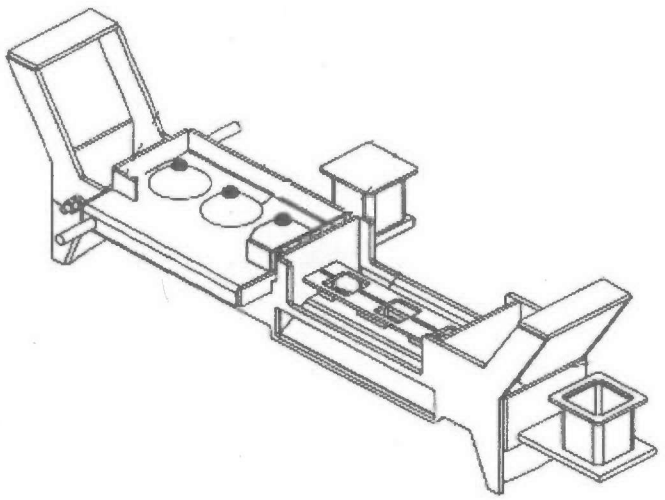

The sample vials are sized and shaped to permit remote handling by MSMs. All samples are collected in the same type of vial. The sample vials are clear glass and capable of being sealed. The sample vials are approximately 1" diameter by 2.5" long and have a capacity of approximately 25 ml.

Sample vials containing the glass samples will be placed inside a sample vial sleeve at the weld station. An MSM will be used to place the lid on the sleeve, and the sleeve will then be transferred by one of the canister handling cave cranes to the crane decontamination area. All trays hung from the crane hook will be required to transport the sleeve. The sample vial sleeve will then be removed from the tray and placed inside a shielded transfer flask (24590-HLW-HC-HPH-CNTNR-00001); see the sectional view in Figure 4-10. The crane will be used to place the shielded lid onto the flask. The lid bolts will be secured manually, and the flask will then be transported to the Analytical Laboratory for analysis. The sample vial sleeve is a removable internal component that is part of the flask. The flask is 12" high (excluding the lifting bail), 10" in diameter and approximately weighs 400 lbs. The flask is sized to contain only 1 sample vial. To support ALARA the flask is not taken into the canister handling cave; this minimizes the potential for contaminating the outside surface of the flask.

The flask will be transported manually to the Analytical Laboratory. It will be transferred out the HPH system via the hatch located in the floor of the crane maintenance area, and then lowered onto a transport cart. The flask shielding will protect personnel as the flask is transported to the Laboratory. [ALARA, 3.9.4.1]

Figure 4-10 Glass Shard Sample Transfer Flask

(Sectional view showing sample vial in the flask)

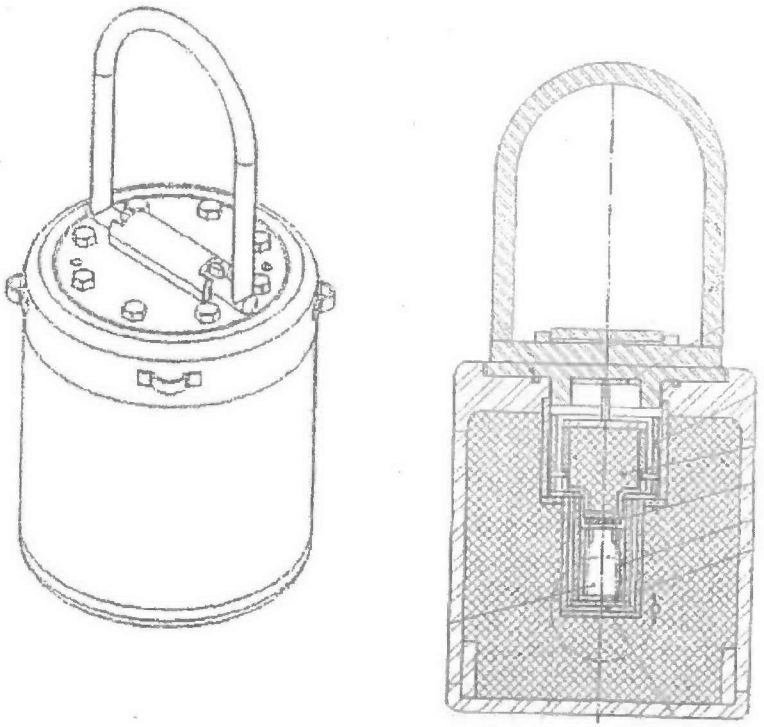

Engineering Specifications 24590-HLW-3PS-NW00-T0001 contain the technical requirements for the glass shard sampling equipment.

4.1.1.1.9 Weld Station Carriage

The function of the weld station carriage (24590-HLW-HC-WELD-00005 and 24590-HLW-HC-HPH-WELD-00009), Figure 4-11 and Figure 4-12, is to position the welding machine onto the canister flange so that the canister closure weld maybe completed. There are two weld station carriages, one serving the east weld station and one serving the west. The carriages run on rails mounted onto the weld station table. A rack is installed between the rails that interfaces with a motor driven pinion gear mounted onto the carriage, and provides the motive force to move the carriage between its park and weld positions. The welding machine is mounted to the carriage via a linear actuator that lowers the welder onto the canister, and raises the welder on completion of the lid weld.

The weld carriage movements are MHJ controlled via local operator panels HPH-PNL-00013 and HPH-PNL-00009, both panels are located in corridor HC0209, adjacent to the weld station shield windows.
To prevent equipment damage, the MHJ inhibits movement of the weld carriage unless the vertical actuator is in the raised position. Lowering of the actuator is inhibited unless the carriage is at the weld position and the welder clamps are in the open position. Raising the actuator is inhibited unless the welder clamps are open, weld in progress signal is not-present, and the welder ready to lift signal is present. The welder clamp open and weld in progress signals are generated by instrumentation associated with the welding machine.

Power and control signal cables for the weld station are routed through joggles in the canister handling cave south wall adjacent to the weld station MSM's and shield windows (see Figure 4-6). The cables are then routed along the top of the weld station table and onto a cable track before being terminated on the weld carriage.

To facilitate in-cave maintenance, components that are likely to fail, including the carriage motor, linear actuator, proximity switches and all cabling, are designed to be remotely replaceable using the weld station MSMs. The modular design approach allows maintenance to be performed without having to transfer the welding carriage out of the canister handling cave. However, the design does permit the entire weld carriage to be removed from the weld station if required. The carriage unit, welder support fixings and the linear actuator slide are fitted with lifting bails to allow each major component to be removed from the weld station using the process cranes. All cabling is terminated using MSM compatible connectors. The design also incorporates MSM compatible fasteners and alignment to facilitate remote maintenance.

Figure 4-11 Weld Station Carriage

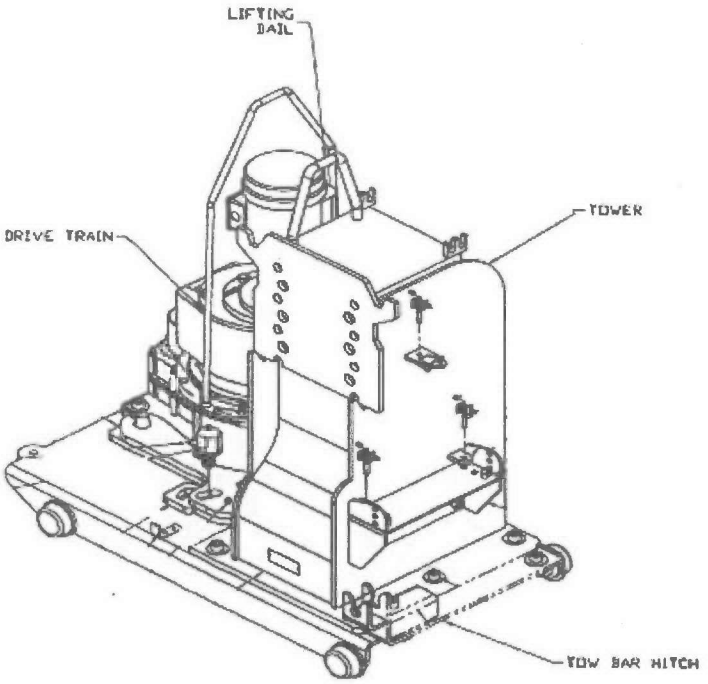

Figure 4-12 Weld Carriage Linear Actuator and Welder

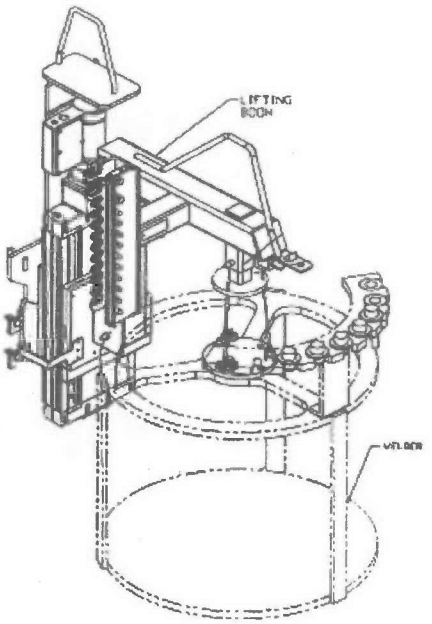

Engineering Specification 24590-HLW-3PS-NW00-T0001 contains the technical requirements for the welding station.

4.1.1.1.10 Canister Lid Welder

The HLW canister lid welding machines welds a primary and secondary lid onto the canister. The primary lid consists of a flat circular plate that locates into a grooved recess machined into the canister top flange, the secondary lid, slightly larger in diameter than the primary lid, is only fitted to the canister if the primary lid weld fails inspection and cannot be repaired.

Two welding machines (24590-HLW-HC-HPH-WELD-00004 and 00010) are provided, one for the east weld station and one for the west. The welder is shown in Figure 4-13. The welding machine is attached via cables to the weld carriage linear actuator, the cables allow for slight misalignment between the canister and the carriage weld positions. The use of the cables avoids the need for additional powered actuators/drivers to align the welder with the canister flange. The weld machine is fitted with guides to center the machine on top of the canister, final positioning is accomplished using a clamp that is closed/opened using the weld station MSMs. The MSM operated clamp simplifies the design.

The primary weld is completed using an autogenous gas tungsten arc welding process. An autogenous weld process is one that does not require filler wire. The primary lid is placed onto the canister flange using the weld station MSMs and the lid lifter (see Section 4.1.1.1.12). The weld machine then tack welds the lid to the canister in several locations prior to completing a single pass to complete the weld. The weld is deemed acceptable if the welding parameters remained within their allowable ranges and if the weld passes a visual surface inspection. The surface inspection is carried out using the weld station cameras (see Section 4.1.1.1.11). To prevent thermal distortion of the lid during the tack welding process a lid weight (15 pounds) is placed on top of the lid prior to lowering the welder on to the canister flange. The weight is designed to be handled by the weld station MSMs.

The values of the welding parameters are reported by the welder control system. If the initial primary weld fails inspection then a secondary re-melt welding pass would be completed, if this second weld failed inspection then a number options would be considered. These include 'spot' repair of the failed weld areas, or fitting a secondary lid. The machine has the capability of performing the 'spot' repair autogenously, or alternatively the wire feed mechanism maybe fitted to the welder and used to complete any necessary repairs. The wire feed mechanism may also be used to perform a full cap pass.

Figure 4-13 Canister Lid Welder

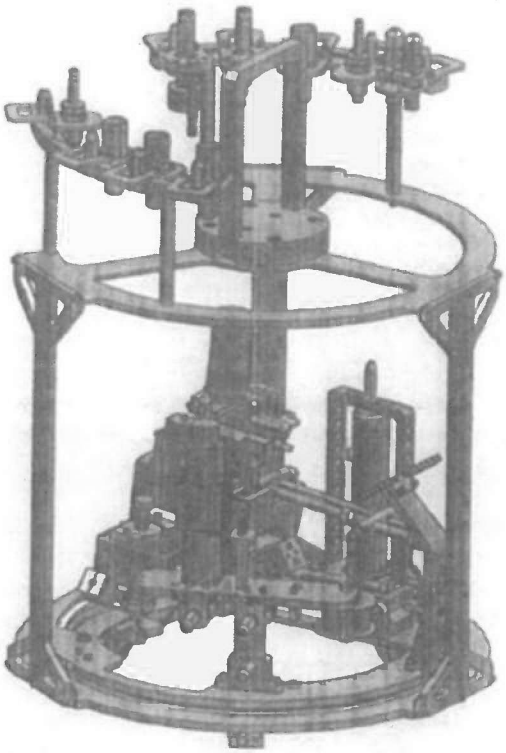

The option of fitting a secondary lid would usually only be selected after exhausting all possible primary weld repair options. The secondary lid fits over the primary lid and requires a grove to be machined into the top of the canister flange. The flange conditioning tool (see Section 4.1.1.1.17) is used to machine the flange. A secondary lid would then be placed into the machined groove using the weld station MSMs and lid lifter. The weld machine would then tack the secondary lid in place before completing an autogenous root pass followed by a wire feed cap pass. As with the primary weld, repair options for the secondary lid weld include an autogenous re-melt and using filler wire to perform 'spot' repairs or a complete cap pass.

The weld machine is controlled by vendor supplied control panels (24590-HLW-JC-HPH-PNL-00004 and 24590-HLW-JC-HPH-PNL-00018) that are located adjacent to the weld station shield windows. The MHJ does not control the weld machine, but to prevent equipment damage an MHJ interlock inhibits the weld carriage actuator raising/lowering the welding machine unless the weld machine clamps are in the open position. The clamps are used to secure the welding machine to the canister and also act as an electrical ground. The welding parameters

for each welding process are pre-programmed into the welder control system, a different set of parameters is used depending on the weld to be performed. The values of the welding parameters will be exported from the vendor data collection system and sent to the MHJ.

Power and control signals are fed to the welder through joggles in the canister handling cave south wall adjacent to the weld station MSM's and shield windows (see Figure 4-6). The cables are then routed along the top of the weld station table and onto cable track before being terminated on the welding machine. The control of the welding machine, set-up steps required to perform each weld type, equipment recovery, and calibration requirements, are documented in 24590-CM-POA-HCHH-00004-12-00001 *Operating Instructions for Bechtel HLW Canister Welding System* and 24590-CM-POA-HCHH-00004-03-00005 *Maintenance Manual for Bechtel HLW Canister Welding System.* The automated software controlling the welding processes is documented in 24590-CM-POA-HCHH-00004-03-00004 *Software Documentation for Bechtel HLW Canister Welding System.*

An argon/helium shield gas is used to prevent atmospheric contamination of the weld. The shield gas is supplied from bottle stations and is piped to the welder control panels; from the panels the gas is piped through a wall joggle to the welder. The bottle stations (24590-HLW-MHAN-HPH-MHAN-00004 and 24590-HLW-MHAN-HPH-MHAN-00035) are located on the south side of corridor HC0209. A compressed air supply is also piped to each welder to provide cooling for a camera (PTJ-XT-3119 and PTJ-XT-3120) that is used to monitor the weld process when filler wire is used. These cameras would not normally be installed, except when filler wire weld process is to be used. Both the shield gas lines and compressed air lines are fitted with non-return valves to prevent back-flow.

The welding machines are designed to be maintained remotely using the weld station MSMs. The weld machine is assembled using MSM compatible fasteners in a modular fashion allowing the drive motors, arc voltage control assembly, torch assembly, wire feed assembly, camera assembly and proximity switches to be replaced in-cave using the MSMs. The wire feed mechanism will only be used if the autogenous weld cap fails visual inspection; this is a not a normal event.

Cabling and gas supplies are terminated onto the welder with MSM compatible quick release couplings located on top of the welder for ease of access. If the welder cannot be remotely repaired it can be removed from the cave as a unit by disconnecting the cabling and gas supplies and disconnecting the welder and actuator as a unit from the weld carriage. The welder alignment clamp is MSM operable so that welder can be released from the canister should failure occur during the welding process. Regular maintenance is limited to changing the torch block electrode; the electrode should be replaced every ten welds (vendor recommendation) to maintain weld integrity. The torch block electrode is replaced remotely using MSMs. Remote removal of the assemblies, periodic maintenance and calibration requirements are documented in 24590-CM-POA-HCHH-00004-03-00005 *Maintenance Manual for Bechtel HLW Canister Welding System.* A DVD demonstrating remote maintenance was submitted by the weld machine vendor.

Selection of components is fully described in 24590-CM-POA-HCHH-00004-08-00001 *HLW Canister Welder Design Report.* The report documents how each specification requirement was met.

The welding machines are designated as WAI equipment, having both WAI passive and WAI performance attributes. A number of WAI demonstration tests have to be completed to confirm that the welder functions as required. These include determination of the welding parameters for each weld process, demonstration of the primary and secondary lid welding processes and weld inspection. The full scope of WAI requirements applicable to the welding machines are documented on waste acceptance impacting screening form 24590-HLW-WSF-ENG-09-002.

Engineering Specification 24590-WTP-3PS-MV00-T0004 contains the technical requirements for welder.

4.1.1.1.11 Camera Bracket Assembly

The camera bracket assembly (24590-HLW-MH-HPH-MHAN-00012 and 00034) supports the cameras used for confirming that no foreign objects have fallen into the canister prior to fitting the lid, and for visually inspecting the canister lid weld for surface defects. The camera can be removed from the bracket using the weld station MSMs.

Figure 4-14 Camera Bracket Assembly

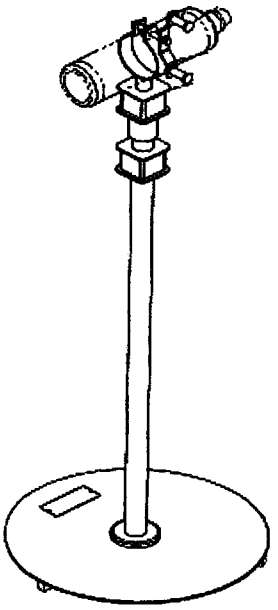

4.1.1.1.12 Canister Lid Lifter

The Canister Lid Lifter (24590-HLW-HC-HPH-LID-00002 and 00005) is an eductor-type vacuum suction cup mechanism used to lift a canister lid. The lid lifters have an MSM compatible quick disconnect coupling that is connected to a compressed air line fed through-wall at the weld station. The weld station MSMs are used manipulate the lid lifter.

Figure 4-15 Lid Lifter

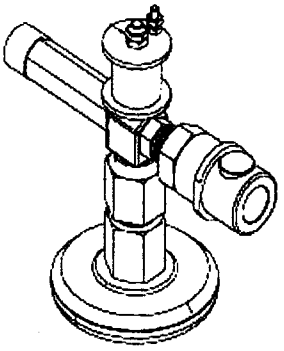

4.1.1.1.13 Primary Lid Magazine

The primary lid magazines (245090-HLW-HC-HPH-LID-00004 and 00006) are used to store primary lids in-cave. The primary lid magazine is fitted with an air purge to prevent dust and other airborne debris collecting on the lid surface to maintain the cleanliness of the lid prior to welding.

Figure 4-16 Primary Lid Magazine

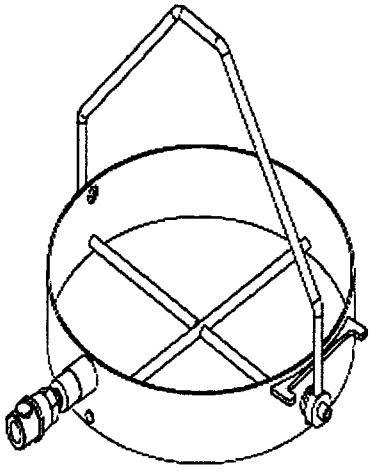

4.1.1.1.14 Canister Temperature Measuring Equipment

The canister temperature measuring equipment (24590-HLW-MH-HPH-MHAN-00023 and 00038) is used to measure the canister flange and surface temperature. The temperature of the canister flange must be below 350°F prior to the lid being welded. The canister temperature must be lower than 212°F prior to the canister being transported to the canister rinse vessel. This prevents flash-boiling of the water and stops the creation of steam from spreading possible contamination in the cave.

Figure 4-17 Exploded View of Resistance Temperature Detector

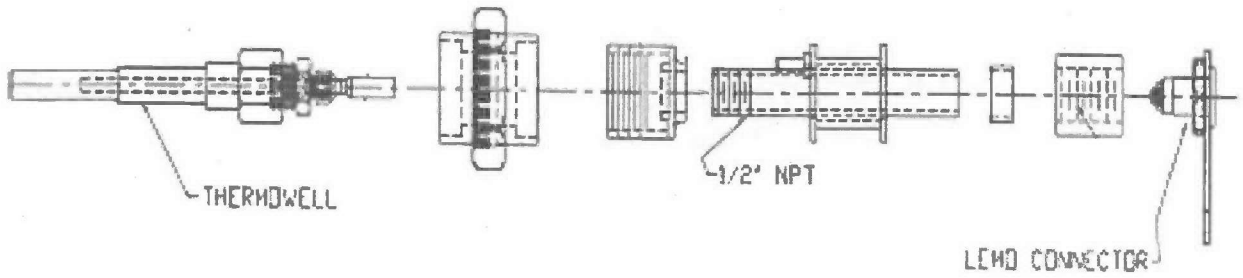

The canister temperature measuring equipment is a standard resistance temperature detector (RTD) that will be handled using the weld station MSMs. It can accommodate a temperature as high as 752°F (400°C). The RTD is wired directly to the MHJ with radiation tolerant cables and MSM-compatible quick disconnects.

4.1.1.1.15 Vacuum Unit

The vacuum unit (24590-HLW-MH-HPH-MHAN-00009), Figure 4-18, is a modified, standard, industrial shop vacuum, which is used for general housekeeping and clean-up at the weld station. [3.4.1.6]

The vacuum is generated with an air eductor located in the generator head. Compressed air enters through the inlet, and travels through a nozzle where it is converted to a high velocity stream. This stream decreases the air pressure in the suction chamber and creates the vacuum. The vacuum generator head has an in-line HEPA filter to prevent the spread of contamination.

The vacuum generator head is reused; however, the drum and internal filter are disposed of and replaced remotely using MSMs. The vacuum generating head is removed and a disposal lid is fitted onto the top of the drum; the lid is imported into the cave at the time of disposal. The lidded drum is then placed in the waste bin located at the weld station. A new drum is brought in the cave using one of the process cranes.

Figure 4-18 Vacuum Unit

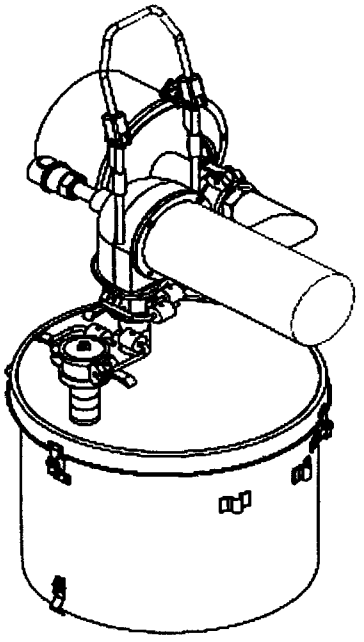

Engineering Specifications 24590-HLW-3PS-NW00-T0001 contain the technical requirements for the vacuum unit.

4.1.1.1.16 Glass Removal Tool

A pneumatic needle de-scaler (24590-HLW-FH-HPH-TOOL-00005) that is manually operated with an MSM will be used to remove glass from the canister external surface if required. The tool is classified as WAI (passive), the requirement being that the tool does not damage the canister surface beyond minor scratching. Refer to waste acceptance impacting screening form 24590-HLW-WSF-ENG-07-002. [3.9.1.3]

4.1.1.1.17 Flange Conditioning Tool

The flange conditioning tool (24590-HLW-FH-HPH-TOOL-00007) is a milling machine that will be used to machine a circular groove into the top of the canister flange to enable a secondary lid to be fitted onto the canister. The tool was procured as excess material from the West Valley Demonstration Plant.

The flange conditioning tool (FCT) is manually deployed using the canister handling cave process cranes. The FCT consists of the following components; turntable, drive, mill, mill indicator, electric motors, wire brush, a vacuum-sealed receptacle, and a control panel. The FCT is controlled from a local out-cave panel. The FCT and control panel will be installed on an as-needed basis.

The FCT utilizes the outside diameter of the canister flange as the physical location feature. The FCT is centered and clamped on the canister flange in such a way that it remains fixed during the milling operation. A chip vacuum is provided to collect chips when the end mill is cutting. To prevent free liquids from entering the canister, the FCT does not use cutting fluids.

The milling tool has the capability to be located at any position along the circumference. It has remote adjustable cutting depths and remote adjustable mill radial positions with positional indicators that are visible from the operators shield window and by CCTV cameras.

The FCT has been designated a WAI (passive) piece of equipment. Use of the FCT is designated a WAI activity. Demonstration testing of the FCT to confirm it operates correctly is designated as WAI testing. Refer to waste acceptance impacting screening form 24590-HLW-WSF-ENG-09-002. [3.9.1.4]

4.1.1.1.18 Glovebox and Posting Port

The glovebox and posting port (24590-HLW-M0-HPH-GB-00001 and 24590-HLW-DD-HPH-TWDVC-00009), Figure 4-19, act as assembly to provide a safe method of controlling contamination when introducing small tools and materials into the canister handling cave, or when measuring the radioactivity on a swab. [ALARA, 3.8.1.3]

The posting port is a transfer drawer that slides horizontally within a through-wall penetration and transfers items into the cave. The glovebox and posting port are located between the two weld stations to allow both sets of MSMs to reach the posted items. To facilitate maintenance, the drive motor for the tray assembly is located in the glovebox. To support decontamination the glovebox and posting port are fabricated from stainless steel.

The posting port out-cave shield door is interlocked with gamma monitors (RS-3701 and RS-3801) located in the through-wall portion of the posting port that prevent the out-cave door opening if a high radiation source is detected by the gamma monitors; this interlock is Safety Significant. The in-cave and out-cave shield doors are interlocked to prevent both doors being open simultaneously; this interlock is Safety Significant. [ALARA, 3.12.2.1.1]

The glovebox has inner and outer air lock doors for tool and swab import, a bag-out port for export, and is vented to the filter cave to ensure air flow direction is into the C5/R5 filter cave. The ventilation path is provided by a stainless steel pipe connected between the bottom of the glovebox and a joggle pipe penetrating the filter cave wall. The pipe also provides a drainage path into the filter cave should the glovebox internal fire suppression system activate. To promote contamination control, the inner and outer airlock doors are interlocked (non-safety) to prevent both doors being open simultaneously, and the inner air lock door is also interlocked (non-safety) to the posting port out-cave shield door. [ALARA, 3.12.1.1]

To support containment, the air flow velocity of 100-150 fpm is required in the event that a glovebox breach occurs. Breach is defined as the loss of one glove from the glovebox leaving an open 8" diameter glove port. [ALARA, 3.8.1.1]

To facilitate maintenance, the drives and closure mechanisms for the in-cave shield door are located in the through wall portion of the posting port, those for the out-cave shield doors are located out cave.

The posting port and glovebox are controlled by a vendor supplied control system, panel HPH-PNL-00011. They are not controlled by the MHJ.

Figure 4-19 Glovebox and Posting Port Assembly

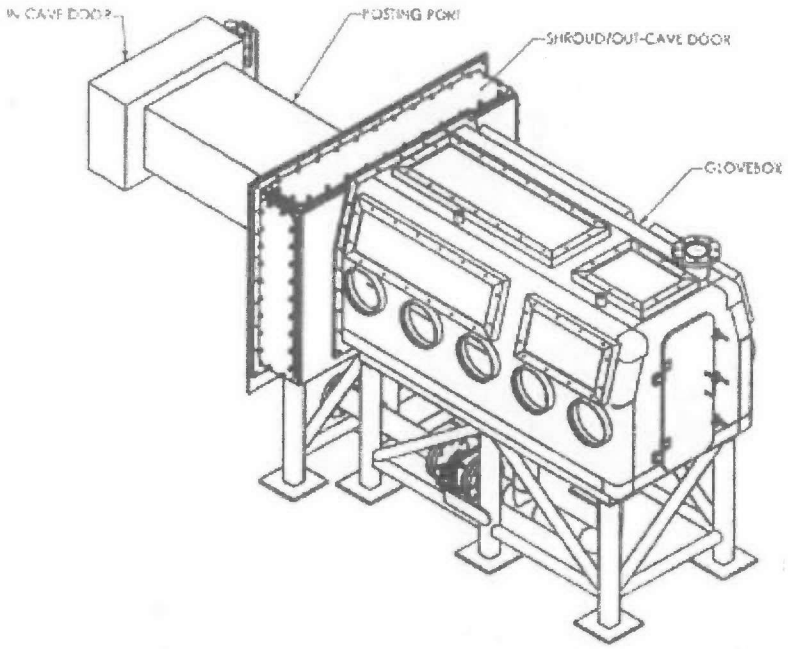

Engineering Specifications 24590-WTP-3PS-M000-T0006 and 24590-WTP-3PS-M000-T0007 contain the technical requirements for the posting port and glovebox.

4.1.1.2 Canister Handling Cave Decontamination & Maintenance Area Equipment

4.1.1.2.1 Crane Decontamination Area & Maintenance Area Shield Doors

Shield doors (24590-HLW-AD-HPH-DOOR-00001 and 00004) located between the canister handling cave and the crane decontamination area allow the process cranes to travel between the two areas. The doors provide a shielding function and assist in contamination control in order to protect personnel from exposure to the C5/R5 environment of the canister handling cave. The shielding function is designated as Safety Significant (SS). The shield doors aid contamination control by regulating the airflow from areas of lower contamination potential into areas of higher contamination potential. Air flow is controlled around the doors by adjustable air gap plates; these will be tuned to provide the required airflow for HVAC requirements. The shield doors are designated as seismic category II, which requires the doors to remain in place during and after a seismic event. The shield door arrangement is shown in Figure 4-20. [3.4.2.1, 3.11.1.1, 3.11.1.5]

The shield doors are designed to have a nominal plant life of 40 years to minimize worker exposure by reducing maintenance and replacement activities. Where consumable or commercially available components (e.g. bearings, seals etc.) do not have a design life of 40 years, those items are designed to be easily replaceable. [3.4.1.4]

The vertical door is raised and lowered on a pair of roller screws, driven by a single reversible electric motor. The motor is located in a personnel accessible area outside of the maintenance and decontamination areas (see Figure 4-21). The door raising and lowering operations are failsafe; a brake assembly being attached to each roller screw

engages when power is lost to the drive system. The door is guided by vertically orientated rails located in the crane maintenance and crane decontamination areas. The bottom edge of the vertical door provides guidance and lateral support to the horizontal shield door, this requires the vertical door to be in the lowered 'closed' position prior to the horizontal door being opened or closed. [3.11.1.1]

The horizontal door is supported and guided by a rail located at the base of the door, and is also guided and provided with lateral support by the bottom edge of the vertical door. Drive is provided by a roller screw, driven by a single reversible electric motor located in the decontamination area, which is a personnel accessible area.

The doors are MHJ controlled via local operator panels HPH-PNL-00009/00013/00008. An MHJ interlock inhibits movement of the horizontal door unless the vertical door is in the closed position.

Figure 4-20 Crane Decontamination and Crane Maintenance Shield Doors

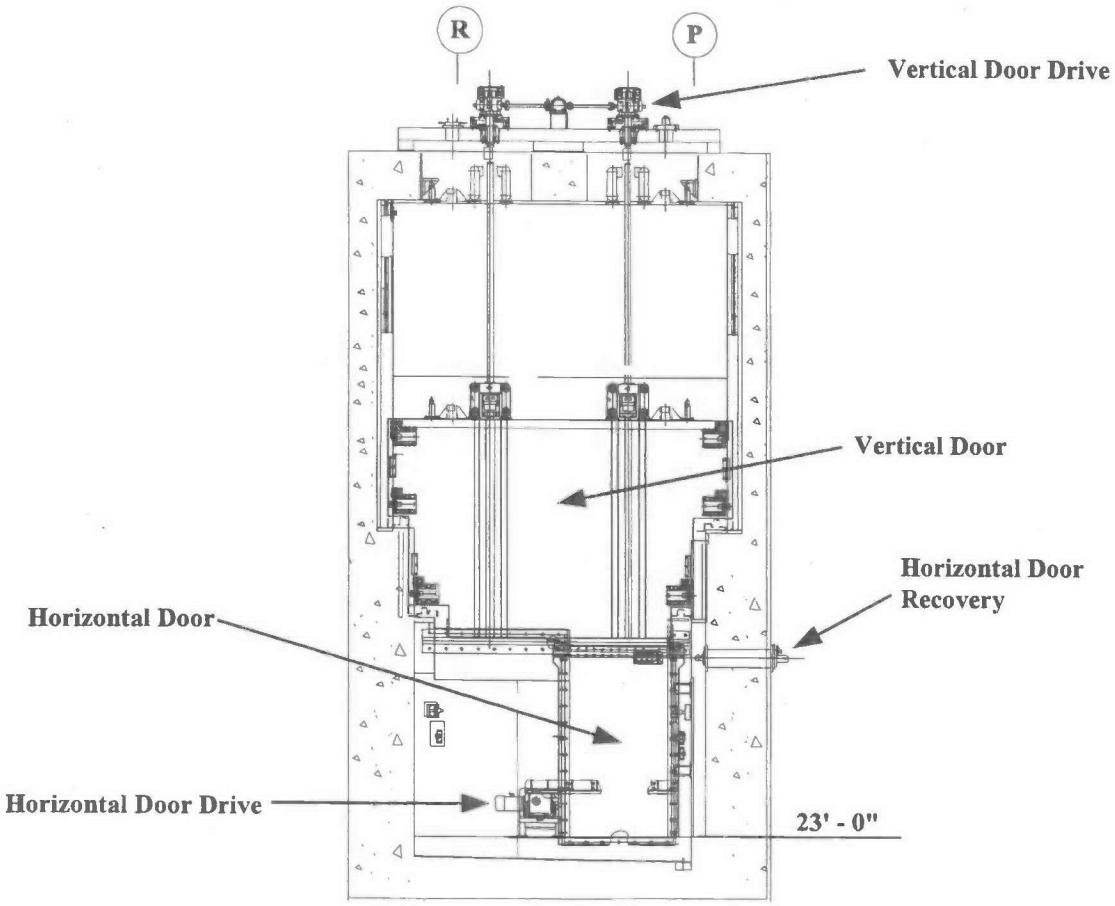

The horizontal shield door, crane maintenance (24590-HLW-AD-HPH-DOOR-00005) and vertical shield door, crane maintenance (24590-HLW-AD-HPH-DOOR-00008) are located between the crane maintenance and crane decontamination areas allow the process cranes to travel between the two areas. The design, safety functions and control of the maintenance area doors is similar to that of the decontamination area doors.

Engineering Specification 24590-WTP-3PS-ADDH-T0006 contains the technical requirements for the shield doors.

4.1.1.2.2 Maintenance Area Crane

The canister handling maintenance crane (24590-HLW-MJ-HPH-CRN-00009) is located in the crane maintenance area H-0329A (see Figure 4-21). The crane is used to provide maintenance services for the main process cranes. The crane is rated at 7.5 tons and is controlled using a hand-held radio control system. The crane does not interface with the MHJ. Platforms are provided to allow access to the crane for maintenance purposes, for example checking lubricant levels in gearboxes. Trolley and bridge wheels are permanently lubricated and sealed-for-life components. The crane design includes sight glasses, grease nipples and air vent holes for other components that require lubrication at regular intervals. [3.4.1.4, 3.5.4.4]

Figure 4-21 Crane Maintenance Area Layout

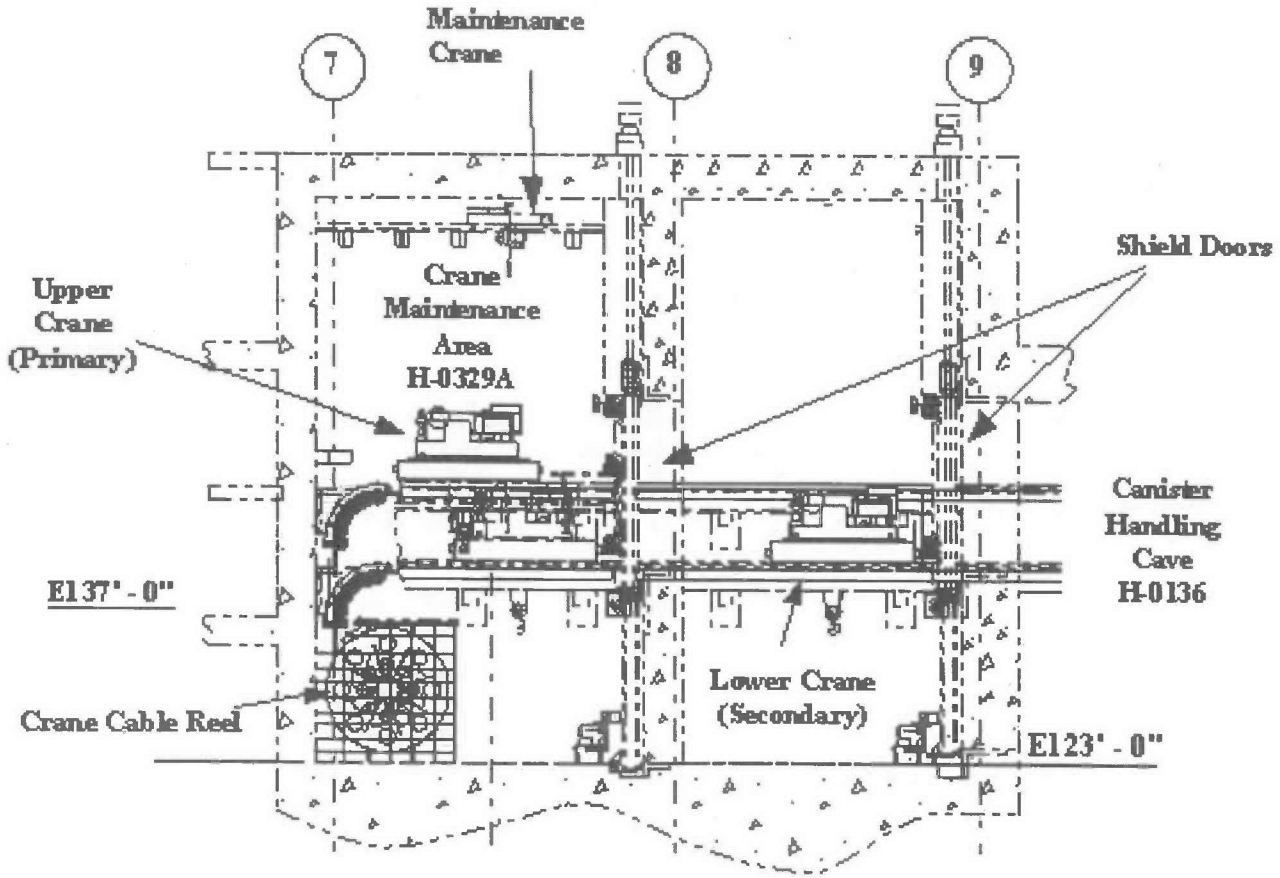

4.1.1.2.3 Maintenance Area Shielded Personnel Access Door

Access to the crane maintenance area is through a shielded personnel access door (24590-HLW-AD-HPH-DOOR-00007) located at elevation +37 ft. The shield door provides a shielding function to protect personnel

from exposure to the R3/R4/R5 crane decontamination area when the crane maintenance area shield doors are open. The door is located on the C5/R5 boundary and is designated as Safety Class and seismic category I. [ALARA, 3.11.1.2, 3.11.1.6]

4.1.1.2.4 Crane Decontamination Area Equipment

Equipment provided in the crane decontamination area includes MSMs, and a shield window. These items will be used for placing a glass shard sample bottle into a shielded transport flask. A spray lance (24590-HLW-FH-HPH-TOOL-00015) is provided to allow remote decontamination of equipment if necessary; however, where possible the preferred decontamination approach is "hands-on". [3.4.2.2]

4.1.1.3 Pour Tunnel Equipment

4.1.1.3.1 Pour Tunnel Bogies

Process operations inside the pour tunnels are performed by bogies (24590-HLW-MQ-HPH-TRLY-00001, 00004, 00010 and 00011) that are used to transport canisters to the glass pour position at the north end of the pour tunnel. Each pour tunnel has two bogies (one for each pour spout) that operate independently. The canisters are carried inside an open framed canister sleeve (24590-HLW-MQ-HPH-TRLY-00006, 00007, 00012 and 00013) that is removable from the main bogie frame using the canister handling cave process cranes. The bogie and sleeve are depicted in Figure 4-22.

Figure 4-22 Pour Tunnel Bogie and Sleeve

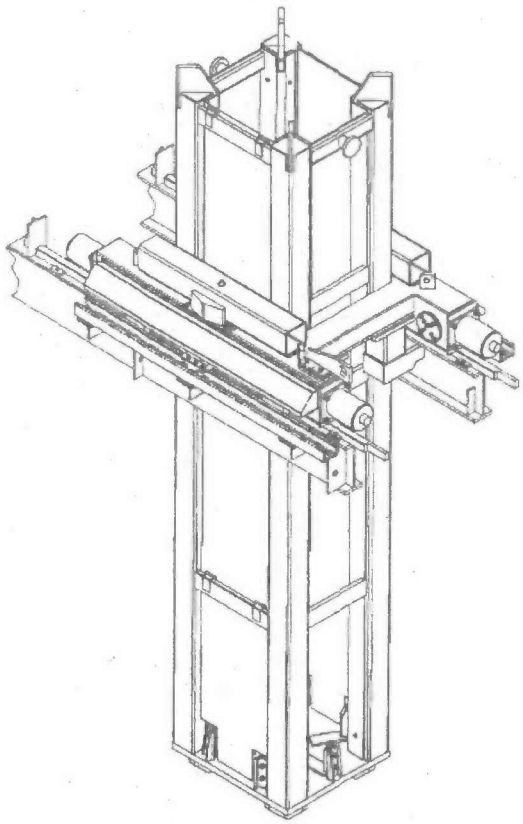

Each stainless steel bogie is powered by 2 push/pull chains that are paid out from cartridges located inside the bogie maintenance area. The chain drive motors are also located in the bogie maintenance areas. For redundancy purposes, each bogie is equipped with 2 chains, however, only 1 is required to move a bogie loaded with a glass filled canister. The chains run in guides along the side of the bogie rails. The guides are fitted with covers to reduce contamination build-up on the chains. The bogie rails are fabricated from stainless steel and rail end stops are provided to limit bogie travel, the wheel assemblies are modular self-lubricating components. Buffers are attached to the bogie to absorb the impact load and prevent damage to the bogie, the shield door, and rail stops.

Bogie maintenance and inspection activities will be carried out in the bogie maintenance areas. The canister sleeve must be removed from the bogie in order to allow the bogie to pass through the bogie maintenance area shield door aperture. The sleeve will be removed from the bogie using the canister handling cave process cranes and will be stored on a rack fixed to the north wall of the canister handling cave. A lift beam (24590-HLW-MJ-HPH-LIFT-00001) is provided to handle the canister sleeve. The general arrangement of equipment in the maintenance area is depicted in Figure 4-23. Prior to being transferred into the maintenance area the stainless steel bogie will be decontaminated at the pour tunnel decontamination station. The decontamination process will not impact any electrical or control components since there are no control or electrical components mounted on the bogie. [1.1.1.1]

The bogie can be pulled back into the bogie maintenance area using a manual hand-wind mechanism that interfaces with the drive mechanism inside the bogie maintenance area. [3.6.1.1]

Figure 4-23 Pour Tunnel Bogie and Drive

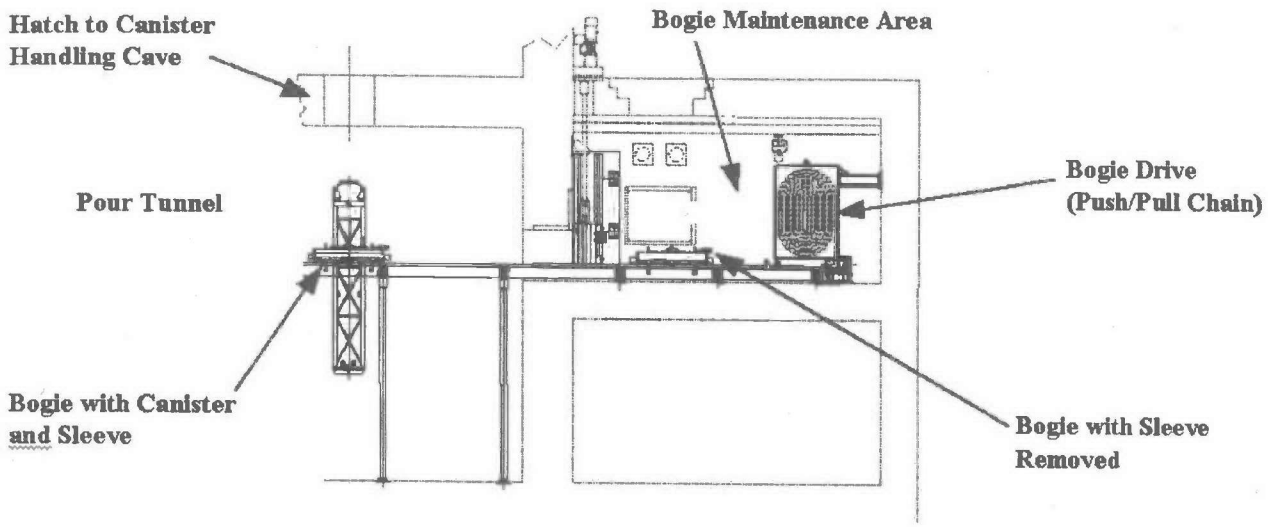

Control of the bogies is administered from MHJ local operator panels HPH-PNL-00009/00013/00008. Encoders on the chain drive motors are used to accurately position the bogie to within ± 1/8 inch below the pour tunnel hatches and at the glass pour location. The canister is required to be located to within ± 1.125 inch of the pour spout centerline; the additional tolerance on the canister location is needed to account for loading clearances between the canister and bogie sleeve. At the glass pour location a through wall proximity switch signals that the bogie is located at the pour position, and allows the operator (via the MHJ) to extend a through wall locking bolt that engages with the bogie chassis. An MHJ interlock prevents the locking bolt being disengaged from the bogie unless the melter air-lift is "off" and glass pour has been completed.

To maintain the canister handling cave concrete and the canister racks within allowable temperature limits, glass filled canisters are required to cool in the pour tunnel before being transferred to the canister handling cave. A Safety Significant interlock prevents the bogie being moved beyond its cooling position that is 6' south of the glass pour position until the required cooling period has expired. The cooling period is anticipated to be 8 hours; this 8 hour period is in addition to the 1 hour period the canister spends below the pour spout on completion of a glass fill. This will be finalized once the interlock design has been completed. This 9 hour total and the cooling location 6' south of the pour position were used as an input to calculation 24590-HLW-M8C-C5V-00006 that confirmed that the canister handling cave concrete would not exceed its temperature limits.

The bogie sleeve supports a filled canister weighing up to 9260 lbs and accurately positions the canister to prevent misalignment with the melter pour spout. The sleeve has an open design on its southern side to allow monitoring of the glass fill height by the HMP system glass fill-level infrared cameras located in the wall of the pour tunnels adjacent to the shield windows. The HMP system also includes a through-wall collimated gamma monitor that is used to detect a high canister glass level. The design elevation of the gamma monitor is +1 ft 9.5 in.; this equates to a glass level approximately 2.25 ft. below the top surface of the canister flange.

The bogie is designed to have a nominal plant life of 40 years to minimize worker exposure by reducing maintenance and replacement activities. Where consumable or commercially available components (e.g. bearings, seals etc.) do not have a design life of 40 years, those items are designed to be easily replaceable. [3.4.1.4]

Engineering Specification 24590-WTP-3PS-MQR0-T0002 contains the technical requirements for the bogies.

4.1.1.3.2 Bogie Decontamination Equipment

Each pour tunnel contains a bogie decontamination station equipped with a shield window, MSM's, through-wall services penetrations, through-wall lights, and a decontamination spray lance (24590-HLW-FH-HPH-TOOL-00010 and 24590-HLW-FH-HPH-TOOL-00029). The lance is suitable for use with high pressure water, steam, detergent solution, CO_2, and compressed air. Services are piped into the pour tunnel through joggled pipe that is part of a 10.5" liner service plug. To prevent back-flow and minimize leakage, a check valve and a Staubli shut-off connector socket are fitted on the out-cave side of the joggle pipe. The canister sleeve will be removed from the bogie prior to decontamination. Waste liquid will be collected by sumps located in the floors of the pour tunnels and piped to the radioactive liquid disposal system. [3.4.4.2]

4.1.1.4 Pour Tunnel Maintenance Area Equipment

4.1.1.4.1 Bogie Maintenance area Shield Doors

Shield doors (24590-HLW-AD-HPH-DOOR-00002 and 00003) located between the pour tunnels and the pour tunnel maintenance areas allow the bogies to travel between the two areas. The doors provide a shielding function and assist in contamination control in order to protect personnel from exposure to the C5/R5 environment of the pour tunnel. The shielding function is designated as Safety Significant. The shield doors aid contamination control by regulating the airflow from areas of lower contamination potential into areas of higher contamination potential. Air flow is controlled around the doors by adjustable air gap plates; these will be tuned to provide the required airflow for HVAC requirements. The door drive motors are located in a C2/R2 area. The shield doors are designated as seismic category II, which requires the doors to remain in place during and after a seismic event. The shield door arrangement is shown in Figure 4-24. [3.11.1.6]

Figure 4-24 Bogie Maintenance Shield Doors

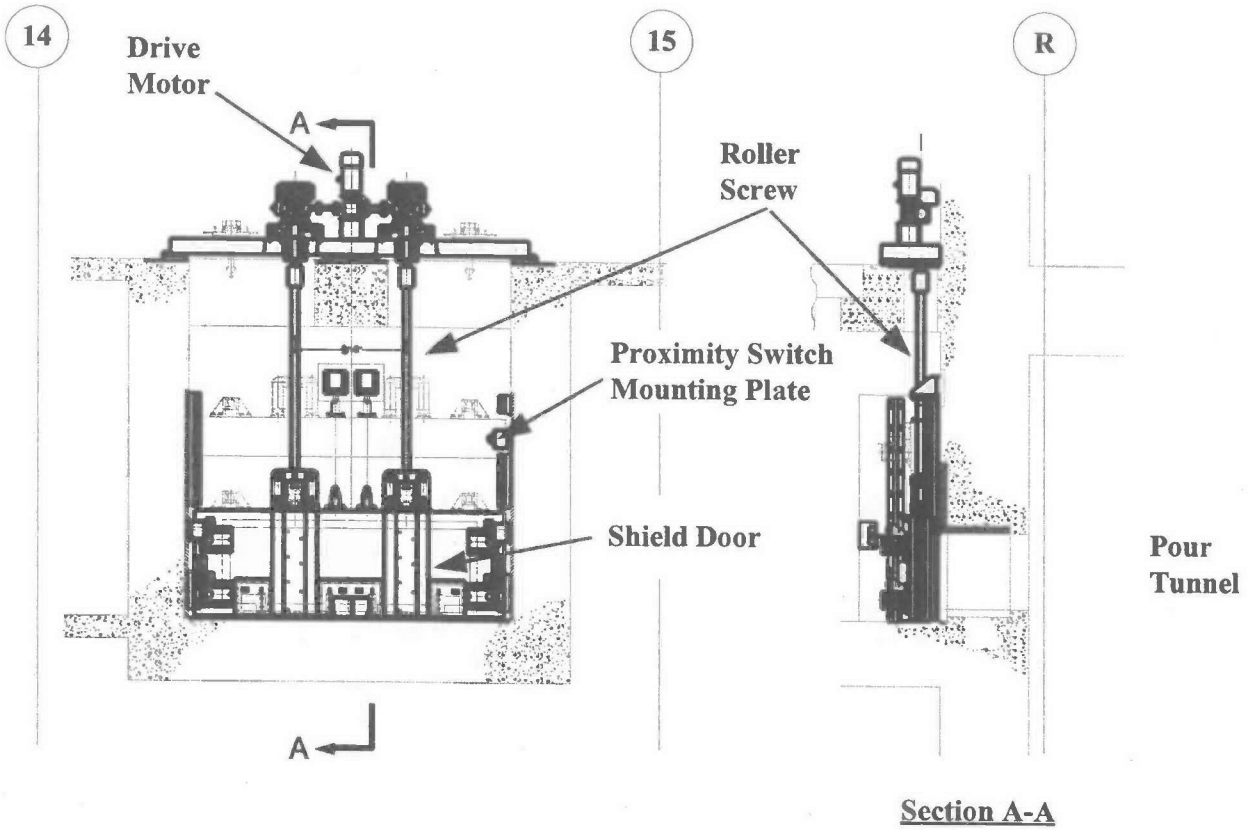

Section A-A

The vertical doors are raised and lowered on a pair of roller screws, driven by a single reversible electric motor located in a personnel accessible area. The door raising and lowering operations are failsafe; a brake assembly attached to each roller screw engages when power is lost to the drive system. The door is guided by vertically orientated rails located in the maintenance area. The doors are MHJ controlled via local operator panels HPH-PNL-00009/00013/00008. [3.11.2.1]

Engineering Specification 24590-WTP-3PS-ADDH-T0001 contains the technical requirements for the shield doors.

4.1.1.4.2 Maintenance Cranes

The 3 ton capacity pour tunnel maintenance cranes (24590-HLW-MJ-HPH-CRN-00012 and 24590-HLW-MJ-HPH-CRN-00013) are located in the bogie maintenance areas (see Figure 4-25). The cranes will be used for general maintenance activities on the bogies, and to locate the bogies and drive chain cartridges below the access plug should the bogies have to be removed from the maintenance area. The cranes are pendant controlled; they do not interface with the MHJ. [3.5.4.6]

Figure 4-25 Bogie Maintenance Area

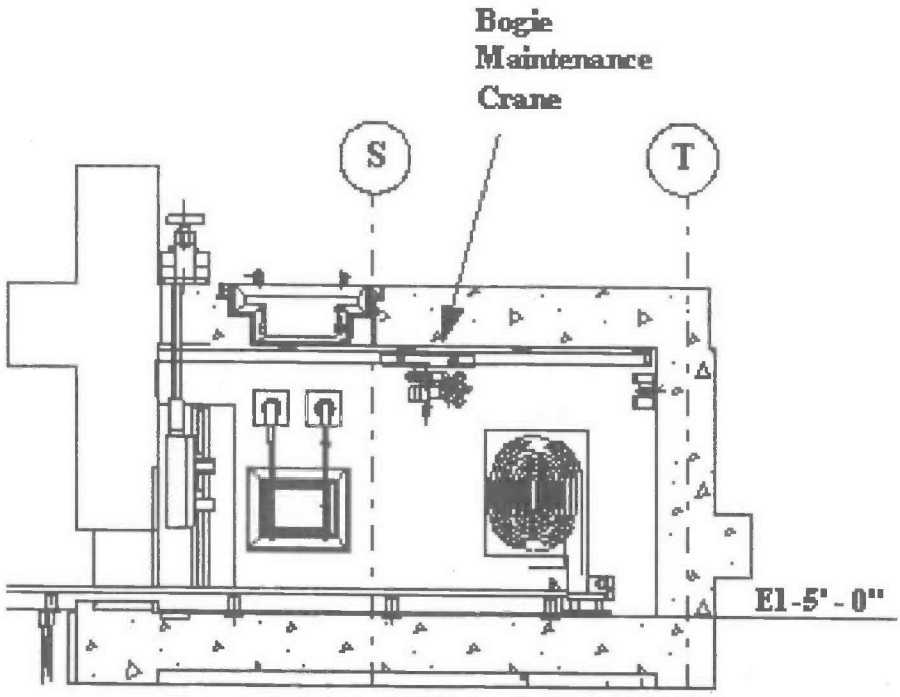

4.1.1.4.3 Shielded Personnel Access Doors

Access to the bogie maintenance areas is through shielded personnel access doors (24590-HLW-AD-HPH-DOOR-00006 and 00009) located at elevation +5 ft. The shield doors provide a shielding function to protect personnel from exposure to the R5 pour tunnels when the bogie maintenance area shield doors are open. The door is located on the C5 boundary and is designated as Safety Class and seismic category I. [3.11.1.2]

4.1.1.5 Export of Solid Waste

Solid waste generated in the canister handling cave is exported via the pour tunnels to the HSH system, from where it is transferred to the RWH system.

Solid waste will typically consist of welding electrodes, swabs, and any other replacement parts that will fit inside a solid waste basket (see Figure 4-26).

Figure 4-26 Solid Waste Basket

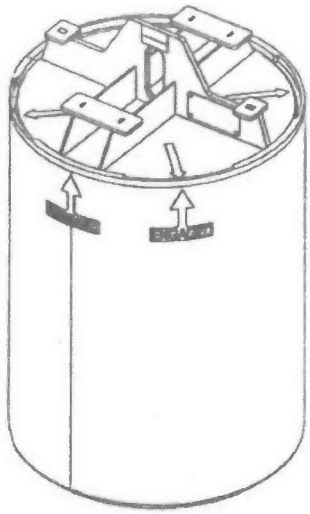

The waste basket is a consumable item that is approximately 19" in diameter, 32" tall and is designed to carry a maximum load of 1000 lbs. The lid has four tabs around its diameter that locate into cut-outs in the top of the basket. The lid is placed on (or removed from) the basket body using an MSM. The lid incorporates a lifting bail so that it may be handled remotely by the canister handling cave cranes in combination with a hook adapter.

Once the waste basket has been lidded, it will be loaded into the waste basket transfer container (24590-HLW-MH-HPH-MHAN-00045). This operation will take place inside the canister handling cave. The waste basket transfer container will then be placed onto the pour tunnel bogie sleeve (see Figure 4-27) using one of the process cranes. The waste container lifting bail is fitted on a pivot so that it may be rotated to allow the waste basket to be lifted out of the container. MSMs will be used to rotate the lifting bail.

Figure 4-27 Waste Basket & Transfer Container Loaded onto Bogie Sleeve

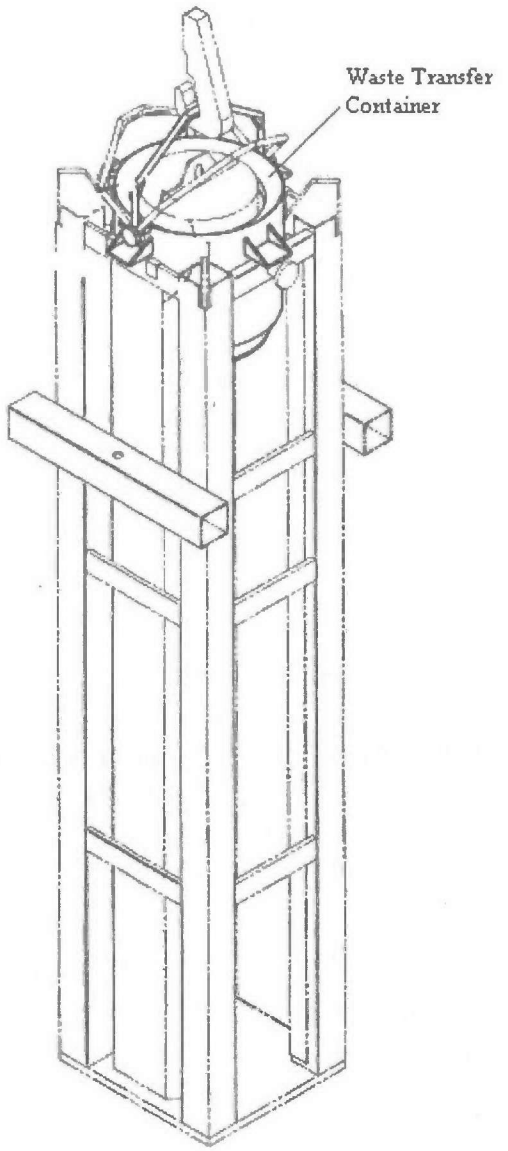

The pour tunnel bogie will then be located in front of the pour tunnel MSMs and the waste container lifting bail positioned to allow removal of the waste basket. The bogie will then be moved to the north end of the tunnel and located in the canister cooling position. The pour tunnel cover will then be removed by the HSH system crane, and the waste basket will be lifted into the melter cave. Due to melter cave jumper configuration, only the west bogie in each pour tunnel maybe used to transfer solid waste to the HSH system. Lidded waste baskets will be stored in the canister handling cave until the HSH system is ready to receive them. The pour tunnel MSMs will be used to place the container lifting bail in the upright position to allow engagement with the crane hook. [3.4.1.6]

4.1.2 Boundaries and Interfaces

This section contains a listing of all interfacing systems by the system number and identifies the nature of the interface.

Table 4-1 Interfacing Systems

Interfacing System	Interface Description
HLW Canister Receipt Handling System (HRH)	HPH system receives empty canisters from the HRH system.
HLW Canister Decontamination Handling System (HDH)	HPH system transfers glass filled lidded canisters to the HDH system.
HLW Melter Cave Support Handling System (HSH)	HPH system transfers solid waste to the HSH system.
HLW Melter Process System (HMP)	HMP system pour spout proximity switch used to detect canister located at pour position
Mechanical Handling Control System (MHJ)	Provides control of system HPH equipment
Process and Mechanical Handling CCTV System (PTJ)	CCTV system cameras used for viewing in-cave operations
Process Control System (PCJ)	PCJ system provide the interlock that inhibits the melter airlift if a canister is not located below the pour spout
Programmable Protection System (PPJ)	PPJ system provides the safety interlock for the pour tunnel bogie cooling position
Instrument Service Air System (ISA)	Provides cooling air for weld machine cameras; provides air to operate weld station vacuum cleaner, glass shard sampling equipment and canister lid lifter; provides air for decontaminating pour tunnel bogies.
HLW Demineralized Water System (DIW)	Provides water for decontaminating pour tunnel bogies
C5 Ventilation System & C3 Ventilation System (C5V & C3V)	Provides adequate airflow and negative pressure for contamination control
Radioactive Liquid Waste Disposal System (RLD)	RLD receives liquid washdown effluent from the HPH system

4.1.3 Physical Layout and Location

4.1.3.1 System HPH Layout and Overview

The HPH system equipment is located in the following 7 areas:

- Canister handling cave (room H-0136 C5/R5)
- Canister handling cave crane decontamination area (room H-0329 C3/C5/R3/R4/R5)
- Canister handling cave crane maintenance area (room H-0329A C3/R3)
- Pour tunnels 1 and 2 (rooms H-B032 and H-B005A C5/R5)
- Pour tunnels 1 and 2 bogie maintenance areas (rooms H-B044A and H-B050A C3/R3)

The above areas have contamination and radiation classifications based on anticipated contamination radiation levels. Glass filled open topped canisters will be handled in the pour tunnels and in the canister handling cave. Consequently high radiation doses and high contamination levels will be present in these areas, and equipment

such as cranes and bogies operating in these areas will become contaminated during operations. This contamination could be transferred to the decontamination and maintenance areas when the cranes and bogies withdrawn from the C5/R5 areas for maintenance purposes.

Refer to the system mechanical handling drawings 24590-HLW-M7-HPH-00001001 through 1007 and equipment location drawings 24590-HLW-P1-P23T-00009, 00010, 00014, 00015, 00119 and 000120; 24590-HLW-P1-P23T-00213 through 215; 24590-HLW-P1-P23T-00218 through 220 and general arrangement drawings 24590-HLW-P1-P01T-00001, 2 and 4 for the general layout and arrangement of the primary pieces of equipment.

Non-maintainable equipment such as crane rails, bogie rails, weld station table and canister storage racks have been designed following nationally recognized structural standards for a 40 year life. There are no planned maintenance activities associated with these items. [3.4.1.4]

The HPH system is required to support a production rate of up to 7.5 metric tons glass/day (MTG/day) (see document 24590-WTP-DB-ENG-01-001) which equates to a through put of 2.4 canisters per day based on 3.1 MTG/canister. To reach 7.5 MTG/day both melters must be running, and complete a glass pour in approximately 20 hours. Consequently, two canisters must be exported from the HPH system to the HDH system every 20 hours. The steps included in the 20 hour frame include removing the canister from the pour tunnèl, measuring glass fill height, taking a glass sample (as required), the canister flange cooling to below 350°F, welding the lid and transferring the canister to the buffer store rack where it will cool until the surface temperature falls below 212°F.

It should be noted that the design capacity of the current melters is required to be 6 MTG/day; the increased production of 7.5MTG/day will be achieved with replacement second generation melters.

4.1.3.2 Canister Handling Cave (H-0136)

The radiation dose rate at a distance of 12 inches from a glass filled canister could be as high as 584 R/hr depending on the waste type (see calculation 24590-HLW-Z0C-30-00011). Consequently, to comply with ALARA requirements, all canister process operations taking place in the HPH system are performed remotely in order to protect personnel from the high radiation fields inside the C5/R5 canister handling cave. All handling operations in the canister handling cave are controlled remotely via MHJ local operator interface (LOI) panels.

The HLW canister is fabricated from stainless steel and is approximately 14' 7" tall with an external diameter of 24", and when filled with immobilized high level waste will weigh approximately 9000 lbs. The canister lid is welded to the body. An empty canister weighs approximately 1500 lbs. The canister is depicted in Figure 4-28. In order to meet repository requirements, the maximum glass filled canister weight is 9260 lbs.

Figure 4-28 HLW Canister

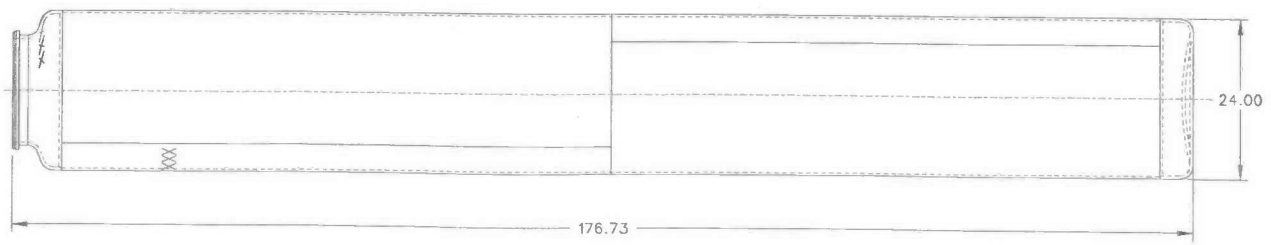

Empty canisters are imported into the C5/R5 canister handling cave from the C3/R3 canister import tunnel (part of the HRH system), and are then transferred to the canister buffer rack, or they may be directly loaded into a pour tunnel bogie. The bogie then moves to the north end of the pour tunnel locating the empty canister below the melter pour spout. On completion of the glass fill and after cooling for a pre-determined period in the pour tunnel, the glass filled canister is removed from the pour tunnel bogie and transferred to the canister storage rack. The canister is then transferred to the welding station where the glass fill height is measured and, if required, a glass sample will be collected. The lid will then be welded onto the canister and, after confirmation of weld integrity, the glass filled canister will be transferred to the C3/C5/R3/R5 canister rinse tunnel, H-B039B (part of the HDH system). To prevent steam flash occurring in the canister rinse vessel (part of the HDH system), the surface temperature of the canister must be below 212°F before it is transferred to the rinse vessel.

Shielded equipment access hatches inside the canister handling cave form the physical boundaries between the HPH and HRH, and HPH and HDH systems. Contamination control is maintained by cascading air from areas of low contamination potential to areas of higher contamination potential via engineered air gaps incorporated into the hatch designs.

Inside the canister handling cave the primary canister processing operations take place at one of two duplicate welding stations located along the south wall of the cave. Each weld station is equipped with a canister lid welder mounted on movable weld station carriage, cameras for weld inspection, and equipment used to measure glass fill height, collect glass samples and place lids onto the HLW canister. To support welding operations each weld station is also equipped with a pair of MSM's, a shield window and through-wall joggle penetrations housing compressed gas lines, power and control cables for the various pieces of weld station equipment.

The canister handling cave equipment also includes two 6 ton over head cranes, canister grapples, canister storage racks, hatches to permit canister transfer to the pour tunnels and to systems HRH/HDH. A posting port is located adjacent to the weld table to allow canister lids, welding electrodes and small tools/equipment to be imported into the handling cave. The posting port and its associated glovebox, also support monitoring of swabs.

Solid waste generated in the HPH system will typically consist of welding electrodes, replacement switches and cables. The waste is placed in a disposal basket located at the weld station and transferred via the pour tunnels to the HSH system. From there the waste is transferred to the HLW Radioactive Solid Waste Handling (RWH) system.

Glass samples will be collected on an as required basis at the weld station. Glass shards will be placed into a 25 ml collection bottle that will then be transferred to the crane decontamination area and placed in a shielded flask. The flask will then be exported to the Analytical Laboratory where analysis of the glass sample will be completed. To prevent the flask becoming highly contaminated it is not taken into the canister handling cave.

Gas supplies for the welder are supplied from an out-cave gas bottle station located along the south wall of corridor HC0209 opposite the weld station shield windows. A process air manifold supplying compressed air to the weld station is also located on the same wall. Check valves fitted in the pipe work to prevent back flow from the canister handling cave.

The main walls of the canister handling cave have a partial epoxy finish, the floor and immediate areas surrounding the storage and buffer racks are clad in stainless steel. No finish coating is applied to metal deck ceiling.

Sumps are installed in the elevation −3 ft floor immediately below the storage and buffer racks. The sumps are part of the HLW Radioactive Liquid Waste Disposal system (RLD).

Closed circuit television cameras (CCTV) are located at the weld station to assist remote operations on the welder and are also fitted onto the two process cranes. Wall mounted lights are installed at various intervals along the north and south walls of the cave.

The canister handling cave is permitted (Dangerous Waste Permit) as a Containment Building and also as a secondary containment area for ancillary equipment (piping) located in this room.

4.1.3.3 Crane Decontamination and Crane Maintenance Areas (H-0329 & H-0329A)

The crane decontamination (C3/C5/R3/R4/R5) area and crane maintenance (C3/R3) area are located at the western end of the canister handling cave. The crane maintenance area contains platforms to facilitate inspection and servicing of the process cranes and the maintenance crane.

To comply with ALARA, shield doors are located between the canister handling cave and crane decontamination area, and between the crane decontamination and maintenance areas. To promote contamination control, ventilation air is cascaded via door engineered air gaps from the maintenance area to the decontamination area, and from the decontamination area to the C5/R5 canister handling cave. [3.11.1.1, 3.11.1.2]

Equipment contained in the decontamination area includes a pair of MSMs, shield window, and a CCTV camera. Joggle plug penetrations located adjacent to the window allow services (for example, compressed air or water) to be piped into the decontamination area as required. The area has an epoxy finish on the floor, and a partial epoxy finish on the walls. A sump and associated pipe work, part of the RLD system, is installed in the south-east corner of the room. [3.4.2.2]

The decontamination area will be used for decontaminating equipment (if required) prior to in-cave items being transferred to the maintenance area. The decontamination area is also used for placing glass shard samples into a shielded transport flask that is then exported from system HPH via the crane maintenance area before being transferred to the Analytical Laboratory for analysis. To support ALARA, a through wall gamma monitor (RS-1001) will be used to confirm that radiation field is low enough to allow personnel entry into the area in order to torque the bolts fixing the lid onto the shielded transport cask. [ALARA, 3.10.1.1]

The crane maintenance area (CMA) houses a maintenance crane, crane maintenance platforms, crane cable reels that supply power and control signals to the two 6 ton over head system process cranes, a CCTV camera, and a continuous air monitor. An access plug is built into the floor of the CMA that allows large pieces of equipment to be imported /exported to/from the system. Personnel access into the area is via a shielded personnel access door (SPAD) located at elevation +37 ft. The area has an epoxy finish on the floor, and a partial epoxy finish on the walls.

4.1.3.4 Pour Tunnels (H-B032 & H-B005A)

The HPH system contains two identical C5/R5 pour tunnels running in the north-south direction below the canister handling cave. Canisters are transferred into the pour tunnels from the canister handling cave via hatches and lowered onto bogies that then travel northwards to locate the empty canisters below the melter glass pour spout. One pour tunnel, containing two bogies, is dedicated to each melter. The glass pour takes approximately 20 hours to complete, if both pour tunnels are operational this equates to a production rate of 7.5

MTG/day. On completion of the glass pour and having cooled for a pre-determined period in the pour tunnel, the filled canisters are transferred back to canister handling cave and placed in the canister storage rack to cool. All handling operations in the pour tunnel are controlled remotely via MHJ local operator interface panels.

Each pour tunnel has a bogie decontamination station consisting of a shield window, lights, master slave manipulators (MSM's), through-wall service penetrations and a decontamination lance. Decontamination will be performed prior to transferring a bogie into the bogie maintenance area.

Through wall cameras and lights are located to allow remote viewing of the glass pour location, and also to permit viewing of the canister/bogie loading interface.

Thermal imaging cameras (HMP-LE-0816, 0820, 2816 and 2820) are located adjacent to the pour tunnel shield windows. The cameras provide the operators with a visual indication of the glass level in the canister.

To maintain the required airflow rate from the pour tunnels into the melter caves, the removable panels that form the physical boundary between the areas are designed to provide a minimum opening of 5.3 ft^2. The panels are part of the HSH system.

The pour tunnels are permitted (Dangerous Waste Permit) as Containment Buildings. Pour tunnel 1 is also permitted as secondary containment for ancillary equipment (piping) located in this room. Compliance with the DWP requires the floor, walls and ceiling of the pour tunnels to be clad in stainless steel. The floor is sloped to direct any decontamination liquids to a sump that is part of the RLD system. Insulation is fitted below the cladding to protect the concrete from the high thermal loading inside the tunnels.

4.1.3.5 Pour Tunnel Bogie Maintenance Areas (H-B044A & H-B050A)

Bogie maintenance areas (BMA) are located at the south end of each pour tunnel and provide a dedicated maintenance area for the pour tunnel bogies. To comply with ALARA, shield doors are located between each BMA and the C5/R5 pour tunnels. To control the spread of contamination the doors are provided with engineered air gaps that allow ventilation air to be cascaded from the maintenance areas into the pour tunnels. [3.11.1.1]

The motive force for the bogies is supplied using a "push-pull" chains that are driven from the bogie maintenance area. The chains are wound and unwound from a cartridge in the BMA. For redundancy purposes, each bogie is fitted with two chains.

Each maintenance area contains shield windows, plugged 10.5" liners that may in the future be fitted with MSMs, joggled through-wall service penetrations, CCTV cameras, a continuous air monitor and a gamma area radiation monitor. A plug is located in the roof of the maintenance areas to allow removal of the bogie or "push-pull" chain cartridge should they have to be replaced. Each maintenance area is accessed through a SPAD. The area has an epoxy finish on the floor, and a partial epoxy finish on the walls.

4.1.4 Principles of Operation

There are no automated MHJ control sequences associated with the equipment in the HPH system. Each piece of MHJ controlled equipment, for example shield doors, cranes etc., is operated manually from the LOI with each machine movement being operator-initiated. The welding machines and posting port/glovebox are controlled by vendor supplied control systems; they are not MHJ controlled.

All of the process equipment that operates in the C5/R5 pour tunnels or canister handling cave is operated remotely from MHJ LOI panels or from vendor supplied control panels that are located in R2/C2 areas. The following provides a brief description of the major operational steps that the HPH system performs:

4.1.4.1 Canister Handling

The HPH system process begins with the receipt of a clean canister from the HRH system. The canister handling cave process crane and grapple are used to raise a clean canister through the open canister import tunnel hatch and transfer it to the buffer rack. The bogie will be transferred to the glass pour position. The glass pour process commences. The glass will be added to the canister in 12 or 13 batch pours. Based on a production rate of 7.5 MTG/day, the glass pour process will take approximately 20 hours. Once the canister has cooled, the transfer bogie is moved south and located below the pour tunnel hatch. The hatch is opened and the canister is raised into the canister handling cave and the hatch is closed. The filled canister is transferred to the canister cooling rack.

- Weld Station Operations

The cooled canister is transferred to one of the weld stations using one of the process cranes and canister grapple. As it is lowered into the weld station, the canister will be inspected using the shield window and CCTV cameras for glass deposits. Any glass detected on the canister exterior is removed by a pneumatic needle descaler that is used with the MSMs. The canister flange is measured to confirm its temperature is within the allowable range for welding. The next step is to visually inspect the inside of the canister to verify it is free of foreign debris using the welding station closed circuit television (CCTV) camera. The primary lid will be placed onto the canister using the lid lifter and weld station MSMs. The weld carriage is used to locate the welding machine onto the canister flange; the lid is welded to the body, and finally visually inspected using the weld station cameras. [3.9.1.1, 3.9.1.3]

4.1.4.2 Export of Solid Waste

The basket lid is fitted using the weld station MSMs. The basket will be loaded into the waste basket transfer container, and the container lowered through one of the pour tunnel hatches and placed on the bogie canister sleeve. Location and guide features on the transfer container are used to position the container on the canister sleeve. The pour tunnel bogie will be moved to the north end of the tunnel and located in the canister cooling position. The pour tunnel cover will be removed by the HSH system crane, and the waste basket will be lifted into the melter cave.

See Section 4.2 for additional detail regarding the HPH system operations.

4.1.5 System Reliability Features

TBD

4.1.6 System Control Features

4.1.6.1 Instrumentation and Controls

Except for the welding machines and the posting port and glovebox, the HPH system equipment is operated by the MHJ via LOI's HPH-PNL-00008, 00009 and 00013. There are a number of MHJ interlocks associated with the system; these are documented in 24590-HLW-M1-HPH-00001 *Mechanical Sequence Diagram (MSD) for HLW Vitrification System HPH Canister Pour Handling*.

The control systems for the welding machines and the posting port and glovebox are supplied by the vendor.

4.1.6.2 Remote Continuous Controls

Not applicable to the HPH system.

4.1.6.3 Remote Discrete Controls

Discrete controls applicable to the HPH system are identified in 24590-HLW-M1-HPH-00001 *Mechanical Sequence Diagram (MSD) for HLW Vitrification System HPH Canister Pour Handling.*

4.1.6.4 Trips and Interlocks

4.1.6.4.1 Safety Interlocks

Table 4-2 Safety Interlocks

Equipment No.	Instrument No.	Properties	Function	Remarks
HPH-TRLY-00001 Pour tunnel 1 bogie	TBD see note 1 below	SS	See note 1 below	None
HPH-TRLY-00004 Pour tunnel 1 bogie	TBD see note 1 below	SS	See note 1 below	None
HPH-TRLY00010 Pour tunnel 2 bogie	TBD see note 1 below	SS	See note 1 below	None
HPH-TRLY00011 Pour tunnel 2 bogie	TBD see note 1 below	SS	See note 1 below	None
HPH-TWDVC-00009 Posting port	RS-3701 OR RS-3801	SS	Prevents the posting out-cave shield from opening on detection of a high radiation source	None
HPH-TWDVC-00009 Posting port	ZS-3909 OR ZS-3910	SS	Prevents the out-cave shield door from opening unless the in-cave is locked in the closed position	None
HPH-TWDVC-00009 Posting port	ZS-3904 OR ZS-3905	SS	Prevents the in-cave shield door from opening unless the out-cave door is closed	None

Note 1: A Safety Significant interlock prevents the transfer of a poured canister between the pour tunnels and the canister handling cave unless the canister has had sufficient time to cool in the pour tunnel. The designated cooling position is 6' south of the glass pour position. The canister is to remain at this cooling location for 8 hours. This 8 hour time period is in addition to the 1 hour period the canister spends below the pour spout on completion of a glass fill. This interlock requirement is implemented by restricting the movement of the pour tunnel bogies immediately after completion of the glass pour. The interlock design is not yet finalized.

4.1.6.4.2 Non-Safety Interlocks

Non-safety interlocks for the HPH system are documented in 24590-HLW-M1-HPH-00001 *Mechanical Sequence Diagram (MSD) for HLW Vitrification System HPH Canister Pour Handling.* The MSD identifies the interlock requirements, applicable component tag numbers and applicable instrument numbers.

To avoid upsetting the C5V ventilation system flow rates and pressures, and to maintain containment cascade airflow directions, Non-safety interlocks prevent multiple shield doors and hatches from being open at the same time. [ALARA]

4.1.6.5 Packaged Equipment - Local Control Only

Local controls associated with the HPH system packaged equipment are identified in Table 4-3.

Table 4-3 Packaged Equipment Local Controls

Equipment No.	Instrument No.	Properties	Function	Remarks
HPH-WELD-00004 & HPH-WELD-00010	Refer to vendor operating manual 24590-CM-POA-HCHH-00004-12-00001	WAI	Refer to vendor operating manual 24590-CM-POA-HCHH-00004-12-00001	None
HPH-CRN-00013	Refer to vendor operating manual 24590-CM-POA-MJKG-00002-51-00008	N/A	Refer to vendor operating manual 24590-CM-POA-MJKG-00002-51-00008	None
HPH-CRN-00012	Refer to vendor operating manual 24590-CM-POA-MJKG-00002-51-01	N/A	Refer to vendor operating manual 24590-CM-POA-MJKG-00002-51-01	None
HPH-CRN-00009	Refer to vendor operating manual 24590-CM-POA-MJKG-00002-51-00011	N/A	Refer to vendor operating manual 24590-CM-POA-MJKG-00002-51-00011	None
HPH-GB-00001 & HPH-TWDVC-00009	Refer to vendor operating manual 24590-QL-POA-M000-00002-TBD	SS	Refer to vendor operating manual 24590-QL-POA-M000-00002-TBD	Vendor operating manual not yet issued

4.1.6.6 Complex Control Schemes

The vendor supplied control scheme for welding machines is described by the vendor manuals referenced in and by the software life cycle documents referenced in Section 5.2.

4.2 Operations

4.2.1 Initial Configuration (Pre-startup)

Reserved

4.2.2 System Startup

Reserved

4.2.3 Normal Operations

Reserved

4.2.4 Off-Normal Operations

Reserved

4.2.5 System Shutdown

Reserved

4.2.6 Safety Management Programs and Administrative Controls

Reserved

4.3 Testing and Maintenance

Reserved

4.3.1 Temporary Configurations

Reserved

4.3.2 TSR-Required Surveillances

Reserved

4.3.3 Non-TSR Inspections and Testing

Reserved

4.3.4 Maintenance

Reserved

4.4 Supplemental Information

Reserved

5 Sources, Bases, and Other References

5.1 Source / Basis References

Document Number	Rev	Title	Text Reference
24590-WTP-DB-ENG-01-001	002	*Basis of Design*	BOD
24590-WTP-RPT-PT-02-005	007	*Flowsheet Bases, Assumptions, and Requirements*	Flowsheet Bases, Assumptions, and Requirements
24590-101-TSA-W000-0004-172-00001	00A	*Final Report: Technical Basis for HLW Vitrification Stream Physical and Rheological Property Bounding Conditions*	HLW Vitrification Stream Property Bounding Conditions
24590-HLW-PL-RT-07-0001	003	*IHLW Waste Form Compliance Plan*	IHLW Waste Form Compliance Plan
24590-WTP-RPT-OP-01-001	005	*Operations Requirements Document*	ORD
24590-HLW-WIQP-MH-09-0002	000	*HLW Canister Racks*	WAI Qualification Plan for Canister Racks
24590-WTP-PSAR-ESH-01-002-01	05E	*Preliminary Documented Safety Analysis to Support Construction Authorization; General Information*	PDSA - General
24590-WTP-PSAR-ESH-01-002-04	05G	*Preliminary Documented Safety Analysis to Support Construction Authorization; HLW Facility Specific Information*	PDSA - HLW Facility
24590-WTP-QAM-QA-06-001	016	*Quality Assurance Manual*	QAM
24590-WTP-SRD-ESH-01-001-02	07F	*Safety Requirements Document, Volume II*	SRD
24590-HLW-WSF-ENG-07-005	004	*WAI Screening of HLW Glass Chemistry Processing Activities*	WAI Screening of HLW Glass
DE-AC27-01RV14136	M310	*DOE/BNI WTP Contract Mod No. 304, Section C - Statement of Work*	WTP Contract
24590-HLW-WSF-ENG-09-002	001	*WTP HLW Canister Lid Welding*	WTP HLW Canister Lid Welding
24590-HLW-RPT-ESH-01-001	005	*Preliminary Fire Hazards Analysis for the High-Level Waste Building*	PFHA – HLW Facility
24590-HLW-RPT-PR-01-001	012	*Waste Acceptance Impacting Items and Activities*	WAI Items and Activities
24590-HLW-WIQP-MH-09-0002	000	*HLW Canister Racks*	WAI Qualification Plan for Canister Racks
24590-HLW-WIQP-MH-09-0003	000	*HLW Standardized Bogie*	WAI Qualification Plan for HLW Standardized Bogies
24590-HLW-WIQP-MH-09-0004	00A	*HLW Crane Drip Trays*	WAI Qualification Plan for HLW Cranes

Document Number	Rev	Title	Text Reference
24590-HLW-WIQP-MH-09-0006	00A	*Canister Grapple*	WAI Qualification Plan for Canister Grapple
24590-HLW-WIQP-MH-10-0002	000	*Canister Weld Station*	WAI Qualification Plan for Canister Weld Station Table
24590-HLW-WIQP-MH-10-0003	000	*In-Cave Tools*	WAI Qualification Plan for In-Cave Tools
24590-HLW-WIQP-MH-10-0004	001	*Canister Lid Welder*	WAI Qualification Plan for Canister Lid Welders
24590-HLW-WSF-ENG-07-002	004	*WTP HLW Canister Processing Activities*	WTP HLW Canister Processing Activities
24590-HLW-WSF-ENG-07-003	004	*WTP HLW Canister Handling*	WTP HLW Canister
24590-WTP-PL-RACT-RT-0001	000	*WTP Remotability Verification Plan*	WTP Remotability Verification Plan

5.2 Other References

Document Number	Rev	Title
24590-HLW-U0D-W16T-00001	001	*HLW Room Environment Data Sheet*
24590-WTP-3DP-G04B-00004	003	*Technical Requirements Management*
24590-WTP-3DP-G04B-00046	031	*Engineering Drawings*
24590-WTP-GPG-ENG-033	002	*Evaluation For Seismic Interaction Effects*
24590-WTP-GPG-ENG-0161	000	*Technical Requirements Management*
24590-WTP-GPG-M-027	005	*Recommended Slopes for Piping Systems*
24590-WTP-GPP-SQP-208	03B	*Plant Software Life Cycle Management*
24590-WTP-M6-50-00008	003	*P&ID Symbols and Legend (Sheet 8 of 8)*
DOE-STD-1020-94	N/A	*Natural Phenomena Hazards Design and Evaluation Criteria for Department of Energy Facilities*
24590-WTP-MDD-PR-01-001	012	*Operations Research (WITNESS) Model Design Document*
24590-HLW-RPT-PE-07-001	000	*High Level Waste Vitrification Plant Capacity Enhancement Study*
24590-HLW-M8C-C5V-00006	000	*Heat Release Data For An HLW Canister With Low Conductivity Glass In The HLW Pour Tunnel*
24590-HLW-M0C-30-00003	000	*HLW Canister Weight And Volume Calculations*
24590-HLW-PISW-ENG-05-0002	001	*Life Cycle Document For Acquired Software Packaged With HLW Canister Welding Station Support Equipment*
24590-HLW-PISW-ENG-05-0005	001	*Life Cycle Document For Non-Modifiable Configurable Firmware (NMCF) Acquired With HLW Standardized Bogies*
24590-HLW-PISW-ENG-06-0001	00A	*Life Cycle Document For Acquired Software Packaged With HLW/PTF Posting Port Equipment*
24590-HLW-PISW-ENG-07-0004	000	*Life Cycle Document For Software Acquired With HLW Canister Welder*

Document Number	Rev	Title
24590-WTP-PISW-ENG-08-0001	002	*Life Cycle Document For Non-Modifiable Configurable Firmware (NMCF) Acquired With Shield Doors Crane Maintenance*
24590-HLW-PISW-ENG-05-0007	001	*Life Cycle Document for Non-Modifiable Configurable Firmware (NMCF) Acquired with Cranes, Bridge CMAA 74 (MH087)*
24590-WTP-PISW-ENG-06-0038	001	*Life Cycle Document for Non-Modifiable Configurable Firmware (NMCF) Acquired with Vertical Shield Doors, Bogie Maintenance/Transfer*

5.3 Design References

Document Number	Title
Waste Screening Forms	
24590-HLW-WSF-ENG-07-002	*WTP HLW Canister Processing Activities*
24590-HLW-WSF-ENG-09-002	*WTP HLW Canister Lid Welding*
Facility General Arrangement Plans	
24590-HLW-P1-P01T-00001	*HLW Vitrification Building General Arrangement Plan at El. -21 Ft-0 In.*
24590-HLW-P1-P01T-00002	*HLW Vitrification Building General Arrangement Plan at El. 0 Ft -0 In.*
24590-HLW-P1-P01T-00004	*HLW Vitrification Building General Arrangement Plan at El. 30 Ft-0 In.*
Facility Equipment Location Drawings	
24590-HLW-P1-P23T-00009	*HLW Vitrification Building Equipment Location Plan EL. -21'-0"/Area 9*
24590-HLW-P1-P23T-00010	*HLW Vitrification Building Equipment Location Plan EL. -21'-0"/Area 10*
24590-HLW-P1-P23T-00014	*HLW Vitrification Building Equipment Location Plan EL. -21'-0"/Area 14*
24590-HLW-P1-P23T-00015	*HLW Vitrification Building Equipment Location Plan EL. -21'-0"/Area 15*
24590-HLW-P1-P23T-00119	*HLW Vitrification Building Equipment Location Plan EL. 0'-0"/Area 119*
24590-HLW-P1-P23T-00120	*HLW Vitrification Building Equipment Location Plan EL. 0'-0"/Area 120*
24590-HLW-P1-P23T-00213	*HLW Vitrification Building Equipment Location Plan EL. 14'-0"/Area 213*
24590-HLW-P1-P23T-00214	*HLW Vitrification Building Equipment Location Plan EL. 14'-0"/Area 214*
24590-HLW-P1-P23T-00215	*HLW Vitrification Building Equipment Location Plan EL. 14'-0"/Area 215*
24590-HLW-P1-P23T-00218	*HLW Vitrification Building Equipment Location Plan EL. 14'-0"/Area 218*
24590-HLW-P1-P23T-00219	*HLW Vitrification Building Equipment Location Plan EL. 14'-0"/Area 219*
24590-HLW-P1-P23T-00220	*HLW Vitrification Building Equipment Location Plan EL. 14'-0"/Area 220*
P&IDs	
24590-HLW-M6-HPH-00001001	*P&ID - HLW Canister Pour Handling System Instrument Service Air*
24590-HLW-M6-HPH-00002001	*P&ID - HLW Canister Pour Handling System Shield Gas*
Mechanical Handling Diagrams	
24590-HLW-M7-HPH-00001001	*HLW Vitrification System HPH Mechanical Handling Diagram Canister Pour Handling Canister Handling Cave*
24590-HLW-M7-HPH-00001002	*HLW Vitrification System HPH Mechanical Handling Diagram Canister Pour Handling Canister Handling Cave*

Document Number	Title
24590-HLW-M7-HPH-00001003	*HLW Vitrification System HPH Mechanical Handling Diagram Canister Pour Handling Pour Tunnel 1*
24590-HLW-M7-HPH-00001004	*HLW Vitrification System HPH Mechanical Handling Diagram Canister Pour Handling Canister Weld Station*
24590-HLW-M7-HPH-00001005	*HLW Vitrification System HPH Mechanical Handling Diagram Canister Pour Handling Pour Tunnel 2*
24590-HLW-M7-HPH-00001006	*HLW Vitrification System HPH Mechanical Handling Diagram Canister Pour Handling System*
24590-HLW-M7-HPH-00001007	*HLW Vitrification System HPH Mechanical Handling Diagram Canister Pour Handling System*
Mechanical Sequence Diagram (MSD)	
24590-HLW-M1-HPH-00001	*Mechanical Sequence Diagram for HLW Vitrification System HPH*
Engineering Specifications	
24590-WTP-3PS-MJKG-T0003	*Engineering Specification for CMAA 70 High Integrity Cranes*
24590-WTP-3PS-MQL0-T0003	*Engineering Specification for Special Grapples and Lifting Devices*
24590-HLW-3PS-30-T0001	*Engineering Specification for HLW Canister Racks*
24590-WTP-3PS-ADDH-T0006	*Engineering Specification for QL Crane Maintenance Shield Doors for HLW and PTF for Safety and Seismic Designations*
24590-WTP-3PS-MQR0-T0002	*Engineering Specification for HLW Standardized Bogies*
24590-WTP-3PS-ADDH-T0001	*Engineering Specification for HLW/PTF Bogie Shield Doors*
24590-WTP-3PS-ADDC-T0002	*Engineering Specification for HLW/PT System Transfer Hatches, Hatch Drives, Hatch Pushrod Assemblies, and Floor Penetration Liner*
24590-HLW-3PS-NW00-T0001	*Engineering Specification for System HPH Canister Welding Station*
24590-WTP-3PS-MV00-T0004	*Engineering Specification for HLW Canister Welding Machine*
24590-WTP-3PS-M000-T0006	*Engineering Specification for WTP Facility Posting Port*
24590-WTP-3PS-M000-T0007	*Engineering Specification for WTP Facility Posting Port Glovebox*
Project Equipment Drawings & Vendor Drawings	
24590-HLW-M0X-M40T-00004	*Mechanical Handling Equipment List for HLW System HPH*

Appendix A Test Objectives, Conditions, and Acceptance Criteria

NOTE: Demonstrations and Tests identified in this appendix are preliminary, pending completion of design activities. They are established to document the flowdown of verification needs established in Section 3 but are not sufficiently detailed for development of specific system and equipment test plans. They may be used for general planning only. This note is to be removed when design is sufficiently progressed to provide the details needed to establish the basis for testing and acceptance criteria.

Requirement (para #)	Test (T) or Demo (D)	COM or SU	Plan (including SSCs)**	Acceptance Criteria (TAC or GTC)*	Notes/Comments	Test Conditions
3.4.1.3	D	SU/COM	Demonstrate the HPH has the capability of supporting a production rate of 7.5 MTG per day.	(GTC) 1. Demonstrate that an empty canister can be transferred from the HRH system and run through the entire HPH system process. Confirm that the following process step times can be achieved • Demonstrate that a canister can be lifted from the import bogie (HRH-TRLY-00002) and transferred to pour tunnel bogie (HPH-TRLY-00011) in less than 46 minutes • Demonstrate that a canister can be lifted from the import bogie (HRH-TRLY-00002) and transferred to a storage location along the southern side the buffer rack (HPH-MHAN-00017) in less than 38 minutes • Demonstrate that a canister can be moved from the southern side of the buffer rack (HPH-MHAN-00017) and transferred to pour tunnel bogie (HPH-TRLY-00011) in less than 23 minutes • Demonstrate that pour tunnel bogie (HPH-TRLY-00011) can be transferred from the canister loading position to the glass pour position in less than 8 minutes (this includes engaging the bogie locking bolt) • Demonstrate that a canister can be removed from pour tunnel bogie (HPH-TRLY-00011) and be transferred to the southern side of the canister cooling rack (HPH-MHAN-00014) in less than 27 minutes • Demonstrate that a canister can be transferred from the cooling rack (HPH-MHAN-00014) to the east or west weld station in less than 21 minutes • Demonstrate that ALL of the following can be completed in less than 498 minutes: a) Glass fill height can be measured b) A glass sample can be collected from the canister and placed into a sample vial (GTC) c) A primary lid can be welded onto a canister (GTC) d) The weld cap can be inspected and the values of the welding parameters can be confirmed (GTC) 1. Demonstrate that primary lids can be transferred to the canister weld station via the glovebox and posting port (24590-HLW-M0-HPH-GB-00001 and 24590-HLW-DD-HPH-TWDVC-00009) (GTC) 2. Demonstrate that the collected glass sample can be transferred from the weld station and placed inside the glass shard sample transfer flask located in the crane decontamination area. Demonstrate that the lid can be placed on the flask body and bolts can be tightened (GTC)	The process times are taken from Step number 12, Table 93 of 24590-WTP-MDD-PR-01-001 rev 12. Test 3: The bolts are tightened manually after the shielded lid has been fitted to the flask body.	Simulated Operating Condition

Requirement (para #)	Test (T) or Demo (D)	COM or SU	Plan (including SSCs)**	Acceptance Criteria (TAC or GTC)*	Notes/Comments	Test Conditions
3.4.1.5	D	SU/COM	Demonstrate the canister transfers listed below: • Receive clean canister from HRH to the canister handling cave through the canister receipt import hatch (A.1) • Transfer canister from HRH into the canister handling cave buffer rack (A.2) • Transfer canister from the storage rack to the pour tunnel bogie through the canister handling cave export hatch (A.3) • Transfer empty canister to the melter pour spout (A.4) • Transfer filled canister to pour tunnel hatch (A.6) • Transfer over-temperature canister to storage rack (A.11) • Transfer filled canister to cooling rack (A.7, E.2) • Transport filled canister to weld station (A.8, E.3) • Transfer underfilled canister to buffer rack (A.13) • Transfer sealed canister to storage rack (A.22) • Transfer sealed canister to the HDH canister rinse bogie (A.23, E.6) • Transfer defective canister from canister rinse bogie from system HDH (E.1)	**(GTC)** The HPH mechanical handling equipment remotely performs the canister transfers without failure or dropping a canister.	These demonstrations are WAI. **This demonstration/test is planned for completion by Start-Up.*	A standard empty test canister will be utilized during demonstration of canister transfer capabilities.
3.4.1.6	D	SU/COM	Remote Solid Waste Transfer to the HSH System	**(GTC)** 1. Demonstrate that using weld station MSMs solid waste can be remotely loaded into a waste basket and the waste basket lid can be fitted 2. Demonstrate that the waste basket can be remotely loaded into the waste basket transfer container (24590-HLW-MH-HPH-MHAN-00045) using the process cranes (HPH-CRN-00001 and 00002) 3. Demonstrate that the process cranes (HPH-CRN-00001 and 00002) can be used to locate the waste basket transfer container onto the canister bogie sleeve 4. Demonstrate that when the bogie is located at the north end of the pour tunnel the waste basket transfer container can be lifted into the melter cave using the melter cave cranes (HSH-MANIP-00010 and 00023)	The test maybe performed with an empty waste basket and is to be performed using the west bogie in each pour tunnel (HPH-TRLY-00004 and HPH-TRLY-00011) Test 4 will require that the pour tunnel cover plates be removed prior to lifting the container into the melter caves. The cover plates are part of the melter cave handling system.	
3.4.4.1	D	SU/COM	Demonstrate remotability in accordance with test plans developed by the Commissioning Remote Handling work group per 24590-WTP-PL-RACT-RT-0001, *WTP Remotability Verification Plan*.	**(GTC)** Successful remote removal and re-installation of the all the HPH equipment/ components listed in the test plans.	Physical demonstration	Cold Commissioning
3.4.4.1	D	SU/COM	Remote handling of Pour Tunnel Bogie Canister Sleeve	1. Demonstrate that the pour tunnel bogie sleeve can be removed from the bogie and placed onto the canister sleeve storage rack (HPH-MHAN-00028) in the canister handling cave using the sleeve lifting beam (HPH-LIFT-00001) (GTC) 2. Demonstrate that the canister sleeve can be removed from the canister handling cave storage rack and be placed onto the pour tunnel bogie (GTC)	Tests to be performed for each bogie canister sleeve (HPH-TRLY-00006, HPH-TRLY-00007, HPH-TRLY-00012 and HPH-TRLY-00013)	

Requirement (para #)	Test (T) or Demo (D)	COM or SU	Plan (including SSCs)**	Acceptance Criteria (TAC or GTC)*	Notes/Comments	Test Conditions
3.4.4.1	D	SU/COM	Remote Maintenance of welding machine	(GTC) Demonstrate that the following welding machine components/modules can be replaced remotely. The LAI number in brackets is the vendor part number: 1. Arc voltage control assembly (LAI-B3555-G01) 2. AVC proximity switches (LAI-B3556-003), canister clamp proximity switch (LAI-B3550-002) & home position proximity switch (LAI-B3563-004) 3. Torch assembly (LAI-B3550-G01). 4. Torch body & electrode (sub-component of LAI-B3553-G01) 5. Camera assembly (LAI-B3558-G01) 6. Wire feed assembly (LAI-B3551-G01) 7. Drive motor assembly (LAI-B3552-G01) 8. Counterweight 9. Record the time taken to perform the maintenance tasks Demonstrate that the following can be replaced remotely: 1. All welder power and control cabling 2. Shield gas and instrument air lines Demonstrate that the following can be performed remotely: 1. The welder can removed as a unit from the weld station carriage and can be re-fitted to the carriage 2. The electrode torch position can be adjusted to accommodate both primary and secondary lid weld torch positions	The installation/removal steps for components/modules are contained in the vendor maintenance manual 24590-CM-POA-HCHH-00004-03-00005 and in vendor design report 24590-CM-POA-HCHH-00004-08-00001. All in-cave work to be demonstrated using permanently installed MSMs and cranes. MSM compatible tooling will be required to complete this test work.	
3.4.4.1	D	SU/COM	Remote Maintenance of the Weld Station Carriage	1. Demonstrate that the welding carriage travel proximity switches can be replaced remotely 2. Demonstrate that the welding carriage actuator proximity switches can be replaced remotely 3. Demonstrate that all power and control cabling can be replaced remotely 4. Demonstrate that the weld carriage drive motor can be replaced remotely 5. Demonstrate that the weld station carriage can be remotely removed from the weld table Demonstrate that the vertical actuator can be removed from the weld carriage remotely	The installation/removal steps for remote maintenance are contained in the vendor maintenance manual 24590-CM-POA-HCHH-00003-01-00009 All in-cave work to be demonstrated using permanently installed MSMs and cranes. MSM compatible tooling will be required to complete this test work.	
3.4.4.4	D	SU/COM	As-Builts for In-Cave/Canyon Dimensional Tolerances	(GTC) Demonstrate remotability of installed equipment in accordance with 24590-WTP-PL-RACT-RT-0001, *WTP Remotability Verification Plan*.		
3.5.1.3	D	SU?COM	Process Crane Recovery System	(GTC) 1. Demonstrate that the process cranes (HPH-CRN-00001 and HPH-CRN-00002) bridge recovery jack-down wheels can be deployed and used to travel the full rail length 2. Demonstrate that the process cranes (HPH-CRN-00001 and HPH-CRN-00002) trolley recovery jack-down wheels can be deployed and used to travel the full length of the trolley rails 3. Demonstrate that the process cranes (HPH-CRN-00001 and HPH-CRN-00002) recovery hoist motors can be used to lower/raise the crane hook through its complete travel range	"Full rail length" means from the full east-west travel distance of the cranes. There is no requirement for the crane to be carrying a load for these tests	
3.5.4.2	D	SU/COM	Demonstrate the crane brakes are set when the power is off.	(GTC) The crane brakes set when the power is off.		

Requirement (para #)	Test (T) or Demo (D)	COM or SU	Plan (including SSCs)**	Acceptance Criteria (TAC or GTC)*	Notes/Comments	Test Conditions
3.5.4.3	T	SU/COM	Recovery of in-cave wall mounted light	(GTC) 1. Demonstrate that the upper in-cave process crane (HPH-CRN-00002)can be used to remove a weld station MSM slave arms and transport the arm into the crane maintenance area. 2. Demonstrate that the upper in-cave process crane (HPH-CRN-00002) can be used to re-fit a weld station MSM slave arm.	Testing maybe performed on one MSM only; Commissioning to select the MSM (HPH-MANIP-00008, HPH-MANIP-00009, HPH-MANIP-00010 and HPH-MANIP-00011)	
3.6.1.1	D	SU/COM	Recovery of pour tunnel bogie	(GTC) Demonstrate that a pour tunnel bogie can be recovered if it fails inside the pour cave and concludes with the bogies positioned at its maintenance/repair station inside the bogie maintenance area.		
3.6.1.5	D	SU/COM	Demonstrate the ability to monitor canister exterior temperatures during the glass pour.	(GTC) Demonstrate the pour tunnel bogie sleeves allow for monitoring of the glass fill height.		
3.7.4.1	D	SU/COM	Demonstrate the HPH systems capability to use a MSM to manually disengage the grapple from the canister.	(GTC) An in-cave MSM is capable of disengaging a grapple from the canister.		
3.6.1.1	D	SU/COM	Demonstrate the capability to recover a filed bogie to a suitable location for maintenance.	(GTC) Demonstrate that the pour tunnel bogie manual hand-crank can be used to pull the bogie from the pour position to the pour tunnel hatch, and push the bogie north towards the pour tunnel hatch. (GTC)	Test to be performed on each bogie (HPH-TRLY-00001, HPH-TRLY-00004, HPH-TRLY-00010 and HPH-TRLY-00011)	The bogies are to be loaded with a canister weighing approximately 9260 (max) lbs
3.8.1.1	T	SU/COM	Glovebox Internal Pressure – Perform a test to ensure that the glovebox maintains a negative pressure relative to the surrounding area.	(GTC) 1. Demonstrate that the glovebox (24590-HLW-M0-HPH-GB-00001) air flow rate is set at the correct value (. Nominal flow rate 200 cfm. 2. Demonstrate that the air velocity through a single open glove port of the glovebox ((24590-HLW-M0-HPH-GB-00001) is between 100-150 fpm.	The glovebox pressure and flow rate (including the range of permitted values) will set up as part of the C5 ventilation system balance. Refer to V&ID 24590-HLW-M8-C5V-00003001 and system design description 24590-HLW-3ZD-C5V-00001 Test 2 simulates a breach of the glovebox equivalent to the loss of <u>one</u> glove. This test will be performed as part of the C5 ventilation system balance. Refer to V&ID 24590-HLW-M8-C5V-00003001 and system design description 24590-HLW-3ZD-C5V-00001 The air flow requirement is contained in 24590-WTP-3PS-M000-T0007, Appendix B. Test 2 is to be added to the vent system design description 24590-HLW-3ZD-C5V-00001. This is being tracked by ATS 24590-WTP-ATS-QAIS-10-0995.	
3.8.1.4	D	SU/COM	Demonstrate the ability to import and use portable instruments within the glovebox including the ability to measure contamination levels on swabs.	(GTC) The glovebox has the ability to import and use portable instruments within the glovebox including the ability to measure contamination levels on swabs.	Measurement is performed in the glovebox	All normal operations and systems operating
3.9.1.1	T	SU/COM	Demonstrate in advance the final closure welding process on full-scale canisters. The canisters will be helium-leak tested to ensure leak-tightness to less than 1 × 10-4 atm-cc/sec helium	(GTC) Pass leak test demonstrating the successful closure of full-scale canisters using the welding process.		

Requirement (para #)	Test (T) or Demo (D)	COM or SU	Plan (including SSCs)**	Acceptance Criteria (TAC or GTC)*	Notes/Comments	Test Conditions
3.9.1.1	D	SU/COM	Calibration of welding machine components	(GTC) Demonstrate that the following weld machine calibrations can be performed: 1. Current calibration 2. Voltage calibration 3. Shield gas flow calibration Demonstrate that verification can be performed on the following parameters: 1. Rotation accuracy 2. Rotation speed 3. Rotation dwell 4. Wire feed accuracy 5. Wire feed speed 6. Power supply timing	This testing is Waste Acceptance Impacting Welding machine calibration and verification is addressed in the vendor maintenance manual 24590-CM-POA-HCHH-00004-03-00005	
3.9.1.1	D	SU/COM	Demonstrate primary and secondary lid weld repair using the wire feed weld process.	(GTC) 1. Demonstrate that the wire feed system can be used for repair purposes on the primary lid weld 2. Demonstrate that the wire feed system can be used for repair purposes on the secondary lid weld	This testing is Waste Acceptance Impacting This is a full demonstration of the weld machine operability. The testing shall be performed under simulated operational conditions; the welding machine shall be fitted to the weld station carriage for this test. A pre-requisite to starting this test is the determination of the values & ranges of the critical welding parameters; this work is outside the scope of this system description. This open issue is tracked on 24590-WTP-ATS-QAIS-10-0995 The number of welds to be performed has yet to be determined. This open issue is tracked on 24590-WTP-ATS-QAIS-10-0995 Specific test acceptance criteria have not yet been developed. This open issue is tracked on 24590-WTP-ATS-QAIS-10-0995	

Requirement (para #)	Test (T) or Demo (D)	COM or SU	Plan (including SSCs)**	Acceptance Criteria (TAC or GTC)*	Notes/Comments	Test Conditions
3.9.1.1	D	SU/COM	Demonstrate the Operation of the Welding Machine for a Primary and Secondary Lid Weld	Demonstrate that the weld machine produces a primary lid weld that: 1. Meets the welding detail shown on drawing 24590-HLW-M0-30-00001008 (GTC) 2. Is leak tight to less than 10^{-4} atm-cc/sec helium in accordance with Section V of the ASME B&PVC (GTC) 3. Meets the requirements of Section IX of the ASME B&PVC (GTC) Confirm the values of the critical welding parameters remained in the allowable ranges (GTC) Demonstrate that the weld surface can be visually inspected using the weld station cameras (GTC)	This testing is Waste Acceptance Impacting This is a full demonstration of the weld machine operability. The testing shall be performed under simulated operational conditions the welding machine shall be fitted to the weld station carriage for this test. A pre-requisite to starting this test is the determination of the values & ranges of the critical welding parameters; this work is outside the scope of this system description. This open issue is tracked on 24590-WTP-ATS-QAIS-10-0995 The number of welds to be performed has yet to be determined. This open issue is tracked on 24590-WTP-ATS-QAIS-10-0995 Refer to vendor design report 24590-CM-POA-HCHH-00004-08-00001 and opertaing manual 24590-CM-POA-HCHH-00004-12-00001.	
3.9.1.3	D	SU/COM	Demonstrate cleaning technique that removes glass deposits from the external surface and flange area of the canister without causing damage beyond minor scratching of the surface.	**(GTC)** Successful removal of exterior glass deposits from canister and flange with use of needle gun.	This demonstration is WAI.	
3.9.1.4	D	SU/COM	Demonstrate the Operation of the flange conditioning tool	**(GTC)** Demonstrate that the flange conditioning tool (24590-HLW-FH-HPH-TOOL-00007) can be used remotely to machine a recess into the top of the canister that meets the requirements shown on drawing 24590-HLW-M0-30-00001008	This testing is Waste Acceptance Impacting This is a full demonstration of the flange conditioning tool operability. The testing shall be performed under simulated operational conditions.	
3.9.1.5	D	SU/COM	To show compliance with the above WCP requirements, the glass fill height measurement process will be demonstrated prior to the start of hot commissioning.	**(GTC)** Successful glass height measurement demonstrating the functionality of the equipment and measurement process.	Glass fill height measurement post-fill at the weld station is a WAI activity. The cameras are Non-WAI.	
3.9.4.1	D	SU/COM	Demonstrate the ability to retrieve a glass sample to support process and product control needs.	**(GTC)** Glass sample successfully retrieved by glass sample vacuum tools operated using HPH MSM's. **(GTC)** The system successfully transports sample vial to crane decontamination area and successfully exports sample vial.		
3.10.1.1	D	SU/COM	Demonstrate that the manipulators can perform the remote installation, operation, maintenance, removal, and disposal of the in-cave equipment. Assistance may be provided by in-cave cranes or other manipulators.	**(GTC)** The manipulators successfully perform remote installation, operation, maintenance, removal and disposal.		

Requirement (para #)	Test (T) or Demo (D)	COM or SU	Plan (including SSCs)**	Acceptance Criteria (TAC or GTC)*	Notes/Comments	Test Conditions
3.10.1.1	D	SU/COM	Bogie Decontamination in Pour Tunnel	**(GTC)** Demonstrate that when a bogie is located adjacent to the pour tunnel shield window, the pour tunnel MSM's maybe used to move the spray wand (HPH-TOOL-00010 or 00029) across the top surface of the bogie chassis. Using operational experience and engineering judgment confirm that the MSM and tooling has sufficient dexterity to decontaminate a bogie.	Remove the canister sleeve from the bogie prior to starting this test Test to be performed on both bogies in one pour tunnel only (HPH-TRLY-00001 and 00004 pour tunnel 1; HPH-TRLY-00010 and 00011 pour tunnel 2).	
3.10.4.1	D	SU/COM	Recovery of MSM In-Cave Slave Arms	**(GTC)** 3. Demonstrate that the upper in-cave process crane (HPH-CRN-00002)can be used to remove a weld station MSM slave arms and transport the arm into the crane maintenance area 4. Demonstrate that the upper in-cave process crane (HPH-CRN-00002) can be used to re-fit a weld station MSM slave arm.	Testing maybe performed on one MSM only; Commissioning to select the MSM (HPH-MANIP-00008, HPH-MANIP-00009, HPH-MANIP-00010 and HPH-MANIP-00011)	
3.11.1.2	T	SU/COM	Test SPAD installation for full sealing around the aperture perimeter.	**(GTC)** The SPADs fully seal around the aperture perimeter.		
3.11.4.2	D	SU/COM	Demonstrate shield door recovery in accordance with 24590-WTP-PL-RACT-RT-0001, *WTP Remotability Verification Plan.* Shield doors HPH-DOOR-00001, 00002, 00003, 00004, 00005 and 00008	**(GTC)** Successful closing of shield doors using recovery devices.		Power supply to the shield doors disconnected
3.11.4.2	D	SU/COM	Recovery of Weld Station Shield Window Guards	**(GTC)** 1. Demonstrate that the upper in-cave process crane (HPH-CRN-00002) can be used to remove the weld station shield window guards. 2. Demonstrate that the upper in-cave process crane (HPH-CRN-00002) can be used to re-fit the weld station shield window guards.		

Requirement (para #)	Test (T) or Demo (D)	COM or SU	Plan (including SSCs)**	Acceptance Criteria (TAC or GTC)*	Notes/Comments	Test Conditions
3.12.2.1.1	T	SU/COM	Operation of Posting Port Safety Interlocks	**(TAC)** 1. Demonstrate the safety shield door interlock prevents posting port (HPH-TWDVC-00009) in-cave and out-cave shield doors being in the open position at the same time 2. Demonstrate the safety gamma interlock prevents posting port (HPH-TWDVC-00009) out-cave shield door from opening if the gamma monitor (HPH-RS-3701 or HPH-RS-3801) detects a high radiation source	1a) Close both shield doors Open the out-cave shield door Attempt to open the in-cave shield door Confirm the safety interlock does not permit the in-cave shield door to open 1b) Close both shield doors Open the in-cave shield door Attempt to open the out-cave shield door Confirm the safety interlock does not permit the out-cave shield door to open 2a) Close both shield doors Simulate a high radiation source detection at instrument HPH-RS-3701 Attempt to open the out-cave shield door Confirm the safety interlock does not permit the out-cave shield door to open 2b) Close both shield doors Simulate a high radiation source setection at instrument HPH-RS-3801 Attempt to open the out-cave shield door Confirm the safety interlock does not permit the out-cave shield door to open The actual operational set point for the gamma monitor is not required to complete this test. The purpose of this test is to confirm the functionality of the interlock. The gamma instrument set point will be determined prior to the start of hot operations.	
3.12.2.1.2	T	SU/COM	Operation of Pour Tunnel Bogie Safety Interlock	**(TAC)** On completion of a glass pour, demonstrate the safety interlock prevents the pour tunnel bogies (HPH-TRLY-00001, HPH-TRLY-00004, HPH-TRLY-00010 and HPH-TRLY-00011) moving more than 6' south of the glass pour position unless the canister has first cooled sufficiently	This interlock is to be tested on each of the four bogies	
3.12.4.2.1	D	SU/COM	Shield Door Ventilation Air Gaps	**(TAC)** 1. Demonstrate that the air gaps around the maintenance area and decontamination area vertical and horizontal shield doors are set, as required, to provide the correct containment air flow into the C5/R5 canister handling cave. Flow rate 2200 cfm. (TAC) 2. Demonstrate that the air gaps around the pour tunnel bogie shield doors are set, as required, to provide the correct containment air flow into the C5/R5 pour tunnels. Flow rate 2250 cfm (TAC) 3. Demonstrate that the vertical air gap between the edges of the pour tunnel bogie doors and the wall is a minimum of 0.5". This requirement extends from the base of the door to a height of 12" from the base of the door.	The air gaps and flow rate (including the range of permitted values) will be set up as part of the C5 ventilation system balance. Refer to V&IDs 24590-HLW-M8-C5V-00003001, 24590-HLW-M8-C5V-00002001 and system description 24590-HLW-3YD-30-00002 The requirement in Test 3 is to limit floor loading in the bogie maintenance area due to flooding	

Requirement (para #)	Test (T) or Demo (D)	COM or SU	Plan (including SSCs)**	Acceptance Criteria (TAC or GTC)*	Notes/Comments	Test Conditions
3.12.4.2.2	D	SU/COM	Demonstrate the operability of the following interlocks that prevent damage to the HDH equipment: • Prevent canister handling cave process cranes HPH-CRN-00001 and 00002 from passing through the crane maintenance area or crane decontamination area shield door apertures unless the associated shield doors are open, the crane hook is raised, and the crane trolley is aligned with the horizontal door aperture. • Prevent horizontal crane shield doors HPH-DOOR-00004 and 00005 from opening or closing unless their co-located vertical shield is closed. • Prevent vertical crane shield doors HPH-DOOR-00001 and 00008 from opening or closing unless their co-located horizontal shield door is open.	**(GTC)** The listed interlocks are operable.		
3.12.4.2.3	D	SU/COM	Demonstrate the listed hatches do not open unless a bogie is beneath the hatch: • Pour tunnel hatch	**(GTC)** The listed interlocks are operable.		
3.12.4.2.4	D	SU/COM	Demonstrate the operability of local/maintenance mode features and functions during operation from the local control panels. • Shield doors (HPH-DOOR-00001, -00002, 00003, -00004, -00005, -00008) • Hatches (HPH-HTCH-00001, -00002) • Cranes and associated hoists (HPH-CRN-00001, -00002) • Crane cable reels (HPH-RCVY-00007, -00009) • Bogies (HPH-TRLY-00001, -00004, -00010, -00011) • Locking Bolts (HPH-TWDVC-00003, -00004, -00015, -00016)	**(GTC)** The equipment successfully demonstrates the local/maintenance mode features and functions during operation from the local control panels.		
3.12.4.2.4	D	SU/COM	Alignment of Canister and Melter Pour Spout	**(GTC)** Demonstrate that when the bogie is transferred to the glass pour location, the canister center line aligns with the pour spout center line to within +/- 1.125", and confirm the locking bolt can engage the bracket on the bogie chassis	Test to be performed on each bogie (HPH-TRLY-00001, HPH-TRLY-00004, HPH-TRLY-00010 and HPH-TRLY-00011) The alignment is to be confirmed in the East-West and North-South directions	
3.12.4.2.5	D	SU/COM	Demonstrate the operability of the independent protection interlocks during operation from the local control panel. • Cranes (HPH-CRN-00001, -00002, -00009, -00012, -00013) • Posting Port (HPH-TWDVC-00009) • Shield doors (HPH-DOOR-00001, -00002, -00003, -00004, -00005, -00008) • Hatches (HPH-HTCH-00001, -00002) • Locking Bolts (HPH-TWDVC-00003, -00004, -00015, -00016 • Weld Station Equipment • Flange Conditioning Tool	**(GTC)** The equipment successfully demonstrates the local/maintenance mode features and functions during operation from the local control panels.		

Notes:

* Test acceptance criteria (TAC) are based on requirements from authorization basis documents. General test criteria (GTC) are requirements from other sources.

Any non-safety related anomalies or issues experienced during the execution of a test or demonstration plan to validate a requirement can be put on **[HOLD]** until the issue has been resolved.

Appendix B Descriptions of System Functional Flow and Interactions

Function: A.1	Receive empty canister
Detailed description: The system receives clean, empty canisters from the HRH system. Once the canister handling cave import hatch is opened, using the in-cave crane, the grapple is lowered to engage the canister and raised to transfer height.	
Initiation: The function initiates once the canister handling cave import hatch opened by HRH system.	
Termination: The function terminates once the canister handling cave import hatch is closed by HRH system.	
Parallel or sequential functions: None	
Applicable Modes: Normal operations	

Function: A.2	Store empty canister
Detailed description: The operator selects the buffer rack position and moves the canister to position above the selected buffer rack using the in-cave crane. The canister is lowered into the buffer rack using the in-cave crane, and then the grapple is released and raised to transfer height.	
Initiation: This function initiates as the operator selects the onward route for the canister.	
Termination: This function terminates once the canister has reached the buffer rack and the grapple has disengaged the canister and returned to transfer height.	
Parallel or sequential functions: None	
Applicable Modes: Normal operations	

Function: A.3	Transfer empty canister to pour tunnel bogie.
Detailed description: Empty canister is transferred directly to selected pour tunnel bogie. Empty canister is transferred from buffer rack to selected pour tunnel bogie. The operator selects buffer rack position and moves in-cave crane to position above selected buffer rack. The grapple is lowered and engages the canister. The canister is raised to transfer height and transferred to the selected pour tunnel.	
Initiation: This function initiates once the operator selects the onward route for the canister.	
Termination: This function terminates once the canister has been placed securely in the pour tunnel bogie.	
Parallel or sequential functions: None	
Applicable Modes: Normal operations	

Function: A.4	Transport empty canister to the selected pour spout
Detailed description: The empty canister is transferred to the selected melter pour spout using the selected pour tunnel bogie. The bogie locking bolt is engaged and the pouring sequence is activated to fill canister.	
Initiation: This function initiates once the canister is placed in selected pour tunnel bogie.	
Termination: This function terminates once the canister is filled.	
Parallel or sequential functions: None	
Applicable Modes: Normal operations	

Function: A.5	Receive poured glass
Detailed description: The pour tunnel bogie remains locked in the melter pour position for the duration of the glass pour.	
Initiation: This function initiates once the bogie locking bolt has been engaged. The bogie sleeve supports a filled canister up to a prescribed weight and accurately positions the canister to prevent misalignment with the melter spout.	
Termination: This function terminates once the HMP system pour sequence is complete and the bogie locking bolt has been disengaged.	
Parallel or sequential functions: The HMP system pour sequence is activated to fill the empty canister once the bogie locking bolt has been engaged.	
Applicable Modes: Normal operations	

Function: A.6	Transport filled canister to the pour tunnel hatch
Detailed description: Once the bogie locking bolt has been disengaged, the filled canister is moved on the pour tunnel bogie from the melter pour spout to the canister cooling position. The canister remains in this position for a pre-determined amount of time to allow for cooling. Then the filled canister is moved on the pour tunnel bogie to the pour tunnel hatch.	
Initiation: This function initiates upon disengaging the bogie locking bolt.	
Termination: This function terminates once the pour tunnel bogie is beneath pour tunnel hatch.	
Parallel or sequential functions: None	
Applicable Modes: Normal operations	

Function: A.7	Transport filled canister to the cooling rack.
Detailed description: The in-cave crane is moved to position above the selected pour tunnel hatch. The pour tunnel hatch is opened and the grapple is lowered to engage the filled canister. The canister is raised to transfer height and the pour tunnel hatch is closed. The operator selects the cooling rack position and moves the filled canister to position above the selected cooling rack position using the in-cave crane. The filled canister is then lowered into the cooling rack. The grapple is then released and raised to transfer height. Then allow the filled canister to cool prior to welding operations.	
Initiation: This function initiates once the in-cave crane in position above the selected pour tunnel hatch.	
Termination: This function terminates once the canister has cooled.	
Parallel or sequential functions: None	
Applicable Modes: Normal operations	

Function: A.8	Transport filled canister to the weld station/inspect for exterior glass
Detailed description: The operator selects cooled canister and moves the in-cave crane above the selected cooling rack position. The grapple is lowered to engage the canister and raised to transfer height. The filled canister is moved to position above the selected weld station using the in-cave crane. The filled canister is lowered into the weld station through the camera viewing range. The filled canister is then inspected for glass deposits. If the canister passes inspection, the grapple is released from the filled canister and raised to transfer height. If the filled canister fails inspection, the filled canister will remain suspended for glass removal.	
Initiation: This function initiates once the filled canister has cooled and in-cave crane has been moved above selected cooling rack.	
Termination: This function terminates once the canister inspection is complete	
Parallel or sequential functions: None	
Applicable Modes: Normal operations	

Function: A.9	Remove exterior glass deposits and re-inspect the canister
Detailed description: The weld station MSMs operates the pneumatic needle descaler are used to remove solid glass deposits from the canister exterior. The in-cave crane maneuvers the canister as necessary to facilitate glass removal. The canister is re-inspected for glass deposits. If the canister passes re-inspection, the grapple is released from the filled canister and raised to transfer height.	
Initiation: This function initiates upon the canister failing inspection.	
Termination: This function terminates upon the removal of exterior glass deposits.	
Parallel or sequential functions: None	
Applicable Modes: Normal operations	

Function: A.10	Measure canister flange temperature
Detailed description: The canister temperature is recorded while the canister is in the weld station. The weld station MSM positions the temperature measurement instrument to measure the canister flange temperature. Temperature must be verified to be below 350°F,	
Initiation: This function initiates once canister has passed glass deposit inspection	
Termination: This function initiates once the temperature has been recorded.	
Parallel or sequential functions: None	
Applicable Modes: Normal operations	

Function: A.11	Store over-temperature canister
Detailed description: If the canister is not below the prescribed surface temperature, the canister must be stored for cooling. The in-cave crane grapple is lowered and engages the canister. The canister is then raised to transfer height. The canister is transferred from the weld station to and placed onto a storage rack for cooling. The grapple disengages the canister during the cooling period. After the cooling period, the in-cave crane is positioned above the canister, the grapple is lowered and engages the canister and the canister is raised to transfer height. The in-cave crane returns the canister to the weld station.	
Initiation: This function initiates upon a high canister surface temperature measurement, over the prescribed limit.	
Termination: This function terminates once the cooling period has expired and the canister has been returned to the weld station.	
Parallel or sequential functions: Weld station resumes normal operation during canister cooling period.	
Applicable Modes: Normal operations	

Function: A.12	Measure glass fill height
Detailed description: The HLW canisters must be filled with glass to a minimum height equivalent to 87% of the volume of the canister. The average fill height is to be 95%. The weld station MSM positions the glass level detector to measure the canister level relative to the canister flange.	
Initiation: This function is initiated once the temperature has been recorded.	
Termination: This function terminate once the fill height has been measured and recorded.	
Parallel or sequential functions: None	
Applicable Modes: Normal operations	

Function: A.13	Transfer underfilled canister to buffer rack
Detailed description: The in-cave canister handling crane is positioned above the underfilled canister. The grapple is lowered and engages the underfilled canister. The underfilled canister is raised to transfer height and transferred to the buffer rack.	
Initiation: This function initiates once the canister fill height measurement fails to meet the required minimum.	
Termination: This function terminates once the underfilled canister has reached the buffer rack.	
Parallel or sequential functions: None	
Applicable Modes: Normal operations	

Function: A.14	Inspect canister head space, flange and lid
Detailed description: The next step is to visually inspect the inside of the canister to verify it free of foreign debris. The inspection is performed using the weld station closed circuit television (CCTV) camera. The canister head space is inspected for free liquids or foreign materials. The canister flange is inspected for damage, exterior glass deposits or foreign materials. The lid is inspected for foreign materials. If the canister passes the inspection, the lidding process begins. If the canister does not pass the inspection, rework or repair is required.	
Initiation: This function initiates once a successful glass fill height has been recorded.	
Termination: This function terminates once the canister passes the visual inspection for foreign debris.	
Parallel or sequential functions: None	
Applicable Modes: Normal operations	

Function: A.15	Rework and/or clean canister flange area
Detailed description: The in-cave canister handling crane places the flange conditioning tool on the canister flange to rework damaged areas. The weld station MSM and associated tools remove foreign materials and free liquids from the flange and head space. Exterior glass deposits are removed from the flange, and the lid is cleaned, as necessary.	
Initiation: This function initiates upon a failed inspection of weld area and flange.	
Termination: This function terminates upon a successful re-inspection of the weld area and flange.	
Parallel or sequential functions: None	
Applicable Modes: Normal operations	

Function: A.16	Place lid on canister
Detailed description: The system dispenses primary lid from lid magazine to be placed onto the canister. The primary lid consists of a flat circular plate that locates into a grooved recess machined into the canister top flange. The secondary lid is slightly larger in diameter than the primary lid and is only fitted to the canister if the primary lid weld fails inspection and cannot be repaired.	
Initiation: This function initiates upon a successful inspection of the weld area and flange.	
Termination: This function terminates once the lid has been successfully placed on the canister.	
Parallel or sequential functions: None	
Applicable Modes: Normal operations	

Function: A.17	Tack and final weld lid on canister
Detailed description: The welder must be moved to position over canister using the weld station carriage. The canister lid welder is lowered onto the canister using the canister lid welder actuator. The canister lid welder is then clamped to the canister. The canister lid welder is activated, and the lid is tack welded onto the canister. The tack welds are visually inspected before the lid welding is completed. After completion of the weld, the canister lid welder is unclamped and the weld station carriage is raised to the park position.	
Initiation: This function initiates once the primary lid has been successfully placed onto canister or the secondary lid has been successfully placed onto canister.	
Termination: This function terminates once final welding has been completed, and weld station carriage moved to park position.	
Parallel or sequential functions: None	
Applicable Modes: Normal operations	

Function: A.18	Inspect weld
Detailed description: Before inspection takes place, the operator must confirm that the inspection camera is properly positioned. The operator then visually inspects the weld integrity. The canister surface temperature is recorded. The operator confirms that all equipment is clear from canister removal path. If the canister surface temperature is correct and the HDH system is ready to accept the canister, it is transferred to the canister rinse tunnel. If the canister surface temperature is not correct or the HDH system cannot yet accept the canister, it is transferred to the buffer rack.	
Initiation: This function initiates once primary lid welding has been completed. Secondary lid welding has been completed.	
Termination: This function terminates once the canister transferred to the canister rinse tunnel or to the buffer rack.	
Parallel or sequential functions: Upon inadequate weld integrity of primary lid, the system must retrieve secondary lid to be placed onto canister.	
Applicable Modes: Normal operations	

Function: A.19	Remove defective weld
Detailed description: If the initial primary weld fails inspection then a secondary re-melt welding pass is completed. If this second weld failed inspection then two options are considered: spot repair the failed weld areas, install/weld a secondary lid.	
Initiation: This function initiates upon the failure of inspection of the primary weld.	
Termination: This function terminates upon a secondary weld failure.	
Parallel or sequential functions: None	
Applicable Modes: Normal operations	

Function: A.20	Prepare canister for secondary lid
Detailed description: The in-cave canister handling crane places the flange conditioning tool on the canister flange to rework the flange to accept a secondary lid. The weld station MSM and associated tools clean the flange after rework is complete.	
Initiation: This function initiates upon the decision to place and weld a secondary lid is made.	
Termination: This function terminates upon the complete preparation of the canister.	
Parallel or sequential functions: None	
Applicable Modes: Normal operations	

Function: A.21	Measure canister temperature
Detailed description: The canister temperature is recorded while the canister is in the weld station. The weld station MSM positions the temperature measurement instrument to measure the canister flange temperature.	
Initiation: This function initiates once canister has passed the lid weld inspection.	
Termination: This function initiates once the temperature has been recorded.	
Parallel or sequential functions: None	
Applicable Modes: Normal operations	

Function: A.22	Store canister
Detailed description: The operator moves the in-cave crane to position above the sealed canister in the selected weld station. The grapple is lowered and engaged onto the canister. The canister is then lifted to transfer height. The in-cave crane moves the canister above selected buffer rack position. The canister is lowered into the buffer rack. The grapple disengages the canister and is raised to transfer height.	
Initiation: This function initiates once the operator moves the in-cave crane above the weld station and the HDH system is not able to immediately accept filled, sealed canister.	
Termination: This function terminates once the grapple disengages the canister and is raised to transfer height	
Parallel or sequential functions: None	
Applicable Modes: Normal operations	

Function: A.23	Transfer filled canister to canister rinse bogie
Detailed description: In-cave crane is moved to position above the filled, sealed canister in selected weld station or at selected position above the buffer rack. The grapple engages the canister and is raised to transfer height. The filled canister is transferred to the canister rinse tunnel.	
Initiation: This function initiates once a predetermined canister temperature has been achieved.	
Termination: This function terminates once the filled canister is transferred to canister rinse tunnel	
Parallel or sequential functions: None	
Applicable Modes: Normal operations	

Function: B.1	Import primary canister lid
Detailed description: The primary lids are imported and stored in a lid magazine for easy retrieval during the lidding process.	
Initiation: This function initiates as primary lids are needed.	
Termination: This function terminates once the lid magazine has been re-stocked.	
Parallel or sequential functions: None	
Applicable Modes: Normal operations	

Function: B.2	Store primary canister lid in lid magazine
Detailed description: The primary lid magazine is used to store primary lids in-cave. The lid magazine is fitted with an air purge to prevent dust and other debris from collecting on the lid surface. The primary lid is then removed from the lid magazine by the lid lifter and weld station MSMs.	
Initiation: This function is initiated up retrieval of primary lids.	
Termination: This function terminates upon the successful stocking of lid magazine.	
Parallel or sequential functions: None	
Applicable Modes: Normal operations	

Function: B.3	Import secondary canister lid (as needed)
Detailed description: The secondary lid is imported on an as needed basis. In the event of the necessity for a secondary lid, the system must retrieve the secondary lid from the weld station posting port.	
Initiation: This function initiates upon the decision to place and weld a secondary lid is made.	
Termination: This function terminates once the secondary lid has been successfully imported.	
Parallel or sequential functions: Prepare canister for secondary lid	
Applicable Modes: Normal operations	

Function: C.1	Take glass sample/store in collection bottle
Detailed description: Glass shard sampling equipment is used to extract a sample glass shard for testing. Equipment includes a vacuum pick up tool, a shard sample tray and a glass sample vial. To collect glass shards, the vacuum nozzle is inserted into the top of the canister. The three-way valve is opened to allow airflow to the educator. Once vacuum is created, glass shards collect on a screen inside the nozzle. By shutting off the airflow, the glass shards are released from the screen onto the sample tray. Up to three sample vials are placed into the sample tray and the hinged funnel assembly is then placed on top of the vials. The glass shards are released from the educator nozzle into one of the funnels and drop into the sample vial below. Sample vials containing the glass samples will be placed inside a sample vial sleeve at the weld station.	
Initiation: This function initiates upon the decision to collect a glass sample.	
Termination: This function terminates once the sample vials have been placed inside the sample vial sleeve.	
Parallel or sequential functions: None	
Applicable Modes: Normal operations	

Function: C.2	Transfer collection bottle to crane decontamination area
Detailed description: The sleeve will be transferred by one of the in-cave canister handling cave cranes to the crane decontamination area.	
Initiation: This function initiates once the glass shards have been placed in the sample vial sleeve at the weld station.	
Termination: This function terminates once the sleeve has reached the crane decontamination area.	
Parallel or sequential functions: None	
Applicable Modes: Normal operations	

Function: C.3	Transfer collection bottle to shielded flask
Detailed description: The sample vial sleeve will be removed from the tray and placed inside a shielded transfer flask. The crane will place the shielded lid onto the flask. The lid bolts will be secured manually. The flask will then be normally transported to the Analytical Laboratory for analysis.	
Initiation: This function initiates once the sleeve has reached the crane decontamination area.	
Termination: This function terminates once the shielded flask is transferred to the Analytical Laboratory.	
Parallel or sequential functions: None	
Applicable Modes: Normal operations	

Function: D.1	Clean weld table area
Detailed description: The weld table must be cleaned after glass deposits have been removed from the canister. The center section of the weld station contains two recessed storage areas, one of which houses a vacuum unit and one that houses a waste basket used to collect and export solid waste.	
Initiation: This function initiates upon completion of glass deposit removal from the canister.	
Termination: This function terminates once the weld table has been cleaned.	
Parallel or sequential functions: None	
Applicable Modes: Normal operations	

Function: E.1	Import defective canister from canister rinse bogie
Detailed description: The filled canister is transferred from the canister rinse tunnel. The grapple engages the canister and is raised to transfer height. The in-cave crane moves the filled, sealed canister from the canister rinse bogie to the HPH weld station or buffer rack.	
Initiation: This function initiates upon the decision to send a canister back to the HPH system for further glass deposit removal.	
Termination: This function terminates once the filled, sealed canister has either reached the weld station or buffer rack.	
Parallel or sequential functions: None	
Applicable Modes: Failed canister inspection in HDH	

Function: E.2	Store canister
Detailed description: The operator selects the cooling rack position and moves the canister to position above the selected buffer rack using the in-cave crane. The canister is lowered into the cooling rack using the in-cave crane, and then the grapple is released and raised to transfer height.	
Initiation: This function initiates as the operator selects the canister.	
Termination: This function terminates once the canister has reached the cooling rack and the grapple has disengaged the canister and returned to transfer height.	
Parallel or sequential functions: None	
Applicable Modes: Failed canister inspection in HDH	

Function: E.3	Transfer canister to weld station
Detailed description: The operator selects canister and moves the in-cave crane above the selected cooling rack position. The grapple is lowered to engage the canister and raised to transfer height. The filled canister is moved to position above the selected weld station using the in-cave crane.	
Initiation: This function initiates once the operator selects canister to be moved.	
Termination: This function terminates once the canister reaches the weld station.	
Parallel or sequential functions: None	
Applicable Modes: Failed canister inspection in HDH	

Function: E.4	Inspect canister for exterior glass deposits
Detailed description: The filled canister is lowered into the weld station through the camera viewing range. The filled canister is then inspected for glass deposits. If the canister passes inspection, the grapple is released from the filled canister and raised to transfer height. If the filled canister fails inspection, the filled canister will remain suspended for glass removal.	
Initiation: This function initiates once the canister reaches the weld station.	
Termination: This function terminates once the canister inspection is complete	
Parallel or sequential functions: Equivalent to Function A.8	
Applicable Modes: Failed canister inspection in HDH	

Function: E.5	Remove glass deposits
Detailed description: The weld station MSMs operates the pneumatic needle descaler are used to remove solid glass deposits from the canister exterior. The in-cave crane maneuvers the canister as necessary to facilitate glass removal.	
Initiation: This function initiates once the canister does not pass inspection.	
Termination: This function terminates upon the removal of exterior glass deposits.	
Parallel or sequential functions: Equivalent to Function A.9	
Applicable Modes: Failed canister inspection in HDH	

Function: E.6	Export canister to canister rinse bogie
Detailed description: The filled canister is transferred to the canister rinse tunnel.	
Initiation: This function initiates once the canister passes inspection.	
Termination: This function terminates once the Filled canister is transferred to canister rinse tunnel	
Parallel or sequential functions: Equivalent to Function A.23	
Applicable Modes: Failed canister inspection in HDH	

Function: F.1	Decontaminate Equipment in HPH Tunnels, Maintenance Areas, and Caves
Detailed description: The DIW and the CO_2 decontamination units are supplied in the HPH rooms for decontamination of equipment prior to entry to maintenance areas. The ISA is supplied to the CO_2 decontamination units. The wastewater is collected in the room sumps and transferred to the RLD system.	
Initiation: This function initiates when decontamination of equipment is required.	
Termination: This function terminates upon completion of decontamination.	
Parallel or sequential functions: None	
Applicable Modes: Maintenance, D&D.	

Function: G.1	Facilitate remote viewing of remote operations via CCTV
Detailed description: HLW PTJ system utilizes closed circuit television cameras in the canister handling cave and at the weld station to allow remote viewing of operations and equipment.	
Initiation: This function initiates at preparation for remote operations.	
Termination: This function terminates upon completion of remote operations.	
Parallel or sequential functions: All.	
Applicable Modes: All modes.	

Function: H.1	Provide non-safety monitoring, control and communications
Detailed description: MHJ supports the monitoring and controls for all of the mechanical handling equipment in HPH. The MHJ controls the following: • Movement of canister handling cave crane • Movement of canister transfer bogie • Operation of shield hatches • Operation of recovery devices • All canister transfers • All non-safety interlocks between shield doors, hatches, bogies, and canister positions	
Initiation: This function initiates at beginning of operation of mechanical handling equipment.	
Termination: This function terminates when operation of mechanical handling equipment ends.	
Parallel or sequential functions: All.	
Applicable Modes: All modes.	

Function: I.1	Provide safety monitoring and control of Safety interlocks.
Detailed description: Support the active safety instruments and functions through the interface with the PPJ system or engineered as local safety instrumented functions.	
Initiation: This function initiates at beginning of operation of mechanical handling equipment.	
Termination: This function terminates when operation of mechanical handling equipment ends.	
Parallel or sequential functions: All.	
Applicable Modes: All modes.	

Function: J.1	**[HOLD]** Uninterruptable Power to Posting Port Safety Significant interlocks
Detailed description: The posting port interlocks are safety significant and have a connection to the uninterruptable power supply. Current design provides uninterruptible power to the posting port interlocks. For those interlocks that have a defined Safety Significant function, functionality is not required in DBA conditions that include or result in a loss of normal power; therefore the need for uninterruptible power is not supported by design requirements in the PDSA or elsewhere.	
Initiation: This function initiates during HLW facility startup.	
Termination: This function terminates after HLW facility glass production terminates.	
Parallel or sequential functions: All.	
Applicable Modes: All.	

Function: K.1	Transfer solid secondary waste to waste basket.
Detailed description: The weld table contains two storage areas, one of which houses a vacuum unit and one that houses a waste basket used to collect and export solid waste. Collect solid glass deposits from weld table cleaning using the vacuum tool. Place secondary solid waste such as welding electrodes, replacement switches and cables into the waste basket located at the weld station. The waste basket lid is placed on and secured by the HPH MSM. The lid has four tabs around its diameter that locate into cut-outs in the top of the basket. The lid incorporates a lifting bail so that it may be handled remotely by the canister handling cave cranes.	
Initiation: This function initiates when solid waste is requested to be transferred to the HSH system.	
Termination: This function terminates once the secondary solid waste has been transferred to the waste basket.	
Parallel or sequential functions: All	
Applicable Modes: All modes	

Function: K.2	Transfer solid waste basket to pour tunnel.
Detailed description: The waste basket transfer container will be placed onto the pour tunnel bogie sleeve.	
Initiation: This function initiates once solid secondary waste has been transferred to waste basket.	
Termination: This function terminates once the waste basket has reached the pour tunnel.	
Parallel or sequential functions: All	
Applicable Modes: All modes	

Function: K.3	Transport waste basket to export position.
Detailed description: Once the waste basket transfer container has reached the export position via the pour tunnel bogie, the MSMs will be used to rotate the lifting bail to remove the waste basket. The bogie will then return to the canister cooling position.	
Initiation: This function initiates when the waste basked has reached the pour tunnel.	
Termination: This function terminates when transfer of solid waste is complete.	
Parallel or sequential functions: All	
Applicable Modes: All modes	

Function: L.1	Perform Recovery Operations
Detailed description: Mechanical Handling equipment will be utilized to perform recovery and/or lifecycle maintenance of canister handling cave equipment or components.	
Initiation: This function initiates when necessary for maintenance of remotable equipment.	
Termination: This function terminates when maintenance of applicable remotable equipment is complete.	
Parallel or sequential functions: None	
Applicable Modes: Maintenance	

Function: M.1	Provide lifecycle maintenance
Detailed description: The system accesses all in-cave remotable equipment remotely for maintenance purposes and provides a crane maintenance area (CMA) is provided for hands-on maintenance.	
Initiation: This function initiates when necessary for maintenance of remotable equipment.	
Termination: This function terminates when maintenance of applicable remotable equipment is complete.	
Parallel or sequential functions: None	
Applicable Modes: Maintenance	

Function: M.2	Provide for equipment retrieval
Detailed description: The system provides the ability to retrieve all in-cave remotable equipment. Failed equipment is retrieved to a maintenance area.	
Initiation: This function initiates when necessary for retrieval of remotable equipment.	
Termination: This function terminates when retrieval of applicable remotable equipment is complete.	
Parallel or sequential functions: None	
Applicable Modes: Maintenance	

Appendix C Active Safety Instruments and Functions

The listed instruments are designated as having active safety functions, implemented through interface with and programming in the PPJ system. Information in the table below reflects the current design of active safety instruments, including functions, and safety designations per the MHDs and associated equipment and instrument lists. In some cases the current safety classification of the SSCs in design is known to exceed the design requirements. The information will be updated as needed to reflect changes to the design. The information below is provided in support of Plant Engineering and Operations and does not represent design requirements.

Function Title	Safety Designation	Sensors	Final Control Elements	Functional Description
Canister Handling Cave Posting Port Gamma Monitor Interlock	SS	HPH-RS-3701 HPH-RS-3801 HPH-ZS-3904 HPH-ZS-3905	TBD	If the outcave doors are not closed and the gamma monitor reads high, the interlock will trip and isolate power to the out-cave shield doors to prevent opening and exposing the facility worker to high radiation sources.
Canister Handling Cave Posting Port Door-to-Door Interlock	SS	HPH-ZS-3904 HPH-ZS-3905 HPH-ZS-3909 HPH-ZS-3910	TBD	If an attempt is made to open the out-cave doors while the incave doors are not locked or the outcave doors are not closed and an attempt is made to unlock the incave doors, this interlock isolates power to both doors to prevent the opening of both doors simultaneously and possible exposure of the facility worker to high radiation sources.
Bogie interlocks for IHLW Canister cooling HPH-TRLY-00001	SS	HPH-IT-1509	HPH-JY-1510	Interlocks prevent loaded pour tunnel bogies from traveling south to the pour tunnel hatches until the filled IHLW canister has cooled.
Bogie interlocks for IHLW Canister cooling HPH-TRLY-00004	SS	HPH-IT-1607	HPH-JY-1608	Interlocks prevent loaded pour tunnel bogies from traveling south to the pour tunnel hatches until the filled IHLW canister has cooled.

Bogie interlocks for IHLW Canister cooling HPH-TRLY-00010	SS	HPH-IT-6008	HPH-JY-6009	Interlocks prevent loaded pour tunnel bogies from traveling south to the pour tunnel hatches until the filled IHLW canister has cooled.
Bogie interlocks for IHLW Canister cooling HPH-TRLY-00011	SS	HPH-IT-6307	HPH-JY-6308	Interlocks prevent loaded pour tunnel bogies from traveling south to the pour tunnel hatches until the filled IHLW canister has cooled.

Appendix D System Procedures

Reserved

Appendix E System History

Reserved

Issued by
RPP-WTP PDC

HLW Melter Cave Support Handling (HSH) System Design Description

Document title:

Document number: 24590-HLW-3ZD-HSH-00001

Revision number: 0

Type: ☑ System Design Description
☐ Facility Design Description

Originator(s): R. Schreiner & W. Boehnke

Checked by: Neil Darwen

Checker's signature: _____ (Signature) 5/21/15 (Date)

Concurrence: Mark Johnson

Concurrence signature: SEAN SMITH FOR M. JOHNSON (Manager of Production Engineering Signature) 6/24/15 (Date)

Concurrence: Ian Milgate

Concurrence signature: _____ (Project Technical Director and Design Authority Signature) 6/26/15 (Date)

Approved by: Natalie Harkey for

Approver's position: Systems Engineering Manager

Approver's signature: P. Townsend _____ (Signature) 6-26-15 (Date)

Validation – signatures below indicate acceptance of the requirements established in Section 3 as the complete and correct set of requirements for this system relative to the requirement sources for which the Requirement Developer is responsible.

Appl.	Requirement Area	Requirement Developer	Signature	Date
☐	Architectural Design			
☐	Civil/Structural Design			
☑	Controls & Instrumentation Design	Wayne Underhill	Email 2/20/15 & Email	4/25/15
☑	Commissioning	Ross Hamlett/David Painter	Email 2/20/15	
☑	Electrical Design & AHJ	Gary Lucke		2/20/15
☐	Fire Protection Systems Design			
☑	Fire Protection Engineering	Ben Johnson		3/24/15
☑	HVAC Design	Julian Leam		02.23.15
☑	Mechanical Handling Design	Julian Leam		02.23.15
☑	Mechanical Systems Design	Julian Leam		02.23.15
☑	Plant Design	Travis Vincent		2/26/15
☑	Process Engineering	Bob Voke		3/12/15
☐	Interface (External)			
☐	Interface (Internal)			
☒	System Functions and Requirements	Phil Townsend		3/24/15
☑	Equipment Environmental Qualification	Govind Rajagopal	G. Rajagopal	2-20-15
☑	Equipment Seismic Qualification	Mahmood Habibi		2-24-15
☑	Materials Engineering / Technology	~~Tom Engelman~~ Grant Maw		4/29/15 4/14/15
☐	Plant Software Design			
☑	Reliability, Availability, Maintainability, Inspectability (Plant Engr)	Marshall Miller		3/16/15
☑	Environmental Permitting (ESH)	~~Bret Peck~~ Barry Cusic		3/18/15
☐	Fire Safety (ESH)			
☑	Nuclear Safety Engineering	~~Mark Enghusen~~ Scott Marx	~~Email 2/20/15~~	4/14/15
☐	Criticality Safety			
☑	Radiological Engineering	Kyle Peltier	Email 2/19/15	
☐	Industrial Safety/Hygiene (ESH)			
☐	Mission (WTP Contract functional/performance rqmts)			
☑	Operations, Maintenance, Human Factors	Dan Rovira	Email 2/19/15	
☑	Quality Assurance	Greg Butt/Virginia Creaney	Gregory L. Butt	2/20/15
☐	Safeguards & Security			
☐	Startup			
☐	Transportation & Logistics			

* Validation not required for alpha/preliminary design description documents.

History Sheet

Rev	Reason for revision	Revised by
0	Initial issue. The SDD supersedes 24590-HLW-3YD-HSH-00001, Rev. 3, *System Description for the System HSH – HLW Melter Cave Support Handling*	R. Schreiner/W. Boehnke

Contents

1 Introduction 1
1.1 System Identification 1
1.2 Limitations and Scope 1
1.3 Ownership and Maintenance 2
1.4 Definitions/Glossary 2
1.5 Acronyms and System Designators 3
1.5.1 Acronyms 3
1.5.2 System Designators 4
2 General Overview 5
2.1 System Functions/Safety Functions 10
2.2 System Classification 27
2.3 Basic Operational Overview 27
3 Requirements 29
3.1 Requirements 29
3.2 Bases 29
3.3 References 30
3.4 General Requirements 30
3.4.1 Mission and Functional / Performance Requirements (Including States/Modes) 30
3.4.2 Nuclear Safety, ALARA, Environmental and Other Regulatory Requirements 39
3.4.3 System Interface Requirements 44
3.4.4 Other Technical, Specialty, Operations and Maintenance Requirements 46
3.5 Cranes, Power Manipulator Crane and Cable Reels 51
3.5.1 Mission and Functional / Performance Requirements (Including States/Modes) 51
3.5.2 Nuclear Safety, ALARA, Environmental and Other Regulatory Requirements 55
3.5.3 System Interface Requirements 56
3.5.4 Other Technical, Specialty, Operations and Maintenance Requirements 56
3.6 HSH Decontamination Tank and Associated piping 60
3.6.1 Mission and Functional / Performance Requirements (Including States/Modes) 60
3.6.2 Nuclear Safety, ALARA, Environmental and Other Regulatory Requirements 63
3.6.3 System Interface Requirements 64
3.6.4 Other Technical, Specialty, Operations and Maintenance Requirements 66
3.7 Posting Port and Glovebox 67
3.7.1 Mission and Functional / Performance Requirements (Including States/Modes) 67
3.7.2 Nuclear Safety, ALARA, Environmental and Other Regulatory Requirements 69
3.7.3 System Interface Requirements 69
3.7.4 Other Technical, Specialty, Operations and Maintenance Requirements 69
3.8 Below the Hook Lifting Apparatus and Tools 70
3.8.1 Mission and Functional / Performance Requirements (Including States/Modes) 70
3.8.2 Nuclear Safety, ALARA, Environmental and Other Regulatory Requirements 71
3.8.3 System Interface Requirements 71
3.8.4 Other Technical, Specialty, Operations and Maintenance Requirements 71

3.9 Manipulators (Master Slave & Powered) 72
3.9.1 Mission and Functional / Performance Requirements (Including States/Modes) 72
3.9.2 Nuclear Safety, ALARA, Environmental and Other Regulatory Requirements 73
3.9.3 System Interface Requirements 73
3.9.4 Other Technical, Specialty, Operations and Maintenance Requirements 73

3.10 Shield Doors, Lids and Shield Windows 73
3.10.1 Mission and Functional / Performance Requirements (Including States/Modes) 73
3.10.2 Nuclear Safety, ALARA, Environmental and Other Regulatory Requirements 76
3.10.3 System Interface Requirements 77
3.10.4 Other Technical, Specialty, Operations and Maintenance Requirements 77

3.11 Central Vacuum System 79
3.11.1 Mission and Functional / Performance Requirements (Including States/Modes) 79
3.11.2 Nuclear Safety, ALARA, Environmental and Other Regulatory Requirements 80
3.11.3 System Interface Requirements 80
3.11.4 Other Technical, Specialty, Operations and Maintenance Requirements 80

3.12 Transfer Cart System 81
3.12.1 Mission and Functional / Performance Requirements (Including States/Modes) 81
3.12.2 Nuclear Safety, ALARA, Environmental and Other Regulatory Requirements 83
3.12.3 System Interface Requirements 83
3.12.4 Other Technical, Specialty, Operations and Maintenance Requirements 83

3.13 Monitoring & Controls Requirements 83
3.13.1 Mission and Functional / Performance Requirements (Including States/Modes) 83
3.13.2 Nuclear Safety, ALARA, Environmental and Other Regulatory Requirements 87
3.13.3 System Interface Requirements 89
3.13.4 Other Technical, Specialty, Operations and Maintenance Requirements 91

3.14 Other SSC Requirements 92
3.14.1 Mission and Functional / Performance Requirements (Including States/Modes) 92
3.14.2 Nuclear Safety, ALARA, Environmental and Other Regulatory Requirements 93
3.14.3 System Interface Requirements 93
3.14.4 Other Technical, Specialty, Operations and Maintenance Requirements 93

3.15 Relevant Codes and Standards 93
3.15.1 Codes of Record 93
3.15.2 WTP Standards, Design Criteria and (General) Specifications 95

4 System Description 97

4.1 Configuration Information 97
4.1.1 Description of System, Subsystems, and Major Components 98
4.1.2 Boundaries and Interfaces 209
4.1.3 Physical Layout and Location 211
4.1.4 Principles of Operation 217
4.1.5 System Reliability Features 218
4.1.6 System Control Features 218

4.2 Operations 222
4.2.1 Initial Configuration (Pre-startup) 223
4.2.2 System Startup 223
4.2.3 Normal Operations 223
4.2.4 Off-Normal Operations 232
4.2.5 System Shutdown 240
4.2.6 Safety Management Programs and Administrative Controls 240

4.3 Testing and Maintenance 240

4.3.1 Reserved Temporary Configurations 240
4.3.2 Reserved TSR-Required Surveillances 240
4.3.3 Reserved Non-TSR Inspections and Testing 240
4.3.4 Reserved Maintenance 240
4.4 Supplemental Information 246
5 References and Design Documents List 247
5.1.1 Source / Basis References 247
5.1.2 Other References 247
5.1.3 System Design Documents 248

Appendices

Appendix A Test Objectives, Conditions, and Acceptance Criteria A-1
Appendix B Descriptions of System Functional Flow and Interactions B-1
Appendix C Active Safety Instruments and Functions C-1
Appendix D System Procedures D-1
Appendix E System History E-1

Tables

Table 2-1 - Functional Analysis & Crosswalk to Requirements 17
Table 3-1 - Mechanical Equipment 30
Table 3-2 - HSH Seismic Design Categories 32
Table 3-3 – HSH Safety Designations 40
Table 3-4 - HSH System Interfaces 44
Table 3-5- Remotely Recoverable, Maintainable or Replaceable Equipment and Components 47
Table 3-6 - In-Cave Components for Remote Operations/Maintenance/Replacement by HSH Equipment 48
Table 3-7 - Crane Capacity 52
Table 3-8 – Safety Classification of the Interlocks 87
Table 3-9 – HSH Applicable Codes & Standards 93
Table 3-10 – WTP Design Criteria, Guides, and General Specifications Applicable to HSH 95
Table 4-1 – System HSH Interfaces 209
Table 4-2 – Packaged Equipment Local Controls 219
Table 4-3 – Trips and Interlocks 221
Table 4-4 – Operations Manuals 223

Table 4-5 – Maintenance Manuals 243

Figures

Figure 2-1 - HSH Context Diagram 6
Figure 2-2 - System HSH Plan View at Elev. 37 ft 7
Figure 2-3 - Potential Melter Cave Export Routes 8
Figure 2-4 - Potential Equipment & Consumable Import Routes 9
Figure 2-5 - HSH Functional Block Diagram (Remove/Replace Melter or Vessels) 11
Figure 2-6 - HSH Functional Block Diagram (Melter & Vessel Maintenance) 12
Figure 2-7 – HSH Functional Block Diagram (ADS Pump & Agitator Maintenance) 13
Figure 2-8 - HSH Functional Block Diagram (Manipulator Maintenance) 14
Figure 2-9 - HSH Functional Block Diagram (Remove/Replace Shield Window, Size Reduction Equip., Light Bulbs, Cameras) 15
Figure 2-10 – HSH Functional Block Diagram (Other Support Functions) 16
Figure 4-1 – System HSH Section View Looking East 99
Figure 4-2 – System HSH Section View Looking West 104
Figure 4-3 – System HSH CMA Section Views North and South 108
Figure 4-4 – System HSH CDA Section Views North and South 110
Figure 4-5 – System HSH Plan View at Elevation +37 FT 112
Figure 4-6 – System HSH MC Section View North 114
Figure 4-7 – Overhead Main 25 Ton Crane 118
Figure 4-8 – Overhead Power Manipulator Crane 121
Figure 4-9 – Breakdown Area Hoist 123
Figure 4-10 – Decontamination Area Crane 124
Figure 4-11 – Maintenance Area Crane 125
Figure 4-12 – Maintenance Area Jib Crane 127
Figure 4-13 – Melter Cave Lifting Beams and Storage Rack 129
Figure 4-14 – Discharge Chamber Lid Lifting Beam 130
Figure 4-15 – Decontamination Area Lifting Beam and Storage Rack 131
Figure 4-16 - Posting Port and Glovebox 133
Figure 4-17 – Crane Vertical Shield Doors 135
Figure 4-18 – Crane Horizontal Shield Doors 136
Figure 4-19 – Decontamination Pit Shield Lids 137

Figure 4-20 – Shielded Personnel Access Door (SPAD) 140
Figure 4-21 – Hydraulic Power Manipulator (HPM) 141
Figure 4-22 – Master Slave Manipulator (MSM) 143
Figure 4-23 – Horizontal Shield Door Recovery Plug 145
Figure 4-24 – Plasma Torch Pass Through Port 146
Figure 4-25 – Waste Transfer Port 147
Figure 4-26 – Pour Tunnel Cover Plates 149
Figure 4-27 – False Floor Panels Arrangement 152
Figure 4-28 –Tool Storage Table 153
Figure 4-29 – Consumable Templates 154
Figure 4-30 – False Floor Panels Structural Frame 156
Figure 4-31 – Consumable Storage Bucket 158
Figure 4-32 – Melter Import Winch Switch Assembly 159
Figure 4-33 – Melter Bus Import Hanger 161
Figure 4-34 – Melter Discharge Chamber Heaters Cable Tray 163
Figure 4-35 – Melter Bus Plug Jack 164
Figure 4-36 – Vessel Transfer Cart 166
Figure 4-37 – Vessel Set Down Pads 167
Figure 4-38 – Melter Lid Handling Equipment 168
Figure 4-39 – Central Vacuum System Network (Typical) 170
Figure 4-40 – Central Vacuum System Skid 171
Figure 4-41 – Shuttle Cart Arrangement 173
Figure 4-42 – Equipment Stand 175
Figure 4-43 – Decontamination Area Catch Pan 176
Figure 4-44 – Maintenance Templates and Storage Rack 178
Figure 4-45 – Decontamination Templates and Storage Rack 179
Figure 4-46 – Decontamination Tank 182
Figure 4-47 – Decontamination Turntable 184
Figure 4-48 – Decontamination Area Small Item Shelves 185
Figure 4-49 – Parts Washer 186
Figure 4-50 – Crane Decontamination Equipment 187
Figure 4-51 – Decontamination Spray Lance 188
Figure 4-52 – Fixed Shear 191

Figure 4-53 – Solid Waste Basket....192
Figure 4-54 – Waste Basket Stand....193
Figure 4-55 – Breakdown Table....195
Figure 4-56 – Large Impact Wrench and Stand....197
Figure 4-57 – Hydraulic Power Unit....203
Figure 4-58 – Horizontal Shield Door Recovery Drive....204
Figure 4-59 – Shield Window Protection Barrier....205
Figure 4-60 – Canister Grapple....207
Figure 4-61 – Flex Jumper Pull Back Tool....208
Figure 4-62 – HLW Key Plan....211
Figure 4-63 – System HSH Operating Rooms and Platforms....215
Figure 4-64 – System HSH Plan View at Elevation +37 FT....216
Figure 4-65 – System HSH Partial Plan View at Elevation +68 FT....217
Figure 4-66 – Horizontal Door Recovery Equipment....233
Figure 4-67 – Proposed Vertical Shield Door Recovery Equipment....235
Figure 4-68 – HPM Slave Arm Lift Beam....236
Figure 4-69 – HPM Slave Arm Handling Cradle....237
Figure 4-70 – MSM Removal Cart....238

1 Introduction

1.1 System Identification

This System Design Description (SDD) defines the technical and functional/performance requirements of the High-Level Waste (HLW) Melter Cave Support Handling (HSH) system. This document details the waste treatment requirements, environmental compliance requirements, and authorization basis requirements of the HSH system. This SDD describes the process/functional requirements of the HSH system, including:

- Services and utility requirements, operating materials and supplies, and other external interfaces
- Operations limits and design bases
- Other criteria and requirements pertinent to the design of the HSH system, exclusive of internal systems

The boundaries, system interfaces and functional description of the HSH system is provided in Section 2.

1.2 Limitations and Scope

The scope of this document is to provide an authoritative source for the collected set of requirements applicable to the HSH system, inclusive of interface requirements with other systems. The SDD scope is limited to HSH system features that support operations and protect equipment, personnel, and the environment. The SDD is prepared in accordance with 24590-WTP-G04B-00093, *System and Facility Design Descriptions.* The intended use of these collected requirements is to establish the following:

- Inform the HSH system design effort
- Provide a validated basis upon which to confirm implementation of requirements in design
- Provide the expected means of verification for requirements, including those that are post-construction (i.e., startup and commissioning test objectives and acceptance criteria)

Design requirements for the IHLW Canister Grapple are provided in 24590-HLW-3ZD-HRH-00001, *HLW Canister Receipt Handling (HRH) System Design Description.*

All requirements established in this document are verified to be implemented in design and/or physical configuration using a graded approach commensurate with importance and risk.

Where numeric values are provided within requirements in Section 3, these values are provided without additional margin. For example if a value is established in the Basis of Design, no attempt is made to remove any margin that may or may not have gone into the establishment of that value, neither has any margin been added. Where values are stated as minimums or maximums, there is no expectation that any additional margin be applied in the verifications that the design requirements have been met. Testing that is required to be performed in accordance with external codes and standards must follow the rules established in those documents.

This document is intended to be used in support of design development, design verification, turnover, startup testing, and commissioning activities. This document will be maintained current relative to changes in source requirements documents. Updates shall be made concurrent with these changes to source requirements, or implementation shall be tracked for completion in accordance with 24590-WTP-GPG-ENG-0170, *Impact Evaluation*.

Engineers are expected to be able to use the requirements in section 3 of this document as input for design development without recourse to the upper-tier source documents or searches of the Design Criteria Database (Technical Requirements Management System). Design engineers are still required to ensure that requirements contained with the discipline/functional standards incorporated by reference in section 3 are followed. These documents contain additional criteria that are based on applications of external codes/standards, corporate best practices, and engineering management expectations for a consistent approach to design.

Certain requirement statements in this document are preceded by a "**[HOLD]**" notation. This notation is used when there are unresolved technical issues, known inconsistencies among source requirements, or other management suspensions of work requiring resolution. Requirements with the "**[HOLD]**" notation may be used to proceed with preliminary or committed design but shall not be used in support of fabrication or construction until the "**[HOLD]**" is removed.

The contents of Section 4 are being developed in a phased approach in support of future operations and maintenance. At this revision, only the contents of Sections 4.1.1 through 4.1.4 and 4.1.6 have been updated and verified. Sections 4.1.5, 4.2, 4.3 and 4.4 are currently reserved and will be updated in a later phase after the work to support completion of these sections has been completed.

1.3 Ownership and Maintenance

The Design Authority (DA) organization is responsible for the preparation and maintenance of this document through turnover of the included systems to Operations. Thereafter, maintenance of this document is the responsibility of the Plant Engineering organization; however, the Engineering DA organization retains responsibility for the establishment and definition of design requirements.

1.4 Definitions/Glossary

B-25 Waste Box. A standard carbon steel waste container with typical dimensions of 4 ft x 4 ft x 6 ft.

Confinement. For consistency, regardless of usage elsewhere, confinement is used in this document to denote the controls used to prevent or minimize the release or migration of airborne contaminants, including aerosols, hazardous vapors, or gases.

Containment. For consistency, regardless of usage elsewhere, containment is used in this document to denote the controls used to prevent or minimize the release or migration of liquid or liquid-entrained contaminants.

Primary confinement / containment. The structures, systems, or components (SSCs) and their associated boundaries that confine or contain airborne and liquid contaminants under normal conditions.

Secondary confinement / containment. The structures or other design features that capture and prevent further spread or migration of airborne or liquid contaminants after they have escaped primary confinement or containment.

1.5 Acronyms and System Designators

1.5.1 Acronyms

ADS	air displacement slurry
ALARA	as low as reasonably achievable
ASLB	adjustable span lifting beam
ASME	American Society of Mechanical Engineers
ASTM	American Society for Testing and Materials
BNI	Bechtel National, Inc.
BOD	Basis of Design
CCN	correspondence control number
CCR	crane control room
CCTV	closed circuit television cameras
CDA	crane decontamination area
CFR	Code of Federal Regulations
CM	commercial
CMA	crane maintenance area
CMAA	Crane Manufacturers Association of America, Inc.
CTN	component tag number
D&D	decontamination and decommissioning
DA	design authority
DBE	design basis event
DIW	demineralized water (system)
DOE	US Department of Energy
DOT	US Department of Transportation
DVR	design verification report
E&NS	Environmental and Nuclear Safety
EDP	equipment decontamination pit
EMA	equipment maintenance area
ENG	Engineering
EQP	equipment qualification package
FCR	facility control room
HLW	High-Level Waste (Facility)
HPM	hydraulic powered manipulator
HPU	hydraulic power unit
ICN	integrated control network
IHLW	immobilized high-level waste
JCDPI	justification for continued design, procurement, and installation
LAW	Low Activity Waste
LOI	local operator interface
MAP	melter assembly pad
MCC	motor control center
MCR	main control room
MFD	mechanical flow diagram

MR	material requisition
MSD	mechanical sequence diagram
MSM	master slave manipulator
NDE	non-destructive examination
NEMA	National Electrical Manufacturers Association
NFPA	National Fire Protection Association
NPH	natural phenomena hazard
O&M	Operations and Maintenance
ORD	Operations Requirements Document
P&ID	piping and instrumentation diagram
PAM	post-accident monitoring
PDSA	preliminary documented safety analysis
PT	Pretreatment (Facility)
RCRA	Resource Conservation and Recovery Act
R&T	Research and Technology
ROIN	requirement object identification number
SC	safety class
SDD	system design description
SPAD	shielded personnel access door
SRD	Safety Requirements Document
SS	safety significant
SSC	structures, systems, or components
WAI	waste acceptance impacting
WTP	Hanford Tank Waste Treatment and Immobilization Plant

1.5.2 System Designators

BSA	breathing service air system
C5V	C5 ventilation system
DIW	demineralized water system
FPW	fire protection water
HFH	high-level waste filter cave handling system
HFP	high-level waste melter feed process system
HMH	high-level waste melter handling system
HMP	high-level waste melter process system
HOP	high-level waste melter offgas processing system
HPH	high-level waste canister pour handling system
HPS	high pressure steam system
HSH	high-level waste melter cave support handling system
HRH	high-level waste canister receipt handling system
ISA	instrument service air system
LTE	lighting electrical system
LVE	low voltage electrical (480/208/120 V) system
MHJ	mechanical handling control system
PCJ	process control system
PPJ	programmable protection system
PTJ	process & mechanical handling CCTV system
PVV	process vessel vent exhaust system
PWD	plant wash and disposal system

RLD	radioactive liquid waste disposal system
RWH	radioactive solid waste handling system

2 General Overview

The HLW melter cave support handling system (HSH) enables remote maintenance and recovery of all remotely handled equipment located within the HLW melter caves 1 and 2, which are alike. The mechanical handling in-cave operations are performed remotely using a combination of cranes and manipulators with appropriate tooling, shield windows, and closed circuit television cameras (CCTVs).

The equipment layout is similar for both melter caves 1 and 2, decontamination and crane maintenance areas, and associated airlocks of the HMH system. The melter caves are serviced by power manipulator cranes (HSH-MANIP-00010 and HSH-MANIP-00023 for caves 1 and 2, respectively) and 25-ton main cranes (HSH-CRN-00001 and HSH-CRN-00014 for caves 1 and 2, respectively). The cranes are used to install and remove heavy equipment, such as agitators or pumps.

Figure 2-1 provides a contextual depiction of the HSH system in terms of the primary interrelationships with other systems and utilities. This diagram does not differentiate among some utilities that have both normal and safety service provisions. This diagram is used in support of functional and performance definition at the system level. See Section 1.5.2 for the list of relevant system designators.

Figure 2-1 - HSH Context Diagram

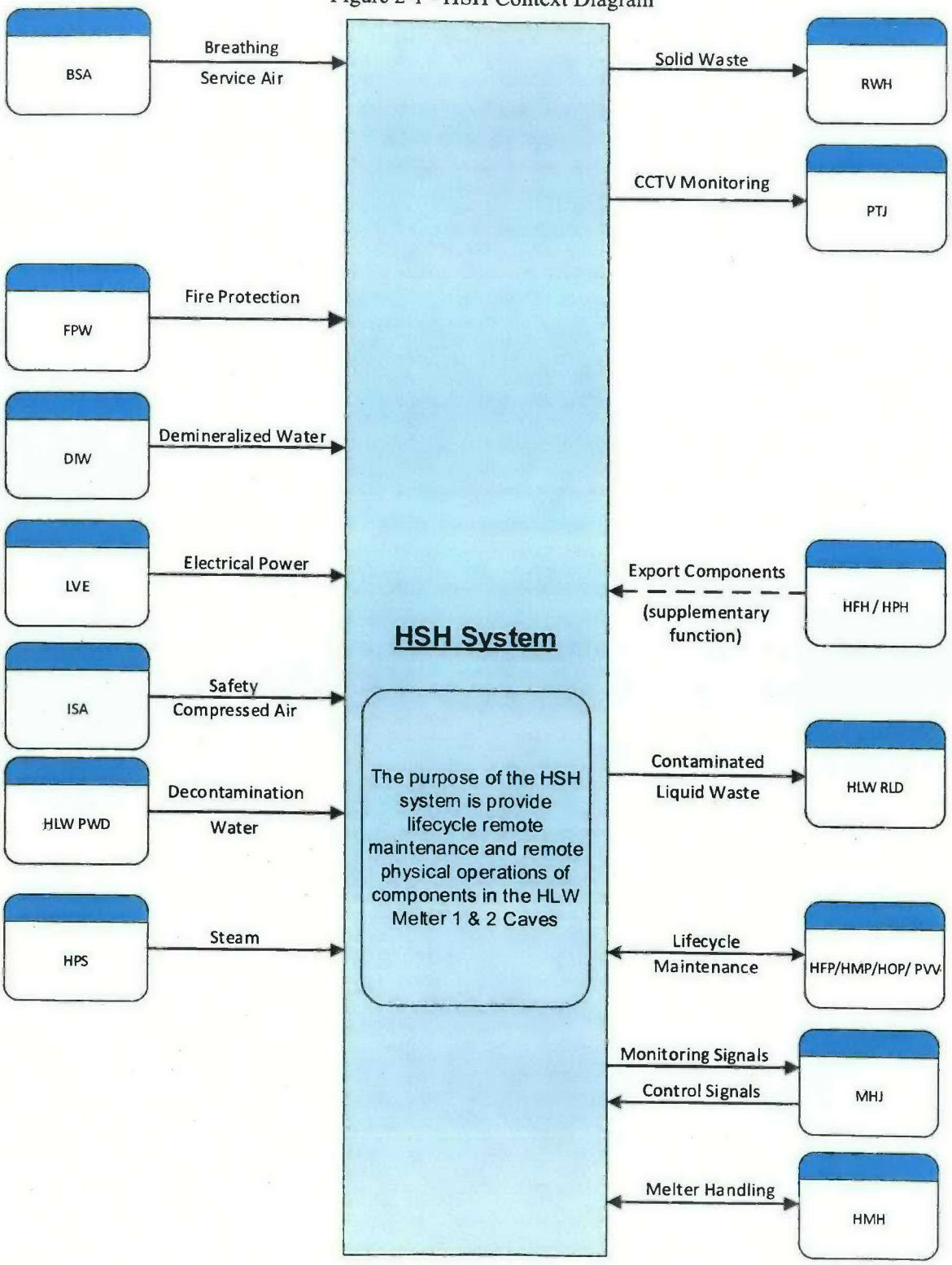

Figure 2-2 - System HSH Plan View at Elev. 37 ft

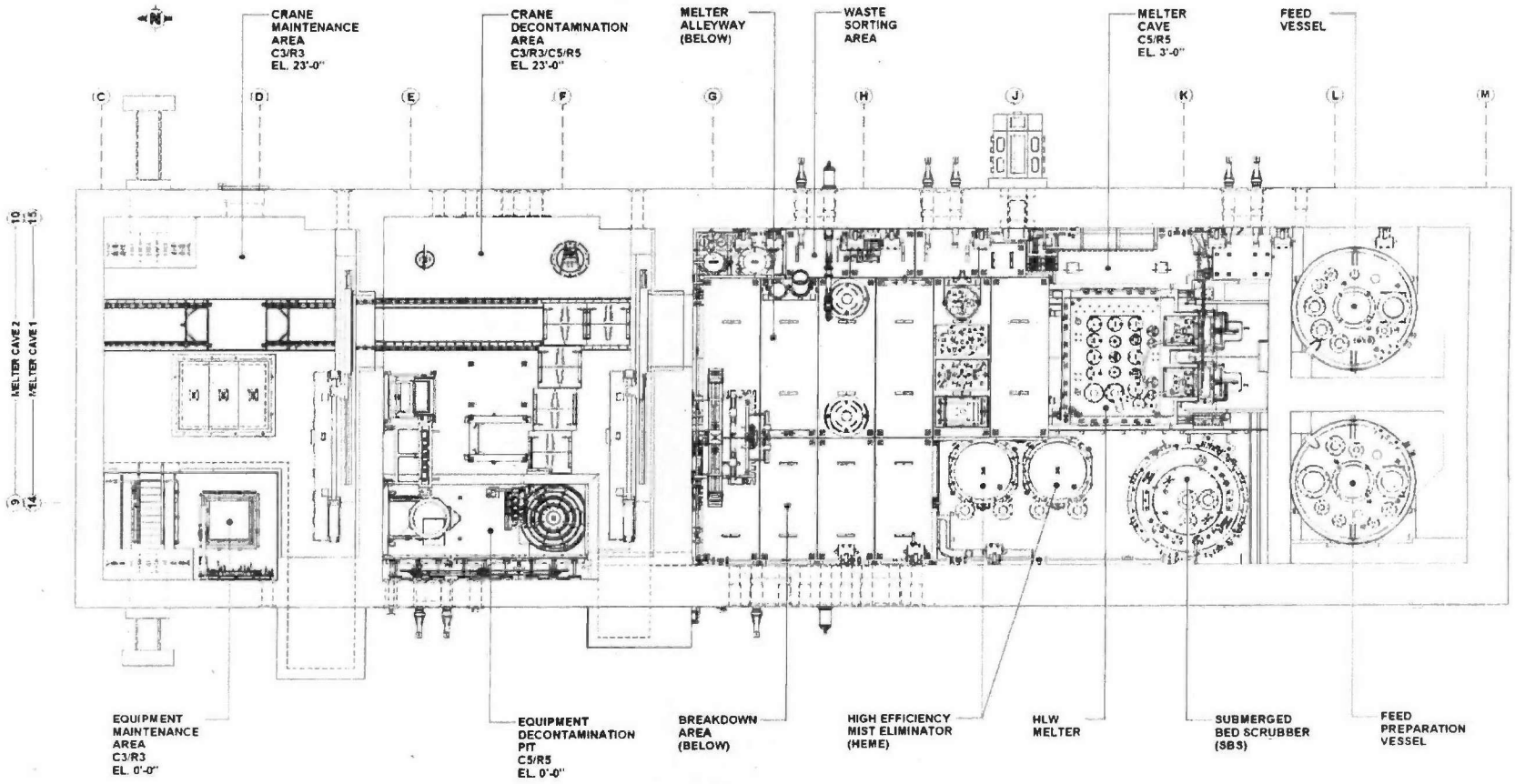

Figure 2-3 - Potential Melter Cave Export Routes

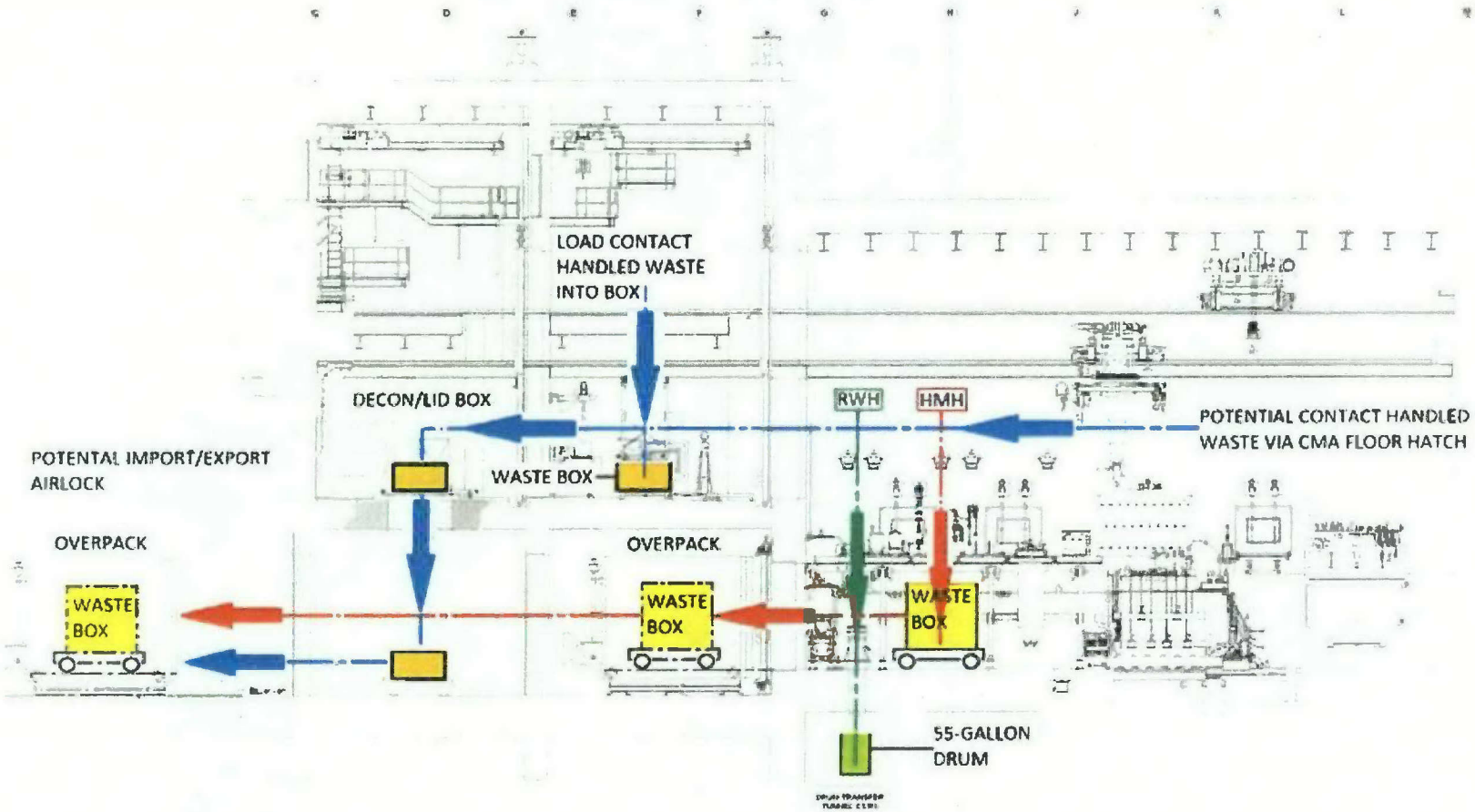

Figure 2-4 - Potential Equipment & Consumable Import Routes

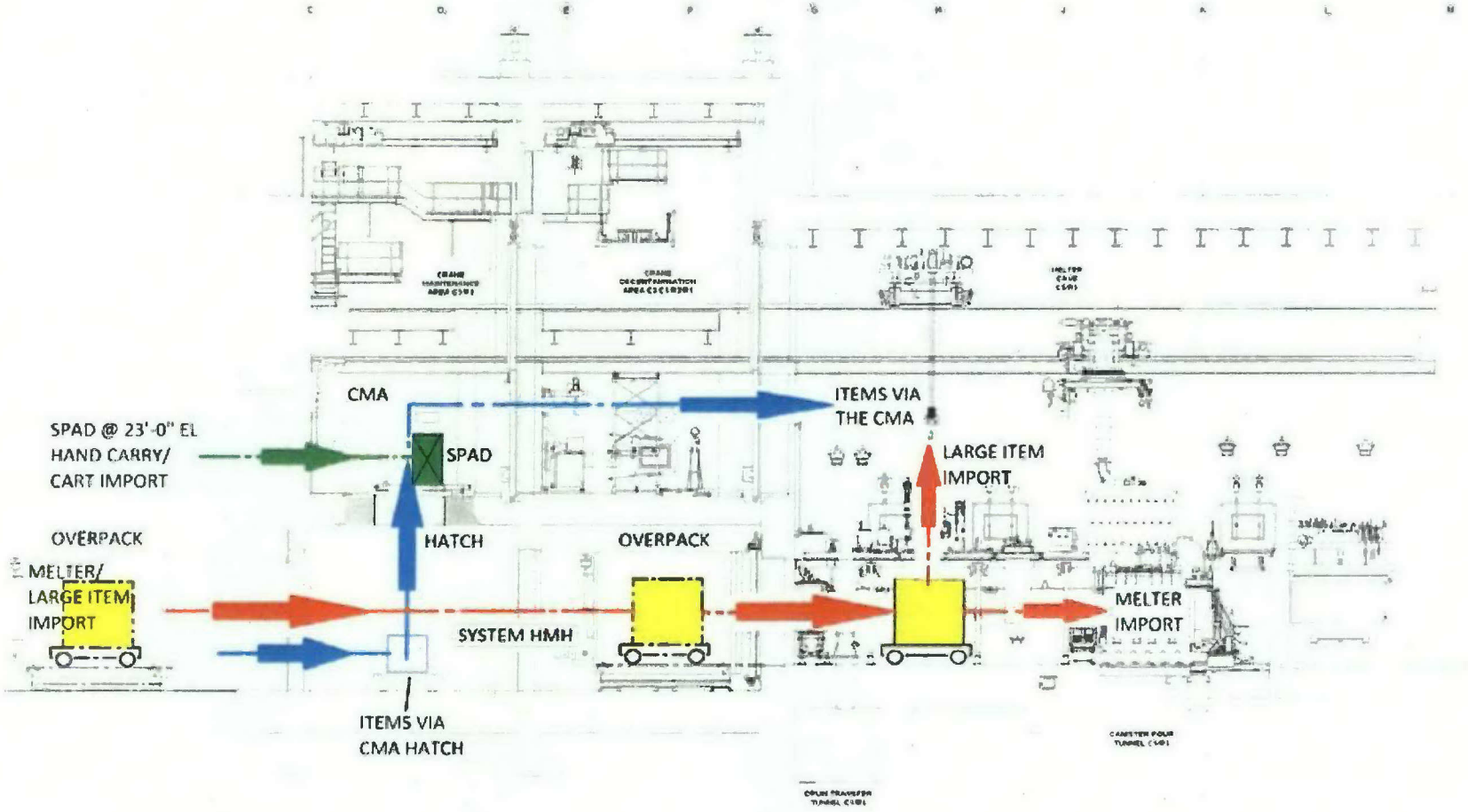

2.1 System Functions/Safety Functions

This section defines the HSH functions and attributes that need to be addressed by the system design.

The primary functions performed by the HSH system are the following:

- Remove/Replace HLW Melter: The system remotely removes the spent HLW melter and installs the replacement. The system receives the replacement melter into the melter cave area assisted by the HMH system.
- Remove/Replace Vessels: The system is capable of remotely removing and replacing the melter feed preparation vessel, feed vessel, submerged bed scrubber (SBS) or the high-efficiency mist eliminator (HEME). The system receives the replacement vessel into the melter cave area assisted by the HMH system.
- Receive Components: The system receives replacement components into the crane maintenance area or the posting port glovebox.
- Maintain Equipment: The system accesses all in-cave remotable equipment remotely for maintenance purposes and provides an equipment maintenance area within the crane maintenance and decontamination areas for hands-on maintenance.
- Transfer Components: The system transfers replacement components from the crane maintenance area through the crane decontamination area and into the melter cave, or from the posting port directly into the melter cave.
- Disassemble Waste: The system uses crane- or manipulator-operated tools to disassemble or size-reduce waste remotely prior to packaging and export from the melter cave. There is an area for size reducing with equipment such as, a powered saw, hydraulic shear, or plasma torch to size reduce waste prior to package and export from the melter cave.
- Transfer Waste: The system transfers packaged waste remotely to the HLW radioactive solid waste handling system (RWH) through the waste transfer port. Secondary waste may also be transferred to the crane decontamination or maintenance area for packaging in waste boxes or in some cases to the melter handling area (HMH). The system also receives waste generated in the canister handling cave.

The safety functions performed by the HSH system are the active functions of the melter cave posting port gamma monitor and door-to-door interlocks and the passive functions of shielding and containment during the functions depicted by Figures 2-5 through Figure 2-10.

Figure 2-5 through Figure 2-10 depict the functional block diagrams for the HSH system, indicating the internal and external systems and utilities that provide the primary support or interface for that function. Section 3 provides the design and performance design requirements to meet both functional and other requirements.

System interfaces are provided for reference only. Except where a level of interface with other system needs to be defined, no attempt is made in this document to define functions, performance, or design requirements for interfacing systems. See Section 1.5.2 for the list of relevant system designators.

Figure 2-5 - HSH Functional Block Diagram (Remove/Replace Melter or Vessels)

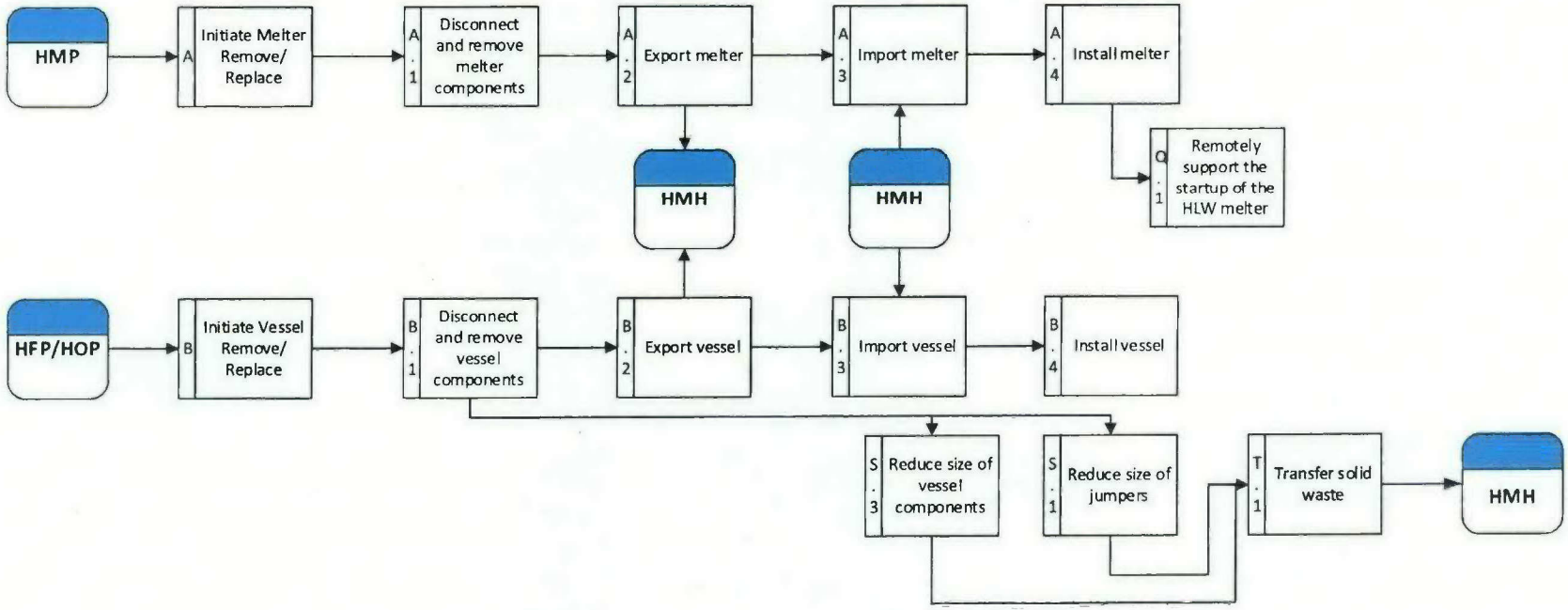

Figure 2-6 - HSH Functional Block Diagram (Melter & Vessel Maintenance)

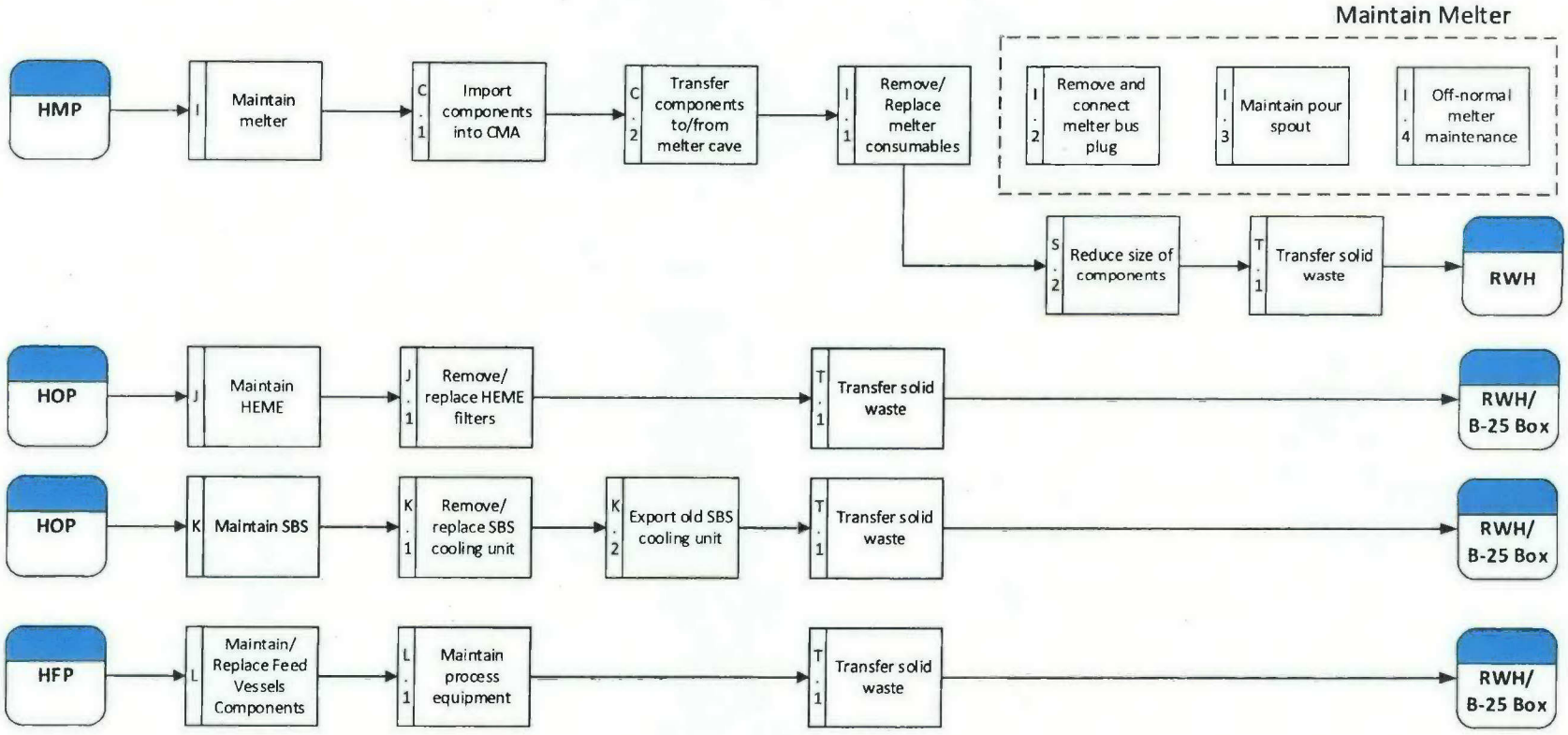

Figure 2-7 – HSH Functional Block Diagram (ADS Pump & Agitator Maintenance)

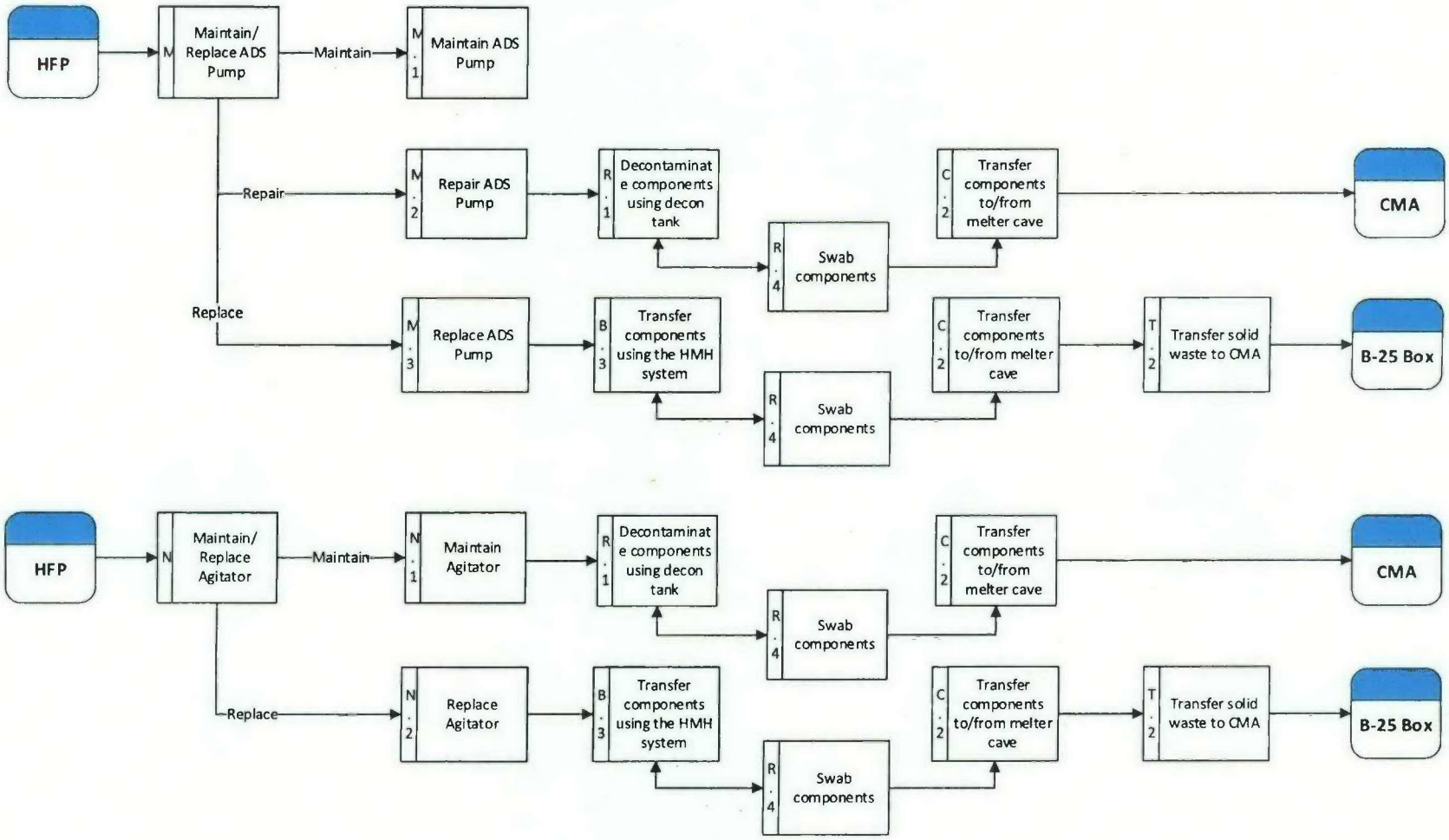

Figure 2-8 - HSH Functional Block Diagram (Manipulator Maintenance)

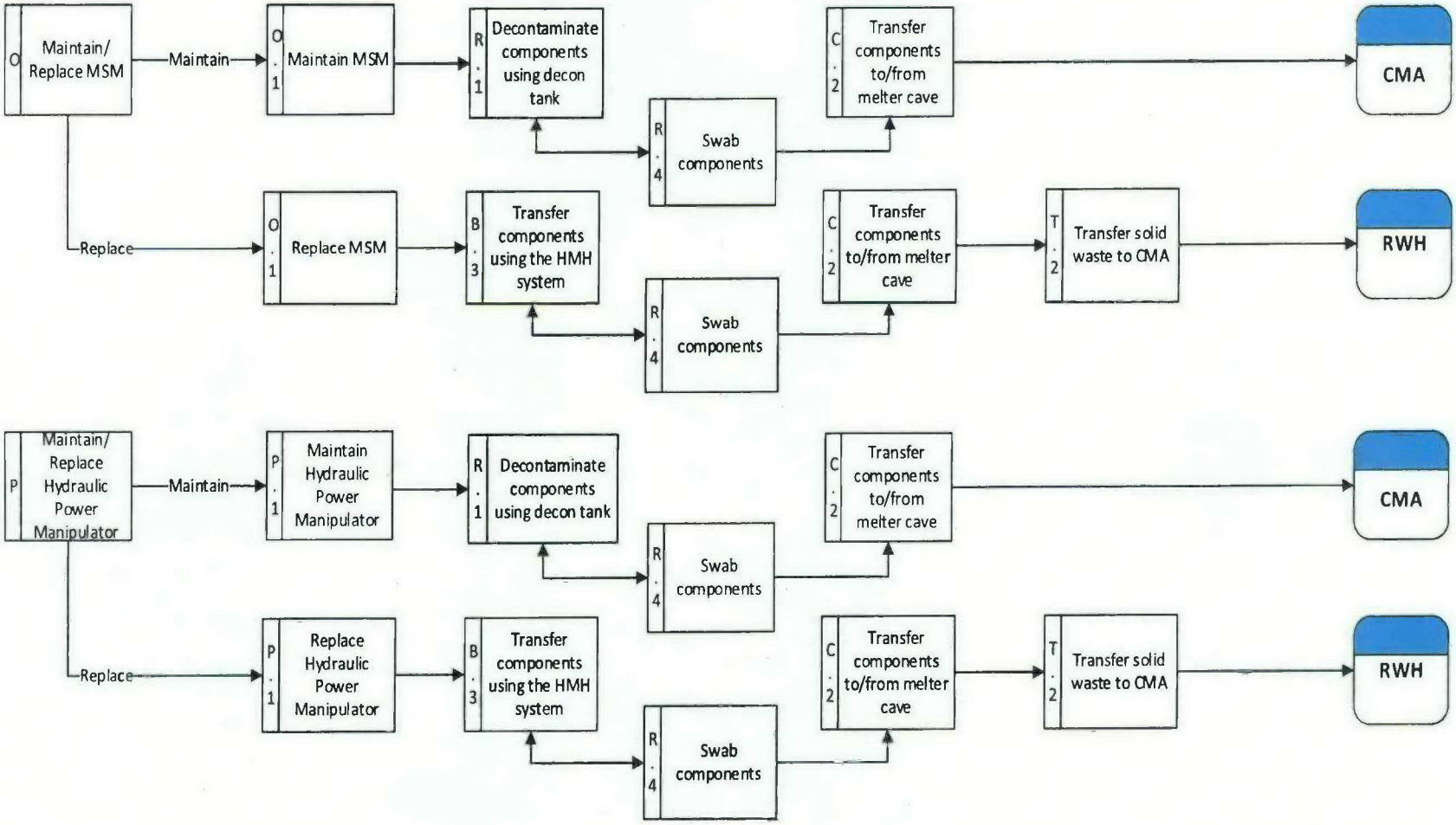

Figure 2-9 - HSH Functional Block Diagram (Remove/Replace Shield Window, Size Reduction Equip., Light Bulbs, Cameras)

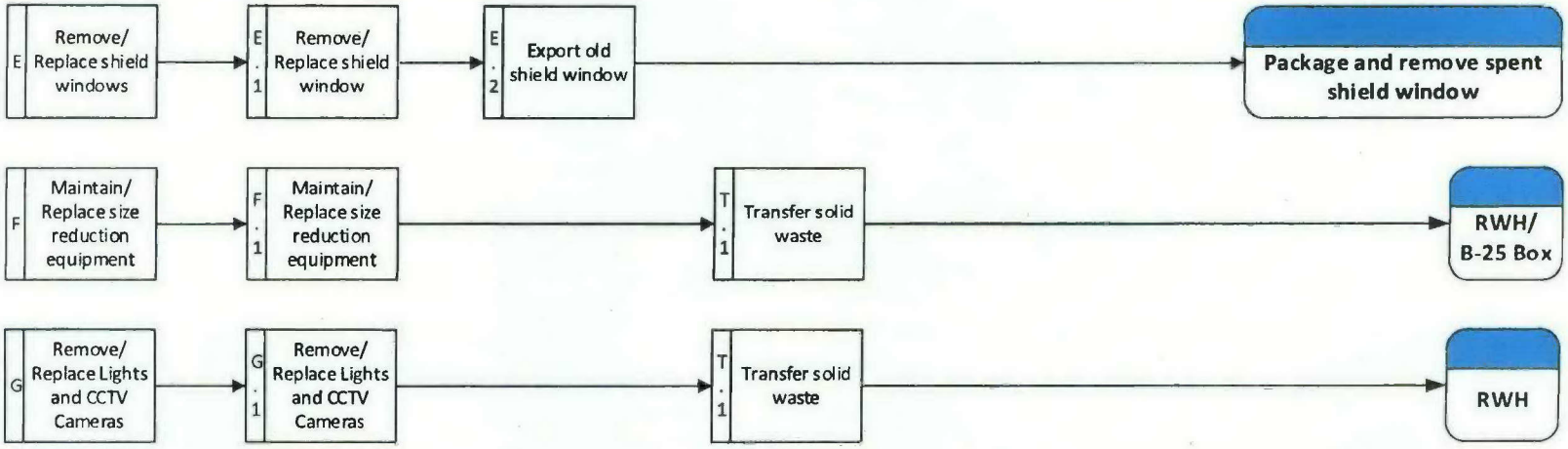

Figure 2-10 – HSH Functional Block Diagram (Other Support Functions)

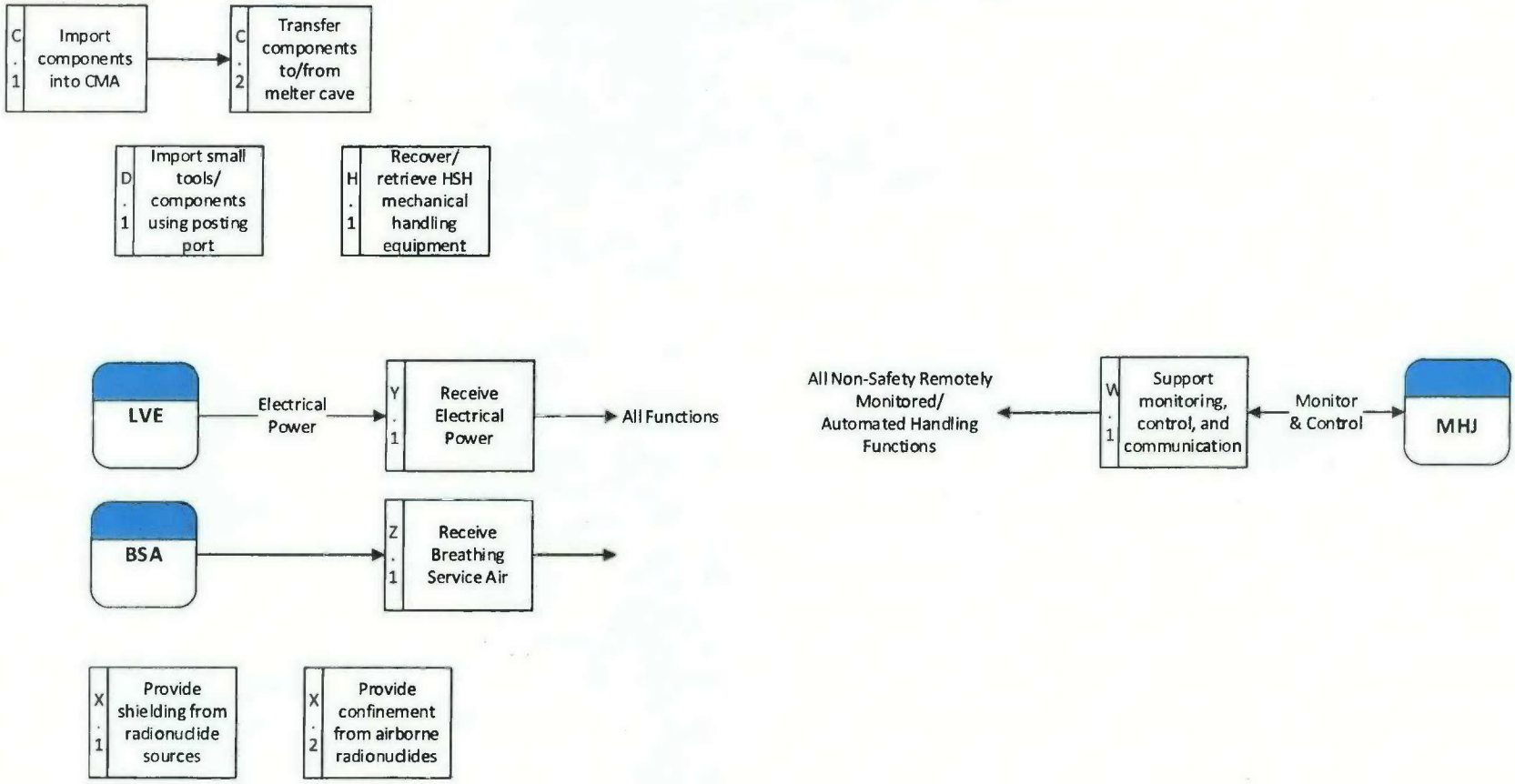

The functions included in Figure 2-5 through Figure 2-10 are the primary and secondary level functions of the HSH system. These functions are further described in Table 2-1 and Appendix B. Where appropriate to support definition of functional/design requirements, functions have been further decomposed and additional levels of supporting functions are also described. The requirement section number provides the location of the applicable functional analysis incorporated into system requirements.

Table 2-1 - Functional Analysis & Crosswalk to Requirements

Reference	Functional Analysis Description	Requirement Section No.
A.	**Remove/Replace HLW Melter – Disconnect and export the old HLW melter, import and install new HLW melter and reconnect melter components. Functions are to be performed remotely using the main melter crane, power manipulator crane, MSMs, and manipulator operated tools.**	N/A
A.1	Disconnect and Remove Melter Components – Disconnect, remove and store the melter jumpers and other components that are not being replaced.	3.4.4.1.3, 3.8.1.2
A.1.1	Disconnect the power cables from the melter bus plug using remote operated manipulator operated tools.	3.4.4.1.3, 3.8.1.2
A.1.1.1	Remove the bus power cable tray assembly	3.4.4.1.3, 3.8.1.2
A.1.1.2	Disconnect the discharge heater cables	3.4.4.1.3, 3.8.1.2
A.1.2	Remove and store melter jumpers – Remove all melter jumpers (off-gas, standby off-gas, maintenance bypass, cooling, electrical, airline, instrument, and process feed jumpers) using the main melter crane, power manipulator crane, and manipulator operated tools and store the jumpers for re-installation.	3.4.4.1.3, 3.5.1.2, 3.5.1.2.1, 3.8.1.2
A.1.3	Disengage Melter restraints – Use the melter crane or power manipulator crane and manipulator operated tools to disengage the melter seismic and/or other restraints.	3.4.4.1.3, 3.8.1.2
A.2	Export Melter – Transfer the HLW melter to the HMH C3/C5 airlock for packaging in an overpack and make ready for export. (Reference Figure 2-3)	3.4.4.1.3, 3.4.1.5
A.2.1	Remove and store Melter Cave false floor panels – Remove the melter cave removable false floor panels using the main melter crane and store.	3.4.4.1.3
A.2.2	Connect Overpack Winch – Connect the melter overpack winch to existing melter for export.	3.4.4.1.3
A.2.3	Transfer melter – Transfer melter on the melter cave rails using a winch to a waiting overpack.	3.4.4.1.3
A.2.4	Receive spent melter in overpack and transfer to HMH system for export.	3.4.1.5
A.3	Import Melter – Transfer the replacement HLW melter from the overpack in the HMH C3/C5 airlock to the melter cave. (Reference Figure 2-4)	3.4.4.1.3
A.3.1	Receive new HLW melter – Receive new melter in overpack from the HMH system at the C3/C5 melter airlock.	N/A

Reference	Functional Analysis Description	Requirement Section No.
A.3.2	Transfer melter – Transfer melter on the melter cave rails from the overpack to the melter's home position using a winch.	3.4.4.1.3
A.4	Install and Connect Melter Components – Reconnect the melter jumpers and other components.	3.4.4.1.3, 3.8.1.2
A.4.1	Install seismic or other restraints – Install melter seismic or other restraints using the power manipulator crane and manipulator operated tools.	3.4.4.1.3, 3.8.1.2
A.4.2	Remove the winch – Detach the winch hook from the melter and remove the winch to a storage area.	3.4.4.1.3, 3.8.1.2
A.4.3	Install jumpers – Recover stored jumpers. Install and connect jumpers (off-gas, standby off-gas, maintenance bypass, cooling, electrical, airline, instrument, and process feed jumpers) using melter cave crane and power manipulator crane.	3.4.4.1.3, 3.8.1.2
A.4.4	Install the cable support and connect cables to the melter bus plug.	3.4.4.1.3, 3.8.1.2
A.4.4.1	Install the bus power cable tray assembly	3.4.4.1.3, 3.8.1.2
A.4.4.2	Connect the discharge heater cables	3.4.4.1.3, 3.8.1.2
A.4.5	Replace melter cave false floor panels – Replace the melter cave removable false flooring using the main melter crane of power manipulator crane.	3.4.4.1.3
B.	**Remove/Replace Vessels – Replace the Melter Feed Preparation Vessel, Feed Vessel, SBS, or HEME**	**N/A**
B.1	Disconnect and Remove Vessel Components – Disconnect, remove and store the vessel jumpers and other components that are not being replaced.	3.4.4.1.3, 3.8.1.2
B.1.1	Drain vessel – Provide for the remote drainage of the vessel being replaced.	3.4.4.1.3
B.1.2	Remove and Store Jumpers – Remove the vessel jumpers and other components using the cranes, manipulators, and manipulator operated tools and store the jumpers for later reinstallation.	3.4.4.1.3, 3.5.1.2, 3.8.1.2
B.1.3	Disengage vessel restraints – Use the melter crane or power manipulator crane and manipulator operated tools to disengage the vessel restraints.	3.4.4.1.3, 3.5.1.2.1, 3.8.1.2
B.2	Export Vessel – Transfer the vessel to the HMH C3/C5 airlock for packaging in an overpack and make ready for export. (Reference Figure 2-3)	3.4.4.1.3, 3.4.1.5, 3.12.1.1
B.2.1	Remove and store Melter Cave false floor panels – Remove the melter cave removable false floor panels using the main melter crane and store the panels.	3.4.4.1.3, 3.5.1.2
B.2.2	Hoist the vessel with the main melter crane and lifting beam from its home position and place the vessel on the vessel transfer cart.	3.4.4.1.3, 3.5.1.2, 3.5.1.2.1, 3.8.1.1, 3.12.1.1

Reference	Functional Analysis Description	Requirement Section No.
B.2.3	Transfer vessel – Transfer the vessel on the HSH Vessel Transfer Cart on the melter cave rails to a waiting overpack with the overpack winch.	3.12.1.1
B.2.4	Receive spent vessel in overpack and transfer to HMH system for export.	3.4.1.5
B.3	Import Vessel – Transfer the replacement vessel from the overpack in the HMH C3/C5 melter airlock to melter cave. (Reference Figure 2-4)	N/A
B.3.1	Receive new vessel – Receive the new vessel on a vessel transfer cart in an overpack at the C3/C5 melter airlock.	3.4.4.1.3, 3.12.1.1
B.3.2	Transfer vessel – Transfer the vessel on the HSH Vessel transfer cart on the melter rails to the vessel staging position using a winch.	3.12.1.1
B.4	Install and Connect Vessel Components – Install the vessel, vessel restraints and install and connect the vessel components.	3.4.4.1.3, 3.8.1.2
B.4.1	Hoist vessel with main melter crane and lifting beam and place the vessel in its home position.	3.4.4.1.3, 3.5.1.2, 3.8.1.1
B.4.2	Install vessel restraints – Install the vessel restraints using the power manipulator crane and manipulator operated tools.	3.4.4.1.3, 3.8.1.2
B.4.3	Retract vessel transfer cart – Retract the vessel transfer cart to the melter overpack for export.	3.12.1.1, 3.12.1.4
B.4.4	Install jumpers – Recover stored jumpers. Install and connect jumpers using the melter cave crane, power manipulator crane and manipulator operated tools.	3.4.4.1.3, 3.8.1.2
B.4.5	Replace melter cave false floor panels – Replace the melter cave removable false flooring using the main melter crane or power manipulator crane.	3.4.4.1.3
C.	**Import and Transfer Components to Melter Cave** (Reference Figure 2-4)	**N/A**
C.1	Import Components into the CMA – Components and consumables are received in the CMA through a hatch located in the CMA using the CMA crane.	3.5.1.2
C.1.1	Receive components and consumables from a vessel transfer cart on the HMH rails in the C2/C3 airlock.	3.12.1.1, 3.12.1.4
C.1.2	Remove CMA floor hatch and hoist items using the CMA crane to the CMA area. Replace CMA floor hatch upon receipt of items.	3.5.1.2
C.2	Transfer Components to and from Melter Cave – Components and consumables are transferred to and from the melter cave using a combination of the main melter crane, power manipulator crane, and a shuttle cart.	3.5.1.2, 3.12.1.3
C.2.1	Transfer components between the CMA and CDA using the shuttle cart.	3.12.1.3, 3.12.1.4
C.2.2	Transfer components between the CDA and melter cave using the main melter crane or power manipulator crane.	3.5.1.2

Reference	Functional Analysis Description	Requirement Section No.
D.	**Import Small Tools or Components Using Posting Port**	**N/A**
D.1	Import Small Tools or Components Using Posting Port – Small tools or components may be imported to the melter cave using the posting port's limited volume tray.	3.7.1.3, 3.7.1.4
E.	**Remove/Replace Shield Windows – Remove and re-install the shield windows in the melter cave area and equipment decontamination pit area.**	**N/A**
E.1	Remove and Replace Shield Windows – Remotely install the shield plate over the in-cave window aperture. Remove and re-install the shield window in the melter cave area or equipment decontamination pit area from C2/R2 (cold) side. After the shield window has been replaced remotely remove the shield plate.	3.4.4.1.3, 3.8.1.2, 3.10.1.6
F.	**Maintain/Replace the Size Reduction Equipment – The HSH equipment performs the function of remotely maintaining, repairing, or replacing the size reducing equipment.**	**N/A**
F.1	Maintain/Replace the Size Reduction Equipment – The HSH equipment performs the function of remotely maintaining, repairing, or replacing the size reducing equipment.	3.4.4.1.1, 3.8.1.2
F.1.1	Maintain the shear – The HSH cranes, manipulators, and manipulator operated tools maintain the shear replacing the shear blade, shear anvil, shear piston and shear clamp.	3.4.4.1.1, 3.8.1.2
F.1.2	Remove/replace the shear – The HSH cranes, manipulators, and manipulator operated tools remove and replace the shear machine.	3.4.4.1.1, 3.8.1.2
F.1.3	Maintain the saw – The HSH cranes, manipulators, and manipulator operated tools maintain the saw replacing the saw blade, saw drive belt and saw clamp.	3.4.4.1.1, 3.8.1.2
F.1.4	Remove/replace the saw – The HSH cranes, manipulators, and manipulator operated tools remove and replace the saw machine.	3.4.4.1.1, 3.8.1.2
F.1.5	Remove/replace the plasma torch – The HSH cranes, manipulators and manipulator operated tools remove and replace the plasma torch.	3.4.4.1.1, 3.8.1.2
G.	**Remove/Replace Light Bulbs and CCTV Cameras -**	**N/A**
G.1	Remove/Replace Light Bulbs and CCTV Cameras — Remotely replace the in-cave and equipment decontamination pit light bulbs and CCTV cameras.	3.4.4.1.3, 3.8.1.2
G.1.1	Export spent light bulbs and CCTV cameras.	N/A
H.	**Recover/Retrieve HSH Mechanical Handling Equipment -**	**N/A**
H.1	Recover/Retrieve HSH Mechanical Handling Equipment - Recover/retrieve the HSH mechanical handling equipment in the event of in-cave malfunction or of being remotely replaced.	3.4.4.1.1, 3.5.1.5, 3.9.1.3
H.1.1	Recover the main melter crane back through the CDA to the CMA without its load.	3.4.4.1.1, 3.5.1.5
H.1.2	Recover the power manipulator crane back through the CDA to the CMA without its load.	3.4.4.1.1, 3.5.1.5

Reference	Functional Analysis Description	Requirement Section No.
H.1.3	Maintain the breakdown area hoist located in the melter cave by removing the hoist from the bridge and transporting back through decontamination to the CMA.	3.4.4.1.1, 3.5.1.5
I.	**Maintain HLW Melter - Perform the lifecycle handling of the melter, melter consumables and associated jumpers using the HSH cranes, manipulators, and manipulator operated tools remotely.**	**N/A**
I.1	Remove and Replace Melter Consumables - Remove and replace the melter consumables including the feed nozzle, frit addition nozzle, startup heaters, bubblers, air lift lances, thermowells, thermocouples, level detector, film cooler and cleaner, pour spout, discharge chamber lid and heaters, melter plenum and pour stream cameras remotely using the HSH equipment.	3.4.4.1.3, 3.4.4.2, 3.4.4.3, 3.8.1.2
I.1.1	Remove the melter off-gas jumper and film cooler, then install the new film cooler and re-install the melter off-gas jumper.	3.4.4.1.3
I.1.2	Store melter consumables in the melter cave area to preclude excessive opeirng of the shield doors.	3.4.4.4
I.2	Remove and Connect the Melter Bus Plug – Disconnect the melter bus plug when the melter is being replaced and connect the new melter to the main bus using manipulator operated tools remotely.	3.4.4.1.3, 3.8.1.2
I.3	Maintain Pour Spout – Maintain the pour spout with the removal and replacement of the pour spout, cleaning out the drip tray, replacing the drip tray limit switch, and replacing the pour stream camera.	3.4.4.1.3
I.4	Provide for Off-Normal Melter Maintenance - Provide for an off-normal event in which the melter lid must be removed and the solidified glass and refractory removed.	3.4.4.1.3, 3.8.1.2
I.4.1	Remove melter lid – Remove the melter lid using the main crane, power manipulator crane and manipulator operated tools.	3.4.4.1.3, 3.5.1.2, 3.8.1.2
I.4.2	Remove solidified glass and refractory from the underside of the melter lid and transfer to the waste transfer port.	3.4.4.1.3
J.	**Maintain High Efficiency Mist Eliminator (HEME) -** Perform the lifecycle maintenance of the HEME using the remote operated HSH system cranes, manipulator, and manipulator operated tools.	**N/A**
J.1	Maintain High Efficiency Mist Eliminator (HEME) - Remove and replace the HEME filters and transport to the RWH system and if necessary replace the O-ring gasket and level and temperature detection equipment.	3.4.4.1.3, 3.8.1.2
K.	**Maintain Submerged Bed Scrubber (SBS) -** Perform the lifecycle maintenance of the SBS using the remote operated HSH system cranes, manipulator, and manipulator operated tools.	**N/A**
K.1	Maintain Submerged Bed Scrubber (SBS) -Remove and replace the SBS cooling coil unit and if necessary replace the O-ring gasket and level and temperature detection equipment.	3.4.4.1.3, 3.8.1.2
K.2	Export old SBS Bed Cooling Coil Unit.	N/A

Reference	Functional Analysis Description	Requirement Section No.
L.	**Maintain/Replace Feed Vessels Components - Maintain/replace the melter feed and feed preparation vessels and attached components - Use the associated manipulator operated tools to remotely disconnect the electrical, mechanical and instrument air. Remove mechanical agitators, sample/transfer pumps, demisters, air amplifiers, steam ejectors, flapper valves**	**N/A**
L.1	Maintain Process Equipment – Maintain the process equipment (sample/transfer pumps, demisters, air amplifiers, steam ejectors, flapper valves, etc.) by removing any jumpers and anchors then uninstalling component and placing on appropriate decontamination template. Load template on shuttle cart and transfer to decontamination area. After decontamination transfer component to CMA for maintenance, repair or export.	3.4.4.1.3, 3.8.1.2
M.	**Maintain/Replace ADS Pump -**	**N/A**
M.1	Maintain the ADS Pump – Provide for the potential in-situ maintenance of the ADS pump consisting of greasing the bearings with a remotely operated grease gun.	3.4.4.1.3, 3.8.1.2
M.2	Repair the ADS Pump – Remove and replace Air Actuator, Feed Jumper, Vent Valve using the remote operated cranes, manipulator, and manipulator operated tools. Spent components are exported.	3.4.4.1.3, 3.8.1.2
M.3	Replace ADS Pump – Remove and replace the ADS pump using the remote operated cranes, manipulator, and manipulator operated tools. The spent ADS pump is transferred to the decontamination area. After decontamination, the ADS pump is transferred to the CMA for export.	3.4.4.1.2, 3.4.4.1.3, 3.8.1.2
N.	**Maintain/Replace Agitator – Maintain the agitator by removing the motor gearbox, removing the agitator, transferring the agitator to the decontamination area. After decontamination the agitator is transferred to the crane maintenance for maintenance or repair.**	**N/A**
N.1	Maintain the Agitator - Maintain the agitator by removing the motor gearbox, removing the agitator, transferring the agitator to the decontamination area. After decontamination the agitator is transferred to the crane maintenance for maintenance or repair.	3.4.4.1.3, 3.8.1.2
N.2	Replace Agitator – Remove the motor gearbox from the agitator shaft. Size reduce the agitator components to fit in the 55-gal waste drum basket or the B-25 waste box for export. Install the replacement agitator using remote operated cranes, manipulators, and manipulator operated tools. Replace the motor gearbox and reconnect any removed jumpers.	3.4.4.1.3, 3.8.1.2
O.	**Maintain/Replace Through Wall Manipulator, Master Slave Manipulator -**	**N/A**
O.1	Maintain/Replace Master Slave Manipulator – Remove the slave portion of the MSM and transfer to decontamination area for decontamination. Once decontaminated transfer to CMA or C3 workshop for maintenance/repair/replacement.	3.4.4.1.1, 3.4.4.1.2, 3.4.4.1.3, 3.8.1.2, 3.9.1.3

Reference	Functional Analysis Description	Requirement Section No.
P.	**Maintain/Replace Hydraulic Power Manipulator -**	**N/A**
P.1	Maintain/Replace Hydraulic Power Manipulator – Remove the in-cave hydraulic power manipulator using the melter main crane and manipulator operated tools to disconnect and transfer a crane mounted arm cradle to the decontamination area, then to the crane maintenance area.	3.4.4.1.1, 3.4.4.1.2, 3.4.4.1.3, 3.8.1.2, 3.9.1.3
Q.	**Support HLW Melter Startup -**	**N/A**
Q.1	Remotely Support the Startup of the HLW Melter – Components necessary for melter startup e.g., heaters, frit, etc., are transported and installed remotely using HSH equipment.	3.4.4.1.3, 3.4.4.2, 3.4.4.3
Q.1.1	Remotely install the HLW melter mechanical, electrical, and instrument jumpers.	3.4.4.3
Q.1.2	Transport and remotely add bulk frit to the HLW melter.	3.4.4.3
Q.1.3	Remove the preinstalled start-up heaters remotely.	3.4.4.3
Q.1.4	Install melter lid consumables (bubblers, etc.).	3.4.4.3
R.	**Perform Contamination Control – Perform contamination control by decontaminating equipment and components prior to the transport of the components to the CMA for hands-on maintenance or packaging for disposal and by the use of a central vacuum system.**	**N/A**
R.1	Decontaminate Components Using Decontamination Tank - Perform wet decontamination in the decontamination tank of equipment prior to hands on maintenance or equipment disposal	3.6.1.1, 3.6.2.1, 3.6.3.1, 3.6.3.2, 3.6.3.3, 3.6.3.5, 3.13.1.3.1, 3.13.1.3.2
R.1.1	Prevent the escape of vapors, fumes or other emissions into the air	3.6.2.2
R.1.2	Transfer the decontamination tank effluent to the RLD system	3.6.2.3
R.2	Decontaminate Components Using Spray Lances - Decontaminate equipment and components using spray lances using high pressure water, steam, or CO_2 pellets	3.5.4.7, 3.6.1.3, 3.6.3.2, 3.6.3.3, 3.6.3.5
R.3	Decontaminate Small Components - Perform wet decontamination of small equipment/components using the parts washer.	3.6.3.1, 3.6.3.2, 3.6.3.3, 3.6.3.5, 3.6.1.3
R.4	Swab Components – Use swabs on the components that are being transferred to the CMA to ensure component meets radiologic limits.	N/A
R.5	Vacuum Contamination Using the Central Vacuum System – The central vacuum is used to reduce gross contamination levels on equipment and within the cave and provide source extraction at the point of generation.	3.11.1.1
R.5.1	Vacuum contamination particulate at the point of generation during size reduction activities at the breakdown area.	3.11.1.1
R.5.2	Position extraction point and hoses using power manipulator crane throughout the balance of the melter cave.	3.11.1.1
R.5.3	Collect material in a solid waste basket and exhaust air into melter cave.	3.11.1.1

Reference	Functional Analysis Description	Requirement Section No.
S.	**Reduce Size of Components – Reduce the size of components using the size reducing equipment with assistance of the cranes and manipulator-operated tools to disassemble or size-reduce waste remotely prior to packaging and export from the melter cave.**	**N/A**
S.1	Reduce the Size of Jumpers - Reduce the size of the mechanical, electrical, and instrumentation jumpers to fit inside the solid waste basket or B-25 waste box.	3.4.1.3
S.2	Reduce the Size of HLW Melter Components - Reduce the size of the melter components including the feed nozzle, bubblers, thermowell, thermocouples, discharge heater, and pour spout components to fit inside the solid waste basket or B-25 waste box.	3.4.1.3
S.3	Reduce the Size of Vessel Components - Reduce the size of the melter feed preparation vessel and feed vessel components that can be size reduced, including gaskets, transfer pumps, transfer pump motors, agitators, agitator motors, thermowells, thermocouples, bubblers, ADS pump body, ADS pump actuator, ADS pump valve and ejector to fit inside the solid waste basket or B-25 waste box.	3.4.1.3
S.4	Reduce the Size of the SBS Components - Reduce the size of the SBS components including the gaskets, thermocouples, and cooling coils to fit inside the solid waste basket or B-25 waste box.	3.4.1.3
S.5	Reduce the Size of the HEME Components - Reduce the size of the HEME components including the gaskets, thermocouples, thermowells, and filters to fit inside the solid waste basket or B-25 waste box.	3.4.1.3
T.	**Transfer Packaged Waste– Transfer packaged waste remotely to the HLW radioactive solid waste handling system (RWH) through the waste transfer port in a solid waste basket, through decontamination to the crane maintenance area for packaging in a B-25 waste box, or to the melter handling system (HMH) for packaging in an overpack. If necessary, the system can also receive waste generated in the canister handling cave.**	**N/A**
T.1	Transfer the Solid Waste Basket to the RWH – Transfer the solid waste to the RWH system through the waste transfer port in the melter cave area.	N/A
T.2	Remotely Retrieve and Transfer Solid Waste - Remotely retrieve and transfer solid waste that is adequately decontaminated to the crane maintenance/decontamination area for packaging in a B-25 waste box.	N/A
T.3	Provide the Capability to Remotely Retrieve and Transfer a HLW Canister – In the event of an off-normal condition provide the capability to remotely retrieve and transfer a HLW canister from the canister handling system to the melter cave area using the HSH melter crane and HLW canister grapple.	3.14.1.1

Reference	Functional Analysis Description	Requirement Section No.
U.	**Use CCTV Cameras to View Remote Operations.**	N/A
U.1	Facilitate Remote Viewing of Remote Operations via CCTV – HLW process and mechanical handling CCTV (PTJ) system provides cameras to the melter cave, crane decontamination area, equipment decontamination area, crane maintenance area and equipment maintenance area. These cameras are accessed via local operator interface panels which provide viewing capabilities to aid in maintenance and for viewing of other mechanical handling equipment activities.	3.13.1.1.1, 3.13.1.1.2
V.	**Provide Personnel Access**	N/A
V.1	Provide Personnel Access to the CMA and CDA - Shielded personnel access door (SPAD) provide the access points for personnel in to the CMA and CDA.	3.10.1.4, 3.10.1.4.1
W.	**Support Monitoring, Control, and Communication Functions of Mechanical Handling Equipment**	N/A
W.1	Support the Non-Safety Monitoring, Control and Communication Functions - Support the non-safety monitoring, control and communication functions of the HSH mechanical handling equipment.	3.13.3.3, 3.13.3.4
W.1.2	The MHJ monitors and controls movements of the mechanical handling equipment to support maintenance, installation and removal activities.	3.13.3.3, 3.13.3.4
W.1.3	The MHJ provides monitoring and control to the listed mechanical handling equipment: • Main melter cranes (HSH-CRN-00001/00014) • Power manipulator cranes (HSH-MANIP-00010/00023) • Shield Lid decontamination pit (HSH-MHAN-00032/00060) • Crane decontamination area shield doors (HSH-DOOR-00001/00002/00005/00006) • Crane maintenance area shield doors (HSH-DOOR-00003/00004/00007/00008) • Cable reeling system main crane (HSH-RCVY-00014/00019) • Cable reeling system power manipulator crane (HSH-RCVY-00008/00018)	3.5.1.4.1, 3.5.4.6, 3.13.3.3, 3.13.3.4
W.1.4	The MHJ provides monitoring and control to the following equipment recovery devices: • Melter crane • Power Manipulator crane	3.5.1.5, 3.13.3.3, 3.13.3.4

Reference	Functional Analysis Description	Requirement Section No.
W.1.5	Provide Non-safety interlocks to prevent potential damage to the facility and equipment: • Crane maintenance area shield doors (HSH-DOOR-00003/00004/00007/00008) • Crane decontamination area shield doors (HSH-DOOR-00001/00002/00005/00006) • Main melter cranes (HSH-CRN-00001/00014) • Power manipulator cranes (HSH-MANIP-00010/00023)	3.13.1.4.1, 3.13.1.4.2, 3.13.1.4.3
W.1.6	The following equipment is operated independently of the MHJ and are locally controlled: • Decontamination area crane • Maintenance area crane • Maintenance pit jib crane • Breakdown table hydraulic power manipulator • Sorting table hydraulic power manipulator • Central vacuum system • Melter import winch and limit switch assembly • Breakdown area hoist • Size reduction system • Fixed shear • Shuttle cart • Posting port	3.5.4.9, 3.13.1.2.1, 3.13.1.2.2
W.2	Support the Active Safety Instruments and Functions - Support the active safety instruments and functions through the interface with the PPJ system or engineered as local safety instrumented functions.	3.13.3.1
W.2.1	Support the following safety interlocks implemented through interface with the PPJ system or engineered as local safety instrumented functions: • Melter Cave 1 Posting Port Gamma Monitor Interlock • Melter Cave 2 Posting Port Gamma Monitor Interlock • Melter Cave 1 Posting Port Door-to-Door Interlock • Melter Cave 2 Posting Port Door-to-Door Interlock	3.13.2.1, 3.13.2.2, 3.13.2.3, 3.13.3.1
X.	**Provide Shielding/Confinement in the CMA and CDA**	**N/A**
X.1	Provide Adequate Shielding from Radionuclide Sources - Provide adequate shielding from radionuclide sources on the CMA and CDA equipment doors, personnel access doors, and decontamination pit hatch to prevent radionuclide exposure to workers.	3.10.1.1, 3.10.1.5, 3.10.2.1, 3.10.2.2
X.2	Provide Confinement from Airborne Radionuclides – Doors and transporting equipment provide features for the confinement of radionuclide contamination.	3.10.1.1, 3.10.1.4, 3.10.1.5

Reference	Functional Analysis Description	Requirement Section No.
Y.	**Receive Electrical Power**	**N/A**
Y.1	Receive Electrical Power. The low voltage electrical (LVE) system provides electrical power to the HSH equipment and instruments.	N/A
Y.1.1	On loss of offsite electrical power HSH mechanical handling equipment cease operations in a failsafe manner.	3.13.4.1

2.2 System Classification

The HSH system contain components with the following classifications/designations:

- ☒ Safety Class
- ☒ Safety Significant
- ☒ Dangerous Waste Permit affecting
- ☐ Air Permit affecting
- ☐ Waste Acceptance Impacting
- ☒ General

2.3 Basic Operational Overview

A functional description of the system is provided in sections 2 and 2.1, which provide the context diagram for the system, interfaces with other systems, a functional block diagram, and descriptions of the system functions. A basic operational overview of the system is provided below; detailed operational information is provided in Section 4.

The HLW melter cave support handling system (HSH) enables remote maintenance and recovery of all remotely handled equipment located within the HLW melter caves 1 and 2, which are alike. The mechanical handling in-cave operations are performed remotely using a combination of cranes and manipulators with appropriate tooling, shield windows, and closed circuit television cameras (CCTVs).

The equipment layout is similar for both melter caves and associated decontamination and maintenance areas, and system HMH airlocks, reference Figure 2-2. The melter caves are serviced by power manipulator cranes (HSH-MANIP-00010 and HSH-MANIP-00023 for caves 1 and 2, respectively) and 25-ton main cranes (HSH-CRN-00001 and HSH-CRN-00014 for caves 1 and 2, respectively). The cranes are used to install and remove heavy equipment, such as agitators or pumps.

System HSH consists of all systems, structures, and components that perform or enable the lifecycle handling of remotable equipment within the melter caves (H-0106 and H-0117) and the associated decontamination (H-0310 and H-0304) and maintenance (H-0309 and H-0303) areas. The system provides remote maintenance and remote physical operations of the melter and melter process systems, including startup melter support. The system enables equipment and personnel import and export, equipment assembly, interim storage and disassembly, in-situ and in-cave maintenance of equipment, shielding, contamination control and decontamination, equipment size reduction, packaging and export of solid waste and eventual facility decommissioning and deactivation. Remote operations receive a combination of visual feedback through shield windows and closed circuit television (CCTV) cameras, remote sensing device feedback, or actual force feedback from manually operated master slave manipulators (MSMs). Remote operations are conducted from the crane control room or the C2 corridors

at a local operator interface (LOI) console, local control panel or shield window station. Remotable equipment is defined herein as equipment purposely designed and built to be remotely handled. As melter caves 1 and 2 are configured and outfitted similarly, both melter caves will be addressed in the singular form throughout this document.

The HSH boundary with the HLW Radioactive Solid Waste Handling System (RWH) is at the drum transfer tunnel. For the HLW Melter Handling System (HMH), HLW Melter Process System (HMP), HLW Melter Feed Process System (HFP), HLW Melter Offgas Treatment Process System (HOP) and various utilities, the boundaries are at the interface with the HSH remote handling equipment.

Reference Figure 2-2 - System HSH Plan View at Elev. for the following discussion:

System HSH is contained within an operating envelope consisting of six discrete areas, separated by shield walls, shield doors or shield lids. These areas are the operations corridors, the crane maintenance area (CMA), the equipment maintenance area (EMA), the crane decontamination area (CDA), the equipment decontamination pit (EDP) and the melter cave.

The CMA provides a hands-on (contact) maintenance area for cranes and equipment and an import / export route for both personnel and equipment. The CMA connects to the C2/R2 operating corridors through shielded personnel access doors (SPADs) and the C2/C3 melter airlock below through a crane operable, three section, shielded floor hatch. The CMA also houses the cable reels serving the melter cave main crane and power manipulator crane. The CMA connects to the CDA's north end through a set of vertical and horizontal crane shield doors and though a third SPAD.

The equipment maintenance area provides a C3 maintenance area for long process equipment and for extending the telescopic mast of the power manipulator crane for routine maintenance.

The CDA provides a C3/C5 decontamination area for cranes and continues the import / export route from the CMA to the melter cave. The CDA is connected to both the melter cave's north end and the CMA's south end through matching sets of vertical and horizontal crane shield doors. The CDA is also connected to the CMA through aforementioned SPAD. Tasks within the CDA are performed both remotely and hands-on.

The equipment decontamination pit is used to house the necessary decontamination tanks and sprayers to decontaminate components that are being retrieved to the maintenance area for maintenance or replacement.

The melter cave houses the high level waste vitrification process equipment, including the HLW melter, feed vessel, feed preparation vessel, submerged bed scrubber, and high efficiency mist eliminator. The melter cave is sub-divided into three physical areas; the feed vessel area, offgas vessel area and melter area. The melter cave opens to the HLW Canister Pour Handling System (HPH) tunnel through a floor opening near the south end of the cave and to the HLW Radioactive Solid Waste System (RWH) drum transfer tunnel near the northwest corner of the cave. No personnel access is allowed into the C5/R5 melter cave so all tasks within the cave are performed remotely through a combination of shield windows, cranes, manipulators, a posting port and numerous ancillary mechanical handling equipment. A false floor provides storage and remote handling access to critical melter consumable and process equipment spares. A breakdown table, vacuum system, size reduction equipment and a waste transfer port (RWH system) enable the solid waste export activities arising from normal melter operations. Winches, lifting

beams and carts enable the handling of the melter and larger pieces of process equipment. The melter cave contains a 25 ton bridge crane and a bridge crane mounted power manipulator with an auxiliary slewing hoist. Both melter cave cranes traverse from the melter cave through the CDA and into the CMA for decontamination, routine maintenance, inspection, and repair. In addition to the overhead cranes, the melter cave contains multiple through wall master slave manipulators (MSM) and two through-wall hydraulic power manipulators (HPMs) for remote equipment maintenance and size reduction operations. For operational visibility, a series of shield windows in conjunction with a through wall and wall mounted lighting, a closed circuit television (CCTV) system and crane mounted cameras and lights are provided.

3 Requirements

3.1 Requirements

Requirements are documented in Sections 3.1 through section 3.14. Each requirement statement is accompanied by a basis discussion (as needed) and the expected means of verification. Requirements must be met in the design. If a requirement stated in this document cannot be met in the design, then a revision to the requirement needs to be pursued, if possible, or the design must be changed to meet the requirement.

Requirements preceded by "**[HOLD]**" may only be used in support of preliminary or committed design, which shall also be issued with appropriate holds per 24590-WTP-3DP-G04B-00046, *Engineering Drawings* procedure. They may not be used in support of fabrication or construction.

The following abbreviations are used to designate the selected method for verification (see 24590-WTP-GPG-ENG-0161, *Technical Requirements Management*, for additional guidance concerning methods of verification):

(I) Inspection
(A) Analysis
(D) Demonstration
(T) Test

The following abbreviations are used to designate the organization responsible for performing the verification:

(ENG) Engineering
(CON) Construction
(SU) Start-up
(COM) Commissioning
(SUP) Supplier
(SUB) Subcontractor
(SQR) Supplier Quality Representative
(REC) Receiving

3.2 Bases

Basis discussions are provided as needed to explain the decomposition or interpretation from the originating source requirement(s). Where included, basis discussions provide supplementary information

to help the reader understand the origin or intent of a requirement. Basis statements do not include requirements and are not to be considered as requirements. Where a [**HOLD**] has been applied to a requirement, this section will include the basis for the "HOLD".

3.3 References

The requirements include a source document reference and a requirement object identification number (ROIN) included in brackets following the requirement statement. Each unique source document reference, with ROIN number(s), is bracketed separately. Requirements may include a reference to the Table 2-1 - Functional Analysis & Crosswalk to Requirements, listed in parentheses following the source document and ROIN number references. A complete listing of all source references is provided in Section 5.

3.4 General Requirements

3.4.1 Mission and Functional / Performance Requirements (Including States/Modes)

3.4.1.1 Design Life

3.4.1.1.1 Service (Operating) Life

Requirement: Except as noted below, non-replaceable, permanent HSH plant equipment shall be designed for a minimum design life of 40 years, inclusive of maintenance. All non-maintainable items of HSH equipment shall be designed to last the life of the facility (40 years). Design life of in-cell/in-cave equipment shall consider the effects of chemical, radiological and thermal exposure. [Sections 11.1.1, 12.6.1, BOD, ROIN: 1-41120, ROIN: 1-41121B, 1-41325][Section 11.7.4, BOD, ROIN: 8-6564][Section 11.7.4, BOD, ROIN: 2-43141][Section 14.1, ORD, ROIN: 8-3584]

Table 3-1 - Mechanical Equipment

Equipment/Component Description	40 Year Design life
Cranes	Yes
Power Manipulator Crane	Yes
Lifting Devices	Yes
Equipment Shield Doors	Yes
Shielded Personnel Access Doors (SPAD)	Yes
Hydraulic Power Manipulators	Yes
Master Slave Manipulators	Yes
Shield Windows	Yes
Shuttle Cart	Yes
Central Vacuum	Yes
Size reducing equipment	Yes
Decontamination tank and components	Yes

Basis discussion: Equipment and material selection is based on proven performance, value engineering principles, and fit-for-function principles. The selection of equipment and materials is further addressed in detail as the design progresses. In-cell/in-cave equipment design considers the routine environmental

exposures under normal operations for non-safety equipment; safety equipment also considers abnormal and emergency exposures – this minimizes the need for equipment maintenance, exposure and radiological waste generation in radiological areas. [ALARA]

Verification: Verification is expected to be achieved through:

Verif. Method	Verif. By	Plan	Notes/Comments
A/I	ENG	The "qualified" design life for safety SSCs is to be verified through equipment environmental qualification documentation that may be accomplished through analysis or testing.	Document verification in equipment qualification package (EQP)
I	ENG	Verify the supplier certificate of conformance versus design life requirement established in the material requisition (specification or datasheet) for non-safety SSCs (cranes, manipulators, etc.) to verify required design life is met.	Document in an evaluation/assessment

3.4.1.1.2 Room Environment Conditions for Safety SSCs

Requirement: The Safety equipment in the HLW HSH system credited with a safety function shall be designed to operate and withstand the most severe environmental conditions identified for HLW melter caves #1 and #2 (rooms H-0117 and H-0106), HLW decontamination areas (rooms H-0310 and H-0304), and HLW crane maintenance areas (rooms H-0309 and H-0303), inclusive of aging effects through their qualified life. [Safety Criterion 4.4-1, 4.3-4, SRD, ROIN: 1-38690, ROIN: 1-38679, ROIN: 8-3520, ROIN: 8-3521, ROIN: 1-38680][Section 11.7.3, BOD, ROIN: 8-13212].

Basis discussion: Safety SSCs designated as SC and SS are designed and qualified to perform their safety function as intended in the room environment conditions associated with the events for which they are intended to respond. The effects of aging on normal and abnormal functioning are considered in design and qualification. *HLW Room Environment Data Sheet* (24590-HLW-U0D-W16T-00001) identifies environmental conditions for rooms that house safety SSCs.

Verification: Verification is expected to be achieved through:

Verif. Method	Verif. By	Plan	Notes/Comments
A/T	ENG	Perform analysis or testing to verify the ability of the SSCs credited with a safety function to withstand the specified environmental conditions for the rooms in which they are installed.	*Document in EQP.* See *HLW Room Environment Data Sheet* (24590-HLW-U0D-W16T-00001) for the room environmental conditions
I	ENG	Review the design to verify conformance to the as-tested or as-analyzed configuration of the safety SSCs for the rooms in which they are installed.	*Document in an evaluation/assessment report or EQP*

3.4.1.1.3 Room Environment Conditions for non-Safety SSCs

Requirement: Non-safety equipment/components shall be designed to operate and withstand the room environment conditions for which they operate or are installed. [Table 12-1, BOD, ROIN: 2-39190][Section 14.8, ORD, ROIN: 8-7839][Section 11.9, BOD, ROIN: 1-41220, ROIN: 1-41221][Section 11.16, ORD, ROIN: 14-1248E][Section 16.1, ORD, ROIN: 8-7000]

Basis discussion: Non-safety SSCs are designed to function as intended in the room environment conditions associated with their location.

Verification: Verification is expected to be achieved through:

Verif. Method	Verif. By	Plan	Notes/Comments
I	ENG	Review the design of non-safety SSCs to ensure compliance with BOD Table 12-1 conditions for rooms in which they are installed.	Document in an evaluation/assessment

3.4.1.1.4 Seismic Design

Requirement: Elements of the HSH system shall be designed for seismic conditions in accordance with the Table 3-2 below: [Safety Criterion: 4.1-3, SRD, ROIN: 1-38653, ROIN: 8-14293] [Section 4.3.9.2, PDSA, ROIN: 40-2740, ROIN: 40-2741, ROIN: 40-2742, ROIN: 40-2743, ROIN: 40-2744, ROIN: 40-2745][Section 4.4.1.2, PDSA, ROIN: 40-2732, ROIN: 40-2733, ROIN: 40-2734, ROIN: 40-2735, ROIN: 40-2736, ROIN: 40-2737, ROIN: 40-2738, ROIN: 40-2739][Section 4.4.1.1, PDSA, ROIN: 14-7010][Section 5.6.1, PDSA, ROIN: 8-16157][Section 4.4.1, PDSA, ROIN: 2-46201][Section 4.4.1.4, PDSA, ROIN: 14-7011][Section 11.7.3, BOD, ROIN: 8-13210][Section 4.4.22, PDSA, ROIN: 2-46203, ROIN: 2-46204][Section 4.4.13, PDSA, ROIN: 43-1786][Section 4.3.1, 4.3.1.2, PDSA, ROIN: 1-21507, ROIN: 1-21509]

Table 3-2 - HSH Seismic Design Categories

Description	Seismic Category	Reference
HSH-DOOR-00001, Vertical shield door melter cave 2 crane decontamination area	SC-II	Section 4.4.1.2, PDSA – HLW Facility
HSH-DOOR-00001, Vertical Shield door bridge beam melter cave 2 crane decontamination area	SC-I	Section 4.3.1, 4.3.1.2, PDSA – HLW Facility
HSH-DOOR-00002, Horizontal shield door melter cave 2 crane decontamination area	SC-II	Section 4.4.1.2, PDSA – HLW Facility
HSH-DOOR-00003, Vertical shield door melter cave 2 crane maintenance area	SC-II	Section 4.4.1.2, PDSA – HLW Facility
HSH-DOOR-00003, Vertical Shield door bridge beam melter cave 2 crane maintenance area	SC-I	Section 4.3.1, 4.3.1.2, PDSA – HLW Facility
HSH-DOOR-00004, Horizontal shield door melter cave 2 crane maintenance area	SC-II	Section 4.4.1.2, PDSA – HLW Facility
HSH-DOOR-00005, Horizontal shield door melter cave 1 crane decontamination area	SC-II	Section 4.4.1.2, PDSA – HLW Facility

Description	Seismic Category	Reference
HSH-DOOR-00006, Vertical shield door melter cave 1 crane decontamination area	SC-II	Section 4.4.1.2, PDSA – HLW Facility
HSH-DOOR-00006, Vertical Shield door bridge beam melter cave 1 crane decontamination area	SC-I	Section 4.3.1, 4.3.1.2, PDSA – HLW Facility
HSH-DOOR-00007, Horizontal shield door melter cave 1 crane maintenance area	SC-II	Section 4.4.1.2, PDSA – HLW Facility
HSH-DOOR-00008, Vertical shield door melter cave 1 crane maintenance area	SC-II	Section 4.4.1.2, PDSA – HLW Facility
HSH-DOOR-00008, Vertical Shield door bridge beam melter cave 1 crane maintenance area	SC-I	Section 4.3.1, 4.3.1.2, PDSA – HLW Facility
HSH-DOOR-00013, SPAD melter 1 crane decontamination area (12 in.)	SC-I	Section 4.3.9.2, PDSA – HLW Facility
HSH-DOOR-00015, SPAD melter 2 crane decontamination area (12 in.)	SC-I	Section 4.3.9.2, PDSA – HLW Facility
HSH-DOOR-00016, SPAD and frame melter cave 2 crane maintenance area (3 in.)	SC-I	Section 4.3.9.2, PDSA – HLW Facility
HSH-DOOR-00017, SPAD and frame melter cave 1 crane maintenance area (3 in.)	SC-I	Section 4.3.9.2, PDSA – HLW Facility
HSH-DOOR-00018, SPAD and frame melter cave 1 crane maintenance area (3 in.)	SC-I	Section 4.3.9.2, PDSA – HLW Facility
HSH-DOOR-00019, SPAD and frame melter cave 2 crane maintenance area (3 in.)	SC-I	Section 4.3.9.2, PDSA – HLW Facility
Decontamination Pit Shield Lids	SC-II	Section 4.4.1.4, PDSA – HLW Facility
HSH-TWDVC-00001, HSH-TWDVC-00002, Posting Port	SC-I	Section 4.3.1, PDSA
Melter Cave 1, 24590-HLW-MJ-HSH-MANIP-00005, 00006, 00007, 00008, 00009, 00011 (48") Melter Cave 1, 24590-HLW-MJ-HSH-MANIP-00012, 00013, 00014, 00015 (32")	SC-I	Section 4.3.1, PDSA
Melter Cave 2, 24590-HLW-MJ-HSH-MANIP-00018, 00019, 00020, 00021, 00022, 00024 (48") Melter Cave 2, 24590-HLW-MJ-HSH-MANIP-00025, 00026, 00027, 00028 (32")	SC-I	Section 4.3.1, PDSA
Interlock for Gamma Detector/Monitor relative to shield doors, hatches and posting ports (See Note 1)	SC-III	Section 4.4.22, PDSA
Interlocks between shield doors, hatches, and posting ports (See Note 1)	SC-III	Section 4.4.22, PDSA
Melter Bogie (Vessel Transfer Cart)	SC-III	Section 4.4.13, PDSA

Note 1: Interlocks consist of the sensors, logic solvers, relays, and the associated wiring and equipment.

Basis Discussion: Section 2.4.12, 24590-WTP-PSAR-ESH-01-002-01, *Preliminary Documented Safety Analysis to Support Construction Authorization; General Information*, "All components and parts of the equipment that provide or contribute to the safety functions and accident monitoring functions, including equipment supports and anchorage, shall be qualified accordingly." This qualification ensures SSCs meet

the designated seismic design requirements. SRD Safety Criterion 4.1-3 details the equivalence of the WTP seismic category to the seismic performance category of DOE-STD-1020-94. The SRD also states that safety SSCs be designed to withstand the effects of natural phenomena hazards (NPH) events (e.g., earthquakes, wind, and floods) without loss of capability to perform specified safety functions.

Verification: Verification is expected to be achieved through:

Verif. Method	Verif. By	Plan	Notes/Comments
A/T	ENG/SUP	Analysis or testing performed on safety SSCs to demonstrate capability to withstand seismic event.	This is expected to be documented in the EQPs. EQPs will be prepared for all safety components. Refer to the latest revision of 24590-WTP-PD-ENG-0001, *Equipment Qualification* for additional information, including independent peer review of seismic evaluation of the applicable SSCs (WTP and supplier-supplied) in accordance with requirements of DOE-STD-1020-94, *Natural Phenomena Hazards Design and Evaluation Criteria for Department of Energy Facilities.*
I	ENG	Review of design of safety SSCs to ensure conformance to the results of the analysis or testing and to verify that the safety function, as established in the PDSA/DSA is correctly reflected in the Equipment Qualification Datasheet (EQD) and supporting document in the EQD.	This is expected to be documented in the EQPs

3.4.1.1.5 Seismic Interaction

Requirement: All permanently mounted HSH equipment not specified in Table 3-2 shall, at a minimum, be designated Seismic Category-IV. Interaction effects shall be considered when determining the seismic category of individual items and, where an adverse seismic interaction with SC or SS equipment exists, adequate measures shall be taken to preclude the adverse interaction. [Criterion 4.1-3, SRD, ROIN: 1-38653][Section 10.2.15, BOD, ROIN: 45-21847, ROIN: 45-21848].

Basis Discussion: In accordance with 24590-WTP-GPG-ENG-033, *Evaluation for Seismic Interaction Effects*, equipment that is non-safety may be identified as having a potential for adverse interaction with safety equipment during a seismic event. Where a resolution strategy is selected to increase the seismic category of the source SSC to protect the safety (target) SSC, the resulting seismic category of the

equipment may be greater than SC-IV. In those cases, the equipment design is verified to meet the higher seismic performance category such that the target SSC is protected.

Verification: Verification is expected to be achieved through:

Verif. Method	Verif. By	Plan	Notes/Comments
A	ENG	Perform an analysis per 24590-WTP-GPG-ENG-033, *Evaluation for Seismic Interaction Effects,* to establish the seismic categorization of equipment above SC-IV based on the potential for interaction with safety equipment (i.e., II/I and III/III).	
I	ENG	Review the HSH equipment seismic design for conformance to the results of the seismic interaction analysis.	Document in an evaluation/assessment

3.4.1.1.6 Nonmaintainable Soft or Nonmetallic Parts

Requirement: The system equipment and components shall be designed with no nonmaintainable soft or nonmetallic parts that could be affected by the total integrated radiation dose including gamma and beta. [Section 16.4.1.1, BOD, ROIN: 8-5233F][Section 20, ORD, ROIN: 9-56].

Basis Discussion: The HSH equipment and components are designed to withstand the external gamma radiation (room) dose.
[ALARA]

Verification: Verification is expected to be achieved through the following:

Verif. Method	Verif. By	Plan	Notes/Comments
A	ENG	Prepare an analysis to document the expected dose rate to ensure the nonmaintable equipment and components are able to withstand the radiation doses.	See calculation 24590-WTP-Z0C-W13T-00010, Contact Dose Rates to Equipment from Beta and Gamma Emitters
I	ENG	Review of design and equipment qualification documentation for the nonmaintable safety SSCs to established radiation doses to ensure conformance.	Document verification in EQPs, this is part of the overall design review
I	ENG	Review the nonmaintable equipment datasheets to confirm design requirements for radiation dose rates for non-safety equipment are documented.	Document in an evaluation/assessment
I	ENG	Review of supplier provided certified material test reports or equivalent for nonmaintainable safety equipment (i.e., soft parts that are essential to the safety function) to ensure conformance with design requirements.	May be accomplished by EQP or separate evaluation/assessment

3.4.1.1.7 Protection from Dynamic Effects

Requirement: The HSH shield doors designated as Safety Class or Safety Significant shall be appropriately protected against dynamic effects that may result from impact from loaded cranes or transfer carts. [Safety Criterion: 4.1-4, SRD, ROIN: 1-38658, ROIN: 8-4671][Section 11.7.3, BOD, ROIN: 8-13211][Section 4.4.1.3, PDSA, ROIN: 40-26615][Section 4.4.1.4, PDSA, ROIN: 14-7011]

Basis discussion: The basis for this requirement is to protect the safety components so that they continue to perform their intended safety function.

Verification: Verification is expected to be achieved through:

Verif. Method	Verif. By	Plan	Notes/Comments
A	ENG	For SC/SS shield doors not otherwise protected from impacts, prepare a calculation(s) to verify the doors can withstand an impact and still perform their safety function.	
I	ENG	Review the design to verify that the HSH shield doors are adequately protected from impact or are designed in conformance with the impact analyses.	Document in design verification report (DVR)

3.4.1.2 Materials of Construction and Erosion/Corrosion Design Parameters

Requirement: The HSH decontamination tanks shall be designed to include allowances for erosion/corrosion and use materials of construction, including wear-resistant coatings in accordance with: [Safety Criterion 4.2-3, Appendix H Section 4.0, SRD, ROIN: 1-38668, ROIN: 1-38669, ROIN: 2-22532B, ROIN: 2-22532C][Sections 6.1, 11.8.3.1, 11.4.1, 16.4.1.4, 16.4.2.8, BOD, ROIN:40-19751, ROIN: 1-41215, ROIN: 8-5213, ROIN: 1-41147, ROIN: 8-11970, ROIN: 1-41154][Sections 9.1, 20.0 ORD, ROIN: 8-8065, ROIN: 9-56].

Basis Discussion: The HSH selection of materials for construction of the decontamination tank takes into consideration the corrosiveness of the decontamination media and decontamination processes reference the corrosion evaluation datasheet 24590-HLW-N1D-HSH-P0001, *HSK-TK-00001 & 2 (HLW) – Decontamination Tank Melter Cave 1 and 2.*

Verification: Verification is expected to be achieved through the following:

Verif. Method	Verif. By	Plan	Notes/Comments
A	ENG	SSC analyses for the HSH decontamination tanks are to document the use of acceptable materials of construction, including specified erosion and corrosion allowances.	Analyses performed and documented in corrosion evaluations
I	ENG	Review of vendor's as-built design of the decontamination tanks to verify incorporation of acceptable materials in accordance with analysis.	Document in an evaluation/assessment

3.4.1.3 Disassemble Waste – Size Reduce Components

Requirement: The HSH system shall use remote-operated tools to disassemble or size-reduce spent equipment and consumables remotely prior to packaging and export from the melter cave to the RWH system using solid waste basket or B-25 waste box via the CMA. [Section 14.8, ORD, ROIN: 8-4343][Section 18.0, ORD, ROIN: 8-11567][Section 20, ORD, ROIN: 9-56](S.1)(S.2)(S.3)(S.4)(S.5)

Basis discussion: Some components that are being replaced need to be sized reduced to fit the secondary waste requirements. Size reduction activities S.1 thru S.5 are shown in Table 2-1. There should be multiple methods of reducing the size of spent components such as band saw, hydraulic shear, and plasma torch for use on those components that can't be disassembled into the allowable size to meet the secondary waste requirements. [ALARA]

Verification: Verification is expected to be achieved through:

Verif. Method	Verif. By	Plan	Notes/Comments
I	**ENG**	Review of design to verify that anticipated equipment size reduction and packaging needs can be met.	Document in an evaluation/assessment. Recommend using a software program such as "Igrip" (or similar)
D	**SU/COM**	Demonstrate remote operation of the size reduction tooling and waste packaging operations to verify size reduction activities S.1, S.2, S.3, S.4, and S.5 shown in Table 2-1 in accordance with 24590-WTP-PL-RACT-RT-0001, *WTP Remotability Verification Plan.*	Physical demonstration
D	**SU/COM**	Demonstrate export route for removal of packaged solid waste to verify size reduction activities S.1, S.2, S.3, S.4, and S.5 shown in Table 2-1.	Physical demonstration

3.4.1.4 Maintainable Equipment Components

Requirement: Maintainable equipment components, such as drive motors, shall be located out of high radiation areas. [Section 7.1, ORD, ROIN: 9-58]

Basis Discussion: Placing the equipment out of high radiation areas alleviates the need for remote maintenance functions.

Verification: Verification is expected to be achieved through:

Verif. Method	Verif. By	Plan	Notes/Comments
I	ENG	Review of design to verify that HSH equipment is located outside the high radiation areas to the extent practical.	Document in an evaluation/assessment
I	OPS	Operations review and acceptance of the conceptual and detailed facility layout design, including participation in 3D model reviews.	OPS to prepare an evaluation/assessment(s) documenting review of maintained equipment/areas for required accessibility

3.4.1.5 Deactivation, Decontamination, Decommissioning

Requirement: The HSH equipment shall be designed such that they can perform the deactivation, decontamination, and decommissioning of the components within the melter cave and associated areas as identified below. [Section C.7(a)(11), DOE-BNI Contract, ROIN: 1-25941][Section 11.10, BOD, ROIN: 1-41232][Section 20.0, ORD, ROIN: 1-40116, ROIN: 8-4682][Section Appendix A, Subpart K, RPP, ROIN: 2-43013](A.2, A.2.4, B.2, B.2.4)

The activities include:

- Melter transferred into overpacks
- Feed Vessels transferred into overpacks
- SBS transferred into overpacks
- HEME transferred into overpacks
- Mechanical, electrical, and instrument jumpers are size reduced for export
- Agitators are sized reduced for export
- Pumps, motors and gearboxes are transferred to CDA for packaging and export
- Disposition of melter consumables

Basis discussion: After the completion of HLW vitrification process, equipment and in-cave components are deactivated, decontaminated (if necessary), decommissioned and packaged for export. The capability to access and remove the components within the melter caves is a primary function of the HSH equipment. The overpack is not in the current contract scope and will not be available at time of commissioning.[ALARA]

Verification: Verification is expected to be achieved through:

Verif. Method	Verif. By	Plan	Notes/Comments
I	ENG	Verification of this requirement is accomplished by verification of requirement 3.4.4.1.3 Remote Operability and Maintenance.	Verification is accomplished by verification of requirement 3.4.4.1.3
D	SU/COM	Verification of this requirement is accomplished by verification of requirement 3.4.4.1.3 Remote Operability and Maintenance and requirement 3.4.1.3 Disassemble Waste – Size Reduce Components.	Verification is accomplished by verification of requirement 3.4.4.1.3 and 3.4.1.3

3.4.2 Nuclear Safety, ALARA, Environmental and Other Regulatory Requirements

3.4.2.1 Safety Designations

Requirement: **[HOLD]**The following SSCs shall be designated as safety SSCs [Safety Criterion 4.1-2, SRD, ROIN: 1-38650] [Safety Criterion 4.4-2, SRD, ROIN: 1-38693] [Section 4.3.1, 4.3.1.2, 4.3.4, PDSA, ROIN: 1-21507, ROIN: 1-21509, ROIN: 2-41303][Section 4.3.9.2, PDSA, ROIN: 40-2740, ROIN: 40-2741, ROIN: 40-2742, ROIN: 40-2743, ROIN: 40-2744, ROIN: 40-2745] [Section 4.4.1.2, PDSA, ROIN: 40-2732, ROIN: 40-2733, ROIN: 40-2734, ROIN: 40-2735, ROIN: 40-2736, ROIN: 40-2737, ROIN: 40-2738, ROIN: 40-2739] [Section 4.3.9, PDSA, ROIN: 40-11528][Section 4.3.9.3, PDSA, ROIN: 40-11534][Section 4.4.13, PDSA, ROIN: 43-1786]

Note: Safety instruments are addressed separately in Section 3.13 and Appendix C.

Table 3-3 – HSH Safety Designations

Equipment/Component Description	Safety Function	Safety Classification	References
HSH-DOOR-00001, Vertical shield door melter cave 2 crane decontamination area HSH-DOOR-00002, Horizontal shield door melter cave 2 crane decontamination area HSH-DOOR-00003, Vertical shield door melter cave 2 crane maintenance area HSH-DOOR-00004, Horizontal shield door melter cave 2 crane maintenance area HSH-DOOR-00005, Horizontal shield door melter cave 1 crane decontamination area HSH-DOOR-00006, Vertical shield door melter cave 1 crane decontamination area HSH-DOOR-00007, Horizontal shield door melter cave 1 crane maintenance area HSH-DOOR-00008, Vertical shield door melter cave 1 crane maintenance area	Prevents or mitigates the exposure to direct radiation Mitigates consequences of an airborne release of radioactive material by providing an engineered air gap to maintain cascade airflow Mitigates the consequences of an airborne release to the public and/or co-located workers by providing a high-integrity confinement boundary evaluated for design basis accident (seismic and fire) conditions	SS SC	Section 4.4.1, 4.4.1.2, PDSA – HLW Facility Section 4.3.4, PDSA – HLW Facility
Decontamination Pit Shield Lid	Prevents or mitigates the exposure to direct radiation Mitigates consequences of an airborne release of radioactive material by providing an engineered air gap to maintain cascade airflow	SS	Section 4.4.1, PDSA – HLW Facility

Equipment/Component Description	Safety Function	Safety Classification	References
Physical locks or electronic lockout (with administrative controls) on shield doors and SPADs	Prevents inadvertent exposure to high or very high radiation sources	SS	Section 4.4.22, PDSA – HLW Facility
HSH-DOOR-00013, SPAD melter 1 crane decontamination area (12 in.) HSH-DOOR-00015, SPAD melter 2 crane decontamination area (12 in.) HSH-DOOR-00016, SPAD and frame melter cave 2 crane maintenance area (3 in.) HSH-DOOR-00017, SPAD and frame melter cave 1 crane maintenance area (3 in.) HSH-DOOR-00018, SPAD and frame melter cave 1 crane maintenance area (3 in.) HSH-DOOR-00019, SPAD and frame melter cave 2 crane maintenance area (3 in.)	Mitigates the consequences of an airborne release to the public and/or co-located workers by providing a high-integrity confinement boundary evaluated for design basis accident (seismic and fire) conditions	SC	Section 4.3.4, 4.3.9.2, PDSA – HLW Facility
HSH-DOOR-00001, Vertical shield door bridge beam melter cave 2 crane decontamination area HSH-DOOR-00003, Vertical shield door bridge beam melter cave 2 crane maintenance area HSH-DOOR-00006, Vertical shield door bridge beam melter cave 1 crane decontamination area HSH-DOOR-00008, Vertical shield door bridge beam melter cave 1 crane maintenance area	Mitigates the consequences of an airborne release to the public and/or co-located workers by providing a high-integrity confinement boundary evaluated for design basis accident (seismic and fire) conditions	SC	Section 4.3.1, 4.3.1.2, 4.3.4, PDSA – HLW Facility

Equipment/Component Description	Safety Function	Safety Classification	References
HSH-TWDVC-00001, HSH-TWDVC-00002, Posting Port	Mitigates the consequences of an airborne release to the public and/or co-located workers by providing a high-integrity confinement boundary evaluated for design basis accident (seismic and fire) conditions	SC	Section 4.3.1.2, 4.3.4, 4.4.2.2, PDSA – HLW Facility
	Prevents or mitigates the exposure to direct radiation	SS	Section 4.4.2.2, PDSA – HLW Facility
Melter Cave 1, 24590-HLW-MJ-HSH-MANIP-00005, 00006, 00007, 00008, 00009, 00011 (48") Melter Cave 1, 24590-HLW-MJ-HSH-MANIP-00012, 00013, 00014, 00015 (32")	Mitigates the consequences of an airborne release to the public and/or co-located workers by providing a high-integrity confinement boundary evaluated for design basis accident (seismic and fire) conditions	SC	Section 4.3.1.2, 4.3.4, 4.4.2.2, PDSA – HLW Facility
	Prevents or mitigates the exposure to direct radiation	SS	Section 4.4.2.2, PDSA – HLW Facility

Equipment/Component Description	Safety Function	Safety Classification	References
Melter Cave 2, 24590-HLW-MJ-HSH-MANIP-00018, 00019, 00020, 00021, 00022, 00024 (48") Melter Cave 2, 24590-HLW-MJ-HSH-MANIP-00025, 00026, 00027, 00028 (32")	Mitigates the consequences of an airborne release to the public and/or co-located workers by providing a high-integrity confinement boundary evaluated for design basis accident (seismic and fire) conditions	SC	Section 4.3.1.2, 4.3.4, 4.4.2.2, PDSA – HLW Facility
	Prevents or mitigates the exposure to direct radiation	SS	Section 4.4.2.2, PDSA – HLW Facility

Basis discussion: To ensure safety SSCs meet the design functions, Safety Criterion 4.4-1 of the SRD states: "Safety structures, systems, and components designated as Safety Class and Safety Significant shall be designed and qualified to function as intended in the environments associated with the events for which they are intended to respond." This requirement is on "HOLD" due to differences between the PDSA-HLW Facility and design implementation, see PIER 24590-WTP-PIER-MGT-14-0914. And the safety function and classification of SSCs designated SC are on "HOLD" pending an update to the PDSA-HLW Sections 4.3.1 and 4.3.9 to be provided after completion of the new hazards analysis. ATS, 24590-WTP-ATS-MGT-15-0098. [ALARA]

Verification: Verification is expected to be achieved through:

Verif. Method	Verif. By	Plan	Notes/Comments
I	ENG	Review the Equipment Qualification Datasheet(s) to verify inclusion of correct safety designation and function(s).	May be accomplished by EQP and/or DVR

3.4.2.2 Fire Barrier

Requirement: The following HSH equipment shall be designed with materials and methods of construction that do not reduce the required fire-resistance rating of the barrier they penetrate, as required by IBC 2000 and DOE-STD-1066-97. The following are the HSH components: [Section 10.3.4.7, BOD, ROIN: 1-41107]

- HSH shield doors: HSH-DOOR-00001, 00002, 00005 and 00006
- HSH SPADs: HSH-DOOR-00016, 00017, 00018 and 00019

- HSH MSMs: HSH-MANIP-00005, 00006, 00007, 00008, 00009, 00011, 00012, 00013, 00014, 00015, 00018, 00019, 00020, 00021, 00022, 00024, 00025, 00026, 00027, and 00028
- HSH through wall devices: HSH-TWDVC-00001 and 00002
- Hydraulic power manipulators: HSH-MANIP-00002, 00004, 00016 and 00017
- Crane cable reels: HSH-RCVY-00008, 00014, 00018 and 00019
- Plasma torch pass through ports: HSH-RCVY-00012 and 00020
- Bridge beams for vertical shield doors: HSH-DOOR-00001, 00003, 00006 and 00008
- Horizontal shield door recovery plugs: HSH-PLUG-00003, 00004, 00010 and 00011

Basis Discussion: Fire barrier drawings which include barriers related to HSH are:

- 24590-HLW-U1-60-00002, *HLW VITRIFICATION BUILDING FIRE BARRIER DRAWING PLAN AT EL 0'-0"*
- 24590-HLW-U1-60-00003, *HLW VITRIFICATION BUILDING FIRE BARRIER DRAWING PLAN AT EL 14'-0"*
- 24590-HLW-U1-60-00004, *HLW VITRIFICATION BUILDING FIRE BARRIER DRAWING PLAN AT EL 37'-0"*
- 24590-HLW-U1-60-00005, *HLW VITRIFICATION BUILDING FIRE BARRIER DRAWING PLAN AT EL 58'-0"*

Verification: Verification is expected to be achieved through:

Verif. Method	Verif. By	Plan	Notes/Comments
I	ENG	Verify all components that penetrate a fire barrier are tested or analyzed to not less than the required fire resistance rating of the barrier based on the fire exposure and acceptance criteria specified in ASTM E 119. Use of alternative methods for determining fire resistance shall be approved by the building official.	Document in an evaluation/assessment Evaluation/assessment to be submitted to the building official for approval

3.4.3 System Interface Requirements

Requirements associated with specific system interfaces are discussed in the subsequent requirement sections titled "System Interface Requirements." The HSH system interfaces are listed in Table 3-4 below:

Table 3-4 - HSH System Interfaces

System Locator	System Name	Nature of Interface
BSA	Breathing Service Air System	The BSA system provides breathing air for personnel entry into the melter cave crane maintenance area or crane decontamination area. Breathing air stations are located in the sub-change rooms outside of the shielded personnel access doors on the 23' and 58' elevations accordingly.

C5V	C5 Ventilation System	The C2V through C5V system provides temperature controlled in-bleed air into the crane maintenance area, crane decontamination area and melter cave and exhausts air from the melter cave in a balanced flow that maintains engineered air gaps across shield door openings.
DIW	Demineralized Water System	The DIW system provides demineralized water to System HSH spray lances for manual or remote decontamination purposes.
FPW	Fire Protection Water	The FPW system provides fire protection water to the sprinkler system in the gloveboxes.
HFH	HLW Filter Cave Handling System	The HFH system may export tools or equipment, through the System RWH drum transfer tunnel and waste transfer port, to System HSH for disposition as solid waste or for remote decontamination prior to contact maintenance.
HFP	HLW Melter Feed Process System	The HSH system enables lifecycle maintenance of the remotable melter feed components within the melter cave. This includes feed pumps, agitators, jumpers, instrumentation and vessels. The HFP system components that require handling by the HSH system are designed to be compatible with the HSH equipment.
HMH	HLW Melter Handling System	The HMH system provides the equipment and controls necessary to transfer a new melter or vessel within a shielded overpack (future) into the C3/C5 airlock for pass off to the HSH system. In addition, the HMH system will remove a spent melter or vessel from the melter cave. The HMH system also provides the C2/C3 and C3/C5 airlock shield doors, and all drive and control mechanisms necessary to operate them. The HMH system provides a free spooling winch with a remote hook to attach and pull the items out of the melter cave. The HMH system also provides the airlock and melter rails.
HMP	HLW Melter Process System	The HSH system enables lifecycle maintenance of the remotable melter process system components within the melter cave. This includes the melter, lid components, bus system, pour spout and jumpers. The HMP system components that require handling by the HSH system are designed to be compatible with the HSH equipment.
HOP	HLW Primary Offgas System	The HSH system enables lifecycle maintenance of the remotable melter offgas system components within the melter cave. This includes the SBS, HEMEs, lid components, instrumentation and jumpers. The HOP system components that require handling by the HSH system are designed to be compatible with the HSH equipment.
HPH	HLW Canister Pour Handling System	The HPH system may export tools or equipment to the HSH system through the canister pour tunnel for disposition as solid waste or for remote decontamination prior to contact maintenance. Additionally, System HSH may recover a waste canister from the pour bogie in the pour tunnel to the melter cave area.

HPS	High Pressure Steam System	The HPS system provides steam to the HSH system decontamination tank and pump support package for tank heating or steam cleanout of the tank drain line.
ISA	Instrument Service Air System	The non-safety ISA system provides compressed air to the HSH system; decontamination tank for sparging, plasma torch for cutting, CMA and CDA for air tools and melter cave in-cave air tools and equipment.
LTE	Lighting Electrical System	The LTE system provides general area lighting in the crane maintenance and crane decontamination area and through wall or remotable wall mounted lights in the equipment decontamination pit and melter cave. The HSH system performs the handling of the remotable in-cave wall mounted lights. The through wall lights are serviced with the MSM extraction cart.
LVE	Low Voltage Electrical (480/208/120 V) System	The non-safety LVE system provides electrical power to the HSH electrical equipment.
MHJ	Mechanical Handling Control System	The MHJ system provides remote operator control of HSH equipment, as well as non-safety interlocks and automation.
PTJ	Process & Mechanical Handling CCTV System	The PTJ system provides the closed circuit television cameras, controls, communications and operator display screens for remote viewing within the HSH system.
PVV	Process Vessel Vent Exhaust System	The HSH system enables lifecycle maintenance of the remotable process vessel vent components within the melter cave. This includes jumpers only. The PVV system components that require handling by the HSH system are designed to be compatible with the HSH equipment.
PWD	Plant Wash and Disposal System	The PWD system provides decontamination media to the HSH system decontamination tank, pump support package, parts washer and spray lances for equipment decontamination.
RLD	Radioactive Liquid Waste Disposal System	The RLD system receives effluent from the HSH system decontamination tank, parts washer and spray lances and physically interfaces with the sump.
RWH	Radioactive Solid Waste Handling System	The RWH system receives solid waste in waste baskets from the HSH system through the waste transfer port.

3.4.4 Other Technical, Specialty, Operations and Maintenance Requirements

3.4.4.1 Remote Equipment/Component Maintenance and Replacement

3.4.4.1.1 Remote Handling of HSH Equipment

Requirement: The HSH equipment and components identified in Table 3-5 shall be designed with remote handling features for remote recovery, maintenance or replacement. [Section 15.3.5, BOD, ROIN: 8-3509, ROIN: 8-3511][Section 5.2, ORD, ROIN: 1-39929][Section 11.4.4, BOD, ROIN: 8-6562][Section 20, ORD, ROIN: 8-4687][Section 8.1.2, BOD, ROIN: 1-40729][Section 9.12, BOD, ROIN: 1-41030] [Section 11.5.1, BOD, ROIN: 8-3756][Section 14.1, ORD, ROIN: 8-3584][Section 14.8,

ORD, ROIN: 8-4340][Section 11.3.2, BOD, ROIN: 1-41132](F.1, F.1.1, F.1.2, F.1.3, F.1.4, F.1.5, H.1, H.1.1, H.1.2, H.1.3, O.1, P.1)

Table 3-5- Remotely Recoverable, Maintainable or Replaceable Equipment and Components

Equipment/Component Description	Remote Recovery, Maintenance, or Replacement
Cranes	Yes
Power Manipulator Crane	Yes
Lifting Devices	Yes
Hydraulic Power Manipulators	Yes
Master Slave Manipulators	Yes
Shuttle Cart	Yes
Central Vacuum	Yes
Size reducing equipment	Yes
Decontamination tank and components	Yes

Basis Discussion: Remote maintenance operations are generally to be performed in a designated maintenance area. In-cave equipment disassembly, removal to maintenance area, and/or replacement is accomplished by local remote handling equipment or by remote handling equipment in dedicated maintenance areas or caves. In general, process systems and equipment within cells or caves that could fail during operations are designed for safe recovery, replacement, or redundancy. Remote handling features help to facilitate interfacing with equipment or components when using remote handling equipment such as by in-cave cranes, power manipulators, or master-slave manipulators. [ALARA]

Verification: Verification is expected to be achieved through:

Verif. Method	Verif. By	Plan	Notes/Comments
I	**ENG**	Review of design to verify that all HSH replaceable components not recovered by other means are remotely removable.	Document in an evaluation/assessment. Recommend using a software program such as "IGrip" (or similar).
D	**SU/COM**	Demonstrate remotability in accordance with 24590-WTP-PL-RACT-RT-0001, *WTP Remotability Verification Plan.*	Physical demonstration

3.4.4.1.2 Decontamination

Requirement: The HSH equipment located in the C5/R5 area, (e.g., MSM, manipulators, size-reducing tools, etc.,) shall be designed to withstand the decontamination process without any reduction of functionality through degradation of the electrical, mechanical, or any other components involved. [Section 9.1, ORD, ROIN: 8-8065][Section 14.16, ORD, ROIN: 8-475] [Section 6.8, BOD, ROIN: 1-40603][Section 20, ORD, ROIN: 9-56](M.3, O.1, P.1)

Basis discussion: Components located in the C5/R5 area are adequately decontaminated prior to transport to the CMA for maintenance. The processes and media for decontamination are described in

Section 3.6, HSH Decontamination Tank and Associated Piping. This requirement is for equipment that is designed to survive decontamination. [ALARA]

Verification: Verification is expected to be achieved through:

Verif. Method	Verif. By	Plan	Notes/Comments
I	ENG	Review the design to ensure that the equipment requiring decontamination have been specified as such.	Document in an evaluation/assessment
I	ENG	Review Supplier's certificate of conformance (CoC) for HSH SSCs (cranes, manipulators, etc.) to ensure compliance with requirements for decontamination.	Document in an evaluation/assessment

3.4.4.1.3 Remote Operability and Maintenance

Requirement: The HSH in-cave mechanical handling equipment shall be designed to provide the capability for the remote operations, maintenance, and replacement of the equipment listed in Table 3-6 for the in-cave areas. [Section 11.4.1, BOD, ROIN: 1-41153, ROIN: 1-41155, ROIN: 1-41148][Section 5.2, ORD, ROIN: 1-39930] [Section 11.8.3.1, BOD, ROIN: 1-41215] [Section 11.3.2, BOD, ROIN: 1-41134][Section 11.3.2, BOD, ROIN: 1-41132](A.1, A.1.1, A.1.1.1, A.1.1.2, A.1.2, A.1.3, A.2.1, A.2.2, A.2.3, A.3, A.3.2A.4, A.4.1, A.4.2, A.4.3, A.4.4, A.4.4.1, A.4.4.2, A.4.5, B.1, B.1.1, B.1.2, B.1.3, B.2, B.2.1, B.2.2, B.3.1, B.4, B.4.1, B.4.2, B.4.4, B.4.5, E.1, G.1, I.1, I.1.1, I.2, I.3, I.4, I.4.1, I.4.2, J.1, K.1, L.1, M.1, M.2, M.3, N.1, N.2, O.1, P.1, Q.1)

Table 3-6 - In-Cave Components for Remote Operations/Maintenance/Replacement by HSH Equipment

In-Cave Equipment	Remotely Operate	Maintain	Replace
HLW Melter	Y	Y	Y
Melter consumables	N	N	Y
Feed Preparation Vessel	Y	Y	Y
Feed Vessel	Y	Y	Y
SBS	Y	Y	Y
HEME	Y	Y	Y
In-Cave Light Bulbs	N/A	N/A	Y
CCTV Cameras	N/A	N	Y
ADS Pump	N/A	Y	Y
Agitator	N/A	Y	Y
Jumpers	N/A	N/A	Y
False flooring	N/A	N/A	Y

Basis Discussion: The HSH system interfaces with all other systems within the HLW melter cave, crane decontamination area, and crane maintenance area to operate, maintain and/or replace components. [ALARA]

Verification: Verification is expected to be achieved through:

Verif. Method	Verif. By	Plan	Notes/Comments
I	ENG	Review the design of the HSH mechanical handling equipment to verify the capability of remotely operating, maintaining and replacing the equipment and components within the melter cave area.	Document in an evaluation/assessment Recommend using a software program such as "IGrip" (or similar)
D	SU/COM	Demonstrate the capability of remote operation, maintenance and replacement of the equipment and components in the melter cave area using the HSH mechanical handling equipment in accordance with the plan.	Remotability demonstration in accordance with 24590-WTP-PL-RACT-RT-0001

3.4.4.1.4 Permanently Lubricated Components

Requirement: The design of the HSH mechanical handling equipment shall use permanently lubricated, sealed for life components to the extent practicable. [Section 9.1, ORD, ROIN: 8-8066]

Basis Discussion: Permanently lubricated, sealed for life components are used to reduce maintenance requirements that would be performed remotely. [ALARA]

Verification: Verification is expected to be achieved through:

Verif. Method	Verif. By	Plan	Notes/Comments
1	ENG	Review the HSH equipment design to verify that permanently lubricated, sealed for life components are used to the extent practicable.	Document in an evaluation/assessment

3.4.4.2 Startup Testing and Commissioning

Requirement: The HSH system design shall include provisions to support startup and commissioning testing as identified in Appendix A. [Section 11.4.7, 11.5.1, BOD, ROIN: 8-6066, ROIN: 8-3756] [Section 9.1, ORD, ROIN: 8-8067] (I.1, Q.1)

Basis discussion: Additional provisions that are needed to support identified testing are to be accommodated in the design, as jointly determined by Design Agency, Startup and Commissioning during the design development and review process, with consideration given to the tests and demonstration activities required for requirement verification specified in Appendix A. This may include, but is not limited to, provisions to support the introduction or removal of fluids, gases, reagents or simulants; or the availability of special tests ports, sampling ports, or temporary instruments on instrument lines.

Verification: Verification is expected to be achieved through:

Verif. Method	Verif. By	Plan	Notes/Comments
I	ENG	Review design to verify requirement is met based on established tests/demonstrations to be performed during startup and commissioning.	Document in an evaluation/assessment Startup and commissioning to participate in the evaluation/assessment

3.4.4.3 Melter Consumables For Startup

Requirement: The HSH equipment design shall have provisions for the distribution or installation and removal of melter startup materials including the melter frit and melter startup heaters. [Section 11.3.2.1, BOD, ROIN: 1-41135][Section 15.3.1, BOD, ROIN: 8-3496] (I.1, Q.1, Q.1.1, Q.1.2, Q.1.3, Q.1.4)

Basis discussion: This includes installation and removal of initial starter heaters and melter frit.

Verification: Verification is expected to be achieved through:

Verif. Method	Verif. By	Plan	Notes/Comments
I	ENG	Review of design to verify that startup melter replaceable consumables can be remotely installed and removed.	Document in an evaluation/assessment Recommend using a software program such as "IGrip" (or similar)
D	SU/COM	Demonstrate remotability in accordance with 24590-WTP-PL-RACT-RT-0001, *WTP Remotability Verification Plan.*	Physical demonstration

3.4.4.4 Melter Consumables Storage

Requirement: The design shall include fixtures for the storage of the melter consumables for startup and continued operation, e.g., melter frit, bubblers, startup heaters etc. [Section 15.3.1, BOD, ROIN: 8-3496] (I.1.2)

Basis discussion: For startup the melter needs to be loaded with frit and startup heaters. After initial startup, consumables that need to be replenished for continued operation should be safely stored in the melter cave area to preclude excessive opening of the shield doors.

Verification: Verification is expected to be achieved through:

Verif. Method	Verif. By	Plan	Notes/Comments
I	ENG	Review of the design to verify that adequate fixtures are provided for the storage of the melter consumables.	Document in an evaluation/assessment. Operations needs to participate in the review to confirm adequate fixtures are provided

3.5 Cranes, Power Manipulator Crane and Cable Reels

3.5.1 Mission and Functional / Performance Requirements (Including States/Modes)

3.5.1.1 Codes and Standards

Requirement: [HOLD]The bridge cranes shall be designed per CMAA70-2000, *Specifications for Top Running Bridge and Gantry Type Multiple Girder Electric Overhead Traveling Cranes,* augmented with ASME NOG-1-2002, CMAA 74-2000, *Specifications for Top Running and Under Running Single Girder Electric Overhead Traveling Cranes Utilizing Under Running Trolley Hoist,* and ASME NUM 1-2000 (with NUM 1a-2002 Addenda) *Rules for Construction of Cranes: Monorails and Hoists (With Bridge or Trolley or Hoist of the Underhung Type).* [PDSA ESH-01-002-02 Appendix 3A, ROIN: 2-40326][Section 11.8.1, BOD, ROIN 8-8061][Safety Criterion 4.1-2, SRD, ROIN: 1-38651]

Basis discussion: None. This requirement is on hold pending resolution of CR 24590-WTP-GCA-MGT-15-00137 (ATS, 24590-WTP-ATS-MGT-15-0094).

Verification: Verification is expected to be achieved through:

Verif. Method	Verif. By	Plan	Notes/Comments
I	ENG	Review of supplier design of the HSH cranes to ensure compliance to applicable codes and standards.	Document in an evaluation/assessment

3.5.1.2 Lifting Capacity

Requirement: System HSH cranes shall be designed with sufficient capacity to lift the following items, in conjunction with the applicable lifting beams or apparatus. [Section 11.8.3.1, BOD, ROIN: 2-43145][Section 20, ORD, ROIN: 8-4687](A.1.2, B.1.2, B.2.1, B.2.2, B.4.1, C.1, C.1.2, C.2, C.2.2, I.4.1)

Table 3-7 - Crane Capacity

Crane Designation	Lifting Function
Main Melter Crane (HSH-CRN-00001, HSH-CRN-00014)	Large items up to 25-ton
Power Manipulator Crane (HSH-MANIP-00010, HSH-MANIP-00023)	Small items up to 1-ton
Breakdown Area Hoist (HSH-RCVY-00013, HSH-RCVY-00021)	Size reduction equipment, and size reduced components
Decontamination Area Crane (HSH-CRN-00010, HSH-CRN-00012)	Pumps, agitators, melter consumables, decontamination templates
Maintenance Area Crane (HSH-CRN-00011, HSH-CRN-00013)	Import process and mechanical handling equipment, pumps, agitators, melter consumables
Maintenance Pit Jib Crane (HSH-CRN-00015, HSH-CRN-00016)	Hoist maintenance templates

Basis discussion: Cranes are designed with sufficient capacity to complete the heaviest anticipated lift to support operations, maintenance and repair activities over the life of the facility.

Verification: Verification is expected to be achieved through:

Verif. Method	Verif. By	Plan	Notes/Comments
A	ENG	Perform an analysis to determine the heaviest required lift for each crane.	
I	ENG	Review of crane design to verify crane capacity meets or exceeds the heaviest required lift.	Recommended to include in factory acceptance tests. Document in an evaluation/assessment

3.5.1.2.1 In-cell/cave Cranes and Hoists

Requirement: In-cell/in-cave cranes and hoists shall be designed to be of modular construction to facilitate removal and replacement of failed components. In addition, components shall be oriented such that the time for maintenance will be minimized. [Section 14.16, ORD, ROIN: 1-40089][Section 14.16, ORD, ROIN: 8-472][Section 11.8.3.1, BOD, ROIN: 2-43147, ROIN: 2-43159] [Section 11.8.3.1, BOD, ROIN: 2-43146][Section 11.8.3.1, BOD, ROIN: 2-43157](A.1.2, B.1.3, B.2.2)

The components consists of:

- Wheel assemblies
- Hoist gear boxes, motors, and brakes
- Trolley gear boxes, motors, and brakes
- Bridge gear boxes, motors, and brakes

Basis discussion: The basis for this requirement is that equipment with modular construction is easier to maintain. [ALARA]

Verification: Verification is expected to be achieved through:

Verif. Method	Verif. By	Plan	Notes/Comments
I	ENG	Review the design of the in-cave crane and hoists to verify modular construction to facilitate removal and replacement of failed components.	Document in an evaluation/assessment
I	OPS	Review the design of the in-cave cranes and hoists for compliance with maintenance and operation requirements.	

3.5.1.2.2 Standardized Components

Requirement: Standardized and interchangeable components shall be used in the design of the HSH cranes. [Section 14.16, ORD, ROIN: 8-480]

Basis Discussion: Standardized and interchangeable components are used as much as possible to reduce inventory storage and aide in the maintenance program.

Verification: Verification is expected to be achieved through:

Verif. Method	Verif. By	Plan	Notes/Comments
I	ENG	Review the design to verify the use of standard and interchangeable components in the crane design.	Document in an evaluation/assessment

3.5.1.3 Cable Reels

Requirement: The HSH design shall locate the crane cable reeling systems in dedicated maintenance areas. [Section 11.3.2.2, ORD, ROIN: 1-39969][Sections 11.4.1, 11.5.1, BOD, ROIN: 1-41149, ROIN: 8-3755].

Basis Discussion: This feature is also listed in ADR 24590-HLW-ADR-M-02-002. The cable reeling systems are located in maintenance areas so repair can be performed without entering caves. [ALARA].

Verification: Verification is expected to be achieved through:

Verif. Method	Verif. By	Plan	Notes/Comments
I	ENG	Review the design to verify the crane cable reels are located in a dedicated crane maintenance area.	Document in an evaluation/assessment

3.5.1.4 Crane Interference

Requirement: Auxiliary maintenance cranes shall be designed and installed so there is no interference with normal operations of the main melter cave cranes. [Section 11.8.3.1, BOD, ROIN: 2-43149][Section 14.16, ORD, ROIN: 8-471]

Basis discussion: Maintenance functions need to continue while operations are ongoing and not interfere.

Verification: Verification is expected to be achieved through:

Verif. Method	Verif. By	Plan	Notes/Comments
I	ENG	Review the design of the auxiliary maintenance cranes to ensure that proper operations may be performed without interference from the maintenance cranes.	Document in an evaluation/assessment Recommend using a software program such as "IGrip" (or similar)

3.5.1.4.1 Collision Avoidance

Requirement: A collision avoidance system shall be provided on the melter cave 1 and 2 cranes and power manipulator cranes. (W.1.3)

Basis discussion: The main crane and the manipulator crane operate independently and autonomously, but need provisions so that collisions are avoided.

Verification: Verification is expected to be achieved through:

Verif. Method	Verif. By	Plan	Notes/Comments
I	ENG	Review the design to ensure that the proper controls are specified to avoid collisions.	Document in an evaluation/assessment
I	ENG	Review supplier design to ensure appropriate controls to avoid collisions are specified and supplied.	Document in an evaluation/assessment
D	SU/COM	Demonstrate that the cranes collision avoidance system performs the intended function.	Physical demonstration

3.5.1.5 Crane Recovery

Requirement: Recovery features are provided in the equipment designs to retrieve failed cranes to their maintenance area or provisions for in-place maintenance are provided. Maintainable crane components are of modular design with service disconnect to simplify replacement. Features shall be included in the design to retrieve failed cranes to their maintenance areas without a load. [Section 11.8.3.2, BOD, ROIN: 2-43170][Section 14.16, ORD, ROIN: 8-472; ROIN: 8-481][Section 11.3.2, BOD, ROIN: 1-41134][Section 11.4.1, BOD, ROIN: 1-41152][Section 9.12, BOD, ROIN: 1-41032][Section 5.2, ORD, ROIN: 1-39932][Section 9.1, ORD, ROIN: 8-4350] (H.1, H.1.1, H.1.2, H.1.3, W.1.4)

Basis discussion: A crane failure could occur in a C5/R5 area so there needs to be a method to retrieve the crane through the crane decontamination area to the crane maintenance area for repair. Because the crane load could be highly radioactive there needs to be a way to discharge the load prior to the retrieval process. [ALARA]

Verification: Verification is expected to be achieved through:

Verif. Method	Verif. By	Plan	Notes/Comments
I	ENG	Review supplier design to confirm that means for recovery of a failed crane and means of shedding a load have been provided.	Document in an evaluation/assessment
D	SU/COM	Demonstrate remotability in accordance with 24590-WTP-PL-RACT-RT-0001, *WTP Remotability Verification Plan.*	Physical demonstration

3.5.2 Nuclear Safety, ALARA, Environmental and Other Regulatory Requirements

3.5.2.1 Crane Cabling

Requirement: The design shall provide shielded cable troughs on power cables and cable reels which provide a barrier for gross contamination control. [Section 3.3.5.2.2, PDSA, ROIN: 2-18925][Section 5.6.32, PDSA, ROIN: 40-26626]

Basis discussion: This assists in the mitigation of the potential contamination from the melter cave being transported into the CDA or CMA. [ALARA]

Verification: Verification is expected to be achieved through:

Verif. Method	Verif. By	Plan	Notes/Comments
I	ENG	Review the design to ensure that the cable troughs provide an adequate barrier for contamination control.	Document in an evaluation/assessment
I	ENG	Review the design to verify that shielded cable troughs are provided.	Document in an evaluation/assessment

3.5.2.2 Crane Inspections

Requirement: Cranes shall be designed so that in the park position in the crane maintenance area (CMA), inspections can be performed in low radiation/contamination areas and without unsafe interference occurring during the inspections. [Section 11.8.3.1, BOD, ROIN: 2-43150]

Basis discussion: None. [ALARA]

Verification: Verification is expected to be achieved through:

Verif. Method	Verif. By	Plan	Notes/Comments
A	ENG	Verify through analysis that the CMA provides acceptably low radiation levels for maintenance activities.	
I	ENG	Review the design to ensure that when the cranes are parked in the CMA for inspection there is adequate accessibility (without unsafe interference) and the design conforms to the radiation shielding analysis.	Document in an evaluation/assessment

3.5.3 System Interface Requirements

None.

3.5.4 Other Technical, Specialty, Operations and Maintenance Requirements

3.5.4.1 Crane Brakes

Requirement: The cranes shall be designed such that the brakes on all crane drive functions are to set when power is off. [Section 11.8.3.1, BOD, ROIN 2-43153][Section 14.16, ORD, ROIN: 8-478]

Basis discussion: None.

Verification: Verification is expected to be achieved through:

Verif. Method	Verif. By	Plan	Notes/Comments
I	ENG	Review suppliers design to ensure that the design has the brakes engaging when the power is off.	Document in an evaluation/assessment
D	SU/COM	Demonstrate that the brakes on all crane drive functions set when the power is off.	Physical demonstration

3.5.4.2 Crane Lighting

Requirement: The dual beam bridge cranes shall have lights mounted on the crane to illuminate the working area below to the levels identified in IESNA Standard RP-7. [Section 8.6.1.1, 8.6.1.3, 11.8.3.1, BOD, ROIN: 1-40822, ROIN: 1-40829, ROIN: 2-43153] [Section 14.16, ORD, ROIN: 8-479]

Basis discussion: Adequate lighting for in-cave (C3, C5) areas complies with the requirements of IESNA Standard RP-7. Other areas use IESNA Standards RP-1, RP-7, or RP-8 as applicable, where specific lighting levels are not specified elsewhere.

Verification: Verification is expected to be achieved through:

Verif. Method	Verif. By	Plan	Notes/Comments
I	ENG	Review design documentation to ensure lights are mounted on cranes where appropriate, and that the lighting provided complies with IESNA Standards RP-1, RP-7, or RP-8, as applicable.	Document in an evaluation/assessment
T	SU/COM	Measure illumination levels below main melter crane and power manipulator crane to verify that the combined crane/facility lighting complies with IESNA Standard RP-7.	

3.5.4.3 Lubrication Systems

Requirement: Crane lubrication points shall be centralized and accessible to personnel. [Section 11.8.3.1, BOD, ROIN 2-43153] [Section 14.16, ORD, ROIN: 8-486]

Basis discussion: To provide access for maintenance, the lubrication systems on the cranes is centralized and accessible to personnel. The intent is to avoid use of manlifts, scaffolding, or other temporary means of accessing the cranes. Permanently installed work platforms (reference 3.5.4.8) are used for the lubrication of the cranes. [ALARA]

Verification: Verification is expected to be achieved through:

Verif. Method	Verif. By	Plan	Notes/Comments
I	ENG	Review suppliers design to verify that the crane lubrication points are accessible from the permanently installed work platforms.	Document in an evaluation/assessment

3.5.4.4 Quick Connectors

Requirement: The HSH crane modules shall have quick connectors to allow rapid reconnection of cabling or other services. [Section 14.16, ORD, ROIN: 8-469][Section 11.8.3.1, BOD, ROIN: 2-43147].

Basis Discussion: None.

Verification: Verification is expected to be achieved through:

Verif. Method	Verif. By	Plan	Notes/Comments
I	ENG	Review crane design for incorporation of quick connectors.	Document in an evaluation/assessment

3.5.4.5 Emergency Stops

Requirement: The overhead gantry cranes shall have dedicated emergency stop buttons provided near the machinery in the CMA. [Section 7.2.1.5, BOD, ROIN: 8-9083][Section 7.2.1.6, BOD, ROIN: 1-40634A][Section 7.3.9.1, BOD, ROIN: 1-40683][Section 11.12.5.3, ORD, ROIN: 1-40021]

Basis discussion: The facility design for remotely operated cranes provides a crane maintenance area where the crane can be parked for contact maintenance Emergency stops are provided where personnel can be present when the crane is being operated.

Verification: Verification is expected to be achieved through:

Verif. Method	Verif. By	Plan	Notes/Comments
I	ENG	Review the design to verify incorporation of emergency stops in accessible areas near the equipment.	Document in an evaluation/assessment

3.5.4.6 Emergency Stop Reporting and Reset

Requirement: When the E-stops are activated, the equipment shall remain in a shutdown state until the circuit is physically reset to prevent equipment restart while the dangerous condition exists. Each individual E-stop, however configured, shall report its status back to their respective control system. Equipment with MHJ connection shall report E-stop status both to the MHJ and to the local control system. Equipment with no MHJ connection shall only provide E-stop status to the local control system. [Section 11.12.5.3, ORD, ROIN: 8-8287][Section 7.3.9.1, BOD, ROIN: 40-23262, ROIN: 1-40684]

Basis discussion: None.

Verification: Verification is expected to be achieved through:

Verif. Method	Verif. By	Plan	Notes/Comments
I	ENG	Review of design to verify emergency stops capability to report status and to remain in the shutdown state until the circuit is physically reset.	Document in an evaluation/assessment. Ops to participate in or review evaluation/assessment
D	SU/COM	Demonstrate emergency stop reporting and reset functions.	Physical demonstration

3.5.4.7 Crane Decontamination

Requirement: The design of the cranes shall consider crane decontamination and provisions shall be made for use of CO_2, pressurized warm water, detergent solution, or steam without any reduction of functionality through degradation of the electrical, mechanical, or any other components involved. Rotating hooks shall not be degraded because of crane decontamination, therefore, sealed bearings and sealed motors shall be used. [Section 6.8, BOD, ROIN: 1-40603][Section 11.8.3.1, BOD, ROIN 2-

43152][Section 9.1, ORD, ROIN: 8-8065][Section 14.16, ORD, ROIN: 8-474][Section 14.16, ORD, ROIN: 8-475][Section 20.0, ORD, ROIN: 9-56](R.2)

Basis discussion: Prior to the cranes returning to the CMA for maintenance, they undergo decontamination to allow hands-on maintenance and repair. The amount of decontamination that the cranes are subjected to depends on the level of contamination and what is required to bring the contamination level down to allow for hands-on maintenance. [ALARA]

Verification: Verification is expected to be achieved through:

Verif. Method	Verif. By	Plan	Notes/Comments
I	ENG	Review supplier design to ensure that the design of the crane has provisions to protect it from exposure to mass decontamination.	Document in an evaluation/assessment Operations to participate in the review evaluation/assessment

3.5.4.8 Crane Permanent Fixtures

Requirement: In cell and out cell cranes shall have permanently installed fixed ladders or stairs, catwalks or platforms, where space permits. [Section 9.1, ORD, ROIN: 8-494][Section 14.16, ORD, ROIN: 8-485][Section 9.1, ORD, ROIN: 8-495][Section 11.5.1, BOD, ROIN: 8-3757][Section 9.1, ORD, ROIN: 8-8074][Section 10.3.4.6, BOD, ROIN: 1-41105]

Basis discussion: If space does not permit for the installation of permanent fixtures, then on a case-by-case evaluation, temporary attached removable work platforms may be designed and installed. Where necessary manlifts may be used for maintenance, inspection, or access to any equipment installed on the crane.

Verification: Verification is expected to be achieved through:

Verif. Method	Verif. By	Plan	Notes/Comments
I	ENG	Review the design to confirm that the cranes have permanent fixtures where space permits.	Document in an evaluation/assessment

3.5.4.9 Crane Operation

Requirement: The design of the HSH cranes shall have no automation and include the capability to operate the cranes from a remote control room using CCTV monitors or through shield windows by direct observation local operator interface (LOI) and shall not include any on-board logic controls. [Section 14.16, ORD, ROIN: 8-468][Section 14.16, ORD, ROIN: 8-14269][Section 11.8.3.1, BOD, ROIN: 2-43148][Section 14.16, ORD, ROIN: 8-470][Section 14.16, ORD, ROIN: 8-487][Section 14.1, ORD, ROIN: 8-3586][Section 7.2.1.6, BOD, ROIN: 1-40633][Section 14.16, ORD, ROIN: 8-473][Section

7.2.1.6, BOD, ROIN: 1-40634D, ROIN: 1-40634E, ROIN: 1-40634F][Section 7.3.6, BOD, ROIN: 1-40663][Section 14.1, ORD, ROIN: 8-3586] (W.1.3, W.1.6)

Basis discussion: Crane operation can be performed using the crane mounted cameras and CCTV monitors in a control room or when direct observation at the LOI is desired. The maintenance area crane and the maintenance pit jib crane are not required to be operated remotely. [ALARA]

Verification: Verification is expected to be achieved through:

Verif. Method	Verif. By	Plan	Notes/Comments
I	ENG	Review the design to ensure that the proper controls and sequencing are provided for and that the cranes can be operated remotely from various locations.	Document in an evaluation/assessment
D	SU/COM	Demonstrate the capability to operate cranes either from remote control station using CCTV cameras or through shield windows.	Physical demonstration

3.6 HSH Decontamination Tank and Associated piping

3.6.1 Mission and Functional / Performance Requirements (Including States/Modes)

3.6.1.1 Decontamination Tank

Requirement: The decontamination tank shall be sized to accommodate immersion of the melter feed vessel agitator or longest mechanical jumpers. [Section 14.8, ORD, ROIN: 8-7835](R.1)

Basis discussion: None. [ALARA]

Verification: Verification is expected to be achieved through:

Verif. Method	Verif. By	Plan	Notes/Comments
A	ENG	Perform an analysis to determine the size of the decontamination tank to decontaminate the melter feed vessel agitator or longest mechanical jumper that will require decontamination by immersion.	
I	ENG	Review the design to confirm that the size and location of the decontamination tank is appropriate for the planned decontamination tasks.	Document in an evaluation/assessment

3.6.1.2 Piping

Requirement: The design shall incorporate a jumper between the chemical addition pump (HSH-PMP-00003/HSH-PMP-00004) and the inlet to the recirculation pump (HSH-PMP-00001/HSH-PMP-00002) and a plant wash addition jumper into the headspace of the HSH decontamination tank above the overflow level of the tank. [Section 5.6.3, PDSA, ROIN: 40-5426]

Basis discussion: None.

Verification: Verification is expected to be achieved through:

Verif. Method	Verif. By	Plan	Notes/Comments
I	ENG	Review the piping design to confirm the appropriate jumpers and connections are provided.	Document in an evaluation/assessment
D	SU/COM	Demonstrate remote operations of the jumper connections on the pump support package	

3.6.1.2.1 Pipelines Flushing

Requirement: The pipelines carrying contaminated (or potentially contaminated) liquid from the decontamination tank shall be designed to be fully drainable and flushable with no traps or pockets that could accumulate liquids or solids. [Section 20.0, ORD, ROIN: 1-40117, ROIN: 8-4690A][Section 11.4.1, BOD, ROIN: 1-41158]

Basis discussion: The piping provisions for draining and/or pumping fluid prevents lines from plugging and minimizes contamination levels during equipment maintenance and/or replacement, in support of ALARA design objectives. [ALARA]

Verification: Verification is expected to be achieved through:

Verif. Method	Verif. By	Plan	Notes/Comments
I	ENG	Review the design for remote decontamination and flushing/draining capabilities and that the piping is designed to drain with no traps or pockets.	Document in an evaluation/assessment
D	SU/COM	Demonstrate flushing/draining capabilities.	

3.6.1.2.2 Codes and Standards

Requirement: The HSH piping design, fabrication, inspection, and testing of the piping shall be in accordance with ASME B 31.3, *Process Piping*, 1996 edition, as tailored in Appendix C, Section C.26, of the Safety Requirements Document. [Appendix C, SRD, ROIN: 2-22488][Sections 11.4.1, 11.7.6, 11.7.1, 16.4.1.3, BOD, ROIN: 1-41156, ROIN: 45-22820, ROIN: 1-41204, ROIN: 8-5238][Sections 4.3.19.4, 4.4.26.4, PDSA - HLW Facility, ROIN: 40-21402, ROIN: 40-21427].

Basis Discussion: None.

Verification: Verification is expected to be achieved through the following:

Verif. Method	Verif. By	Plan	Notes/Comments
A	ENG	Perform an analysis of the HSH piping design in accordance with ASME B31.3, as tailored in the SRD Appendix C.	Documented in an evaluation/assessment that may be performed using a sampling basis or documented in DVR
I	ENG	Review of design for conformance to the analysis results.	Documented in an evaluation/assessment that may be performed using a sampling basis or documented in DVR

3.6.1.2.3 Utility System Connections

Requirement: The utility system connections to the decontamination tank shall have engineered devices such as air gaps or backflow preventers. [Section 7.1, ORD, ROIN: 8-3578; ROIN: 9-36]

Basis discussion: None.

Verification: Verification is expected to be achieved through:

Verif. Method	Verif. By	Plan	Notes/Comments
I	ENG	Review the design of the decontamination system to verify that the appropriate utility system connections have been specified.	Document in an evaluation/assessment

3.6.1.3 Decontamination

Requirement: The design shall have provisions for manual and remote operated spray nozzles for decontamination using pelitized carbon dioxide, high pressure water, steam, and chemical washing. [Section 14.1, ORD, ROIN: 8-3587][Section 14.8, ORD, ROIN: 8-7836, ROIN: 8-7840][Section 11.4.1, BOD, ROIN: 1-41157][Section 20, ORD, ROIN: 8-4688, ROIN: 8-4689](R.2, R.3)

Basis discussion: Several different media or a combination of media are to be used for decontamination depending on the component size, location, and contamination levels. The decontamination media and method is selected by Operations at the time of decontamination based on compatibility with the SSC material. HSH SSCs are replaceable in the advent of any issue as a result of decontamination.

When the HLW facility has completed its mission function, the HSH decontamination system is used to decontaminate the HLW melter cave area and equipment. [ALARA]

Verification: Verification is expected to be achieved through:

Verif. Method	Verif. By	Plan	Notes/Comments
I	ENG	Review the design of the decontamination system to confirm the provision for using carbon dioxide, high pressure water, steam, and chemicals for decontamination.	Document in an evaluation/assessment
D	SU/COM	Demonstrate remote operations of the decontamination system and discharge of fluids.	Physical demonstration

3.6.2 Nuclear Safety, ALARA, Environmental and Other Regulatory Requirements

3.6.2.1 Decontamination Tank Size

Requirement: The maximum capacity of each of the decontamination tanks shall be limited to 3,718 gallons. [Section III.10.E.9, WTP DWP, ROIN: 40-19464](R.1)

Basis discussion: The capacity limitation is based on the DWP permit conditions. [ALARA]

Verification: Verification is expected to be achieved through:

Verif. Method	Verif. By	Plan	Notes/Comments
I	ENG	Review the design of the decontamination tanks to verify that the maximum capacity is 3,718 gal. in accordance with the DWP permit condition.	Document in as evaluation/assessment

3.6.2.2 Decontamination Tank Emissions

Requirement: The decontamination tank shall be designed to prevent the escape of vapors, fumes, or other emissions into the air. [Section 14.10.1, BOD, ROIN: 9-46] (R.1.1)

Basis Discussion: None. [ALARA]

Verification: Verification is expected to be achieved through the following:

Verif. Method	Verif. By	Plan	Notes/Comments
I	ENG	Review of the design to verify that the decontamination tank prevents the escape of vapors, fumes, or other emmissions into the air.	Document in an evaluation/assessment

3.6.2.3 Decontamination Tank Effluent

Requirement: The design of the decontamination tank shall have provisions for recirculating the decontamination media or transferring to the RLD system. [Section 14.16, ORD, ROIN: 8-474] (R.1.2)

Basis Discussion: The decontamination tank can operate in soak mode or spray mode. When in spray mode the decontamination media is recirculated to the spray heads. When the decontamination tank is drained the effluent is transferred to the RLD system. [ALARA]

Verification: Verification is expected to be achieved through the following:

Verif. Method	Verif. By	Plan	Notes/Comments
I	ENG	Review of the design to verify that the decontamination tank has the capability of recirculating the decontamination media or transferring the effluent to the RLD system.	Document in an evaluation/assessment

3.6.3 System Interface Requirements

3.6.3.1 Plant Wash and Disposal System (PWD) - Decontamination

Requirement: The HSH decontamination vessel shall interface with the PWD for water, with or without nitric acid, for decontamination. [Sections 5.2, 14.1, 20.0, ORD, ROIN: 1-39931, ROIN: 8-3587, ROIN: 8-4682](R.1, R.3)

Basis Discussion: None.

Verification: Verification is expected to be achieved through the following:

Verif. Method	Verif. By	Plan	Notes/Comments
I	ENG	Review of the design to verify the interface between the PWD and HSH decontamination vessel and capability of adding nitric acid for decontamination.	Document in an evaluation/assessment

3.6.3.2 Demineralized Water System (DIW)

Requirement: The HSH decontamination system shall interface with the DIW for water for decontamination. [Sections 5.2, ORD, ROIN: 1-39931] (R.1, R.2, R.3)

Basis Discussion: None.

Verification: Verification is expected to be achieved through the following:

Verif. Method	Verif. By	Plan	Notes/Comments
I	ENG	Review of the design to verify the interface between the DIW and HSH decontamination system.	Document in an evaluation/assessment

3.6.3.3 High Pressure Steam System (HPS)

Requirement: The design of the HSH decontamination system shall have provisions for using high pressure steam for the heating of the decontamination tank. [Section 11.8.3.1, BOD, ROIN: 2-43152] [Section 14.8, ORD, ROIN: 45-20425] (R.1, R.2, R.3)

Basis Discussion: The decontamination tanks have heating capability to allow hot soak of contaminated components at elevated temperatures.

Verification: Verification is expected to be achieved through the following:

Verif. Method	Verif. By	Plan	Notes/Comments
I	ENG	Review of the design to verify the interface between the HPS and HSH decontamination system.	Document in an evaluation/assessment

3.6.3.4 Radioactive Liquid Waste Disposal System (RLD)

Requirement: The design of the HSH decontamination system shall interface with the RLD system for the discharge from the decontamination tank. (R.1.2)

Basis Discussion: The decontamination of equipment and components results in contaminated waste liquid that needs to be disposed.

Verification: Verification is expected to be achieved through the following:

Verif. Method	Verif. By	Plan	Notes/Comments
I	ENG	Review of the design to verify the interface between the RLD and HSH decontamination system.	Document in an evaluation/assessment
D	SU/COM	Demonstrate transfer of HSH decontamination tank contents to the RLD system.	Physical demonstration

3.6.3.5 Instrument Service Air System (ISA)

Requirement: The design of the decontamination tank shall interface with the non-safety ISA for sparging of the tank when required. [Section 4.3.23.1, PDSA, ROIN: 45-31533] (R.1, R.2, R.3)

Basis Discussion: The decontamination factor may be increased when soaking by sparging the tank with compressed air.

Verification: Verification is expected to be achieved through the following:

Verif. Method	Verif. By	Plan	Notes/Comments
I	ENG	Review of the design to verify the interface between the ISA and HSH decontamination system.	Document in an evaluation/assessment
D	SU/COM	Demonstrate sparging of the HSH decontamination tank.	Physical demonstration

3.6.4 Other Technical, Specialty, Operations and Maintenance Requirements

3.6.4.1 Decontamination Tank Inspection

Requirement: The decontamination tank shall be designed to support remote inspections to check for leaks due to corrosion or other events. [Section 14.10.1.5, BOD, ROIN: 1-41521, ROIN: 8-6350, ROIN: 8-6352]

Basis discussion: The decontamination tank is in a C5 area, therefore, remote inspections are to be performed to assess the integrity of the tank and system by viewing through shield windows and/or by CCTV. [ALARA]

Verification: Verification is expected to be achieved through:

Verif. Method	Verif. By	Plan	Notes/Comments
I	ENG	Verify that the decontamination tank is designed to allow for remote inspections using the shield windows and/or CCTVs.	Document in an evaluation/assessment
D	SU/COM	Demonstrate the ability to inspect the decontamination tank using a combination of shield windows and/or CCTV.	Physical demonstration

3.6.4.2 Remote Valves

Requirement: Remote operation of valves shall be provided where accessibility is difficult, and for valves used in routine operations. [Section 14.4, ORD, ROIN: 1-40069]

Basis discussion: The decontamination tank is in a C5 area, therefore, remote valve operation is required. [ALARA]

Verification: Verification is expected to be achieved through:

Verif. Method	Verif. By	Plan	Notes/Comments
I	ENG	Verify that the decontamination tank is designed to allow for remote operation of valves.	Document in an evaluation/assessment
D	SU/COM	Demonstrate the ability to operate the remote valves.	Physical demonstration

3.7 Posting Port and Glovebox

3.7.1 Mission and Functional / Performance Requirements (Including States/Modes)

3.7.1.1 Glovebox Internal Pressure

Requirement: The glovebox (in conjunction with normal operation of the facility ventilation systems) shall be capable of maintaining a negative pressure relative to its room location. [Section 14.15, ORD, ROIN: 40-9971][Section 4.2-1, SRD, ROIN: 1-38663][Section 5.1.2, BOD, ROIN: 1-40438].

Basis discussion: Air is drawn through the glovebox and into the melter cave, by the facility ventilation system. The glovebox regulate this airflow to maintain a negative pressure in the glovebox relative to the room in which it resides, including while the glovebox airlock and posting port doors are open in any of the configurations allowed by the local control station and interlocks. [ALARA]

Verification: Verification is expected to be achieved through:

Verif. Method	Verif. By	Plan	Notes/Comments
I	ENG	Review the design for an ability to maintain a negative internal pressure, relative to the surrounding room, through regulation of ventilation air flowing through the glovebox and into the melter cave.	Document in an evaluation/assessment
D	SU/COM	Verify that, in conjunction with normal operation of the facility ventilation systems, the glovebox can maintain a negative pressure relative to the room it resides in.	

3.7.1.2 Glovebox Construction

Requirement: There shall be no sharp edges or the potential to generate sharp edges within a glovebox. [Section 14.15, ORD, ROIN: 40-9968]

Basis discussion: The basis for this requirement is to preclude tearing or snagging a glove resulting in a breach of the glovebox confinement boundary.

Verification: Verification is expected to be achieved through:

Verif. Method	Verif. By	Plan	Notes/Comments
I	ENG	Review the design of the glovebox to confirm that the design does not contain any sharp edges that could potentially tear or snag the glovebox flexible material.	Document in an evaluation/assessment
I	CON	Inspect the glovebox construction to confirm that the design requirements are met.	Document in an inspection report

3.7.1.3 Glovebox Human Interface

Requirement: The glovebox and posting port shall be located to penetrate the melter cave C5 area and take into account human performance interactions. Maintainable items shall be accessible for maintenance. [Section 14.15, ORD, ROIN: 1-40088, ROIN: 40-9965, ROIN: 40-9967, ROIN: 40-9966] (D.1)

Basis discussion: The posting port and glovebox are used to transport small tools and components into the melter cave area.

Verification: Verification is expected to be achieved through:

Verif. Method	Verif. By	Plan	Notes/Comments
I	ENG	Review the location and design of the glovebox to confirm that the design considers all human performance interactions and is suitable for its intended purpose.	Document in an evaluation/assessment
D	SU/COM	Demonstrate the ability to perform the maintenance activities.	Physical demonstration

3.7.1.4 Posting Port

Requirement: The posting port shall be designed to allow for the transfer of small tools or components that can fit within its confines and can be retrieved by the MSMs between the accessible manned areas and the C5 melter area. [Section 4.4.22.2, PDSA, ROIN: 45-32013, ROIN: 45-32017](D.1)

Basis discussion: Posting ports allow the transfer of materials between manned accessible operating areas and high-dose, high-contamination areas. The posting ports consist of a transport tray, in-cave and out-cave shield doors, interlocks, and is connected to a glovebox. [ALARA]

Verification: Verification is expected to be achieved through:

Verif. Method	Verif. By	Plan	Notes/Comments
I	ENG	Review the design and location of the posting port to confirm that it is located such that it can be used to transport small items from a manned area to the melter cave area.	Document in an evaluation/assessment

3.7.1.5 Measuring Contamination Levels

Requirement: The HSH glovebox shall provide the capability to import and use portable instruments or probes within the glovebox, including those used to measure the contamination levels of swabs or components that have been brought into the glovebox.

Basis Discussion: Preliminary or go/no-go contamination measurements may be taken inside the glovebox using small portable instruments.

Verification: Verification is expected to be achieved through:

Verif. Method	Verif. By	Plan	Notes/Comments
I	ENG	Review the design to verify the capability to import and use portable instruments within the glovebox.	Document in an evaluation/assessment
D	SU/COM	Demonstrate the ability to import and use portable instruments within the glovebox.	

3.7.2 Nuclear Safety, ALARA, Environmental and Other Regulatory Requirements

3.7.2.1 Glovebox Fire Protection

Requirement: Posting ports and gloveboxes shall be provided with ember screens and automatic sprinkler systems. [Section 4.1.11, PFHA, ROIN: 40-28701]

Basis Discussion: None.

Verification: Verification is expected to be achieved through:

Verif. Method	Verif. By	Plan	Notes/Comments
I	ENG	Review of design to verify that the posting ports and gloveboxes are equipped with ember screens and autormatic sprinklers.	Document in an evaluation/assessment

3.7.3 System Interface Requirements

None.

3.7.4 Other Technical, Specialty, Operations and Maintenance Requirements

3.7.4.1 Glovebox Piping

Requirement: The glovebox shall be designed to preclude the use of braided metal hosing, glass, or plastic, and minimize the volume of active pipe work. [Section 11.7.4, BOD, ROIN: 2-43142][Section 14.15, ORD, ROIN: 40-9969, ROIN: 40-9973, ROIN: 40-9976]

Basis discussion: Glovebox materials are selected that are easily decontaminated and minimize potential for contamination accumulation. [ALARA]

Verification: Verification is expected to be achieved through:

Verif. Method	Verif. By	Plan	Notes/Comments
I	ENG	Review the design to confirm that braided metal hosing, glass, or plastic have not been specified in the glovebox design.	Document in an evaluation/assessment

3.8 Below the Hook Lifting Apparatus and Tools

3.8.1 Mission and Functional / Performance Requirements (Including States/Modes)

3.8.1.1 Lifting Beams, Yokes, etc.

Requirement: Lifting beams, yokes, and fixtures for the installation, repair and removal of in-cave equipment shall be designed to be multi-use in that single lifting fixtures could be used to perform a number of different duties. [Section 14.8, ORD, ROIN: 8-4344][Section 11.4.5, BOD, ROIN: 8-6558][Section 14.16, ORD, ROIN: 8-482] (B.2.2, B.4.1)

Basis discussion: There is a limited amount of space in the melter cave areas for storage of equipment, therefore, components are to be designed for multi-use as much as practical.

Verification: Verification is expected to be achieved through:

Verif. Method	Verif. By	Plan	Notes/Comments
I	ENG/OPS	Review the design and confirm that the lifting fixtures are designed with the most flexibility as practical.	Document in an evaluation/assessment
D	SU/COM	Demonstrate that the designed lifting fixtures can perform their intended functions in accordance with 24590-WTP-PL-RACT-RT-0001, *WTP Remotability Verification Plan.*	Physical demonstration

3.8.1.2 Tools for Remote Equipment Disassembly

Requirement: The design shall include the manipulator operated tools necessary for remote disassembly of the HLW melter, melter feed vessel, melter feed preparation vessel, HEME, SBS, jumpers, melter bus and for the removal and replacement of in-cave lights and cameras. (A.1, A.1.1, A.1.1.1, A.1.1.2, A.1.2, A.1.3, A.4, A.4.1, A.4.2, A.4.3, A.4.4, A.4.4.1, A.4.4.2, B.1, B.1.2, B.1.3, B.4, B.4.2, B.4.4, E.1, F.1, F.1.1, F.1.2, F.1.3, F.1.4, F.1.5, G.1, I.1, I.2, I.4, I.4.1, J.1, K.1, L.1, M.1, M.2, M.3, N.1, N.2, O.1, P.1)

Basis discussion: Types of equipment to be assembled/disassembled include melter bus import hanger, melter bus plug jack, melter lid handling equipment, electrical and piping jumpers, melter bubblers, vessels, and etc.

Verification: Verification is expected to be achieved through:

Verif. Method	Verif. By	Plan	Notes/Comments
I	ENG/OPS	Review the design of the SSCs within the melter cave and verify that there are appropriate tools for the remote assembly and disassembly of those SSCs.	Document in an evaluation/assessment
D	SU/OPS	Demonstrate that the remote operated tools, (e.g., nutrunners, impact wrenches, yokes, extension hooks, fixtures, etc.) are available within the melter cave and are functionally able to perform the required functions in accordance with 24590-WTP-PL-RACT-RT-0001, *WTP Remotability Verification Plan*.	Physical demonstration

3.8.2 Nuclear Safety, ALARA, Environmental and Other Regulatory Requirements

3.8.2.1 In-Cell Equipment Surface Finish

Requirement: In-cell equipment shall be designed with appropriate surface finish or have protective coating/sealant to allow wet decontamination of surfaces with water, dilute nitric acid, and/or dilute caustic solutions without damaging the coated surface. [Section 13.4, ORD, ROIN: 1-40058K]

Basis discussion: Lifting hooks and other in-cell equipment may be designed with either stainless steel material, with the appropriate surface finish, or with appropriate protective coating. [ALARA]

Verification: Verification is expected to be achieved through:

Verif. Method	Verif. By	Plan	Notes/Comments
I	ENG/OPS	Review the design of the in-cell equipment to verify that appropriate material surface finish and/or coating/sealing is used.	Document in an evaluation/assessment

3.8.3 System Interface Requirements

None.

3.8.4 Other Technical, Specialty, Operations and Maintenance Requirements

None.

3.9 Manipulators (Master Slave & Powered)

3.9.1 Mission and Functional / Performance Requirements (Including States/Modes)

3.9.1.1 Master Slave Manipulators (MSMs)

Requirement: The MSMs shall be designed and located to perform remote handling, size reduction operations, and in-cave maintenance of the melter cave equipment. [Section 11.4.1, BOD, ROIN: 1-41155][Section 11.4.5, BOD, ROIN: 8-6553, ROIN: 8-6557][Section 9.2, ORD, ROIN: 8-9095CD]

Basis discussion: In-cave maintenance is accomplished with through-wall manipulators. MSMs provide remote manipulation of tools and equipment at cave face shield window stations. [ALARA]

Verification: Verification is expected to be achieved through:

Verif. Method	Verif. By	Plan	Notes/Comments
I	ENG/OPS	Review the design to confirm that the manipulators are located in positions to perform the intended functions.	Document in an evaluation/assessment with Ops participation
D	SU/COM	Demonstrate that the master slave manipulators can be used to perform the remote installation, maintenance, removal, and disposal of the in-cave equipment in accordance with 24590-WTP-PL-RACT-RT-0001, *WTP Remotability Verification Plan.*	Physical demonstration

3.9.1.2 Hydraulic Power Manipulators (HPMs)

Requirement: The design shall include hydraulic power manipulators designed and located to perform remote handling, size reduction operations, and in-cave maintenance of the melter cave equipment with a load capacity rating of 150 lbs. [Section 11.4.1, BOD, ROIN: 1-41155] [Section 11.4.5, BOD, ROIN: 8-6553, ROIN: 8-6557][Section 9.2, ORD, ROIN: 8-9095CD]

Basis discussion: The hydraulic power manipulators are used to load heavier size reduced melter consumable components into solid waste baskets and perform general maintenance activities in the melter cave. [ALARA]

Verification: Verification is expected to be achieved through:

Verif. Method	Verif. By	Plan	Notes/Comments
I	ENG/OPS	Review the design to verify that the HPMs have a load capacity rating of 150 lbs and are located in positions to perform the intended functions.	Document in an evaluation/assessment with Ops participation
D	SU/COM	Demonstrate that the hydraulic power manipulators can be used to perform the remote installation, maintenance, removal, and disposal of the in-cave equipment in accordance with 24590-WTP-PL-RACT-RT-0001, *WTP Remotability Verification Plan.*.	Physical demonstration

3.9.1.3 Manipulator Recovery

Requirement: MSMs and HPMs shall be designed to allow for removal and transport to decontamination/maintenance areas and placement in a storage area for repair/replacement. [Section 9.2, ORD, ROIN: 8-9095A] [Section 9.2, ORD, ROIN: 8-9095B][Section 5.2, ORD, ROIN: 1-39932] (H.1, O.1, P.1)

Basis discussion: In case of failure, the manipulators need to be remotely removable and replaceable. [ALARA]

Verification: Verification is expected to be achieved through:

Verif. Method	Verif. By	Plan	Notes/Comments
D	SU/COM	Demonstrate capability of removal and transfer of MSMs and HPMs to designated maintenance area.	Physical demonstration

3.9.2 Nuclear Safety, ALARA, Environmental and Other Regulatory Requirements

None.

3.9.3 System Interface Requirements

None.

3.9.4 Other Technical, Specialty, Operations and Maintenance Requirements

None.

3.10 Shield Doors, Lids and Shield Windows

3.10.1 Mission and Functional / Performance Requirements (Including States/Modes)

3.10.1.1 Engineered Air Gap

Requirement: The HSH horizontal and vertical shield doors (HSH-DOOR-00001 through HSH-DOOR-00008) shall provide an engineered air gap which, in conjunction with the facility ventilation system, is capable of maintaining a minimum perimeter airflow velocity of 200 feet per minute. [Section 7.1, ORD, ROIN: 8-489][Sections 4.3.9.2, 4.3.9.3, 4.3.9.4, 4.4.1.3, 4.4.1.4, Tables A-1, A-2, PDSA, ROIN: 40-11532, ROIN: 40-11535][Section 4.4.1, PDSA, ROIN: 2-46201][Section 4.4.1.1, PDSA, ROIN: 1-21615A][Sections 5.1.2, 11.8.3.1, 12.3.2, BOD, ROIN: 1-40438, ROIN: 1-40441, ROIN: 2-43160, ROIN: 8-15078] (X.1, X.2)

Basis Discussion: An engineered air gap helps to control the spread of contamination and to maintain the cascading airflow from areas of low contamination to areas of higher contamination. [ALARA]

Verification: Verification is expected to be achieved through:

Verif. Method	Verif. By	Plan	Notes/Comments
A	ENG	Perform an analysis to verify that the minimum perimeter air flow velocity of 200 fpm around the shield door is met.	
I	ENG	Review the door design to verify conformance to engineered air gap requirement analysis.	Document in an evaluation/assessment
I	CON	Inspect installation to verify conformance to engineered air gap requirements.	Document in an evaluation/assessment

3.10.1.2 Replaceable Seals

Requirement: SPADs shall have replaceable seals. [Section 4.3.1.2, 4.3.9.3, PDSA, ROIN: 1-21509, ROIN: 40-11535].

Basis Discussion: The seals on SPADs are hands-on replaceable when they when they need to be replaced.

Verification: Verification is expected to be achieved through:

Verif. Method	Verif. By	Plan	Notes/Comments
I	ENG	Review the design for incorporation of replaceable seals including supplier documentation to ensure seal maintenance instructions are provided.	Document in an evaluation/assessment

3.10.1.3 Locking Devices

Requirement: Physical locking devices or electronic lockouts shall be present on the shield doors and SPADs. [Section 5.6.12, PDSA, ROIN: 40-26625][Section 4.4.22, PDSA, ROIN: 2-41351, ROIN: 2-41353][Section 11.8.3.1, BOD, ROIN: 2-43161, ROIN: 2-43164][Section 4.4.22.3, PDSA, ROIN: 45-32043]

Basis Discussion: Locks provide a physical barrier to prevent the unauthorized or inadvertent entry into areas of potential high radiation and contamination. Physical locks can also be applied to equipment that may include electrical power sources or controls. [ALARA]

Verification: Verification is expected to be achieved through:

Verif. Method	Verif. By	Plan	Notes/Comments
I	ENG	Review the design for incorporation of physical locking devices or electronic lockouts.	Document in an evaluation/assessment. Plant Engineering to participate or review evaluation/assessment report.

3.10.1.4 Shielded Personnel Access Door (SPADs) (HSH-DOOR-00013, 00015-00019)

Requirement: The SPADs shall fully seal against their mating surface to maintain the C5V boundary. [Section 4.3.9.2, PDSA, ROIN: 40-11532, ROIN: 40-11533][Section 5.6.12, PDSA, ROIN: 40-11539C, ROIN: 40-11539D](V.1)

Basis discussion: The SPADs maintain confinement of the C5V boundary by ensuring that, when the doors are closed, they seal to restrict air from leaking out of the maintenance/decontamination areas. They also control personnel access to areas with high-radiation sources with the use of locks and administrative controls. [ALARA]

Verification: Verification is expected to be achieved through:

Verif. Method	Verif. By	Plan	Notes/Comments
I	ENG	Review the design to confirm that the SPADs specify that the mating surface be fully sealed when closed.	Documented in a DVR
I	CON	Inspect SPAD installation to verify fully seated mating surfaces.	Document in an evaluation/assessment

3.10.1.4.1 SPADs Operation

Requirement: The design of the SPADs assembly shall permit simultaneous control of contamination and routing of breathing air hoses. [Section 11.8.3.1, BOD, ROIN: 2-43164, ROIN: 2-43165, ROIN: 2-43167][Section 7.1, ORD, ROIN: 8-1263](V.1)

Basis discussion: The door design supports personnel access using air lines while minimizing potential for contamination spread. [ALARA]

Verification: Verification is expected to be achieved through:

Verif. Method	Verif. By	Plan	Notes/Comments
I	ENG	Review the design to ensure appropriate contamination control is specified and that provisions are made for the routing of breathing air hoses.	Document in an evaluation/assessment

3.10.1.5 Equipment Confinement Doors (segregate C5/C3 areas from C3/C2 areas)

Requirement: The equipment confinement doors are designed to be of modular construction to facilitate quick removal and replacement of failed components. The modules shall have quick connectors on flying leads to allow rapid reconnection of cabling or other services. [Section 11.8.3.1, BOD, ROIN: 2-43163, ROIN: 2-43167] (X.1, X.2)

Basis discussion: The modular construction aides in the ease and timeliness of the removal and replacement of door components, and helps minimize the potential spread of contamination to reduce worker exposure. [ALARA]

Verification: Verification is expected to be achieved through:

Verif. Method	Verif. By	Plan	Notes/Comments
I	ENG	Review the design to ensure that design contains quick connectors and is as modular as practical.	Document in an evaluation/assessment

3.10.1.6 Shield Windows Protective Barrier

Requirement: Shield windows that could be credibly impacted by crane-held loads shall be equipped with a protective barrier on the hot side of the window capable of withstanding the bounding impact from a crane-held swinging or rotating load. [Section 4.4.1.1, PDSA, ROIN: 40-11649][Section 4.4.1.3, PDSA, ROIN: 45-1087][Section 4.4.1.4, PDSA, ROIN: 45-1088][Section 5.3.2.16, PDSA, ROIN: 2-46183][Section 5.6.16, PDSA, ROIN: 45-1100] (E.1)

Basis discussion: The intent of this requirement is to ensure that the shield windows are not breached due to impacts from routine activities.

Verification: Verification is expected to be achieved through:

Verif. Method	Verif. By	Plan	Notes/Comments
A	ENG	Perform an analysis to determine the shield windows that could potentially be impacted by crane-held load.	
I	ENG	Review the design to confirm that adequate protective barriers are included.	Document in an evaluation/assessment

3.10.2 Nuclear Safety, ALARA, Environmental and Other Regulatory Requirements

3.10.2.1 Shielding Requirements

Requirement: Shield doors shall be designed to provide adequate shielding during normal and off normal operations to reduce personnel exposure to levels acceptable within the Radiation Protection Program. [Section 4.4.1, PDSA, ROIN: 2-46201, ROIN: 1-21614] [Section 4.4.1.1, PDSA, ROIN: 1-21615A][Section 4.4.1.3, PDSA, ROIN: 1-21617A][Section 5.1.1, BOD, ROIN: 1-40436][Section 5.6.12, PDSA, ROIN: 40-11539A][Section 11.8.3.1, BOD, ROIN: 2-43160] (X.1)

Basis discussion: The shield doors are a safety feature and provide a radiation shielding function, a contamination containment function and should be designed to withstand impact from crane loads. [ALARA]

Verification: Verification is expected to be achieved through:

Verif. Method	Verif. By	Plan	Notes/Comments
A	ENG	Perform an analysis to determine the appropriate material and thickness requirements to provide shielding in the CDA and CMA.	
I	ENG	Review the design to verify that the shield doors and hatches conform to the analysis.	Document in an evaluation/assessment

3.10.2.2 Decontamination Pit Shield Lids

Requirement: The Decontamination pit shall have a shield lid designed to provide shielding to protect personnel from contamination and radiation. [Section 4.4.1, PDSA, ROIN: 1-21614] (X.1)

Basis discussion: The shield lids are to maintain adequate shielding during credible accident events. [ALARA]

Verification: Verification is expected to be achieved through:

Verif. Method	Verif. By	Plan	Notes/Comments
A	ENG	Perform analysis to determine appropriate material and thickness for shielding.	
I	ENG	Review design to verify compliance with the analysis.	Document in an evaluation/assessment

3.10.3 System Interface Requirements

None.

3.10.4 Other Technical, Specialty, Operations and Maintenance Requirements

3.10.4.1 Shield Doors Decontamination

Requirement: The shield doors shall be designed to withstand decontamination by any of the decontamination media. [Section 7.1, ORD, ROIN: 8-488]

Basis discussion: The shield doors are subjected to the contamination fluids from the decontamination of retrieved components in the CDA. Also, the shield doors are decontaminated prior to manned entry in the CDA and for any hands-on maintenance. The processes and media for decontamination are described in Section 3.6, HSH Decontamination Tank and Associated Piping. [ALARA]

Verification: Verification is expected to be achieved through:

Verif. Method	Verif. By	Plan	Notes/Comments
I	ENG	Review shield door design to verify materials or coatings applied to shield door panels support ease of decontamination.	Document in an assessment or ALARA design review. Rad Engineering to participate.

3.10.4.2 Shield Door Recovery

Requirement: Recovery devices are capable of being safely fitted to close all doors that cannot be safely accessed when open, if they are inoperable due to any credible equipment failure scenario. [Section 11.8.3.1, BOD, ROIN: 2-43162][Section 5.2, ORD, ROIN: 1-39932]

Basis discussion: In the event of off-normal event or failure of normal drive mechanism, the shield doors are capable of being closed to maintain their safety function.

Verification: Verification is expected to be achieved through:

Verif. Method	Verif. By	Plan	Notes/Comments
I	ENG	Review the design to verify the presence of recovery devices on the shield doors.	Document in an evaluation/assessment
D	SU/COM	Demonstrate recovery capability of the shield doors using a recovery device.	Physical demonstration

3.10.4.3 Mounting for Shield doors and Shield Windows

Requirement: The structural mounting components of the shield doors and shield windows are designed in accordance with DOE-STD-1020-94, ANSI/AISC N690, and AISC M016. [Section 4.4.1.4, PDSA, ROIN: 45-31547].

Basis Discussion: This applies to all of the HSH shield doors and windows.

Verification: Verification is expected to be achieved through:

Verif. Method	Verif. By	Plan	Notes/Comments
I	ENG	Review vendor submittals to verify design of shield door and shield window structural components conforms to required codes and standards.	Document in an evaluation/assessment

3.10.4.4 Drives for Shield Doors

Requirement: Drives for the shield doors shall be located outside of the melter cave boundary. [Sections 11.4.1, BOD, ROIN: 1-41149][Section 11.8.3.1, BOD, ROIN: 2-43161, ROIN: 2-43164, ROIN: 2-43165].

Basis Discussion: To prevent maintenance workers from being exposed to contaminated equipment or radiation sources, the drives for the shield doors are located outside of the melter cave boundary. [ALARA]

Verification: Verification is expected to be achieved through:

Verif. Method	Verif. By	Plan	Notes/Comments
I	ENG	Review the design to verify that the hatch and shield door drives are located outside of melter cave boundaries.	

3.11 Central Vacuum System

3.11.1 Mission and Functional / Performance Requirements (Including States/Modes)

3.11.1.1 Contamination Control

Requirement: A central vacuum system shall be provided to accommodate good housekeeping practices and provide for the containment of the anticipated accumulation of contamination. [Section 5.1.2, BOD, ROIN: 1-40442][Section 11.4.1, BOD, ROIN: 1-41157][Section 14.11, ORD, ROIN: 1-40076](R.5, R.5.1, R.5.2, R.5.3)

Basis Discussion: A Central vacuum system is used to reduce gross contamination on equipment, within the cave and for collection of contamination at areas where size reduction is taking place. [ALARA]

Verification: Verification is expected to be achieved through the following:

Verif. Method	Verif. By	Plan	Notes/Comments
I	ENG	Review of design to verify that the central vacuum system can provide for the gross decontamination of the equipment and cave.	Document in an evaluation/assessment

3.11.1.2 Designed for Remote Operations

Requirement: The central vacuum system shall be designed for remote operations and for accessing the areas to retrieve glass shards and contamination particles using various remotely removable attachments. [Section 11.4.1, BOD, ROIN: 1-41148][Section 5.1.2, BOD, ROIN: 1-40442]

Basis Discussion: In-cell and in-cave operations are performed remotely. The design incorporates features to facilitate this mode of operation. [ALARA]

Verification: Verification is expected to be achieved through the following:

Verif. Method	Verif. By	Plan	Notes/Comments
I	ENG	Review of design to ensure that the central vacuum system is designed for remote operations.	Document in an evaluation/assessment
D	SU/COM	Demonstrate remotability in accordance with 24590-WTP-PL-RACT-RT-0001, *WTP Remotability Verification Plan.*	Physical demonstration

3.11.2 Nuclear Safety, ALARA, Environmental and Other Regulatory Requirements

3.11.2.1 Vacuum System Recovery

Requirement: The central vacuum system and attachments shall be designed to be recoverable remotely and transportable through decontamination to the maintenance area for general maintenance and repair. [Section 11.3.2, BOD, ROIN: 1-41129][Section 5.2, ORD, ROIN: 1-39932] [Section 8.1.3, ORD, ROIN: 1-39963]

Basis Discussion: The central vacuum system like all HSH equipment needs to be recoverable for maintenance and repair or in the event of equipment failure. [ALARA]

Verification: Verification is expected to be achieved through the following:

Verif. Method	Verif. By	Plan	Notes/Comments
I	ENG	Review the design to verify that the central vacuum system is designed for remote recovery.	Document in an evaluation/assessment
D	SU/COM	Demonstrate the ability to remotely transfer the central vacuum skid to the crane maintenance area and to remotely transfer the central vacuum skid back to its designated location in the melter cave in accordance with test plans developed by the Commissioning Remote Handling work group per 24590-WTP-PL-RACT-RT-0001, *WTP Remotability Verification Plan.*	Physical demonstration

3.11.3 System Interface Requirements

None.

3.11.4 Other Technical, Specialty, Operations and Maintenance Requirements

None.

3.12 Transfer Cart System

3.12.1 Mission and Functional / Performance Requirements (Including States/Modes)

3.12.1.1 Vessel Transfer Cart

Requirement: The Vessel Transfer Cart shall be designed to transport replacement melter cave equipment and process vessels into and out of the melter cave area. [Section 11.8.3.1, BOD, ROIN: 2-43155](B.2, B.2.2, B.2.3, B.3.1, B.3.2, B.4.3, C.1.1)

Basis Discussion: The vessel transfer cart remotely transports replacement components such as the melter cave equipment and HFP feed vessels.

Verification: Verification is expected to be achieved through the following:

Verif. Method	Verif. By	Plan	Notes/Comments
I	ENG	Review of design to ensure that the vessel transfer cart system is designed for remote operations.	Document in an assessment
D	SU/COM	Demonstrate remotability in accordance with 24590-WTP-PL-RACT-RT-0001, *WTP Remotability Verification Plan.*	Physical demonstration

3.12.1.2 Transfer Cart Rails

Requirement: The vessel transfer cart shall be designed to use the HMH rails and the melter cave import/export rails. [Section 11.8.3.1, BOD, ROIN: 2-43155]

Basis Discussion: The vessel transfer cart imports items into the C2/C3 area on the HMH rails for subsequent hoisting to the CMA using the CMA hoist. The vessel transfer cart is also used to export items from the C2/C3 area using the HMH rails. Vessels and other large pieces are transferred to the C3/C5 airlock shield door and the vessel transfer cart imports/exports items into and out of the melter cave on the melter cave rails.

Verification: Verification is expected to be achieved through the following:

Verif. Method	Verif. By	Plan	Notes/Comments
I	ENG	Review of the design to ensure that the vessel transfer cart is compatible with the HMH rails and the melter cave rails.	Document in an evaluation/assessment

3.12.1.3 Shuttle Cart

Requirement: The Shuttle Cart shall be designed to transport components (e.g., bubblers, agitators, motors and gearboxes), from the CMA through the CDA. [Section 11.8.3.1, BOD, ROIN: 2-43155] (C.2, C.2.1)

Basis Discussion: Transport of components to and from the CMA and CDA are performed using the shuttle cart in lieu of the main cranes to save wear and tear and minimize the decontamination process on the main cranes.

Verification: Verification is expected to be achieved through the following:

Verif. Method	Verif. By	Plan	Notes/Comments
I	ENG	Review of design to verify the capability of the shuttle cart to transport the components.	Document in an evaluation/assessment

3.12.1.4 Remote Operations

Requirement: The vessel transfer cart and shuttle cart shall be designed to be operated remotely. [Section 11.4.1, BOD, ROIN: 1-41148][11.4.1, BOD, ROIN: 1-41155] (B.4.3, C.1.1, C.2.1)

Basis Discussion: In-cell and in-cave operations are performed remotely. The design incorporates features to facilitate this mode of operation. [ALARA]

Verification: Verification is expected to be achieved through the following:

Verif. Method	Verif. By	Plan	Notes/Comments
I	ENG	Review of design to ensure that the transfer cart system is designed for remote operations.	Document in an evaluation/assessment
D	SU/COM	Demonstrate remotability in accordance with 24590-WTP-PL-RACT-RT-0001, *WTP Remotability Verification Plan.*	Physical demonstration

3.12.1.5 Recovery of Vessel Transfer Cart

Requirement: The design of the HSH vessel transfer cart shall include backup/recovery provisions under maximum loading conditions. [Section 7.1, ORD, ROIN: 8-3582] [Section 11.4.1, BOD, ROIN: 1-41153, ROIN: 1-41155][Section 11.3.3.2, BOD, ROIN: 1-41136][Section 8.1.3, ORD, ROIN: 1-39963][Section 5.2, ORD, ROIN: 1-39932]

Basis Discussion: In-cave equipment disassembly, removal to maintenance area, and/or replacement is accomplished by local remote handling equipment or by remote handling equipment in dedicated maintenance areas or caves. In general, process systems and equipment within cells or caves that could fail during operations are designed for safe recovery, replacement, or redundancy. Remote handling features help to facilitate interfacing with equipment or components when using remote handling equipment such as in-cave cranes, power manipulators, or master-slave manipulators. [ALARA]

Verification: Verification is expected to be achieved through the following:

Verif. Method	Verif. By	Plan	Notes/Comments
I	ENG	Review of design to ensure that the transfer cart system is remotely removable and replaceable.	Document in an evaluation/assessment

D	SU/COM	Demonstrate remotability in accordance 24590-WTP-PL-RACT-RT-0001, *WTP Remotability Verification Plan.*	Physical demonstration

3.12.2 Nuclear Safety, ALARA, Environmental and Other Regulatory Requirements

None.

3.12.3 System Interface Requirements

None.

3.12.4 Other Technical, Specialty, Operations and Maintenance Requirements

None.

3.13 Monitoring & Controls Requirements

3.13.1 Mission and Functional / Performance Requirements (Including States/Modes)

3.13.1.1 Closed Circuit Television Systems

3.13.1.1.1 CCTV Cameras Installed on Cranes

Requirement: CCTV cameras installed on cranes shall be operated from a remote control station and shall be used to operate the crane. Cranes shall be operated via direct observation through windows where CCTV cameras do not enable proper safe operation of cranes and hoists. [Section 14.16, ORD, ROIN: 8-468][Section 14.16, ORD, ROIN: 8-14269](U.1)

Basis discussion: None.

Verification: Verification is expected to be achieved through:

Verif. Method	Verif. By	Plan	Notes/Comments
I	ENG/OPS	Review the design to confirm that adequate CCTV cameras are provided to monitor and control the crane.	Document in an evaluation/assessment Recommend using a software program such as "Igrip" (or similar)

3.13.1.1.2 CCTVs to Perform Regulatory Inspections

Requirement: The capability to perform regulatory inspections of cell/cave floors, piping, and tanks shall be designed and included in the layout. Non-accessible cells and caves shall be provided with CCTV inspection ports at strategic points (generally above sumps and near vulnerable items of equipment). [Section 12.4, ORD, ROIN: 8-14268](U.1)

Basis discussion: None. [ALARA]

Verification: Verification is expected to be achieved through:

Verif. Method	Verif. By	Plan	Notes/Comments
I	ENG	Review the design to confirm compliance of ability to perform regulatory inspections.	Document in an evaluation/assessment

3.13.1.2 Controls

3.13.1.2.1 Manual Control

Requirement: The HSH system design shall provide for the remote manual control of equipment and functions. Local mode will allow control to be taken away from the control systems. The selection of local control will be logged by the control systems. Local operations will be performed at the equipment site and will not be subject to control system interlocks except for equipment protection interlocks that remain in force to prevent mis-operation. [Section 7.3.5.2, BOD, ROIN: 1-40655][Section 7.3.5.3, BOD, ROIN: 1-40658]Section 7.3.6, BOD, ROIN: 1-40662][Section 7.2.1.6, BOD, ROIN: 1-40634D, ROIN: 1-40634E][Section 11.5, ORD, ROIN: 8-9098](W.1.6)

Basis discussion: None.

Verification: Verification is expected to be achieved through:

Verif. Method	Verif. By	Plan	Notes/Comments
I	ENG	Review the design to ensure proper controls and logic is applied to the manual mode control function.	Document in an evaluation/assessment

3.13.1.2.2 Cave Face Control

Requirement: The initiation, control and monitoring of mechanical handling operations shall be available from operator control stations at the cave face. [Section 11.5, ORD, ROIN: 8-9097; ROIN: 1-39993][Section 7.2.1.5, BOD, ROIN: 8-9078, ROIN: 8-9080, ROIN: 8-9081, ROIN: 8-9082, ROIN: 1-40631][Section 12.4, ORD, ROIN: 8-14267] (W.1.6)

Basis discussion: None.

Verification: Verification is expected to be achieved through:

Verif. Method	Verif. By	Plan	Notes/Comments
D	SU/COM	Demonstrate the ability to view and control the operations through shield windows and cameras at the local operator interfaces.	Physical demonstration

3.13.1.3 Decontamination Tanks

3.13.1.3.1 Decontamination Tank Overflow Protection

Requirement: The appropriate controls shall be specified to prevent spills and overflows from the decontamination tanks. [Section 14.10.1.1, BOD, ROIN: 1-41487, ROIN: 8-5628, ROIN: 1-41488] [Section 7.1, ORD, ROIN: 1-39954] (R.1)

Basis discussion: Level protection provides the capability to determine volume balances during transfers. [ALARA]

Verification: Verification is expected to be achieved through:

Verif. Method	Verif. By	Plan	Notes/Comments
I	ENG	Review the design to confirm that proper controls are specified to prevent inadvertent decontamination fluid spills or overflows.	Document in an evaluation/assessment

3.13.1.3.2 Decontamination Tank Temperature

Requirement: The Decontamination tank shall include temperature-sensing capability to monitor the temperature and control the amount of high pressure steam injected. (R.1)

Basis discussion: Temperature monitoring provides the control of the decontamination tank to preclude the decontamination media boiling.

Verification: Verification is expected to be achieved through:

Verif. Method	Verif. By	Plan	Notes/Comments
I	ENG	Review the design to confirm that temperature monitoring and controls are specified to prevent inadvertent decontamination tank boiling.	Document in an evaluation/assessment
D	SU/COM	Demonstrate that the HPS system can heat the decontamination tank and the temperature controller restrict the temperature to refrain from boiling the decontamination media.	Physical demonstration

3.13.1.4 Non-Safety Interlocks

3.13.1.4.1 Horizontal Shield Door Interlocks

Requirement: Non-safety interlocks shall be provided to prevent the opening or closing of the crane maintenance area and crane decontamination area horizontal shield doors unless the corresponding vertical shield door is in the closed position. [Section 7.3.4, BOD, ROIN: 1-40647] (W.1.5)

Basis discussion: To ensure correct operation of the crane maintenance area and crane decontamination area shield doors, and to prevent damage to the facility or the shield doors themselves, interlocks prevent operation of the corresponding horizontal door until the vertical door is closed. The vertical door has a guide rail located at the bottom of the door to provide restraint and guidance of the horizontal door. If the horizontal door is not guided, it may become misaligned and damage itself or other facility features in its path. Interlock functionality may be accomplished by hardware, software, or a combination of both.

Verification: Verification is expected to be achieved through:

Verif. Method	Verif. By	Plan	Notes/Comments
I	ENG	Review of design to verify interlocks are provided to prevent the opening or closing of the crane maintenance area and crane decontamination area horizontal shield doors unless the corresponding vertical shield door in in the closed position.	Document in an evaluation/assessment
D	SU/COM	Demonstrate the operability of the horizontal shield door interlocks.	Physical demonstration

3.13.1.4.2 Vertical Shield Door Interlocks

Requirement: Non-safety interlocks shall be provided to prevent the opening or closing of the crane maintenance area and crane decontamination area vertical shield doors unless the corresponding horizontal shield door is in the open position. [Section 7.3.4, BOD, ROIN: 1-40647] (W.1.5)

Basis discussion: To ensure correct operation of the crane maintenance area and crane decontamination area shield doors, and to prevent damage to the facility or the shield doors themselves, interlocks prevent operation of the vertical door until the horizontal door is open. The vertical door has a guide rail located at the bottom of the door to provide restraint and guidance of the horizontal door. Interlock functionality may be accomplished by hardware, software, or a combination of both.

Verification: Verification is expected to be achieved through:

Verif. Method	Verif. By	Plan	Notes/Comments
I	ENG	Review of design to verify interlocks are provided to prevent the opening or closing of the crane maintenance area and crane decontamination area vertical shield doors unless the corresponding horizontal shield door in in the open position.	Document in an evaluation/assessment
D	SU/COM	Demonstrate the operability of the vertical shield door interlocks.	Physical demonstration

3.13.1.4.3 Crane Interlocks

Requirement: Non-safety interlocks shall be provided to prevent the main melter crane and the power manipulator crane from moving from the melter cave area to the crane decontamination are or from the crane decontamination area to the crame maintenance area until the crane in centered in form of the open shield doors and the hoist is raised. [Section 7.3.4, BOD, ROIN: 1-40647] (W.1.5)

Basis discussion: Interlocks prevent damange to the crane or shield doors when the cranes are moved from the varioius areas. Interlock functionality may be accomplished by hardware, software, or a combination of both.

Verification: Verification is expected to be achieved through:

Verif. Method	Verif. By	Plan	Notes/Comments
I	ENG	Review of design to verify interlocks are provided to prevent the movement of the main melter crane and power manipulator crane through a shield door until the crane is centered and the hoist is in the raised position.	Document in an evaluation/assessment
D	SU/COM	Demonstrate the operability of the main melter crane and power manipulator crane interlocks.	Physical demonstration

3.13.2 Nuclear Safety, ALARA, Environmental and Other Regulatory Requirements

3.13.2.1 Safety Classification of the Interlocks

Requirement: The interlock safety classification is identified in Table 3-8 and Appendix C. [24590-HLW-M0Q-HSH-00001][Section 4.3.1.2, PDSA, ROIN: 1-21509][Section 4.4.22.2, PDSA, ROIN: 45-32025, ROIN: 45-32026, ROIN: 45-32027, ROIN: 45-32028][Section 5.3.2.2, PDSA, ROIN: 1-21721][Section 11.10, ORD, ROIN: 8-6073] (W.2.1)

Table 3-8 – Safety Classification of the Interlocks

Posting Port Description	Hazard	Facility Worker Consequence	Minimum Class of Barrier	Barrier(s)
Melter Cave 1	Direct Shine through Posting Port	High	SS	Door-to-Door Interlock
	Source in Posting Port	High	SS	Gamma monitor interlock with the out-cave shield door
Melter Cave 2	Direct Shine through Posting Port	High	SS	Door-to-Door Interlock
	Source in Posting Port	High	SS	Gamma monitor interlock with the out-cave shield door

Basis discussion: None.

Verification: Verification is expected to be achieved through:

Verif. Method	Verif. By	Plan	Notes/Comments
I	ENG	Review the design to verify that the interlocks are identified with the appropriate safety classification.	May be accomplished by EQP and/or DVR

3.13.2.2 Interlock for Gamma Detector/Monitor Relative to Posting Ports

Requirement: The design shall provide interlocks for gamma detector/monitor relative to posting ports (see Appendix C) to prevent inadvertent retrieval of contaminated objects that exceed radiation limits. [Section 4.4.22, PDSA, ROIN: 2-46203][Section 4.4.22.2, PDSA, ROIN: 45-32026][Section 4.4.22.2, PDSA, ROIN: 45-32028][Section 9.4.14.4, BOD, ROIN: 1-40962] (W.2.1)

Basis discussion: The gamma detector/monitor interlocks provide reliable control to prevent inadvertent retrieval of contaminated objects from to areas with high or very high radiation sources. The gamma monitor prevents the out-cave door from opening on detection of a high radiation source in the posting port. [ALARA]

Verification: Verification is expected to be achieved through:

Verif. Method	Verif. By	Plan	Notes/Comments
I	ENG	Review the design to verify that the high gamma interlocks are included in the design for the posting ports.	Document in an evaluation/assessment
T	SU/COM	Perform a test to verify that the gamma monitor indicates a source level within the established limits.	Document in an evaluation/assessment
D	SU/COM	Demonstrate the operability of the gamma monitor interlocks.	Physical demonstration
D	SU/COM	Demonstrate that the gamma monitors fail to the alarm state.	Physical demonstration

3.13.2.3 Implementation of Active Safety Instrumented Functions

Requirement: The active safety instrumented functions for the HSH system shall be designed in accordance with the safety criterion 4.3-1, 4.3-3, 4.3-4, 4.3-6, 4.4-1 and 4.4-2 of 24590-WTP-SRD-ESH-01-001-02, Safety Requirements Document Volume II. [Safety Criterion, 4.3-1, 4.3-3, 4.3-4, 4.3-6, 4.4-1 and 4.4-2, SRD, ROIN: 1-38671, ROIN: 1-38672, ROIN: 1-38676, ROIN: 1-38677, ROIN: 1-38679, ROIN: 1-38680, ROIN: 1-38684, ROIN: 1-38685, ROIN: 1-38690, ROIN: 1-38691, ROIN: 1-38693, ROIN: 1-38694, ROIN: 8-498, ROIN: 8-3520, ROIN: 8-3521, ROIN 8-6580] (W.2.1)

Basis discussion: The SRD establishes the criterion and applicable standards for the safety design. The design processes including 24590-WTP-GPG-J-015, *Safety Instrumented System Implementation* and electrical design criteria are used to ensure independence and that the design complies with the mandated standards. The completed designs are documented in Safety Systems Requirements Specifications and other design documents, which are required to be verified to ensure compliance with the standards. [ALARA]

Verification: Verification is expected to be achieved through:

Verif. Method	Verif. By	Plan	Notes/Comments
I	ENG	Verify the Safety Systems Requirements Specifications and designs are in accordance with the criterion and standards in safety criterion 4.3-1, 4.3-3, 4.3-4, 4.3-6, 4.4-1 and 4.4-2 of 24590-WTP-SRD-ESH-01-001-02, Safety Requirements Document Volume II.	Document in an evaluation/assessment

3.13.3 System Interface Requirements

3.13.3.1 Active Safety Instrumentation, Programmable Protection

Requirement: The HSH instruments with active safety functions are required to interface with the PPJ system or be engineered as local safety instrumented functions. Signal interfaces shall use standard 4-20 mA or digital contacts. Appendix C provides a list of the HSH active safety instrumented functions and implementing components for the HSH system.[Section 7.1, BOD, ROIN: 1-40609] (W.2, W.2.1)

Basis Discussion: Active safety instrumentation is implemented independently to the normal control system (PCJ/ MHJ) through the PPJ system or in local logic solvers. The PPJ is the main safety system logic solver used on WTP and includes logic programming to implement the active safety controls.

Verification: Verification is expected to be achieved through:

Verif. Method	Verif. By	Plan	Notes/Comments
I	ENG	Verify required specifications are included in material requisitions (MRs) used to procure active safety instruments.	DVR may include this review

3.13.3.2 NOT USED

3.13.3.3 Mechanical Handling Control System

Requirement: The following HSH mechanical handling equipment shall be controlled and monitored through the MHJ for facility control room control and cave face control. [Sections 9.4.1, 9.6.2, BOD, ROIN: 1-40908, ROIN: 1-41007, ROIN: 8-15066, ROIN: 8-15067](W.1, W.1.2, W.1.3, W.1.4).

- **Main crane (HSH-CRN-00001, HSH-CRN-00014)**
  - The design shall have the capability of operating the main melter crane.

- **Power manipulator crane (HSH-MANIP-00010, HSH-MANIP-00023)**
  - The design shall have the capability of operating the manipulator crane.

- **Decontamination tank lid (HSH-MHAN-00032, HSH-MHAN-00060)**
  - The design shall have the capability of opening and closing the decontamination tank lid.

- **Crane decontamination area shield doors (HSH-DOOR-00001, HSH-DOOR-00002, HSH-DOOR-00005, HSH-DOOR-00006)**
  - The design shall have the capability of operating the shield doors.

- **Crane maintenance area shield doors (HSH-DOOR-00003, HSH-DOOR-00004, HSH-DOOR-00007, HSH-DOOR-00008)**
  - The design shall have the capability of operating the shield doors.

- **Cable reeling system main crane (HSH-RCVY-00014, HSH-RCVY-00019)**
  - The design shall have the capability of operating the main melter crane cable reeling system.

- **Cable reeling system power manipulator crane (HSH-RCVY-00008, HSH-RCVY-00018)**
  - The design shall have the capability of operating the manipulator crane cable reeling system.

Basis Discussion: None.

Verification: Verification is expected to be achieved through:

Verif. Method	Verif. By	Plan	Notes/Comments
I	ENG	Review the design to verify that the identified HSH mechanical handling equipment can be remotely monitored and/or controlled by the MHJ.	Document in an evaluation/assessment
D	SU/COM	Demonstrate remote control operations for all the listed HSH equipment/components.	

3.13.3.4 Local Control

Requirement: Equipment operated under MHJ control shall have a local/maintenance mode that allows direct actuation of the equipment at the local control panel, disregards MHJ commands and interlocks, maintains independent protection interlocks, and provides a local/remote status signal to the MHJ, also will always provide E-stop status regardless of control mode. [Section 11.10, ORD, ROIN: 8-6071, ROIN: 8-6072, ROIN: 8-6073] (W.1, W.1.2, W.1.3, W.1.4)

- Main crane (HSH-CRN-00001, HSH-CRN-00014)
- Power manipulator crane (HSH-MANIP-00010, HSH-MANIP-00023)
- Decontamination tank lid (HSH-MHAN-00032, HSH-MHAN-00060)
- Crane decontamination area shield doors (HSH-DOOR-00001, HSH-DOOR-00002, HSH-DOOR-00005, HSH-DOOR-00006)
- Crane maintenance area shield doors (HSH-DOOR-00003, HSH-DOOR-00004, HSH-DOOR-00007, HSH-DOOR-00008)
- Cable reeling system main crane (HSH-RCVY-00014, HSH-RCVY-00019)

- Cable reeling system power manipulator crane (HSH-RCVY-00008, HSH-RCVY-00018)

Basis Discussion: Local/maintenance mode allows equipment to be operated for maintenance/diagnostic purposes. Disregarding MHJ commands protects personnel and equipment from remotely-initiated operation, also the E-stop function is provided to protect personnel and provide status to the MHJ and local control panel regardless of control mode. Independent protection interlocks, which prevent equipment damage from incorrect operation, include but are not limited to: end stop interlocks which prevent over travel, over speed interlocks, over or under voltage relays, over temperature switches, and variable or adjustable speed drive fault relays.

Verification: Verification is expected to be achieved through:

Verif. Method	Verif. By	Plan	Notes/Comments
I	ENG	Review equipment local control panel* design to verify required local/maintenance mode features and functions are provided.	Document in an evaluation/assessment
D	SU/COM	Demonstrate the operability of local/maintenance mode features and functions during operation from the local control panels.	Physical demonstration

*For type A equipment packages, a motor control center will function as the local control panel.

3.13.4 Other Technical, Specialty, Operations and Maintenance Requirements

3.13.4.1 Loss of Electrical Power

Requirement: On loss of offsite electrical power, normal export procedures shall be discontinued and all crane operations shall cease in a failsafe manner. [Section 11.4.1, BOD, ROIN: 1-41152] (Y.1.1)

Basis discussion: None.

Verification: Verification is expected to be achieved through:

Verif. Method	Verif. By	Plan	Notes/Comments
I	ENG	Review the design to confirm that on loss of site power that crane operations cease in a safe manner.	Document in an evaluation/assessment

3.14 Other SSC Requirements

3.14.1 Mission and Functional / Performance Requirements (Including States/Modes)

3.14.1.1 Recovery of HLW Canister from HPH System

Requirement: The HSH system shall have provisions for the recovery of waste canisters from the HPH system when required (Reference 24590-HLW-3ZD-HRH-0001, *HLW Canister Receipt Handling (HRH) System Design Description* for the canister grapple design requirements and verification). (T3)

Basis discussion: In the event that the HSH system needs to retrieve a waste canister from the HPH system, the grapple is retrieved from a storage location outside the HSH area. [ALARA]

Verification: Verification is expected to be achieved through:

Verif. Method	Verif. By	Plan	Notes/Comments
I	ENG	Review the design to confirm that adequate provision are provided for the recovery of a canister from the HPH system.	Document in an evaluation/assessment
D	SU/COM	Demonstrate recovery of canister from HPH system pour tunnel bogie.	Physical demonstration

3.14.1.2 Remote Equipment Dimensional Records

Requirement: [HOLD] Systems and equipment requiring remote installation and maintenance shall have tolerances specified in their design and be as-built with sufficient precision to provide for the ability to remotely install, connect, disconnect, and reconnect all replaceable components. [ORD, Section 14.10] (ROIN 1-40075)

Basis discussion: Precision tolerances and as-built configuration management supports remote operations and maintenance [ALARA]. This includes wall nozzles, wall box nozzles, vessel nozzles, melter nozzles, jumper dimensions, equipment interfaces and supports, and equipment plinth or anchor locations. This requirement is on "HOLD" pending issuance of the ORD clarification (ATS, 24590-WTP-ATS-MGT-15-0096).

Verification: Verification is expected to be achieved through:

Verif. Method	Verif. By	Plan	Notes/Comments
I	ENG	Verify that tolerances and dimensions are defined in design documents with sufficient precision to support remote installation, connection, disconnection and reconnection, as applicable.	Required tolerances are specified in specifications, drawings, datasheets, etc.
I	ENG	Review supplier fabrication and installation drawings to verify compliance with dimensions and tolerances specified in the purchase order.	Accomplished during review of submitted G-321-E documents

Verif. Method	Verif. By	Plan	Notes/Comments
I	SQR	Review supplier fabrication/inspection records to verify as-built equipment complies with dimensions and tolerances specified in supplier fabrication drawings.	As instructed by hold/witness points in the MAP
I	CON	Take as-built measurements of installed equipment and verify compliance with dimensions and tolerances specified in supplier installation drawings and manuals.	Recorded in equipment inspection record
D	SU/COM	Demonstrate remotability of installed equipment in accordance with 24590-WTP-PL-RACT-RT-0001, *WTP Remotability Verification Plan*.	Physical demonstration

3.14.2 Nuclear Safety, ALARA, Environmental and Other Regulatory Requirements

None.

3.14.3 System Interface Requirements

None.

3.14.4 Other Technical, Specialty, Operations and Maintenance Requirements

None.

3.15 Relevant Codes and Standards

3.15.1 Codes of Record

Table 3-10 identifies relevant external codes and standards applicable to the HSH design. These are selected from those documents that comprise the Code of Record (COR) as established in 24590-WTP-RPT-ENG-01-001, *Technical Baseline Description*, i.e., the WTP Contract, the Basis of Design (BOD), and the Safety Requirements Document Volume II (SRD). Use of these documents is typically invoked in the design process through the documents identified in Section 3.15.2. Beyond inclusion here, no attempt is made in this document to extract individual design requirements from these documents for allocation to SSCs.

In some cases the expected means of verification may be established on the basis of tests or other criteria required by the codes and standards. This does not necessarily include verification or testing more appropriately defined in the procurement of individual sub-systems or components, or verification or testing that is a routine activity defined by specifications and/or procedures used by construction and startup.

Table 3-9 – HSH Applicable Codes & Standards

Implementing Codes and Standards: [Contract No. DE-AC27-01RV14136, WTP Contract]
• Not applicable
Implementing Codes and Standards: [24590-WTP-DB-ENG-01-001, Rev 2, Basis Of Design]
• API STD-620, *Design and Construction of Large, Welded, Low-Pressure Storage Tanks.*

• ASME B30.2, *Overhead and Gantry Cranes (Top Running Bridge, Single or Multiple Girder, Top Running Trolley Hoist)*
• ASME B30.11, *Monorails and Underhung Cranes*
• ASME 30.16, *Overhead Hoists (Underhung)*
• ASME NOG 1-2002, *Rules for Construction of Overhead and Gantry Cranes*
• AWS D1.1/D1.1M, *Structural Welding Code – Steel.*
• AWS D1.6, *Structural Welding Code – Stainless Steel.*
• CMAA 70-2000, *Specifications for Top Running Bridge and Gantry Type Multiple Girder Electric Overhead Traveling Cranes*
• IEEE 1202-1991, *Standard for FlameTesting of Cables for Use in Cable Tray in Industrial and Commercial Occupancies*
• NFPA 101, *Life Safety Code, 1997 and 2000 Editions*
• WAC 173-303, *Washington Administrative Code – Dangerous Waste Regulations.*
Implementing Codes and Standards: [24590-WTP-SRD-ESH-01-001-02, Rev 7, Section 4, *SRD*]
• ANSI/ANS 58.8-1994, *Time Response Design Criteria for Safety-Related Operator Actions.*
• ANSI/ANS 58.9-1981, *Single Failure Criteria for LWR (Light Water Reactor) Safety-Related Fluid Systems.*
• ANSI/ISA 67.04.01-2006, *Setpoints for Nuclear Safety-Related Instrumentation*, as tailored in Appendix C of the SRD.
• ANSI/AISC N690-1994, *Specification for Safety-Related Structures for Nuclear Facilities*, as tailored in Appendix C of the SRD
• CMAA 70-2000, *Specifications for Top Running Bridge and Gantry Type Multiple Girder Electric Overhead Traveling Cranes* (supplemented with ASME NOG 1-2002, Sections NOG-1140, NOG-4150, NOG-5482, NOG-6120b and NOG-6150 for SS cranes). Note: Seismic acceleration loads shall be included in the extraordinary loadings identified in CMAA 70-2000.
• CMAA 74-2000, *Specifications for Top Running and Under Running Single Girder Electric Overhead Traveling Cranes Utilizing Under Running Trolley Hoist* (supplemented with ASME NUM 1-2000 [with NUM 1a-2002], Section NUM-G2000, NUM-II-7000, NUM-II-8200, NUM-II-8300, and NUM-II-8400 for SS cranes). Note: Seismic acceleration loads shall be included in the extraordinary loading identified in CMAA 74-2000.
• DOE-STD-1020-94 (Change 1 1996), *Natural Phenomena Hazards Design and Evaluation Criteria for Department of Energy Facilities*
• DOE-STD-1066-97, *Fire Protection Design Criteria,* as tailored in Appendix C of the SRD
• IEEE 323-1983, *Qualifying Class 1E Equipment for Nuclear Power Generating Stations*, as tailored in Appendix C of the SRD.
• IEEE 338-1987, *Criteria for Periodic Surveillance Testing of Nuclear Power Generating Station Safety Systems*, as tailored in Appendix C of the SRD.
• IEEE 344-1987 (R1993), *Recommended Practice for Seismic Qualification of Class 1E Equipment for Nuclear Power Generating Stations*, as tailored in Appendix C of the SRD.
• IEEE 379-1994, *Standard Application of the Single Failure Criterion to Nuclear Power Generating Stations*, as tailored in Appendix C of the SRD.
• IEEE 384-1992, *Standard Criteria for Independence of Class 1E Equipment and Circuits*, as tailored in Appendix C of the SRD.
• IEEE 497-2002, *Criteria for Accident Monitoring Instrumentation for Nuclear Power Generating Stations* as tailored in Appendix C of the SRD.
• IEEE 1023-88, *Guide for the Application of Human Factors Engineering to Systems, Equipment, and Facilities of Nuclear Power Generating Stations.*
• ANSI/ISA-S84.01-96, *Application of Safety Instrumented Systems for the Process Industries.*
• NFPA 70-1999, *National Electrical Code*

• NFPA 69-2002, *Standard on Explosion Prevention Systems*, as tailored in Appendix C of the SRD.
• NFPA 801-2003, *Standard for Fire Protection for Facilities Handling Radioactive Materials*, as tailored in Appendix C of the SRD.
Implementing Codes and Standards: [24590-WTP-PSAR-ESH-01-002-04, Rev 5a, HLW Preliminary Documented Safety Analysis (PDSA)]
• ANSI N42.18-1980 (R1991), *Specification and Performance of On-Site Instrumentation for Continuously Monitoring Radioactivity in Effluents.*
• ASTM A 312, *Standard Specification for Seamless, Welded, and Heavily Cold Worked Austenitic Stainless Steel Pipes.*
• ASTM A 240, *Standard Specification for Chromium and Chromium-Nickel Stainless Steel Plate, Sheet, and Strip for Pressure Vessels and for General Applications.*

3.15.2 WTP Standards, Design Criteria and (General) Specifications

Table 3-12 identifies relevant discipline design criteria, guides, and general specifications applicable to the HSH system. Use of these documents to develop the detailed design of SSCs is governed by engineering procedures. The majority of requirements contained within these documents are derived from external codes and standards or are specified methods and approaches to achieve standardization and consistency of design. Beyond inclusion here, no attempt is made in this document to extract individual design requirements from these documents for tracing and verification, or to define how direction provided by these documents is applicable and allocated (or not) to individual SSCs.

Table 3-10 – WTP Design Criteria, Guides, and General Specifications Applicable to HSH

Document Number	Title
Design Criteria Documents:	
24590-WTP-DC-E-01-001	Electrical Design Criteria
24590-WTP-DC-E-06-001	Design Criteria for Approval of Electrical Equipment
24590-WTP-DC-E-09-001	Design Criteria for Electrical Equipment Installations
24590-WTP-DC-ENG-06-001	Design Criteria for Environmental and Natural Phenomena Hazard Qualification of Structures Systems and Components
24590-WTP-DC-M-06-001	Mechanical Systems Design Criteria
24590-WTP-DC-PS-03-001	Jumper Stress Design Criteria
24590-WTP-DC-ST-04-001	Seismic Analysis and Design Criteria
Design Guides:	
24590-WTP-GPG-E-0004	Consolidated Block Diagram Work Process
24590-WTP-GPG-ENG-033	Evaluation for Seismic Interaction Effects
24590-WTP-GPG-ENG-075	Identification of Electrical Equipment & Materials
24590-WTP-GPG-ENG-086	Equipment Environmental Qualification
24590-WTP-GPG-ENG-0103	Equipment Seismic Qualification
24590-WTP-GPG-ENG-0109	Accessibility Review of Equipment and Components
24590-WTP-GPG-ENG-0124	Selection Process for the Use of WSGM for Design and Qualification of Equipment
24590-WTP-GPG-ENG-0141	WTP Radiation Damage Thresholds for Non-metallic Materials
24590-WTP-GPG-J-005	Control Systems Interfaces
24590-WTP-GPG-J-006	System Block Diagrams
24590-WTP-GPG-J-015	Safety Instrumented System Implementation
24590-WTP-GPG-M-002	Hydraulic Seals
24590-WTP-GPG-M-013	Plant Wash System Design

Document Number	Title
24590-WTP-GPG-M-024	Compressed Air Systems
24590-WTP-GPG-M-036	Determining Quality Level and Seismic Category Classification of Sub-Components, Assemblies, Sub-Assemblies, and Parts
24590-WTP-GPG-P-0003	Jumper Design Guide
24590-WTP-GPG-SRAD-001	Design Guide for ALARA
24590-WTP-GPG-SRAD-0006	Guidance for and Documentation of Technical Bases for Assessment of Dose Rate, Flux, Energy Deposition Rate, and/or Shielding Shield Calculations
Specifications:	
24590-HLW-3PS-M000-T0002	Engineering Specification for Through Wall Power Manipulator
24590-HLW-3PS-MHP0-T0001	Engineering Specification for Central Vacuum (Source Extraction) Cleaning System
24590-HLW-3PS-MX00-T0001	Engineering Specification for QL Shielded Personnel Access Doors
24590-WTP-3PS-ADDC-T0002	Engineering Specification for HLW System Transfer Hatches, Hatch Drives, Hatch Pushrod Assemblies, and Floor Penetration Liners
24590-WTP-3PS-ADDH-T0006	Engineering Specification for QL Crane Maintenance Shield Doors for HLW and PTF for Safety and Seismic designations
24590-WTP-3PS-EKP0-T0001	Engineering Specification for Electrical Requirements for Packaged Equipment
24590-WTP-3PS-FB01-T0001	Engineering Specification for Structural Design Loads for Seismic Category III & IV Equipment and Tanks
24590-WTP-3PS-HCYT-T0002	Engineering Specification for HLW and PTF Solid Waste, Filter and Decontamination Baskets
24590-WTP-3PS-HD00-T0001	Engineering Specification for Maintenance Decontamination Equipment
24590-WTP-3PS-JQ00-T0004	Engineering Specification for Management of Supplier Software
24590-WTP-3PS-JQ07-T0001	Engineering Specification for Instrumentation for Packaged Systems
24590-WTP-3PS-M000-T0002	Engineering Specification for General Specification For Remote and Mechanical Handling Equipment Design and Manufacture
24590-WTP-3PS-M000-T0006	Engineering Specification for WTP Facility Posting Port
24590-WTP-3PS-M000-T0007	Engineering Specification for WTP Facility Posting Port Glovebox
24590-WTP-3PS-M000-T0012	Engineering Specification for Master Slave Manipulators for PTF, HLW, LAW and LAB
24590-WTP-3PS-MJJ0-T0003	Engineering Specification for Lifting Beams
24590-WTP-3PS-MJKG-T0002	Engineering Specification for CMAA 74 Top Running and Under Running Single Girder & CMAA 70 Top Running Bridge & Gantry Type Multiple Girder EOT Cranes
24590-WTP-3PS-MJKG-T0003	Engineering Specification for CMAA 70 High Integrity Cranes
24590-WTP-3PS-MJKG-T0004	Engineering Specification for High Integrity Cranes with Power Manipulator
24590-WTP-3PS-MQL0-T0002	Engineering Specification for Mechanical Handling Custom Designed and Fabricated Equipment
24590-WTP-3PS-MQL0-T0003	Engineering Specification for Special Grapples and Lifting Devices
24590-WTP-3PS-MX00-T0002	Engineering Specification for Shielded Glass Windows
24590-WTP-3PS-MX00-T0003	Engineering Specification for QL Through-wall Devices
24590-WTP-3PS-MZ00-T0001	Engineering Specification for Hydraulic Power Pack for In-Cave Equipment
24590-WTP-3PS-SS90-T0001	Engineering Specification for Seismic Qualification of Seismic Category I/II Equipment and Tanks
24590-WTP-3PS-SS90-T0002	Engineering Specification for WTP Project Tailoring of ANSI/AISC N690 & IEEE 323, 344 & 382

4 System Description

This section summarizes design output information, describing the current design and the operational and maintenance aspects of the system. The information provided below does not contain design requirements and should not be used as design input. The description of the current design contained in this section may not fully align with design requirements. This is acceptable within the context of this document. Areas of misalignment are to be resolved through appropriate mechanisms and the SDD updated to reflect changes made to the design. Changes to the descriptive text will be made following the changes to the lower tiered Engineering documents.

4.1 Configuration Information

The High-Level Waste (HLW) Facility Melter Cave Support Handling (HSH) System enables remote maintenance and recovery of all remotable equipment located within the HLW Melter Caves 1 and 2. The mechanical handling in-cave operations are performed remotely using a combination of cranes and manipulators with appropriate tooling, shield windows, and closed circuit television cameras (CCTVs).

System HSH consists of all systems, structures, and components (SSC) that perform or enable the lifecycle handling of remotable equipment within the melter caves and the associated decontamination and maintenance areas. The system provides remote maintenance and remote physical operations of the melter and melter process systems, including startup frit handling. The system enables equipment and personnel import and export, equipment assembly, interim storage and disassembly, in-situ and in-cave maintenance of equipment, shielding, contamination control and decontamination, equipment size reduction, packaging and export of solid waste and eventual facility decommissioning and deactivation. Remote operations receive a combination of visual feedback through shield windows and closed circuit television (CCTV) cameras, remote sensing device feedback, or actual force feedback from manually operated master slave manipulators (MSMs). Remote operations are conducted from the crane control room or the C2 corridors at a local operator interface (LOI) console, local control panel or shield window station. Remotable equipment is defined herein as equipment purposely designed and built to be remotely handled. As melter caves 1 and 2 are alike, with the exception of some plant service pipe penetrations, both melter caves will be addressed in the singular form throughout this document.

Equipment and personnel import and export is through a combination of crane and shielded personnel access doors (SPADs), floor hatches, posting and waste transfer ports. Crane shield doors allow the melter cave main crane and power manipulator crane to traverse from the melter cave, through the crane decontamination area (CDA), to the crane maintenance area (CMA). SPADs allow personnel access to the CMA from the elevations +14 ft and +58 ft operating corridors and to the CDA from the CMA at elevation +58 ft. Platforms and ladders in the CMA and CDA allow personnel access to the cranes. All but the largest process equipment can be imported into the CMA through a floor hatch above the C2/C3 melter airlock. The melter and vessels are imported through the System HMH melter overpack and associated System HMH shield doors. System HSH provides the necessary transfer cart and import winches to stage then extract equipment from the overpack. Small tools and equipment can be imported into the melter cave through a glovebox and posting port. Solid waste is exported from the melter cave through a waste transfer port.

In-situ maintenance is accomplished using the in-cave tools mounted on the cranes or manipulators. The in-situ maintenance is limited to simple tasks that can be accomplished with a crane hook, overhead

power manipulator or hook and manipulator deployed tools such as: an impact wrench, nut runner or grease gun. In-cave maintenance is accomplished with through-wall hydraulic power and master-slave manipulators at shield window stations. A sorting area, breakdown table and tool table provide work areas adjacent to the shield windows. Tool racks store in-cave tools for ease of accessibility with the cranes and reconfiguration with the manipulators.

4.1.1 Description of System, Subsystems, and Major Components

The figures and accompanying tables provide a reference to the HSH System equipment, relative locations, and interfaces within System HSH.

Figure 4-1 – System HSH Section View Looking East

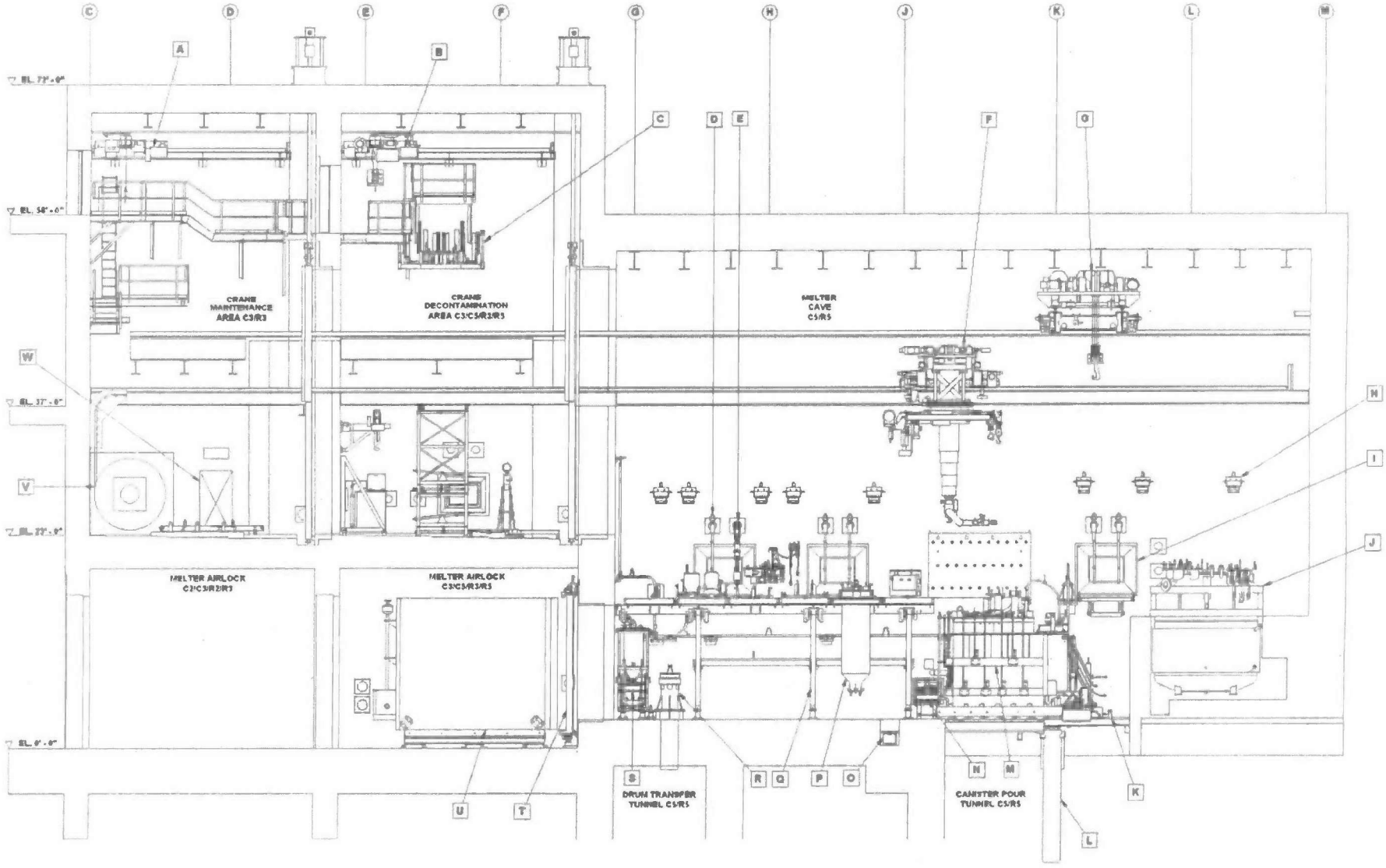

Tag	Melter Cave 1 CTNs (24590-)	Melter Cave 2 CTNs (24590-)	Description (or Interface)
A	HLW-MJ-HSH-CRN-00011	HLW-MJ-HSH-CRN-00013	Maintenance Area Crane (Section 4.1.1.1.5)
B	HLW-MJ-HSH-CRN-00010	HLW-MJ-HSH-CRN-00012	Decontamination Area Crane (Section 4.1.1.1.4)
C	HLW-MH-HSH-MHAN-00033 HLW-MH-HSH-MHAN-00034 HLW-MH-HSH-MHAN-00035 HLW-MH-HSH-MHAN-00097	HLW-MH-HSH-MHAN-00079 HLW-MH-HSH-MHAN-00080 HLW-MH-HSH-MHAN-00081 HLW-MH-HSH-MHAN-00098	ADS Pump Decontamination Template (Section 4.1.1.4.2) Transfer Pump Decontamination Template Agitator Decontamination Template Decontamination Template Storage Rack
D	(East Wall North to South) HLW-MJ-HSH-MANIP-00005 HLW-MJ-HSH-MANIP-00007 HLW-MJ-HSH-MANIP-00006 HLW-MJ-HSH-MANIP-00008 HLW-MJ-HSH-MANIP-00009	(East Wall North to South) HLW-MJ-HSH-MANIP-00018 HLW-MJ-HSH-MANIP-00019 HLW-MJ-HSH-MANIP-00020 HLW-MJ-HSH-MANIP-00021 HLW-MJ-HSH-MANIP-00022	Master Slave Manipulator (Section 4.1.1.3.2)
E	HLW-MJ-HSH-MANIP-00004	HLW-MJ-HSH-MANIP-00017	Sorting Table Hydraulic Power Manipulator (Section 4.1.1.3.1)
F	HLW-MJ-HSH-MANIP-00010	HLW-MJ-HSH-MANIP-00023	Power Manipulator Crane (with 1 Ton Auxiliary Hoist) (Section 4.1.1.1.2)
G	HLW-MJ-HSH-CRN-00001	HLW-MJ-HSH-CRN-00014	25 Ton (Main) Crane (Section 4.1.1.1.1)
H	Various	Various	Wall Mounted Lights and Cameras, Through Wall Lights and Cameras Wall-mounted and through wall lights and cameras provide illumination and operator viewing for remote handling and maintenance operations. System HSH performs lifecycle handling of wall-mounted lights and cameras. Wall mounted lights and cameras are installed and removed with the crane mounted power manipulator. Light bulbs are replaced with MSMs. Through-wall lights and cameras interface with standard 10-1/2 inch liner and the provided through wall extraction equipment.
I	(North to South) WTP-AD-30-SWIN-00001 WTP-AD-30-SWIN-00006 WTP-AD-30-SWIN-00007 WTP-AD-30-SWIN-00008	(North to South) WTP-AD-30-SWIN-00002 WTP-AD-30-SWIN-00057 WTP-AD-30-SWIN-00058 WTP-AD-30-SWIN-00059	Shield Window
J	HLW-MV-HFP-VSL-00002	HLW-MV-HFP-VSL-00006	Melter Feed Vessel (System HFP) System HSH performs lifecycle handling of the vessel, vessel-mounted equipment and associated jumpers. Specific handling equipment is provided for the vessel, agitator, transfer pump and ADS pump. The vessel is handled through the System HMH overpack (future), vessel transfer cart, cart winch, 23 ½ ton lifting beam, 25 ton crane and vessel set down pads.

Tag	Melter Cave 1 CTNs (24590-)	Melter Cave 2 CTNs (24590-)	Description (or Interface)
			The vessel mounted equipment is handled through a combination of the 25 ton crane, power manipulator crane, impact wrenches and adjustable span lifting beams. In-situ maintenance of agitator and pumps consists of bearing re-greasing with remote grease gun. In-situ maintenance of demister consists of demister pad change-out with crane mounted power manipulator. In-cave maintenance consists of equipment replacement only. Decontamination and maintenance is performed through combination of equipment stand, decontamination and maintenance templates, decontamination tank and turntable and remote spray lances.
K	HLW-MH-HSH-MHAN-00028 HLW-MH-HSH-MHAN-00029	HLW-MH-HSH-MHAN-00075 HLW-MH-HSH-MHAN-00076	Canister Pour Tunnel Small and Large Cover Plates
L	Various	Various	HLW Canister System HSH can recover a canister from the Canister Pour Tunnel.
M	HLW-ME-HMP-MLTR-00001	HLW-ME-HMP-MLTR-00002	HLW Melter (System HMP) System HSH performs lifecycle handling of melter, melter consumables and associated jumpers. System HSH equipment is provided for remote handling of; melter, startup glass frit, melter consumables, jackbolts, melter lid and in-cave bus cables. The melter is imported and exported through a combination of the System HMH shield doors and overpack (future) and directly with the System HSH melter import winch and import winch switch assembly. Due to the extensive set of tasks required in the lifecycle handling of the melter, virtually all in cave equipment will be utilized during lifecycle handling. Dedicated storage, handling and size reduction equipment is provided for all melter consumables as in-situ maintenance is limited to component replacement. Replaceable melter consumables are the feed nozzle, frit addition nozzle, startup heaters, bubblers, air lift lances, thermowells, thermocouples, level detector, film cooler and cleaner, pour spout, discharge chamber lid and heaters, melter plenum and pour stream cameras.

Tag	Melter Cave 1 CTNs (24590-)	Melter Cave 2 CTNs (24590-)	Description (or Interface)
			System HSH may be outfitted to remove the melter lid and break out solidified glass and refractory. Provisions to remove the lid and permanent plinths to set and flip the melter lid onto are included in the installed system. Size reduction of melter consumables is with fixed shear and size reduction station.
N	HLW-EB-LVE-BUS-30103	HLW-EB-LVE-BUS-30107	HLW Melter Bus Plug System HSH performs lifecycle handling of the through wall bus plug. Plug is remotely installed and removed from through wall liner with Melter Bus Pug Jack, 25 Ton Crane, Power Manipulator Crane and Nut Runner.
O	HLW-MY-HSH-BSKT-00002 HLW-PY-HSH-BSKT-00007	HLW-PY-HSH-BSKT-00005 HLW-PY-HSH-BSKT-00008	Melter Cave Sump Basket Decontamination Pit Sump Basket
P	HLW-MY-HSH-BSKT-00001 HLW-PY-HSH-BSKT-00003	HLW-PY-HSH-BSKT-00004 HLW-PY-HSH-BSKT-00006	Consumable Storage Bucket (Section 4.1.1.4.6) Glass Frit Addition Assembly (not shown) (Section 4.1.1.4.6)
Q	HLW-MZ-HSH-BENCH-00001 HLW-MZ-HSH-BENCH-00002	HLW-MZ-HSH-BENCH-00006 HLW-MZ-HSH-BENCH-00007	False Floor Panels Structural Frame (Section 4.1.1.4.1) Breakdown Area Enclosure Panels (Section 4.1.1.4.5)
R	HLW-MH-HSH-CHT-00001	HLW-MH-HSH-CHT-00002	Waste Transfer Port (Section 4.1.1.3.7)
S	HLW-MH-HSH-MHAN-00016	HLW-MH-HSH-MHAN-00068	Central Vacuum System (Section 4.1.1.6.1)
T	HLW-AD-HMH-DOOR-00010	HLW-AD-HMH-DOOR-00015	C5 Shield Door The C5 shield door provides shielding for the C3/C5 airlock, an engineered airflow path and an entryway into the melter cave for import / export of all large process equipment.
U	HLW-MH-HMH-MHAN-00012	HLW-MH-HMH-MHAN-00023	Melter Overpack (System HMH, future) and Transport Bogie The shielded overpack provides an import / export cask for all large process equipment including; Melter (System HMP), Feed and Feed Preparation Vessel (System HFP), Submerged Bed Scrubber (SBS) and High Efficiency Mist Eliminator (HEME) (System HOP) The melter interfaces with the System HMH floor rails within the melter cave. All vessels interface with the HSH 25 ton crane, lifting beams, vessel transfer cart and cart winch and vessel set down pads for import and export.
V	HLW-MH-HSH-RCVY-00008	HLW-MH-HSH-RCVY-00018	Power Manipulator Crane Cable Reel (Section 4.1.1.1.2)
W	HLW-AD-HSH-DOOR-00017	HLW-AD-HSH-DOOR-00016	3 inch Shielded Personnel Access Door (SPAD) 23 ft (Section 4.1.1.2.3)

Tag	Melter Cave 1 CTNs (24590-)	Melter Cave 2 CTNs (24590-)	Description (or Interface)
	HLW-AD-HSH-DOOR-00018	HLW-AD-HSH-DOOR-00019	3 inch Shielded Personnel Access Door (SPAD) 58 ft (Section 4.1.1.2.3)

Figure 4-2 – System HSH Section View Looking West

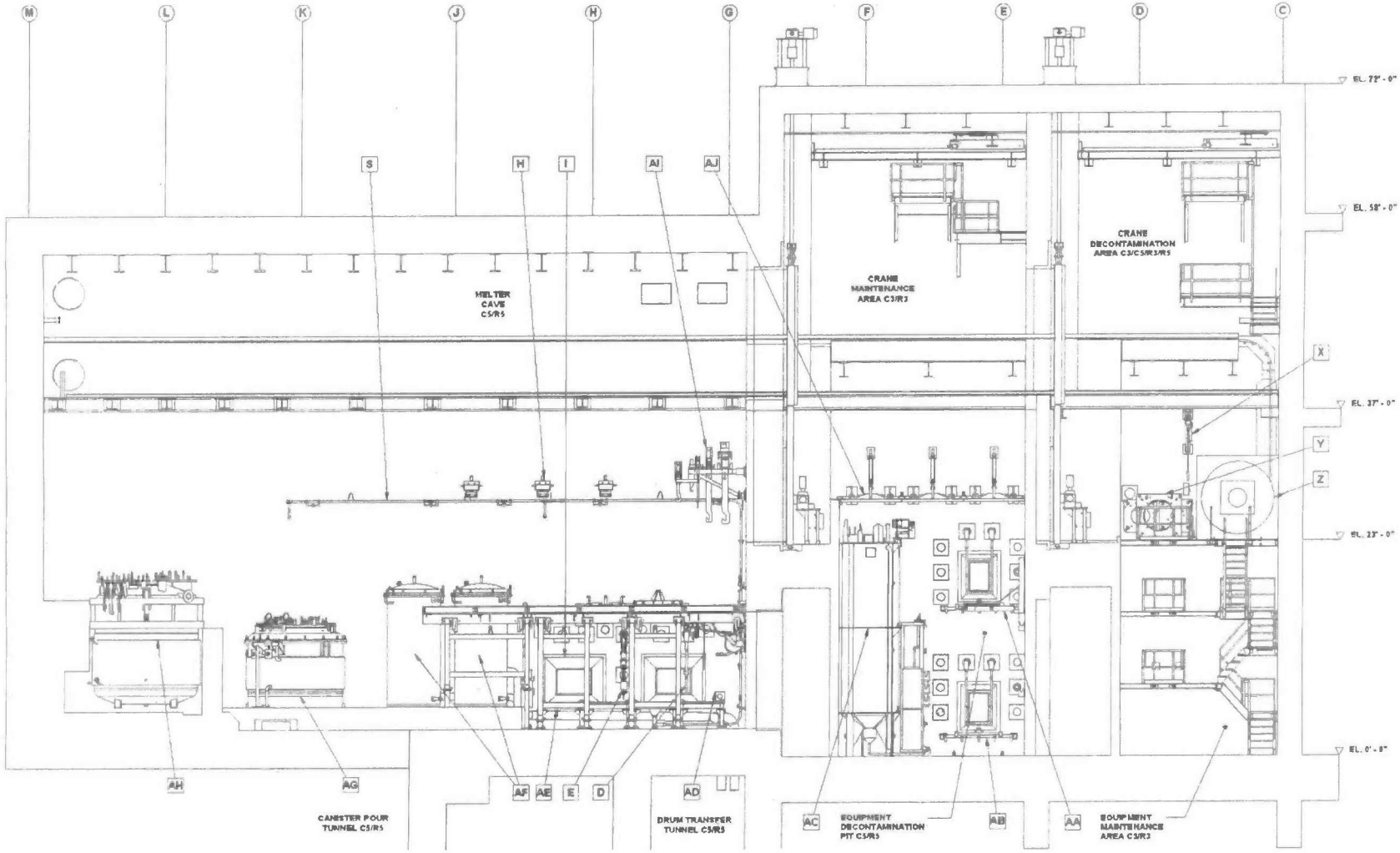

Tag	Melter Cave 1 CTNs (24590-)	Melter Cave 2 CTNs (24590-)	Description (Interface)
D	North to South and Top to Bottom HLW-MJ-HSH-MANIP-00013 HLW-MJ-HSH-MANIP-00012 HLW-MJ-HSH-MANIP-00015 HLW-MJ-HSH-MANIP-00014 HLW-MJ-HSH-MANIP-00011	North to South and Top to Bottom HLW-MJ-HSH-MANIP-00026 HLW-MJ-HSH-MANIP-00025 HLW-MJ-HSH-MANIP-00028 HLW-MJ-HSH-MANIP-00027 HLW-MJ-HSH-MANIP-00024	Master Slave Manipulator (Section 4.1.1.3.2)
E	HLW-MJ-HSH-MANIP-00002	HLW-MJ-HSH-MANIP-00016	Breakdown Table Hydraulic Power Manipulator (Section 4.1.1.3.1)
H	Varies	Varies	Wall Mounted Lights and Cameras, Through Wall Lights and Cameras
I	North to South, Top to Bottom WTP-AD-30-SWIN-00037 WTP-AD-30-SWIN-00038 WTP-AD-30-SWIN-00012 WTP-AD-30-SWIN-00011	North to South, Top to Bottom WTP-AD-30-SWIN-00064 WTP-AD-30-SWIN-00065 WTP-AD-30-SWIN-00063 WTP-AD-30-SWIN-00062	Shield Window
S	HLW-MH-HSH-MHAN-00016	HLW-MH-HSH-MHAN-00068	Central Vacuum System (Section 4.1.1.6.1)
X	HLW-MJ-HSH-CRN-00015	HLW-MJ-HSH-CRN-00016	Maintenance Pit Jib Crane
Y	HLW-MH-HSH-MHAN-00036 HLW-MH-HSH-MHAN-00037 HLW-MH-HSH-MHAN-00038 HLW-MH-HSH-MHAN-00095	HLW-MH-HSH-MHAN-00082 HLW-MH-HSH-MHAN-00083 HLW-MH-HSH-MHAN-00084 HLW-MH-HSH-MHAN-00096	ADS Feed Pump Maintenance Template (Section 4.1.1.4.6) Feed Transfer Pump Maintenance Template Agitator Maintenance Template Maintenance Template Storage Rack
Z	HLW-MH-HSH-RCVY-00014	HLW-MH-HSH-RCVY-00019	25 Ton (Main) Crane Cable Reel (Section 4.1.1.1.1)
AA	HLW-MH-HSH-MHAN-00018	HLW-MH-HSH-MHAN-00059	Equipment Decontamination Area Turntable (Section 4.1.1.6.7)
AB	Top to Bottom HLW-MZ-HSH-BENCH-00011 HLW-MZ-HSH-BENCH-00012	Top to Bottom HLW-MZ-HSH-BENCH-00013 HLW-MZ-HSH-BENCH-00014	Equipment Decontamination Pit Shelf (Section 4.1.1.6.8)
AC	HLW-MT-HSH-TK-00001 HLW-MT-HSH-TK-00003	HLW-MT-HSH-TK-00002 HLW-MT-HSH-TK-00004	Decontamination Tank (Section 4.1.1.6.6) Pump Support Package
AD	HLW-MH-HSH-MHAN-00031 HLW-MH-HSH-RCVY-00012	HLW-MH-HSH-MHAN-00078 HLW-MH-HSH-RCVY-00020	Plasma Torch (Section 4.1.1.7.6) Pass Through Port (Section 4.1.1.3.6)
AE	HLW-MZ-HSH-BENCH-00003	HLW-MZ-HSH-BENCH-00008	Breakdown Table
AF	North to South HLW-MV-HOP-HEME-00001A HLW-MV-HOP-HEME-00001B	North to South HLW-MV-HOP-HEME-00002A HLW-MV-HOP-HEME-00002B	High Efficiency Mist Eliminator (System HOP) System HSH performs lifecycle handling of vessel, vessel equipment and associated jumpers. Specific interface equipment is provided for:

Tag	Melter Cave 1 CTNs (24590-)	Melter Cave 2 CTNs (24590-)	Description (Interface)
			- vessel - level and temperature detection equipment - HEME filters and filter stand - O-ring gaskets The high efficiency mist eliminator (HEME) vessels are handled through a combination of overpack (future), vessel transfer cart and cart winch, 10 ton lifting beam, 25 ton crane and vessel set down pads. The vessel mounted equipment is handled through combination of the 25 ton crane, power manipulator crane, impact wrench and adjustable span lifting beams. In-situ maintenance of HEME filters consists of equipment replacement only. Once HEME filters are changed out, the filter assembly (candle) is staged on the HEME vessel set down pad and the band clamps holding the individual filter elements together are cut. Each filter is then loaded into a solid waste basket and exported to System RWH.
AG	HLW-MK-HOP-SCB-00001	HLW-MK-HOP-SCB-00002	Submerged Bed Scrubber (System HOP) System HSH performs lifecycle handling of vessel, vessel equipment and associated jumpers. Specific interface equipment is: - vessel - level and temperature detection equipment - packed bed - O-ring gaskets The submerged bed scrubber is handled through a combination of overpack (future), vessel transfer cart and cart winch, 10 ton and 23 ½ ton lifting beams, 25 ton crane and vessel set down pads. Vessel mounted equipment is handled through combination of 25 ton crane, power manipulator crane, impact wrench and adjustable span lifting beams. In-situ maintenance of SBS consists of equipment replacement only. The packed bed will require change out.
AH	HLW-MV-HFP-VSL-00001	HLW-MV-HFP-VSL-00005	Feed Preparation Vessel (System HFP) Vessel Mounted Equipment (System HFP)

Tag	Melter Cave 1 CTNs (24590-)	Melter Cave 2 CTNs (24590-)	Description (Interface)
AI	HLW-MJ-HSH-LIFT-00006	HLW-MJ-HSH-LIFT-00012	Melter Cave Lifting Beam Storage Rack (all Section 4.1.1.1.7)
	HLW-MJ-HSH-LIFT-00004	HLW-MJ-HSH-LIFT-00010	½ Ton Adjustable Span Lifting Beam
	HLW-MJ-HSH-LIFT-00001	HLW-MJ-HSH-LIFT-00007	3 Ton Adjustable Span Lifting Beam
	HLW-MJ-HSH-LIFT-00002	HLW-MJ-HSH-LIFT-00008	10 Ton Adjustable Span Lifting Beam
	HLW-MJ-HSH-LIFT-00015	HLW-MJ-HSH-LIFT-00016	½ Ton Hook Adapter
	HLW-MJ-HSH-LIFT-00017	HLW-MJ-HSH-LIFT-00018	3 Ton Hook Adapter
	HLW-MJ-HSH-LIFT-00019	HLW-MJ-HSH-LIFT-00020	2 Ton Hook Adapter
	HLW-MJ-HSH-LIFT-00005	HLW-MJ-HSH-LIFT-00011	Discharge Chamber Lid Lifting Beam
	HLW-MJ-HSH-LIFT-00023	HLW-MJ-HSH-LIFT-00024	Panel Tip/Lift Beam
	HLW-MJ-HSH-LIFT-00025	HLW-MJ-HSH-LIFT-00026	Structural Frame Beam Lift Hook
	HLW-MJ-HSH-LIFT-00003	HLW-MJ-HSH-LIFT-00003	23½ Ton Adjustable Span Lifting Beam (shared between melter caves)
AJ	HLW-MH-HSH-MHAN-00032	HLW-MH-HSH-MHAN-00060	Decontamination Pit Shield Lid (Section 4.1.1.2.2.2)

Figure 4-3 – System HSH CMA Section Views North and South

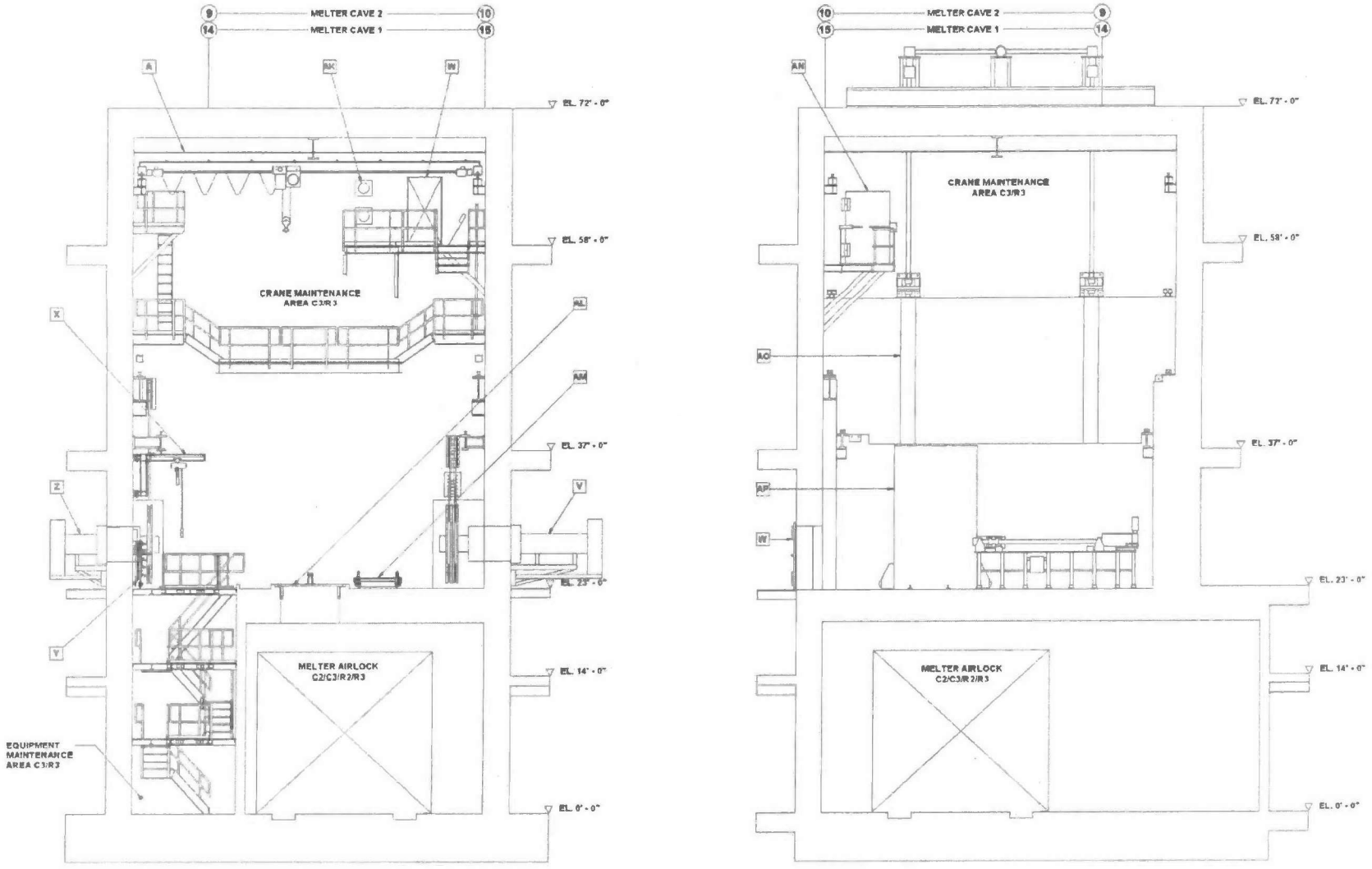

Tag	Melter Cave 1 CTNs (24590-)	Melter Cave 2 CTNs (24590-)	Description (Interface)
A	HLW-MJ-HSH-CRN-00011	HLW-MJ-HSH-CRN-00013	Maintenance Area Crane (Section 4.1.1.1.5)
V	HLW-MH-HSH-RCVY-00008	HLW-MH-HSH-RCVY-00018	Power Manipulator Crane Cable Reel (Section 4.1.1.1.2)
W	HLW-AD-HSH-DOOR-00017 HLW-AD-HSH-DOOR-00018	HLW-AD-HSH-DOOR-00016 HLW-AD-HSH-DOOR-00019	3 inch Shielded Personnel Access Door (SPAD) 23 ft (Section 4.1.1.2.3) 3 inch Shielded Personnel Access Door (SPAD) 58 ft (Section 4.1.1.2.3)
X	HLW-MJ-HSH-CRN-00015	HLW-MJ-HSH-CRN-00016	Maintenance Pit Jib Crane (Section 0)
Y	HLW-MH-HSH-MHAN-00036 HLW-MH-HSH-MHAN-00037 HLW-MH-HSH-MHAN-00038 HLW-MH-HSH-MHAN-00095	HLW-MH-HSH-MHAN-00082 HLW-MH-HSH-MHAN-00083 HLW-MH-HSH-MHAN-00084 HLW-MH-HSH-MHAN-00096	ADS Feed Pump Maintenance Template (Section 4.1.1.6.5) Feed Transfer Pump Maintenance Template Agitator Maintenance Template Maintenance Template Storage Rack
Z	HLW-MH-HSH-RCVY-00014	HLW-MH-HSH-RCVY-00019	25 Ton (Main) Crane Cable Reel (Section 4.1.1.1.1)
AK	Varies	Varies	Decontamination Joggle Shield Plugs (Section 4.1.1.3.4)
AL	TAG # HLW-2-0007 (plug) EMBNS188CA (frame)	TAG # HLW-2-0009 (plug) EMBNS188CK (frame)	Maintenance Area Shielded Floor Hatch and Plugs (Interface with HMH) Floor hatch and plugs provides shielding and containment between the crane maintenance area and the C2/C3 melter airlock when the hatch is in place and a clear opening for equipment import and export between the two areas when the plugs are removed. Hatch plugs are remotable and stackable to allow operation without manned entry into the crane maintenance area. The lifting bail on each plug can be removed to allow for an unobstructed flat storage area. The floor hatch is level with the plugs and flush with the top of the curb around it. Each of the three overlapping plugs that cover the hatch opening is a 2-1/4 inch thick steel slab with four guide/stacking legs and a remote style lifting bail. It provides a minimum clear opening of 6 ft wide by 7 ft 6 inch long between the crane maintenance area and the C2/C3 melter airlock below. See 24590-HLW-DD-S13T-00187, 24590-HLW-DD-S13T-00188, and 24590-HLW-DD-S13T-00189 for details.
AM	HLW-MQ-HSH-TRLY-00004	HLW-MQ-HSH-TRLY-00006	HLW Melter Shuttle Cart (Section 4.1.1.6.2)
AN	HLW-AD-HSH-DOOR-00013	HLW-AD-HSH-DOOR-00015	12" Shielded Personnel Access Door (Section 4.1.1.2.4)
AO	HLW-AD-HSH-DOOR-00008	HLW-AD-HSH-DOOR-00003	Crane Maintenance Vertical Shield Door (Section 4.1.1.2.2.1)
AP	HLW-AD-HSH-DOOR-00007	HLW-AD-HSH-DOOR-00004	Crane Maintenance Horizontal Shield Door (Section 4.1.1.2.2.1)

Figure 4-4 – System HSH CDA Section Views North and South

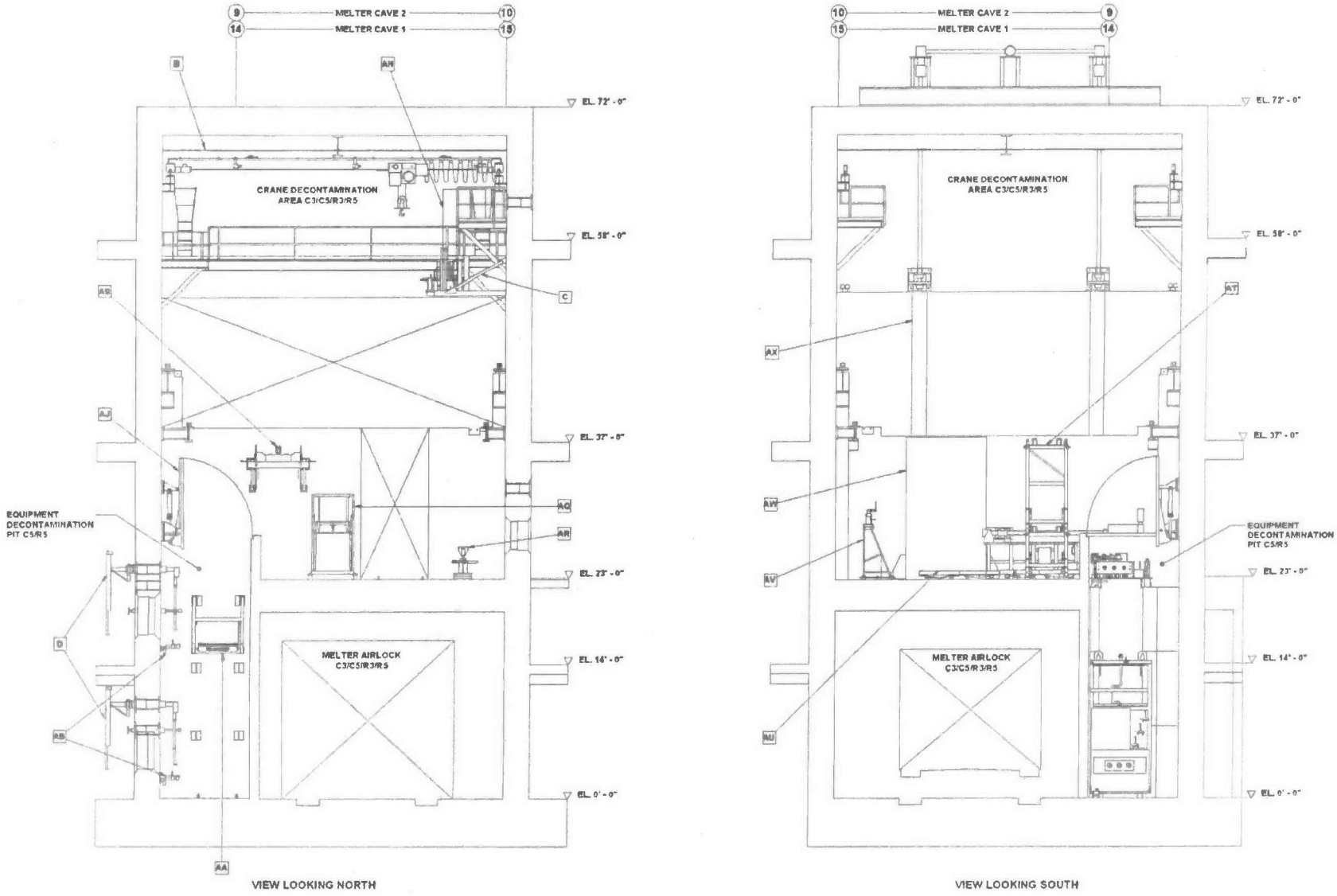

Tag	Melter Cave 1 CTNs (24590-)	Melter Cave 2 CTNs (24590-)	Description (Interface)
B	HLW-MJ-HSH-CRN-00010	HLW-MJ-HSH-CRN-00012	Decontamination Area Crane (Section 4.1.1.1.4)
C	HLW-MH-HSH-MHAN-00033 HLW-MH-HSH-MHAN-00034 HLW-MH-HSH-MHAN-00035 HLW-MH-HSH-MHAN-00097	HLW-MH-HSH-MHAN-00079 HLW-MH-HSH-MHAN-00080 HLW-MH-HSH-MHAN-00081 HLW-MH-HSH-MHAN-00098	ADS Pump Decontamination Template (Section 4.1.1.6.5) Transfer Pump Decontamination Template Agitator Decontamination Template Decontamination Template Storage Rack
D	North to South and Top to Bottom HLW-MJ-HSH-MANIP-00012 HLW-MJ-HSH-MANIP-00015 HLW-MJ-HSH-MANIP-00014 HLW-MJ-HSH-MANIP-00011	North to South and Top to Bottom HLW-MJ-HSH-MANIP-00025 HLW-MJ-HSH-MANIP-00028 HLW-MJ-HSH-MANIP-00027 HLW-MJ-HSH-MANIP-00024	Master Slave Manipulator (Section 4.1.1.3.2)
AA	HLW-MH-HSH-MHAN-00018	HLW-MH-HSH-MHAN-00059	Equipment Decontamination Area Turntable (Section 4.1.1.6.7)
AB	Top to Bottom HLW-MZ-HSH-BENCH-00011 HLW-MZ-HSH-BENCH-00012	Top to Bottom HLW-MZ-HSH-BENCH-00013 HLW-MZ-HSH-BENCH-00014	Equipment Decontamination Pit Shelf (Section 4.1.1.6.8)
AJ	HLW-MH-HSH-MHAN-00032	HLW-MH-HSH-MHAN-00060	Decontamination Pit Shield Lid (Section 4.1.1.2.2.2)
AN	HLW-AD-HSH-DOOR-00013	HLW-AD-HSH-DOOR-00015	12 inch Shielded Personnel Access Door (Section 4.1.1.2.4)
AQ	HLW-MH-HSH-MHAN-00041	HLW-MH-HSH-MHAN-00057	Parts Washer (Section 4.1.1.6.9)
AR	HLW-MH-HSH-MHAN-00011	HLW-MH-HSH-MHAN-00055	Crane Decontamination System (Section 4.1.1.6.10)
AS	HLW-MJ-HSH-LIFT-00013 HLW-MJ-HSH-LIFT-00021	HLW-MJ-HSH-LIFT-00014 HLW-MJ-HSH-LIFT-00022	4 ½ Ton Equipment Template Lifting Beam (all Section 4.1.1.6.5) Equipment Template Lifting Beam Storage Rack
AT	HLW-MH-HSH-MHAN-00010	HLW-MH-HSH-MHAN-00064	Equipment Stand (Section 4.1.1.6.3)
AU	HLW-MH-HSH-MHAN-00017	HLW-MH-HSH-MHAN-00058	Decontamination Area Catch Pans (Section 4.1.1.6.4)
AV	HLW-MH-HSH-MHAN-00007	HLW-MH-HSH-MHAN-00053	MSM Decontamination Stand (Section 4.1.1.3.2)
AW	HLW-AD-HSH-DOOR-00005	HLW-AD-HSH-DOOR-00002	Crane Maintenance Horizontal Shield Door (Section 4.1.1.2.2.1)
AX	HLW-AD-HSH-DOOR-00006	HLW-AD-HSH-DOOR-00001	Crane Decontamination Vertical Shield Door (Section 4.1.1.2.2.1)

Figure 4-5 – System HSH Plan View at Elevation +37 FT

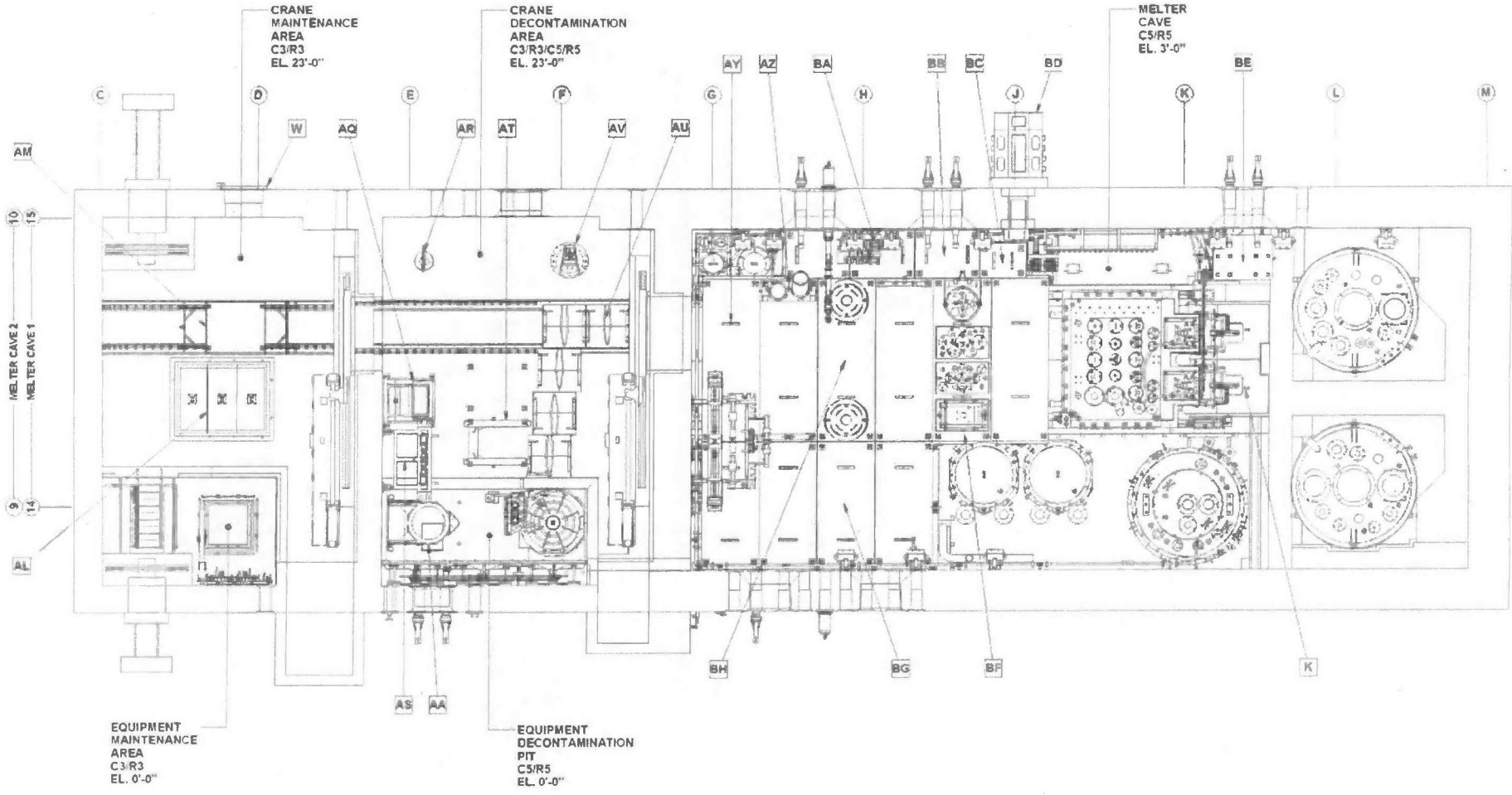

Tag	Melter Cave 1 CTNs (24590-)	Melter Cave 2 CTNs (24590-)	Description (Interface)
K	HLW-MH-HSH-MHAN-00028 HLW-MH-HSH-MHAN-00029	HLW-MH-HSH-MHAN-00075 HLW-MH-HSH-MHAN-00076	Canister Pour Tunnel Small and Large Cover Plates (Section 4.1.1.3.8)
W	HLW-AD-HSH-DOOR-00017 HLW-AD-HSH-DOOR-00018	HLW-AD-HSH-DOOR-00016 HLW-AD-HSH-DOOR-00019	3 inch Shielded Personnel Access Door (SPAD) 23 ft (Section 4.1.1.2.3) 3 inch Shielded Personnel Access Door (SPAD) 58 ft (Section 4.1.1.2.3)
AA	HLW-MH-HSH-MHAN-00018	HLW-MH-HSH-MHAN-00059	Equipment Decontamination Area Turntable (Section 4.1.1.6.7)
AL	TAG # HLW-2-0007 (plug) EMBNS188CA (frame)	TAG # HLW-2-0009 (plug) EMBNS188CK (frame)	Refer to previous Tag AL.
AM	HLW-MQ-HSH-TRLY-00004	HLW-MQ-HSH-TRLY-00006	HLW Melter Shuttle Cart (Section 4.1.1.6.2)
AQ	HLW-MH-HSH-MHAN-00041	HLW-MH-HSH-MHAN-00057	Parts Washer (Section 4.1.1.6.3)
AR	HLW-MH-HSH-MHAN-00011	HLW-MH-HSH-MHAN-00055	Crane Decontamination System (Section 4.1.1.6.10)
AS	HLW-MJ-HSH-LIFT-00013 HLW-MJ-HSH-LIFT-00021	HLW-MJ-HSH-LIFT-00014 HLW-MJ-HSH-LIFT-00022	4 ½ Ton Equipment Template Lifting Beam (all Section 4.1.1.6.5) Equipment Template Lifting Beam Storage Rack
AT	HLW-MH-HSH-MHAN-00010	HLW-MH-HSH-MHAN-00064	Equipment Stand (Section 4.1.1.6.3)
AU	HLW-MH-HSH-MHAN-00017	HLW-MH-HSH-MHAN-00058	Decontamination Area Catch Pans (Section 4.1.1.6.4)
AV	HLW-MH-HSH-MHAN-00007	HLW-MH-HSH-MHAN-00053	MSM Decontamination Stand (Section 4.1.1.3.2)
AY	HLW-MH-HSH-MHAN-00020	HLW-MH-HSH-MHAN-00070	False Floor Panels Alleyway (Section 4.1.1.4.2)
AZ	HLW-MH-HSH-MHAN-00093	HLW-MH-HSH-MHAN-00094	Waste Basket Loading Stand (Section 4.1.1.7.3)
BA	HLW-FH-HSH-TOOL-00013	HLW-FH-HSH-TOOL-00057	Hydraulic Fixed Shears (Section 4.1.1.7.1)
BB	HLW-MH-HSH-MHAN-00045	HLW-MH-HSH-MHAN-00087	False Floor Panels Sorting (Section 4.1.1.4.2)
BC	HLW-MH-HSH-MHAN-00118	HLW-MH-HSH-MHAN-00119	False Floor Panels Posting (Section 4.1.1.4.2)
BD	HLW-DD-HSH-TWDVC-00001 HLW-M0-HSH-GB-00001	HLW-DD-HSH-TWDVC-00002 HLW-M0-HSH-GB-00002	Posting Port and Glovebox (Section 4.1.1.2.1)
BE	HLW-MH-HSH-MHAN-00099	HLW-MH-HSH-MHAN-00100	Tool Storage Table (Section 4.1.1.4.3)
BF	HLW-MH-HSH-MHAN-00043 HLW-MY-HSH-BSKT-00001 HLW-PY-HSH-BSKT-00003 HLW-MH-HSH-MHAN-00019 HLW-MH-HSH-MHAN-00022 HLW-MH-HSH-MHAN-00023	HLW-MH-HSH-MHAN-00085 HLW-PY-HSH-BSKT-00004 HLW-PY-HSH-BSKT-00006 HLW-MH-HSH-MHAN-00069 HLW-MH-HSH-MHAN-00072 HLW-MH-HSH-MHAN-00073	False Floor Panels Alleyway Consumables (Section 4.1.1.4.4) Consumable Storage Bucket (Section 4.1.1.4.6) Glass Frit Addition Assembly (not shown) (Section 4.1.1.4.6) Bubbler Consumable Template (Section 4.1.1.4.4) Miscellaneous Consumable Template (Section 4.1.1.4.4) Discharge Heater Consumable Template (Section 4.1.1.4.4)
BG	HLW-MH-HSH-MHAN-00027	HLW-MH-HSH-MHAN-00074	False Floor Panels Breakdown (Section 4.1.1.4.2)
BH	HLW-MH-HSH-MHAN-00122	HLW-MH-HSH-MHAN-00123	False Floor Panels Alleyway Storage (Section 4.1.1.4.2)

Figure 4-6 – System HSH MC Section View North

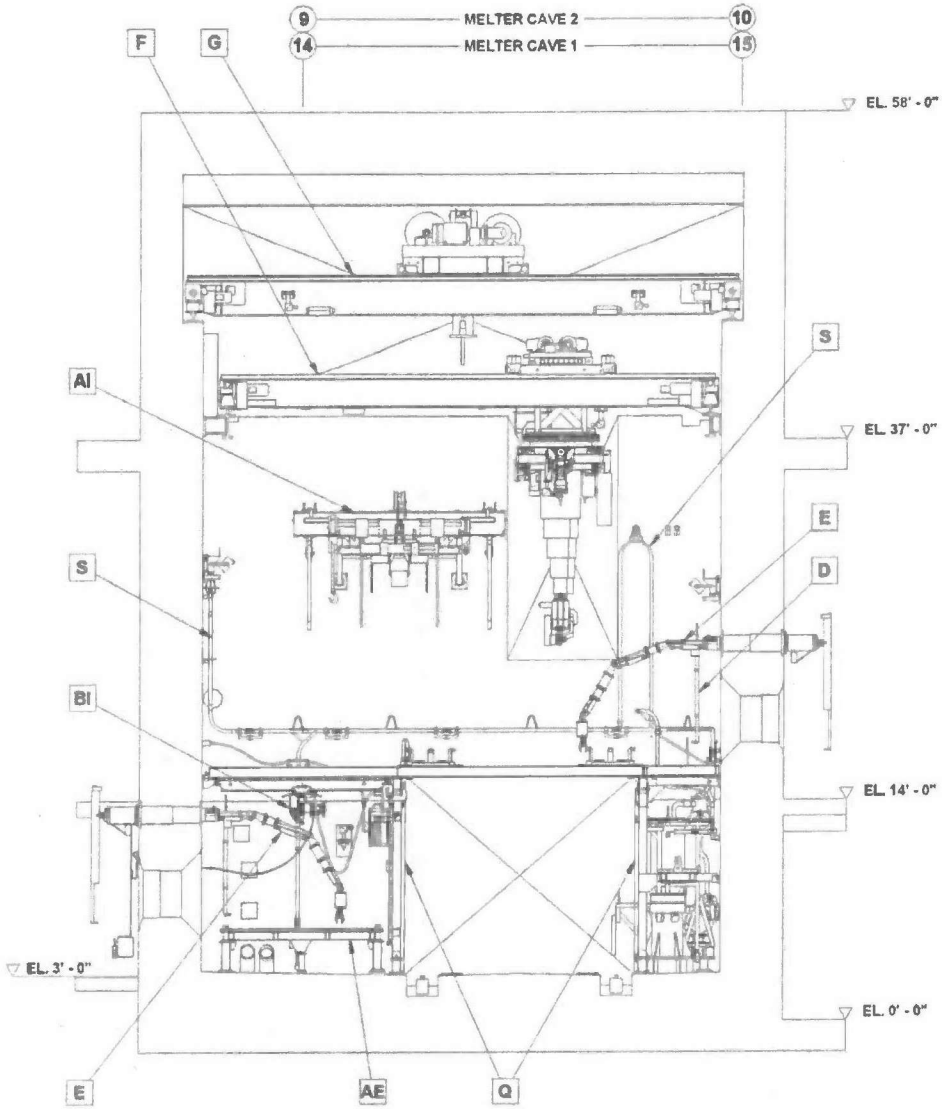

Tag	Melter Cave 1 CTNs (24590-)	Melter Cave 2 CTNs (24590-)	Description (Interface)
D	(East Wall North to South) HLW-MJ-HSH-MANIP-00005 HLW-MJ-HSH-MANIP-00007 HLW-MJ-HSH-MANIP-00006 HLW-MJ-HSH-MANIP-00008 HLW-MJ-HSH-MANIP-00009	(East Wall North to South) HLW-MJ-HSH-MANIP-00018 HLW-MJ-HSH-MANIP-00019 HLW-MJ-HSH-MANIP-00020 HLW-MJ-HSH-MANIP-00021 HLW-MJ-HSH-MANIP-00022	Master Slave Manipulator (Section 4.1.1.3.2)
E	HLW-MJ-HSH-MANIP-00004	HLW-MJ-HSH-MANIP-00017	Sorting Table Hydraulic Power Manipulator (Section 4.1.1.3.1)
F	HLW-MJ-HSH-MANIP-00010	HLW-MJ-HSH-MANIP-00023	Power Manipulator Crane (with 1 Ton Auxiliary Hoist) (Section 4.1.1.1.2)
G	HLW-MJ-HSH-CRN-00001	HLW-MJ-HSH-CRN-00014	25 Ton (Main) Crane (Section 4.1.1.1.1)
Q	HLW-MZ-HSH-BENCH-00001 HLW-MZ-HSH-BENCH-00002	HLW-MZ-HSH-BENCH-00006 HLW-MZ-HSH-BENCH-00007	False Floor Panels Structural Frame (Section 4.1.1.4.5) Breakdown Area Enclosure Panels (Section 4.1.1.4.5)
S	HLW-MH-HSH-MHAN-00016	HLW-MH-HSH-MHAN-00068	Central Vacuum System (Section 4.1.1.6.1)
AI	HLW-MJ-HSH-LIFT-00006 HLW-MJ-HSH-LIFT-00004 HLW-MJ-HSH-LIFT-00001 HLW-MJ-HSH-LIFT-00002 HLW-MJ-HSH-LIFT-00015 HLW-MJ-HSH-LIFT-00017 HLW-MJ-HSH-LIFT-00019 HLW-MJ-HSH-LIFT-00005 HLW-MJ-HSH-LIFT-00023 HLW-MJ-HSH-LIFT-00025 HLW-MJ-HSH-LIFT-00003	HLW-MJ-HSH-LIFT-00012 HLW-MJ-HSH-LIFT-00010 HLW-MJ-HSH-LIFT-00007 HLW-MJ-HSH-LIFT-00008 HLW-MJ-HSH-LIFT-00016 HLW-MJ-HSH-LIFT-00018 HLW-MJ-HSH-LIFT-00020 HLW-MJ-HSH-LIFT-00011 HLW-MJ-HSH-LIFT-00024 HLW-MJ-HSH-LIFT-00026 HLW-MJ-HSH-LIFT-00003	Melter Cave Lifting Beam Storage Rack (all Section 4.1.1.1.7) ½ Ton Adjustable Span Lifting Beam 3 Ton Adjustable Span Lifting Beam 10 Ton Adjustable Span Lifting Beam ½ Ton Hook Adapter 3 Ton Hook Adapter 2 Ton Hook Adapter Discharge Chamber Lid Lifting Beam Panel Tip/Lift Beam Structural Frame Beam Lift Hook 23½ Ton Adjustable Span Lifting Beam (shared between melter caves)
AE	HLW-MZ-HSH-BENCH-00003	HLW-MZ-HSH-BENCH-00008	Breakdown Table (Section 4.1.1.8.4)
BI	HLW-MH-HSH-RCVY-00013	HLW-MH-HSH-RCVY-00021	Breakdown Area Hoist (Section 4.1.1.1.3)

4.1.1.1 Description of Mechanical Handling Equipment

System HSH contains a variety of equipment necessary to accomplish the required functions while maintaining operations and maintenance activities As Low As Reasonably Achievable (ALARA). This section provides design details for System HSH equipment.

Generically, System HSH mechanical handling equipment is designed to meet operational and ALARA requirements, with a nominal plant life of 40 years to minimize worker exposure by reducing maintenance and replacement activities. Where commercially available components do not have a design life of 40 years, the equipment is designed to facilitate maintenance activities by having remote fasteners, electrical connectors etc., and the use of modularization to facilitate remote handling maintenance and replacement activities. The design of in cave equipment has been simplified to improve reliability and maintainability where practical. High maintenance components such as vertical shield door drive motors and crane slip ring brushes have been located out cave. Features to aid decontamination, such as flat smooth surfaces, elimination of crevices etc., are incorporated into the design. Materials and coatings have been selected to withstand the radiological environment, and withstand decontamination. Wherever possible, permanently lubricated, sealed for life components (bearings) are used to reduce maintenance.

4.1.1.1.1 Main 25 Ton Crane and Cable Reel

Melter Cave 1, 24590-HLW-MJ-HSH-CRN-00001 (Main 25 Ton Crane, CM, SC-II)
Melter Cave 2, 24590-HLW-MJ-HSH-CRN-00014 (Main 25 Ton Crane, CM, SC-II)
Melter Cave 1, 24590-HLW-MH-HSH-RCVY-00014 (Cable Reeling System, SC, SC-I)
Melter Cave 2, 24590-HLW-MH-HSH-RCVY-00019 (Cable Reeling System, SC, SC-I)

Refer to: 24590-WTP-3PS-MJKG-T0003, *Engineering Specification for CMAA 70 High Integrity Crane*

Refer to: 24590-HLW-M0D-HSH-00013, *24590-HLW-MJ-HSH-CRN-00001 – Melter 1 Cave Crane Data Sheet*

Refer to: 24590-HLW-M2D-HSH-00001, *24590-HLW-MH-HSH-RCVY-00014 – Melter 1 Cave Main Crane Cable Reeling System Data Sheet*

The melter cave overhead main crane is a remotely operated 25 ton safe working load (SWL) capacity overhead, top running, bridge process crane that is located on corbel mounted rails in the melter cave and wall mounted rails supported on structural steel work in the CMA and CDA. The crane rails extend from the melter cave through the decontamination area vertical shield door openings into the CDA then the maintenance area vertical shield door openings into the CMA. The crane is designated as commercial (CM), non-safety, seismic category (SC) II, which requires the crane to remain in place during, and after a seismic event. The walls remain the same thickness during the transition between the CMA and the CDA and the supporting steelwork remains the same design. The 25 ton melter cave cranes primary purpose is to handle the large melter cave process equipment including pumps, agitators and vessels and mechanical handling equipment including crane deployed tools. It also provides operator viewing capabilities through cameras and illumination to the work area through bridge mounted lights.

There are no on-board logic control systems mounted on the crane, control and power to the crane are provided via a multi core umbilical cable deployed into the melter cave from a mono-spiral cable reel located in the CMA. The cable is tethered to the west end truck of the bridge and terminated on the cable reel in the CMA. A diverter assembly directs the cable from the cable reel enclosure into the cable trough in the CMA. The cable reel is

driven through wall, locating the cable reel drive system and electrical slip ring assemblies out cave for maintenance in a C2 environment. The cable reeling system is Safety Class (SC), Seismic Category I (SC-I), having a safety function to remain in place during a seismic design basis event (DBE) as not to create a 6 in. or greater diameter (equivalent) opening in the C5 boundary.

The umbilical cable is supported by guide rollers in a cable trough along the entire length of travel from the melter cave, through the CDA and into the CMA. At the shield walls between these areas, the troughs are interupted and an ultra-high molecular weight polyethylene pad supports the cable. The trough is open on top and bottom within the melter cave. The trough has a closed bottom in the CDA and CMA and has a split rubber flap on top to allow the cable and cable tow arm to pass through. The trough and cover assist in contamination control in these areas from the cable. Drain nozzles are provided on the trough to allow spray lance decontamination fluids to be directed to a room sump via a temporarily connected hose.

The crane is moved to a park position in the crane decontamination or maintenance area, where inspections can be performed in low radiation / contamination areas and without unsafe interferences occurring during the inspections. The crane is controlled via the integrated control network (ICN) from a Local Operator Interface (LOI).

The long travel of the crane is in the north/south direction, and the cross travel is in the east/west direction. The main hoist has a variable 0-25 ft/min drive, and a single speed recovery drive of 4 ft/min. The main bridge has a variable 0-50 ft/min drive, and a single speed recovery drive of 5 ft/min. The main trolley has a variable 0-25 ft/min drive, and a single speed recovery drive of 5 ft/min. The powered rotate hook has a single speed drive of nominal rotational speed of 1-2 rpm. A tool power outlet is provided on the lower hook block to power crane deployed tools. Closed Circuit Television Video (CCTV) and lighting is installed on the crane to aid viewing of in-cave handling activities, direct observation of the crane movements can be made from windows in both the melter cave and CDA.

The crane is provided with a recovery drive on the 25 ton hoist in the event of the primary drive failure. The trolley and bridge are supplied with jack down wheels that are deployed in the event of drive failure or wheel seizure. The jack down wheels lift the failed wheel clear of the rail, and provide drive to return the crane to the CMA. The crane is of modular construction, utilizing quick connectors that facilitate removal and replacement of failed components, and is designed to withstand decontamination without degrading functionality of the electrical or mechanical components. Permanently lubricated, sealed for life components are used wherever possible, where not provided, lubrication systems are designed to be accessible to aid maintenance. The cable reeling system can also be used to pull the crane back to the CMA in the event of bridge drive system failure. See Figure 4-7

Figure 4-7 – Overhead Main 25 Ton Crane

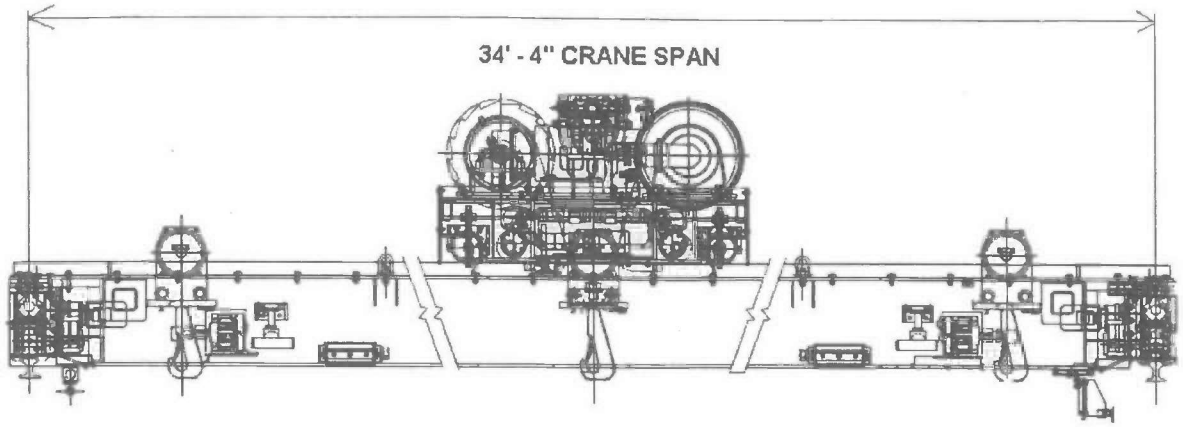

4.1.1.1.2 Power Manipulator Crane and Cable Reels

Melter Cave 1, 24590-HLW-MJ-HSH-MANIP-00010 (Power Manipulator Crane, CM, SC-II)
Melter Cave 2, 24590-HLW-MJ-HSH-MANIP-00023 (Power Manipulator Crane, CM, SC-II)
Melter Cave 1, 24590-HLW-MH-HSH-RCVY-00008 (Cable Reeling System, SC, SC-I)
Melter Cave 2, 24590-HLW-MH-HSH-RCVY-00018 (Cable Reeling System, SC, SC-I)

Refer to: 24590-WTP-3PS-MJKG-T0004, *Engineering Specification for High Integrity Cranes with Power Manipulator*

Refer to: 24590-HLW-M0D-HSH-00014, *24590-HLW-MJ-HSH-MANIP-00010 – Overhead Mast Power Manipulator with Slewing Hoist Data Sheet*

Refer to: 24590-HLW-MHD-HSH-00005, *24590-HLW-MH-HSH-RCVY-00008 –Cable Reeling System Data Sheet*

The melter cave overhead power manipulator crane with auxiliary 1 ton slewing hoist performs the majority of remote manipulation and tool deployment within the cave. It provides mobile remote handling capabilities throughout the melter cave, crane decontamination and crane maintenance areas.

The melter cave power manipulator crane is a remotely operated overhead, top running, bridge crane with a 150 lb rated power manipulator, a 1 ton SWL shoulder hook and a 1 ton SWL slewing hoist. It is located on wall mounted rails supported by structural steel work in the melter cave, CMA and CDA. The crane rails extend from the melter cave through the decontamination area vertical shield door openings into the CDA then the maintenance area vertical shield door openings into the CMA. Due to the telescopic mast and under trolley mounted slewing hoist, both the vertical and horizontal shield doors need to be open to traverse the power manipulator crane between the three areas. The power manipulator crane is designated as commercial (CM), non-safety, seismic category II, which requires it to remain in place during, and after a seismic event. The shield walls remain the same thickness during the transition between the CMA and the CDA and the supporting steelwork remains the same design. The power manipulator cranes primary purpose is to support maintenance activities in the melter cave including remote handling of all small components, flexible jumpers and power manipulator

deployed tools. The manipulator hand provides a zero wall approach and the slewing hoist provides a 6 in. wall approach. It also provides operator viewing capabilities through cameras and illumination to the work area through bridge mounted lights.

There are no on-board logic control systems mounted on the power manipulator crane, control and power to the crane are provided via twin side by side multi core umbilical cables deployed into the melter cave from a twin mono-spiral cable reel located in the CMA. The cables are tethered to the east end truck of the bridge and terminated on the cable reels in the CMA. A diverter assembly directs the cables from the cable reel enclosure into the cable trough in the CMA. The cable reel assembly is driven through wall, locating the cable reel drive system and electrical slip ring assemblies out cave for maintenance in a C2 environment. The cable reeling system is SC, SC-I having a safety function to remain in place during a DBE seismic event as not to create a 6" or greater diameter (equivalent) opening in the C5 boundary.

The umbilical cables are supported by guide rollers in a cable trough along the entire length of travel from the melter cave, through the CDA and into the CMA. At the shield walls between these areas, the troughs are interupted and an ultra-high molecular weight polyethylene pad supports the cable. The trough is open on top and bottom within the melter cave. The trough has a closed bottom in the CDA and CMA and has a split rubber flaps on top to allow the cables and cable tow arms to pass through. The trough and cover assist in contamination control in these areas from the cable. Drain nozzles are provided on the trough to allow spray lance decontamination fluids to be directed to a room sump via a temporarily connected hose.

The crane is moved to a park position in the crane decontamination or maintenance area, where inspections can be performed in low radiation / contamination areas and without unsafe interferences occurring during the inspections. The telescopic mast may be fully lowered through the access openings in the equipment maintenance area platforms for timing belt inspections and replacement. The crane is controlled via the Integrated Control Network (ICN) from a Local Operator Interface (LOI).

The long travel of the power manipulator crane is in the north/south direction, and the cross travel is in the east/west direction. The telescopic mast moves vertically and the slewing hoist rotates about the mast centerline. The slewing hoist is also equipped with a jib travel motion that moves radially outward from the center of rotation. The mast hoist has a variable 0-25 ft/min drive, and a single speed recovery drive of 7.5 ft/min. The main bridge has a variable 0-50 ft/min drive, and a single speed recovery drive of 25 ft/min. The main trolley has a variable 0-25 ft/min drive, and a single speed recovery drive of 5 ft/min. The slewing hoist has a variable speed drive of 0-25 ft/min and cable cutters for recovery. The slewing hoist slewing motion has a single speed rotation of 1 rpm and a rotation range of ± 135° from due south. Recovery of the slewing hoist rotation is by slipping the clutch. The slewing hoist jib has a fixed speed of 10 ft/min. The slewing hoist powered rotate hook has a single speed rotation of 1 rpm. A tool power outlet is provided on the lower hook block to power crane deployed tools. Closed Circuit Television Video (CCTV) and lighting is installed on the crane to aid viewing of in-cave handling activities, direct observation of the crane movements can be made from windows in both the melter cave and CDA.

The power manipulator crane is provided with a recovery drive on the telescopic mast in the event of the primary drive failure. The trolley and bridge are supplied with jack down wheels that are deployed in the event of drive failure or wheel seizure. The jack-down wheels lift the failed wheel clear of the rail. The crane is of modular construction, utilizing quick connectors that facilitate removal and replacement of failed components, and is designed to withstand decontamination without degrading functionality of the electrical or mechanical components. Permanently lubricated, sealed for life components are used wherever possible, where not provided, lubrication systems are designed to be accessible to aid maintenance. The cable reeling system can also be used to

pull the crane back to the CMA in the event of bridge drive system failure. See Figure 4-8 for an overall view of the power manipulator crane.

The manipulator arm is a PaR model 4350 with a model 3000 side pivot wrist and a 5 in. opening parallel finger hand. It is equipped with eight degrees of freedom including; shoulder rotate, shoulder pivot, elbow pivot, wrist pivot, wrist side pivot, wrist extension, wrist rotate and parallel hand open / close. It is nominally rated at 150 lbs except when the wrist side pivot is under rotational load. When the wrist side pivot is in any orientation other than straight in line with the upper wrist, the load rating of the arm is 75 lbs. The hand is equipped with a pipe notch that enables closing around round objects. Each finger has a precision hole drilled through to allow attaching customized accessories to the standard hand. The manipulator is equipped with a wrist mounted camera that is magnetically mounted to the wrist and is equipped with a remotely operable quick connector. This camera may be mounted on the top or side of the wrist depending upon the viewing requirements of the task. Magnetic mounting enables rapid and remote camera repositioning and replacement. The manipulator is also equipped with a hook hand that provides an 800 lb grip force. Remote change-out stands are provided for the parallel jaw hand and hook hand. A tool power outlet is provided on the slewing hoist lower hook block and near the bottom of the telescopic mast to power crane or manipulator deployed tools. A vendor proprietary tool power outlet is also provided on the arm itself. The entire manipulator arm is capable of being remotely placed into a stand and disconnected or connected from the mast with the aid of MSMs. Once disconnected, seal plugs can be remotely placed over the arm end and mast end electrical sockets to allow decontamination without degradation of the electronics. A separate transport frame allows the arm to be remotely hoisted from the stand and transported. The telescopic mast is equipped with an integral wash down system that can be remotely connected to the crane decontamination equipment. Mast wash down should be performed over the decontamination tank to minimize the spread of contamination.

Figure 4-8 – Overhead Power Manipulator Crane

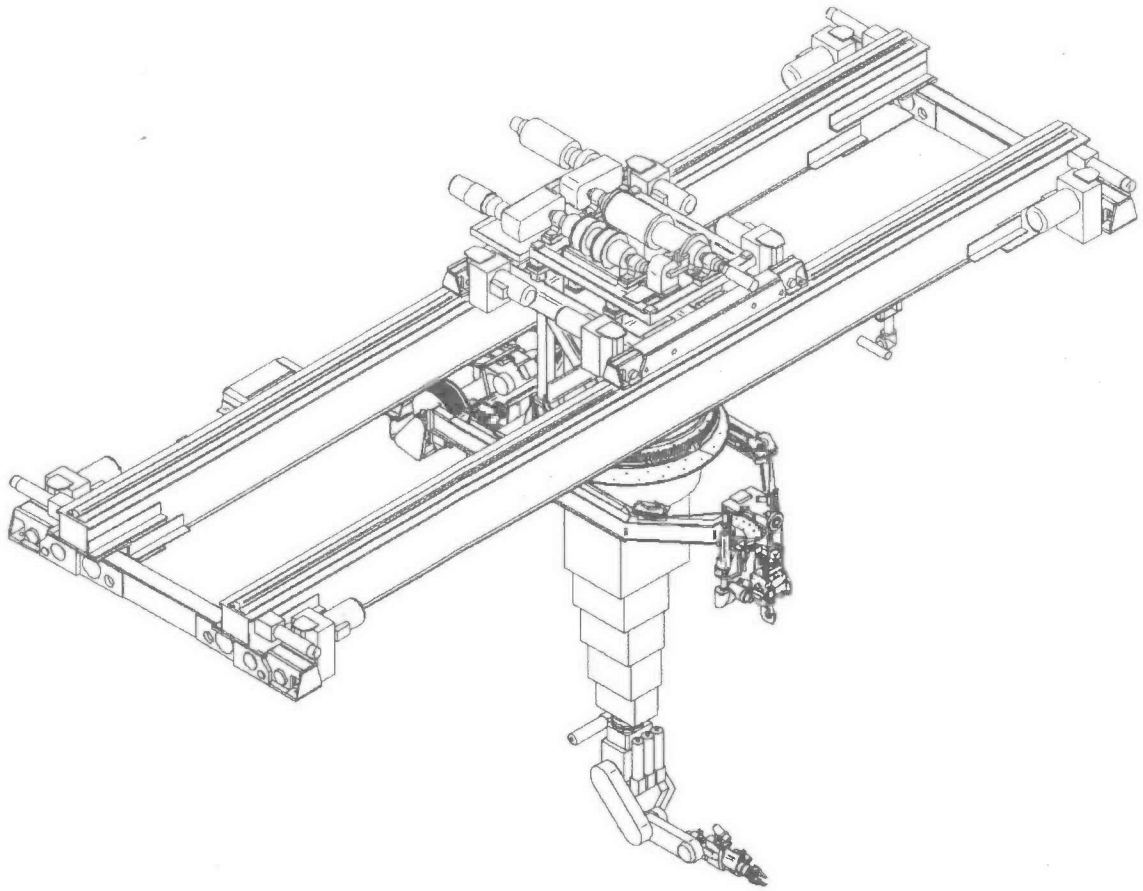

4.1.1.1.3 Breakdown Area Hoist

Melter Cave 1, 24590-HLW-MH-HSH-RCVY-00013
Melter Cave 2, 24590-HLW-MH-HSH-RCVY-00021

Non-safety, SC-III

Refer to: 24590-WTP-3PS-MQL0-T0002, *Engineering Specification for Mechanical Handling Custom Designed and Fabricated Equipment*

Refer to: 24590-HLW-M0-HSH-00058001, *HLW Vitrification System HSH Design Proposal Drawing Breakdown Area Hoist Arrangement*

Refer to: 24590-HLW-M0-HSH-00058002, *HLW Vitrification System HSH Design Proposal Drawing Breakdown Area Hoist Sections and Details*

The melter cave breakdown area hoist provides lifting capability over the breakdown table independent of the main and power manipulator overhead cranes. This allows breakdown activities to be undertaken simultaneously with melter change out. It is a remotely operated 1.1 ton SWL low headroom beam mounted chain hoist. The hoist is mounted on the bottom flange of an "S" beam for motion across the table. In turn, the "S" beam is supported at each end by wheeled trucks utilizing forklift style combination bearings to form a basic bridge structure. The trucks are supported and guided in matched profile channel shaped rails supported by the false floor panel structural frame in the northwest corner of the melter cave. The hoist and solenoid valve rack are designated as commercial (CM), non-safety, seismic criteria III. Sub-components of the hoist such as the air hose reel, out-cave control panel, and jumpers have no seismic criteria applied. The breakdown area hoists primary purpose is to handle the remote size reduction equipment and size reduced components within the breakdown area.

There are no on-board logic control systems mounted on the crane, control to the crane is provided via a coil cord jumper from a wall mounted remotely replaceable junction box. Power to the crane is from an out cave compressed air supply. Both the control cable and air hose are routed through joggle penetrations that drain to the in cave side. The air hose is connected to a remotely replaceable wall mounted spring rewind hose reel. All hoist air is vented within the melter cave and supply hoses are equipped with check valves to prevent backflow. The hoist is manually controlled via a pendant located out cave at the breakdown area platform. To allow for maintenance or recovery, the entire bridge is capable of being remotely removed from the support rails with an overhead crane and lift beam. Once suspended, the hoist can be remotely removed from the bridge girder by the breakdown area hydraulic power manipulator. The solenoid air control valves on the hoist are gang mounted on a common rack that is equipped with quick disconnects to allow the entire solenoid valve rack to be remotely removed and replaced via MSMs. The wheeled end trucks are modular in design and are remotely replaceable. The entire bridge, hoist, solenoid valve rack, air hose reel and in-cave junction box can all be exported for decontamination and maintenance in the shielded CMA.

The long travel of the crane is in the north/south direction, and the cross travel is in the east/west direction. The hoist has a lifting full load rated speed of 22 ft/min and a lifting no load rated speed of 49 ft/min. The hoist has a lowering full load rated speed of 44 ft/min and a lowering no load rated speed of 22 ft/min. The bridge and trolley are equipped with tow cables to allow positioning of the hoist almost anywhere over the breakdown tables with the breakdown area hydraulic power manipulator. A Closed Circuit Television Video (CCTV) (north wall) and through wall lighting (west wall) is installed in the breakdown area to allow direct operator viewing of crane movements via the LOI or from either of the two breakdown area shield windows.

The bridge is of stainless steel construction and all components are designed to withstand decontamination without degrading functionality of the electrical or mechanical components. Permanently lubricated, sealed for life components are used wherever possible.

Figure 4-9 – Breakdown Area Hoist

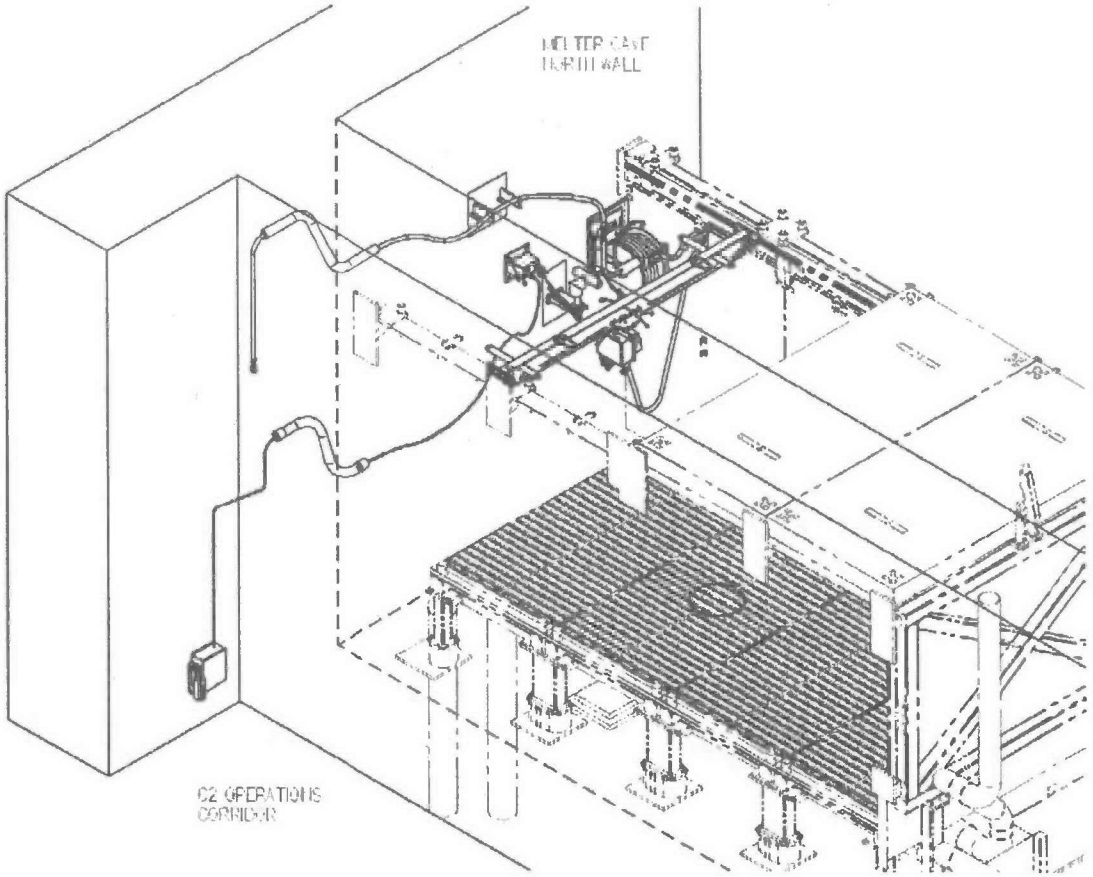

4.1.1.1.4 Decontamination Area Crane

Melter Cave 1, 24590-HLW-MJ-HSH-CRN-00010
Melter Cave 2, 24590-HLW-MJ-HSH-CRN-00012

Non-Safety, SC-III

Refer to: 24590-WTP-3PS-MJKG-T0002, *Engineering Specification for CMAA 74 Top Running and Under Running Single Girder & CMAA 70 Top Running Bridge & Gantry Type Multiple Girder EOT Cranes*

Refer to: 24590-HLW-M0D-HSH-00001, *24590-HLW-MJ-HSH-CRN-00010 – Melter 1 Decontamination Crane (Room H-0310) Data Sheet*

The CDA decontamination crane is a remotely operated 5 ton SWL capacity overhead, top running, single girder crane located on wall mounted rails supported on structural steel work in the CDA. The crane is designated as commercial (CM), non-safety, seismic criteria III. The 5 ton decontamination area cranes primary purpose is to handle process and mechanical handling equipment including pumps, agitators, melter consumables, decontamination templates and the equipment stand in the CDA. It is also used for remote decontamination of the

main melter cave crane and power manipulator crane with the crane decontamination system. It may also be used to support maintenance of the main melter cave crane and power manipulator crane.

There are no on-board logic control systems mounted on the crane, control and power to the crane are provided via a traditional festoon system deployed along the east wall of the CDA. The crane is moved to a park position at the north end of the crane decontamination area where inspections can be performed in low radiation / contamination areas and without unsafe interferences occurring during the inspections. The crane is controlled via a radio control pendant.

The long travel of the crane is in the north/south direction, and the cross travel is in the east/west direction. The hoist has a two speed drive of 10 and 32 ft/min and a self-contained hydraulic cable cutter for recovery. The bridge and trolley each have a two speed drive of 10 and 30 ft/min. The powered rotate hook has a two speed rotational drive of 0.5 and 1.5 rpm. A tool power outlet is provided on the lower hook block to power crane deployed tools. Closed Circuit Television Video (CCTV) and lighting is installed on the crane to aid viewing of remote handling activities, direct observation of the crane movements can be made from windows in the CDA or EDP.

The crane is provided with a stainless steel lower hook block and hook and is designed to withstand decontamination without degrading functionality of the electrical or mechanical components. Permanently lubricated, sealed for life components are used wherever possible, where not provided, lubrication systems are designed to be accessible to aid maintenance.

Figure 4-10 – Decontamination Area Crane

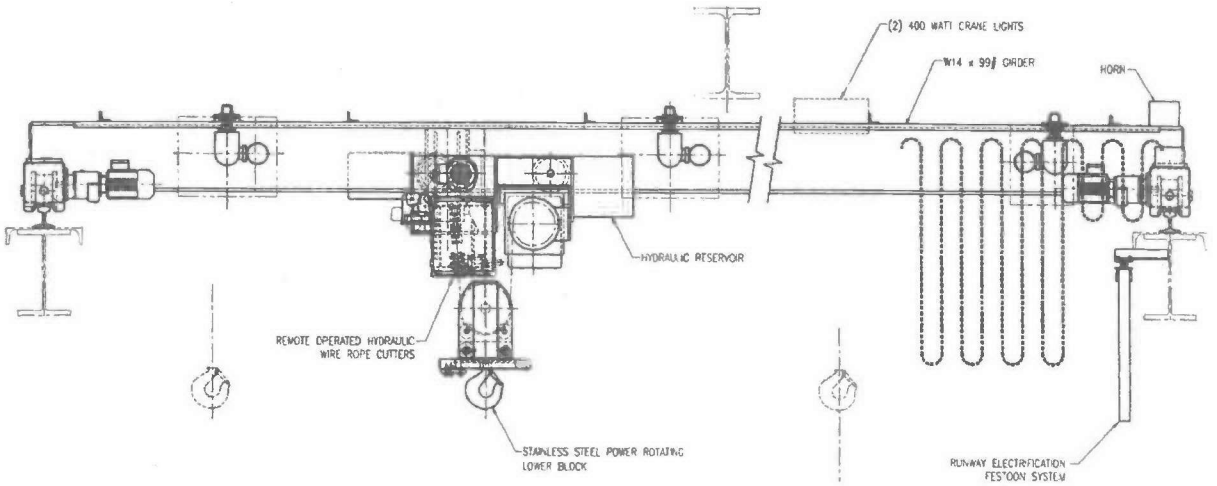

4.1.1.1.5 Maintenance Area Crane

Melter Cave 1, 24590-HLW-MJ-HSH-CRN-00011
Melter Cave 2, 24590-HLW-MJ-HSH-CRN-00013

Non-Safety, SC-III

Refer to: 24590-WTP-3PS-MJKG-T0002, *Engineering Specification for CMAA 74 Top Running and Under Running Single Girder & CMAA 70 Top Running Bridge & Gantry Type Multiple Girder EOT Cranes*
Refer to: 24590-HLW-M0D-HSH-00004, *24590-HLW-MJ-HSH-CRN-00011 – Melter 1 Maintenance Crane (Room H-0309) Data Sheet*

The CMA maintenance crane is a locally operated 5 ton SWL capacity overhead, top running, single girder crane located on wall mounted rails supported on structural steel work in the CMA. The crane is designated as commercial (CM), non-safety, seismic criteria III. The 5 ton maintenance area cranes primary purpose is to import process and mechanical handling equipment including pumps, agitators and melter consumables into the CMA from the System HMH C2/C3 melter airlock through the CMA floor hatch. It is also used to support maintenance of the main melter cave crane and power manipulator crane, to lift the crane maintenance area floor hatch sections and lift equipment from and to the shuttle cart.

There are no on-board logic control systems mounted on the crane, control and power to the crane are provided via a traditional festoon system deployed along the west wall of the CMA. The crane is moved to a park position at the north end of the crane maintenance area where inspections can be performed in low radiation / contamination areas and without unsafe interferences occurring during the inspections. The crane is controlled via a radio pendant.

The long travel of the crane is in the north/south direction, and the cross travel is in the east/west direction. The hoist has a two speed drive of 10 and 32 ft/min. The bridge and trolley each have a two speed drive of 10 and 30 ft/min.

Permanently lubricated, sealed for life components are used wherever possible, where not provided, lubrication systems are designed to be accessible to aid maintenance.

Figure 4-11 – Maintenance Area Crane

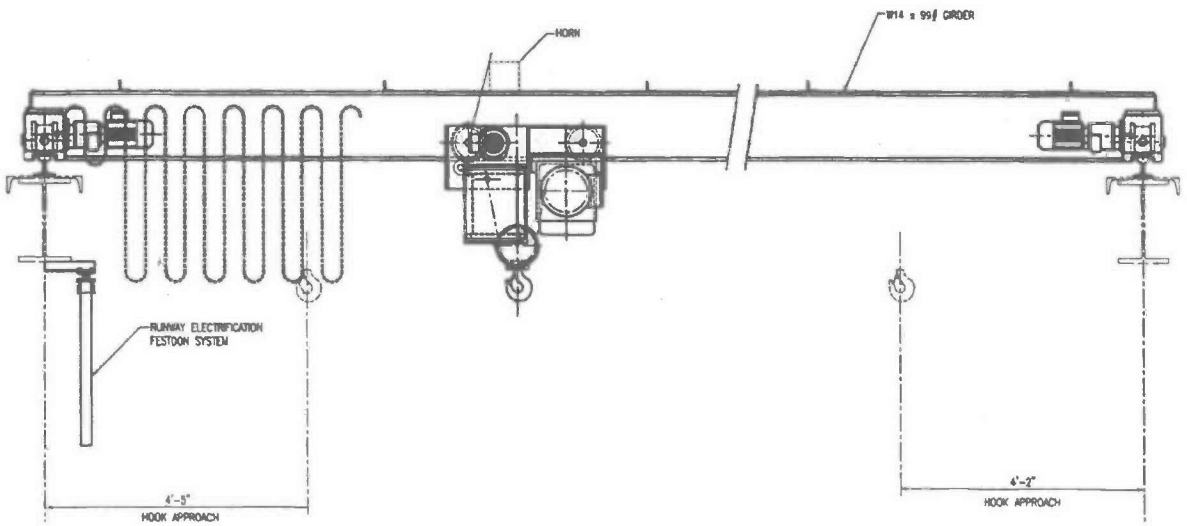

4.1.1.1.6 Maintenance Pit Jib Crane

Melter Cave 1, 24590-HLW-MJ-HSH-CRN-00015
Melter Cave 2, 24590-HLW-MJ-HSH-CRN-00016

Non-safety, SC-III

Refer to: 24590-WTP-3PS-MQL0-T0002, *Engineering Specification for Mechanical Handling Custom Designed and Fabricated Equipment*

Refer to: 24590-HLW-M0D-HSH-00277, *24590-HLW-MJ-HSH-CRN-00015 – Jib Crane Mechanical Handling Data Sheet*

The CMA maintenance pit jib crane is a locally operated 1 ton SWL capacity wall mounted jib crane with under running trolley and is located on the west wall of the CMA overtop of the equipment maintenance area platform. The crane is designated as commercial (CM), non-safety, seismic criteria III. The 1 ton maintenance pit jib cranes primary purpose is to hoist the maintenance templates from their storage rack to the maintenance platform and to support the maintenance activities of equipment supported on the templates.

There are no on-board logic control systems mounted on the crane, control and power to the crane are provided via an umbilical cable from the wall mounted disconnect switch. The crane is manually controlled via a pendant from the platform. It is located directly over top of the platform for inspections and hands on maintenance.

The hoist is a two speed drive with speeds of 6 and 17 ft/min. The jib and trolley motions are manual.

Permanently lubricated, sealed for life components are used wherever possible. Where not provided, lubrication systems are designed to be accessible to aid maintenance.

Figure 4-12 – Maintenance Area Jib Crane

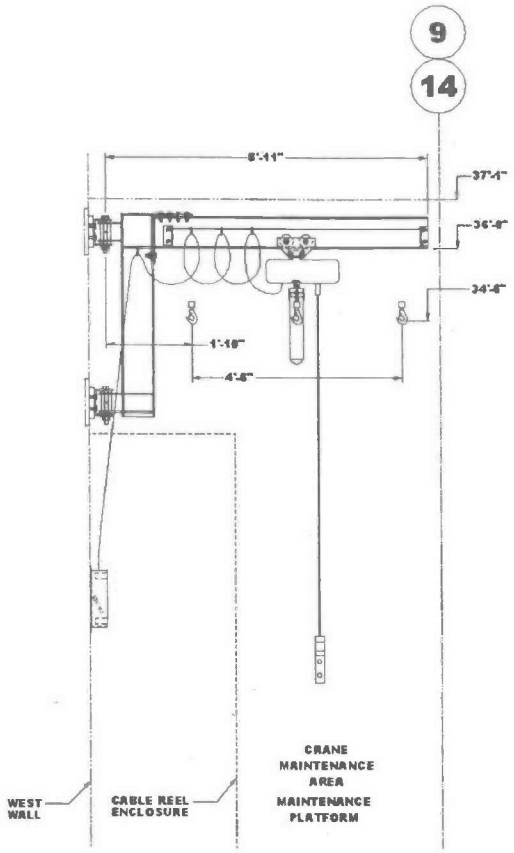

4.1.1.1.7 Lifting Devices and Storage Racks

Melter Cave 1, 24590-HLW-MJ-HSH-LIFT-00001 5 Ton Adjustable Span Lifting Beam
Melter Cave 1, 24590-HLW-MJ-HSH-LIFT-00002 10 Ton Adjustable Span Lifting Beam
Melter Cave 1 and 2, 24590-HLW-MJ-HSH-LIFT-00003 23½ Ton Adjustable Span Lifting Beam
Melter Cave 1, 24590-HLW-MJ-HSH-LIFT-00004 ½ Ton Adjustable Span Lifting Beam
Melter Cave 1, 24590-HLW-MJ-HSH-LIFT-00005 Discharge Chamber Lid Lifting Beam
Melter Cave 1, 24590-HLW-MJ-HSH-LIFT-00006 Melter Cave Lifting Beam Storage Rack
Melter Cave 2, 24590-HLW-MJ-HSH-LIFT-00007 5 Ton Adjustable Span Lifting Beam
Melter Cave 2, 24590-HLW-MJ-HSH-LIFT-00008 10 Ton Adjustable Span Lifting Beam
Melter Cave 2, 24590-HLW-MJ-HSH-LIFT-00010 ½ Ton Adjustable Span Lifting Beam
Melter Cave 2, 24590-HLW-MJ-HSH-LIFT-00011 Discharge Chamber Lid Lifting Beam
Melter Cave 2, 24590-HLW-MJ-HSH-LIFT-00012 Melter Cave Lifting Beam Storage Rack
Melter Cave 1, 24590-HLW-MJ-HSH-LIFT-00013 4 ½ Ton Equipment Template Lifting Beam
Melter Cave 2, 24590-HLW-MJ-HSH-LIFT-00014 4 ½ Ton Equipment Template Lifting Beam
Melter Cave 1, 24590-HLW-MJ-HSH-LIFT-00015 ½ Ton Hook Adapter
Melter Cave 2, 24590-HLW-MJ-HSH-LIFT-00016 ½ Ton Hook Adapter
Melter Cave 1, 24590-HLW-MJ-HSH-LIFT-00017 1 Ton Hook Adapter
Melter Cave 2, 24590-HLW-MJ-HSH-LIFT-00018 1 Ton Hook Adapter

Melter Cave 1, 24590-HLW-MJ-HSH-LIFT-00019 2 Ton Hook Adapter
Melter Cave 2, 24590-HLW-MJ-HSH-LIFT-00020 2 Ton Hook Adapter
Melter Cave 1, 24590-HLW-MJ-HSH-LIFT-00021 Equipment Template Lifting Beam Storage Rack
Melter Cave 2, 24590-HLW-MJ-HSH-LIFT-00022 Equipment Template Lifting Beam Storage Rack

Non-Safety, SC-II

Refer to: 24590-WTP-3PS-MJJ0-T0003, *Engineering Specification for Lifting Beams*

Refer to: 24590-HLW-M0X-M40T-00009, *Mechanical Handling Equipment List for HLW Systems HDH, HPH, HRH, and HSH*

To reduce the life cycle expense and space requirements of a unique lifting beam for each piece of equipment, System HSH provides several adjustable span lifting beams (ASLB) and hook adapters that are suitable for the majority of the lifted components in the melter cave and crane decontamination areas. All of the lifting devices and storage racks are identical in each melter cave except for the 23½ ton lifting beam which is shared between the two melter caves. This beam is shared between the two caves because of its low anticipated duty. It is only used for the two feed vessels and the submerged bed scrubber vessel. It is designed for decontamination and disassembly. A fixed span lifting beam for handling the melter discharge chamber lid is also provided in each melter cave but one may be chosen to be used for lid handling out cave and the other shared between the caves due to its equally low anticipated usage.

All lift beams and storage racks are predominately constructed of stainless steel to provide the 40 year service life and to be suitable for decontamination.

The melter cave adjustable span lifting beams are provided in ½ ton, 5 ton, 10 ton and 23½ ton capacities. The inside spread of the lifting beams varies from 10 in. on the ½ ton ASLB to 136 in. for the 23½ ton ASLB. Each ASLB is provided with pointers and scale indicators on the top and front to allow operator viewing with the main 25 ton crane while span adjustment is made with the power manipulator deployed nut runner while the beam is resting on the storage rack. The side plate hooks of the ASLBs are moved and guided along the beam by turning the adjustment nut on the ends of the beam.

Hook adapters are also provided in ½ ton, 1 ton and 2 ton capacities and range in length from 24 in. for the ½ ton hook adapter to 156 in. for the 1 ton hook adapter. The hook adapters allow access to lifting bails that would otherwise be obstructed by the crane hook block. The ½ ton hook adapter is designed for use with the crane deployed large impact wrench. The 1 ton hook adapter allows the solid waste basket to be set and retrieved from the 55 gallon drum through the waste transfer port. The 2 ton hook adapter allows other equipment, such as the melter pour spout, to be accessed without hook block interference.

The hooks on the ASLBs, 1 ton and 2 ton hook adapters are plate style deep hooks that are designed to securely fit round bails. The ½ ton hook adapter is a simple bent round bar hook. The lifting bails on the ½ ton ASLB and ½ ton hook adapter are stepped to allow a snug fit with either the main 25 ton overhead crane hook or the 1 ton slewing hoist hook of the overhead power manipulator crane. All other hook adapter and ASLB bails are designed to interface with the main 25 ton overhead crane. The hook plates on the 10 ton and 23½ ton ASLBs are long enough to allow tipping the System HOP HEME or System HFP feed vessels from vertical to horizontal or back for vessel replacement operations. The System HOP SBS vessel does not require tipping for import.

All of these System HSH-provided lifting devices are stored on purpose built lifting beam and hook adaptor storage racks mounted on the north wall of melter cave above the alleyway and breakdown false floor panels. For

access and recovery purposes, the storage rack and hook adapter rack (not shown) are designed to be remotely replaceable. The rack is designed to allow overhead crane access to each bail and power manipulator deployed nut runner access to an adjustment nut from the east end.

Figure 4-13 – Melter Cave Lifting Beams and Storage Rack

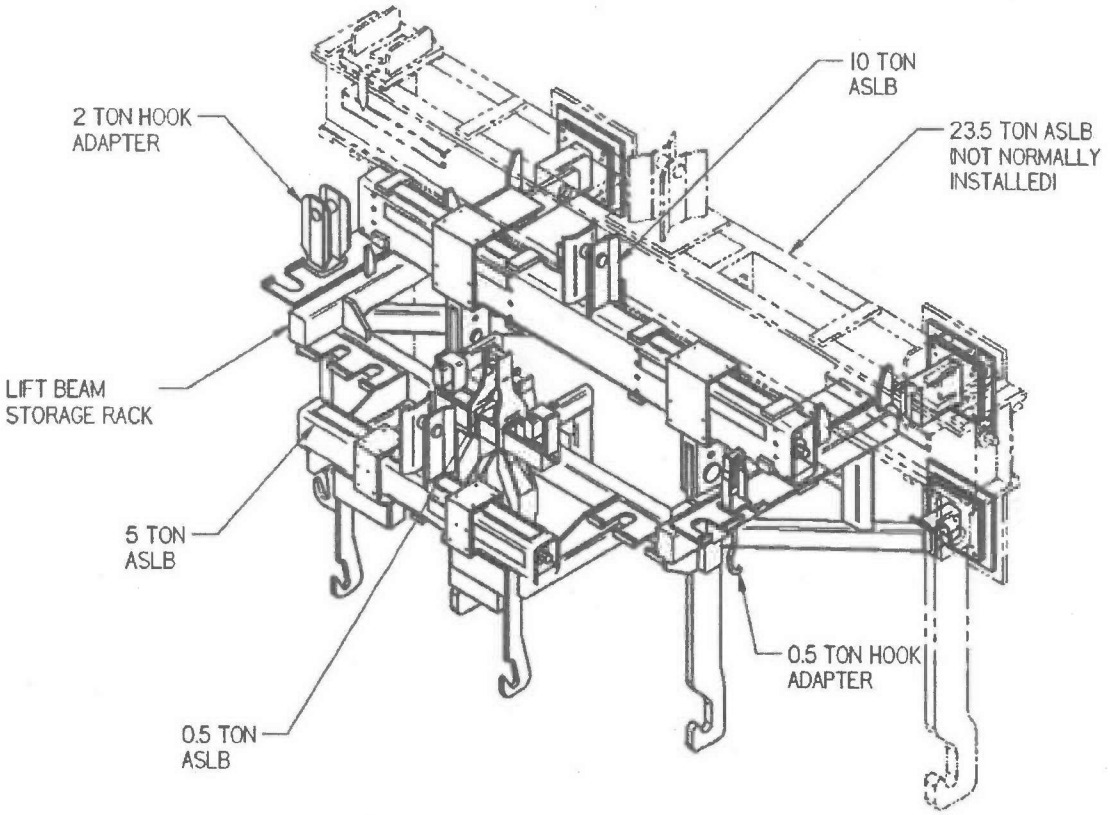

The discharge chamber lid lifting beam is designed to be lifted with the shoulder hook on the power manipulator and steadied with the power manipulator hand. This arrangement is provided to limit the swing and potential for damaging the fragile ceramic lid heater elements protruding from the underside of the lid during insertion into the discharge chamber. This beam is also equipped with a MSM operated pin to lock the beam to the shoulder hook

as the shoulder hook does not constitute a deep hook. This may be accomplished at a shield window station prior to engaging the melter discharge chamber lid.

Figure 4-14 – Discharge Chamber Lid Lifting Beam

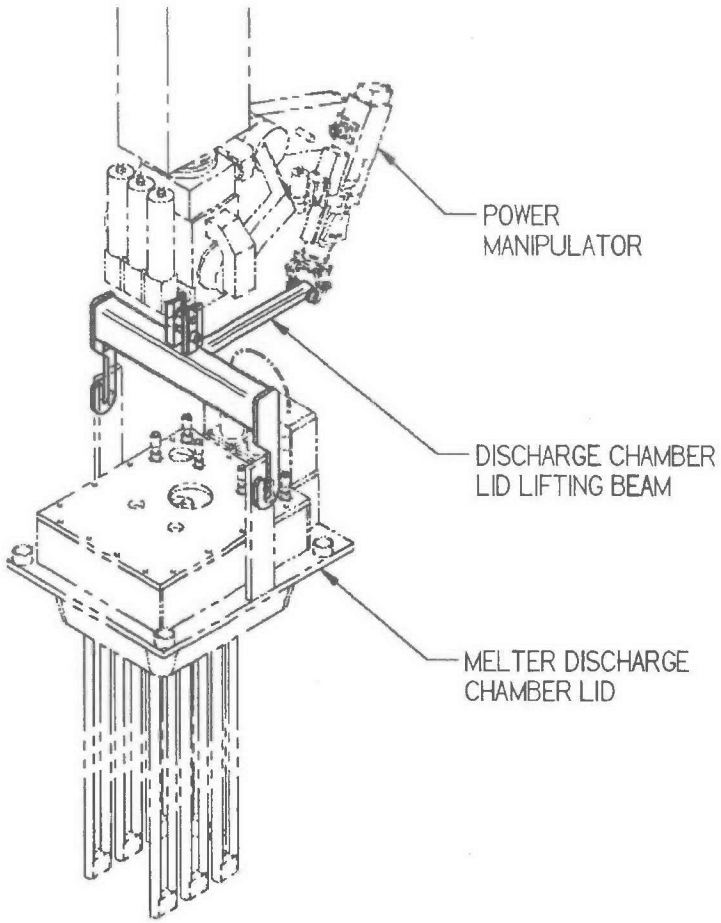

The crane decontamination area is equipped with a 4½ ton adjustable span equipment template lifting beam. This lift beam is normally used for handling the decontamination templates on the equipment stand, decontamination tank and decontamination turntable. It may also be used for handling the System HFP agitator and transfer pumps, decontamination tank spray ring, equipment stand, shuttle cart, catch pans and winch storage containers. The side plate hooks on this beam do not require adjustment with the power manipulator deployed nut runner as this beam only has four inside span spreads of, nominally, 34, 43, 50 and 54 Inches. Adjustment is made by lifting each side plate hook with the decontamination area crane and moving it laterally along the beam. Adjustment is made while the beam is on the equipment template lift beam storage rack.

The equipment template lifting beam storage rack is a remotely removable frame structure located on the north wall of the crane decontamination area above and between the parts washer and decontamination pit. The rack has spare storage capacity for the 5 ton ASLB or another future lift beam and slots for hook adapters. It is designed to allow overhead crane access to each bail and to adjust the 4½ ton equipment template lifting beam.

Figure 4-15 – Decontamination Area Lifting Beam and Storage Rack

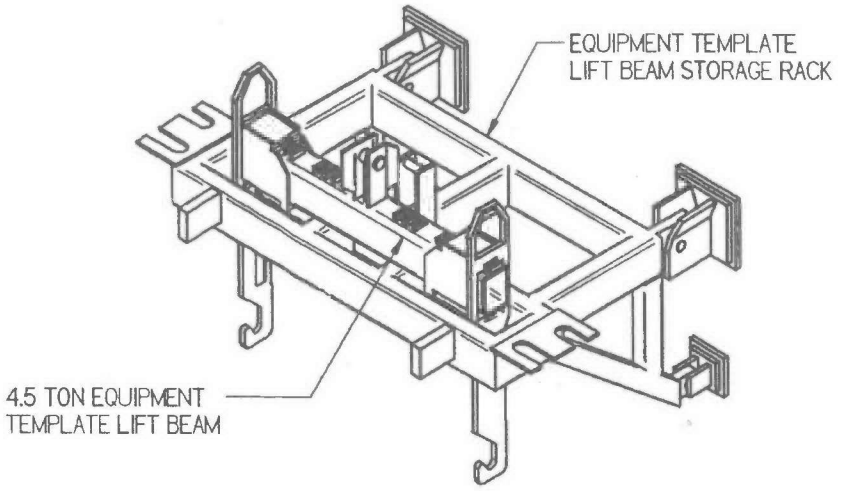

4.1.1.2 Shielding and Containment Equipment

4.1.1.2.1 Posting Port and Glovebox

Melter Cave 1, 24590-HLW-DD-HSH-TWDVC-00001, Posting Port (Safety and Seismic vary, see below)

Melter Cave 2, 24590-HLW-DD-HSH-TWDVC-00002, Posting Port (Safety and Seismic vary, see below)

Refer to: 24590-WTP-3PS-M000-T0006, *Engineering Specification for WTP Facility Posting Port*

Melter Cave 1, 24590-HLW-M0-HSH-GB-00001, Glovebox (SS, SC-II)
Melter Cave 2, 24590-HLW-M0-HSH-GB-00002, Glovebox (SS, SC-II)

Refer to: 24590-WTP-3PS-M000-T0007, *Engineering Specification for WTP Facility Posting Port Glovebox*

The posting port is a through wall transport device that enables small items, tools, equipment or swabs into and out of the melter cave. The posting port is positioned in the east wall of the melter cave, adjacent to the false floor posting panel. The posting port (located through-wall) and glovebox (located out-cave) consist of a through wall transport tray, in-cave and out-cave shield doors to provide shielding, and gamma monitors. The transport tray has a 100 lb capacity and can hold an object 15 by 19 by 4 3/8 inches in size for the 36 in. wall and 18 3/8 by 19 by 4 3/8 inches in size for the 48 in. wall.

The through wall posting port is classified as safety significant (SS), seismic class SC-III, the bolts and load path components that hold the through wall assembly in place are safety class (SC), seismic class SC-1. The safety function is that the posting port remains in place during a seismic event.

The out-cave shield door is interlocked to a gamma monitor, (located in the through-wall portion of the posting port). The gamma monitor (SS) prevents the out-cave door from opening on detection of a high radiation source.

The in-cave and out-cave shield doors are interlocked (SS safety interlock) to prevent both doors being open simultaneously. The glovebox has inner and outer air lock doors for equipment import, and a bag out port for export. A transport tray transfers equipment from the glove box to a retrieval location in cave, accessible by MSMs. All instrumentation is manually retrievable to the glove box for calibration and maintenance.

The glovebox is vented to the melter cave to ensure contamination is cascaded from an area of lower to higher contamination potential. This ventilation path is provided by a stainless steel pipe connected between the bottom of the glove box to a joggle pipe penetrating the shield wall into the melter cave. This ventilation pipe also provides a drainage path into the melter cave should the glovebox internal wet sprinkler fire suppression system activate.

The glovebox consists of two sections fabricated to form a single unit. The first section is an airlock provided for the import of items into the glovebox. The airlock doors are interlocked to prevent both doors being open at the same time, and the inner air lock door is also interlocked to the posting port out-cave shield door. The drives for both the in-cave and out-cave shield are located out-cave. The glovebox is equipped with windows, lights and glove ports for working on contaminated items. Figure 4-16 provides a partial section view to see the internal layout.

On retrieval of equipment, gamma monitors within the posting port perform detection of high radiation dose rates. If high dose rates are detected, the equipment is returned to the melter cave area for subsequent decontamination or disposal. Acceptable equipment is introduced into the glove box where it is further analyzed using a hand-held monitor for contamination.

Figure 4-16 - Posting Port and Glovebox

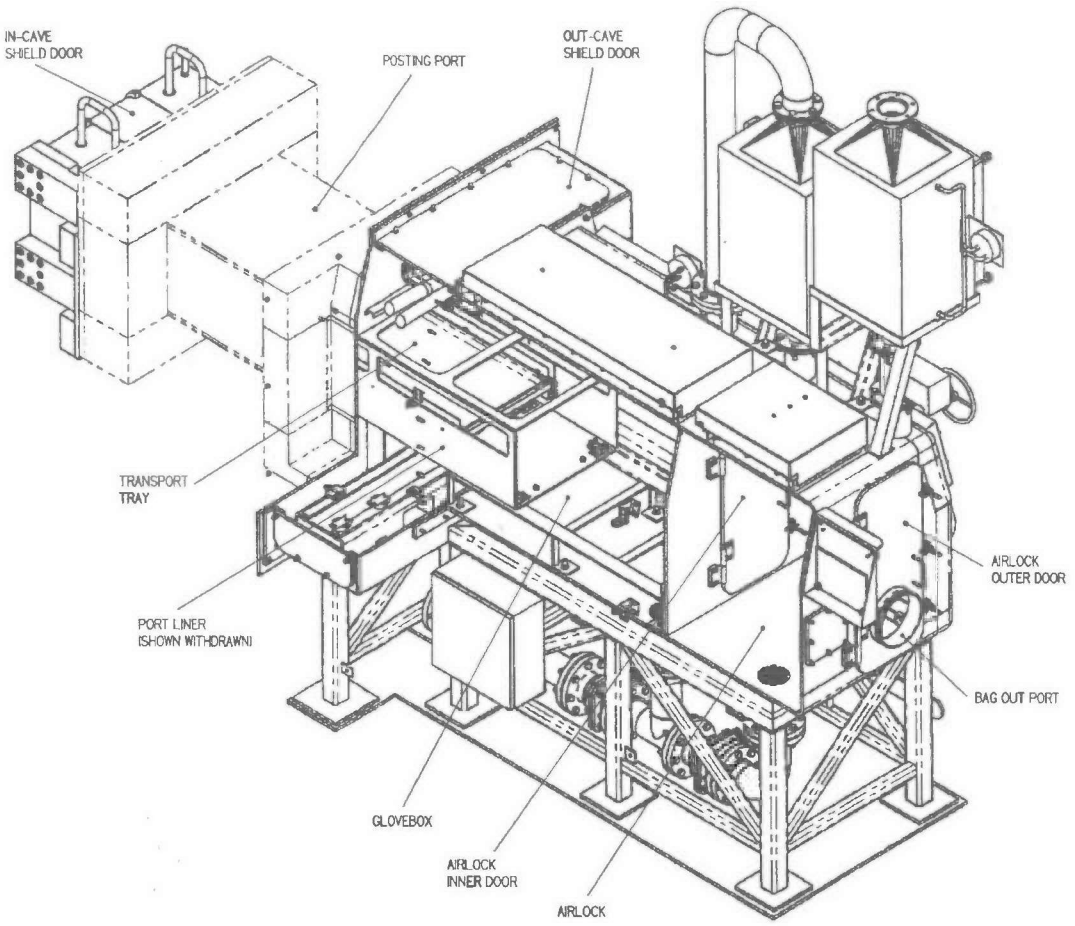

4.1.1.2.2 Crane Shield Doors and Shield Lids

Horizontal and vertical crane shield doors are located in the crane maintenance area between the CMA and CDA and in the crane decontamination area between the CDA and melter cave to provide shielding and confinement when the doors are in the closed position and a clear horizontal passage route for the melter cave main crane, power manipulator crane and hoisted equipment when the doors are open. The decontamination area shield doors are nominally 8 in. thick to provide shielding for personnel in the CDA from sources within the melter cave. The maintenance area shield doors are nominally 7 in. thick to provide shielding for personnel in the CMA from sources within the melter cave when the decontamination area doors are open or from contaminated equipment being transported through the CDA to the EDP. Shield lids are located in the CDA between the CDA and the EDP to provide shielding and confinement when the lids are in the closed position and a clear vertical passage route for equipment being hoisted into and out of the EDP from the CDA when the lids are open. The equipment decontamination pit shield lids are 3 in. thick to provide shielding for personnel in the CDA from contaminated process equipment undergoing decontamination or interim storage in the EDP. The equipment shield doors and shield lid overlap the aperture opening to minimize radiation streaming and are equipped with adjustable air gap plates to provide an engineered air gap to maintain the necessary air flow for HVAC requirements when the doors (or lid) are in the closed position.

4.1.1.2.2.1 Crane Horizontal and Vertical Shield Doors

Melter Cave 1, 24590-HLW-AD-HSH-DOOR-00005 Crane Decontamination Horizontal
Melter Cave 1, 24590-HLW-AD-HSH-DOOR-00006 Crane Decontamination Vertical
Melter Cave 1, 24590-HLW-AD-HSH-DOOR-00007 Crane Maintenance Horizontal
Melter Cave 1, 24590-HLW-AD-HSH-DOOR-00008 Crane Maintenance Vertical
Melter Cave 2, 24590-HLW-AD-HSH-DOOR-00001 Crane Decontamination Vertical
Melter Cave 2, 24590-HLW-AD-HSH-DOOR-00002 Crane Decontamination Horizontal
Melter Cave 2, 24590-HLW-AD-HSH-DOOR-00003 Crane Maintenance Vertical
Melter Cave 2, 24590-HLW-AD-HSH-DOOR-00004 Crane Maintenance Horizontal

Refer to: 24590-WTP-3PS-ADDH-T0006: *Engineering Specification for QL Crane Maintenance Shield Doors for HLW and PTF for Safety and Seismic designations*

Refer to: 24590-HLW-M0-HSH-00027001, *HLW Vitrification System HSH Design Proposal Drawing Melter Cave No. 2 Crane Decon Shield Doors Arrangement*

Each equipment shield door system works as a pair. The bottom edge of the vertical door provides guidance to the top edge of the horizontal door. This requires the vertical door to be in the lower (closed) position before opening or closing the horizontal door.

Each vertical door is raised and lowered on a pair of roller screws, driven by a single reversible electric motor located in a personnel accessible area above the CDA or CMA. The door raising and lowering operations are failsafe due to a brake assembly being attached to each roller screw. The brakes engage when power is lost to the drive system. Each vertical door is guided on a recessed wall mounted rail located in the CDA or CMA. The guide rollers and rails are adjustable and replaceable when the door is in the closed position.

Each horizontal door is supported and guided by a rail located in a recessed floor trench at the base of the door. Drive is provided by a rack and pinion drive system, driven by a single reversible electric motor located in the CMA or CDA, which are personnel accessible areas. Each horizontal shield door drive rack. The decontamination area drive motors are wash down duty rated as they may be subject to fluids and sprays in the CDA.

Figure 4-17 – Crane Vertical Shield Doors

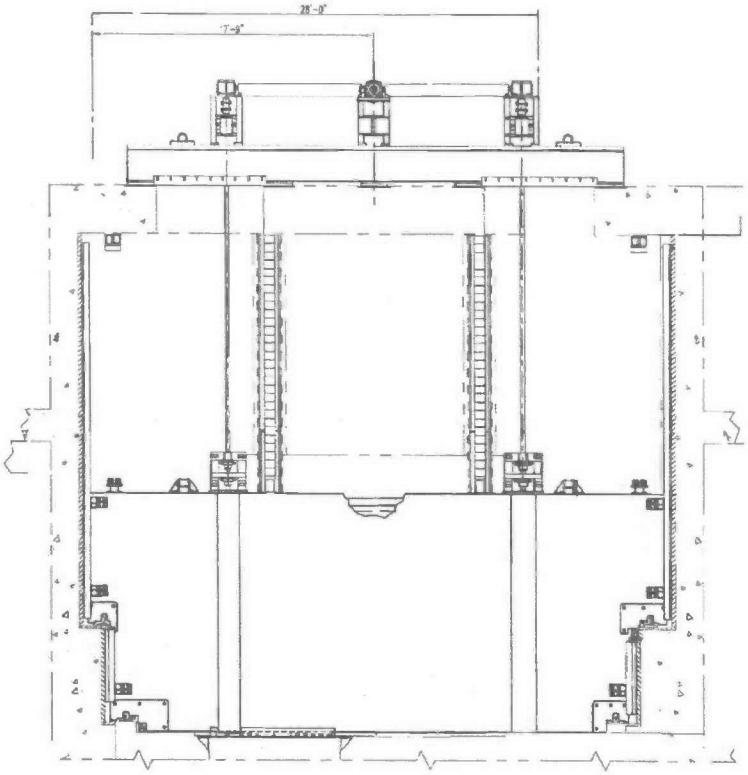

Figure 4-18 – Crane Horizontal Shield Doors

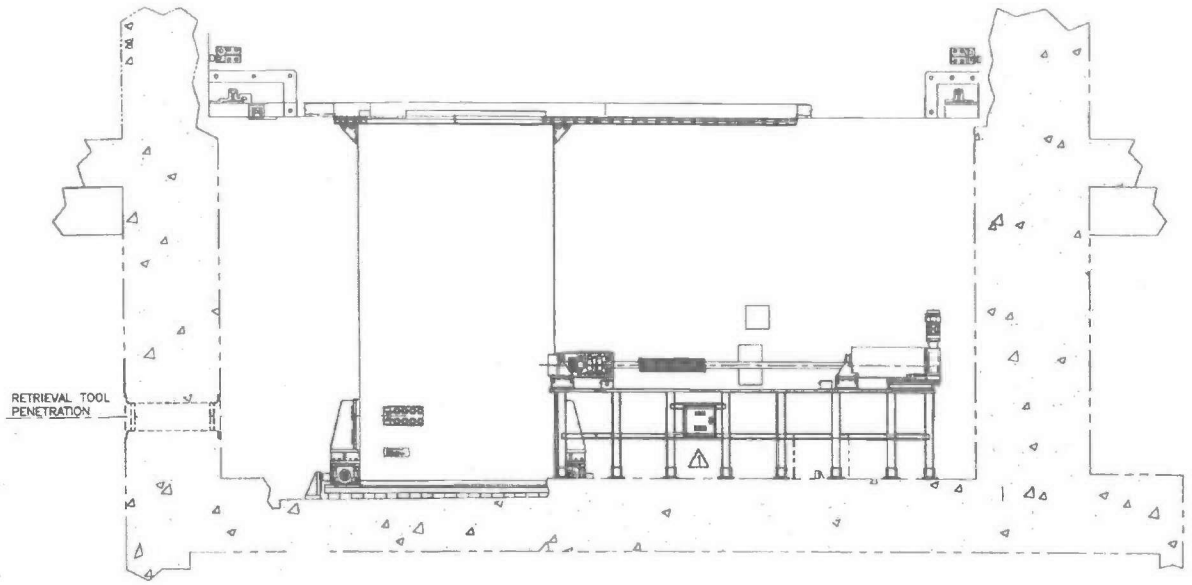

4.1.1.2.2.2 Decontamination Pit Shield Lids

Melter Cave 1, 24590-HLW-MH-HSH-MHAN-00032
Melter Cave 2, 24590-HLW-MH-HSH-MHAN-00060

Refer to: 24590-WTP-3PS-ADDC-T0002, *Engineering Specification for HLW System Transfer Hatches, Hatch Drives, Hatch Pushrod Assemblies, and Floor Penetration Liners*

Refer to: 24590-HLW-M0-HSH-00086001, *HLW Vitrification System HSH Design Proposal Drawing Melter Caves 1 and 2 Decontamination Pit Shield Lid*

The equipment decontamination pit shield lids provide shielding and containment for equipment undergoing decontamination or interim storage in the EDP. They reduce the spread of contamination into the CDA during decontamination operations and allow for personnel access into the CDA when melter cave equipment is in interim storage within the pit. The lids are equipped with open and closed proximity detectors.

The EDP shield lids are entirely stainless steel as the underside may be subject to decontamination tank fumes and lance sprays and the top side may also be exposed to decontamination fluids and sprays. The EDP shield lid has three equal size sections with small (1/8 in.) gaps between the sections to provide some thermal expansion room and avoid binding. The center section is equipped with overlapping shine plates over these gaps. The front of the lids is pivoted upwards by a hydraulic cylinder pushing downward on the lid behind the pivot point. Pressurized hydraulic fluid is supplied by the System HSH hydraulic power units. All hydraulic and instrument connections are through quick connects. The hydraulic quick connects are double shut off to minimize the migration of contamination into the hydraulic system.

The arrangement of the pivot point and cylinders allows the cylinders and all hydraulic hoses and fittings to be located above the EDP on the west wall of the CDA for maintenance access. Each cylinder rod is protected with a bellows to prevent the ingress of contamination into the hydraulic fluid. Additionally, the hydraulic circuit is

equipped with a counterbalance valve to prevent gravity over running of the lids when closing. This feature also prevents a vacuum from being formed in the cylinder and siphoning of contaminated air from the CDA into the hydraulic circuit. Each cylinder is equipped with a hose break valve to provide fail safe cylinder lock-up in the event of a hose break and each cylinder has cross over pilot operated check valves (POCV) to ensure pressure integrity in the circuit. The hose break and POCV are mounted directly on the cylinder ports. All other hydraulic controls and valves are located in an out cave cabinet in the adjacent C2 corridor. Hydraulic hoses are routed through joggle penetrations that slope downward to in cave. Each hose is equipped with a quick disconnect on each side of the joggle to allow quick replacement of the hoses and cylinders as they will require replacement or maintenance to achieve a 40 year design life. A recovery hydraulic fluid jacking point is provided in the out cave cabinet to allow the lids to be lowered to a closed position in the event of a hydraulic hose break.

Figure 4-19 – Decontamination Pit Shield Lids

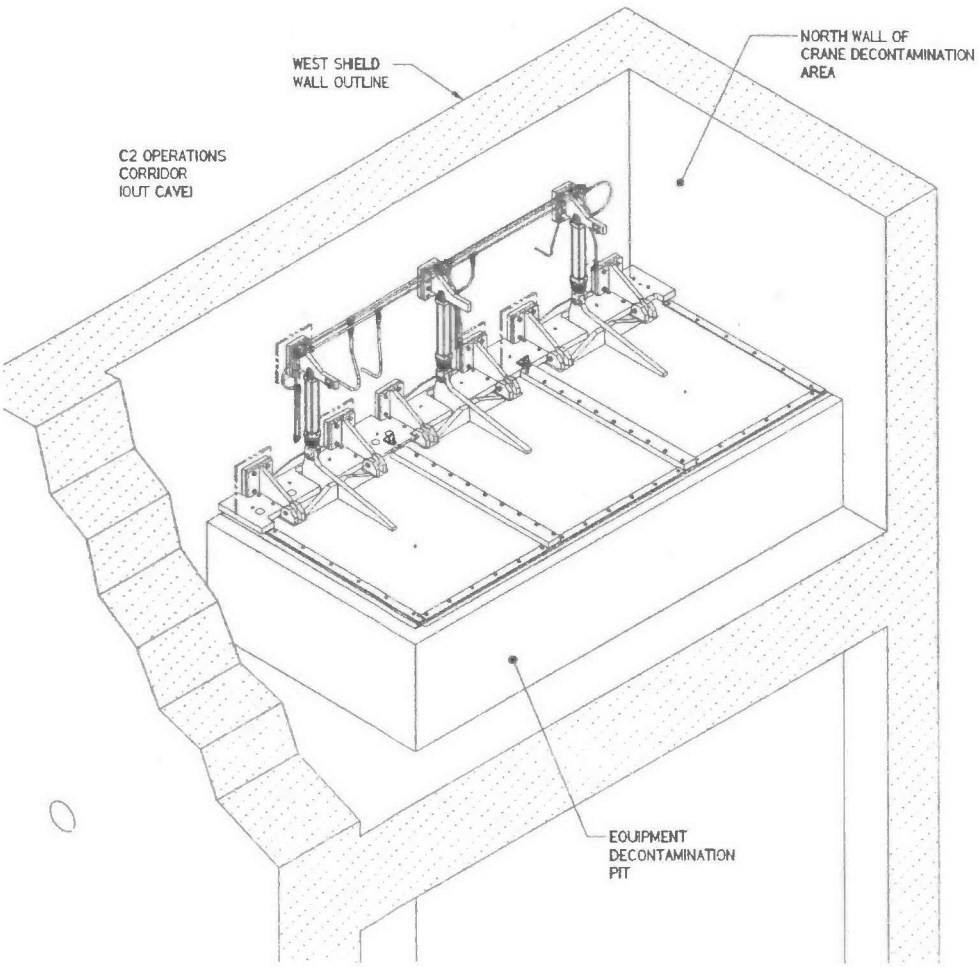

4.1.1.2.3 Shielded Personnel Access Door (SPAD), 3 inch Thick

Melter Cave 2, 24590-HLW-AD-HSH-DOOR-00016 (23 ft)
Melter Cave 1, 24590-HLW-AD-HSH-DOOR-00017 (23 ft)
Melter Cave 1, 24590-HLW-AD-HSH-DOOR-00018 (58 ft)
Melter Cave 2, 24590-HLW-AD-HSH-DOOR-00019 (58 ft)

Refer to: 24590-HLW-3PS-MX00-T0001, *Engineering Specification for QL Shielded Personnel Access Doors*

Refer to: 24590-QL-POA-ADDB-00001-09-00077, *Drawing – Door Schedule Shielded Personnel Access Doors*

Refer to: 24590-HLW-MXD-30-00025, *24590-HLW-AD-HSH-DOOR-00016 – Melter 2 Maint Shielded Personnel Access Door Data Sheet*

Refer to: 24590-HLW-MXD-30-00170, *24590-HLW-AD-HSH-DOOR-00018 – Melter 2 Maint Shielded Personnel Access Door Data Sheet*

Safety, SC-I [3.4.1.1.4, 3.4.2.1]

A 3 inch thick shielded personnel access door (SPAD) is located in the east wall of the CMA at the +23 ft elevation and in the north wall of the CMA at elevation +58 ft. The elevation +23 ft SPAD provides access to both the CMA and the CDA at the elevation +23 ft floor from the sub-change. Personnel access to the elevation +23 ft CDA is through the CMA horizontal shield door. The elevation +58 ft SPAD provides access from the sub-change room to the upper platforms in the CMA for crane maintenance and inspections. The upper platform on the east wall of the CMA also provides personnel access to the platforms in the CDA through a 12 in. SPAD. The function of the SPADs is to provide shielding and contamination control to personnel in the sub-change from the C3/R3 CMA when the horizontal and / or vertical shield doors are open, and to provide a 2 hour rated fire barrier. The SPAD is fitted with a full contact door seal to minimize air leakage.

Each SPAD is fitted with a combination latch / vacuum-breaking lever (on each side of the door) that both releases the door and provides a mechanical advantage to overcome HVAC pressure acting on the door. Although the SPAD is required to remain open when personnel are present in the CMA, the door can be opened from the inside for emergency egress should the door be inadvertently closed. The latch is fitted with a padlock that is used for locking the door in the open or closed position.

The SPAD includes a damping system that controls deceleration at end of door swing, both opening and closing. This reduces trapping hazards, and prevents overloading of the bump stops and hinges. The SPAD is shown in Figure 4-20.

4.1.1.2.4 Shielded Personnel Access Door (SPAD), 12 inch Thick

Melter Cave 1, 24590-HLW-AD-HSH-DOOR-00013 (58 ft)
Melter Cave 2, 24590-HLW-AD-HSH-DOOR-00015 (58 ft)

Refer to: 24590-HLW-3PS-MX00-T0001, *Engineering Specification for QL Shielded Personnel Access Doors*

Refer to: 24590-HLW-MXD-30-00030, *24590-HLW-AD-HSH-DOOR-00013 – Melter 1 Decon Shielded Personnel Access Door Data Sheet*

Refer to: 24590-QL-POA-ADDB-00001-09-00077, *Drawing – Door Schedule Shielded Personnel Access Doors*

Safety, SC-I [3.4.1.1.4, 3.4.2.1]

A 12 inch thick shielded personnel access door (SPAD) is pocketed into the shield wall between the CMA and CDA at elevation +58 ft. This SPAD can only be used when the maintenance area vertical shield door is in the closed position because the raised vertical door panel physically covers the opening. To access this SPAD, a hand winch operated drawbridge is required to be lowered from the CMA east side elevation +58 ft platform to cross the gap where vertical shield door travels. The 12 inch SPAD provides access to the platforms in the CDA for manual crane decontamination and crane maintenance and inspections. The function of the SPAD is to provide shielding to personnel in the CMA from the C3/C5/R3/R5 CDA. This SPAD does not need to provide a 2 hour rated fire barrier as the CMA and CDA are in the same fire boundary. The SPAD is fitted with a full contact door seal to minimize air leakage.

The SPAD is fitted with a combination latch / vacuum-breaking lever (on each side of the door) that both releases the door and provides mechanical advantage to overcome HVAC pressure acting on the door. Although the SPAD is required to remain open when personnel are present in the CDA, the door can be opened from the inside for emergency egress should the door be inadvertently closed. The latch is fitted with a padlock that is used for locking the door in the open or closed position.

The SPAD includes a damping system that controls deceleration at end of door swing, both opening and closing. This reduces trapping hazards, and prevents overloading of the bump stops and hinges. See Figure 4-20 for a typical door view.

Figure 4-20 – Shielded Personnel Access Door (SPAD)

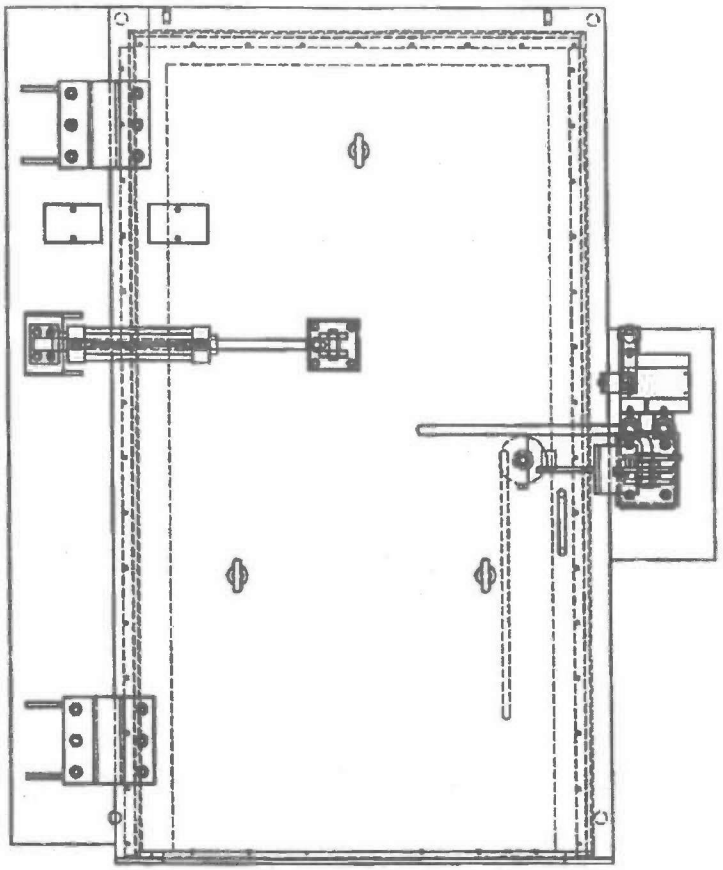

4.1.1.3 Through Wall / Floor Equipment

4.1.1.3.1 Hydraulic Power Manipulators

Melter Cave 1, 24590-HLW-MJ-HSH-MANIP-00002, (Breakdown Table HPM)
Melter Cave 1, 24590-HLW-MJ-HSH-MANIP-00004, (Sorting Table HPM)
Melter Cave 2, 24590-HLW-MJ-HSH-MANIP-00016, (Breakdown Table HPM)
Melter Cave 2, 24590-HLW-MJ-HSH-MANIP-00017, (Sorting Table HPM)

Refer to: 24590-HLW-3PS-M000-T0002, *Engineering Specification for Through Wall Power Manipulator*

Refer to: 24590-HLW-M0D-HSH-00138, *24590-HLW-MJ-HSH-MANIP-00002 and 24590-HLW-MJ-HSH-MANIP-00016 – Breakdown Table Power Manipulators Data Sheet*

Refer to: 24590-HLW-M0D-HSH-00139, *24590-HLW-MJ-HSH-MANIP-00004 and 24590-HLW-MJ-HSH-MANIP-00017 – Sorting Table Power Manipulator Data Sheet*

The melter cave is equipped with two through wall hydraulic power manipulators (HPMs). One is located at the sorting table along the east wall at the waste sorting station and the other is located at the breakdown table along

the west wall. As these HPMs fit in the standard 48 in. long 10-1/2 in. liners, they may be relocated as required. The HPM at the sorting table is used to load heavier size reduced melter consumable components into solid waste baskets, lid the baskets, operate the waste basket loading frame and assist in general maintenance activities. The HPM at the breakdown is used to hold equipment and operate remote tools during size reduction, to load heavier components into solid waste baskets and to reposition the breakdown area hoist as required.

The HPM consists of the out cave command center, hydraulic interface cabinet and hydraulic manifold station, a through wall shielding shoulder rotate mechanism and the in cave slave arm. The HPM through wall shoulder rotate mechanism is SDS, SC-II, having a safety function to remain in place during and after a seismic DBE so as not to create a 6 in. or greater diameter (equivalent) opening in the C5 boundary. The in-cave arm, control system and handling equipment provided with the HPM are non-safety.

The HPM has an overall reach of approximately 12 ft from the shoulder rotate joint and a rated load capacity in any arm configuration of 150 lbs. The HPM is a true tele-robotic manipulator with seven degrees of freedom and full position feedback. It may be operated in any one of three modes; global, tool or resolved joint motion. The kinematic algorithm contains collision avoidance interlock routines to allow the global or tool mode to automatically avoid obstacles or remain within a defined boundary. It also contains teach and repeat macros where routine predefined operations may be recorded and replayed under operator supervision. Each HPM has a remotely operable tool power socket to allow the in-cave tools to be plugged in and run through the command center. A removable hypalon boot covers the slave arm portions to minimize contamination of the arm and its internal working components.

Figure 4-21 – Hydraulic Power Manipulator (HPM)

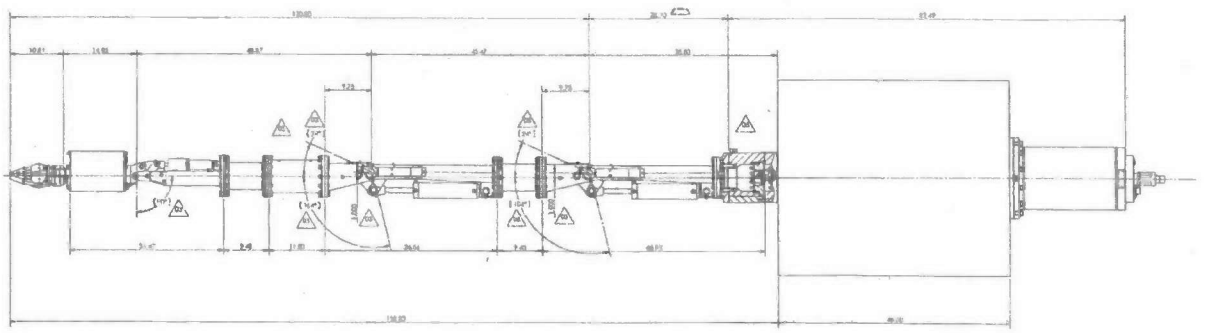

The HPM is powered from the System HSH hydraulic power units. The HPM hydraulic interface cabinet is a portable wheeled cabinet that contains the primary pressure enable switch, pressure reducing and relieving valve, in-line filter and accumulator. It is connected to the System HSH hydraulic network pressure and tank lines. The hydraulic manifold contains the servo-proportional hydraulic valves that control the arm motions. It is mounted on the cold side of the 10-1/2 in. liner and connects the hydraulic interface cabinet to the through wall shoulder section of the manipulator. The command center is a portable wheeled cabinet that contains the hardware, software and firmware that translates operator commands to arm motions. Control cables from the command center to the hydraulic interface cabinet and to the hydraulic manifold provide the signals necessary for command and control.

4.1.1.3.2 Master Slave Manipulators

Melter Cave 1, 24590-HLW-MJ-HSH-MANIP-00005, 00006, 00007, 00008, 00009, 00011 (48 in.)
Melter Cave 1, 24590-HLW-MJ-HSH-MANIP-00012, 00013, 00014, 00015 (32 in.)
Melter Cave 1, 24590-HLW-MH-HSH-MHAN-00007 (MSM Decontamination Stand, SC-V)

Melter Cave 2, 24590-HLW-MJ-HSH-MANIP-00018, 00019, 00020, 00021, 00022, 00024 (48 in.)
Melter Cave 2, 24590-HLW-MJ-HSH-MANIP-00025, 00026, 00027, 00028 (32 in.)
Melter Cave 2, 24590-HLW-MH-HSH-MHAN-00053 (MSM Decontamination Stand, SC-V)

Refer to: 24590-WTP-3PS-M000-T0012, *Engineering Specification for Master Slave Manipulators for PTF, HLW, LAW and LAB*

Refer to: 24590-WTP-M0-10-00014, *WTP Vitrification System Design Proposal Drawing MSM Manipulation Dimensions*

Master slave manipulators (MSMs) provide remote manipulation of tools and equipment at cave face shield window stations. The melter cave and equipment decontamination pit are equipped with a combined total of ten MSMs. Spare standard 10-1/2 in. liners are provided for an additional five more MSMs. Five 48 in. MSMs are located through the east wall of the melter cave adjacent to the sorting, posting and tool storage areas and one 48 in. MSM located through the west wall of the melter cave adjacent to the breakdown area. The EDP is equipped with four 32 in. MSMs through the west wall. The MSMs along the east wall of the melter cave are used for waste sorting and segregation, tool import, physically light maintenance tasks, remote tool operation, tool reconfiguration and tool power connection to the power sockets on the in cave cranes and manipulators. The MSMs within the EDP are used for handling CO_2 and H_2O spray decontamination lances, swabbing and posting (future) operations, decontamination turntable rotation and maintenance of equipment within EDP. The MSM at the breakdown area is used for size reduction activities, plasma torch operation, central vacuum system hose manipulation and manipulation and maintenance of size reduction equipment.

The MSM comprises a master arm, (located out-cave in the operations area), through wall shielding seal tube, and an in-cave slave arm. The index motors, microprocessor and drive module are located out-cave on the master arm assembly for maintenance access. The MSM through wall mechanisms are SC, SC-I, having a safety function to remain in place during and after a seismic DBE so as not to create a 6 in. or greater diameter (equivalent) opening in the C5 boundary.

The slave arm reacts to motion inputs from the master via personnel manipulation. The slave arm has a maximum load capacity of 50 pounds. Each MSM has a set of removable fingers which are used to hold and manipulate in-cave items. A removable polyurethane boot covers the slave arm to minimize contamination of the arm and its internal working components. See Figure 4-22.

The slave arms are remotely removable via the overhead power manipulator crane. A dedicated storage and MSM decontamination stand is located in the CDA. The MSM decontamination stand interfaces with a MSM slave arm. It is comprised of a tube steel frame mounted on a base plate. The frame has the remote interfaces for a slave arm and a fold over style lifting bail for transport of the loaded stand. The base plate has rectangular cut outs similar to the decontamination templates, so that the loaded stand may be positioned in the decontamination tank or on the decontamination turntable for high pressure or lance spray decontamination of the slave arm.

Figure 4-22 – Master Slave Manipulator (MSM)

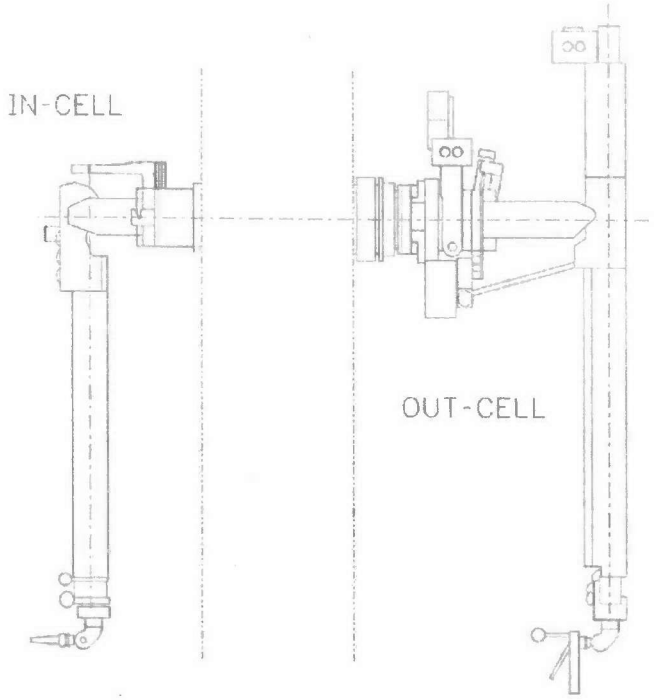

"

4.1.1.3.3 Through Wall Shield Plugs

Melter Cave 1, 24590-WTP-DD-30-PLUG-00117, 00118, 00119, 00120, 00121, 00137
Melter Cave 2, 24590-WTP-DD-30-PLUG-00130, 00131, 00133, 00135, 00136, 00138

Refer to: 24590-WTP-3PS-MX00-T0003, *Engineering Specification for QL Through-wall Devices.*

Refer to: 24590-HLW-MX-M40T-00001001, *Detail of 10 ½ IN Bore – 48" Wall Plug.*

Refer to: 24590-HLW-MX-M40T-00003001, *Detail of 10 ½ IN Bore – 32 In Wall Plug.*

Safety, SC-I

The through wall shield plugs provide contamination control and radiation shielding in the spare 10-1/2 in. standard liners in both the 32 in. and 48 in. lengths. They provide radiation attenuation equivalent to the concrete shield wall to maintain radiation dose rates in the adjacent corridors ALARA. The shield plugs are SC, SC-I, having a safety function to remain in place during and after a seismic DBE so as not to create a 6 in. or greater diameter (equivalent) opening in the C5 boundary. They are replaceable with the MSM removal / installation cart.

4.1.1.3.4 Through Wall Decontamination Joggle Shield Plugs

Melter Cave 1, 24590-WTP-DD-30-PLUG-00158 through 00166, 00180, 00227
Melter Cave 2, 24590-WTP-DD-30-PLUG-00181 through 00190, 00228

Refer to: 24590-WTP-3PS-MX00-T0003, *Engineering Specification for QL Through-wall Devices*

Refer to: 24590-WTP-M0-M10T-00016, *WTP Vitrification System All Design Proposal Drawing 10 ½ In Dia Service Joggle Pipes*

Safety, SC-I

The decontamination joggle shield plugs provide contamination control and radiation shielding in the 10-1/2 in. standard liners in both the 32 in. and 48 in. lengths and a shielded penetration for conveying decontamination media. They provide radiation attenuation equivalent to the concrete shield wall to maintain radiation dose rates in the adjacent corridors ALARA. They have two internal joggle pipes equipped with remote connections for in-cave use. The pipes provide a process flow path for plant wash, steam, pressurized water and / or carbon dioxide to the in-cave manual and remote spray lances, the crane decontamination system and the power manipulator crane mast wash down system. One pipe conveys demineralized water, steam, or other chemical media from the mobile out-cave pressure washing supply system. The other line conveys CO_2 pellets from the out-cave mobile CO_2 blast unit. The decontamination joggle shield plugs are SC, SC-I, having a safety function to remain in place during and after a seismic DBE so as not to create a 6 in. or greater diameter (equivalent) opening in the C5 boundary. The plugs are replaceable with the MSM removal / installation cart.

The 32 in. and 48 in. long decontamination joggle shield plugs shown on vendor drawings 24590-QL-POA-EMM3-00001-14-00012, 00013, 00015 and 00016 are not qualified or rated (per ASME B31.3) for operation above a fluid temperature of 100°F and 125 psig pressure.

4.1.1.3.5 Horizontal Shield Door Recovery Plugs

Melter Cave 1, 24590-HLW-DD-HSH-PLUG-00003, 00004
Melter Cave 2, 24590-HLW-DD-HSH-PLUG-00010, 00011

Refer to: 24590-WTP-3PS-MX00-T0003, *Engineering Specification for QL Through-wall Devices*

Refer to: 24590-WTP-M0-10-00005001, *WTP Vitrification System Design Proposal Drawing Horizontal Shield Door Recovery Plug Assembly*

Safety, SC-I

The horizontal shield door recovery plugs provide radiation attenuation equivalent to the concrete shield wall to maintain radiation dose rates in the adjacent corridors ALARA. They provide an interface between the horizontal shield doors and the out cave located shield door recovery mechanism. The horizontal shield door recovery plugs are SC, SC-I, having a safety function to remain in place during and after a seismic DBE so as not to create a 6 in. or greater diameter (equivalent) opening in the C5 boundary. The shield plugs fit into the standard 10-1/2 in. liners and are provided in a 48 in. length.

Figure 4-23 – Horizontal Shield Door Recovery Plug

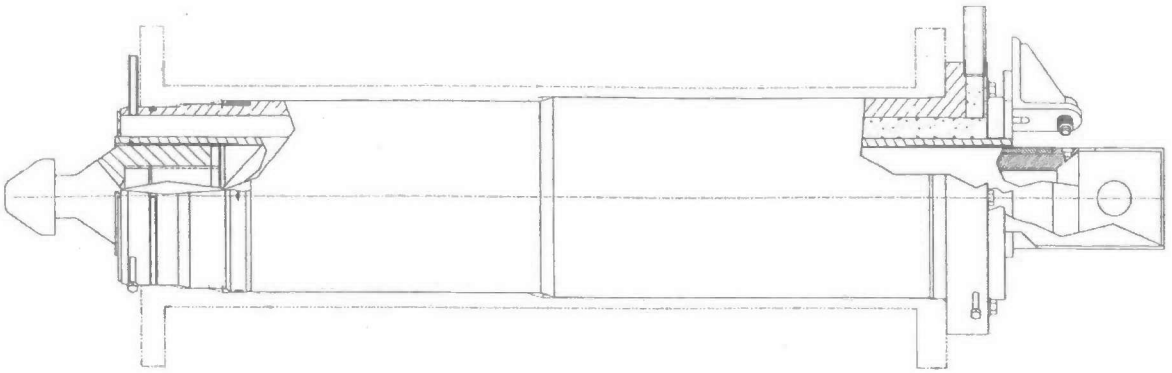

4.1.1.3.6 Plasma Torch Pass Through Port

Melter Cave 1, 24590-HLW-MH-HSH-RCVY-00012
Melter Cave 2, 24590-HLW-MH-HSH-RCVY-00020

Refer to: 24590-WTP-3PS-MX00-T0003, *Engineering Specification for QL Through-wall Devices*

Refer to: 24590-HLW-M0-HSH-00093001, *HLW Vitrification System HSH Design Proposal Drawing Plasma Torch Pass-Thru Port*

SDC, SC-I

The plasma torch pass through port is a nominal 6 in. diameter joggled pipe. Shielding is maintained though shine blocks behind the straight runs of the joggle pipe. Contamination control and cascade ventilation is maintained through a slit gasket surrounding the torch cable assembly and a small door entering the pass through port. The pass through port allows the plasma torch head and cables to be routed from the out-cave control unit to the breakdown table. The pass through ports are SDC, SC-I, having a safety function to remain in place during and after a seismic DBE so as not to create a 6 in. or greater diameter (equivalent) opening in the C5 boundary. Although the joggle pipe exceeds this diamter, the out-cave small access door has an opening less than this. The access door is briefly opened when a replacement torch head needs to be installed. At all other times, it may be locked shut.

Figure 4-24 – Plasma Torch Pass Through Port

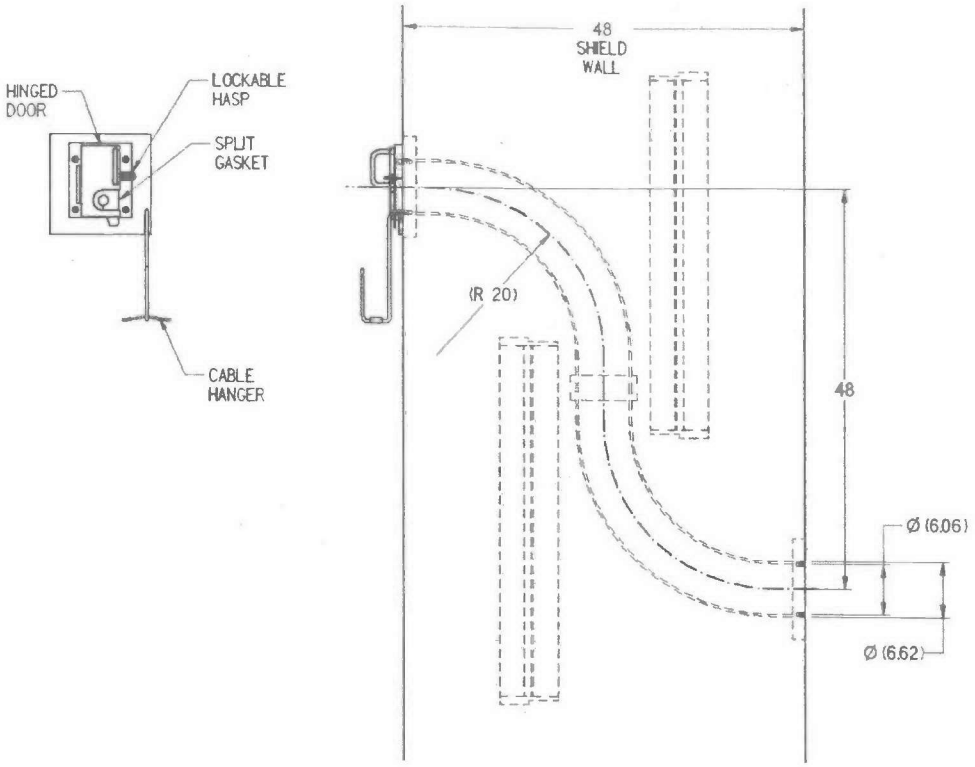

4.1.1.3.7 Waste Transfer Port

Melter Cave 1, 24590-HLW-MH-HSH-CHT-00001
Melter Cave 2, 24590-HLW-MH-HSH-CHT-00002

Non-Safety, SC-III

Refer to: 24590-WTP-3PS-MQL0-T0002, *Engineering Specification for Mechanical Handling Custom Designed and Fabricated Equipment*

Refer to: 24590-HLW-M0-HSH-00047001, *HLW Vitrification System HSH Design Proposal Drawing Melter Cave Waste Transfer Port*

The waste transfer port allows solid waste baskets to be remotely transferred from the melter cave to System RWH and back. It also allows unrestricted airflow from the drum transfer tunnel to the melter cave to maintain C5 cascading ventilation from the drum transfer tunnel.

The waste transfer port is simply a 24 in. outside diameter pipe with a remotely removable lid on top and screened openings along the top portion of the pipe. The lid and screens prevent items from being dropped into the drum transfer tunnel and the screened areas at the top maintain an airflow path from the drum transfer tunnel when the

lid is on. The internal pipe bore has centering features at the bottom to align and guide the solid waste basket into the drum.

The 1 ton hook adapter must be used to export or import solid waste baskets through the transfer port from a pre-staged 55 gallon drum atop the System RWH drum transfer bogie.

Figure 4-25 – Waste Transfer Port

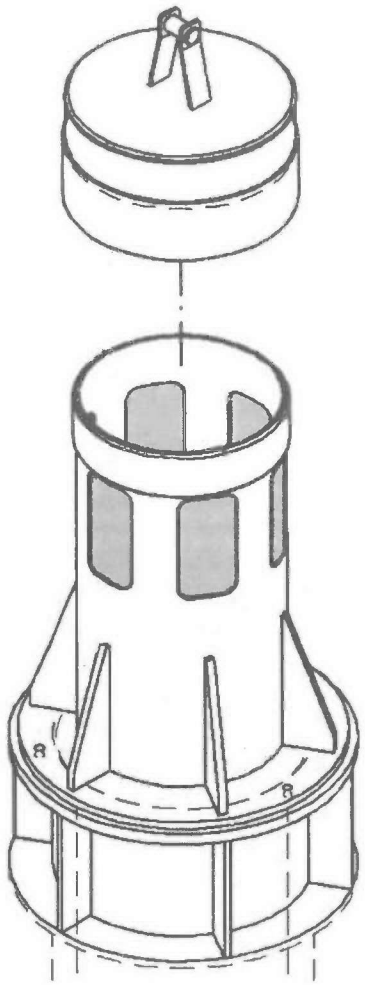

4.1.1.3.8 Pour Tunnel Cover Plates

Melter Cave 1, 24590-HLW-MH-HSH-MHAN-00028 (Small Cover Plates)
Melter Cave 1, 24590-HLW-MH-HSH-MHAN-00029 (Large Cover Plates)
Melter Cave 2, 24590-HLW-MH-HSH-MHAN-00075 (Small Cover Plates)
Melter Cave 2, 24590-HLW-MH-HSH-MHAN-00076 (Large Cover Plates)
Non-Safety, SC-IV
Refer to: 24590-WTP-3PS-MQL0-T0002, *Engineering Specification for Mechanical Handling Custom Designed and Fabricated Equipment*

Refer to: 24590-HLW-M0-HSH-00049001, *HLW Vitrification System HSH Design Proposal Drawing Canister Pour Tunnel Cover Plate*

Pour tunnel cover plates form an interface between the melter cave and the canister handling system pour tunnel. Their duties are to:

- Prevent dropped items from entering the canister
- Allow access for replacement of the melter pour spout
- Allow access for recovery of a canister from the canister pour bogie
- Allow access for retrieval of a solid waste basket from the canister pour bogie
- Allows C5 cascade ventilation to be maintained between the pour tunnel and the melter cave (a minimum opening of 5.3 ft^2 required)

The pour tunnel cover plates are insulated, sandwich type plates that form an interface with the canister handling pour tunnel (System HPH). The small cover plates are supported along the inner edge by a beam running along the north-south axis of the pour tunnel and supported on the outside by a lip on the liner of the pour tunnel. The large cover plate is similarly supported. The small cover plates are equipped with lifting bails and the large cover plate with lifting trunnions that interface with a lifting beam. The small cover plates require removal to: replace the melter pour spout, retrieve the pour spout drip pan, recover a canister or retrieve a solid waste basket. The large cover plate is only accessible for removal during melter change out. The cover plates are sloped outboard to drain fluids into the melter rail trenches instead of the pour tunnel.

Figure 4-26 – Pour Tunnel Cover Plates

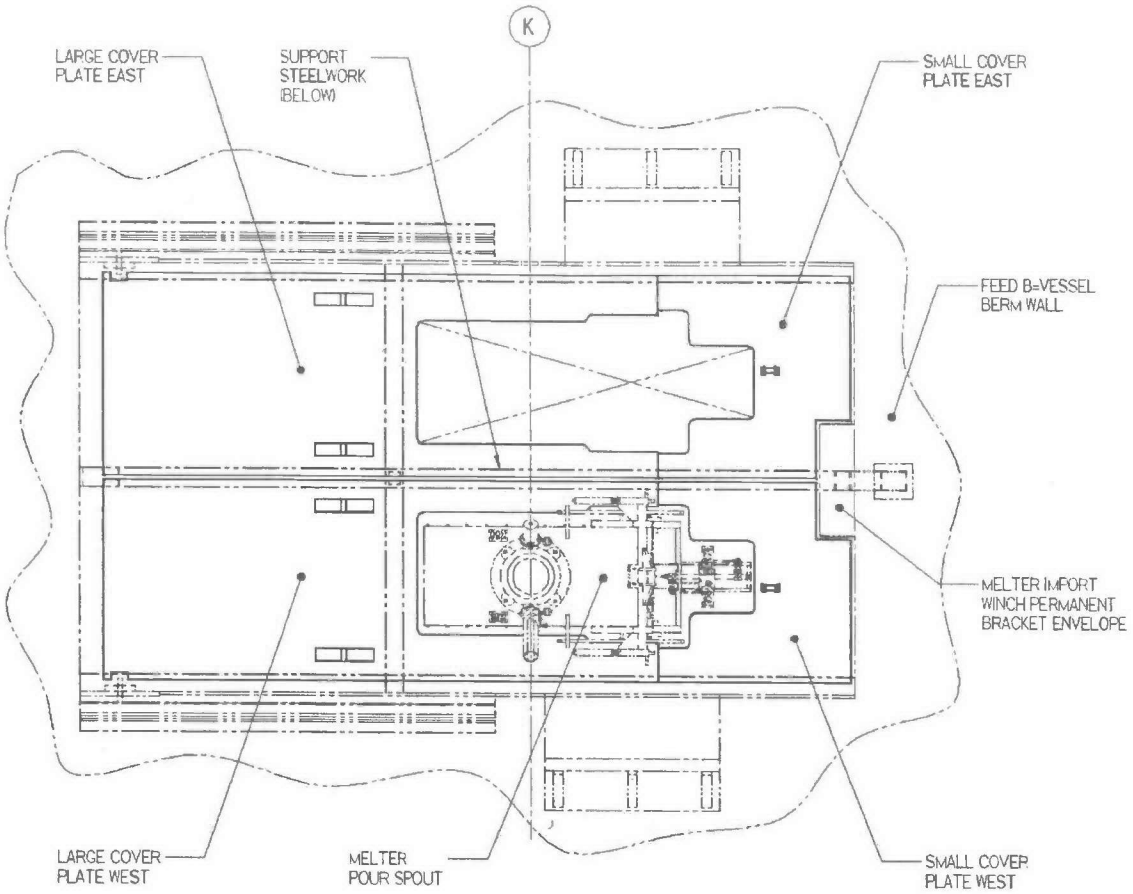

4.1.1.4 Melter Cave Material Handling Equipment

4.1.1.4.1 False Floor and Related Equipment

The melter cave is equipped with an elevated storage and work platform collectively referred to as the false floor. The top of the false floor is at elevation +16 ft 2 in. to allow viewing and access to equipment on the false floor from the east wall shield windows and manipulators. The underside of the false floor is at the same elevation as the System HMH C5 shield door header (elevation +15 ft 6 in.) to allow a new or spent melter to traverse underneath the floor panels. The false floor provides interim storage space for melter consumables, process equipment and process jumpers. During melter change out operations, the interim storage spaces must be emptied and some shuffling and pre-staging of equipment and panels is required.

The false floor is generally comprised of a structural support frame and the cover panels. The structural frame and cover panels support additional material handling equipment. All components of the false floor panel and structural frame exposed to the cave environment are of stainless steel construction to provide a 40 year service life in the melter cave environment and to allow for decontamination.

Refer to: 24590-WTP-3PS-MQL0-T0002, *Engineering Specification for Mechanical Handling Custom Designed and Fabricated Equipment*

4.1.1.4.2 Floor Panels and Templates

Melter Cave 1, 24590-HLW-MH-HSH-MHAN-00020 (False Floor Panels Alleyway)
Melter Cave 1, 24590-HLW-MH-HSH-MHAN-00043 (False Floor Panels Alleyway Consumable)
Melter Cave 1, 24590-HLW-MH-HSH-MHAN-00122 (False Floor Panels Alleyway Storage)
Melter Cave 1, 24590-HLW-MH-HSH-MHAN-00045 (False Floor Panels Sorting)
Melter Cave 1, 24590-HLW-MH-HSH-MHAN-00118 (False Floor Panels Posting)
Melter Cave 1, 24590-HLW-MH-HSH-MHAN-00027 (False Floor Panels Breakdown)
Melter Cave 1, 24590-HLW-MH-HSH-MHAN-00124 (Storage Panel Transfer Pump Template)
Melter Cave 1, 24590-HLW-MH-HSH-MHAN-00126 (Storage Panel ADS Pump Template)
Melter Cave 1, 24590-HLW-MJ-HSH-LIFT-00023 (Floor Panel Tip / Lift Beam, SC-V)
Melter Cave 2, 24590-HLW-MH-HSH-MHAN-00070 (False Floor Panels Alleyway)
Melter Cave 2, 24590-HLW-MH-HSH-MHAN-00085 (False Floor Panels Alleyway Consumable)
Melter Cave 2, 24590-HLW-MH-HSH-MHAN-00123 (False Floor Panels Alleyway Storage)
Melter Cave 2, 24590-HLW-MH-HSH-MHAN-00087 (False Floor Panels Sorting)
Melter Cave 2, 24590-HLW-MH-HSH-MHAN-00119 (False Floor Panels Posting)
Melter Cave 2, 24590-HLW-MH-HSH-MHAN-00074 (False Floor Panels Breakdown)
Melter Cave 2, 24590-HLW-MH-HSH-MHAN-00125 (Storage Panel Transfer Pump Template)
Melter Cave 2, 24590-HLW-MH-HSH-MHAN-00127 (Storage Panel ADS Pump Template)
Melter Cave 2, 24590-HLW-MJ-HSH-LIFT-00024 (Floor Panel Tip / Lift Beam, SC-V)

Non-Safety, SC-III (unless otherwise noted above)

Refer to: 24590-HLW-M0X-M40T-00009, *Mechanical Handling Equipment List for HLW Systems HDH, HPH, HRH, and HSH*

Refer to: 24590-HLW-M0-HSH-00046001, *HLW Vitrification System HSH Design Proposal Drawing False Floor Panels Arrangement*

The false floor panels are a sandwich type panel with internal structural members and an external stainless steel covering. They have slots and lifting trunnions recessed below the top surface for handling with a lifting beam. The panels have a working (live load) limit of 50 lbs/ft^2 and an 11 gauge skin on the remaining exposed surfaces. The false floor panels are further subdivided by distinct areas within the melter cave with each area corresponding to a geographical area in the cave. The center alleyway panels are located overtop of the melter transport path. There are six alleyway panels, two of which have unique features and accessories for interim storage of melter consumables and melter cave equipment. The breakdown area panels are on top of the breakdown area along the west wall. There are four identical breakdown panels. The sorting panels are located along the east wall in front of the two northern shield windows. There are three identical sorting panels. The single posting panel is located in front of the through wall posting port.

The two unique alleyway panels are the storage panel and the consumables panel. The storage panel has a circular cutout at each end to allow interim storage of a System HFP agitator, transfer pump or air displacement slurry (ADS) pump or the HPM slave arm and transport cradle. The storage panel is further equipped with a transfer pump adapter template and an ADS pump adapter template. The ADS pump adapter template nests into the transfer pump adapter template, which in turn, nests into the circular cutout for the agitator. The pump adapter templates are equipped with lifting bails for remote handling; however, these bails are only rated for lifting the pump templates, either singularly or nested. They are not designed for lifting the pumps. The consumable panel

has three identically sized rectangular openings and one circular opening. The rectangular openings are used to hold the bubbler template, miscellaneous template and discharge heater template. The circular opening holds the consumable bucket. Each panel is interchangeable with any other identically sized panel however the alleyway storage panel and consumables panel should not be positioned at the south end of the structural framework as long items stored in either of these two panels would interfere with the melter bus system below.

Each panel is equipped with remote hold down bolts to retain the panels in place on the structural frame. Each panel is also equipped with a bolting and alignment block at each outboard corner to allow remotely aligning, setting and bolting various pieces equipment onto the panels. A dedicated panel tipping / lifting beam is provided for the alleyway and breakdown panels as they are too long to fit into the decontamination pit in their normal horizontal orientation. The panel tipping / lifting beam is remotely bolted to the end of a panel and used to upend and transport the panel with the main 25 ton overhead crane. The panels must be set on a flat surface to allow upending as the guide dowels on the structural frame would bind within the panel receivers.

Figure 4-27 – False Floor Panels Arrangement

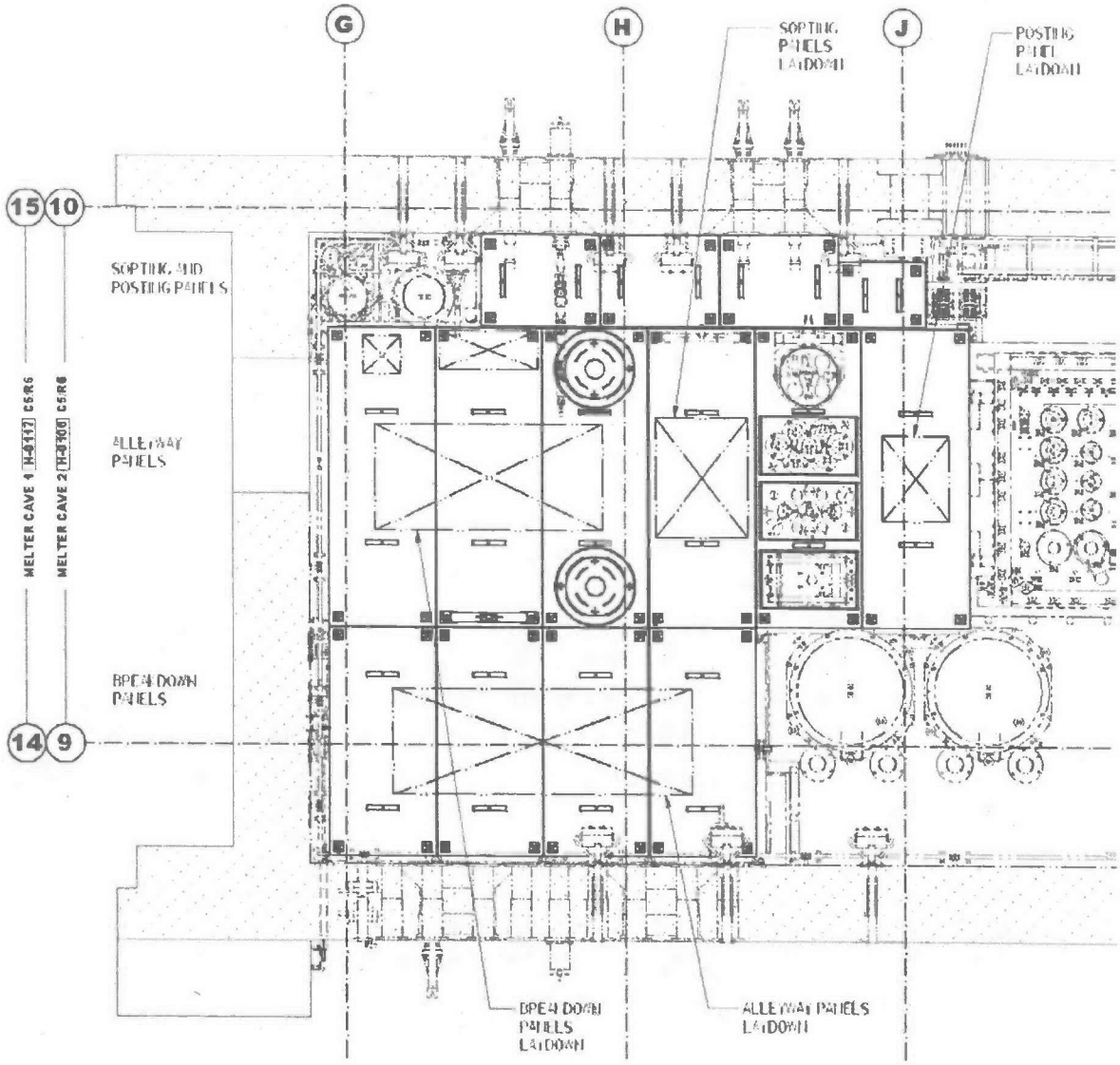

4.1.1.4.3 Tool Storage Table

Melter Cave 1, 24590-HLW-MH-HSH-MHAN-00099
Melter Cave 2, 24590-HLW-MH-HSH-MHAN-00100

Non-Safety, SC-III

Refer to: 24590-HLW-M0-HSH-00046001, *HLW Vitrification System HSH Design Proposal Drawing False Floor Panels Arrangement*

In addition to the general work and storage area provided by the false floor panels, a dedicated tool storage table is provided along the east wall in line with the melter pour spouts. The tool storage table is situated below a shield window and MSM pair to allow remote in-cave tool reconfiguration and tool connection to the tool power outlets on the main crane and power manipulator crane. The tool storage table is also equipped with remote alignment and bolting provisions into the table top. The tool storage table is hung from permanent wall brackets to allow remote removal and replacement. Removal is required to allow overhead power manipulator access to the through wall penetrations for the melter discharge heater power cables below the table. Overhead power manipulator access is required to the in-cave side of the joggles as these are pull back jumpers.

Figure 4-28 –Tool Storage Table

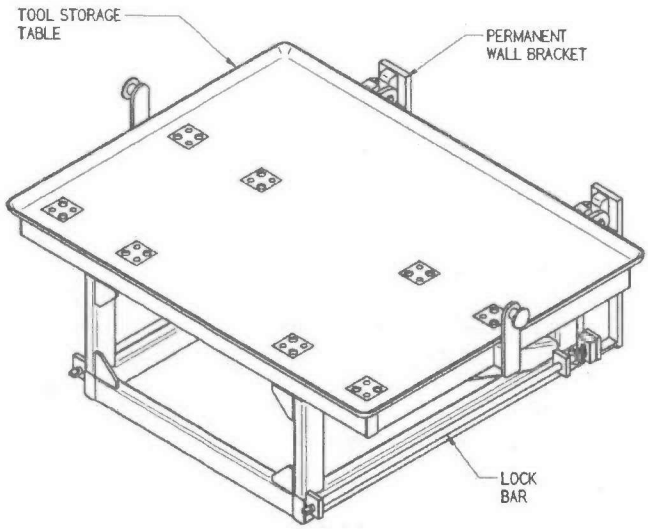

4.1.1.4.4 Consumable Templates

Melter Cave 1, 24590-HLW-MH-HSH-MHAN-00019 (Bubbler Template)
Melter Cave 1, 24590-HLW-MH-HSH-MHAN-00022 (Miscellaneous Template)
Melter Cave 1, 24590-HLW-MH-HSH-MHAN-00023 (Discharge Heater Lid Template)
Melter Cave 2, 24590-HLW-MH-HSH-MHAN-00069 (Bubbler Template)
Melter Cave 2, 24590-HLW-MH-HSH-MHAN-00072 (Miscellaneous Template)
Melter Cave 2, 24590-HLW-MH-HSH-MHAN-00073 (Discharge Heater Lid Template)

Non-Safety, SC-V

Refer to: 24590-HLW-M0-HSH-00094001, *HLW Vitrification System HSH Design Proposal Drawing Consumable Templates Arrangement.*

The bubbler and miscellaneous templates are used to load, transport and provide interim storage for new melter consumables. Interim storage reduces crane utilization and shield door cycling. Up to seven bubblers may be held on the bubbler template in a vertically staggered and overlapping array. The miscellaneous template holds a variety of melter consumables. It has thirteen circular holes to hold three 13.0 in. flange diameter items, two 11 in. flange diameter items, six 7 in. flange diameter items and two 5.5 in. flange diameter items. The discharge

heater template holds a single melter discharge chamber heater. This template is equipped with a remotely adjustable guide rail system to interface with the heater flange and guide the heater into the rectangular opening.

Figure 4-29 – Consumable Templates

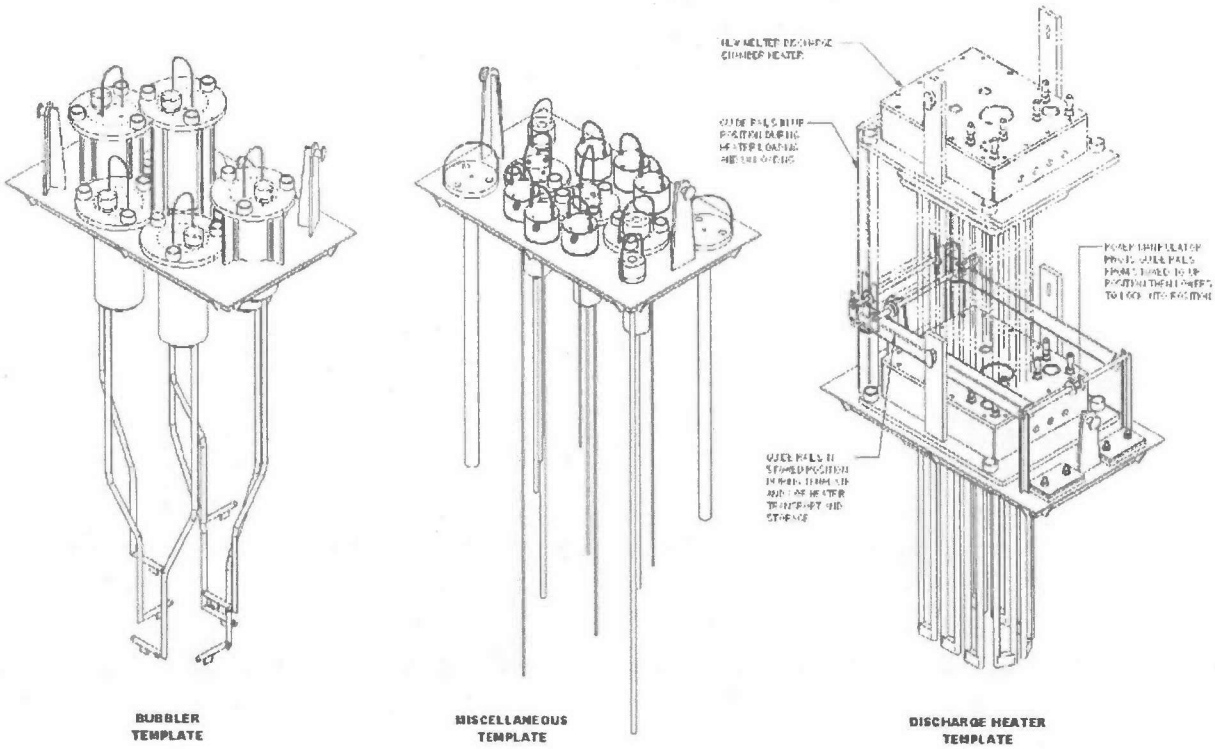

4.1.1.4.5 Structural Frame and Related Equipment

Melter Cave 1, 24590-HLW-MZ-HSH-BENCH-00001 (Structural Frame, SC-III)
Melter Cave 1, 24590-HLW-MZ-HSH-BENCH-00002 (Breakdown Area Enclosure Panels, SC-IV)
Melter Cave 1, 24590-HLW-MJ-HSH-LIFT-00025 (Beam Lift Hook, SC-V)
Melter Cave 2, 24590-HLW-MZ-HSH-BENCH-00006 (Structural Frame, SC-III)
Melter Cave 2, 24590-HLW-MZ-HSH-BENCH-00007 (Breakdown Area Enclosure Panels, SC-IV)
Melter Cave 2, 24590-HLW-MJ-HSH-LIFT-00026 (Beam Lift Hook, SC-V)

Non-Safety, SC noted above.

Refer to: 24590-HLW-M0X-M40T-00009, *Mechanical Handling Equipment List for HLW Systems HDH, HPH, HRH, and HSH*

Refer to: 24590-HLW-M0-HSH-00038001, *HLW Vitrification System HSH Design Proposal Drawing False Floor Panels Structural Frame Arrangement*

Refer to: 24590-HLW-M0-HSH-00050001, *HLW Vitrification System HSH Design Proposal Drawing Breakdown Table Enclosure Panels Arrangement*

The false floor panel structural frame is a free standing post and tube style frame that is remotely assembled. The complete frame consists of a set of welded vertical sub-frames and horizontally running support beams. The sub-frames rest on permanent floor plinths and wall brackets. The sub-frames are pinned to the plinths and brackets with the overhead power manipulator. The support beams drop into U shaped channels at the top of the sub-frames. The sorting frame assembly is located along the east wall of the melter cave and supports the sorting panels, posting panels, the east end of the alleyway panels and two storage shelves located underneath the sorting panels. The breakdown frame assembly supports the breakdown panels, the west end of the alleyway panels, the breakdown area hoist and the breakdown table enclosure panels.

The sorting frame storage shelves are used for long term storage of melter cave equipment and tools. They may only be removed by removing the sorting panels and lifting the shelves out the top opening. However, they are accessible from the front by the overhead power manipulator when an alleyway panel is removed. The breakdown area enclosure panels serve three purposes. They limit the spread of debris onto the melter cave floor during size reduction activities, they limit air currents past the breakdown table from the adjacent System HMH C5 shield door engineered air opening to allow the breakdown table downdraft feature to operate and they provide a reflective surface for lighting within the breakdown area as all lighting in this area is provided by through wall mounted lights in the west wall of the breakdown area adjacent to the shield windows.

A dedicated lifting hook is provided to remotely remove and replace the horizontal beams. All other lift points on the structural frame and related equipment are designed to work with the power manipulator crane slewing hoist and a hook adapter except for the main structural frame at the south end of the breakdown frame. This frame requires hoisting with the main 25 ton overhead crane. This frame also provides end stops for the breakdown area hoist.

Figure 4-30 – False Floor Panels Structural Frame

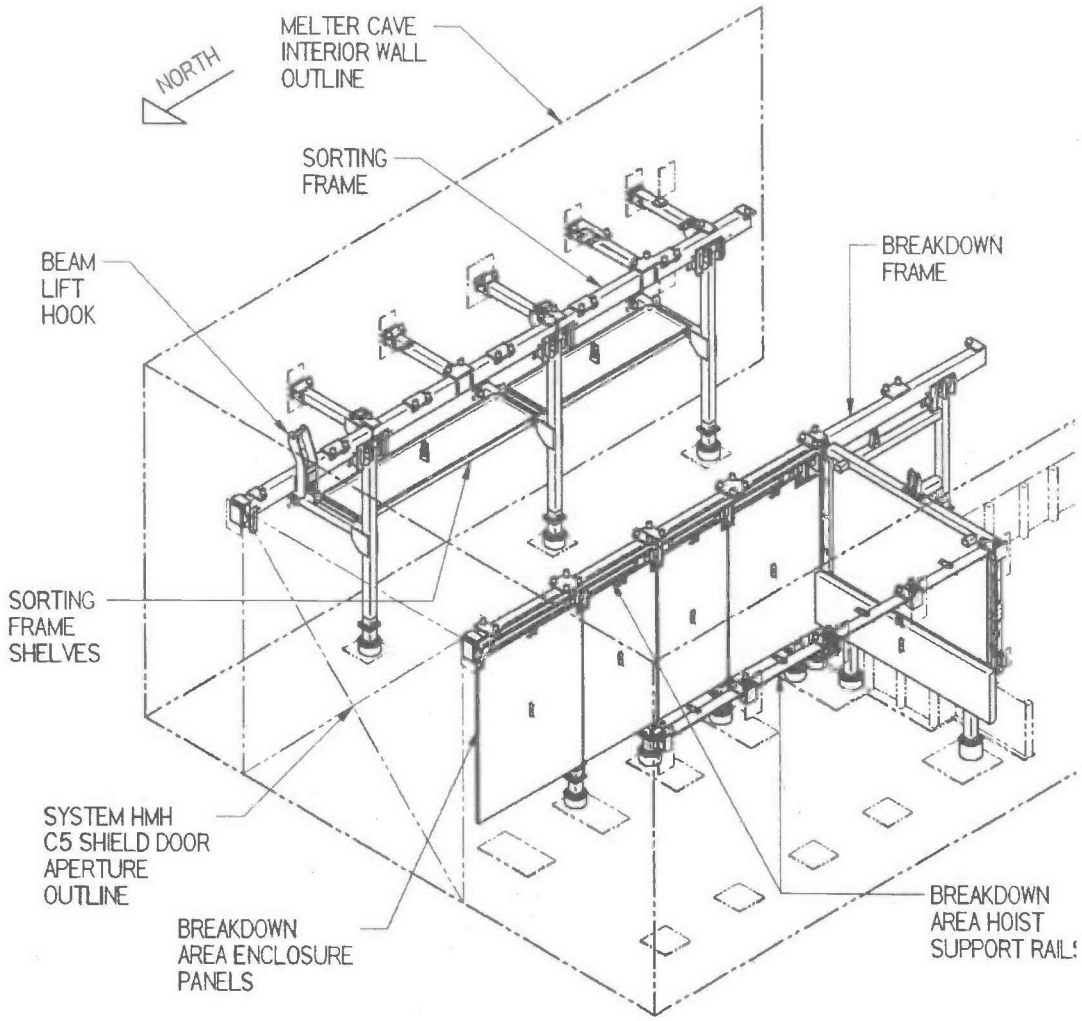

4.1.1.4.6 Consumable Storage Bucket and Related Equipment

Melter Cave 1, 24590-HLW-MY-HSH-BSKT-00001 (Consumable Storage Bucket, SC-IV)
Melter Cave 1, 24590-HLW-PY-HSH-BSKT-00003 (Glass Frit Addition Assembly, SC-V)
Melter Cave 2, 24590-HLW-PY-HSH-BSKT-00004 (Consumable Storage Bucket, SC-IV)
Melter Cave 2, 24590-HLW-PY-HSH-BSKT-00006 (Glass Frit Addition Assembly, SC-V)

Non-Safety, SC noted above

Refer to: 24590-HLW-M0-HSH-00099001, *HLW Vitrification System HSH Design Proposal Drawing Consumable Storage Bucket Arrangement*

The melter cave consumable storage bucket is used to temporarily store spent melter consumables after they are removed from the liquid glass pool and to remotely load start-up frit into a new melter. Spent consumables should be set into the bucket immediately after removal from the melter as glass tends to spall off the immersed portion of the consumable upon cooling. A consumable bucket template is provided to hold spent consumables before undergoing size reduction and segregation. The consumable storage bucket template holds up to five melter consumables.

To enable start up frit to be loaded into a new melter, the consumable storage bucket is equipped with a frit addition valve assembly, a power cord jumper, a bag breaker and a bucket tipping stand. The consumable storage bucket normally has a blank flange bolted to the bottom nozzle to contain glass shards from the spent consumables. The frit addition valve assembly is equipped with a pipe nozzle that activates the flapper valve on the melter frit addition nozzle. The bucket tipping stand is remotely set and bolted to an alleyway panel to allow the bucket to be tipped onto its side for MSM access from the east wall. Once the bucket is laid down, the blank flange is removed with the aid of an impact wrench and the frit addition valve assembly is installed. One end of the power cord is connected to the crane hook block with an MSM then the crane is used to upend the bucket and valve assembly. The other end of the power cord may then be connected to the valve assembly to allow valve opening and closing with the tool power outlet of the crane hook block. The valve assembly is equipped with status "traffic" lights that are viewable through the crane cameras to indicate slide gate valve position. Red is closed, green is open. The consumable bucket and valve assembly are transported into the CDA and set on the equipment stand. The main crane releases the lifting bail of the bucket and traverses approximately 6 ft south and 6 ft east to allow access to the bucket with the decontamination area crane and remain plugged into the valve assembly. The CDA crane is used to set the bag breaker into the bucket and to pick and place a super sack of glass frit into the consumable bucket. The bucket is capable of holding 5200 lbs of glass frit. Each batch fill of the melter is approximately 300 to 600 lbs of glass every 2 to 3 hours to allow a steady heat up rate of the melter and a total of glass frit charge of approximately 24000 lbs is required to raise the level of the melt pool to a nominal depth of 43 to 44 inches. Operator monitoring of the crane load cell and camera viewing of the fill height of the bucket are used to monitor glass frit addition. A single frit addition valve assembly is shared between the two melter caves.

Figure 4-31 – Consumable Storage Bucket

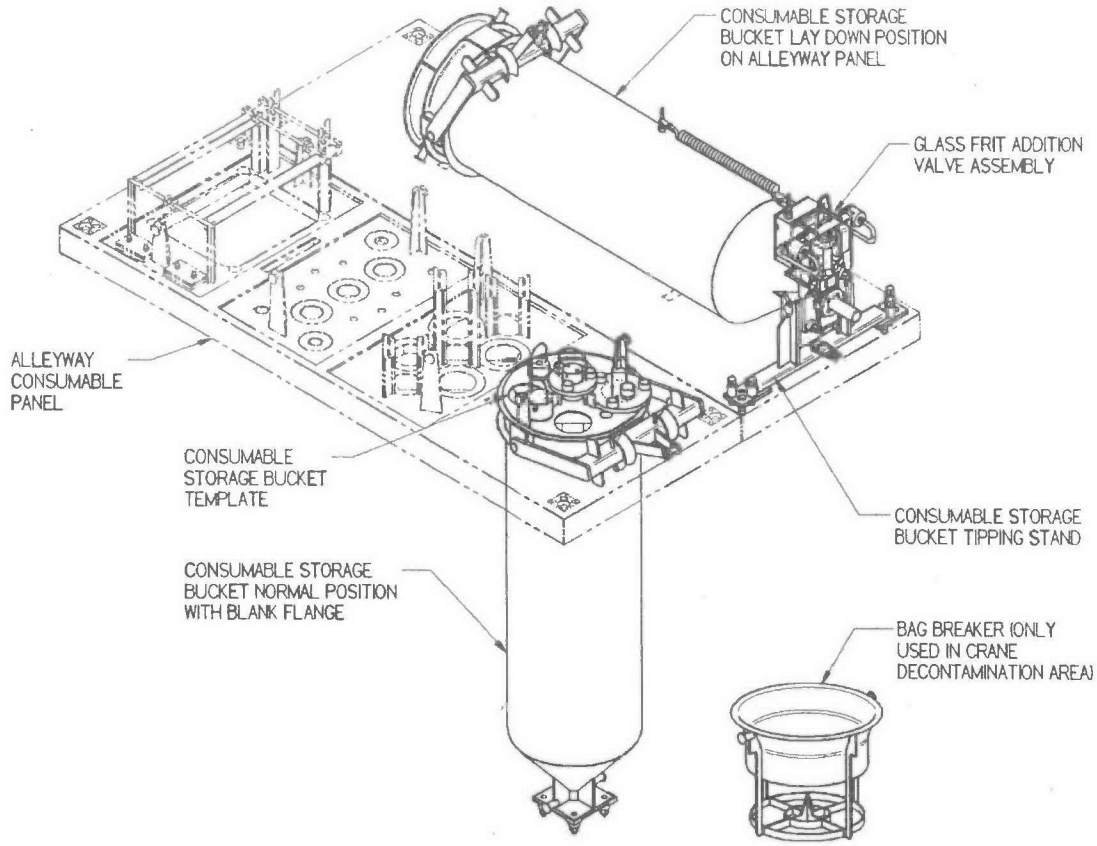

4.1.1.5 Melter and Vessel Handling Equipment

4.1.1.5.1 Melter Import Winch and Switch Assembly

Melter Cave 1 and 2, 24590-HLW-MH-HSH-RCVY-00005 (Melter Import Winch, SC-V)
Melter Cave 1 and 2, 24590-HLW-MH-HSH-MHAN-00049 (Import Winch Switch Assembly, SC-V)
Melter Cave 1 and 2, 24590-HLW-MH-HSH-RCVY-00022 (Import Winch Storage Container, SC-V)
Melter Cave 1, 24590-HLW-MH-HSH-MHAN-00030 (Winch and Switch Mounting Brackets, SC-III)
Melter Cave 2, 24590-HLW-MH-HSH-MHAN-00077 (Winch and Switch Mounting Brackets, SC-III)

Non-Safety, SC noted above

Refer to: 24590-WTP-3PS-MQL0-T0002, *Engineering Specification for Mechanical Handling Custom Designed and Fabricated Equipment*

Refer to: 24590-HLW-M0-HSH-00070001, *HLW Vitrification System HSH Design Proposal Drawing Melter Import Winch*

Refer to: 24590-HLW-M0-HSH-00070005, *HLW Vitrification System HSH Design Proposal Drawing Melter Import Winch Storage Container*
The melter import winch is used to import a new melter into either melter cave. The winch is driven by a variable speed drive motor to allow controlled ramp up and ramp down accelerations under 0.1g with speeds between 0 – 10 feet per minute. The winch is locally controlled from a temporary out-cave control panel under direct operator control with feedback from the melter import switch assembly. The winch is equipped with a remote hook and may be free spooled to allow hook engagement and cable staging with the power manipulator. The winch will be temporarily mounted on permanent brackets on the north of the feed vessel area berm wall. The winch is provided with its own remotable storage container for long term storage and contamination control during transport between the caves.

The melter import winch switch assembly provides control signals to the melter import winch. The switch assembly consists of a slowdown switch and two stop switches. The slowdown switch steps the winch motor to a creep speed when the melter gets close to its home position. Primary and backup switches stop the winch motor when the melter reaches its compressed bumper position. The winch cable stays tensioned while the crane-deployed large impact wrench is set on the melter seismic lock pin. The winch is released as the impact wrench is activated and the compressed bumper rolls the melter back as the seismic lock pin is driven through the seismic restraint lug. This sequencing allows the impact wrench to engage the tapered pin under melter rolling conditions rather than static conditions. Local operator control may override or emergency stop the winch at any point in the melter travel. The switch assembly is remotable and is temporarily mounted to a permanent fixture on top of the west melter seismic restraint lug. It interfaces with a machined target on the leading surface of the melter base (System HMP) for accurate positioning.

Figure 4-32 – Melter Import Winch Switch Assembly

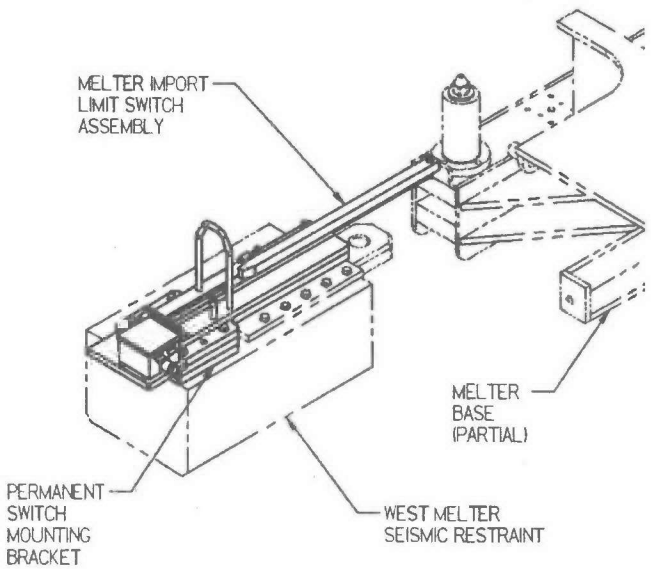

4.1.1.5.2 Melter Bus Import Hanger

Melter Cave 1 and 2, 24590-HLW-FH-HSH-TOOL-00001

Non-Safety, SC-V

Refer to: 24590-WTP-IID-MH-10-001, *Internal Interface Document for In-Cave Tools*

The melter bus import hanger is a simple fabrication that is used solely to position the melter bus cables and connector heads into a position suitable for melter import within the System HMH overpack (future) and for subsequent remote handling of the bus cables with the overhead power manipulator crane. As it is anticipated that the melter bus cables will be removed (cut) from the melter prior to spent melter export, the hanger is only used for import operations. It is manually installed during on-site melter assembly and remotely removed and exported from the cave after the bus cables have been marshaled into place.

Figure 4-33 – Melter Bus Import Hanger

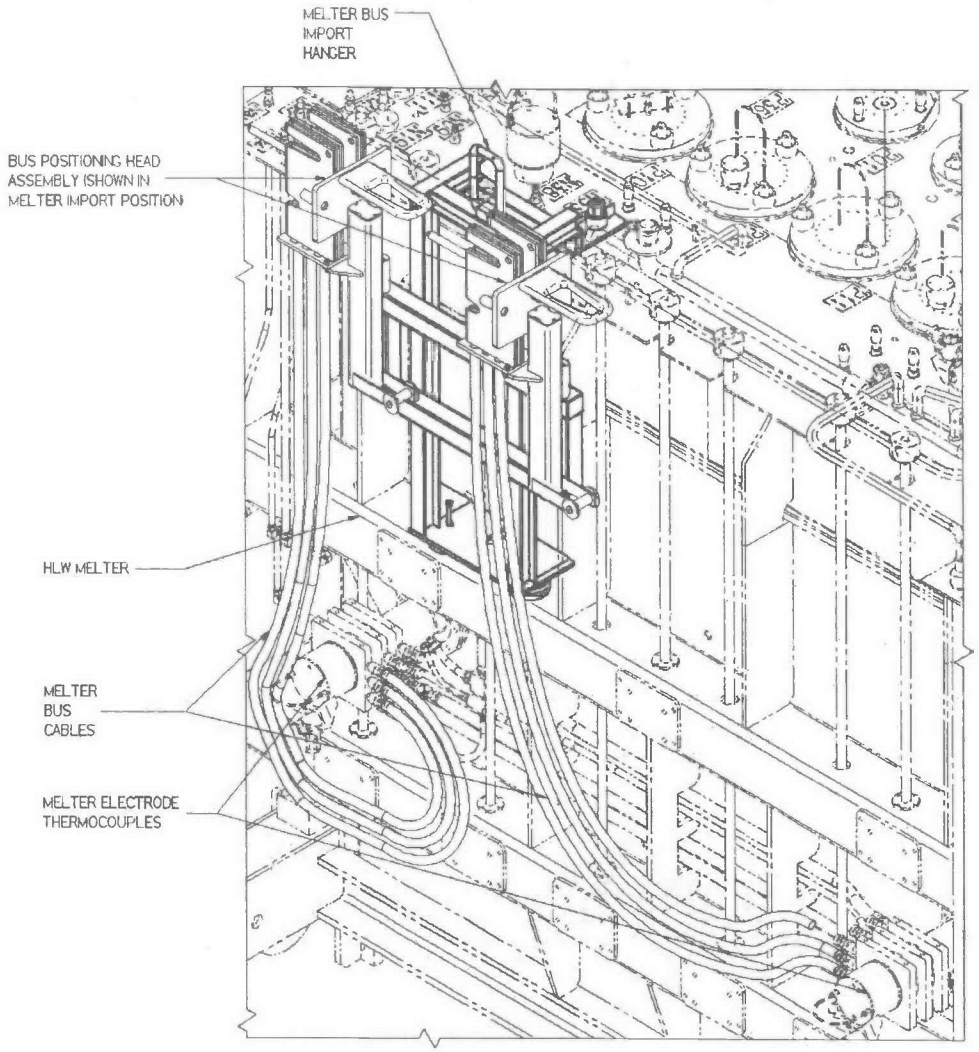

4.1.1.5.3 Melter Positioning Jack (Future)

Melter Cave 1, 24590-HLW-MZ-HSH-BENCH-00017 (Melter Jack and Lid Plinths, SC-III)
Melter Cave 2, 24590-HLW-MZ-HSH-BENCH-00018 (Melter Jack and Lid Plinths, SC-III)

Non-Safety, SC noted above.

Refer to: 24590-WTP-3PS-MQL0-T0002, *Engineering Specification for Mechanical Handling Custom Designed and Fabricated Equipment for permanent plinths and brackets*

The melter positioning jack (future) provides small (< ¼ in.) sideways adjustments to be made to the melter should the flanged wheels lose their alignment during the import sequence and / or the impact wrench fails to overcome the resistance to melter alignment provided by the lead-in taper on the seismic restraint pin. The positioning jack consists of a remote jack frame with two cylinders, two permanent floor plinths, two permanent wall brackets and two melter brackets attached to the melter base. The melter brackets align with the two permanent wall brackets. The wall brackets have a landing shelf for temporary support of one end of the jack frame and feature twin through holes for make up a double pinned clevis connection. The melter bracket features a single through hole for a clevis. The positioning jack frame mounts between the clevis eyes with an uplift restraint provided through a slip connection on the permanent floor plinths. The jack frame has two 15 ton maximum hydraulic cylinders mounted between the jack frame and the melter eyes to enable melter positioning. The jacks may be supplied from the out-cave hydraulic power unit through the hydraulic hose reel. Detail design and installation of the permanent interfaces was done to allow this provision to be detailed and implemented as required.

4.1.1.5.4 Melter Discharge Chamber Heaters Cable Tray

Melter Cave 1, 24590-HLW-FH-HSH-TOOL-00071 (Discharge Chamber Heaters Cable Tray, SC-III)
Melter Cave 1, 24590-HLW-MH-HSH-MHAN-00114 (Discharge Chamber Cable Tray Plinths, SC-III)
Melter Cave 1, 24590-HLW-FH-HSH-TOOL-00072 (Discharge Chamber Heaters Cable Tray, SC-III)
Melter Cave 1, 24590-HLW-MH-HSH-MHAN-00115 (Discharge Chamber Cable Tray Plinths, SC-III)

Non-Safety, SC-III

Refer to: 24590-WTP-IID-MH-10-001, *Internal Interface Document for In-Cave Tools* for discharge chamber heater cable trays and 24590-WTP-3PS-MQL0-T0002, *Engineering Specification for Mechanical Handling Custom Designed and Fabricated Equipment* for permanent plinths

Refer to: 24590-HLW-M0-HSH-00002, *HLW Vitrification System HSH Design Proposal Drawing Discharge Chamber Cable Tray Plinths*

The melter discharge heater cable trays are fabricated structures that provide routing and structural support to the high power cables and electrical connectors feeding the melter discharge chamber heaters. As the cables and trays are situated adjacent to the discharge chambers, and are overtop of the pour spouts and the melter import winch wire rope travel path, the cable trays are vertically adjustable and horizontally hinged, and are capable of being positioned and vertically supported by the melter during normal operations, and lowered and folded during melter import operations. Both operating positions of the cable tray may be accommodated with the cables in position on the tray. Two cable support posts equipped with cable hooks are also provided. They serve to marshal the cables to the tray from the through wall joggles. The tray must be hinged due to limited space between the melter discharge chamber and the HFP feed vessel berm wall. The tray must be vertically adjustable to attach to the melter discharge chamber during normal operation and clear underneath the Hanford electrical lower holder support braces mounted on the HFP feed vessel berm wall. The tray is equipped with a remote electrical ground connection to the permanent plinth attached to the east melter seismic restraint embed.

Figure 4-34 – Melter Discharge Chamber Heaters Cable Tray

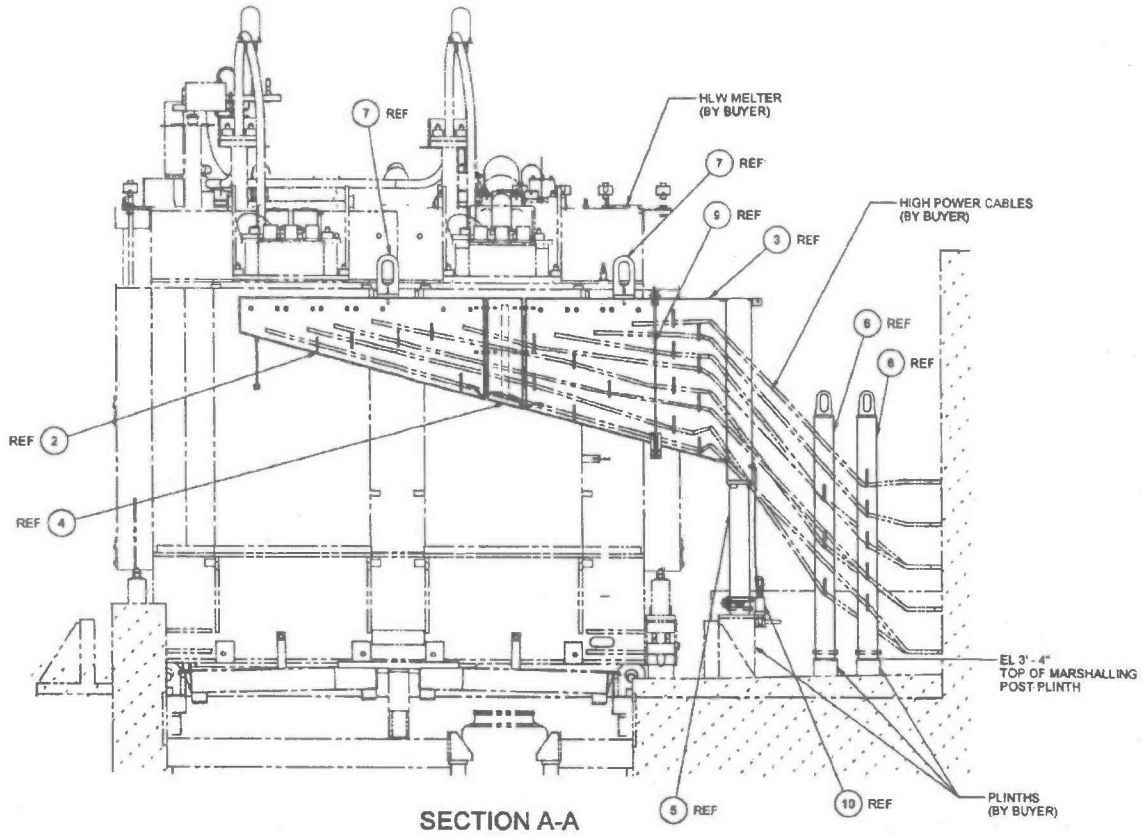

4.1.1.5.5 Melter Bus Plug Jack

Melter Cave 1 and 2, 24590-HLW-FH-HSH-TOOL-00049

Non-Safety, SC-V

Refer to: 24590-WTP-IID-MH-10-001, *Internal Interface Document for In-Cave Tools*

Refer to: 24590-HLW-MX-HSH-00002001, *HLW Vitrification System HSH Melter Bus Plug Jack Assembly*

The melter bus plug jack is a dedicated recovery component used to remotely install or remove the melter bus plug from the through wall liner in the event that the bus plug does not meet its intended service life. Bus plug replacement is not part of a normal melter change out. The bus plug jack consists of a structural jack frame and a translating slide. The frame engages and is locked to the bus plug shelf and the slide is remotely extended and retracted through a nut runner operated acme screw jack. The slide is equipped with tongues that interface with the bus plug. Remote pins are inserted through the tongues to mate the jack slide to the plug. The power manipulator deployed nut runner is used to retract the slide and plug to a point where the main overhead crane can pick the plug off of the shelf. Insertion of a new plug is by reversal of the sequence except that the jack is used to

insert the plug fully into the liner from the point where the crane east wall approach is met. The bus plug jack is designed to be hoisted with the lift beam supplied with the melter bus plug.

Figure 4-35 – Melter Bus Plug Jack

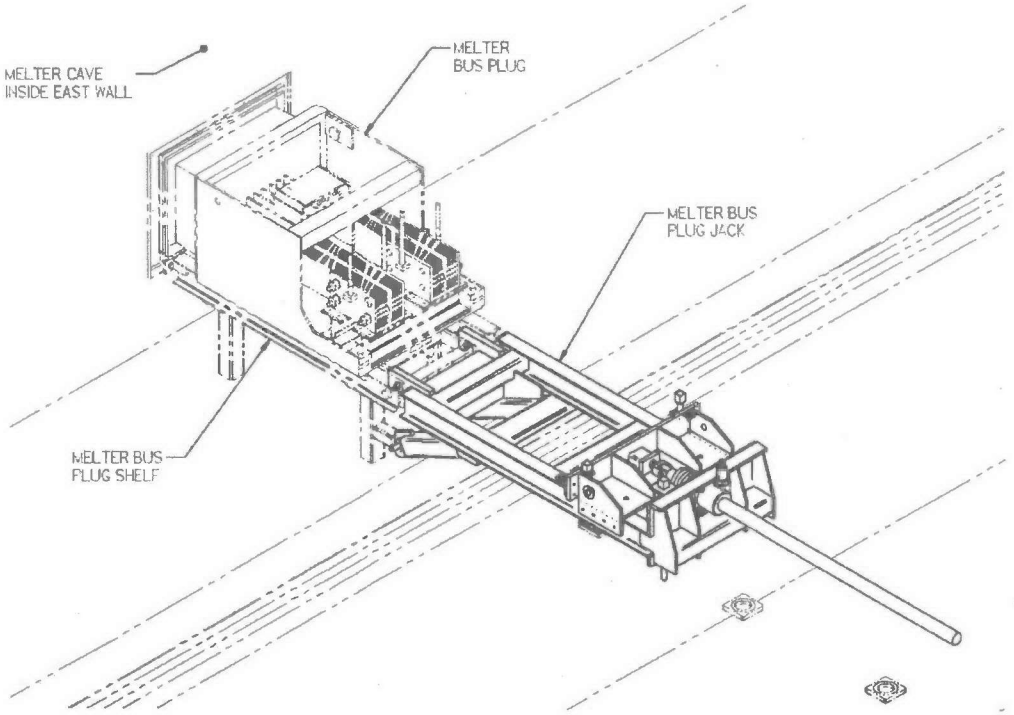

4.1.1.5.6 Melter Electrode Thermocouple Alignment Fixtures

Melter Cave 1 and 2, 24590-HLW-FH-HSH-TOOL-00069 (East Fixtures)
Melter Cave 1 and 2, 24590-HLW-FH-HSH-TOOL-00070 (West Fixtures)

Non-Safety, SC-V

Refer to: 24590-WTP-IID-MH-10-001, *Internal Interface Document for In-Cave Tools*

The melter electrode thermocouple alignment fixtures allow remote replacement of the melter electrode extension thermocouples with the overhead power manipulator crane arm. They interface with a fixed bracket mounted on each outboard electrode bus coupling. Tapped holes are provided on the bus coupling to allow simple installation of the fixed portion of the alignment tool during on-site melter assembly. The thermocouple tool is required to provide an alignment feature to slide a new thermocouple horizontally into the stepped ceramic insert of the electrode. The east and west fixtures are mirror images of each other.

The thermocouple alignment fixtures are simple positioning fixtures that align the melter electrode thermocouple with the drilled hole and stepped ceramic insert in the melter electrode extension during remote replacement of the thermocouple. The alignment fixture is necessary for four reasons; 1) the melter electrode extension has no inherent alignment features to guide the thermocouple into place, 2) the radial clearance between the thermocouple and receiving hole in the electrode extension, including lead in taper, is under ¼ in. and 3) the

electrode thermocouples are removed and installed in a horizontal plane over a distance of approximately 52 in. and 4) the thermocouple design life is estimated at 12 months.

4.1.1.5.7 Vessel Transfer Cart and Import Winch

Melter Cave 1 and 2, 24590-HLW-MQ-HSH-TRLY-00003 (Vessel Transfer Cart)
Melter Cave 1 and 2, 24590-HLW-MH-HSH-MHAN-00044 (Vessel Transfer Cart Import Winch)
Melter Cave 1 and 2, 24590-HLW-MH-HSH-MHAN-00086 (Vessel Transfer Cart Import Winch Storage Container)

Non-Safety, SC-V

Refer to: 24590-WTP-3PS-MQL0-T0002, *Engineering Specification for Mechanical Handling Custom Designed and Fabricated Equipment* for permanent plinths and brackets

Refer to: 24590-HLW-M0-HSH-00102001, *HLW Vitrification System HSH Design Proposal Drawing Melter Cave 1 & 2 Vessel Transfer Cart*

The vessel transfer cart is used to transfer miscellaneous melter cave equipment into the System HMH C2/C3 melter airlock for subsequent hoisting through the crane maintenance area floor hatch or to import a replacement vessel into and export a failed vessel out of the melter cave. The transfer cart is equipped with interchangeable wheel sets for use in both the airlock rails and melter cave rails. Under normal operations, the transfer cart is set up for equipment import into the C2/C3 airlock. For vessel replacement, the transfer cart has the capacity and interfacing frames to carry either a feed or feed preparation vessel (System HFP), a high efficiency mist eliminator (HEME) (System HOP) vessel, or a submerged bed scrubber (SBS) (System HOP) vessel. For miscellaneous equipment import from the melter assembly pad to the C2/C3 airlock, the transfer cart is equipped with a front and rear 2 in. diameter ball hitch for towing with a commercially available powered trailer mover (i.e. Nu-Star Power Pusher or similar). For vessel replacement, the transfer cart is staged with the appropriate frame and replacement vessel and loaded into the System HMH melter overpack (future) for delivery to the melter cave via the melter transport System HMH. The transfer cart becomes a disposable item during the replacement operation. The transfer cart is remotely winched into the melter cave with the transfer cart import winch and is winched out by the overpack (future) (System HMH) winch. The cart is provided with locking pins that engage with receivers in the floor of the melter cave. The SBS is the only vessel that may be imported in an upright configuration. All other vessels enter the cave through the System HMH C5 shield door in a horizontal orientation and must be tipped up on the transfer cart with the appropriate lifting beam before being moved.

Figure 4-36 – Vessel Transfer Cart

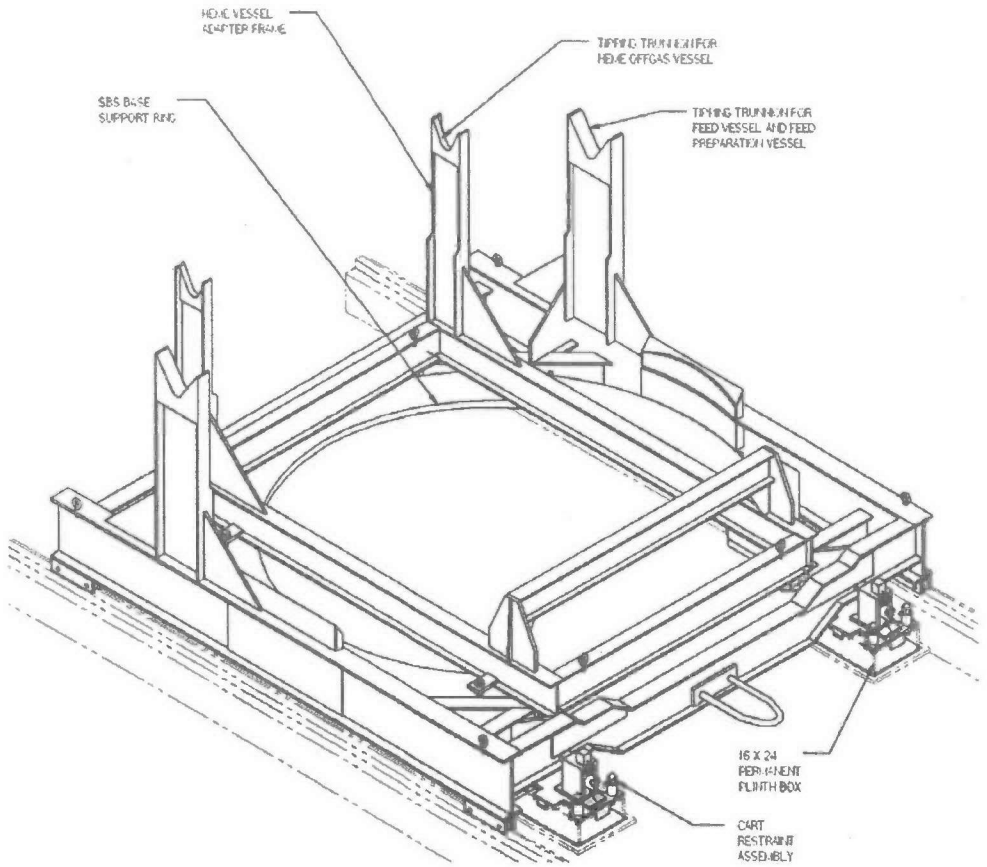

The vessel transfer cart import winch is used to import the vessel transfer cart into the melter cave from the System HMH melter overpack (future). The winch is remotely operated within the melter cave using the power manipulator deployed nut runner. It is mounted on a permanent floor plinth north of the melter when required for cart import. The permanent floor plinth is identical to, and shares a plant item number with, the 24 by 16 inches permanent plinths provided for melter lid handling. The winch is provided with a remotely operable storage container for long term storage and contamination control during transport between the caves.

4.1.1.5.8 Vessel and HEME Filter Set Down Pads

Melter Cave 1, 24590-HLW-MH-HSH-MHAN-00102 (Vessel and HEME Filter Set Down Pads, SC-III)
Melter Cave 1, 24590-HLW-MH-HSH-MHAN-00112 (HEME Filter Handling Fixture, SC-V)
Melter Cave 2, 24590-HLW-MH-HSH-MHAN-00104 (Vessel and HEME Filter Set Down Pads, SC-III)
Melter Cave 2, 24590-HLW-MH-HSH-MHAN-00113 (HEME Filter Handling Fixture, SC-V)

Non-Safety, SC noted above.

Refer to: 24590-WTP-3PS-MQL0-T0002, *Engineering Specification for Mechanical Handling Custom Designed and Fabricated Equipment* for set down pads and 24590-QL-MRA-MV00-00005 (technical note 30) for filter handling fixture

Refer to: 24590-HLW-M0-HSH-00105001, *HLW Vitrification System HSH Design Proposal Drawing Melter Lid and Jack Plinths General Arrangement*

To enable vessel replacement, four hardened vessel set down pads have been provided in each melter cave floor. The vessel set down pads are large rectangular pads that are radially arranged around a center HEME filter set down pad. The vessel set down pads allow any single melter cave process vessel to be staged on them. The center HEME filter set down pad is used in conjuncture with the HEME filter handling fixture to remotely separate each filter element from the assembled candle. Four precision reverse tapered holes are machined into the HEME filter set down pad. Each vessel set down pad has one such hole. These work holding features are provided to allow an expanding segmented bore clamp or hydraulic expansion arbor to locate and lock future equipment onto the pads. Overhead power manipulator removable dust covers are provided for each hole to prevent the ingress of particulate when not in use. The upper surface of the pads is at elevation +3 ft 2 in. and the dust covers are limited to ½ inch height to allow clearance for the melter to traverse overtop of them.

Figure 4-37 – Vessel Set Down Pads

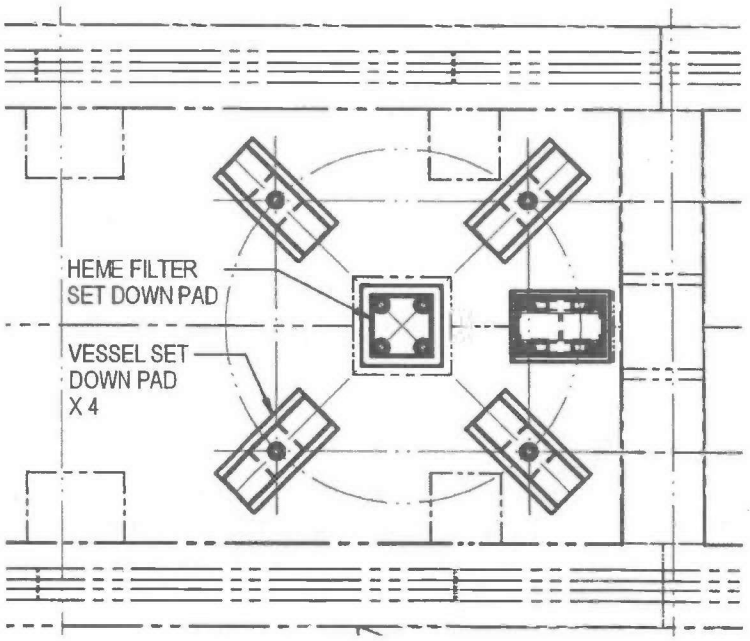

4.1.1.5.9 Melter Lid Handling Equipment

Melter Cave 1, 24590-HLW-MZ-HSH-BENCH-00017 (Melter Lid and Jack Plinths, SC-III)
Melter Cave 2, 24590-HLW-MZ-HSH-BENCH-00018 (Melter Lid and Jack Plinths, SC-III)

Non-Safety, SC-III

Refer to: 24590-HLW-M0-HSH-00105001, *HLW Vitrification System HSH Design Proposal Drawing Melter Lid and Jack Plinths General Arrangement*

To allow future melter breakdown operations at the end of facility life, the melter cave has been equipped with certain provisions and up front engineering of future equipment necessary to remove and handle the melter lid. The cave has been equipped with a set of six permanent plinth boxes to set and tip a melter lid over after removal with the plasma torch. This allows access to the frozen glass pool within the melter and the underside of the melter lid for glass and refractory breakout and removal. Four 16 by 16 inch square and two 24 by 16 inch rectangular plinth boxes are permanently installed in the melter cave floor. Each plinth box is equipped with four precision placed holes through the top plate and an open channel underneath the plate on each side of the box that allows remote nuts to be installed for attaching the melter lid tipping equipment to them. To enable melter passage, the plinth boxes upper surface is at elevation +3 ft 1 in. Similar to the vessel set down pads, the plinth boxes are also equipped with dust caps. The remote nuts must be removed from the channels to allow the melter to traverse overtop as the sucker stick on the remote nuts would interfere with the melter base frame. For procurement purposes, the permanent melter lid handling plinths, melter jack floor plinths and wall brackets and the vessel transfer cart import winch floor plinth all share these plant item numbers.

Figure 4-38 – Melter Lid Handling Equipment

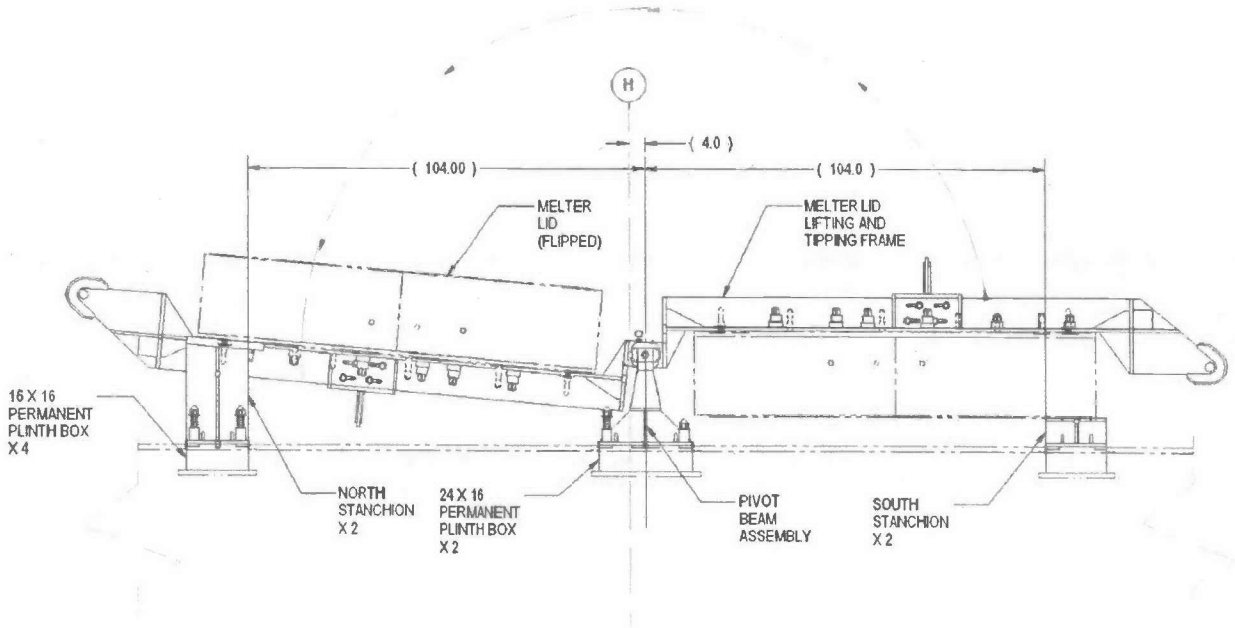

4.1.1.6 Maintenance and Decontamination Equipment

4.1.1.6.1 Central Vacuum System

Melter Cave 1, 24590-HLW-MH-HSH-MHAN-00016
Melter Cave 2, 24590-HLW-MH-HSH-MHAN-00068

Non-Safety, SC-III

Refer to: 24590-HLW-3PS-MHP0-T0001, *Engineering Specification for Central Vacuum (Source Extraction) Cleaning System*

Refer to: 24590-HLW-M0-HSH-00001001, *HLW Vitrification System HSH Design Proposal Drawing Central Vacuum System General Arrangement*

The central vacuum system is used to reduce gross contamination levels on equipment and within the cave and provide source extraction at the point of generation. The central vacuum system is a two-stage, high flow skid mounted vacuum system that is capable of picking up and conveying ¾ inch glass spheres. It provides approximately 170 scfm air flow at the relief valve setting of 11 inches Hg and deadheads at 160 scfm at 12.4 inches Hg. A header network is connected to the skid and runs along the north, east and west interior walls of the melter cave. A section of the breakdown table is connected to the vacuum header to provide a downdraft function during plasma cutting torch operations. A hose assembly and connection points for the hose are provided along the east wall (x 2), west wall (x 2) and north wall above the breakdown table.

The vacuum system consists of a remotely maintainable plinth-mounted vacuum skid, in-cave tubing network, hose assembly and various hose attachment vacuum tools. The skid consists of:

- A cyclone separator
- A solid waste basket
- A drawer slide
- Two roughing filters in series
- A centrifugal blower and radiation hardened motor

The cyclone directs oversize material to a solid waste basket and undersize to the roughing filters. After passing through the roughing filters, the air is exhausted back into the melter cave. The solid waste basket sits on a drawer slide that extends for basket removal. The filters are remotely replaceable with the crane mounted power manipulator. The skid is designed to be both remotely removable and maintainable. Maintenance is performed on the breakdown table to allow access by the through wall MSM and HPM. To remove the skid, the skid must be disconnected from the network and a counterweight installed on the frame to shift the center of gravity within the overhead 25 ton crane hook envelope. The same counterweight is used to remove the pump support package of the decontamination tank. Two out-cave local control panels are provided for operation. One is located near the vacuum skid on the east side of the cave at elevation +14 ft and the other is located near the breakdown table on the west side of the cave at elevation 0 ft.

Figure 4-39 – Central Vacuum System Network (Typical)

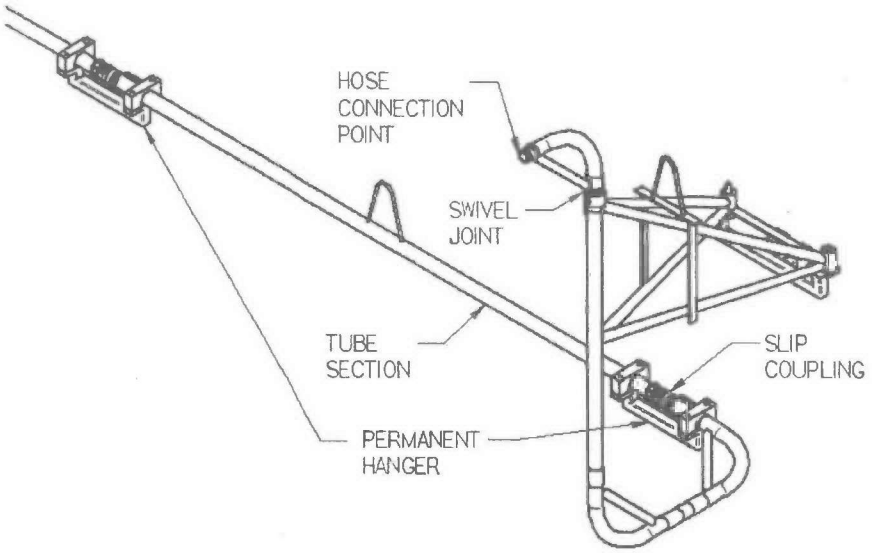

Figure 4-40 – Central Vacuum System Skid

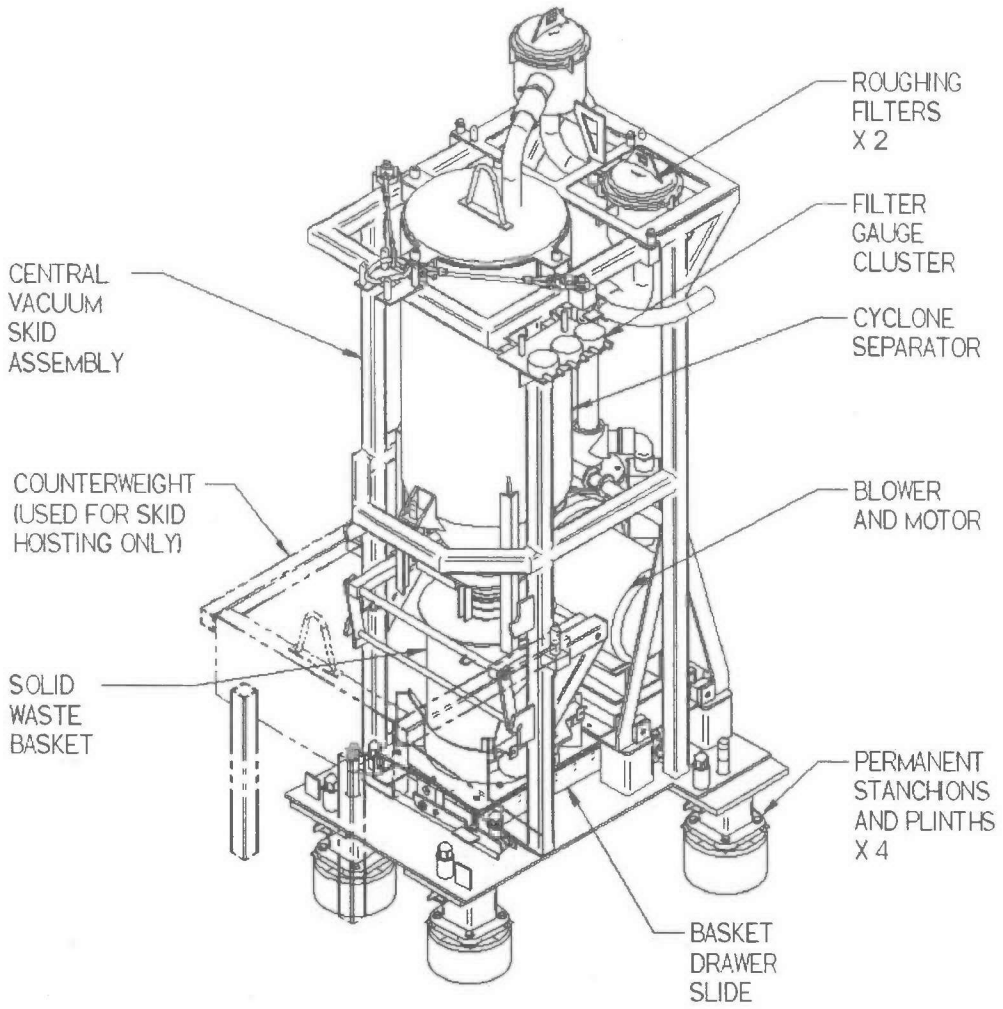

Except for the permanent hangers, the tubing network is entirely removable to allow cleanout or replacement. Rigid tube is placed and connected through a power manipulator operable slip joint. A flexible hose assembly connects to several fixed pick up points within the cave to allow full cave coverage. The hose assembly is suspended from the slewing hoist and manipulated with the crane mounted power manipulator. A tool (vacuum attachments) rack and a hose rack are located above the skid on the north wall of the melter cave. The vacuum attachment stand may be hung from the wall rack or located at any convenient location on the false floor. Crevice, brush and floor attachments are provided. The hose couplings and vacuum attachments automatically couple when manipulated in the provided storage racks. Manipulator operable caps are provided to place over the inactive pick up points.

4.1.1.6.2 Shuttle Cart

Melter Cave 1, 24590-HLW-MQ-HSH-TRLY-00004
Melter Cave 2, 24590-HLW-MQ-HSH-TRLY-00006

Non-Safety, SC-IV

Refer to: 24590-WTP-3PS-MQL0-T0002, *Engineering Specification for Mechanical Handling Custom Designed and Fabricated Equipment for permanent plinths and brackets*

Refer to: 24590-HLW-M0-HSH-00120001, *HLW Vitrification System HSH Design Proposal Drawing Shuttle Cart General Arrangement*

The shuttle cart transports equipment between and within the CMA and CDA at the elevation +23 ft floor level while minimizing radiological cross contamination in two distinct ways. It minimizes the need to bring a potentially contaminated melter cave overhead 25 ton crane or power manipulator crane into the CMA for equipment retrieval and it operates on fully independent rail and wheel sets between the CDA and CMA. It transports the equipment stand with payloads (including agitator decontamination template with agitator and other decontamination templates and equipment). The shuttle cart is equipped with multiple wheels and an extended length beyond the payload area to enable the cart to span across the horizontal shield door trench as it moves between the CMA and CDA.

The cart has a flat payload area to place equipment on and manually removable plinths on the payload area corners to secure the equipment stand to. It has a battery charging station in the CMA. It has trunnions at both ends which allows lifting it from either end (e.g., to lift or lower it through the maintenance area hatch) or from 4-points. It is of stainless steel construction for decontamination and of a modular design with special provisions for contact maintenance with gloved hands.

Figure 4-41 – Shuttle Cart Arrangement

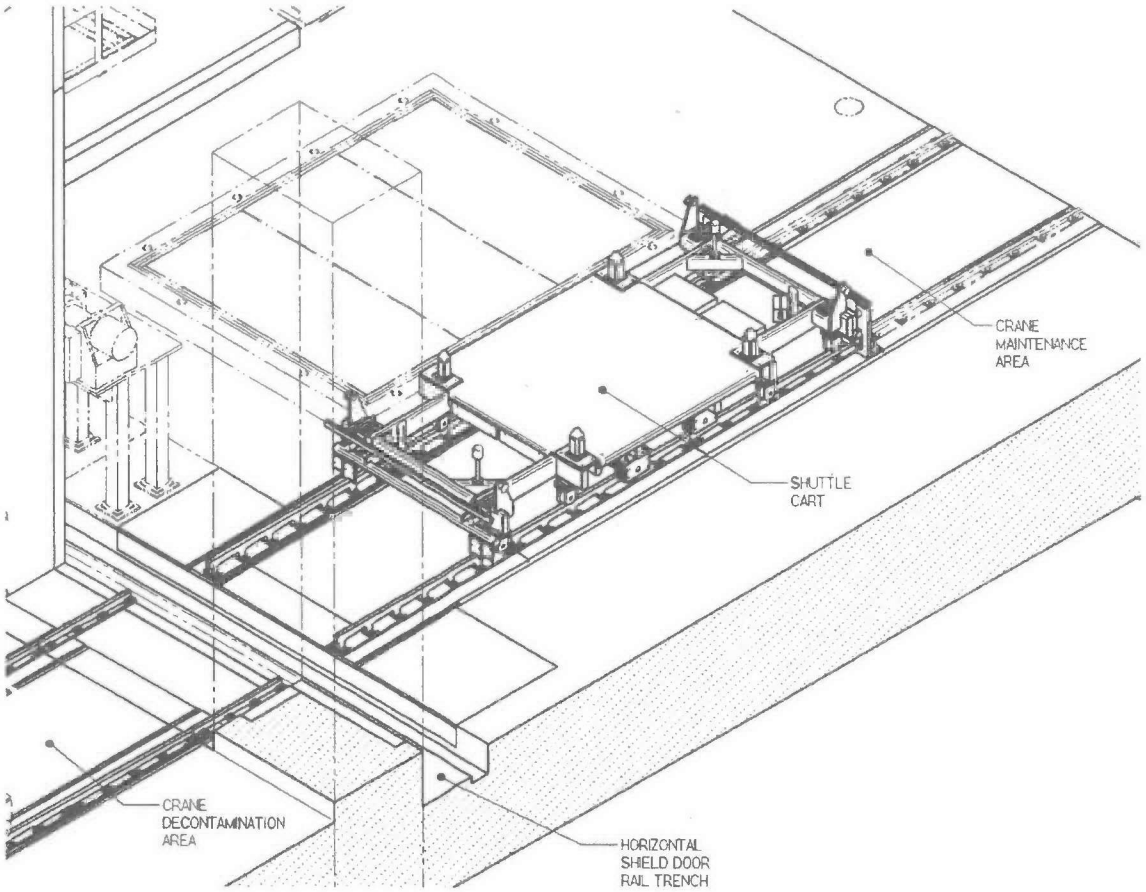

4.1.1.6.3 Equipment Stand

Melter Cave 1, 24590-HLW-MH-HSH-MHAN-00010 (Equipment Stand)
Melter Cave 1, 24590-HLW-MZ-HSH-BENCH-00015 (Plinths)
Melter Cave 2, 24590-HLW-MH-HSH-MHAN-00064 (Equipment Stand)
Melter Cave 2, 24590-HLW-MZ-HSH-BENCH-00016 (Plinths)

Non-Safety, SC-III*

Refer to: 24590-WTP-3PS-MQL0-T0002, *Engineering Specification for Mechanical Handling Custom Designed and Fabricated Equipment*

Refer to: 24590-HLW-M0-HSH-00097001, *HLW Vitrification System HSH Design Proposal Drawing Equipment Stand Plinth and Embed General Arrangement*

An equipment stand is provided as a set down, interim storage and a transfer point for melter cave process and mechanical handling equipment. It interfaces with the maintenance and decontamination templates for staging System HFP agitators, transfer pumps and ADS pumps prior to maintenance or decontamination activities. It interfaces with the consumable storage bucket and consumable templates to handle System HFP melter

consumables and melter start-up glass frit. It also interfaces with the decontamination area drip pans to allow storage of the pans on the frame. The stand is provided with four sets of plinths to allow positioning at the: elevation 0 ft in equipment decontamination pit, elevation +23 ft in crane decontamination area (west location), elevation +23 ft in crane decontamination area (east location) and on the shuttle cart for transferring equipment between the crane maintenance and crane decontamination areas.

The equipment stand is comprised of two structural frames constructed of box beams and plates. The two sections are fundamentally identical except of different heights. Both have lifting trunnions, hollow leg ends that fit over the tapered plinths, with locking pin mechanisms, and tapered plinths at the top corners to allow stacking, placing on floor plinths, and transporting on the shuttle cart between the crane maintenance and decontamination areas. The two sections may be stacked and set in either order as the interfaces at the top of each frame section and the bottom of each frame section are identical. It is made in two pieces to allow the power manipulator bridge to pass by over the top when split into its two parts. The mechanism that locks the stand to the floor plinths and the stand sections to each other is a simple paddle operated lever that actuates the locking pins through a forked throw linkage. The paddle is operated by the weight of a crane hook block pushing downward or by manipulator. Both sections also have flat top surfaces, open fronts and bump stops for positioning and setting the decontamination templates.

* The SC-III seismic rating of the equipment stand is for the fully assembled stand with a maximum payload of 1000 lbs. This allows the stand with any empty maintenance, decontamination, or consumable template to be left indefinitely. The seismic rating is not applicable for the equipment stand with a payload exceeding the 1000 lb limit as collapse or toppling or the equipment stand during a seismic event under fully loaded conditions does not compromise the C5 boundary. There is adequate margin against perforation of the floor.

Figure 4-42 – Equipment Stand

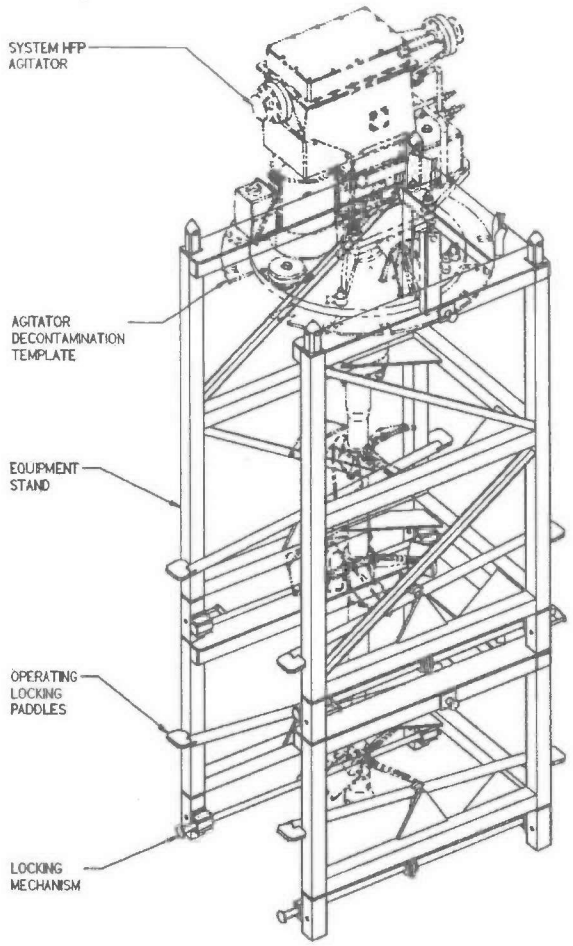

4.1.1.6.4 Decontamination Area Catch Pan

Melter Cave 1, 24590-HLW-MH-HSH-MHAN-00017
Melter Cave 2, 24590-HLW-MH-HSH-MHAN-00058

Non-Safety, SC-V

Refer to: 24590-WTP-3PS-MQL0-T0002, *Engineering Specification for Mechanical Handling Custom Designed and Fabricated Equipment*

Refer to: 24590-HLW-M0-HSH-00098001, *HLW Vitrification System HSH Design Proposal Drawing HSH Decon Area Catch Pans General Arrangement*

Decontamination area catch pans provide a surface that is easy to decontaminate directly underneath the travel route from the melter cave to the equipment stand and equipment decontamination pit. They serve to catch solid and liquid drips from melter cave process equipment as they are being carried in the crane decontamination area.

The catch pans are formed stainless steel pans with integral lifting bails and support legs. They are capable of stacking to reduce the overall floor footprint. They can be lowered into the decontamination pit for remote decontamination. They interface with a lifting beam for handling in the horizontal orientation. They also have features to allow interfacing with the decontamination tank bump stop for tipping of the catch pan to drain their contents into the decontamination tank.

Figure 4-43 – Decontamination Area Catch Pan

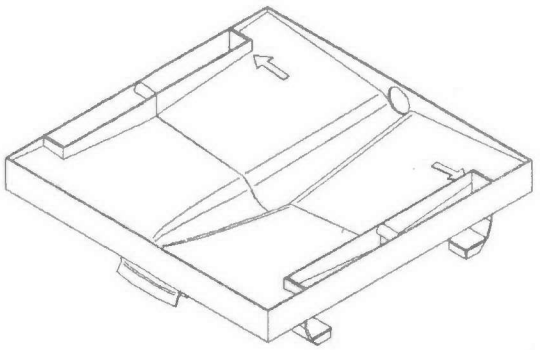

4.1.1.6.5 Templates and Storage Racks

Melter Cave 1, 24590-HLW-MH-HSH-MHAN-00095 (Maintenance Templates Storage Rack)
Melter Cave 1, 24590-HLW-MH-HSH-MHAN-00036 (ADS Pump Maintenance Template)
Melter Cave 1, 24590-HLW-MH-HSH-MHAN-00037 (Transfer Pump Maintenance Template)
Melter Cave 1, 24590-HLW-MH-HSH-MHAN-00038 (Agitator Maintenance Template)
Melter Cave 1, 24590-HLW-MH-HSH-MHAN-00097 (Decontamination Templates Storage Rack)
Melter Cave 1, 24590-HLW-MH-HSH-MHAN-00033 (ADS Pump Decontamination Template)
Melter Cave 1, 24590-HLW-MH-HSH-MHAN-00034 (Transfer Pump Decontamination Template)
Melter Cave 1, 24590-HLW-MH-HSH-MHAN-00035 (Agitator Decontamination Template)
Melter Cave 2, 24590-HLW-MH-HSH-MHAN-00096 (Maintenance Templates Storage Rack)
Melter Cave 2, 24590-HLW-MH-HSH-MHAN-00082 (ADS Pump Maintenance Template)
Melter Cave 2, 24590-HLW-MH-HSH-MHAN-00083 (Transfer Pump Maintenance Template)
Melter Cave 2, 24590-HLW-MH-HSH-MHAN-00084 (Agitator Maintenance Template)
Melter Cave 2, 24590-HLW-MH-HSH-MHAN-00098 (Decontamination Templates Storage Rack)
Melter Cave 2, 24590-HLW-MH-HSH-MHAN-00079 (ADS Pump Decontamination Template)
Melter Cave 2, 24590-HLW-MH-HSH-MHAN-00080 (Transfer Pump Decontamination Template)
Melter Cave 2, 24590-HLW-MH-HSH-MHAN-00081 (Agitator Decontamination Template)

Storage Racks are Non-Safety, SC-III
Templates are Non-Safety, SC-V

Refer to: 24590-WTP-3PS-MQL0-T0002, *Engineering Specification for Mechanical Handling Custom Designed and Fabricated Equipment*

Refer to: 24590-HLW-M0-HSH-00035001, *HLW Vitrification System HSH Design Proposal Drawing False Floor Panels Structural Frame Embeds*

Refer to: 24590-HLW-M0-HSH-00065001, *HLW Vitrification System HSH Design Proposal Drawing Maintenance Templates and Storage Rack*

Refer to: 24590-HLW-M0-HSH-00096001, *HLW Vitrification System HSH Design Proposal Drawing Decontamination Templates and Storage Rack*

Dedicated maintenance and decontamination templates are provided for the System HFP agitator, transfer pump and air displacement slurry (ADS) pump. The maintenance templates adapt the square cutout in the equipment maintenance area platform to the vessel support flange of the process equipment. The decontamination templates adapt the rib structure of the decontamination tank to the vessel support flange of the process equipment. As the agitator has the largest flange, the maintenance and decontamination agitator templates form the base support for both the transfer pump and ADS pump maintenance and decontamination templates, respectively.

The maintenance templates are located in the CMA along the west wall immediately south of the main crane cable reel. The agitator template is equipped with hand operated clamps to secure the template to the platform support steelwork for process equipment testing following maintenance. The maintenance templates are equipped with a dedicated storage rack that allows the templates to be stored in a vertical orientation. As the agitator template forms the base for the other two templates, it is placed in the outermost position on the storage rack. As the storage rack is outside the hook envelope of any overhead crane, the maintenance pit jib crane must be used to remove the templates from the storage rack and place them on the platform. The hoist is a two speed motor to allow finer positioning of the templates to align them with the dowels. A four leg wire rope bridle is provided for this purpose. Each template provides the same dowel and stud interface to the process equipment as the mating vessel flange does. The remote nuts on the maintenance template storage rack may be snug tightened to hold the agitator in place on the template but only need to be finger tight when used on the rack itself. The through hole in the agitator template is deliberately off center to allow the agitator drive to fit within the platform handrails.

Figure 4-44 – Maintenance Templates and Storage Rack

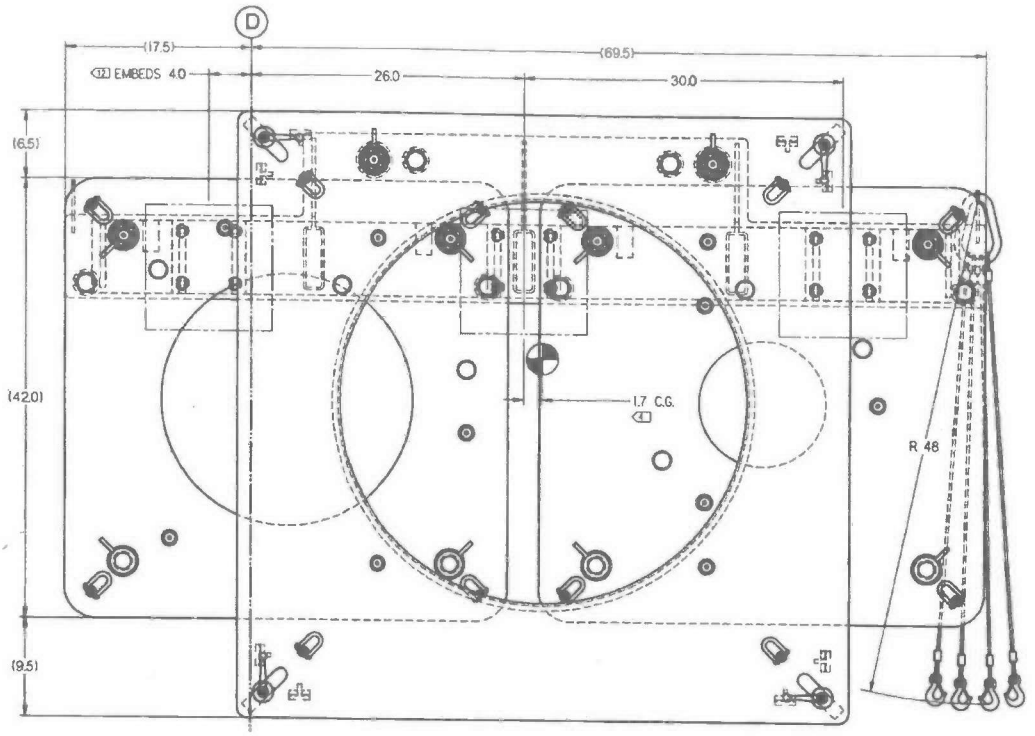

The decontamination templates are located in the CDA along the east wall partially below the upper decontamination crane access platform. They provide a common remote interface between the melter cave vessel-mounted equipment and the decontamination equipment with consistent set-down and hoist features. The agitator template is equipped with rectangular notches in the support flange that allow the template to be lowered into the decontamination tank then rotated about the vertical axis to set the template at one of the step elevations provided by the support rib structure of the tank internal spray ring assembly. Mechanical stop pins on the underside of the template and alignment indicators on the top side provide indication of proper axis orientation. The decontamination templates are equipped with a dedicated storage rack that allows the templates to be stored in a horizontal orientation for remote pick and place operations using the decontamination area crane and the 4.5 ton equipment template lift beam. Bump stops and guides assist in remotely positioning each template into position on the storage rack. As the agitator template forms the base for the other two templates, it is placed in the uppermost position on the storage rack. As these templates are designed and intended to be used remotely, the lift bails of the templates are within the east wall hook approach of the decontamination area crane. Each template provides the same dowel and stud interface to the process equipment as the mating vessel flange does.

The decontamination templates have front openings in them to allow the process equipment to be laterally walked into the template with the 25 ton main crane while the template(s) are staged on the equipment stand. Once the process equipment is loaded onto the template(s), the remote nuts must be tightened with crane deployed large impact wrench to provide structural support for subsequent hoisting operations. The entire assembly is then picked and placed into the decontamination tank for immersion and chemical decontamination or set on the decontamination turntable for spray lance decontamination.

Figure 4-45 – Decontamination Templates and Storage Rack

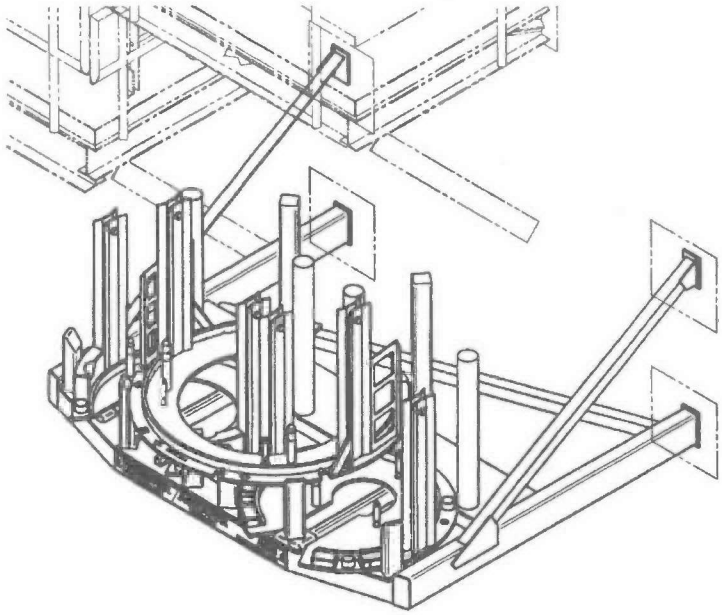

4.1.1.6.6 Decontamination Tank and Related Equipment

Melter Cave 1, 24590-HLW-MT-HSH-TK-00001 (Decontamination Tank)
Melter Cave 1, 24590-HLW-MT-HSH-TK-00003 (Pump Support Package)
Melter Cave 2, 24590-HLW-MT-HSH-TK-00002 (Decontamination Tank)
Melter Cave 2, 24590-HLW-MT-HSH-TK-00004 (Pump Support Package)

Non-Safety, SC-III

Refer to: 24590-WTP-3PS-HD00-T0001, *Engineering Specification for Maintenance Decontamination Equipment*

Refer to: 24590-HLW-M0-HSH-00071, *HLW Vitrification System HSH Melter Caves 1&2 Design Proposal Drawing Decontamination Tank Assembly*

Refer to: 24590-HLW-M0-HSH-00074, *HLW Vitrification System HSH Design Proposal Drawing Decontamination Tank Pump Support Package*

The decontamination tank provides wet decontamination of equipment prior to hands on maintenance or prior to equipment disposal. The decontamination tank is located within the confines of the equipment decontamination pit and is supported at elevation 0 ft. The decontamination pit provides the necessary secondary containment volume for the tank. The tank is a 6' diameter by approximately 23' tall stainless steel open top tank. The tank structure supports a multi-tier internal spray ring assembly, a lid, an external pump support package and an interior bottom screen assembly. The tank shell is a permanent installation designed for the 40 year facility life but the remaining components are all remotely replaceable. As the tank shell and drain line from the tank to the jumper nozzle are a permanent installation, they are of fully welded construction. The tank shell is equipped with an overflow line that is directed to the sloped floor of the decontamination pit where an ejector equipped sump is

located. The pump support package and spray ring assembly are physically supported by the tank shell to accommodate thermal growth of the tank. The lid is supported by the spray ring assembly. The lid is designed to prevent excessive amounts of vapors and sprays from exiting the tank top opening.

The spray shield assembly is connected to the tank shell and slips between wall mounted guides. It has a gap between the lower edge and the pit floor for air flow. The spray shield assembly serves the following three purposes:

- It prevents unwanted sprays from adjacent spray lance decontamination activities in the pit from entering the space behind the tank
- It reduces the heat loss from the tank by minimizing the air flow past the tank shell from the engineered air flow sweep around the perimeter of the decontamination pit shield lids
- It encourages the engineered air flow to sweep through north side of the pit and under the bottom edge to the opening of the HVAC C5 duct located near the bottom of the EDP

The spray ring assembly is supported from the top tank lip and slides vertically into the tank. It is provided with bump stops to position and align the equipment decontamination templates, MSM decontamination stand and tank lid. It connects to the HLW Plant Wash and Disposal (PWD) system for tank fill, the HLW High Pressure Steam (HPS) system for tank heating and HLW Instrument Service Air (ISA) system for tank sparging. The tank fill connection is physically interrupted with an air gap to preclude any unplanned siphoning or backflow out of the tank into the PWD system. The System HPS steam line connecting to the spray ring assembly is routed inside the crane decontamination area to a minimum height of 34' above the tank overflow level before exiting the CDA. This ensures a steam collapse in the line does not inadvertently draw contamination into an area of lower contamination potential.

The spray ring assembly consists of:

- Six rolled pipe hoop headers (one through six counting from top) with spray nozzles
- Vertical pipes to connect spray headers two to three and four to five
- Stepped ribs that hold the spray headers and rolled pipe headers in place and interfaces with the agitator decontamination template for setting equipment at discrete elevations
- Three flow valves that allow high pressure sprays to be directed from header one, header two and three, or header four and five
- Jumper nozzles to connect the pump support package to the spray ring assembly and systems HPS and ISA to the sixth spray header for tank sparging and heating

The pump support package houses a centrifugal pump and a three way valve. The pump is a synchronous magnetically driven seal-less centrifugal pump capable of handling solid concentrations up to 5% by weight and 150 micron size. Seal-less design provides total containment without any potential leak path. The pump support package connects to the spray ring assembly for delivery of high pressure plant wash media to the various spray headers and to radioactive liquid drains (System RLD) for tank discharge. To allow removal of the pump support package without removing the internal spray ring assembly, the pick points are located near the front of the package, ahead of the center of gravity. To achieve a plumb lift, the counterweight provided with the melter cave central vacuum system must be installed on the pump support package. An out-cave chemical injection drum and drum pump located on the +23 ft platform west of the EDP may be temporarily jumpered to the pump support package to permit chemical injection of various decontamination media. The drum is contained in an industrial

mobile drum containment center. The pump support package housing was deliberately oversized to allow future replacement with an alternate package with expanded capabilities such as a chemical oxidation and reduction decontamination system.

The filter screen assembly is a basket in basket design with an oversize screen in the inner (upper) basket and an under-size screen in the outer (lower) basket. The screen assembly prevents oversized particles from passing through the centrifugal pump and entering the RLD system. The oversize basket is furnished with an 11 gauge perforated stainless steel sheet with 3/8 inch diameter holes and the undersize basket is furnished with a 40 x 40 medium mesh (.015 inch opening) stainless steel wire space cloth reinforced with 1/16 inch x 11 gauge stainless steel wire space cloth. The oversize basket may be removed independently of the undersize basket or both may be removed as a single unit with the overhead power manipulator.

As the decontamination tank operates in a small volume of C5 space within the decontamination pit and is physically located close to the concrete shield walls and equipment, certain limitations and precautions must be observed during steam tank heating operations. These are:

- The steam flow rate into the decontamination tank should be controlled to prevent boiling in the tank. The tank temperature indication may be used to monitor this parameter
- The steam flow into the tank should be stopped when the shield lids over the equipment decontamination pit are open to ensure the engineered air flow path through the EDP and into the melter cave is preserved
- Although not mandatory, operations may invoke specific temperature limitations for the decontamination tank operations based upon measurements of surrounding room surface temperatures using temporary temperature measurement instruments

Figure 4-46 – Decontamination Tank

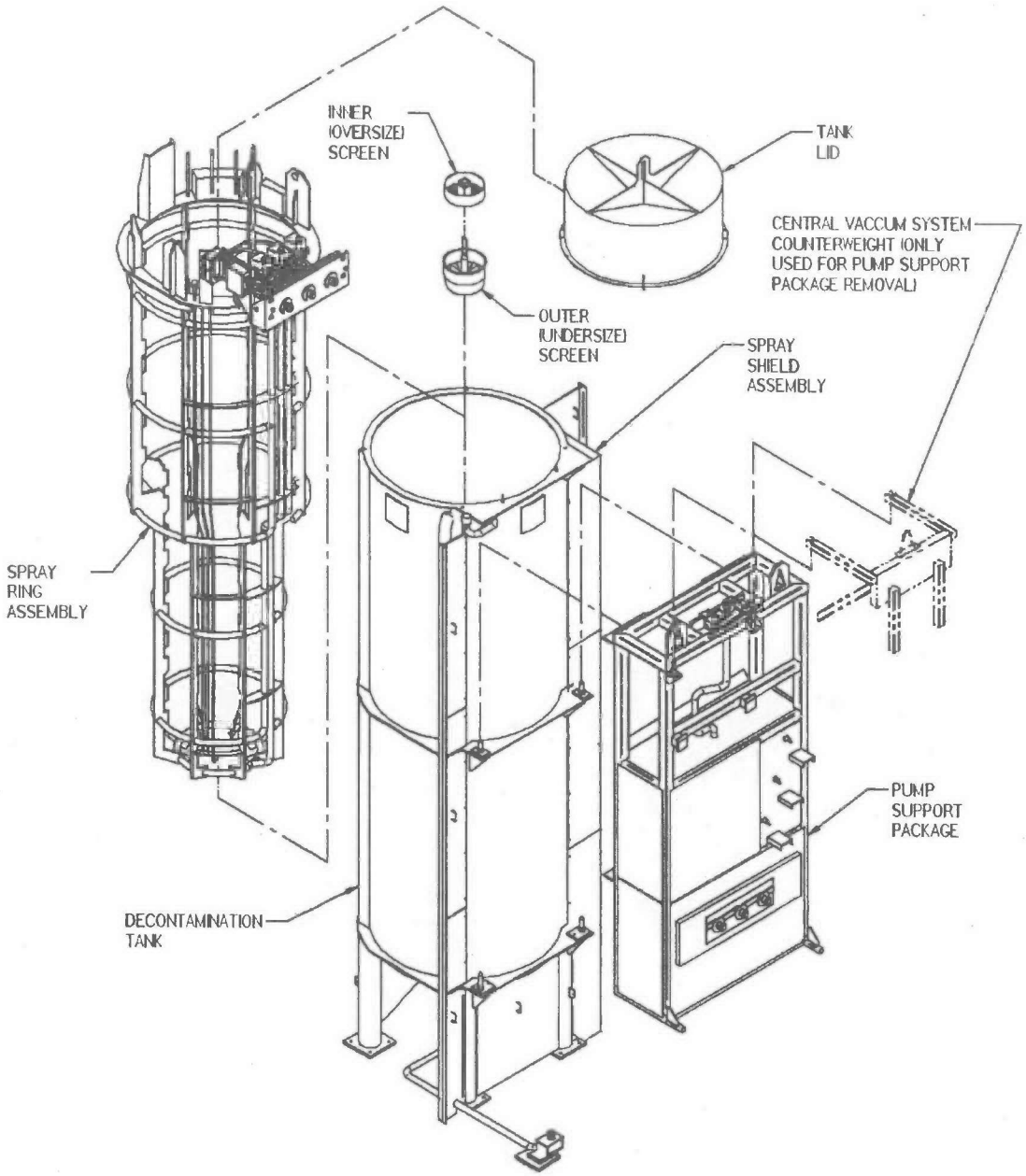

4.1.1.6.7 Decontamination Turntable

Melter Cave 1, 24590-HLW-MH-HSH-MHAN-00018
Melter Cave 2, 24590-HLW-MH-HSH-MHAN-00059

Non-Safety, SC-III

Refer to: 24590-WTP-3PS-MQL0-T0002, *Engineering Specification for Mechanical Handling Custom Designed and Fabricated Equipment*

Refer to: 24590-HLW-M0-HSH-00095001, *HLW Vitrification System HSH Design Proposal Drawing Decon Area Turntable*

The decontamination turntable provides a support platform for remote MSM decontamination activities within the equipment decontamination pit. Specific duties are to: accommodate various equipment geometries, allow equipment to be positioned to face shield windows and MSMs, be remotely operable through MSMs and allow for the equipment stand to be placed into the equipment decontamination pit.

The equipment decontamination turntable is a folding frame that has a slewing ring mounted turntable. The frame is suspended from wall hangers and interfaces directly with the consumable storage bucket, consumable templates, HPM arm cradle and equipment decontamination templates.

The frame folds up and pins into position to allow transport or replacement with the slewing hoist of the power manipulator crane and positioning of the equipment stand into the decontamination pit. The frame may be positioned at any one of three different elevations along the north wall of the equipment decontamination pit to accommodate various lengths of equipment at the shield window operating stations.

The turntable rotates about a vertical axis to allow positioning of equipment for remote spray lancing or swabbing with the MSMs. Once the equipment has been rotated into position, the turntable can be locked into position to prevent free rotation from high pressure spray lancing.

Figure 4-47 – Decontamination Turntable

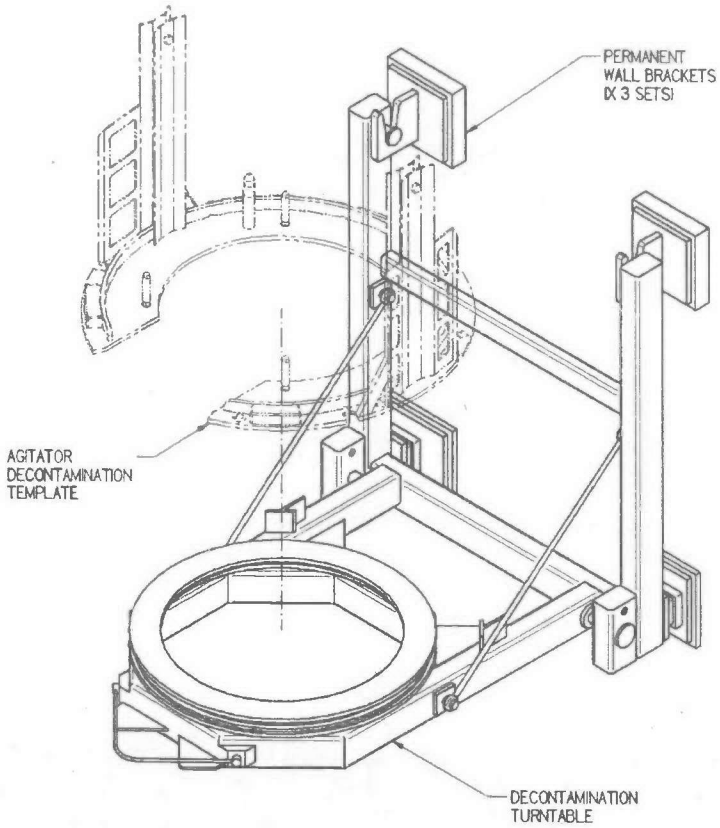

4.1.1.6.8 Decontamination Pit Small Item Shelves

Melter Cave 1, 24590-HLW-MZ-HSH-BENCH-00011 (Upper)
Melter Cave 1, 24590-HLW-MZ-HSH-BENCH-00012 (Lower)
Melter Cave 2, 24590-HLW-MZ-HSH-BENCH-00013 (Upper)
Melter Cave 2, 24590-HLW-MZ-HSH-BENCH-00014 (Lower)

Non-Safety, SC-IV

Refer to: 24590-WTP-3PS-MQL0-T0002, *Engineering Specification for Mechanical Handling Custom Designed and Fabricated Equipment*

Refer to: 24590-HLW-M0-HSH-00079001, *HLW Vitrification System HSH Design Proposal Drawing HSH Decon Area Small Item Shelves General Arrangement*

Decontamination pit shelves provide a storage and work space for tools and equipment to support remote equipment decontamination within the equipment decontamination pit. The shelf is simply a stainless steel formed tray with a lifting bail, remotable attachment points and sections of pipe to dock the spray lances into. The shelf is set into permanent receivers mounted on the west wall of the equipment decontamination pit

underneath the shield windows. Installation and removal of the shelf is performed with the overhead power manipulator.

Figure 4-48 – Decontamination Area Small Item Shelves

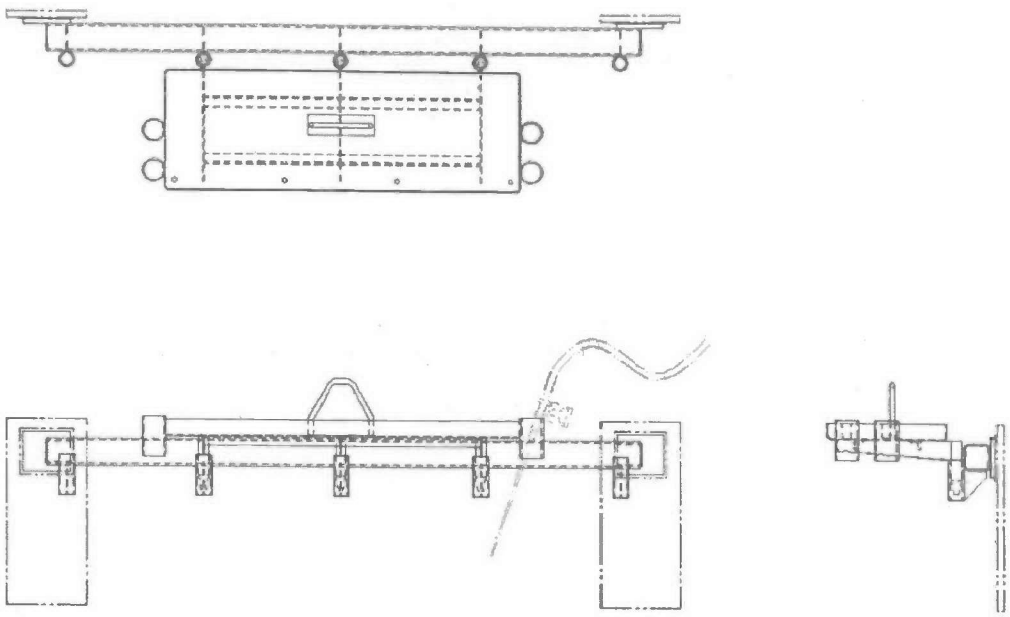

4.1.1.6.9 Parts Washer and Plinths

Melter Cave 1, 24590-HLW-MH-HSH-MHAN-00041 (Parts Washer, SC-V)
Melter Cave 1, 24590-HLW-MH-HSH-MHAN-00116 (Parts Washer Plinths, SC-III)
Melter Cave 2, 24590-HLW-MH-HSH-MHAN-00057 (Parts Washer, SC-V)
Melter Cave 2, 24590-HLW-MH-HSH-MHAN-00117 (Parts Washer Plinths, SC-III)

Non-Safety, SC noted above

Refer to: 24590-WTP-3PS-HD00-T0001, *Engineering Specification for Maintenance Decontamination Equipment* for Parts Washers and 24590-WTP-3PS-MQL0-T0002, *Engineering Specification for Mechanical Handling Custom Designed and Fabricated Equipment* for Plinths

The parts washer is a small, fully enclosed, manually or remotely loaded and operated decontamination package. It is located on the elevation +23 ft floor in the crane decontamination area. It holds approximately 250 gallons of fluid. The parts washer has a removable basket that is designed to be remotely loaded and unloaded with the overhead power manipulator crane or by manual operation. It provides decontamination capabilities for equipment or components as large as 16 inches wide by 16 inches tall by 34 inches long and as heavy as 1000 lbs. The parts washer is a modified commercially available JenFab Cell Star II industrial washer featuring immersion, recirculation, sprays, heating and mechanical agitation of the basket via a pneumatic cylinder raising and lowering the basket in the tank. The tank lids must be opened prior to raising the basket to the "load position". Likewise, the lids must be closed prior to starting an automatic wash cycle. The parts washer interfaces with System PWD for decontamination media supply, System ISA for pneumatic cylinder air supply and System RLD for controlled liquid drain to the decontamination tank. The parts washer drain line interface with the decontamination tank

features a slip fitting with an air gap to allow thermal growth of the tank without straining the drain line and to preclude any potential for siphoning or backflow from the tank. The parts washer is equipped with a chemical metering pump and conductivity control to allow alternate decontamination media to be introduced. Utilization of this feature would require the chemical drum to be situated adjacent to the parts washer in the CDA so that the suction hose of the chemical metering pump could be placed in the drum. However, spare wall / floor penetrations are in place, so that a chemical injection line can be installed from the out-cave decontamination tank chemical drum to the parts washer.

Figure 4-49 – Parts Washer

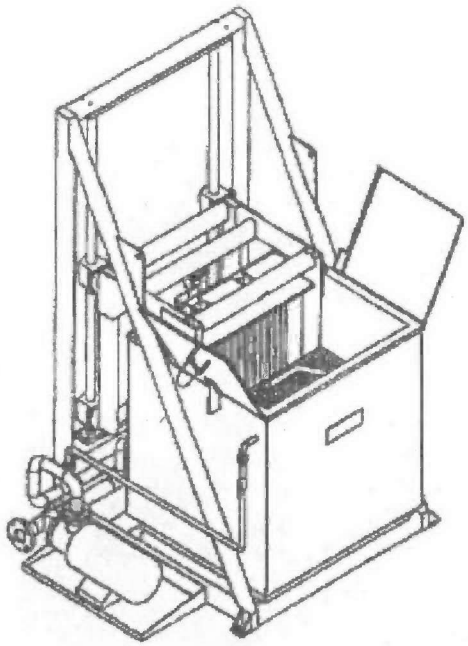

4.1.1.6.10 Crane Decontamination System

Melter Cave 1, 24590-HLW-MH-HSH-MHAN-00011
Melter Cave 2, 24590-HLW-MH-HSH-MHAN-00055

Non-Safety, SC-V

Refer to: 24590-WTP-3PS-HD00-T0001, *Engineering Specification for Maintenance Decontamination Equipment*

Refer to: 24590-HLW-M0-HSH-00078, *HLW Vitrification System HSH Design Proposal Drawing Crane Decontamination System*

A remote crane decontamination system is provided for spray lance decontamination of the main 25 ton crane, the power manipulator crane or any other SSC within the crane decontamination area. The crane decontamination system is comprised of three main parts. A spray wand assembly consisting of two adjustable spray lances

mounted on a reaction block with a crane bail, a water hose reel with remote connectors and an air (CO_2) hose reel with remote connectors. The spray wand assembly is designed to hang from the overhead decontamination area crane and spray either high pressure water and steam, or CO_2 pellets. The 750 lb reaction block provides stability to the hanging payload to counteract the discharge thrust from the wands.

Each hose reel is equipped with 50 ft of supply hose and 75 ft of delivery hose on the reel. The 50 ft supply hose is connected through a wall decontamination joggle shield plug to either the out cave pressure washing supply system for water and steam decontamination or the out cave mobile CO_2 decontamination blast unit for CO_2 pellet decontamination. The delivery hose is connected to either the water spray wand or the CO_2 blast nozzle on the spray wand assembly. Remote connections and spray lance angle adjustments are made with the overhead power manipulator. The water and steam hose reel is a conventional spring rewind live hose reel. The CO_2 hose reel is not a live hose reel due to the limitations on bend radius for CO_2 pellet passage. As such, the CO_2 hose is not connected through the hose reel. As such, it may be more convenient to hang this hose for storage in the CDA instead of winding it onto the supplied hose reel.

The decontamination area crane picks the spray lance assembly and is used to perform remote wash down of exterior surfaces. Control of the decontamination media supply is from operation of the out cave pressure washing supply system or mobile CO_2 blast unit. The water hose reel may also be used to connect the overhead power manipulator mast wash down system to the plant wash system (System PWD) directly through a decontamination joggle shield plug.

Figure 4-50 – Crane Decontamination Equipment

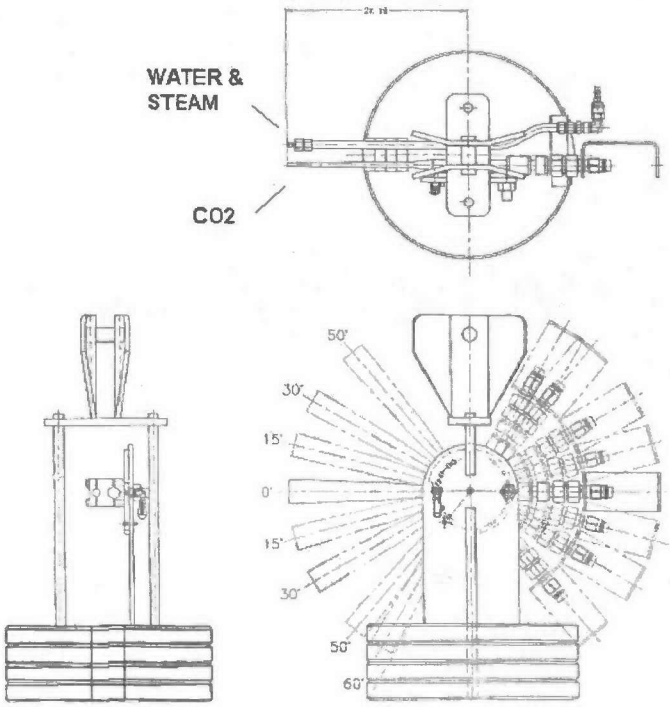

4.1.1.6.11 Manual H_2O Spray Lances and Hose Hangers

Melter Cave 1, 24590-HLW-FH-HSH-TOOL-00018, 00027, 00028 Manual H_2O Spray Lances

Melter Cave 2, 24590-HLW-FH-HSH-TOOL-00039, 00042, 00043 Manual H_2O Spray Lances
Melter Cave 1, 24590-HLW-PH-HSH-H-00007, 00008, 00009 Manual H_2O Spray Lance Hose Hangers
Melter Cave 2, 24590-HLW-PH-HSH-H-00010, 00011, 00012 Manual H_2O Spray Lance Hose Hangers

Non-Safety, SC-V

Refer to: 24590-WTP-3PS-HD00-T0001, *Engineering Specification for Maintenance Decontamination Equipment* for Spray Lances and 24590-WTP-IID-MH-10-001, *Internal Interface Document for In-Cave Tools* for hose hangers

Manual spray lances are provided for manual area and equipment decontamination. The manual spray lances are supplied with demineralized water, steam and water or chemicals from the out-cave pressure washing supply system through a dedicated decontamination joggle shield plug. Manual lances and joggle plugs are provided at elevation +23 ft in the CMA and CDA and at elevation +58 ft in the CMA. The elevation +58 ft lance is equipped with enough hose to allow manual crane decontamination from the platforms in the CDA. Industrial hose hangers are provided near the in-cave side of the joggle plug for hose storage. The supply hoses are provided with quick connectors for ease of replacement.

Figure 4-51 – Decontamination Spray Lance

4.1.1.6.12 Manual CO_2 Spray Lances and Hose Hangers

Melter Cave 1, 24590-HLW-FH-HSH-TOOL-00029 Manual CO_2 Spray Lance
Melter Cave 2, 24590-HLW-FH-HSH-TOOL-00044 Manual CO_2 Spray Lance
Melter Cave 1, 24590-HLW-PH-HSH-H-00001 Manual CO_2 Spray Lance Hose Hanger
Melter Cave 2, 24590-HLW-PH-HSH-H-00002 Manual CO_2 Spray Lance Hose Hanger

Non-Safety, SC-V

Refer to: 24590-WTP-3PS-HD00-T0001, *Engineering Specification for Maintenance Decontamination Equipment* for Spray Lances and 24590-WTP-IID-MH-10-001, *Internal Interface Document for In-Cave Tools* for hose hangers

Manual CO_2 Spray Lances are provided for manual equipment decontamination. The manual CO_2 spray lances are supplied with CO_2 pellets from the out-cave mobile CO_2 decontamination blast unit through a dedicated decontamination joggle shield plug. A manual lance and joggle plug is provided at elevation +58 ft in the CMA. The elevation +58 ft lance is equipped with enough hose to allow manual CO_2 crane decontamination in the CDA. Industrial hose hangers are provided near the in-cave side of the joggle plug for hose storage. The supply hoses are provided with quick connectors for ease of replacement.

4.1.1.6.13 Remote H_2O Spray Lances and Hose Hangers

Melter Cave 1, 24590-HLW-FH-HSH-TOOL-00020, 00023, 00031 Remote H_2O Spray Lances

Melter Cave 2, 24590-HLW-FH-HSH-TOOL-00040, 00041, 00046 Remote H_2O Spray Lances
Melter Cave 1, 24590-HLW-PH-HSH-H-00013, 00014, 00015 Manual H_2O Spray Lance Hose Hangers
Melter Cave 2, 24590-HLW-PH-HSH-H-00016, 00017, 00018 Manual H_2O Spray Lance Hose Hangers

Non-Safety, SC-V

Refer to: 24590-WTP-3PS-HD00-T0001, *Engineering Specification for Maintenance Decontamination Equipment* for Spray Lances and 24590-WTP-IID-MH-10-001, *Internal Interface Document for In-Cave Tools* for hose hangers

Remote spray lances are similar to their manual counterparts except that they may be remotely operated with a MSM or power manipulator. Remote spray lances and decontamination joggle shield plugs are provided at the upper and lower shield window locations within the equipment decontamination pit and in the melter cave at the tool storage table shield window. All remote lances are capable of being passed through the 10 ½ in. liner or imported with the crane mounted power manipulator. The supply hoses are provided with remotely operable quick connectors for ease of replacement. An industrial spring rewind live hose reel modified for remote operation is provided on the in-cave side near the decontamination joggle shield plugs.

4.1.1.6.14 Remote CO_2 Spray Lances and Hose Hangers

Melter Cave 1, 24590-HLW-FH-HSH-TOOL-00022, 00030 Remote CO_2 Spray Lance
Melter Cave 2, 24590-HLW-FH-HSH-TOOL-00045, 00048 Remote CO_2 Spray Lance
Melter Cave 1, 24590-HLW-PH-HSH-H-00003, 00004 Remote CO_2 Spray Lance Hose Hanger
Melter Cave 2, 24590-HLW-PH-HSH-H-00005, 00006 Remote CO_2 Spray Lance Hose Hanger

Non-Safety, SC-V

Refer to: 24590-WTP-3PS-HD00-T0001, *Engineering Specification for Maintenance Decontamination Equipment* for Spray Lances and 24590-WTP-IID-MH-10-001, *Internal Interface Document for In-Cave Tools* for hose hangers

Remote CO_2 spray lances are similar to their manual counterparts except that they may be remotely operated with a MSM or power manipulator. Remote CO_2 spray lances and joggle plugs are provided at the lower shield window location within the equipment decontamination pit and in the melter cave at the tool table shield window. Again, they may be passed through the liner or imported. The supply hoses are provided with remotely operable quick connectors for ease of replacement. Simple hangers are provided on the in-cave side near the decontamination joggle shield plugs for draping the CO_2 hose onto as the CO_2 pellets cannot be passed through any sharp bends. During use, the CO_2 hose must be routed to avoid kinks and sharp bends.

4.1.1.7 Size Reduction and Related Equipment

4.1.1.7.1 Fixed Shear

Melter Cave 1, 24590-HLW-FH-HSH-TOOL-00013
Melter Cave 2, 24590-HLW-FH-HSH-TOOL-00057

Non-Safety, SC-IV

Refer to 24590-WTP-IID-MH-10-001, *Internal Interface Document for In-Cave Tools*

The fixed hydraulic shear is the primary size reduction tool for melter consumables and small bore flexible jumpers. Melter consumables require periodic change-out on a frequency ranging from 3 months to several years, depending upon the specific item. The shears are hydraulically powered by the out-cave hydraulic power unit and locally controlled from an out-cave hydraulic control panel. Jumpers with remotely operable double shut off quick connections, integral orifices and out-cave velocity fuses minimize cross contamination and protect against hose failures. The hydraulic and instrument jumpers are routed through wall joggles that slope downward to the in-cave side.

The shear consists of the out-cave control panel, and in-cave mounting bracket, translating frame, clamp cylinder and shear cylinder equipped with a guided blade. The shear frame translates to a position in front of the shield window for operator viewing through the local shield window. With the exception of the permanent mounting bracket, the entire shear frame is remotely replaceable.

Consumables are lowered into the shear by the overhead crane, clamped, cut, then retrieved and loaded into a solid waste basket. The clamp cylinder holds the cut segment in place until it can be gripped with an MSM or HPM. Alternatively, a collection pan could be placed underneath the shear and the cut portion is allowed to drop into the collection pan upon clamp cylinder release.

The shear is predominately of stainless steel construction to allow aggressive decontamination for maintenance. The main structural frame is designed for the 40 year plant life. Cylinders and hoses are specified for a 10 year design life and shear blades are replaced as necessary. Some remote in-situ maintenance, such as blade replacement, is possible. Both cylinder rods are bellows protected to minimize the possibility of contamination entering the hydraulic system.

Figure 4-52 – Fixed Shear

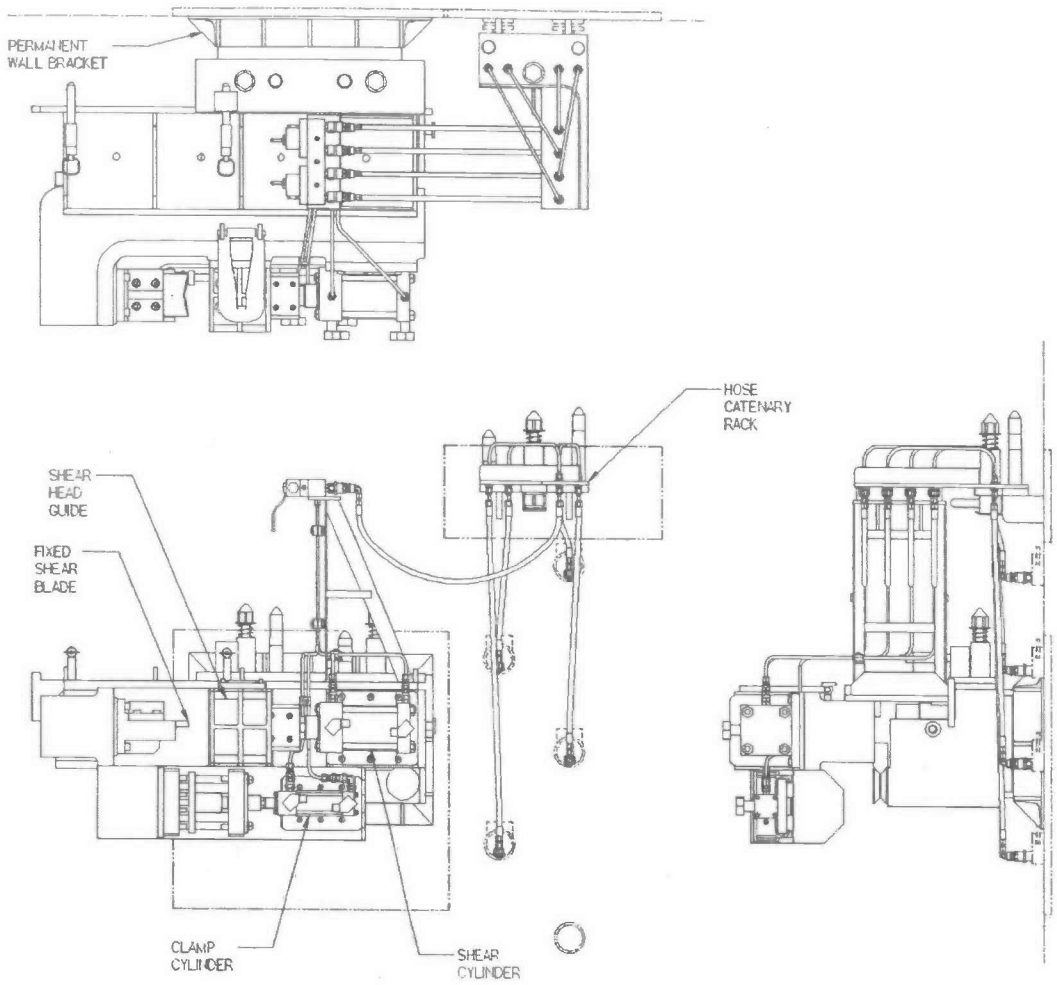

4.1.1.7.2 WTP Solid Waste Basket

WTP, 24590-WTP-MH-30-MHAN-00020

Non-Safety, SC-V

Refer to: 24590-WTP-3PS-HCYT-T0002, *Engineering Specification for HLW and PTF Solid Waste, Filter and Decontamination Baskets*

The solid waste basket is used to export radioactive solid waste from the melter cave through the waste transfer port to the System RWH drum transfer bogie. It is designed for remote handling and has a locking lid for contamination control and hoisting purposes. The basket is 19 inches in diameter by 32 inches high to allow fitting inside of a standard DOT Specification 7A 55 gallon drum. It has a payload capacity of 1000 lbs. Rotating the lid 90° clockwise / counterclockwise, as viewed from above, will lock / unlock the lid. The 1 ton hook

adapter is specifically designed to interface with the lift point on the lid and lower (or raise) the basket through the waste transfer port. The lid features manipulator grab points for handling.

Figure 4-53 – Solid Waste Basket

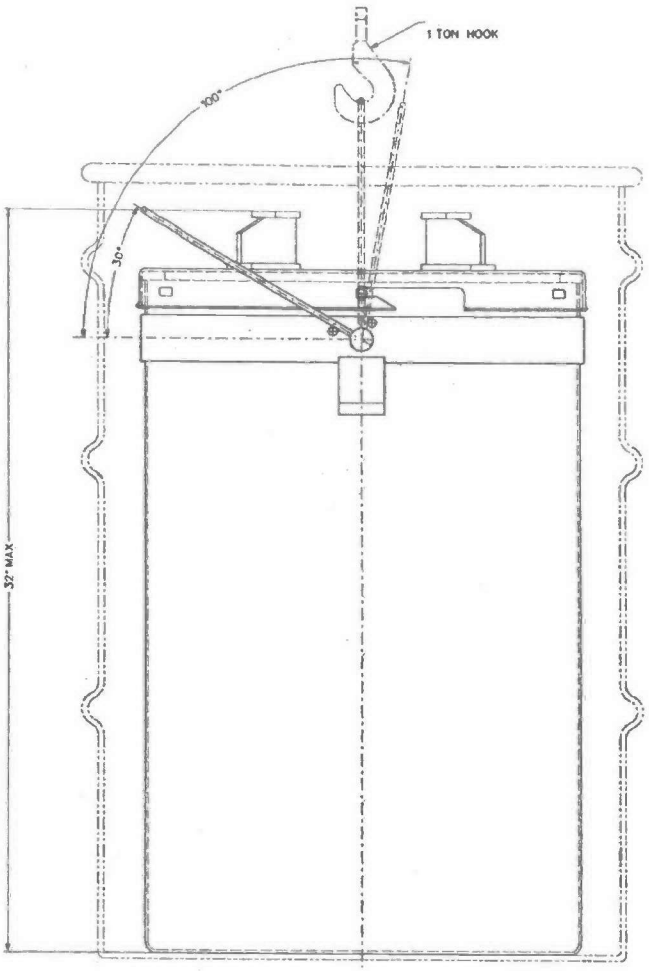

4.1.1.7.3 Waste Basket Stand

Melter Cave 1, 24590-HLW-MH-HSH-MHAN-00093
Melter Cave 2, 24590-HLW-MH-HSH-MHAN-00094

Non-Safety, SC-III

Refer to: 24590-WTP-3PS-MQL0-T0002, *Engineering Specification for Mechanical Handling Custom Designed and Fabricated Equipment*

Refer to: 24590-HLW-M0-HSH-00103001, *HLW Vitrification System HSH Design Proposal Drawing Waste Basket Stand Details*

The waste basket stand provides for segregation of transuranic (TRU) and non-TRU waste within the melter cave. TRU waste may originate from melter consumables that have been in direct contact with the liquid glass. The waste basket stand allows a higher packing factor to be achieved in the solids waste baskets due to the ease of basket loading and viewing. The stand consists of two side by side waste basket receivers mounted on a common shaft attached to a base plate. The receiver and waste baskets are tipped through a 30° angle to allow size reduced melter consumables to be sorted and loaded via the sorting table hydraulic power manipulator. The waste basket receivers guide and hold the solid waste baskets in place. A handle allows the receiver and baskets to be tilted upright with the HPM with the baskets fully loaded. The base plate has lifting beam trunnions to allow repositioning of the assembly. The base plate is equipped with remote dowels and bolts to allow bolting the stand to an alleyway false floor panel in front of the melter cave waste sorting area along the east wall.

Figure 4-54 – Waste Basket Stand

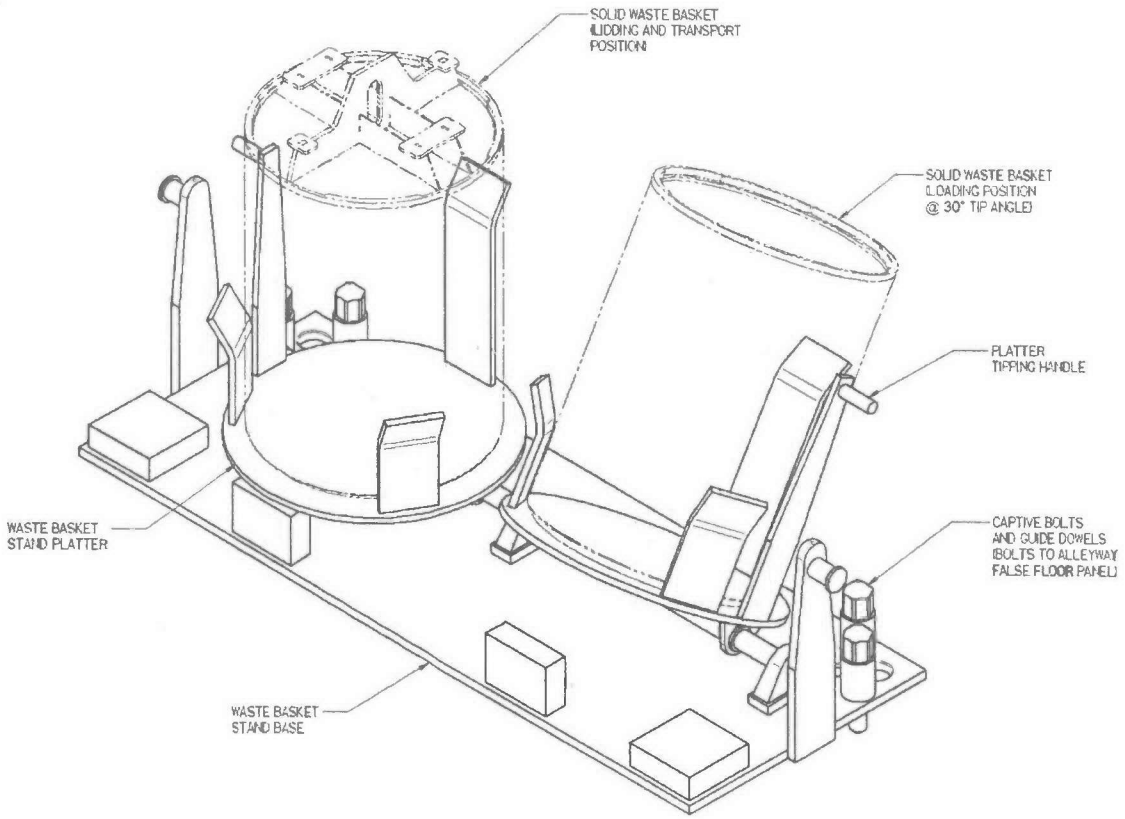

4.1.1.7.4 Breakdown Table and Clamps

Melter Cave 1, 24590-HLW-MZ-HSH-BENCH-00003 (Breakdown Table)
Melter Cave 1, 24590-HLW-FH-HSH-TOOL-00017 (Breakdown Table Clamps)
Melter Cave 2, 24590-HLW-MZ-HSH-BENCH-00008 (Breakdown Table)
Melter Cave 2, 24590-HLW-FH-HSH-TOOL-00059 (Breakdown Table Clamps)

Non-Safety, SC-III

Refer to: 24590-WTP-IID-MH-10-001, *Internal Interface Document for In-Cave Tools*

The breakdown table is a robust and remotely replaceable work surface that physically supports spent or failed melter cave equipment and size reduction equipment. The table has an overall footprint of 20 ft long by 11 ft wide to accommodate larger melter cave equipment including the main melter offgas jumpers, pour spouts or discharge chamber lids. The breakdown table also serves as a set down and maintenance area for the central vacuum system skid to allow access to the upper vacuum skid equipment with the breakdown area HPM. The breakdown table is equipped with stainless steel industrial grate sections contained within swarf pans to hold debris generated by size reduction activities. The swarf pans limit the spread of debris to other areas of the melter cave and may be vacuumed out after lifting the appropriate grate section.

To allow remote replacement, the table is split into smaller sub-assemblies that fit together to form the work surface. The breakdown table sub-assemblies are; four plinth mounted sub-frames, three closed bottom swarf trays with grating, one downdraft swarf tray with grating, a downdraft chute, downdraft plug and a circular grating section for the downdraft inlet.

The sub-frames mount to the permanent floor plinths and provide structural support to the breakdown table assembly. The swarf trays rest on the sub-frames and support the grating. The trays serve to capture debris generated during size reduction activities and provide a physical barrier for the System HOP off-gas piping running below the breakdown table.

The downdraft tray is similar to the swarf trays except that a portion of the tray bottom is open for a formed chute to pass through. The chute connects to the central vacuum system header positioned below the breakdown table through a high temperature gasketed joint. The chute is normally closed with a plug installed from above. When the plug is removed and the central vacuum system is running, a downdraft air flow is created through the circular grating section of the tabletop to capture fumes or dust generated from size reduction operations. The specific operation must be conducted over-top of the downdraft chute for effective capture.

The grated table top is a sacrificial work surface used to perform size reduction operations on. As it does provide the attachment point for the breakdown table clamps and the size reduction equipment it is designed to be replaced independently of the sub-frames.

The breakdown table clamps provide support to the work piece during cutting operations. The underside of the clamps is equipped with a remotely operable latch that slips between and locks to the underside of two adjacent grate bars. The topside of the clamps has a swivel plate, a V-block and a chain style vise to allow clamping irregularly shaped geometry.

Figure 4-55 – Breakdown Table

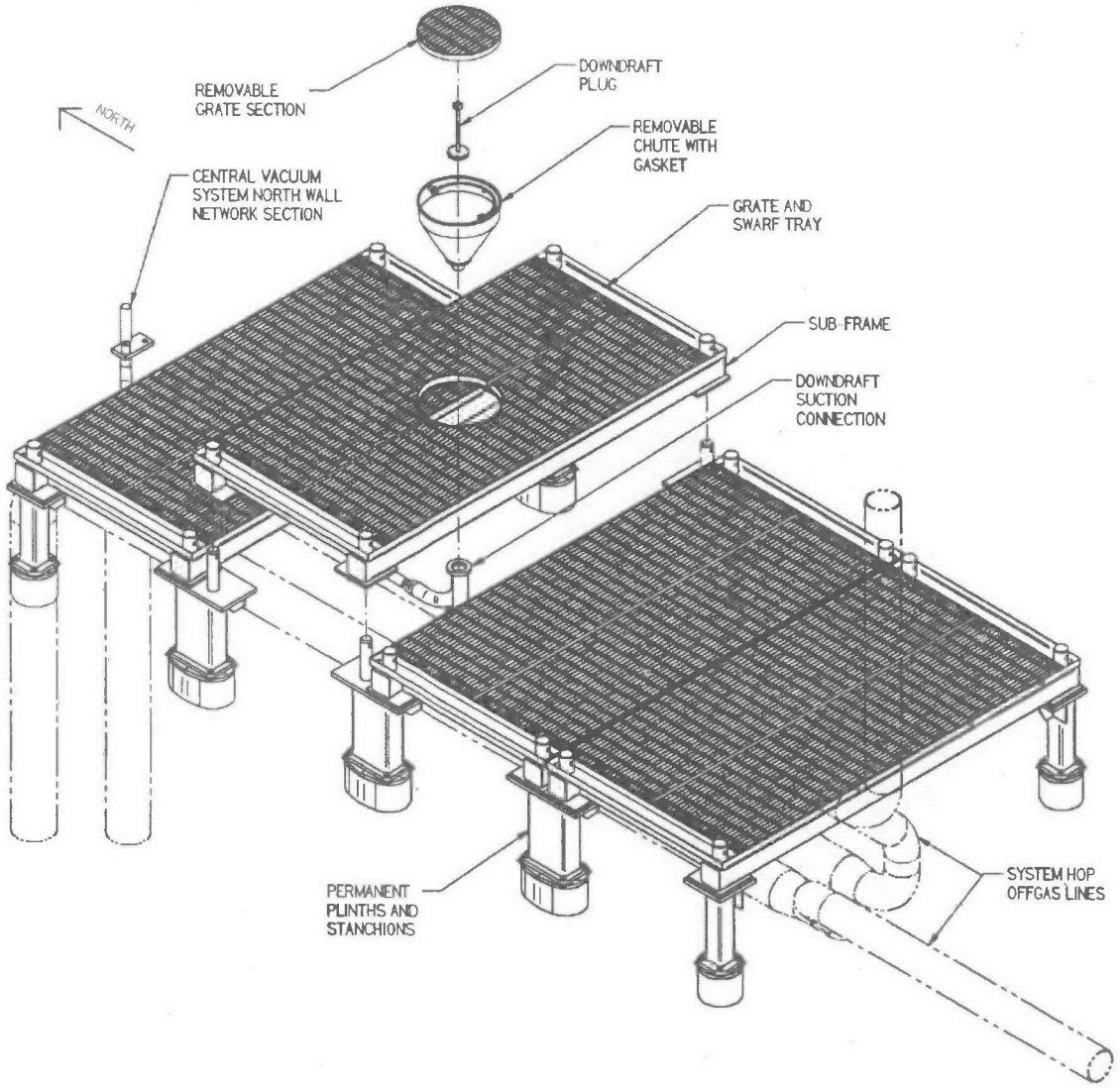

4.1.1.7.5 Size Reduction System

Melter Cave 1, 24590-HLW-FH-HSH-TOOL-00009
Melter Cave 2, 24590-HLW-FH-HSH-TOOL-00056

Non-Safety, SC-V

Refer to 24590-WTP-IID-MH-10-001, *Internal Interface Document for In-Cave Tools*

The size reduction system is located on the breakdown table and is used to size reduce large melter consumables, rigid jumpers, and process and mechanical handling equipment. Additional information is contained in 24590-WTP-IID-MH-10-001, *Internal Interface Document for In-Cave Tools*.

4.1.1.7.6 Plasma Torch

Melter Cave 1, 24590-HLW-MH-HSH-MHAN-00031
Melter Cave 2, 24590-HLW-MH-HSH-MHAN-00078

Non-Safety, SC-V

Refer to 24590-WTP-IID-MH-10-001, *Internal Interface Document for In-Cave Tools*

The plasma torch assists in size reduction of any size or geometry of equipment on the breakdown table. Future outfitting of a longer cable would allow removal of the melter lid using the crane mounted power manipulator to guide the torch along the pre-defined lid cut path.

The plasma torch is a commercially available plasma cutting unit and torch head. The control unit is located out-cave for ease of maintenance and the plasma torch head and cable are passed though the plasma torch pass through port. The torch head and cable are connected to the control unit through quick connectors.

A custom grip for the torch head is provided that allows MSM manipulation of the torch. The torch head is equipped with a drag tip for ease of remote operation. The torch head comes preassembled with the cable. Once the tip electrode is burnt out, the entire cable and torch head may be economically replaced.

4.1.1.8 Crane and Manipulator Deployed Equipment

The crane deployed tools are designed for remote deployment with either the overhead 25 ton crane, the slewing hoist on the overhead power manipulator crane or the overhead decontamination area crane. They are electrically powered and controlled, as required, from the tool power socket on the lower hook block via a MSM operable electrical quick connect. The manipulator deployed tools are designed for remote deployment with the overhead power manipulator, hydraulic power manipulator or an MSM. They are electrically powered and controlled, as required, from the tool power socket on the telescopic mast or HPM wrist. MSM operated tools require an out-cave power source to be provided through a joggle penetration. For simplicity and cost effectiveness, these tools are generally commercially available tools that have been modified for remote operation. Aside from reconfiguration or replacement of the tool attachments (i.e. sockets, grinding blades, etc.), little, if any, maintenance provisions are included in the design. They are generally run to failure, decontaminated for disposal only and replaced. Certain tools are provided with stands to allow remote reconfiguration and storage of the attachments. The stands are of stainless steel construction and are designed for the 40 year life of the facility.

4.1.1.8.1 Crane Deployed Large Impact Wrench and Stand

Melter Cave 1, 24590-HLW-FH-HSH-TOOL-00002 (Large Impact Wrench)
Melter Cave 2, 24590-HLW-FH-HSH-TOOL-00050 (Large Impact Wrench)
Melter Cave 1, 24590-HLW-MH-HSH-MHAN-00002 (Impact Wrench Stand)
Melter Cave 2, 24590-HLW-MH-HSH-MHAN-00061 (Impact Wrench Stand)

Non-Safety, SC-V

Refer to 24590-WTP-IID-MH-10-001, *Internal Interface Document for In-Cave Tools*

Refer to: 24590-WTP-MU-M24B-00002001, *WTP Large Impact Wrench (Crane Deployed) Assembly*

Refer to: 24590-WTP-MU-M24B-00003001, *WTP Large Impact Wrench (Crane Deployed) Stand Assembly*

The crane deployed large impact wrench is used for remote fastener operations in the melter cave and crane decontamination area. The impact wrench can be used with the overhead crane, the slewing hoist on the power manipulator crane or hung from the power manipulator arm. The wrench is electrically powered from an outlet on the crane hook block or power manipulator arm. It is equipped with a storage and transport stand that allows the wrench to be picked in the horizontal or vertical orientation and the wrench to be reconfigured with different attachments. The stand is equipped with a series of remote studs and pockets that allow re-greasing and storage of remote fasteners as they are removed. A set of different length sockets and spike bars and a counterbalance weight are provided to allow longer reaches to be obtained. It can make up fasteners up to 400 ft-lbs and break out fasteners up to 800 ft-lbs. The spike bar interfaces with a stop on the operated equipment that acts as a torque arm to the impact wrench. The impact wrench assembly is comprised of an outer custom body and an internal commercial impact wrench. The body is designed for re-use if the internal impact wrench fails. The wrench assembly may be imported into the glovebox for swap out or re-greasing of the internal impact wrench. The body is designed for the 40 year facility life but the commercial internals are essentially run to failure.

Figure 4-56 – Large Impact Wrench and Stand

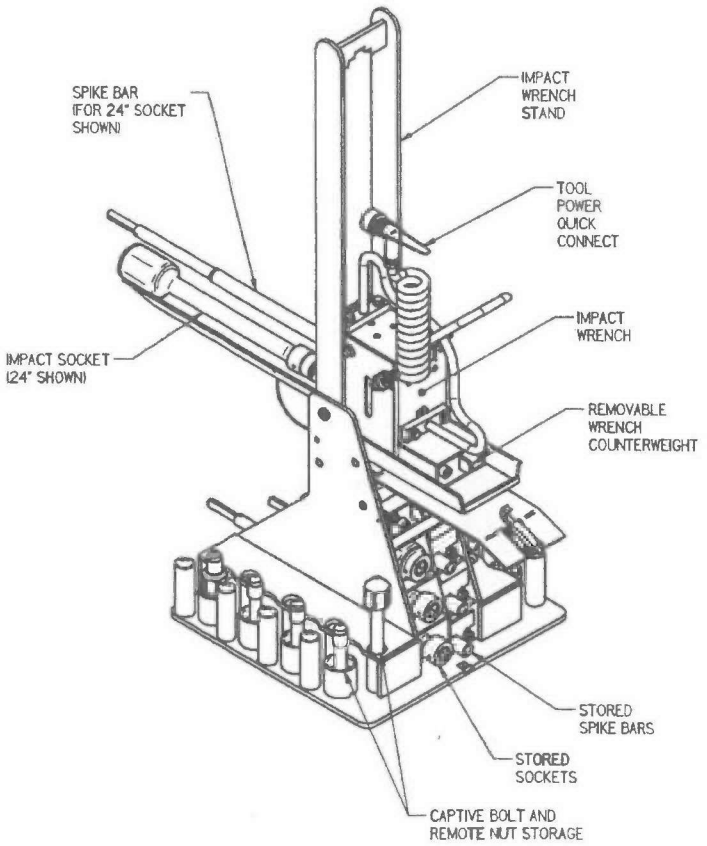

4.1.1.8.2 Power Manipulator Deployed Impact Wrenches and Stand

Power Manipulator Deployed Impact Wrench Small, Medium, Large

Melter Cave 1, 24590-HLW-FH-HSH-TOOL-00007, 00064, 00008
Melter Cave 2, 24590-HLW-FH-HSH-TOOL-00054, 00065, 00055

Power Manipulator Deployed Large Impact Wrench Stand
Melter Cave 1, 24590-HLW-MH-HSH-MHAN-00046
Melter Cave 2, 24590-HLW-MH-HSH-MHAN-00071

Non-Safety, SC-V

Refer to 24590-WTP-IID-MH-10-001, *Internal Interface Document for In-Cave Tools*

The power manipulator deployed impact wrenches are used for lighter duty remote fastener operations in the melter cave and crane decontamination area. As electrically operated impact wrenches cannot be effectively torque controlled, three different capacity impact wrenches provide a torque range suitable for all remote fasteners within the melter cave up to and including the 2 inches across flats standard remote fastener. The power manipulator deployed impact wrenches may be used with either the through wall hydraulic or overhead crane mounted power manipulator. The wrenches are electrically powered from a tool power outlet on the power manipulator. An electrical pigtail adapter is required for use with the hydraulic power manipulators as the actual tool power socket is different from the overhead power manipulator but the wiring is identical. Make up torque and breakout torque are nominally; small = 100 ft-lbs, medium = 230 ft-lbs and large = 400 ft-lbs. As the large PM deployed impact wrench can be used in place of the crane deployed impact wrench, a purpose built stand is provided to allow reconfiguration with MSMs at a shield window station. The small and medium PM deployed impact wrenches are suitable for operation with MSMs.

4.1.1.8.3 Power Manipulator Deployed Nut Runner and Stand

Melter Cave 1, 24590-HLW-FH-HSH-TOOL-00062 (Nut Runner)
Melter Cave 1, 24590-HLW-MH-HSH-MHAN-00004 (Stand)
Melter Cave 2, 24590-HLW-FH-HSH-TOOL-00063 (Nut Runner)
Melter Cave 2, 24590-HLW-MH-HSH-MHAN-00062 (Stand)

Non-Safety, SC-V

Refer to 24590-WTP-IID-MH-10-001, *Internal Interface Document for In-Cave Tools*

The power manipulator deployed nut runner is used to operate low torque, high travel remote nuts in the melter cave. The nut runner is equipped with a set of marked mechanical torque limiters to provide controlled torque of remote nuts for different applications. The nut runner is used with the through wall hydraulic or overhead crane mounted power manipulator. The nut runner is electrically powered from a tool power outlet on the power manipulator. An electrical pigtail adapter is required for use with the hydraulic power manipulators as the actual tool power socket is different from the overhead power manipulator but the wiring is identical. The full torque output of the nut runner is nominally 35 ft-lbs. Torque limiters with nominal set points of 10 ft-lbs, 20 ft-lbs and 30 ft-lbs are provided. As the nut runners require different sockets and torque limiters to be attached, a purpose built stand is provided to allow reconfiguration with MSMs at a shield window station. The PM deployed nut runner is used in conjunction with the Grayloc wrench for remote operation of the Grayloc connectors. The PM deployed nut runner is suitable for operation with an MSM but only when a spike bar equipped attachment and a suitable reaction point to engage the spike bar is provided as the output torque of the nut runner exceeds the 25 ft-lb wrist azimuth joint rating of the MSM.

4.1.1.8.4 Grayloc Wrench, Size 4

Melter Cave 1, 24590-HLW-FH-HSH-TOOL-00081
Melter Cave 2, 24590-HLW-FH-HSH-TOOL-00082

Non-Safety, SC-V

Refer to 24590-WTP-IID-MH-10-001, *Internal Interface Document for In-Cave Tools*

The Grayloc wrench size 4 is a mechanical assembly consisting of a torque limiter, torque multiplier and a reaction arm. The assembly is driven by the PM deployed nut runner and is used to tighten and loosen Grayloc remote process clamp connectors. As the Grayloc clamp connectors have different torque ratings for tightening (make) and loosening (break), a torque limiter with different clockwise and counterclockwise setpoints is provided. To achieve the high torques necessary to make and break a connection, a torque multiplier is also required. As the final output torque far exceeds the power manipulator wrist rotate clutch rating, a reaction spike bar is provided on the assembly that must be engaged in the purpose built receiver of the Grayloc connector. The Grayloc wrench is connected to and operated with the PM deployed nut runner. A purpose built stand is provided to allow configuration of the PM deployed nut runner with the Grayloc wrench assembly with MSMs at a shield window station.

4.1.1.8.5 Power Manipulator Deployed Disc Grinder

Melter Cave 1, 24590-HLW-FH-HSH-TOOL-00005
Melter Cave 2, 24590-HLW-FH-HSH-TOOL-00053

Non-Safety, SC-V

Refer to 24590-WTP-IID-MH-10-001, *Internal Interface Document for In-Cave Tools*

The power manipulator deployed disc grinder is used for size reduction activities such as HEME filter candle separation, melter bus cable removal, or recovery operations. The disc grinder is used with the through wall hydraulic or overhead crane mounted power manipulator. The disc grinder is electrically powered from a tool power outlet on the power manipulator. An electrical pigtail adapter is required for use with the hydraulic power manipulators as the actual tool power socket is different from the overhead power manipulator but the wiring is identical. To maintain constant pressure on the grinding wheel, the manipulator grip is equipped with a constant force spring stack. The disc grinder is equipped with a shroud to allow connection to a vacuum hose for contamination control at the point of generation. The grinding wheel is designed for remote replacement with MSMs at a shield window station.

4.1.1.8.6 Portable Hydraulic Shears

Melter Cave 1, 24590-HLW-FH-HSH-TOOL-00014
Melter Cave 2, 24590-HLW-FH-HSH-TOOL-00058

Non Safety, SC-V

Refer to 24590-WTP-IID-MH-10-001, *Internal Interface Document for In-Cave Tools*

The portable hydraulic shears may be used for size reduction or recovery operations. The shears may be deployed and operated with the through wall hydraulic or overhead crane mounted power manipulator. The shears are hydraulically operated and will be supplied with pressurized fluid from the out-cave hydraulic power unit through

the hydraulic hose reel assembly. The shears have a capacity of cutting a 4 inch Schedule 40S pipe. This capacity allows the shears to size-reduce all small bore jumpers and associated dunnage.

4.1.1.8.7 Hydraulic Hose Reel

Melter Cave 1, 24590-HLW-MH-HSH-RCVY-00004
Melter Cave 2, 24590-HLW-MH-HSH-RCVY-00017

Non-Safety, SC-V

Refer to 24590-WTP-IID-MH-10-001, *Internal Interface Document for In-Cave Tools*

The hydraulic hose reel is a modified commercially available hose reel that conveys pressurized hydraulic fluid from the out-cave hydraulic power unit to in-cave portable hydraulic tools. It is equipped with a lifting bail and remote manipulator connections for transport and set up in cave. It is connected through joggle penetrations that slope downward into the cave at the local hydraulic racks out-cave of the west melter cave wall.

4.1.1.8.8 Power Manipulator Gripper Extension

Melter Cave 1, 24590-HLW-FH-HSH-TOOL-00016
Melter Cave 2, 24590-HLW-FH-HSH-TOOL-00038

Non-Safety, SC-V

Refer to 24590-WTP-IID-MH-10-001, *Internal Interface Document for In-Cave Tools*

The PM gripper extension interfaces with the overhead crane mounted power manipulator to operate the flexible process jumper connectors. It extends the finger length of the hand to allow the side mounted operating push button on the connector to be reached. It also provides a compliant grip between the connector and hand to allow for misalignment of the connector halves and lines up the connection with the power manipulator wrist mounted camera to provide operator viewing without parallax error. A dedicated purpose built park stand is provided for the gripper extension.

4.1.1.8.9 Weigh Scale

Melter Cave 1, 24590-HLW-FH-HSH-TOOL-00026
Melter Cave 2, 24590-HLW-FH-HSH-TOOL-00061

Non-Safety, SC-V

Refer to 24590-WTP-IID-MH-10-001, *Internal Interface Document for In-Cave Tools*

The weigh scale is a modified commercially available crane scale. It mounts between the crane hook and the lifted component and is equipped with a large dial indicator for readout via camera or shield window. It is primarily used for weighing solid waste baskets prior to export from the melter cave to ensure the basket is under the 1000 lb weight limit with an accuracy level above that of the crane load cell. A dedicated hanger is provided to store the weigh scale when not in use.

4.1.1.8.10 Remote Grease Gun

Melter Cave 1, 24590-HLW-FH-HSH-TOOL-00066

Melter Cave 2, 24590-HLW-FH-HSH-TOOL-00067

Non-Safety, SC-V

Refer to 24590-WTP-IID-MH-10-001, *Internal Interface Document for In-Cave Tools.*

The remote grease gun is used for in-situ grease addition to process equipment bearings in the melter cave. Both the HFP agitators and vertical transfer pumps require periodic grease addition to their radial and thrust bearings to achieve the required design life. The grease gun is equipped with a remote quick connect for dispensing of grease and is operated with the crane mounted power manipulator. The grease gun is MSM loaded with a metered, pre-filled cartridge that has been imported through the tool transfer port. Frequency of use is pre-determined upon the original equipment manufacturers recommendations but, at a minimum, semi-annual operation is recommended to preclude radiation induced hardening of the grease in the supply lines between the fittings and grease reservoir.

4.1.1.9 Out-Cave Equipment

4.1.1.9.1 Local Operator Interface (LOI) and Closed Circuit Television Video (CCTV)

Refer to: 24590-HLW-JJ-PCJ-00001, *River Protection Project Waste Treatment Plant Control System Architecture Diagram HLW*

Refer to: 24590-HLW-JJ-PTJ-00001, HLW Vitrification System PTJ Control System Architectural Diagram

Refer to: 24590-HLW-J0-PTJ-00002, *HLW Vitrification System PTJ Supplemental Instr Diagram CCTV Equipment Plan At EL.0'-0"*

Refer to: 24590-HLW-J0-PTJ-00003, *HLW Vitrification System PTJ Supplemental Instr Diagram CCTV Equipment Plan At EL. 14'-0"*

Refer to: 24590-HLW-J0-PTJ-00004, *HLW Vitrification System PTJ Supplemental Instr Diagram CCTV Equipment Plan At EL. 37'-0"*

Refer to: 24590-HLW-J0-PTJ-00005, *HLW Vitrification System PTJ Supplemental Instr Diagram CCTV Equipment Plan At EL. 58'-0"*

There are six designated LOIs for the HSH system, with plant item number, LOI number, and location as follows:

24590-HLW-JC-HSH-PNL-00003, HSH Melter Cave #1 LOI #9 (HC0206, 14 ft East, Sorting Area)
24590-HLW-JC-HSH-PNL-00030, HSH Melter Cave #1 LOI #15 (HM0119, 3 ft West, Breakdown Area)
24590-HLW-JC-HSH-PNL-00032, HSH Melter Cave #1 LOI #13 (HM0206, 22 ft3 inch East, CDA)
24590-HLW-JC-HSH-PNL-00013, HSH Melter Cave #2 LOI # 11 (HC0204, 14 ft East, Sorting Area)
24590-HLW-JC-HSH-PNL-00031, HSH Melter Cave #2 LOI # 14 (HM0103, 3 ft West, Breakdown Area)
24590-HLW-JC-HSH-PNL-00033, HSH Melter Cave #2 LOI # 12 (HM0204, 22 ft 3 inch East, CDA)

LOI's throughout the facility are standardized to provide common operator controls, and therefore reduce human error. Each LOI has access to the cameras located in System HSH, and may be used to control equipment movement via the ICN. The two decontamination area overhead cranes are uniquely controlled as they are a hybrid between a commercial crane and an in-cave process crane. The two decontamination areas crane motion is via the vendor supplied radio pendent controls and not through the ICN. Hence, remote operation of these cranes

will require the operator to be adjacent to one of the LOIs to control the crane mounted cameras and receive camera images.

A combination of overhead crane mounted, through wall and wall mounted CCTVs provide operator viewing of remote operations within the melter cave and associated crane maintenance and crane decontamination areas.

The crane maintenance area is equipped with one pan, tilt, zoom (PTZ) camera mounted on the +58 ft platform directly in line with the horizontal shield door aperture.

The crane decontamination area is also equipped with one PTZ camera mounted on the +58 ft platform directly in line with the horizontal shield door aperture and another overtop of the decontamination pit. The CDA may be further equipped with two PTZ cameras mounted at a lower elevation to provide side views of remote operations.

The equipment decontamination pit is equipped with two through wall cameras; one near the lower window and one near the upper window.

The breakdown area within the melter cave is equipped with one wall mounted PTZ camera on the north wall and one through wall camera in the west wall. The melter cave area is equipped with three PTZ cameras along the east wall, approximately located overtop of the sorting table, posting table and tool storage table. Two more PTZs are located along the south wall of the cave, in-line with the feed and feed preparation vessels. The sixth and last PTZ within the general melter cave area is above and north of the SBS vessel.

4.1.1.9.2 Hydraulic Power Unit

Melter Cave 1, 24590-HLW-MH-HSH-MHAN-00015
Melter Cave 2, 24590-HLW-MH-HSH-MHAN-00067

Non-Safety, SC-IV

Refer to 24590-WTP-3PS-MZ00-T0001, *Engineering Specification for Hydraulic Power Pack for In-Cave Equipment*

Refer to 24590-HLW-M0D-HSH-00269, *24590-HLW-MH-HSH-MHAN-00015 – Melter Cave 1 Hydraulic Power Pack*

The hydraulic power unit (HPU) provides fluid power to the through wall HPMs, decontamination pit shield lid, in-cave portable hydraulic tools, in-cave wall mounted fixed shear and the C3/C5 airlock shield door (System HMH). The HPU is skid mounted in the C2 corridor at elevation 0 ft at the north end of the HLW Facility. Out-cave location allows for hands on maintenance. There is one power pack for each melter cave. The HPUs are cross connected to allow one unit to provide fluid power to either melter cave. The HPUs provide a fire resistant water-glycol fluid mix at a flow rate up to 20 gpm at 3000 psi and develop a peak pressure of 4000 psi. The main pumps are pressure compensated with variable flow to automatically meet the demand of servo-valve controlled manipulators and other hydraulically powered equipment. Each unit also has a low pressure kidney loop for filtration and temperature control. The hydraulic network is routed along the north wall of both melter caves with branch lines up each side of both melter caves. Local hydraulic racks with integral velocity fuses provide protection against hose failure prior to the hoses passing through the C5/R5 boundary.

Figure 4-57 – Hydraulic Power Unit

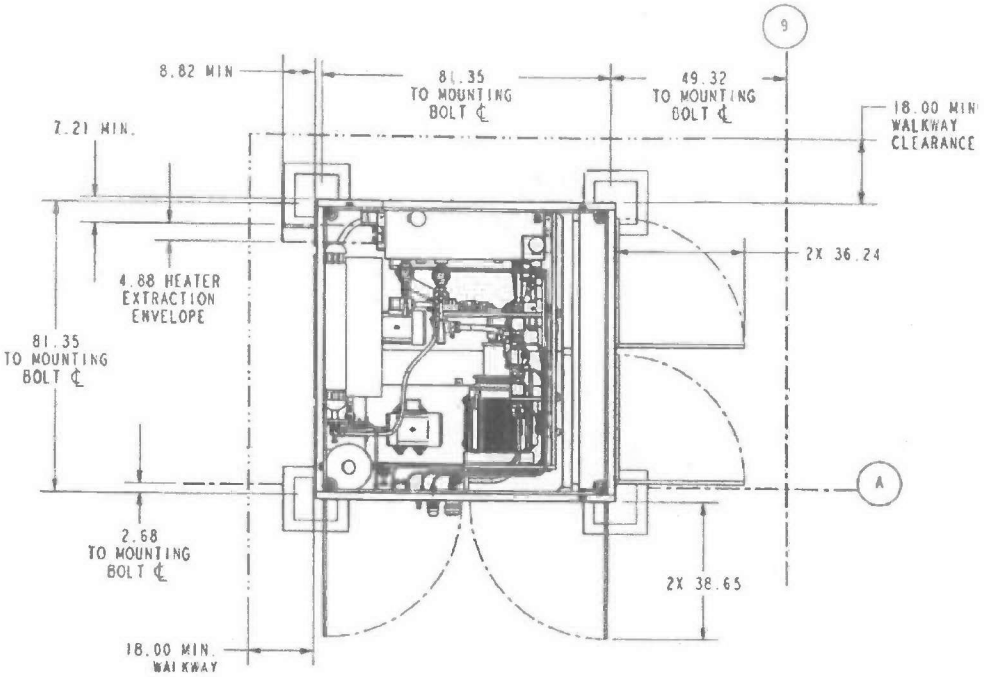

4.1.1.9.3 Vertical Shield Door Recovery Device

Melter Cave 1 or 2, 24590-HLW-MH-HSH-RCVY-00003
Melter Cave 1 or 2, 24590-HLW-MH-HSH-RCVY-00015

Refer to 24590-WTP-M0-10-00004001, *WTP Vitrification Design Proposal Drawing Universal Vertical Shield Door Recovery System*

The vertical shield door recovery device is used to recover a vertical shield door from a drive train failure. It is positioned out-cave above the vertical shield door. The recovery device will not be purchased until it is needed. Refer to Section 4.2.4.3 for proposed recovery methodology and required equipment.

4.1.1.9.4 Horizontal Shield Door Recovery Drive

Melter Cave 1 or 2, 24590-HLW-MH-HSH-RCVY-00006

Non-Safety, SC-V

Refer to: 24590-WTP-3PS-MX00-T0003, *Engineering Specification for QL Through Wall Devices*

Refer to 24590-WTP-M0-10-00003001, *WTP Vitrification System Design Proposal Drawing Horizontal Shield Door Recovery Drive Assembly*

The horizontal shield door recovery drive is used in conjunction with a horizontal shield door recovery plug to recover a horizontal shield door from a drive failure. The in-cave side of the recovery plug is equipped with a receiver that mates with a lug on the horizontal door. The out-cave side of the plug interfaces with the recovery

drive extensions. The recovery drive utilizes a series of retrieval extensions that attach to the plug, and then are fed through the plug liner to couple the recovery plug to the lug on the side of the door. Once the door lug is captured on the plug and extensions, the drive is used to pull the door closed.

Figure 4-58 – Horizontal Shield Door Recovery Drive

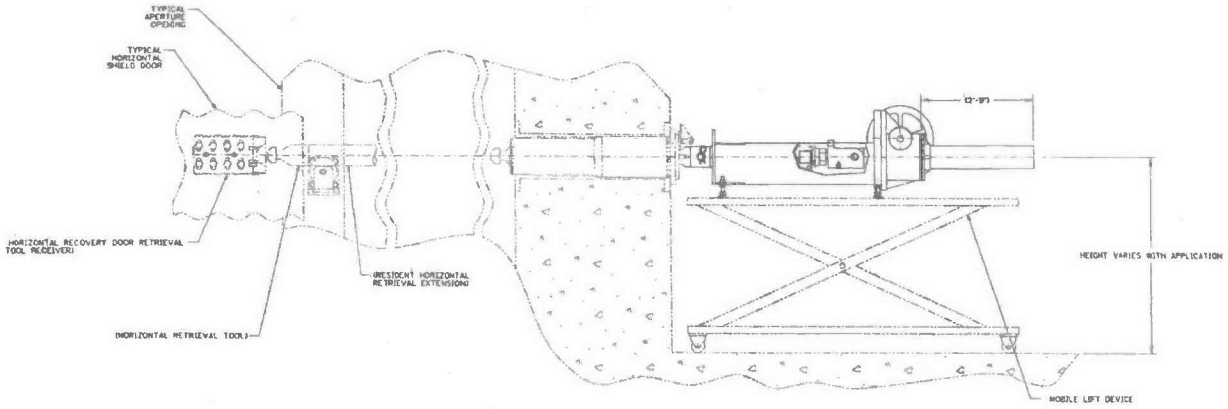

4.1.1.10 Miscellaneous Equipment

4.1.1.10.1 Window Replacement Shield Plates and Hook Plugs (Future)

Melter Cave 1 and 2, 24590-HLW-DD-HSH-SHLD-00001 (Shield Plates)
Melter Cave 1 and 2, 24590-HLW-DD-HSH-SHLD-00002 (Hook Plug)
Melter Cave 1 and 2, 24590-HLW-DD-HSH-SHLD-00003 (Hook Plug)

Safety and seismic category are TBD*.

For more information, see specification 24590-WTP-3PS-TBD*.

The Window Replacement Shield Plates (future) will be used to provide shielding for the C2 corridor during a shield window replacement. The shield plates will be remotely hung from hooks mounted on special through wall liner plugs prior to removing the shield window. The shield plates must hang within 1 inch of the face of the concrete to ensure C5 ventilation functionality. Once the shield window has been replaced, the shield plates will be removed. Note, these shield plates and hook plugs may be used throughout the HLW Facility.

4.1.1.10.2 Shield Window Protection Barriers

Melter Cave 1, 24590-HLW-SY-HSH-SPAN-00001 through HSH-SPAN-00008 inclusive
Melter Cave 2, 24590-HLW-SY-HSH-SPAN-00009 through HSH-SPAN-00016 inclusive

Non-Safety, SC-III

The shield window protection barriers provide protection to the shield windows from inadvertent swinging, rotating or flung loads. The barriers are remotely mounted on the in-cave side of the shield window. They allow operators to see into the cave while providing protection to the window. There are a total of eight barriers installed per melter cave. They are mounted on all of the shield windows inside the melter cave, the window in the crane decontamination area and the two windows in the decontamination pit.

Figure 4-59 – Shield Window Protection Barrier

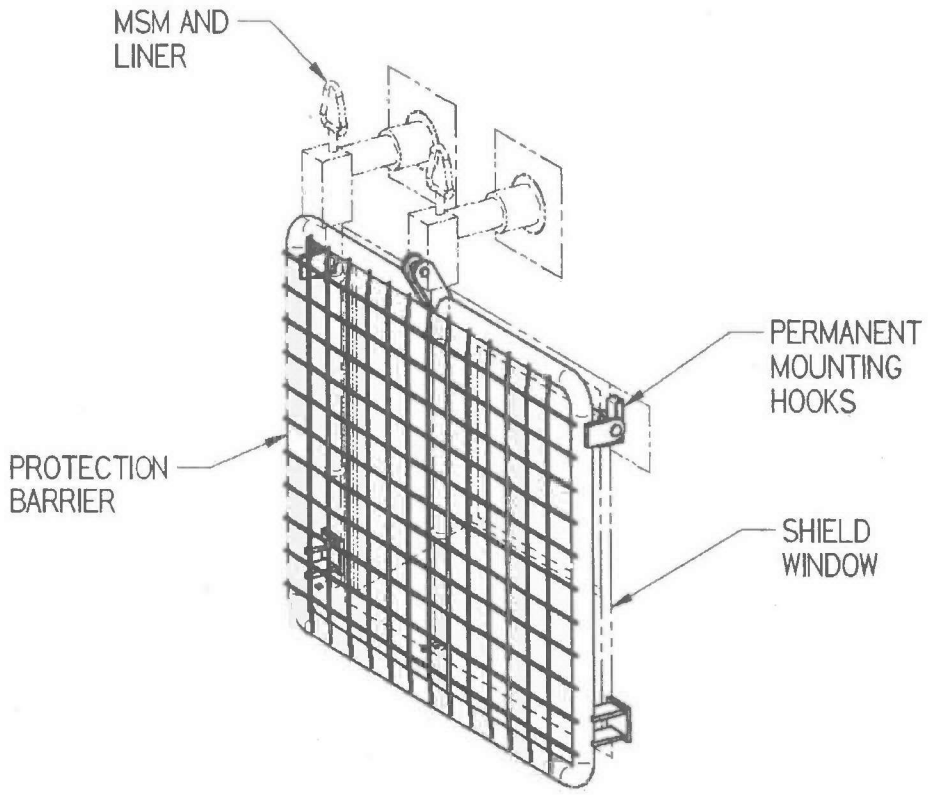

4.1.1.10.3 Canister Grapple

Melter Cave 1 and 2, 24590-HLW-FH-HSH-TOOL-00004

Refer to: 24590-WTP-3PS-MQL0-T0003, *Engineering Specification for Special Grapples and Lifting Devices*

Refer to 24590-HLW-M0-30-00012, *HLW Vitrification Design Proposal Drawing Mechanical Sequence Canister Grapple*

The canister grapple is designated as WAI (Performance and Passive). The reason for the performance WAI designation is that the design requirements for the grapple are included in 24590-HLW-PL-RT-07-0001, *IHLW Waste Form Compliance Plan for the Hanford Tank Waste Treatment and Immobilization Plant*, and provided in 24590-HLW-RPT-RT-08-001-05, *Canister Description for Immobilized High Level Waste Product Qualification*, Section 2.5. The design of the grapple prevents an inadvertent release of the suspended canister; the grapple fingers cannot become disengaged from the canister flange during normal handling operations (two full set downs of the canister are required to release the fingers); the grapple is capable of being remotely engaged and disengaged from the HLW canister flange within a maximum diameter of 24 inch (60.9 cm) when attached to the

crane hook. The reason for the passive WAI designation is to minimize damage to the canister by ensuring the grapple has a smooth profile and smooth surface finish to reduce scratching to a minimum, also the use of paint and liquid lubricants is minimized on the grapple to prevent the introduction of foreign materials into the canister. The full scope of WAI requirements applicable to the grapple are documented on the waste acceptance impacting screening form 24590-HLW-WSF-ENG-07-003, section 8.3.

The canister grapple is mechanically actuated lifting device used to transport canisters. The grapple is suspended from the 25 ton main crane hook. The grapple includes an indexing feature that requires two fully lowered set downs to open the fingers and disengage the canister. This feature prevents an inadvertent release of the canister during handing, for example, if the canister hits an obstruction during transport, or begins tipping due to an uneven set down surface. The grapple is fitted with indicators that signal when the fingers are in the open or closed position, and also indicate the indexing stage, that is, has one set down or two set downs been completed.

The configuration of the grapple fingers ensures that it is not possible to lift the canister unless all three fingers are fully engaged. The grapple is equipped with an emergency means to retract the fingers from the canister should the normal disengagement mechanism fail. This disengagement will be performed remotely with MSMs. The grapple is fabricated mainly of stainless steel to aid in decontamination and improves durability of the mechanical components during the decontamination process.

The melter cave canister grapple would only be introduced into the melter cave should a canister need to be recovered from a pour tunnel bogie.

Figure 4-60 – Canister Grapple

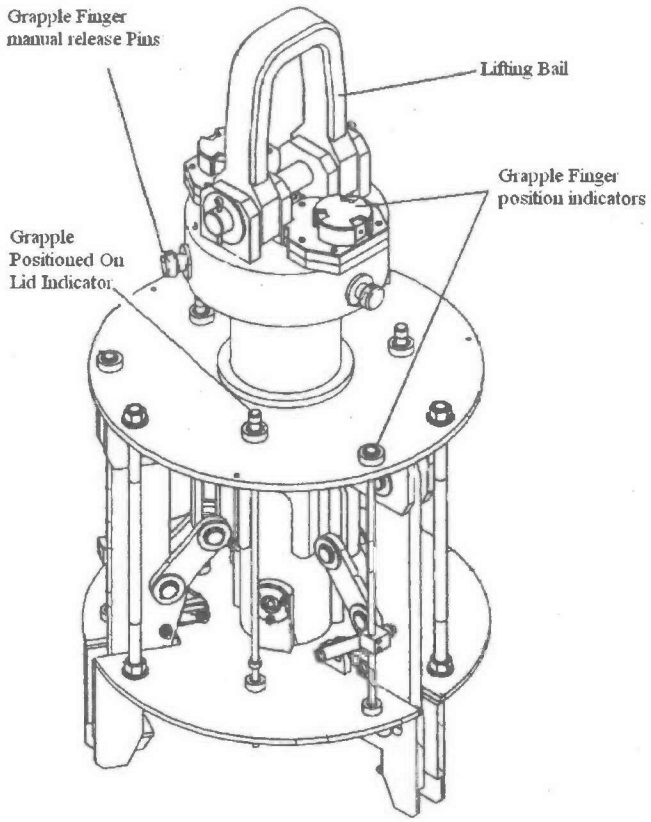

4.1.1.10.4 Flexible Jumper Pull Back Tool

Melter Cave 1 and 2, 24590-HLW-FH-HSH-TOOL-00073 (2" Joggle)
Melter Cave 1 and 2, 24590-HLW-FH-HSH-TOOL-00074 (3" Joggle)

Non-Safety, SC-V

Refer to 24590-WTP-IID-MH-10-001, *Internal Interface Document for In-Cave Tools*

The flexible jumper pull back tools are dedicated handling devices used to handle "pull back" jumpers. A pull back jumper is a flexible jumper that is pulled back through a joggle from the hot side of a cave wall to the cold side of a wall. This process is required because the electrical or process connector is too large to fit through the joggles, therefore the free end (un-terminated) cable or hose starts in the in-cave side and is pulled back into the out-cave side. The puller is manually operated from the out-cave side to capture the bail on pull back jumper once the bail has been properly positioned into a capture hook by the overhead power manipulator crane. Additional out-cave radiological monitoring, containment provisions and contamination control measures would be required to perform this operation.

Figure 4-61 – Flex Jumper Pull Back Tool

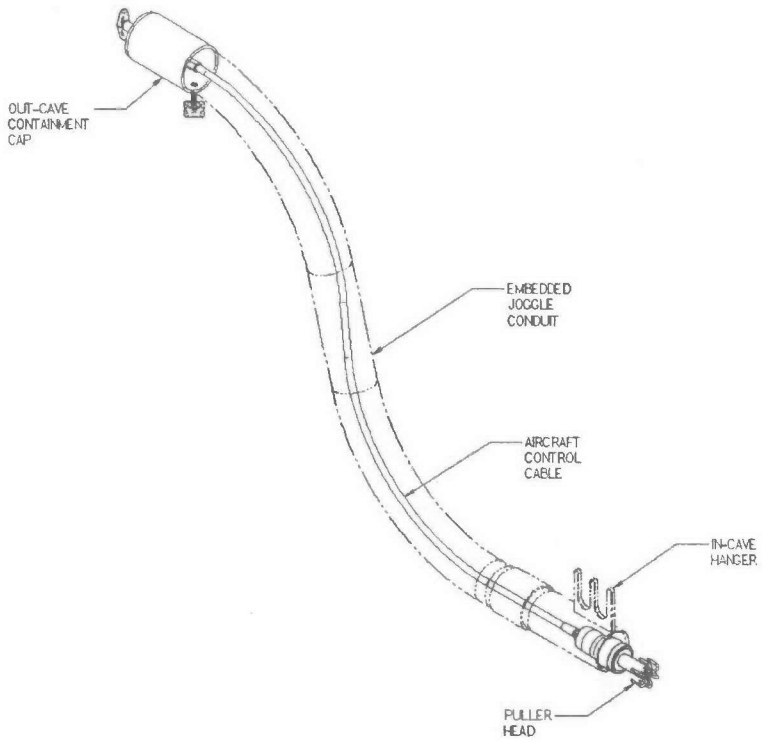

4.1.1.10.5 Torque Verification Tool

Melter Cave 1, 24590-HLW-FH-HSH-TOOL-00083
Melter Cave 2, 24590-HLW-FH-HSH-TOOL-00084

Non-Safety, SC-V

Refer to 24590-WTP-IID-MH-10-001, *Internal Interface Document for In-Cave Tools*

The torque verification tool is located in-cave, which allows the torque set point of an in-cave torque tool to be verified remotely prior to use. Due to the array of possible remote fasteners and the unique torque requirements for each, a simple and reliable in-cave method of verifying the torque output of the various impact wrenches, nut runners and Grayloc wrench reaction units is provided. The torque verification tool comes equipped with the requisite assortment of operating nut adapters and reaction pad adapters to match each torque tool socket and reaction arms / spike bars. To prevent free spinning when under load, the torque verification tool must be remotely bolted to the false floor panels or tool table.

4.1.2 Boundaries and Interfaces

The HSH boundary with the HLW Radioactive Solid Waste Handling System (RWH) is at the drum transfer tunnel. For the HLW Melter Handling System (HMH), HLW Melter Process System (HMP), HLW Melter Feed Process System (HFP), HLW Melter Offgas Treatment Process System (HOP) and various utilities, the boundaries are at the interface with the HSH remote handling equipment.

The primary interface between the HSH and other systems occurs with the overhead cranes and the wall-mounted MPMs or HPMs since the HSH provides life-cycle maintenance for all equipment within the C5/R5 melter cave environment.

A brief description of the various systems that interface with System HSH is contained in Table 4-1.

Table 4-1 – System HSH Interfaces

HSH Interfaces with	Description
BSA – Breathing Service Air System	System BSA provides breathing air for personnel entry into the melter cave crane maintenance area or crane decontamination area. Breathing air stations are located in the sub-change rooms outside of the shielded personnel access doors on elevations +23 ft and +58 ft accordingly.
C2V through C5V – C2 Ventilation System through C5 Ventilation System	System C2V through C5V provides temperature controlled in-bleed air into the crane maintenance area, crane decontamination area and melter cave and exhausts air from the melter cave in a balanced flow that maintains engineered air gaps across shield door openings.
DIW – Demineralized Water System	System DIW provides demineralized water to System HSH spray lances for manual or remote decontamination purposes.
GRE – Grounding and Lightning Protection Electrical System	System GRE provides equipment grounding to all System HSH electrical powered equipment and many pieces of non-electrical equipment including shield windows and embedded liners.
HFH – HLW Filter Cave Handling System	System HFH may export tools or equipment, through the System RWH drum transfer tunnel and waste transfer port, to System HSH for disposition as solid waste or for remote decontamination prior to contact maintenance.
HFP – Melter Feed Process System	System HSH enables lifecycle maintenance of the remotable melter feed components within the melter cave. This includes feed pumps, agitators, jumpers, instrumentation and vessels. System HFP components that require handling by System HSH are designed to be compatible with the System HSH equipment.
FPW – Fire Protection Water	System FPW provides fire protection water to the sprinkler system in the gloveboxes.
HMH – HLW Melter Handling System	System HMH provides the equipment and controls necessary to transfer a new melter or vessel within a shielded overpack (future) to the C3/C5 airlock for pass off to System HSH. The interface between the HMH and the HSH systems happens once the HLW Melter in-cave winch pulls the melter out of the overpack. In addition, System HMH will remove a spent melter or vessel from the melter cave. System HMH also provides the C2/C3 and C3/C5 airlock shield doors, and all drive and control mechanisms necessary to operate them. System HMH provides a free spooling winch with a remote hook to attach and pull the items out of the melter cave. System HMH also provides the airlock and melter rails.

HSH Interfaces with	Description
HMP – Melter Process System	System HSH enables lifecycle maintenance of the remotable melter process system components within the melter cave. This includes the melter, lid components, bus system, pour spout and jumpers. System HMP components that require handling by System HSH are designed to be compatible with the System HSH equipment.
HOP – HLW Melter Offgas Treatment Process System	System HSH enables lifecycle maintenance of the remotable melter offgas system components within the melter cave. This includes the SBS, HEMEs, lid components, instrumentation and jumpers. System HOP components that require handling by System HSH are designed to be compatible with the System HSH equipment.
HPH – HLW Canister Pour Handling System	System HPH may export tools or equipment to System HSH through the canister pour tunnel for disposition as solid waste or for remote decontamination prior to contact maintenance. Additional, System HSH may recover a product canister from the pour bogie in the pour tunnel.
HPS – High Pressure Steam System	System HPS provides steam to the System HSH decontamination tank and pump support package for tank heating or steam cleanout of the tank drain line.
ISA – Instrument Service Air System	System ISA provides compressed air to the System HSH through the C5/R5 cell walls; decontamination tank for sparging, plasma torch for cutting, CMA and CDA for air tools and melter cave for breakdown area hoist and in-cave air tools.
LTE – Lighting Electrical System	System LTE provides general area lighting in the crane maintenance and crane decontamination area and through-wall or remotable wall mounted lights in the equipment decontamination pit and melter cave. System HSH performs the handling of the remotable in-cave wall mounted lights. The through-wall lights are serviced with the MSM extraction cart.
LVE – Low Voltage Electrical (480/208/120 V) System	System LVE provides electrical power to System HSH electrical equipment.
MHJ - Mechanical Handling Control System	System MHJ provides supervisory control to ICN connected System HSH equipment.
PTJ – Process & Mechanical Handling CCTV System	System PTJ provides the closed circuit television cameras, controls, communications and operator display screens for remote viewing within System HSH.
PVV – Process Vessel Vent Exhaust System	System HSH enables lifecycle maintenance of the remotable process vessel vent components within the melter cave. This includes jumpers only. System PVV components that require handling by System HSH are designed to be compatible with the System HSH equipment.
PWD – HLW Plant Wash and Disposal System	System PWD provides decontamination media to the System HSH decontamination tank, pump support package, parts washer and spray lances for equipment decontamination.
RLD – HLW Radioactive Liquid Waste Disposal System	System RLD receives effluent from the System HSH decontamination tank, parts washer, and spray lances, and physically interfaces with the sump baskets.
RWH - Radioactive Solid Waste Handling System	System RWH receives solid waste in waste baskets from System HSH through the waste transfer port.

4.1.3 Physical Layout and Location

System HSH is contained within an operating envelope consisting of six discrete areas, five of which are separated by shield walls, shield doors or shield lids. These areas are the operations corridors, the crane maintenance area (CMA), the equipment maintenance area (EMA), the crane decontamination area (CDA), the equipment decontamination pit (EDP) and the melter cave. See Figure 4-65, HLW Key Plan, for relative location of the melter caves within the HLW Facility; Figure 4-66for System HSH Operating Rooms and Platforms; and Figure 4-67and Figure 4-68for System HSH Plan Views. The C2/R2 operations corridors are a low contamination / low radiation area where the majority of the melter cave remote operations are conducted from. The crane and equipment maintenance areas are C3/R3 areas. The crane decontamination area is a dual classified C3/R3/C5/R5 area. The EMA, CMA and CDA are only accessible through controlled entryways. Access to these areas will depend upon the radiological conditions encountered. The equipment decontamination pit and melter cave are both C5/R5 areas. Although the absence of contaminated melter cave equipment within the EDP may lower the radiation level to below R5, it is anticipated that entry into the equipment decontamination pit, like the melter cave, would be prohibited during the WTP operational life.

Figure 4-62 – HLW Key Plan

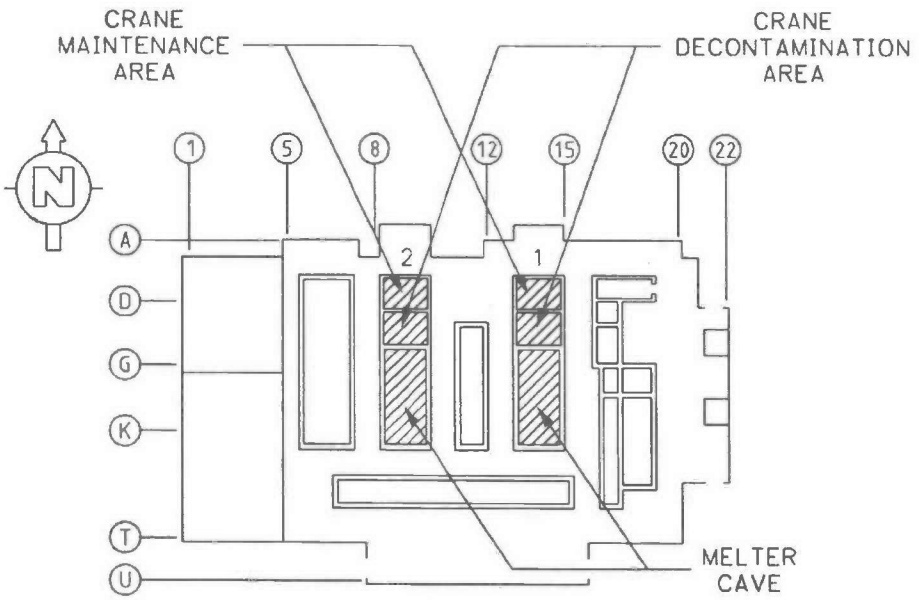

HLW KEY PLAN AT EL. 14'-0"

4.1.3.1 C2/R2 Operating Corridors

The C2/R2 operating corridors are shielded from the other operating areas of System HSH through concrete shield walls, shielded through-wall penetrations, shield windows or shielded personnel access doors. Contamination control is achieved through engineered air inlets, C2/R2 sub-change rooms, seals on penetrations and bag out provisions on items penetrating cave walls through embedded liners. All remotable melter cave operations are conducted from either the crane control room (CCR) or the operations corridors situated along the east and west walls of the melter cave. Operation of the main melter cave crane and power manipulator crane may be performed at either the CCR or through local operator interface (LOI) panels. Operation of the decontamination area crane is performed at an LOI station adjacent to the crane decontamination area. All hydraulic power or master slave manipulator operations are performed directly at the cave face shield window

stations. Fixed and temporary local operation panels are situated along the operating corridors as necessary to allow remotable operations to be conducted. The C2/R2 operating corridors provide access to the airlocks and sub-change rooms for equipment and personnel entry into the C3/R3 areas of System HSH. The elevation 0 ft corridor accesses the System HMH C2/C3 melter airlock and the west side cave face operations platform at elevation +3 ft. The elevation +14 ft corridor accesses the east side cave face operations area and the elevation +23 ft platforms and sub-change room. The elevation +58 ft corridor accesses the sub-change at the north end of the CMA. The C2/R2 corridors also house the crane slip ring assemblies, posting port glovebox, portable pressure and carbon dioxide (CO_2) blast units, a chemical injection drum and pump for the decontamination tank, the hydraulic power unit and hydraulic fluid power distribution network. Additionally, the C2 operation corridors provide extraction volumes for through wall equipment and access routes to the C3 workshop for the extracted equipment.

4.1.3.2 Crane Maintenance Area

The crane maintenance area (CMA) is a shielded concrete enclosure approximately 24' long by 36' wide with the floor at elevation +23 ft and the roof elevation at elevation +72 ft. It is located directly overtop the C2/C3 melter airlock. The CMA provides a hands-on (contact) maintenance area for cranes and equipment and an import / export route for both personnel and equipment. As a result, the CMA is a C3/R3 rated area. The CMA connects to the C2/R2 operating corridors through shielded personnel access doors (SPADs) at elevations +23 ft and +58 ft and the C2/C3 melter airlock below through a crane operable, three section, shielded floor hatch. The elevation +58 ft SPAD accesses a series of platforms and ladders used for access to the melter cave main crane, power manipulator crane and maintenance and decontamination area cranes. These platforms also provide a personnel access route to the crane decontamination area (CDA) platforms. The CMA connects to the CDA's north end through a set of vertical and horizontal crane shield doors and though a third SPAD. The CMA is equipped with a dedicated manually operated maintenance crane, equipment maintenance templates and rack, and a shuttle cart that is used for remote equipment import and export into the CDA. Manually operated spray lances and hose reels are mounted at the north end of the CMA. These may be laid out along the platforms into the CDA to assist in manual crane decontamination. The CMA also houses the cable reels serving the melter cave main crane and power manipulator crane. The northwest corner of the CMA floor is open to access the equipment maintenance area (EMA) below. The CMA is equipped with a stainless steel liner that extends across the floor and 4 ft up the walls.

4.1.3.3 Equipment Maintenance Area

The equipment maintenance area (EMA) is an enclosed concrete room that is adjacent to the C2/C3 melter overpack airlock in the northwest corner of the room. It is approximately 17 ft long by 10 ft wide with a floor elevation at elevation 0 ft and open to the CMA above. It is equipped with an emergency exit door into the C2/C3 melter overpack airlock for emergency egress purposes. It provides a C3 maintenance area for long process equipment and for extending the telescopic mast of the power manipulator crane for routine maintenance to achieve its 40 year design life. The EMA is equipped with a multi-level access platform and stairs for servicing equipment at various elevations. The platforms are equipped with a square cutout to lower the long equipment down through. The equipment maintenance templates adapt the process equipment mounting flanges to the EMA uppermost platform. A dry sump is located at the bottom of the EMA to provide a wash down collection point. A dedicated, manually operated jib hoist services the EMA for placement of the templates and for hoisting equipment into and out of the area.

4.1.3.4 Crane Decontamination Area

The crane decontamination area (CDA) is a shielded concrete enclosure approximately 26 ft long by 36 ft wide with a floor elevation at elevation +23 ft and the roof elevation at elevation +72 ft. It is located directly overtop the C3/C5 melter overpack airlock. The CDA provides a C3/C5 decontamination area for cranes and continues the import / export route from the CMA to the melter cave. The CDA is connected to both the melter cave's north end and the CMA's south end through matching sets of vertical and horizontal crane shield doors. The CDA is also connected to the CMA through the fore-mentioned SPAD at elevation +58 ft. The CDA is a dual classified C3/C5/R3/R5 area. When the decontamination area shield doors are open to the melter cave, or when melter cave equipment is being transported through the room to the equipment decontamination pit, the CDA is C5/R5. During remote decontamination activities within the CDA, it is a C5 environment, regardless of shield door or decontamination pit shield lid status. If the shield lids are open during storage or decontamination of equipment within the EDP, it is a C5/R5 environment. The only time the CDA is a C3/R3 environment is when the decontamination area shield doors and the decontamination pit shield lids are closed and equipment within the room has been decontaminated to an acceptable level. Due to the dual rating, tasks within the CDA are performed both remotely and hands-on. It is equipped with an equipment stand, equipment decontamination templates and a storage rack, drip pans, a small parts washer and crane decontamination equipment, a shield window, manipulator ports and its own remotely operated maintenance decontamination crane for remote operation under R5 scenarios. The SPAD accesses crane maintenance platforms for manual decontamination of the melter cave cranes and maintenance access to the CDA crane. The northwest corner of the CDA opens onto a self-contained, shielded equipment decontamination pit though a pivoting shield lid. The CDA is equipped with a stainless steel liner that extends across the floor and up to the main crane rail support corbels.

4.1.3.5 Equipment Decontamination Pit

The equipment decontamination pit (EDP) is a shielded concrete pit that is adjacent to the C3/C5 melter overpack airlock in the northwest corner of the room. It is approximately 20 ft long by 9 ft wide with a floor elevation at elevation 0 ft and a roof elevation at elevation +27 ft 6 in. The roof is a hydraulically actuated shield lid that pivots open to the CDA above. The EDP is a self-contained C5/R5 remote decontamination area that serves to limit the spread of contamination into the CDA when decontaminating primary process or mechanical handling equipment. The decontamination pit houses the decontamination tank, tank pump support package, two shield windows, manipulators, spray lances, shelves, through wall lights, cameras, and an equipment decontamination turntable. A spare embedded liner is available for an operations provided future swab posting port. Equipment decontamination templates interface with the decontamination tank and the equipment turntable to support various process equipment at discrete elevations within either the tank or the pit itself. Set down pads and plinths on the floor of the EDP allow staging the equipment stand for either interim storage or spray lance decontamination of equipment. The spray lances are capable of spraying high pressure water, steam, or operations provided carbon dioxide CO_2 pellets. An ejector equipped sump is located at the bottom of the sloped EDP floor. Both the decontamination tank and the EDP sump are equipped with remotable screened baskets to capture and prevent oversized debris from entering either the tank recirculation pump or the HLW Radioactive Liquid Drains (RLD) system piping. The EDP is completely stainless steel lined and provides secondary confinement to the decontamination tank.

4.1.3.6 Melter Cave

The melter cave is a shielded concrete enclosure that is approximately 75 ft long by 33 ft wide with a nominal ground floor elevation at elevation +3 ft and a roof elevation at elevation +58 ft. The melter cave houses the high level waste vitrification process equipment. The melter cave is sub-divided into three physical areas; the feed vessel area, off-gas vessel area and melter area. Each area is stainless steel clad to varying elevations to enable routine decontamination with the remotely operated spray lances. At the north end, the melter cave connects to

the C3/C5 melter airlock through the System HMH C3/C5 shield door at elevation +3 ft and to the CDA through the decontamination area shield doors at elevation +23 ft. The melter cave opens to the HLW Canister Pour Handling System (HPH) tunnel through a floor opening near the south end of the cave and to the HLW Radioactive Solid Waste System (RWH) drum transfer tunnel near the northwest corner of the cave.

No personnel access is allowed into the C5/R5 melter cave so all tasks within the cave are performed remotely through a combination of shield windows, cranes, manipulators, a posting port and numerous ancillary mechanical handling equipment. A false floor provides storage and remote handling access to critical melter consumable and process equipment spares. A breakdown table, vacuum system, size reduction equipment and a waste transfer port enable the solid waste export activities arising from normal melter operations. Winches, lifting beams and carts enable the handling of the melter and larger pieces of process equipment. The melter cave contains a 25 ton bridge crane and a bridge crane mounted power manipulator equipped with a one ton auxiliary slewing hoist. Both melter cave cranes traverse from the melter cave through the CDA and into the CMA for decontamination, routine maintenance, inspection, and repair. In addition to the overhead cranes, the melter cave contains multiple through wall master slave manipulators (MSM) and two through-wall hydraulic power manipulators (HPMs) for remote equipment maintenance and size reduction operations. For operational visibility, a series of shield windows in conjunction with a through wall and wall mounted lighting and a closed circuit television (CCTV) system is provided.

Significant rooms that System HSH operates within are:

Melter Cave 1	*Melter Cave 2*	*Room Name*
H-0117	H-0106	Melter Cave
H-0309	H-0303	Crane Maintenance Area (CMA)
H-0309A	H-0303A	Equipment Maintenance Area (EMA)
H-0310	H-0304	Crane Decontamination Area (CDA)
H-0310A	H-0304A	Equipment Decontamination Pit (EDP)

The rooms, platforms, elevations and their general spatial relationship to the melter caves are depicted in Figure 4-66.

Figure 4-63 – System HSH Operating Rooms and Platforms

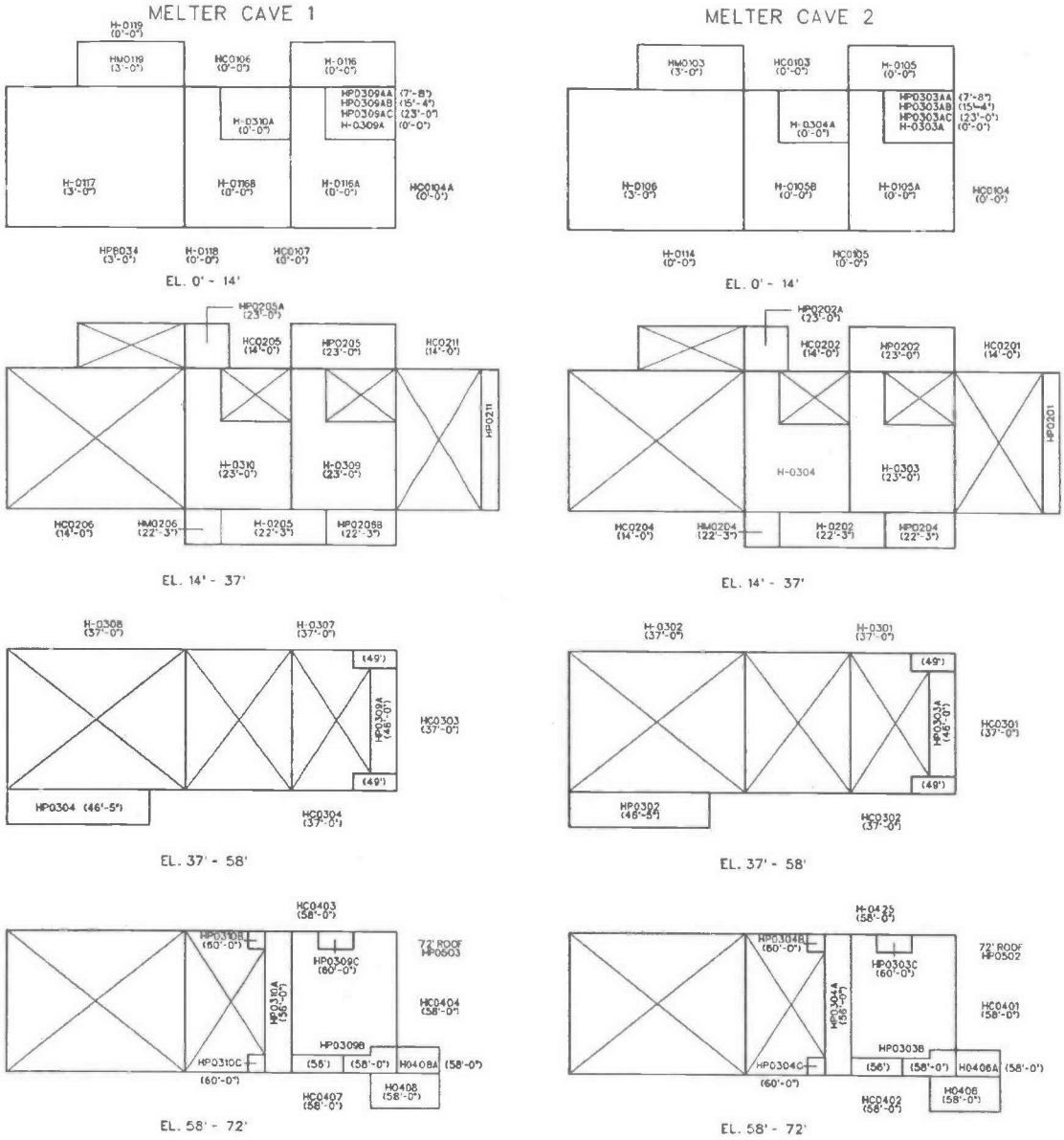

The overall plan view layouts of System HSH are depicted in Figure 4-67 and Figure 4-68.

Figure 4-64 – System HSH Plan View at Elevation +37 FT

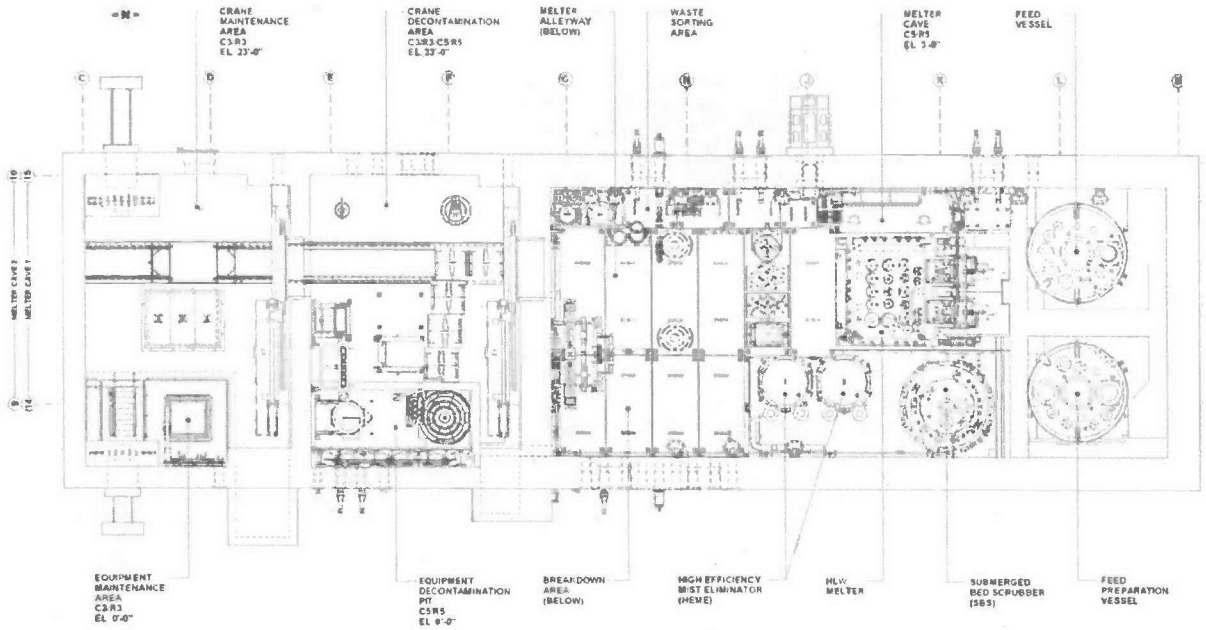

Figure 4-65 – System HSH Partial Plan View at Elevation +68 FT

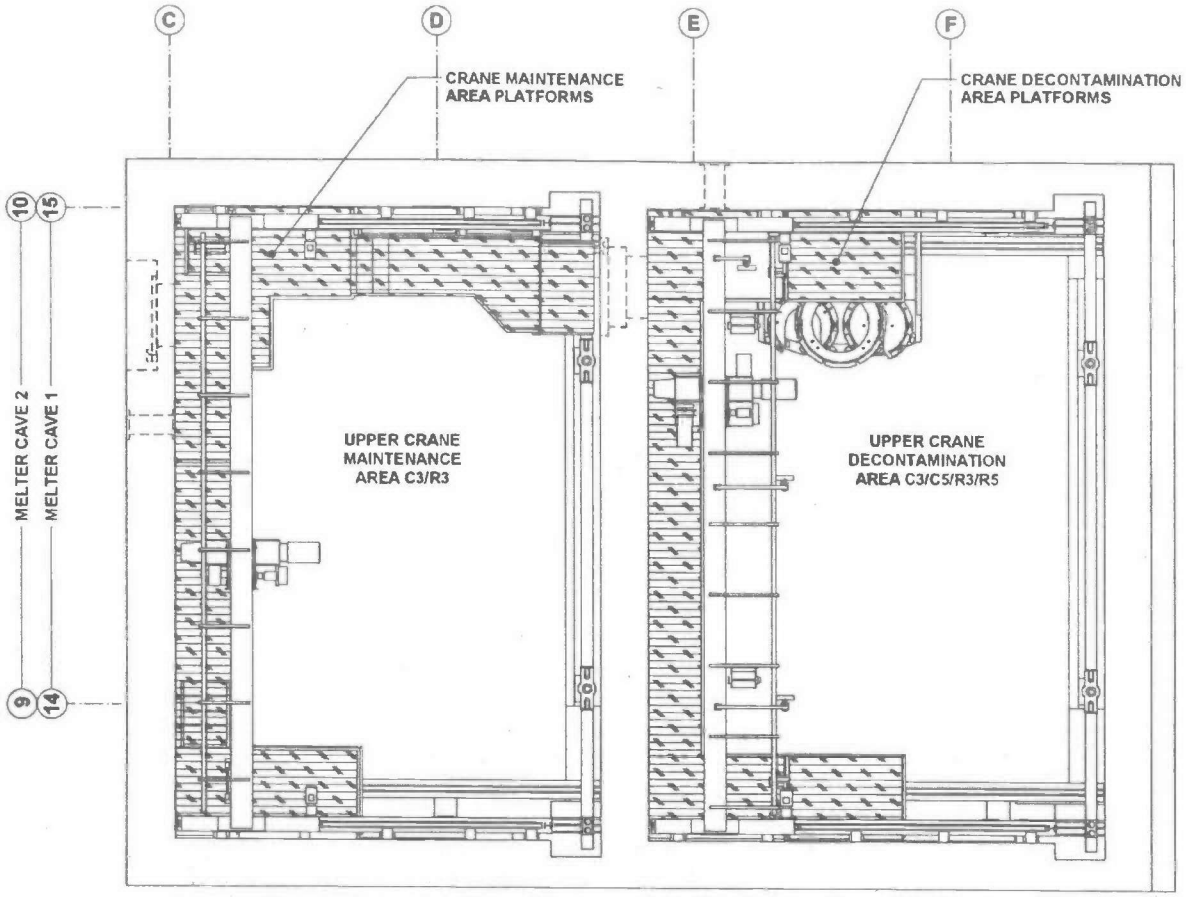

4.1.4 Principles of Operation

Operation of System HSH equipment varies with the location of the operation, the task at hand, and the equipment being operated.

The crane maintenance area and equipment maintenance area contains equipment that may be manually and / or remotely operated and controlled. The crane maintenance area crane and equipment maintenance area jib crane can only be manually (locally) operated and controlled. The maintenance templates are manually operated. The 25 ton crane, power manipulator crane, and shuttle cart may all be remotely or locally controlled via radio pendants when situated within the CMA. However, the maintenance area equipment shield doors cannot be locally controlled from within the CMA. The +58 ft SPAD and its access drawbridge are manually operated only. All spray lance operations within the CMA are manually performed.

The crane decontamination area also contains equipment that may be manually and / or remotely operated and controlled. The crane decontamination area crane, 25 ton crane, power manipulator crane, and shuttle cart may all be remotely controlled or locally controlled when situated within the CDA. The decontamination pit shield lids and decontamination area equipment shield doors cannot be locally controlled from within the CDA. The parts washer may be manually or remotely controlled. Spray lance operations within the CDA are manually performed,

but operation of the crane decontamination system and power manipulator mast wash down are remotely performed.

The equipment decontamination pit operations are all remotely performed, either through remote control of the decontamination tank process or through remote handling of the equipment within the EDP, including MSM spray lance operation. When equipment is brought into the decontamination pit with the 25 ton crane or power manipulator crane, an operator at the decontamination pit shield windows may provide crane signals to an operator out cave of the break down area LOI.

All melter cave operations are performed remotely. Remote operation of equipment varies from crane control room operation of the overhead cranes to MSM master arm manipulation at a cave face shield window station. Cave face local control is provided for the hydraulic power manipulators, central vacuum system, fixed shears, size reduction station, plasma torch, and various other equipment. Each melter cave is equipped with three LOI stations. Remote control of the overhead 25 ton crane and power manipulator crane may also be conducted from the facility crane control room. Both the CCR and LOI stations allow control and viewing of both the crane mounted and wall mounted CCTV cameras.

The following sections contain overall operational methodology for equipment operated through the ICN, from local control panels or radio pendants and select equipment that is remotely operated through other mechanical handling equipment. Simple equipment that is mechanically handled only by hoisting and manipulator operations is not described in detail herein. Operation of this class of equipment is generically addressed in the MFDs contained in Appendix B.

Additional discussion of system operations is provided in Section 4.2.

4.1.5 System Reliability Features

Reserved

4.1.6 System Control Features

4.1.6.1 System Monitoring

Due to the radiological environment of the HSH system, the entire HSH system must be monitored remotely via the CCTV system and LOIs as well as strategic shielded windows installed within the C5 walls. Refer to Section 4.2.3 for all HSH equipment operating manuals that provide detailed description regarding system monitoring, interlocks and local bypasses.

4.1.6.2 System Capability and Locations

Refer to Section 4.2.3, Table 4-4 for all HSH equipment operating manuals that provide detailed description regarding system capability and locations.

4.1.6.3 Automatic and Manual Actions

4.1.6.3.1 Remote Automatic Controls

There are no remote automatic controls for mechanical handling equipment in the HSH system except for the decontamination tanks HSH-TK-00001 and HSH-TK-00002 and associated pumps (HSH-PMP-00001 through -00004). Remote automatic controls for this equipment are contained in 24590-HLW-3YD-RLD-00001, *System Description for the HLW Radioactive Liquid Waste Disposal System RLD*.

4.1.6.3.2 Remote Discrete Controls

Remote discrete controls applicable to the HSH mechanical handling equipment are identified in 24590-HLW-M1-HSH-00001, *Mechanical Sequence Diagram (MSD) for HLW Vitrification System HSH Melter Cave Support.* Discrete continuous controls for the decontamination tanks HSH-TK-00001 and HSH-TK-00002 and associated pumps (HSH-PMP-00001 through -00004) are contained in 24590-HLW-3YD-RLD-00001, *System Description for the HLW Radioactive Liquid Waste Disposal System RLD.*

4.1.6.3.3 Packaged Equipment Local Control Only

Equipment that is operated independently of the ICN is locally controlled. The locally controlled packaged equipment contained within the HSH system is listed in Table 4-2. Refer to the vendor or Bechtel National Inc. (BNI) prepared operating manuals for the instruments and controls for this equipment.

Table 4-2 – Packaged Equipment Local Controls

Equipment No.	Instrument No.	Properties	Function	Remarks
24590-HLW-MJ-HSH-CRN-00010 and 24590-HLW-MJ-HSH-CRN-00012 (Decontamination Area Crane)	Refer to vendor operating manuals 24590-CM-POA-MJKG-00002-51-00016 and 24590-CM-POA-MJKG-00002-51-00017	-	Refer to vendor operating manuals 24590-CM-POA-MJKG-00002-51-00016 and 24590-CM-POA-MJKG-00002-51-00017	None
24590-HLW-MJ-HSH-CRN-00011 and 24590-HLW-MJ-HSH-CRN-00013 (Maintenance Area Crane)	Refer to vendor operating manuals 24590-CM-POA-MJKG-00002-51-00013 and 24590-CM-POA-MJKG-00002-51-00015	-	Refer to vendor operating manuals 24590-CM-POA-MJKG-00002-51-00013 and 24590-CM-POA-MJKG-00002-51-00015	None
24590-HLW-MJ-HSH-CRN-00015 and 24590-HLW-MJ-HSH-CRN-00016 (Maintenance Pit Jib Crane)	Refer to vendor operating manual 24590-CM-POA-MX00-00001-TBD*	-	Refer to vendor operating manual 24590-CM-POA-MX00-00001-TBD*	None
24590-HLW-M0-HSH-GB-00001 and 24590-HLW-M0-HSH-GB-00002 (Glovebox)	Refer to vendor operating manual 24590-QL-POA-M000-00002-TBD*	SC	Refer to vendor operating manual 24590-QL-POA-M000-00002-TBD*	None
24590-HLW-MJ-HSH-MANIP-00002 and 24590-HLW-MJ-HSH-MANIP-00016 (Breakdown Table Hydraulic Power Manipulator)	Refer to vendor operating manual 24590-QL-POA-M0W0-00002-TBD*	SC	Refer to vendor operating manual 24590-QL-POA-M0W0-00002-TBD*	Safety portion limited to through wall portion for C5 integrity.

Equipment No.	Instrument No.	Properties	Function	Remarks
24590-HLW-MJ-HSH-MANIP-00004 and 24590-HLW-MJ-HSH-MANIP-00017 (Sorting Table Hydraulic Power Manipulator)	Refer to vendor operating manual 24590-QL-POA-M0W0-00002-TBD*	SC	Refer to vendor operating manual 24590-QL-POA-M0W0-00002-TBD*	Safety portion limited to through wall portion for C5 integrity.
24590-HLW-MH-HSH-MHAN-00015 and 24590-HLW-MH-HSH-MHAN-00067 (Hydraulic Power Unit)	Refer to vendor operating manual 24590-CM-POA-MZ00-00007-04-00036	-	Refer to vendor operating manual 24590-CM-POA-MZ00-00007-04-00036	None
24590-HLW-MH-HSH-MHAN-00016 and 24590-HLW-MH-HSH-MHAN-00068 (Central Vacuum System)	Refer to vendor operating manual 24590-CM-POA-M000-00009-01-00002	-	Refer to vendor operating manual 24590-CM-POA-M000-00009-01-00002	None
24590-HLW-MH-HSH-RCVY-00005 and 24590-HLW-MH-HSH-MHAN-00049 (Melter Import Winch and Limit Switch Assembly)	Refer to vendor operating manual 24590-CM-POA-MX00-00001-TBD*	-	Refer to vendor operating manual 24590-CM-POA-MX00-00001-TBD*	None
24590-HLW-MH-HSH-RCVY-00013 and 24590-HLW-MH-HSH-RCVY-00021 (Breakdown Area Hoist)	Refer to vendor operating manual 24590-CM-POA-MX00-00001-TBD*	-	Refer to vendor operating manual 24590-CM-POA-MX00-00001-TBD*	None
24590-HLW-FH-HSH-TOOL-00009 and 24590-HLW-FH-HSH-TOOL-00056 (Size Reduction System)	Refer to BNI operating manual 24590-CM-TBD*	-	Refer to BNI operating manual 24590-CM-TBD*	None
24590-HLW-FH-HSH-TOOL-00013 and 24590-HLW-FH-HSH-TOOL-00057 (Fixed Shear)	Refer to BNI operating manual 24590-CM-TBD*	-	Refer to BNI operating manual 24590-CM-TBD*	None
24590-HLW-MQ-HSH-TRLY-00004 and 24590-HLW-MQ-HSH-TRLY-00006 (Shuttle Cart)	Refer to vendor operating manual 24590-CM-POA-MX00-00001-TBD*	-	Refer to vendor operating manual 24590-CM-POA-MX00-00001-TBD*	None

Equipment No.	Instrument No.	Properties	Function	Remarks
24590-HLW-DD-HSH-TWDVC-00001 and 24590-HLW-DD-HSH-TWDVC-00002 (Posting Port)	Refer to vendor operating manual 24590-QL-POA-M000-00002-TBD*	SC	Refer to vendor operating manual 24590-QL-POA-M000-00002-TBD*	None

4.1.6.3.4 Complex Control Schemes

There are no complex control schemes or automated control sequences associated with the mechanical handling equipment in the HSH system that are not packaged equipment controls.

4.1.6.4 Setpoints and Ranges

Refer to the appropriate operating manual for the setpoints and ranges applicable to the equipment.

4.1.6.5 Interlocks, Bypasses, and Permissives

System HSH utilizes safety control system interlocks to prevent radiation exposure to high sources within the melter cave through the posting port or from high sources within the posting port. Non-safety interlocks and permissives exist on major equipment to protect against accidental equipment damage.

For detailed mechanical handling equipment instrumentation and control, refer to 24590-HLW-M1-HSH-00001, *Mechanical Sequence Diagram (MSD) for HLW Vitrification System HSH Melter Cave Support*, for interlocks, permissives, instruments and controls.

4.1.6.5.1 Safety Interlocks

Table 4-3 and Appendix C describes all of the Safety-Significant trips and interlocks for the HSH system. Additional detail regarding the safety interlocks may be found in 24590-HLW-M1-HSH-00001, *Mechanical Sequence Diagram (MSD) for HLW Vitrification System HSH Melter Cave Support.* The MSD identifies the interlock requirements, applicable component tag numbers and applicable instrument numbers.

Table 4-3 – Trips and Interlocks

Equipment No.	Instrument No.	Properties	Function	Remarks
HSH-TWDVC-00001	HSH-ZS-0515	SS	Prevents posting port out-cave shield doors from opening unless the in-cave shield door is closed.	None
	HSH-ZS-0516	SS		None
	HSH-ZS-0503	SS	Prevents posting port in-cave shield door from opening unless the out-cave shield doors are closed.	None
	HSH-ZS-0520	SS		None
	HSH-RE-2801	SS	Prevents posting port out-cave shield doors from opening if the gamma monitor detects a high radiation source.	None
	HSH-RS-2801	SS		None

Equipment No.	Instrument No.	Properties	Function	Remarks
HSH-GB-00001	HSH-ZS-0503	SS	Prevents posting port in-cave shield door from opening unless the out-cave shield doors are closed.	None
	HSH-ZS-0520	SS		None
	HSH-ZS-0515	SS	Prevents posting port out-cave shield doors from opening unless the in-cave shield door is closed.	None
	HSH-ZS-0516	SS		None
	HSH-RE-2801	SS	Prevents posting port out-cave shield doors from opening if the gamma monitor detects a high radiation source.	None
	HSH-RS-2801	SS		None
HSH-TWDVC-00002	HSH-ZS-3805	SS	Prevents posting port out-cave shield doors from opening unless the in-cave shield door is closed.	None
	HSH-ZS-3806	SS		None
	HSH-ZS-3807	SS	Prevents posting port in-cave shield door from opening unless the out-cave shield doors are closed.	None
	HSH-ZS-3811	SS		None
	HSH-RE-3701	SS	Prevents posting port out-cave shield doors from opening if the gamma monitor detects a high radiation source.	None
	HSH-RS-3701	SS		None
HSH-GB-00002	HSH-ZS-3805	SS	Prevents posting port out-cave shield doors from opening unless the in-cave shield door is closed.	None
	HSH-ZS-3806	SS		None
	HSH-ZS-3807	SS	Prevents posting port in-cave shield door from opening unless the out-cave shield doors are closed.	None
	HSH-ZS-3811	SS		None
	HSH-RE-3701	SS	Prevents posting port out-cave shield doors from opening if the gamma monitor detects a high radiation source.	None
	HSH-RS-3701	SS		None

4.1.6.5.2 Non-Safety Interlocks

Non-safety interlocks for the HSH system are documented in 24590-HLW-M1-HSH-00001, *Mechanical Sequence Diagram (MSD) for HLW Vitrification System HSH Melter Cave Support.* The MSD identifies the interlock requirements, applicable component tag numbers and applicable instrument numbers.

4.2 Operations

Reserved – Operation of System HSH equipment varies with the location of the operation, the task at hand and is described in detail in the following sections.

4.2.1 Initial Configuration (Pre-startup)

4.2.2 System Startup

The system, as a whole, has no integrated control and hence, no specific startup routine. Each item of ICN controlled mechanical equipment, i.e. overhead 25 ton crane, power manipulator crane, equipment shield doors and shield lids, is operated autonomously from the local operator interface with each movement being operator initiated. Where system mechanical equipment has coordinated controls with other equipment, the Mechanical Sequence Diagram (MSD) (*24590-HLW-M1-HSH-00001*) describes the required permissive and interlock details.

4.2.3 Normal Operations

Proposed normal operations are described in the accompanying paragraphs and the Mechanical Flow Diagrams. Since System HSH provides lifecycle handling of all remotable melter cave equipment, mechanical handling of all major in-cave equipment is included in the Mechanical Flow Diagrams (MFDs).

The intent of the System HSH MFDs was to ensure that the equipment, infrastructure and layout necessary to provide lifecycle handling of all melter cave remotable equipment was included in the baseline design. As such, the operational sequence steps contained in the MFDs are not to be considered prescriptive, merely general guidance.

Contingency plans for failed systems, structures and components designed for the life of the facility are not included in the operations write up. These are considered off-normal events and each must be dealt with in a unique manner. Additional operations pertinent to System HSH equipment may be found in the technical safety requirements and supplier documents such as operating and maintenance manuals.

Table 4-4 lists the operation and maintenance manuals for the System HSH equipment.

Table 4-4 – Operations Manuals

Plant Item Number	Title	Vendor Document Number
24590-HLW-MJ-HSH-CRN-00001	Main 25 Ton Crane MC1	24590-QL-POA-MJKG-00002-TBD*
24590-HLW-MJ-HSH-CRN-00010	Decontamination Area Decontamination Crane MC1	24590-CM-POA-MJKG-00002-51-00016
24590-HLW-MJ-HSH-CRN-00011	Maintenance Area Maintenance Crane MC1	24590-CM-POA-MJKG-00002-51-00013
24590-HLW-MJ-HSH-CRN-00012	Decontamination Area Decontamination Crane MC2	24590-CM-POA-MJKG-00002-51-00017
24590-HLW-MJ-HSH-CRN-00013	Maintenance Area Maintenance Crane MC2	24590-CM-POA-MJKG-00002-51-00015
24590-HLW-MJ-HSH-CRN-00014	Main 25 Ton Crane MC2	24590-QL-POA-MJKG-00002-TBD*

Plant Item Number	Title	Vendor Document Number
24590-HLW-MJ-HSH-CRN-00015	Maintenance Pit Jib Crane MC1	24590-CM-POA-MX00-00001-TBD*
24590-HLW-MJ-HSH-CRN-00016	Maintenance Pit Jib Crane MC2	24590-CM-POA-MX00-00001-TBD*
24590-HLW-AD-HSH-DOOR-00001	Shield Door Decontamination Vertical	24590-QL-POA-ADDH-00007-01-00011
24590-HLW-AD-HSH-DOOR-00002	Shield Door Decontamination Horizontal	24590-QL-POA-ADDH-00007-02-00069
24590-HLW-AD-HSH-DOOR-00003	Shield Door Maintenance Vertical	24590-QL-POA-ADDH-00007-01-00011
24590-HLW-AD-HSH-DOOR-00004	Shield Door Maintenance Horizontal	24590-QL-POA-ADDH-00007-02-00071
24590-HLW-AD-HSH-DOOR-00005	Shield Door Decontamination Horizontal	24590-QL-POA-ADDH-00007-02-00068
24590-HLW-AD-HSH-DOOR-00006	Shield Door Decontamination Vertical	24590-QL-POA-ADDH-00007-01-00011
24590-HLW-AD-HSH-DOOR-00007	Shield Door Maintenance Horizontal	24590-QL-POA-ADDH-00007-02-00072
24590-HLW-AD-HSH-DOOR-00008	Shield Door Maintenance Horizontal	24590-QL-POA-ADDH-00007-01-00011
24590-HLW-M0-HSH-GB-00001/2	Glovebox	24590-QL-POA-M000-00002-TBD*
24590-HLW-MJ-HSH-MANIP-00002/16	Power Manipulator Breakdown Table (Thru Wall)	24590-QL-POA-MJW0-00002-TBD*
24590-HLW-MJ-HSH-MANIP-00004/17	Power Manipulator Sorting Table (Thru Wall)	24590-QL-POA-MJW0-00002-TBD*
24590-HLW-MJ-HSH-MANIP-00005/6/7/98/9/11/12/13/14/15/18/19/20/21/22	Master-Slave Manipulator (MSM)	24590-QL-POA-MJW0-00003-TBD*
24590-HLW-MJ-HSH-MANIP-00010/23	Power Manipulator Crane Melter Cave	24590-QL-POA-MJW0-00005-TBD*
24590-HLW-MH-HSH-MHAN-00011/55	Decontamination System In Cave Cranes	24590-CM-POA-HDYR-00001-03-00020

Plant Item Number	Title	Vendor Document Number
24590-HLW-MH-HSH-MHAN-00015/67	Hydraulic Power Unit	24590-CM-POA-MZ00-00007-04-00036
24590-HLW-MH-HSH-MHAN-00016/68	Melter Cave Central Vacuum System	24590-CM-POA-M000-00009-01-00002
24590-HLW-MH-HSH-MHAN-00018/59	Equipment Decontamination Turntable	TBD*
24590-HLW-MH-HSH-MHAN-00031/78	Plasma Torch	TBD*
24590-HLW-MH-HSH-MHAN-00032/60	Shield Lid Decontamination Pit	24590-QL-POA-ADDH-00003-01-00030
24590-HLW-MH-HSH-MHAN-00041/57	Parts Washer	24590-CM-POA-HDYR-00001-03-00018
24590-HLW-MH-HSH-MHAN-00044/86	Vessel Transfer Cart Import Winch	TBD*
24590-HLW-MP-HSH-PMP-00001	HSH-TK-00001 Recirculation Pump	24590-CM-POA-HDYR-00001-02-00088
24590-HLW-MP-HSH-PMP-00002	HSH-TK-00002 Recirculation Pump	24590-CM-POA-HDYR-00001-02-00088
24590-HLW-MP-HSH-PMP-00003	HSH-TK-00001 Chemical Injection Pump	24590-CM-POA-HDYR-00001-02-00088
24590-HLW-MP-HSH-PMP-00004	HSH-TK-00002 Chemical Injection Pump	24590-CM-POA-HDYR-00001-02-00088
24590-HLW-MH-HSH-RCVY-00003	Vertical Shield Door Recovery Drive	TBD*
24590-HLW-MH-HSH-RCVY-00004/17	Hydraulic Hose Reel	TBD*
24590-HLW-MH-HSH-RCVY-00005/22	Melter Import Winch	24590-CM-POA-MX00-00001-TBD*
24590-HLW-MH-HSH-RCVY-00006	Horizontal Shield Door Recovery Drive	TBD*
24590-HLW-MH-HSH-RCVY-00008/18	Cable Reeling System Power Manipulator Crane	24590-QL-POA-MJW0-00005-TBD*
24590-HLW-MH-HSH-RCVY-00013/21	Gantry Saw Festoon System Melter Cave 1 Gantry Saw Festoon System Melter Cave 2	24590-CM-POA-MX00-00001-TBD*
24590-HLW-MH-HSH-RCVY-00014/19	Cable Reeling System Main Crane	24590-QL-POA-MJKG-00002-TBD*

Plant Item Number	Title	Vendor Document Number
24590-HLW-MT-HSH-TK-00001/2	Decontamination Tank	24590-CM-POA-HDYR-00001-02-00088
24590-HLW-MT-HSH-TK-00003/4	Pump Support Package Decontamination Tank	24590-CM-POA-HDYR-00001-02-00088
24590-HLW-PY-HSH-REEL-00001/2	Breakdown Area Hoist Air Hose Reel Assembly	24590-CM-POA-MX00-00001-TBD*
24590-HLW-FH-HSH-TOOL-00002	Large Impact Wrench Crane Deployed	TBD*
24590-HLW-FH-HSH-TOOL-00004/52	Canister Grapple	24590-QL-POA-FH00-00001-TBD*
24590-HLW-FH-HSH-TOOL-00009/56	Diamond Wire Saw	TBD*
24590-HLW-FH-HSH-TOOL-00013/57	Fixed Hydraulic Shear	TBD*
24590-HLW-FH-HSH-TOOL-00018/20/23/27/28/30/31/39/40/41/42/43/46	Manual Spray Lance	24590-CM-POA-HDYR-00001-03-00013
24590-HLW-FH-HSH-TOOL-00022/29/30/44/45/48	CO_2 Spray Lance	24590-CM-POA-HDYR-00001-03-00015
24590-HLW-FH-HSH-TOOL-00049	Melter Bus Plug Jack	TBD*
24590-HLW-FH-HSH-TOOL-00062/63	Nut Runner Power Manipulator Deployed	TBD*
24590-HLW-FH-HSH-TOOL-00064/65	Impact Wrench Crane Mounted 12 inch Extension	TBD*
24590-HLW-FH-HSH-TOOL-00069/70	Melter Electrode East/West Thermocouple Alignment Fixture	TBD*
24590-HLW-FH-HSH-TRLY-00003/5	Vessel Transfer Cart MC1 and MC2	TBD*
24590-HLW-FH-HSH-TRLY-00004/6	Shuttle Cart MC1 Shuttle Cart MC2	24590-CM-POA-MX00-00001-TBD*
24590-HLW-DD-HSH-TWDVC-00001/2	Posting Port	24590-QL-POA-M000-00002-TBD*
24590-WTP-AD-30-SWIN-VARIES	32 and 48 inch Shield Windows	24590-QL-ADDP-00001-09-00001

* Note: TBD document numbers will be added to this system design description when available, see 24590-WTP-ATS-MGT-12-0081.

4.2.3.1 Overhead 25 Ton Crane and Power Manipulator Crane Operation

Melter cave operations using the 25 ton crane or power manipulator crane may be conducted from the crane control room (CCR), from an LOI station in either the east or west corridor, or from the crane control panels, as

appropriate. CMA and CDA operation of these cranes may also be controlled from a radio pendant. The CCTV cameras on these two cranes are remotely operated from the LOIs. The 25 ton crane and power manipulator crane are equipped with a collision avoidance system that detects when the power manipulator crane passes underneath the 25 ton crane or vice versa. This system stops crane movement until acknowledged by the operator. These cranes are also equipped with position indication to ensure alignment of the trolley with the horizontal shield door aperture. The power manipulator crane is also equipped with position indication on the slewing hoist to ensure alignment along the north south direction for passing through the aperture. The slewing hoist jib frame is also equipped with whisker switches to slow and stop the crane when operating in close proximity to the interior walls or the equipment shield doors. After melter cave remote handling operations are complete, these cranes may be returned to their designated park position, behind the decontamination area shield doors in the CDA to minimize the accumulated dose and exposure to contamination.

The power manipulator arm motions are controlled by a spring return finger toggle switch box co-located with the LOI or in the CCR. Any and all manipulator motions may be performed simultaneously but are normally conducted one at a time to maintain awareness of relative arm positions. Matched gearing, timing belts and equal shoulder and elbow arm segment lengths ensure the relative world orientation of the arm segment(s) that is not under direct operation remain unchanged. For example, if the upper wrist segment is parallel to the floor, it will remain parallel to the floor during either shoulder or elbow pivot motions. The shoulder, elbow and upper and lower wrist segments are each painted blue on one half (upper) and yellow on the other half (lower), relative to their pivot axis. They are color coded to enable unambiguous motion directions as the entire arm configuration may be anywhere relative to a world coordinate system but the arm segments (thus colors) remain unchanged relative to each other. For example, the instruction to "pivot elbow blue" will be universally understood to rotate the elbow joint in the direction corresponding to the blue side of the elbow segment, regardless of overall world orientation. By comparison, an instruction to "rotate elbow up" could easily be misconstrued if the elbow segment was pointed straight down. In this example, rotating either way would bring the elbow up. Each joint is slip clutch protected to ensure the motor current driving the joint is less than the allowable rated motor current for that joint. A clutch may be slipped by running the joint into a hard stop. Repeated slippage will wear the clutch plate and require maintenance to reset or repair. Grip force is infinitely adjustable up to the full 400 lbs force but adjustment must be made prior to gripping. Set point changes have no affect when the hand is already gripped.

The power manipulator arm upper wrist segment is provided with a camera viewable bubble level as an operational aid to orientate the wrist joint in a level world axis. The wrist rotate joint is equipped with indicators that may be viewed through the wrist mounted camera to align the wrist rotate (thus hand) in a vertical or horizontal plane. The shoulder rotate joint is equipped with a bridge or trolley camera viewable pointer that aligns with a scale on the bottom of the telescopic mast to align the arm parallel or perpendicular to the bridge, and thus the overall melter cave. These operational aids are provided to allow positioning of the parallel finger hand in the orientation most commonly used for flexible jumper connector operations, i.e. wrist level, hand horizontal and arm orientation perpendicular to an inside cave wall.

4.2.3.2 Breakdown Area Hoist Operation

The breakdown area hoist vertical motion is locally operated through a hard wired pendant from the +3 ft west operations platform out cave of the breakdown area. The hoist is air powered for simplicity with air supplied to the hoist from a spring rewind air hose reel connected to a flexible air hose jumper routed through a wall joggle. The control pendant is wired to an out-cave electric over air remote control panel which provides control signals through a wall joggle and flex coil cord jumper to the trolley mounted solenoid valves for hoist vertical control. Bridge and trolley motions are accomplished by towing (or pushing) the bridge or trolley with the breakdown area HPM. Tow cables with stop balls are provided on the bridge and trolley for towing purposes. The operational intent with the HPM is to close the hand around the tow cable at the hand pipe notch location and let the tow cable

slide through the notch until the stop ball contacts the sides of the hand. The forklift style combination bearings on the bridge end truck prevent binding of the bridge in the profiled rails due to eccentric towing conditions that may arise. All motions are performed under direct observation through either of the two shield window in the breakdown area. A CCTV camera mounted on the north wall of the breakdown area provides an orthogonal view of the hoist operations. The CCTV camera view may be monitored on the LOI station located on the +3 ft west operations platform.

4.2.3.3 Decontamination Area Crane Operation

The decontamination area crane may be operated from out-cave or from within the CDA if conditions permit a personnel entry. Unlike the main process cranes, the decontamination area crane is not controlled through the ICN. All crane motions including tool power operation are controlled by a radio pendant but all crane mounted CCTV cameras are ICN controlled. Hence, full remote operation of this crane requires the operator to be located at the +3 ft west or +22 ft 3in. east out-cave LOI station to obtain camera control and viewing capabilities. However, some operations with the decontamination area crane hook operating within the CDA or within the decontamination pit may be accomplished via direct observation through the shield windows.

4.2.3.4 Lifting Devices and Storage Racks Operation

The adjustable span lifting beams are all designed to have their span adjusted with the power manipulator deployed nut runner and the 1 in. nominal across flats socket equipped with a torque limiter. Alternatively, the power manipulator wrist rotate motion may be used for shorter or finer span adjustments. Each ASLB is equipped with fixed scales on the top and sides to allow pointer viewing with the 25 ton crane CCTV cameras while span adjustment is made. The indicators are set to measure the inside span of the hooks to + 1/8 – 0 in. with 1 in. incremental markings. All span adjustments may be performed with the ASLBs on their storage rack. As the power manipulator wrist rotate output torque may exceed the lifting beam rated input torque, the end stops of the adjustment range should not be contacted if adjusting with the wrist rotate motion as jamming of the drive screw or travelling nuts may occur. However, the full 35 ft-lb torque of either the power manipulator wrist rotate or the power manipulator deployed nut runner may be used to reverse the direction of the hook plates from the end stops if they cannot be moved with the normal torque setting.

The discharge chamber lid lifting beam is operated with the power manipulator crane. The beam is engaged to the shoulder hook of the power manipulator and may be trapped to the underside of the hook by inserting a dowel pin through the side cheek plates of the beam bail with a MSM. The bail is trapped to the manipulator shoulder hook as this shoulder hook does not constitute a deep throated hook. The lid lifting beam features an outrigger with a swivel pad grip for steering with the overhead power manipulator arm. Hoisting and travelling with the power manipulator mast removes the potential for swinging the discharge chamber lid and contacting the ceramic heater elements protruding from the bottom of the lid.

The 4½ ton equipment template lifting beam hook side plates are positioned by lifting each side plate with an overhead crane and moving the hook plate laterally along the beam while viewing through the crane or CDA CCTV cameras. Nominal inside span settings of 34 , 43, 50 and 54 inches are provided. The actual inside span measurement exceeds the nominal by 1/8 Inch.

The main structures of the melter cave and crane decontamination area storage racks are remotely removable to allow replacement or off-normal overhead crane access to areas below. Removal of the northern melter alleyway and breakdown area false floor panels can be performed with the melter cave ASLB storage rack in place. However, the melter cave ASLB and hook adapter storage racks may need to be temporarily removed for overhead crane access to the breakdown hoist air hose reel and portions of the central vacuum system network directly underneath the racks.

4.2.3.5 Posting Port and Glovebox Operation

The posting port and glovebox form an integrated shielding and containment unit that allows equipment to be imported and exported from the melter cave. Export of items is subject to radiation dose threshold limits. The glovebox and posting port are locally controlled via an out-cave panel located at or near the glovebox. The controls allow fully automatic or sequence step-by-step operation. Items are imported into the glovebox through an airlock and set onto the transfer tray for import into the cave. With the out-cave shield door closed, the in-cave shield doors are opened and the tray is advanced into the posting port liner. The in-cave shield doors close, the out-cave shield door opens and the tray is further advanced into the cave for item retrieval with an adjacent MSM or the overhead power manipulator crane. Export of items from the cave is the reverse sequence except that the radiation gamma dose rate is checked when the transfer tray is within the posting port liner and both the in-cave and out-cave shield doors are closed. If the dose rate is within limits, the out-cave shield doors are opened and the transfer tray is withdrawn into the glovebox. If the threshold limit is exceeded, the tray can only be advanced back into the melter cave. The transfer tray can carry items 17 by 17 by 8 inches in size and 100 lbs in weight. Items may be maintained in the glovebox for export back into the cave or withdrawn from the airlock through the bag out port. The glovebox and viewing windows provide a ½ in. steel equivalent shielding. Contamination control is maintained through HEPA filtered air flow into the glovebox from the C2 corridor. The cascade airflow is extracted into the C5 melter cave through a 4 in. joggle pipe that connects the glovebox to the melter cave. The joggle pipe is also the free flowing drain path for the wet sprinklers installed in the airlock chamber and glovebox chamber. Interlocks prevent both the airlock doors and the in-cave and out-cave shield doors from being opened simultaneously.

4.2.3.6 Crane Horizontal and Vertical Shield Doors Operation

The horizontal and vertical equipment shield doors provide shielding and an engineered air gap for contamination control between the CMA and CDA, or CDA and melter cave. The horizontal shield door is supported by wheels and a rail on the bottom of the door and guided at the top in a track on the bottom of the vertical shield door and a track mounted on the south walls of the CMA and CDA. The vertical shield doors are suspended from two drive screws and thrust bearings located on a common machine base mounted on the roof above the CMA and CDA. The vertical doors are guided along a hardened rail at both side edges by guide rollers.

The horizontal shield doors are driven by a planetary roller drive screw and nut coupled to an electric brake motor through an inline helical gear motor and clutch. The clutch allows the drive to be disengaged for door recovery operations. The brake is fail-safe; it engages upon loss of power. The drive components are mounted on a common drive support table located within, and adjacent to either the decontamination area horizontal shield door or the maintenance area horizontal shield door. The vertical shield doors operate vertically through two planetary roller screws with dual roller nuts that are engaged to two worm gear drives that are driven by a center worm gear drive and a single electric brake motor. There is an electro-solenoid rotor disc brake mounted on each screw shaft underneath the worm gear drive that stop and hold the screw shaft during normal operations and design basis events. The brake motor serves as a back-up holding brake to the main screw mounted brakes should they be inadvertently released. The lead screw brakes are controlled by the relay logic of the door control system. They are engaged whenever the door control system stops the motor, a drive fault of any kind occurs or a screw mounted over-speed switch activates.

Both the vertical and horizontal shield doors are remotely controlled through the ICN or from the motor control centers. The vertical shield doors may also be locally controlled from their respective local control panels. Each door is equipped with two proximity switches for indication of open and closed position.

4.2.3.7 Decontamination Pit Shield Lid Operation

The decontamination pit shield lids utilize the System HSH hydraulic power units and network for operation. To operate the shield lids, at least one of the HPUs must be operating in run mode and the valves between the shield lid out-cave control panel and the HPU pressure and tank lines are open. The decontamination pit shield consist of three separate lid sections each driven by one hydraulic cylinder. The lids move independently so as not to bind against each other but raise and lower together with some possible minor lead or lag between them. Control may be done remotely through the ICN or locally from the out-cave control panel. All control uses signals generated by three closed proximity switches and two open proximity switches. A hydraulic pressure enable switch is provided to ensure adequate hydraulic pressure for lid operation. If normal hydraulic pressure is lost, the lids may be remotely lowered by supplying hydraulic pressure from a hand pump or similar device to the cross over pilot operated check valves through the out-cave recovery connection point in the panel.

4.2.3.8 Hydraulic Power Manipulator Operation

The breakdown area hydraulic power manipulator (HPM) and the sorting area HPM are identical in design and operation. As such, discussion will be in the singular content. The HPM is provided with a hydraulic interface cabinet and a command console. The hydraulic cabinet is hose connected to the hydraulic power unit through the hydraulic network. It is equipped with a pressure relief valve, an accumulator, a filter and a pressure enable switch. Both hydraulic interface cabinet and command console are located out-cave to allow remote operation and maintenance access.

When the command console is powered on, it performs a series of operational checks to ensure operating parameters such as pressure and filter status are within margins and that the arm position is established. The command console is equipped with an industrial computer chassis, operator interface keyboard and monitor display, three dead-man joysticks, and various command and control pushbuttons. The operator interface provides three operating modes for the HPMs; global, tool and resolved joint motion. Global mode provides movement in a fixed coordinate frame relative to the arm base. In global mode, the operator commands the hand direction via the joysticks and the kinematic algorithm automatically controls the arm joints to move the hand in the desired direction. Tool mode provides movement relative to the current joint position. In the tool (also referred to as axis) mode, one axis is locked in any spatial direction and the kinematic algorithm automatically controls the arm joints to move the hand along the locked axis per operator commands. This mode is particularly useful for drilling a hole or making a straight cut as a linear path may be set and followed. Resolved joint mode provides individual control of each joint, with each axis mapped to a joystick axis. The resolved joint mode essentially places each individual joint under direct operator command. This mode is useful if the arm needs be positioned around an obstacle or in a certain orientation. Teach and repeat functions are programmable, as are zone interlock controls to prevent manipulator crashes. Normal pick and place operations are conducted in global mode where the reverse kinematic solver provides joint solutions for jaw motion. Specific linear paths such as drilling and cutting operations are better conducted in tool mode. Precision tasks or tasks requiring a specific arm and joint configuration around obstacles are best performed in resolved joint mode. The control console is also equipped with a tethered emergency stop button that may be attended by an independent spotter whose function is to monitor arm positions relative to obstacles when the primary operator's attention and focus is on the hand.

4.2.3.9 Central Vacuum System Operation

The central vacuum system is a run on demand system. It may be locally operated from the main control panel located out-cave of the sorting table or from a slave panel located out-cave of the breakdown table. The power manipulator crane is used to retrieve the 25 ft long suction hose from the storage location on the north wall of the melter cave above the vacuum skid. The crane mounted power manipulator or HPM may be used to attach the vacuum tools to the hose and position or maneuver the hose at point of service within the cave. Either the crane

mounted power manipulator or a HPM or MSM may be used to connect the hose end to a connection point on the network. The vacuum network has six connection points within the cave. Two are located along the east wall, two along the west wall and two along the north wall. Both connection points along the north wall service the breakdown area. The upper connection is located overtop of the breakdown table for connection of a (future) fume hood or similar accessory. The lower connection is to the breakdown table itself to for downdraft service. Only one connection point may be in active service at any one time. Sealing dust caps are provided for all connections points except for the downdraft connection on the breakdown table. The downdraft service is enabled by removing the remote plug in the breakdown table located underneath the removable circular grate section. The grate section should be replaced before commencing breakdown operations to reduce the possibility of larger items falling into the chute and plugging the line. Filter and waste basket change out on the vacuum skid are accomplished with the overhead 25 ton and power manipulator crane. The waste basket rests on a slide drawer and connects to the underside of the cyclone separator through a power manipulator lever operated flex joint assembly. Once the lever is raised, the slide drawer may be extended outward into the cave to check the basket contents level or replace the solid waste basket. A reusable gasket assembly is placed on a solid waste basket to provide a seal between the basket and the flex joint assembly. The drawer is equipped with a bracket for stowing the waste basket lid. Three camera viewable vacuum gauges monitor the pressure drop across the roughing and backup filters and the overall system operating vacuum between the cyclone separator and cave environment. The vacuum blower is protected against overheating due to a plug in the network by a vacuum relief valve set at 11 in. Hg. A remotely operable flowmeter assembly may be plugged into any one of the five hose connection points to diagnose if and where a plug in the network is located.

4.2.3.10 Shuttle Cart Operation

The shuttle cart transports equipment between and within the CMA and CDA at elevation +23 ft. It is battery powered to avoid trailing cables from the CMA to CDA and to allow it to be operated in the CDA when the crane maintenance equipment shield doors are closed. The shuttle cart is charged from a battery charging station in the CMA that automatically connects when the shuttle cart is returned to its park position in the CMA. On board electrical battery monitoring equipment provides operator indication of remaining battery charge and alarms if the charge is low. Sufficient reserve charge is maintained to ensure a return trip to the CMA under all loading conditions. The shuttle cart may be operated locally or out-cave with a radio control pendant from the 22 ft 3 in. operating platform on the east side of the crane decontamination area near the LOI station. The shuttle cart is equipped with a plinth set for the equipment stand to allow melter cave process equipment to be carried by the cart and the equipment stand. The cart equipment stand plinths have identical interface features to the other three sets of equipment stand plinths.

4.2.3.11 Decontamination Tank and Pump Support Package Operation

The decontamination tank provides wet decontamination capabilities for melter cave process and mechanical handling equipment. The decontamination tank may be operated in several modes; soak, spray, heating, sparging or chemical injection. Soak mode fills the 3718 gallon tank with the selected plant wash media. The decontamination factor may be increased when soaking by sparging the tank with compressed air injected through the bottom most spray ring. Alternately, the tank contents may be heated by injecting high pressure steam through the bottom spray ring. Spray mode conserves plant wash media and would normally be used for first pass gross decontamination. The spray rings are connected to a centrifugal pump through a common header. The header is equipped with three flow control valves. Once the equipment is set at the appropriate elevation, one of the three spray ring valves are opened to allow plant wash media to partially fill the tank. When the tank is partially filled, one of the three spray ring valves is opened and the recirculation pump is turned on to pump the decontamination media out of the tank and inject it at high pressure through the selected spray ring(s). The uppermost ring contains inward and downward facing nozzles to spray the top of equipment. The second and third rings are joined together through a common riser pipe as are the fourth and fifth ring. Each of these four

rings contains upward, outward and downward facing nozzles to provide complete coverage of the equipment suspended within the tank. If desired, decontamination chemicals may be injected into the pump support package from an out-cave drum station and drum pump. The drum is physically located above the tank flood level, the supply line is check valve equipped and connects to the suction side of the centrifugal pump to prevent backflow. Local control panels for tank operation are located out-cave at the +0 and +14 ft decontamination pit operating elevations. The pump discharge line is equipped with a three way valve that directs discharge to the spray ring header or the radioactive liquid drains system. The three way valve is interlocked to the radioactive drains collection tank (RLD-VSL-00008) to prevent overflow. All decontamination tank and pump support package process and electrical services are provided through remotely replaceable jumpers. Complete flushing and draining to the minimum tank heel level is thus possible.

4.2.3.12 Hydraulic Power Unit Operation

The hydraulic power units provide pressurized fire resistant hydraulic fluid to various System HSH equipment and the System HMH C5 shield door. System HSH is equipped with two identical HPUs that are cross connected to allow either HPU to power any hydraulically powered device on the network. An HPU is normally left in run mode as the unit is equipped with an adjustable run / standby feature that shuts down the main pump and depressurizes the hydraulic network if unused for 30 minutes or more. In run mode, the pressure compensated variable flow main pump delivers pressurized hydraulic fluid as required by the load on the system. In standby mode, the kidney filtration and cooling loop and fixed displacement vane pump remain in automatic operation to maintain system operating temperature and provide continuous filtration. To return to run mode, the operator must position the local hand switch back to run mode. In addition to the normal points of service on the network, hydraulic connections are also provided in the crane maintenance areas to allow operating and testing hydraulically powered devices in the CMAs before returning them to service in the melter caves. The network is equipped with automatic air bleed valves at high points, isolation valves and cross over connection points for system flushing and diagnostics.

4.2.4 Off-Normal Operations

4.2.4.1 Crane Recovery

The overhead 25 ton crane and power manipulator crane are equipped with recovery drives and hydraulically activated jack down wheels that allow recovery of the main hoist or mast, bridge travel and trolley travel drive system. In the event of a complete loss of power, the 25 ton crane may be recovered to the CDA or CMA using a hand winch on the cable reeling system to pull the crane back. The power manipulator crane can only be recovered in this fashion if the trolley is aligned with the horizontal shield door opening and the jib is pointed due south. The decontamination area crane and the slewing hoist on the power manipulator crane are both equipped with wire rope cutters. These cutters may be operated to cut loose a hung up load or recover from a hoist drive failure when the load cannot be set down. The slewing motion drive train of the power manipulator crane's slewing hoist may be overdriven to allow the slewing jib to be configured to pass through the horizontal shield door aperture. Similarly, the power manipulator arm is equipped with slip clutches that may be overdriven to configure the arm in a position suitable for drop off on the arm change fixture. With the mast retracted, the power manipulator arm clears the shield door aperture in the straight down configuration. The breakdown area hoist may be recovered by removing the northern breakdown area false floor panel and lifting the entire bridge and trolley off of the profile rails with the 5 ton adjustable span lifting beam. As the breakdown hoist bridge and trolley motions are manual, no recovery provisions are required for them.

4.2.4.2 Horizontal Shield Door Recovery

The horizontal shield doors are equipped with out-cave recovery extension rods and drives to recover from a drive train failure. These components have been standardized across the WTP. Equipment export to and from the cave is not possible for the duration of this event. The recovery system consists of a recovery plug for each horizontal shield door permanently installed in a standard 10.5 in. liner adjacent to the door, and a mobile out cave recovery drive assembly. The recovery drive assembly will be deployed throughout the facility as required, and is therefore not permanently installed.

The recovery drive assembly consists of an actuator for horizontal motion, and a series of extension rods that are connected one at a time to advance the recovery plug forward until engagement is made with a connection point on the shield door. When connection is made, the drive retracts the extension rods and door until the door is in its closed position.

Figure 4-66 – Horizontal Door Recovery Equipment

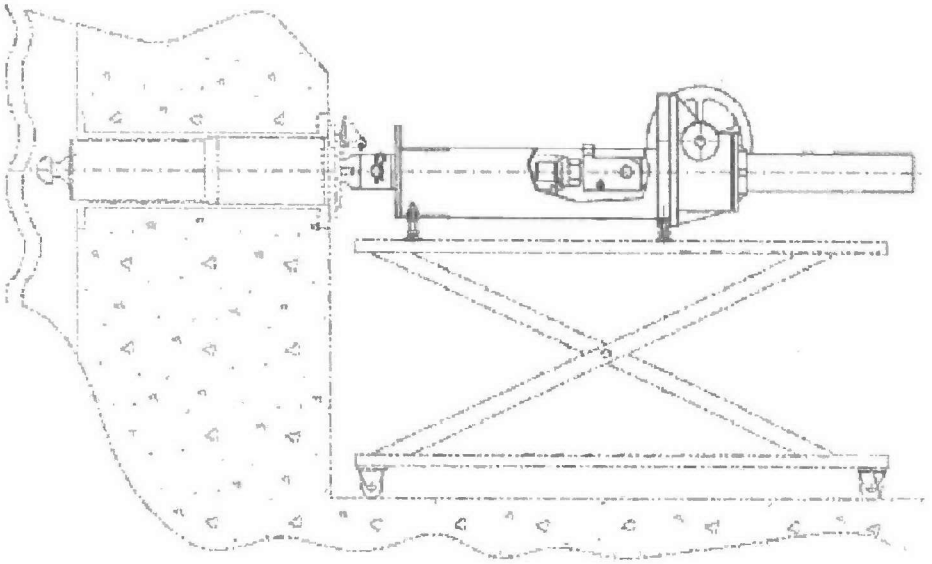

4.2.4.3 Vertical Shield Door Recovery

The vertical shield door recovery system located in C2/C3/R2 areas will be used to close doors that fail in the open position. These components have been standardized across the WTP. The recovery equipment will be installed on the door drive support bridge when required, for example, on the failure of a lead screw, and therefore is not permanently installed. The recovery device will not be purchased until it is needed; therefore, the following briefly describes a proposed system for door retrieval commonly known as a 'Strand Jack'.

A 'strand jack' is a hollow hydraulic cylinder with a set of steel cables (the "strands" in the name) passing through the open center of the jack, each one passing through two clamps – one mounted to either end of the cylinder. The jack operates in the manner of a caterpillar's walk: climbing (or descending) along the strands by releasing the clamp at one end, expanding the cylinder, clamping there, releasing the trailing end, contracting, and

clamping the trailing end before starting over again. The real significance of this device lies in the facility for precision control. The expansion / contraction can be done at any speed, and paused at any location.

The cables of the strand jack will be terminated with a fitting that will interface with 2 mating receivers that perform as lifting points on the door, (each adjacent to the 2 lead screws). The receivers are installed as permanent plant equipment. The cables will require manually guiding through the recovery penetrations in the drive support bridge beam by personnel using a system of poles, viewing can be done from the CCTV camera located in the CMA or CDA to aid final connection. Once the connection has been made between the cables and the lifting points on the door, the strand jack hydraulic unit will be positioned on the bridge, vertical in the line of pull.

Once the weight of the door has been taken through the recovery system, the brakes and other applicable drive train components will be disengaged and the recovery system will be used to lower the door to the closed position, thus allowing maintenance activities to be performed on the door's drive system. The proposed vertical shield door recovery equipment is shown on Figure 4-67.

Equipment exports to and from the cave is not possible for the duration of the event.

For more information see, 24590-QL-POA-ADDH-00007-01-00011, *Manual – Start-Up & Operations Manual – HSH-DOOR-00001, HSH-DOOR-00003, HSH-DOOR-00006, HSH-DOOR-00008.*

Figure 4-67 – Proposed Vertical Shield Door Recovery Equipment

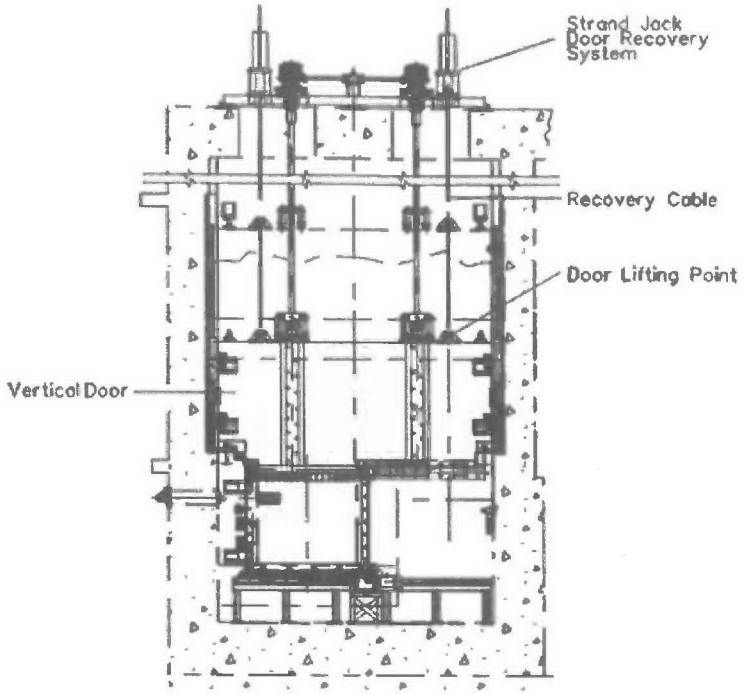

4.2.4.4 Hydraulic Power Manipulator Recovery

The through wall hydraulic power manipulators have an in-cave slave arm lift off feature. The slave arm portion is designed to be remotely removed using the overhead power manipulator crane and power manipulator deployed nut runner. The normal recovery mode for preventative maintenance is to configure the arm with all joints except wrist pivot in a straight out position. The wrist pivot joint is positioned in a straight down orientation. A special purpose lifting beam is attached to the slave arm with the overhead power manipulator. The through wall torso rotate mechanism is disconnected from the out-cave side, then the slave arm is unbolted from the through wall torso rotate mechanism on the in-cave side and lifted. The through wall torso rotate mechanism is equipped with a clamp screw assembly that is operated from out-cave to internally retract and disconnect the hydraulic and electrical connections between the torso rotate mechanism and the slave arm. The torso-to-slave arm hydraulic quick couplings are double shut off dry break connections that minimize fluid leakage and air ingress when disconnected. When disconnected, they hydraulically lock the slave arm in position for subsequent handling.

Figure 4-68 – HPM Slave Arm Lift Beam

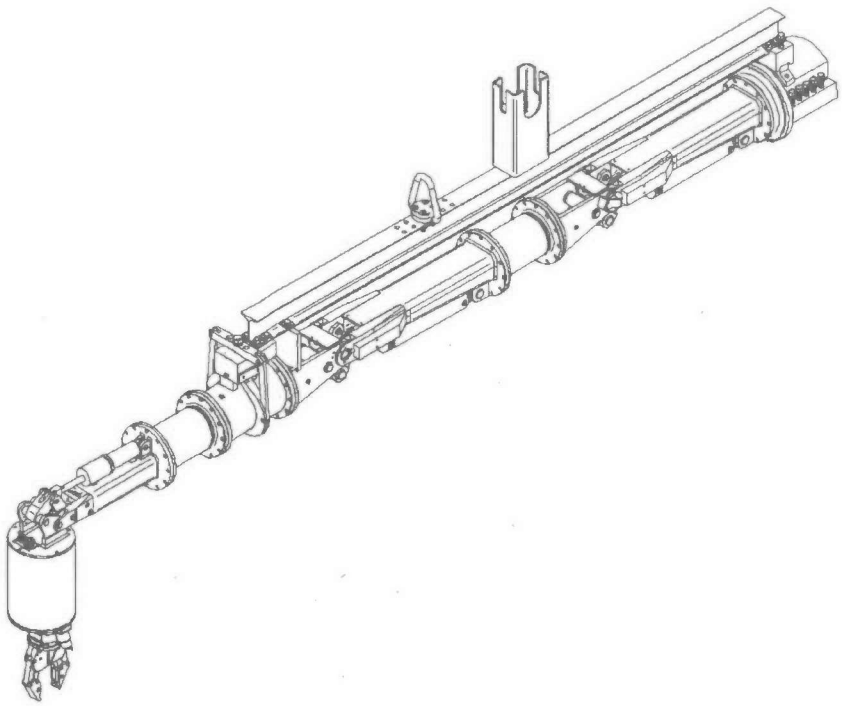

The slave arm and lift beam are then set into a purpose built handling cradle. The lift beam is removed from the slave arm then the arm is locked into position in the cradle. The cradle is then upended and removed from the melter cave. The arm and handling cradle are designed to be set into the equipment maintenance stand or into the equipment decontamination turntable for spray lance decontamination prior to hands on maintenance. Alternatively, the arm and cradle may be set into the agitator cutout on the false floor storage panel for interim storage. The cradle is also equipped with forklift pockets for importing the arm into the C2/C3 airlock via forklift.

Figure 4-69 – HPM Slave Arm Handling Cradle

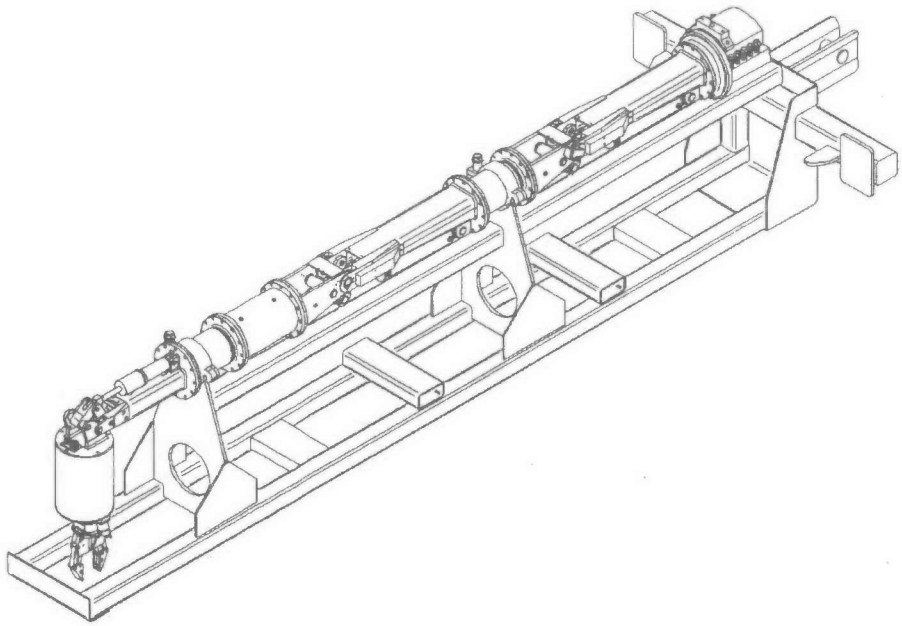

If the slave arm requires recovery from a hydraulic hose or joint control failure, where the normal recovery position cannot be established, the arm control is set to a "limp" mode whereby all cylinders are depressurized and opened to allow free draining to the hydraulic power unit tank. With the arm limp, special purpose slings or hooks may be rigged with adjacent MSMs for lifting of the slave arm with the overhead power manipulator crane and 25 ton overhead crane. The through-wall portion is extracted with dedicated extraction equipment. Spare hydraulic penetrations into the crane maintenance area are provided for connection and testing of the slave arm following maintenance. The command console is equipped with an Ethernet connection to allow remote system diagnostics to be performed by the original equipment manufacturer from an off-site location.

4.2.4.5 Master Slave Manipulator Recovery

The slave arms are removed in-cave with the slewing hoist of the crane mounted power manipulator. Once removed, they are transferred to the slave arm stand within the CDA and decontaminated for export to the MSM workshop. Slave arm removal in the decontamination pit requires the use of a powered offset lifting beam. The through wall portion is extracted with the supplied extraction equipment into the C2 corridor. Replacement of slave arm is reversal of removal. The master arm and the through-wall portion of the manipulator are removed into the corridor. The master arm is first rotated into a horizontal orientation, an MSM removal cart is then used to remove the arm. The wheeled cart is equipped with a horizontal table that is jacked vertically upwards to the master arm. The arm is located onto the table and secured. The master arm is then disconnected from the through-wall portion and lowered back to the floor level transport position.

Removal of the through wall portion of the MSM is achieved by raising the table to align with the through wall. A horizontally sliding connection assembly is fastened to the out-cave flange of the through wall portion. Once

connected, the sliding assembly is actuated by a hand wind mechanism, until the through wall assembly is withdrawn from the through wall liner and secured to the table. The table may now be lowered back to the floor level transport position.

Figure 4-70 – MSM Removal Cart

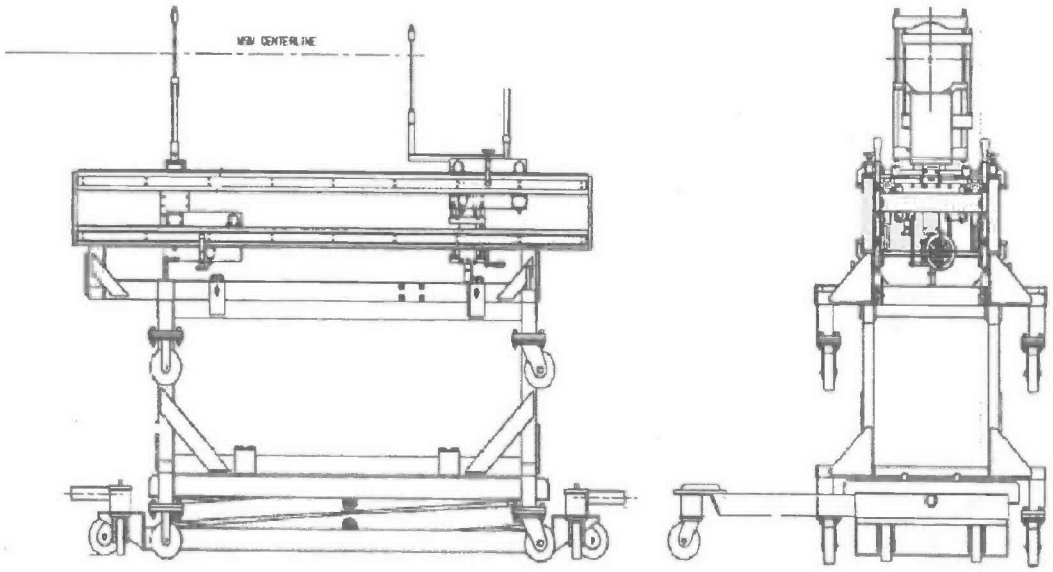

4.2.4.6 Vacuum System Recovery

The central in-cave vacuum system has been designed to diagnose and recover from a plugged line in the piping network. The network is made up of individual pipe sections that are joined with power manipulator operated slip joints. Normal operation of the vacuum system may capture debris that plugs a line in the network. As there are multiple intake ports along two headers within the network, a diagnostic flow meter that couples to any of the pick-up points, except the breakdown table downdraft port, allows for quick location of the plug. Recovery is to remove the section of plugged pipe and lance or rod it to remove the plug. Recovery from high pressure drop across either filter is to replace the filter. Pressure gauges connected across the filters with remotely operable quick connectors are supplied for diagnostic purposes. The vacuum skid may be removed from its normal operating position and set on the breakdown table for in-cave replacement of the cyclone separator, pressure gauges, filter housings, blower and motor or slide table.

4.2.4.7 Decontamination Tank Spray Ring & Pump Support Package Recovery

The decontamination tank spray ring is jumpered to allow removal and replacement in the event that the control valves, thermocouple or level detection equipment fail or the spray nozzles deteriorate. The pump support package is jumpered to allow removal and replacement in the event of pump or three way valve failure. The pump support package is equipped with removable panels to allow interior wash down within the decontamination pit. The spray ring portion and pump support package both interface with the 4 ½ ton equipment template lifting beam. The counterweight supplied with the central vacuum system must be used to remove the pump support package.

4.2.4.8 Fixed or Portable Shear Recovery

The fixed shear is normally mounted on a permanent bracket along the east wall. The portable shear is a power manipulator deployed tool. With the exception of the permanent mounting bracket for the fixed shear, both shears may be completely removed from the cave for decontamination and hands on maintenance. Both shears are connected to the out-cave hydraulic power unit through hydraulic hose jumpers. The portable shear also uses the hydraulic hose reel to provide full cave coverage. The downstream flow point in the jumper is equipped with a fixed orifice that chokes flow. If a supply pressure hose fails, the orifice function is lost and flow increases. An out-cave velocity fuse automatically detects the flow increase and closes the supply line to the shear. To recovery from a stuck blade, the shears are equipped with a four way, three position valve with the center position connecting both sides to tank. Hence, in the center control valve position, the blade cylinder is hydraulically balanced and may be freed by working the tool loose with the crane mounted power manipulator. A jammed blade may also be recovered by increasing the supply line pressure from its normal set point of 3000 psi up to 3500 psi.

4.2.4.9 Decontamination Pit Shield Lid Recovery

The decontamination pit shield lids utilize hydraulic backpressure and gravity to close and hydraulic cylinders to open. To prevent runaway lowering of the lids from a hose failure, the lid cylinders are equipped with cross over pilot operated check valves. The check valves require pilot pressure from the upstream side to crack the check valve on the downstream side of the cylinder. If the lid hydraulics experiences a failure when fully open, the pit can be de-inventoried prior to entry into the CDA for hands on maintenance. If the lid hydraulics fail in the closed position, the decontamination pit contents are now shielded and a contact maintenance entry can be made into the CDA to effect repairs. If a lid hydraulic hose experiences a failure in the partly open position, a recovery hydraulic fluid jacking point is provided in the out cave cabinet to allow the lids to be lowered to the closed position.

4.2.4.10 In-Cave (Wall Mounted) Lights Failure

The melter cave wall mounted lights are remotely removable and replaceable by utilizing the overhead power manipulator. Remote maintenance is required to replace the bulbs as they are not specified for a 40 year design life. Remote repairs are conducted on the false floor panels with MSMs and a light maintenance fixture.

4.2.4.11 Process Equipment Failure

System HSH has the ability to bring the melter cave to an empty cave condition. As such, any remotable piece of equipment that fails can be recovered and replaced to continue normal production. Redundancy of equipment and the ability to replace failed components aid in the reduced impact on throughput.

4.2.4.12 Unplanned Extended Maintenance Period

System HSH is able to service and maintain the HLW melter in an idle state in the event of an unplanned extended maintenance outage of a replaceable component. If a component that affects throughput fails, like an ADS pump or agitator, the melter will be placed in an idle state. Melter consumables and jumpers may continue to be serviced by System HSH while maintenance is being conducted on the failed part.

4.2.4.13 Loss of Electrical Power

4.2.4.14 On loss of offsite electrical power, normal export procedures shall be discontinued and all crane operations shall cease in a failsafe manner. Design Basis Event

System HSH is required to survive a DBE to the extent that no SSC will present a hazard of exposure to facility workers or the general public. Normal System HSH operations are not expected to continue during or after a DBE.

4.2.5 System Shutdown

There are no automated ICN control sequences associated with the equipment in the HSH system. Each piece of ICN controlled equipment, for example shield doors, cranes etc, are operated autonomously from the LOI with each machine movement being operator initiated.

4.2.6 Safety Management Programs and Administrative Controls

Reserved

4.3 Testing and Maintenance

4.3.1 Reserved Temporary Configurations

4.3.2 Reserved TSR-Required Surveillances

4.3.3 Reserved Non-TSR Inspections and Testing

4.3.4 Reserved Maintenance

Specific maintenance requirements for each piece of equipment will be established by a detailed review of equipment design and system application. Seller recommendations, operational experience and consequences of failure will influence final maintenance requirements. System HSH equipment is designed for both remote, and hands on recovery and maintenance. The following sections provide a general approach to all melter cave equipment and some maintenance features and a suggested approach to maintain certain major equipment. For equipment requiring decontamination prior to hands on maintenance, the actual maintenance procedures will entirely depend upon the decontamination factor and subsequent conditions encountered.

4.3.4.1 General Maintenance Approach

The melter cave is classified as C5/R5 once radioactive hot operations begin. As no access to this area is possible, all melter cave mechanical handling equipment (except for permanently mounted wall brackets and floor plinths) is designed for either remote recovery (i.e. main crane and power manipulator crane) or remote removal. Large and high value items will be decontaminated and moved to the crane maintenance area. Small, low value items such as manipulator deployed in-cave tools may be decontaminated for disposal only as maintenance on these easily replaceable items may not be warranted. Generally, in-cave tools are commercially available equipment that has been modified for remote handling. However, some equipment that is of higher value, (i.e. central vacuum system, fixed shears, large impact wrench) is designed for limited remote maintenance and for certain components to be exported through the posting port for glove box maintenance or to the decontamination pit for further decontamination followed by hands on maintenance.

As much of the in-cave mechanical handling components are structural in nature (i.e. templates, lifting beams, floor panels, etc.) and are designed for the 40 year facility life, no maintenance is envisioned. However, the

recovery pathway for all System HSH equipment except for the vessel transfer cart is through the crane decontamination area and / or equipment decontamination pit. Following decontamination, equipment requiring maintenance may be exported to a C3 workshop or maintained within the shielded crane maintenance area.

Entry into the crane maintenance area is access controlled at the point of entry for ALARA reasons and to prevent inadvertent entry. Access to the crane maintenance area is only possible through the 23 ft and 58 ft sub-change rooms and their respective shielded personnel access doors. The crane decontamination area can only be accessed from the CMA at the elevation +58 ft platform through the SPAD and at floor elevation +23 ft through the crane maintenance area horizontal shield door. All SPADs may be physically padlocked and all shield drive motors may be electrically locked out to maintain access control and prevent inadvertent entry. However, the SPADs and / or maintenance area horizontal shield door must remain open when personnel are present to allow rapid evacuation. Access to either area depends upon the radiological conditions of the area. Breathing air is supplied to the elevations +23 ft and +58 ft CMA sub-change rooms and may be used to support entry into the maintenance and decontamination areas as required.

4.3.4.2 Specific Maintenance Approach

4.3.4.2.1 Maintenance of the Main Crane and Power Manipulator Crane

The main crane and power manipulator crane can be remotely decontaminated to allow personnel entry into the crane decontamination area for further manual decontamination. Routine inspections and maintenance on the overhead main crane and power manipulator crane may be performed in either the crane decontamination or the crane maintenance area. Both the crane decontamination area and the crane maintenance area contains platforms allowing access to the cranes, however, the CMA platforms provide superior access. Bridge and trolley wheel modules are sealed for life and do not require regular lubrication. Gearboxes are also sealed for life but will require routine gear oil replacement. To facilitate maintenance activities, the main components (for example wheel assemblies) are modular in design, and quick release connectors have been used for cabling connections. The power manipulator arm can be remotely disconnected from the mast for decontamination and export. MSM installed sealing caps and plugs for the mast and arm electrical connection are provided. A hand change out fixture allows the entire hand to be remotely dropped off before exporting the manipulator from the cave. Major components of both cranes such as hoist drive assemblies can be removed with the overhead maintenance crane and lowered onto the shuttle cart for hands on maintenance. Hoist drive or trolley removal would require prior disassembly of the components. When not in use the cranes will be parked in the decontamination area to avoid unnecessary exposure in the R5 cave.

4.3.4.2.2 Maintenance of the Main Crane and Power Manipulator Cable Reels

Both the main crane and power manipulator crane are equipped with through wall cable reel assemblies that place all electrical slip ring assemblies out-cave. This allows electrical trouble shooting and slip ring brush replacement manually in the C2 corridors. The mono-spiral cable and spool can be entirely replaced in the C3 crane maintenance area with provided cable reel replacement carts. The carts are designed to be imported into the CMA through the floor hatch. The electrical connections from the slip ring assembly to the mono-spiral cable are quick connects.

4.3.4.2.3 Maintenance of the Breakdown Area Hoist

The breakdown area hoist is designed to be remotely removed from the bridge and for steam lance decontamination. The bridge assembly end truck wheel modules are designed for remote replacement. The hoist itself can be maintained in the CMA or exported to the C3 workshop for maintenance.

4.3.4.2.4 Maintenance of the Horizontal and Vertical Shield Doors

The vertical shield doors have all motor and gearbox drive components located out-cave for hands on maintenance. Vertical shield door drive screws and guide rollers, located within the CDA or CMA, are manually replaceable when the door is in the closed position. The horizontal shield door drive components, due to necessity, are also located within the room. All horizontal shield door drive components are located on a waist level drive support table located adjacent to the door. As the decontamination area horizontal shield door drives are designed to endure wash down due to the local room environment, they may undergo in-situ hands on maintenance following decontamination.

4.3.4.2.5 Maintenance of the Decontamination Pit Shield Lids

The decontamination pit shield lids have the hydraulic cylinders located within the CDA above the pit where they are readily accessible for manual removal. With the exception of the interconnecting hoses and cylinder ported hose break and pilot operated check valves, all other hydraulic components are located out-cave for hands on maintenance. Once removed, the cylinder would be exported to the C3 workshop or simply replaced.

4.3.4.2.6 Maintenance of the Posting Port

The components of the posting port that are in the through wall portion are all designed to be extracted back into the glovebox. The posting port tray drive motors are located within the glovebox itself. Locating components within the glovebox allows for gloved maintenance or for export from the glovebox airlock for hands on maintenance in the C3 workshop.

4.3.4.2.7 Maintenance of the Hydraulic Power Manipulators

The breakdown and sorting table hydraulic power manipulators have the command console and all hydraulic valves including the servo valves located out-cave. The slave arm, by necessity, has the hydraulic cylinders, hoses, and position feedback encoders mounted on it. The HPMs are designed to have the slave arm remotely removed with a dedicated lift beam and the overhead power manipulator crane. Once removed, the slave arm is set into an arm cradle that is designed to hang from the decontamination turntable for spray lance decontamination of the slave arm after a MSM installed sealing cap is installed over the hydraulic / electrical arm connection. As maintenance of these devices would be performed in the crane maintenance area, the crane maintenance area has been provided with hydraulic connection points to allow testing of hydraulically powered devices such as these manipulators before returning to service in the melter cave.

4.3.4.2.8 Maintenance of the MSMs

The MSM slave arm is designed for remote removal with the overhead power manipulator crane. A purpose built decontamination stand is provided to allow placing the slave arm into the decontamination tank for remote spray decontamination. A finger change fixture is provided to remotely remove the fingers before exporting the slave arm from the cave. Maintenance of the MSM is performed in the dedicated C3 MSM workshop.

4.3.4.2.9 Maintenance of the Hydraulic Power Units

The hydraulic power units are situated out-cave. As such, all maintenance may be performed manually. Pressure and return line filters should be checked for indication of radiation as these are natural accumulation points for contamination that entered the system. Contamination in the filters could indicate a breach in a cylinder boot and, possibly a head end cylinder rod O-ring leak. Routine filter change out and a hydraulic fluid maintenance regiment are required to ensure longevity of the hydraulic power unit and all hydraulically powered devices. The hydraulic reservoir is equipped with clean out provisions and the entire network may be flushed through the cross-over connection points.

4.3.4.2.10 Maintenance of the Decontamination Tank Spray Ring Assembly and Pump Support Package

The internal spray ring of the decontamination tank and the pump support package are designed for remote removal and replacement. The spray ring assembly contains three electrically actuated valves, tank level and temperature instrumentation and spray nozzles that may wear over time. The spray ring assembly can be spray lance decontaminated within the decontamination pit and hoisted into the CDA for hands on maintenance. The pump support package contains the centrifugal pump and three way valve. The pump support package may also be decontaminated and hoisted into the shielded CDA for hands on maintenance.

4.3.4.2.11 Maintenance of the Shuttle Cart

The shuttle cart has been designed for decontamination and hands on maintenance within the CMA. It is modular in design and allows rapid access to the batteries for removal and replacement. The drive components are modular and utilize quick connect power plugs. Specific allowances for maintenance with gloved hands have been provided. The entire cart is capable of being hoisted from either end for export through the CMA floor hatch.

4.3.4.3 Maintenance Manuals

Preventive maintenance, corrective maintenance and in-service inspections are detailed in the vendor operating and maintenance manuals. Vendor supplied maintenance and operating manuals for major pieces of equipment are listed in Table 4-5.

Table 4-5 – Maintenance Manuals

Plant Item Number	Title	Vendor Document Number
24590-HLW-MJ-HSH-CRN-00001	Main Crane Melter Cave 1	24590-QL-POA-MJKG-00002-TBD*
24590-HLW-MJ-HSH-CRN-00010	Maintenance Crane Decontamination Area Melter Cave 1	24590-CM-POA-MJKG-00002-51-00016
24590-HLW-MJ-HSH-CRN-00011	Maintenance Crane Maintenance Area	24590-CM-POA-MJKG-00002-51-00013
24590-HLW-MJ-HSH-CRN-00012	Maintenance Crane Decontamination Area Melter Cave 2	24590-CM-POA-MJKG-00002-51-00017
24590-HLW-MJ-HSH-CRN-00013	Maintenance Crane Maintenance Area	24590-CM-POA-MJKG-00002-51-00015
24590-HLW-MJ-HSH-CRN-00014	Main Crane Melter Cave 2	24590-QL-POA-MJKG-00002-TBD*
24590-HLW-MJ-HSH-CRN-00015	Maintenance Pit Jib Crane Melter Cave 1	24590-CM-POA-MX00-00001-TBD*
24590-HLW-MJ-HSH-CRN-00016	Maintenance Pit Jib Crane Melter Cave 2	24590-CM-POA-MX00-00001-TBD*
24590-HLW-AD-HSH-DOOR-00001	Shield Door Decontamination Vertical	24590-QL-POA-ADDH-00007-02-00085

Plant Item Number	Title	Vendor Document Number
24590-HLW-AD-HSH-DOOR-00002	Shield Door Decontamination Horizontal	24590-QL-POA-ADDH-00007-02-00067
24590-HLW-AD-HSH-DOOR-00003	Shield Door Maintenance Vertical	24590-QL-POA-ADDH-00007-02-00085
24590-HLW-AD-HSH-DOOR-00004	Shield Door Maintenance Horizontal	24590-QL-POA-ADDH-00007-02-00073
24590-HLW-AD-HSH-DOOR-00005	Shield Door Decontamination Horizontal	24590-QL-POA-ADDH-00007-02-00066
24590-HLW-AD-HSH-DOOR-00006	Shield Door Decontamination Vertical	24590-QL-POA-ADDH-00007-02-00085
24590-HLW-AD-HSH-DOOR-00007	Shield Door Maintenance Horizontal	24590-QL-POA-ADDH-00007-02-00074
24590-HLW-AD-HSH-DOOR-00008	Shield Door Maintenance Horizontal	24590-QL-POA-ADDH-00007-02-00085
24590-HLW-M0-HSH-GB-00001/00002	Glovebox	24590-QL-POA-M000-00002-TBD*
24590-HLW- MJ-HSH-MANIP-00002/00016	Power Manipulator Breakdown Table (Thru Wall)	24590-QL-POA-MJW0-00002-TBD*
24590-HLW- MJ-HSH-MANIP-00004/00017	Power Manipulator Sorting Table (Thru Wall)	24590-QL-POA-MJW0-00002-TBD*
24590-HLW- MJ-HSH-MANIP-00005/6/7/8/9/11/12/13/ 14/15/18/19/20/21/22/24/25/26/27/28	Master-Slave Manipulator (MSM)	24590-QL-POA-MJW0-00003-TBD*
24590-HLW- MJ-HSH-MANIP-00010/00023	Power Manipulator Melter Cave Crane Mounted	24590-QL-POA-MJW0-00005-TBD*
24590-HLW-MH-HSH-MHAN-00011/00055	Decontamination System In Cave Cranes	24590-CM-POA-HDYR-00001-03-00020
24590-HLW-MH-HSH-MHAN-00015/00067	Hydraulic Power Pack	24590-CM-POA-MZ00-00007-04-00037
24590-HLW-MH-HSH-MHAN-00016/00068	Melter Cave Vacuum System	24590-CM-POA-M000-00009-01-00002
24590-HLW-MH-HSH-MHAN-00018/00059	Equipment Decon Area Turntable	TBD*
24590-HLW-MH-HSH-MHAN-00031/00078	Plasma Torch	TBD*
24590-HLW-MH-HSH-MHAN-00032/00060	Shield Lid Decontamination Pit	24590-QL-POA-ADDH-00003-01-00031
24590-HLW-MH-HSH-MHAN-00041/00057	Parts Washer	24590-CM-POA-HDYR-00001-03-00018

Plant Item Number	Title	Vendor Document Number
24590-HLW-MH-HSH-MHAN-00044	Vessel Transfer Cart Import Winch	TBD*
24590-HLW-MP-HSH-PMP-00001	HSH-TK-00001 Recirculation Pump	24590-CM-POA-HDYR-00001-02-00088
24590-HLW-MP-HSH-PMP-00002	HSH-TK-00002 Recirculation Pump	24590-CM-POA-HDYR-00001-02-00088
24590-HLW-MP-HSH-PMP-00003	HSH-TK-00001 Chemical Injection Pump	24590-CM-POA-HDYR-00001-02-00088
24590-HLW-MP-HSH-PMP-00004	HSH-TK-00002 Chemical Injection Pump	24590-CM-POA-HDYR-00001-02-00088
24590-HLW-MH-HSH-RCVY-00003	Vertical Shield Door Recovery Drive	TBD*
24590-HLW-MH-HSH-RCVY-00005	Melter Import Winch	24590-CM-POA-MX00-00001-TBD*
24590-HLW-MH-HSH-RCVY-00006	Horizontal Shield Door Recovery Drive	TBD*
24590-HLW-MH-HSH-RCVY-00008/00018	Cable Reeling System Power Manipulator Crane	24590-QL-POA-MJW0-00005-TBD*
24590-HLW-MH-HSH-RCVY-00013/00021	Breakdown Area Hoist	24590-CM-POA-MX00-00001-TBD*
24590-HLW-MH-HSH-RCVY-00014/00019	Cable Reeling System Main Crane	24590-QL-POA-MJKG-00002-TBD*
24590-HLW-MT-HSH-TK-00001/00002	Decontamination Tank	24590-CM-POA-HDYR-00001-02-00088
24590-HLW-MT-HSH-TK-00003/00004	Pump Support Package Decontamination Tank	24590-CM-POA-HDYR-00001-02-00088
24590-HLW-FH-HSH-TOOL-00002/00050	Large Impact Wrench Crane Deployed	TBD*
24590-HLW-FH-HSH-TOOL-00004	Canister Grapple	24590-QL-POA-FH00-00001-TBD*
24590-HLW-FH-HSH-TOOL-00009/00056	Size Reduction System	TBD*
24590-HLW-FH-HSH-TOOL-00013/00057	Hydraulic Shear Fixed	TBD*
24590-HLW-FH-HSH-TOOL-0018/20/23/27/28/30/31/39/40/41/42/43/46	Manual Spray Lance	24590-CM-POA-HDYR-00001-03-00013
24590-HLW-FH- HSH-TOOL-00022/29/30/44/ 45/48	CO_2 Spray Lance	24590-CM-POA-HDYR-00001-03-00015
24590-HLW-FH-HSH-TOOL-00049	Melter Bus Plug Jack	TBD*

Plant Item Number	Title	Vendor Document Number
24590-HLW-FH-HSH-TOOL-00062/63	Nut Runner Power Manipulator Deployed	TBD*
24590-HLW-FH-HSH-TOOL-00064/65	Medium Impact Wrench Power Manipulator Deployed	TBD*
24590-HLW-FH-HSH-TOOL-00071/00072	Melter Discharge Chamber Heaters Cable Tray	TBD*
24590-HLW-FH-HSH-TRLY-00003	Vessel Transfer Cart	TBD*
24590-HLW-FH-HSH-TRLY-00004/00006	Shuttle Cart	24590-CM-POA-MX00-00001-TBD*
24590-HLW-DD-HSH-TWDVC-00001/00002	Posting Port	24590-QL-POA-M000-00002-TBD*

* Note: TBD document numbers will be added to this system design description when available, see 24590-WTP-ATS-MGT-12-0081.

4.4 Supplemental Information

Reserved

5 References and Design Documents List

5.1.1 Source / Basis References

Document Number	Rev	Title	Text Reference
DE-AC27-01RV14136	N/A	DOE/BNI Contract	WTP Contract
24590-HLW-RPT-ESH-01-001	5	Preliminary Fire Hazards Analysis for the High-Level Waste Building	PFHA
24590-WTP-DB-ENG-01-001	2	Basis of Design	BOD
24590-WTP-PSAR-ESH-01-002-04	5D	Preliminary Documented Safety Analysis to Support Construction Authorization; HLW Facility Specific Information	PDSA
24590-WTP-RPP-ESH-01-001	3	Radiation Protection Program for Design and Construction	RPP
24590-WTP-RPT-OP-01-001	5	Operations Requirements Document	ORD
24590-WTP-SRD-ESH-01-001-02	7	Safety Requirements Document – Volume II	SRD

5.1.2 Other References

Document Number	Rev	Title
24590-HLW-3ZD-HRH-00001	0	HLW Canister Receipt Handling (HRH) System Design Description
24590-HLW-ES-ENG-13-003	0	Risk Reduction Study for the High Level Waste (HLW) Facility: Failure Modes, Effects, and Criticality Analysis (FMECA), In-Service Inspection (ISI), and Plugging
24590-HLW-M6N-ASX-00008	N/A	General Instrumentation Revision to HLW ASX System P&ID (ASX-SMPLR-00029
24590-HLW-M6N-ASX-00010	N/A	General Instrumentation Revision to HLW ASX System P&ID (ASX-SMPLR-00042).
24590-HLW-PL-RT-07-0001	3	IHLW Waste Form Compliance Plan for the Hanford Tank Waste Treatment and Immobilization Plant
24590-HLW-RPT-ENS-12-002	0	HLW Preliminary Post Accident Monitoring Report
24590-HLW-U0D-W16T-00001	1	HLW Room Environment Data Sheet
24590-WTP-3DP-G04B-00004	2	Technical Requirements Management
24590-WTP-3DP-G04B-00046	30	Engineering Drawings
24590-WTP-3DP-G04B-00093	3	System and Facility Design Descriptions
24590-WTP-3PS-JQ00-T0004	1	Management of Supplier Software
24590-WTP-3PS-JQ00-T0005	1	Management of Supplier Safety Software
24590-WTP-GPP-SQP-208	3	Plant Software Life Cycle Management
24590-WTP-J0-50-00012	2	Controls & Instrumentation In-line Flow Devices Straight Run Requirements
24590-WTP-M4C-V11T-00011	C	Revised Calculation of Hydrogen Generation Rates and Times to Lower Flammability Limit for WTP
24590-WTP-M6-50-00008	3	P&ID Symbols and Legend (Sheet 8 of 8)
DOE-STD-1020-94	N/A	Natural Phenomena Hazards Design and Evaluation Criteria for Department of Energy Facilities
DOE-STD-1066-97	N/A	Fire Protection Design Criteria (as tailored in Appendix C of the SRD)
DOE-STD-3024-2011	N/A	Content of System Design Descriptions
24590-HLW-Z0C-W14T-00019	00E	Design Basis Event: HLW Facility Seismic
24590-HLW-Z0C-30-00020	00B	Shielding Requirements for HLW Facility Equipment and Personnel Access Doors
24590-HLW-Z0C-30-00031	00A	HLW and PTF Posting Port Analysis

Document Number	Rev	Title
24590-HLW-Z0C-30-00032	00B	Shielding Analysis of HLW Through-Wall Equipment
24590-HLW-Z0C-30-00034	00A	Analysis of HLW Shielded Equipment Door Frames
24590-HLW-Z0C-30-00041	00A	High Level Waste Shielded Personnel Access Doors and Liners Shielding Adequacy
24590-HLW-N1D-HSH-P0001	000	HSH-TK-00001 & 2 (HLW) – Decontamination Tank Melter Cave 1 and 2
24590-WTP-PL-RACT-RT-0001	000	Remotability Verification Plan
24590-HLW-ES-ENG-14-004	000	Engineering Study to Mitigate Risk Associated with HLW Secondary Waste Generation and Export

5.1.3 System Design Documents

Document Number	Title
Mechanical Sequence Diagrams	
24590-HLW-M1-HSH-00001	Mechanical Sequence Diagram (MSD) for HLW Vitrification System HSH Melter Cave Support
P&IDs	
24590-HLW-M6-DIW-00001002	P&ID – HLW Demineralized Water System Distribution
24590-HLW-M6-DIW-00001004	P&ID – HLW Demineralized Water System Distribution
24590-HLW-M6-HSH-00001	P&ID – HLW Melter Cave Vacuum System Melter Cave 1 System HSH
24590-HLW-M6-HSH-00002	P&ID – HLW Plant Service Air Supply to Melter Cave 1 System HSH
24590-HLW-M6-HSH-00003	P&ID – HLW System HSH Melter Cave 1 Hydraulic System
24590-HLW-M6-HSH-00004001	P&ID – HLW – HLW Melter Cave Support Handling System Decontamination System Melter Cave 1
24590-HLW-M6-HSH-00004002	P&ID – HLW – HLW Melter Cave Support Handling System Decontamination System Melter Cave 1
24590-HLW-M6-HSH-20001	P&ID – HLW Melter Cave Vacuum System Melter Cave 2 System HSH
24590-HLW-M6-HSH-20002	P&ID – HLW HLW Instrument Service Air Supply to Melter Cave System HSH
24590-HLW-M6-HSH-20003	P&ID – HLW System HSH Melter Cave 2 Hydraulic System
24590-HLW-M6-HSH-20004001	P&ID – HLW – HLW Melter Cave Support Handling System Decontamination System Melter Cave 2
24590-HLW-M6-HSH-20004002	P&ID – HLW – HLW Melter Cave Support Handling System Decontamination System Melter Cave 2
24590-HLW-M6-HSH-P0004	P&ID – HLW System HSH Melter Cave 1 Decontamination System
24590-HLW-M6-HSH-P20004	P&ID – HLW System HSH Melter Cave 2 Decontamination System
Mechanical Handling Diagrams	
24590-HLW-M7-HSH-00001001	HLW Vitrification System HSH Mechanical Handling Diagram Melter Cave Support Handling Melter Cave 1
24590-HLW-M7-HSH-00001002	HLW Vitrification System HSH Mechanical Handling Diagram Melter Cave Support Handling Melter Cave 1
24590-HLW-M7-HSH-00001003	HLW Vitrification System HSH Mechanical Handling Diagram Melter Cave Support Handling Melter Cave 1
24590-HLW-M7-HSH-00001005	HLW Vitrification System HSH Mechanical Handling Diagram Melter Cave Support Handling Melter Cave 1

Document Number	Title
24590-HLW-M7-HSH-00002001	HLW Vitrification System HSH Mechanical Handling Diagram Melter Cave Support Handling Melter Cave 2
24590-HLW-M7-HSH-00002002	HLW Vitrification System HSH Mechanical Handling Diagram Melter Cave Support Handling Melter Cave 2
24590-HLW-M7-HSH-00002003	HLW Vitrification System HSH Mechanical Handling Diagram Melter Cave Support Handling Melter Cave 2
24590-HLW-M7-HSH-00002005	HLW Vitrification System HSH Mechanical Handling Diagram Melter Cave Support Handling Melter Cave 2
General Arrangement / Equipment Location Drawings	
24590-HLW-P1-P01T-00001	HLW VITRIFICATION BUILDING GENERAL ARRANGEMENT PLAN AT EL -21'-0"
24590-HLW-P1-P01T-00002	HLW VITRIFICATION BUILDING GENERAL ARRANGEMENT PLAN AT EL 0'-0"
24590-HLW-P1-P01T-00003	HLW VITRIFICATION BUILDING GENERAL ARRANGEMENT PLAN AT EL 14'-0"
24590-HLW-P1-P01T-00004	HLW VITRIFICATION BUILDING GENERAL ARRANGEMENT PLAN AT EL 37'-0"
24590-HLW-P1-P01T-00005	HLW VITRIFICATION BUILDING GENERAL ARRANGEMENT PLAN AT EL 58'-0"
24590-HLW-P1-P01T-00006	HLW VITRIFICATION BUILDING GENERAL ARRANGEMENT PLAN AT EL 72'-0"
24590-HLW-P1-P01T-00007	HLW VITRIFICATION BUILDING GENERAL ARRANGEMENT PLAN AT EL 91'-0"
24590-HLW-P1-P01T-00008	HLW VITRIFICATION BUILDING GENERAL ARRANGEMENT SECTIONS A-A, B-B & C-C
24590-HLW-P1-P01T-00009	HLW VITRIFICATION BUILDING GENERAL ARRANGEMENT SECTIONS D-D, E-E & F-F
24590-HLW-P1-P23T-00004	HLW Vitrification Building Equipment Location Plan El. -21'-0"/Area 4
24590-HLW-P1-P23T-00005	HLW Vitrification Building Equipment Location Plan El. -21'-0"/Area 5
24590-HLW-P1-P23T-00009	HLW Vitrification Building Equipment Location Plan El. -21'-0"/Area 9
24590-HLW-P1-P23T-00010	HLW Vitrification Building Equipment Location Plan El. -21'-0"/Area 10
24590-HLW-P1-P23T-00014	HLW Vitrification Building Equipment Location Plan El. -21'-0"/Area 14
24590-HLW-P1-P23T-00015	HLW Vitrification Building Equipment Location Plan El. -21'-0"/Area 15
24590-HLW-P1-P23T-00104	HLW Vitrification Building Equipment Location Plan El. 0'-0"/Area 104
24590-HLW-P1-P23T-00105	HLW Vitrification Building Equipment Location Plan El. 0'-0"/Area 105
24590-HLW-P1-P23T-00109	HLW Vitrification Building Equipment Location Plan El. 0'-0"/Area 109
24590-HLW-P1-P23T-00110	HLW Vitrification Building Equipment Location Plan El. 0'-0"/Area 110
24590-HLW-P1-P23T-00114	HLW Vitrification Building Equipment Location Plan El. 0'-0"/Area 114
24590-HLW-P1-P23T-00115	HLW Vitrification Building Equipment Location Plan El. 0'-0"/Area 115
24590-HLW-P1-P23T-00204	HLW Vitrification Building Equipment Location Plan El. 14'-0"/Area 204
24590-HLW-P1-P23T-00205	HLW Vitrification Building Equipment Location Plan El. 14'-0"/Area 205
24590-HLW-P1-P23T-00209	HLW Vitrification Building Equipment Location Plan El. 14'-0"/Area 209
24590-HLW-P1-P23T-00210	HLW Vitrification Building Equipment Location Plan El. 14'-0"/Area 210
24590-HLW-P1-P23T-00214	HLW Vitrification Building Equipment Location Plan El. 14'-0"/Area 214
24590-HLW-P1-P23T-00215	HLW Vitrification Building Equipment Location Plan El. 14'-0"/Area 215
24590-HLW-P1-P23T-00304	HLW Vitrification Building Equipment Location Plan El. 37'-0"/Area 304
24590-HLW-P1-P23T-00305	HLW Vitrification Building Equipment Location Plan El. 37'-0"/Area 305
24590-HLW-P1-P23T-00309	HLW Vitrification Building Equipment Location Plan El. 37'-0"/Area 309
24590-HLW-P1-P23T-00310	HLW Vitrification Building Equipment Location Plan El. 37'-0"/Area 310
24590-HLW-P1-P23T-00314	HLW Vitrification Building Equipment Location Plan El. 37'-0"/Area 314
24590-HLW-P1-P23T-00315	HLW Vitrification Building Equipment Location Plan El. 37'-0"/Area 315
24590-HLW-P1-P23T-00404	HLW Vitrification Building Equipment Location Plan El. 58'-0"/Area 404
24590-HLW-P1-P23T-00405	HLW Vitrification Building Equipment Location Plan El. 58'-0"/Area 405
24590-HLW-P1-P23T-00409	HLW Vitrification Building Equipment Location Plan El. 58'-0"/Area 409
24590-HLW-P1-P23T-00410	HLW Vitrification Building Equipment Location Plan El. 58'-0"/Area 410

Document Number	Title
24590-HLW-P1-P23T-00414	HLW Vitrification Building Equipment Location Plan El. 58'-0"/Area 414
24590-HLW-P1-P23T-00415	HLW Vitrification Building Equipment Location Plan El. 58'-0"/Area 415
24590-HLW-E8-LVE-00001	Electrical Load List HLW

Appendix A Test Objectives, Conditions, and Acceptance Criteria

NOTE: Demonstrations and Tests identified in this appendix are preliminary, pending completion of design activities. They are established to document the flowdown of verification needs established in Section 3 but are not sufficiently detailed for development of specific system and equipment test plans. They may be used for general planning only. This note is to be removed when design is sufficiently progressed to provide the details needed to establish the basis for testing and acceptance criteria. **[HOLD]** (ATS, 24590-WTP-ATS-MGT-15-0097)

Requirement (para #)	Test (T) or Demo (D)	SU or COM	Plan (including SSCs)	Acceptance Criteria (TAC or GTC)**	Notes/Comments	Test Conditions
3.4.1.3	D	SU/COM	**Disassemble Waste – Size Reduce Components** – Demonstrate remote operation of the size reduction tooling operation to verify size reduction activities S.1, S.2, S.3, S.4, S.5 shown in Table 2-1.	**(GTC)** Successful remote size reduction, handling and disposal of secondary waste components	One test may be performed in either Melter Cave 1 or Melter cave 2 as Melter Caves are alike.	Pre-Hot Operations HSH operating
3.4.1.3	D	SU/COM	**Disassemble Waste – Size Reduce Components** – Demonstrate export route for removal of solid waste to verify size reduction activities S.1, S.2, S.3, S.4, S.5 shown in Table 2-1.	**(GTC)** 1) Demonstrate that the 25 ton crane (HSH-CRN-00001 / HSH-CRN-00014) can be used to lower a solid waste basket through the waste transfer port (HSH-CHT-00001 / HSH-CHT-00002) into a staged 55 gallon drum in the System RWH drum transfer bogie.	Basket may be empty or full.	RWH drum transfer bogie (RWH-TRLY-00007) loaded with 55-gallon drum located under transfer port. 55-gallon drum loaded with 1000 lb test weights.
3.4.1.5	D	SU/COM	**Deactivation, Decontamination, Decommissioning** – Demonstrate the required remotability functions.			Physical demonstration, expect to perform in conjunction with remotability verification deemed for supported systems.
3.4.4.1.1	D	SU/COM	**Remote Handling of Equipment** – Demonstrate remotability in accordance with 24590-WTP-PL-RACT-RT-0001, *WTP Remotability Verification Plan.*	**(GTC)** Successful remote removal and re-installation of the HSH equipment and components listed in the test plans.	Physical demonstration	
3.4.4.1.3	D	SU/COM	**Remote Operability and Maintenance** – Demonstrate remote installation and removal of jumpers	**(GTC)** 1) Demonstrate that the 25 ton crane and power manipulator crane (HSH-CRN-00001 / HSH-CRN-00014 or HSH-MANIP-00010 / HSH-MANIP-00023) can be used to install and remove melter cave (all Systems) jumpers.	This may be performed during construction installation with the oversight of operations.	
3.4.4.1.3	D	SU/COM	**Remote Operability and Maintenance** – Demonstrate the remote installation and removal of the melter feed preparation vessel	**(GTC)** 3) Demonstrate that the 25 ton crane and power manipulator crane (HSH-CRN-00001 / HSH-	One test may be performed in either Melter Cave 1 or Melter cave 2 as Melter Caves are alike.	

Requirement (para #)	Test (T) or Demo (D)	SU or COM	Plan (including SSCs)	Acceptance Criteria (TAC or GTC)**	Notes/Comments	Test Conditions
				CRN-00014 and HSH-MANIP-00010 / HSH-MANIP-00023) and the vessel transfer cart (HSH-TRLY-00003) can be used to remove and replace the melter feed preparation vessel. MC1 HFP-VSL-00001 HSH-TRLY-00003 MC2 HFP-VSL-00005 HSH-TRLY-00003	May be performed in conjunction with pprox.lity test	
3.4.4.1.3	D	SU/COM	**Remote Operability and Maintenance** – Demonstrate the remote installation and removal of the melter feed vessel.	**(GTC)** 3) Demonstrate that the 25 ton crane and power manipulator crane (HSH-CRN-00001 / HSH-CRN-00014 and HSH-MANIP-00010 / HSH-MANIP-00023) and the vessel transfer cart (HSH-TRLY-00003) can be used to remove and replace the melter feed vessel. MC1 HFP-VSL-00002 HSH-TRLY-00003 MC2 HFP-VSL-00006 HSH-TRLY-00003	One test may be performed in either Melter Cave 1 or Melter cave 2 as Melter Caves are alike. May be performed in conjunction with pprox.lity test	
3.4.4.3	D	SU/COM	**Melter and Melter Consumables Including Startup** – Demonstrate remotability in accordance with 24590-WTP-PL-RACT-RT-0001, *WTP Remotability Verification Plan.*	**(GTC)** Successful demonstration that all the consumables in the melter cave can be removed and re-installed.		

Requirement (para #)	Test (T) or Demo (D)	SU or COM	Plan (including SSCs)	Acceptance Criteria (TAC or GTC)**	Notes/Comments	Test Conditions
				(GTC) 1) Demonstrate that the anti-collision system prevents upper 25 ton crane (HSH-CRN-00001 / HSH-CRN-00014) from colliding with lower power manipulator crane (HSH-MANIP-00010 / HSH-MANIP-00023).	1a) Ensure 25 ton crane hoist is located at upper limit switch and has no suspended load. Locate 25 ton crane bridge (MC1 HSH-CRN-00001, MC2 HSH-CRN-00014) at pprox. grid line K (+/- 5ft). Locate manipulator crane bridge (MC1 HSH-MANIP-00010, MC2 HSH-MANIP-00023) at pprox. grid line H (+/- 5 ft) in the melter cave. Locate both trolleys approximately (MC1 HSH-CRN-00001, MC2 HSH-CRN-00014) and (MC1 HSH-MANIP-00010, MC2 HSH-MANIP-00023) at bridge centerline (i.e one trolley in line with the other). Attempt to move manipulator bridge (MC1 HSH-MANIP-00010, MC2 HSH-MANIP-00023) south to pass under the 25 ton crane bridge (MC1 HSH-CRN-00010, MC2 HSH-CRN-00014), verify interlock stops the manipulator bridge from proceeding under the 25 ton crane bridge and provides operator annunciation of event. After operator acknowledgement, verify manipulator bridge proceeds under 25 ton bridge at slow speed only until cranes are clear of each other. Swap 25 ton crane bridge and manipulator crane bridge locations and repeat test in opposite direction. 1b) Ensure 25 ton crane hoist is located at upper limit switch and has no suspended load. Locate 25 ton crane	
3.5.1.4.1	D	SU/COM	**Collision Avoidance** – Demonstrate that the crane collision avoidance system performs the intended function			

Requirement (para #)	Test (T) or Demo (D)	SU or COM	Plan (including SSCs)	Acceptance Criteria (TAC or GTC)**	Notes/Comments	Test Conditions
					bridge (MC1 HSH-CRN-00001, MC2 HSH-CRN-00014) at pprox. grid line K (+/- 5ft). Locate manipulator crane bridge (MC1 HSH-MANIP-00010, MC2 HSH-MANIP-00023) at pprox. grid line H (+/- 5 ft) in the melter cave. Locate both trolleys approximately (MC1 HSH-CRN-00001, MC2 HSH-CRN-00014) and (MC1 HSH-MANIP-00010, MC2 HSH-MANIP-00023) at bridge centerline (i.e one trolley in line with the other). Attempt to move 25 ton crane bridge (MC1 HSH-CRN-00001, MC2 HSH-CRN-00014) north to pass over the power manipulator bridge (MC1 HSH-MANIP-00010, MC2 HSH-MANIP-00023), verify interlock stops the 25 ton bridge from proceeding over the power manipulator bridge and provides operator annunciation of event. After operator acknowledgement, verify 25 ton bridge passes over manipulator bridge at slow speed only until cranes are clear of each other. Swap 25 ton crane bridge and manipulator crane bridge locations and repeat test in opposite direction.	
3.5.1.5	D	SU/COM	**Recovery of Crane** – Demonstrate remotability in accordance with 24590-WTP-PL-RACT-RT-0001, *WTP Remotability Verification Plan.*	**(GTC)** 3) Demonstrate that the crane bridge recovery jack-down wheels can be deployed and used to travel between the ultimate north and south limit switch positions. 1a) HSH-CRN-00001		

Requirement (para #)	Test (T) or Demo (D)	SU or COM	Plan (including SSCs)	Acceptance Criteria (TAC or GTC)**	Notes/Comments	Test Conditions
				ULTN HSH-ZS-1306 ULTS HSH-ZS-1307 (Note: will be replaced by HSH-Z-1393) 1b) HSH-CRN-00014 ULTN HSH-ZS-4806 ULTS HSH-ZS-4807 1c) HSH-MANIP-00010 ULTN HSH-ZS-1206 ULTS HSH-ZS-1207 1d) HSH-MANIP-00023 ULTN HSH-ZS-4706 ULTS HSH-ZS-4707 **(GTC)** 2) Demonstrate that the crane trolley recovery jack-down wheels can be deployed and used to travel between the ultimate east and west limit switch positions. 2a) HSH-CRN-00001 ULTW HSH-ZS-1315 ULTE HSH-ZS-1316 2b) HSH-CRN-00014 ULTW HSH-ZS-4820 ULTE HSH-ZS-4821 2c) HSH-MANIP-00010 ULTW HSH-ZS-1215 ULTE HSH-ZS-1216 2d) HSH-MANIP-00023 ULTW HSH-ZS-4723 ULTE HSH-ZS-4724		
3.5.4.1	D	SU/COM	**Crane Brakes** – Demonstrate that the brakes on all crane drive functions set when the power is off.	**(GTC)** Successful verification that the brakes on all crane drive functions set when the power is off.		
3.5.4.2	T	SU/COM	**Cane Lighting** – Measure illumination levels below main melter crane and power manipulator crane to verify that the combined crane/facility lighting complies with IESNA Standard RP-7.	**(GTC)** Successful verification that the lighting level complies with IESNA Standard RP-7.		

Requirement (para #)	Test (T) or Demo (D)	SU or COM	Plan (including SSCs)	Acceptance Criteria (TAC or GTC)**	Notes/Comments	Test Conditions
3.5.4.6	D	SU/COM	**Emergency Stop Reporting** – Demonstrate emergency stop reporting and reset functions.	**(GTC)** Successful reporting of the emergency stop position and resetting of the emergency stop.		
3.5.4.9	D	SU/COM	**Crane Operation** – Demonstrate the capability to operate cranes either from remote control station using CCTV cameras or through observation windows.	**(GTC)** The crane is successfully operated from a remote station using CCTV cameras or through observation windows.		
3.6.1.2	D	SU/COM	**Piping** – Demonstrate remote operations of the jumper connections on the pump support package	**(GTC)** Demonstrate that the power manipulator crane (HSH-MANIP-00010 / HSH MANIP-00023) can make the jumper connections on the pump support package.		
3.6.1.2.1	D	SU/COM	**Pipelines Flushing** – Demonstrate flushing/draining capabilities of the decontamination tank and lines	**(GTC)** Demonstrates the capability of flushing the decontamination system using water from the PWD system with effluent being transported to the RLD system		
3.6.1.3	D	SU/COM	**Decontamination** – Demonstrate remote operations of the decontamination system and discharge of fluids	**(GTC)** 3) Demonstrate that the decontamination area crane (HSH-CRN-00010 / HSH-CRN-00012) can be used to remotely operate the crane decontamination system (MC1 HSH-MHAN-00011 / MC2 HSH-MHAN-00055) 2) Demonstrate that the power manipulator crane (HSH-MANIP-00010 / HSH-MANIP-00023) can be used to operate the remote decontamination spray lances.	One test may be performed in either Melter Cave 1 or Melter cave 2 as the Melter Caves are alike.	
3.6.3.4	D	SU/COM	**Radioactive Liquid Waste Disposal System** – Demonstrate transfer of HSH decontamination tank to the RLD system			

Requirement (para #)	Test (T) or Demo (D)	SU or COM	Plan (including SSCs)	Acceptance Criteria (TAC or GTC)**	Notes/Comments	Test Conditions
3.6.3.5	D	SU/COM	**Instrument Service Air System (ISA)** – Demonstrate sparging of the HSH decontamination tank.			
3.6.4.1	D	SU/COM	**Decontamination Tanks Inspection** – Demonstrate the ability to inspect the decontamination tank using shield windows and CCTV.	**(TAC) (DWP)** 3) Verify the ability to inspect decontamination tank (HSH-TK-00001 / HSH-TK-00002) using windows and / or cameras. 2) Verify the ability to inspect decontamination tank (HSH-TK-00001 / HSH-TK-00002) construction materials and the area immediately surrounding the externally-accessible portion of the tank system, including the secondary containment to detect erosion or signs of releases of waste. 3) Verify that the decontamination tank (HSH-TK-00001 / HSH-TK-00002) systems signs or labels are visible using windows and/or cameras.	Verify inspection	System RLD operational – System RLD receives the effluent from the System HSH decontamination tank. System PWD operational – System PWD provides decontamination media to the System HSH decontamination tank. Lighting operational in decontamination pit.
3.7.1.1	D	SU/COM	**Glovebox Internal Pressure** – Perform a test to ensure that the glovebox maintains a negative pressure relative to the surrounding area.	**(GTC)** The glovebox is able to maintain a negative relative to the area it resides in.		
3.7.1.5	D	SU/COM	**Measuring Contamination Levels** – Demonstrate the ability to import and use portable instruments within the glovebox.	**(GTC)**		
3.8.1.1	D	SU/COM	**Lifting Beams, Yokes, etc.** – Demonstrate remotability in accordance with 24590-WTP-PL-RACT-RT-0001, *WTP Remotability Verification Plan.*	**(GTC)** Demonstrate that the designed lifting fixtures can perform their intended functions.		
3.8.1.2	D	SU/COM	**Tools for Remote Equipment Disassembly** – Demonstrate that the remote operated tools (e.g., nutrunners, impact wrenches, yokes, extension hooks, fixtures, etc.) are available within the melter cave and are functionally able to perform the required functions in accordance with 24590-WTP-PL-RACT-RT-0001, *WTP Remotability Verification Plan.*	**(GTC)** Demonstrate that the remote operated tools can perform remotely assemble and disassemble the components in the melter cave.		

Requirement (para #)	Test (T) or Demo (D)	SU or COM	Plan (including SSCs)	Acceptance Criteria (TAC or GTC)**	Notes/Comments	Test Conditions
3.9.1.1	D	SU/COM	**Master Slave Manipulators** – Demonstrate that the manipulators can perform the remote installation, maintenance, removal, and disposal of the in-cave equipment. Assistance may be provided by in-cave cranes or other manipulators.	**(GTC)** Successful demonstration that the manipulators can perform the remote installation, maintenance, removal, and disposal of the in-cave components. Assistance may be provided by in-cave cranes or other manipulators.		
3.9.1.2	D	SU/COM	**Hydraulic Powered Manipulators** – Demonstrate that the manipulators can perform the remote installation, maintenance, removal, and disposal of the in-cave equipment. Assistance may be provided by in-cave cranes or other manipulators.	**(GTC)** Successful demonstration that the manipulators can perform the remote installation, maintenance, removal, and disposal of the in-cave components. Assistance may be provided by in-cave cranes or other manipulators.		
3.9.1.3	D	SU/COM	**Manipulator Recovery** - Demonstrate capability of removal and transfer of MSMs to designated maintenance area	**(GTC)** 1) Demonstrate that the power manipulator crane (HSH-MANIP-00010 / HSH-MANIP-00023) can be used to remove an in-cave slave arm and transport the arm into the crane maintenance area. **(GTC)** 2) Demonstrate that the power manipulator crane (HSH-MANIP-00010 / HSH-MANIP-00023) can be used to move an MSM from the crane maintenance area and install at in-cave location. Applicable equipment for GTC 1 and 2: HSH-MANIP-00005 HSH-MANIP-00006 HSH-MANIP-00007 HSH-MANIP-00008 HSH-MANIP-00009 HSH-MANIP-00011 HSH-MANIP-00012* HSH-MANIP-00013* HSH-MANIP-00014* HSH-MANIP-00015*	Testing may be performed on one MSM only using the most conservative location. * MSM slave arms located in the equipment decontamination pit require use of the MSM powered offset lifting beam to remove and re-engage. (Unresolved requirements issue)	

Requirement (para #)	Test (T) or Demo (D)	SU or COM	Plan (including SSCs)	Acceptance Criteria (TAC or GTC)**	Notes/Comments	Test Conditions
				HSH-MANIP-00018 HSH-MANIP-00019 HSH-MANIP-00020 HSH-MANIP-00021 HSH-MANIP-00022 HSH-MANIP-00024 HSH-MANIP-00025* HSH-MANIP-00026* HSH-MANIP-00027* HSH-MANIP-00028*		
3.9.1.3	D	SU/COM	**Manipulator Recovery** - Demonstrate capability of removal and transfer of the hydraulic powered manipulator slave arms to designated maintenance area	**(GTC)** 1) Demonstrate that the 25 ton crane and power manipulator crane (HSH-CRN-00001 / HSH-CRN-00014 and HSH-MANIP-00010 / HSH-MANIP-00023) can be used to remove, export from melter cave, import and replace the hydraulic power manipulator slave arm. MC1 HSH-MANIP-00002 (Breakdown Table HPM) HSH-MANIP-00004 (Sorting Table HPM) MC2 HSH- MANIP-00016 (Breakdown Table HPM) HSH- MANIP-00017 (Sorting Table HPM)	One test may be performed in either Melter Cave 1 or Melter cave 2 as Melter Caves are alike.	This demonstration may require the power manipulator crane to be closer to the shield walls than during normal operations. Thus requiring this to be demonstrated in supervisory (bypass) mode
3.10.4.2	D	SU/COM	**Shield Door Recovery** - Demonstrate recovery capability of the horizontal shield doors. Recovery Device: HSH-RCVY-00006 Shield door CTNs: HSH-DOOR-00002, HSH-DOOR-00004, HSH-DOOR-00005, HSH-DOOR-00007	**(GTC)** Successful closing of shield doors using recovery devices.		The test starts with the door in the fully open position. Power to the door must be lock and tagged out prior to performing the recovery operation.
3.10.4.2	D	SU/COM	**Shield Door Recovery** - Demonstrate recovery capability of the vertical shield doors. Recovery Device: HSH-RCVY-00003	**(GTC)** Successful closing of shield doors using recovery devices.		Shield door fully open.

Requirement (para #)	Test (T) or Demo (D)	SU or COM	Plan (including SSCs)	Acceptance Criteria (TAC or GTC)**	Notes/Comments	Test Conditions
			HSH-RCVY-00015 Shield door CTNs: HSH-DOOR-00001, HSH-DOOR-00003, HSH-DOOR-00006, HSH-DOOR-00008			
3.11.1.2	D	SU/COM	**Designed for Remote Operations** - Demonstrate remotability in accordance 24590-WTP-PL-RACT-RT-0001, *WTP Remotability Verification Plan.*	**(GTC)** Successful demonstration that the central vacuum system can be operated remotely and successfully pickup and contain the debris.		
3.11.2.1	D	SU/COM	**Vacuum System Recovery** - Demonstrate remotability in accordance with 24590-WTP-PL-RACT-RT-0001, *WTP Remotability Verification Plan.*	**(GTC)** Successful remote removal and re-installation of central vacuum system components.		
3.12.1.1	D	SU/COM	**Vessel Transfer Cart** - Demonstrate remote installation and removal of the vessel transfer cart equipment	**(GTC)** 1) Demonstrate that the power manipulator cranes (HSH-MANIP-00010 / HSH-MANIP-00023) can be used to remove and replace the vessel transfer cart import winch HSH-MHAN-00044.	One test may be performed in either Melter Cave 1 or Melter cave 2 as Melter Caves are alike.	
3.12.1.3	D	SU/COM	**Shuttle Cart** - Demonstrate remotability in accordance with 24590-WTP-PL-RACT-RT-0001, *WTP Remotability Verification Plan.*	**(GTC)** Successful demonstration of remotability of the shuttle cart per the test plans.		
3.12.1.4	D	SU/COM	**Remote Operations** - Demonstrate remotability in accordance with 24590-WTP-PL-RACT-RT-0001, *WTP Remotability Verification Plan.*	**(GTC)** Successful demonstration of remotability of the vessel transfer cart as detailed in the test plans.		
3.12.1.5	D	SU/COM	**Remotely Removable and Replaceable** - Demonstrate remotability in accordance with 24590-WTP-PL-RACT-RT-0001, *WTP Remotability Verification Plan.*	**(GTC)** Successful retrieval of the vessel transfer cart back to the maintenance area through the appropriate decontamination processes.		
3.13.1.2.2	D	SU/COM	**Cave Face Control** - Demonstrate the ability to view and control the operations through shield windows and cameras at the local operator interfaces.	**(GTC)** 1) Verify the ability to perform 25 ton crane operations (HSH-CRN-00001 / HSH-CRN-00014) and power manipulator crane operations (HSH-MANIP-00010 / HSH-MANIP-00023) via shield windows or cameras.		Lighting operational in Melter Cave.

Requirement (para #)	Test (T) or Demo (D)	SU or COM	Plan (including SSCs)	Acceptance Criteria (TAC or GTC)**	Notes/Comments	Test Conditions
				2) Verify operational viewing is not obstructed by window protection barriers.		
3.13.1.3.2	D	SU/COM	**Decontamination Tank Temperature** - Demonstrate that the HPS system can heat the decontamination tank and the temperature controller restrict the temperature to refrain from boiling the decontamination media.			
3.13.2.2	D	SU/COM	**Interlock for Gamma Detector/Monitor relative to posting ports** – Demonstrate the operability of the gamma monitor instrumentation	**(TAC)** 1) Demonstrate the operability and source checks of the gamma monitor instrumentation located in System HSH. **(GTC)** 2) Demonstrate that the gamma monitors fail to the alarm state.	1) Expose gamma monitor to a known check source and verify that the instrument indicates within 20 % of the check source reading and verify that the monitor detects greater than or equal to the specified efficiency. Inject a signal into the monitor and adjust until the alarm sounds to verify set point value. Set point: TBD* 2) Turn off monitor and verify alarm / interlock function. Lift a lead on the signal loop to verify it alarms with an open circuit.	
Error! Reference source not found.	D	SU/COM	**Interlock between Posting Ports** - Demonstrate that the interlocks between the posting port shield doors function according to design specifications	**(TAC)** 1) Demonstrate the safety shield door interlock prevents posting port (Melter Cave 1 (MC1) HSH-TWDVC-00001 / Melter Cave 2 (MC2) HSH-TWDVC-00002) in-cave and out-cave shield doors being in the open position at the same time. **(TAC)** 2) Demonstrate the safety gamma monitor interlock prevents posting port (MC1 HSH-TWDVC-00001 / MC2 HSH-TWDVC-00002) out cave shield	1) Close in-cave and out-cave shield doors. Open the out cave shield doors. Attempt to open the in-cave shield door. Confirm the safety interlock does not permit the in-cave shield door to open. 2) Close in-cave and out-cave shield doors. Open the in-cave shield door. Attempt to open the out - cave shield doors.	The actual operational set point for the gamma monitor is not required to complete this test. The purpose of the test is to confirm the functionality of the interlock. The gamma monitor set point will be determined prior to the start of hot operations. The source may be simulated by injecting a signal to the monitor.

Requirement (para #)	Test (T) or Demo (D)	SU or COM	Plan (including SSCs)	Acceptance Criteria (TAC or GTC)**	Notes/Comments	Test Conditions
				doors from opening if the gamma monitor detects a high radiation source within the posting port when the in-cave shield door is closed.	Confirm the safety interlock does not permit the out-cave shield doors to open. 3) Close the in-cave and out-cave shield doors. Simulate a high radiation source at gamma monitor. Attempt to open the out-cave shield doors. Confirm the safety interlock does not permit the out-cave shield doors to open.	
3.13.3.3	D	SU/COM	**Mechanical Handling Control System** – Demonstrate remote control operations for all the listed HSH equipment and components.		• Main melter cranes (HSH-CRN-00001/00014) • Power manipulator cranes (HSH-MANIP-00010/00023) • Shield Lid decontamination pit (HSH-MHAN-00032/00060) • Crane decontamination area shield doors (HSH-DOOR-00001/00002/00005/00006) • Crane maintenance area shield doors (HSH-DOOR-00003/00004/00007/00008) • Melter Import winch limit switch assembly (HSH-MHAN-00049) • Melter import winch (HSH-RCVY-00005) • Cable reeling system main crane (HSH-RCVY-00014/00019) • Cable reeling system power manipulator crane (HSH-RCVY-00008/00018)	

Requirement (para #)	Test (T) or Demo (D)	SU or COM	Plan (including SSCs)	Acceptance Criteria (TAC or GTC)**	Notes/Comments	Test Conditions
3.14.1.1	D	SU/COM	**Recovery of HLW Canister From HPH System** – Demonstrate recovery of canister form HPH system pour tunnel bogie	(GTC) 1) Demonstrate the ability to retrieve an HLW canister from the pour tunnel bogie using canister grapple (HSH-TOOL-00004)		Pour tunnel bogie loaded with HLW canister located at the melter pour spout location.
3.14.1.2	D	SU/COM	**As-Builts for In-cave/Canyon Dimensional Tolerances** - Demonstrate remotability of installed equipment in accordance with 24590-WTP-PL-RACT-RT-0001, *WTP Remotability Verification Plan.*			

Appendix B Descriptions of System Functional Flow and Interactions

Function: A.1	Disconnect and Remove Melter Components
Detailed description: The replacement of the HLW melter begins with the disconnection, removal, and storage of the cable support, disconnect cables from melter bus plug and disconnect connected components using the remote operated main melter crane, power manipulator crane, and manipulator operated tools. The mechanical and electrical jumpers are removed and stored for later reinstallation. The melter seismic restraints are disengaged and the melter made ready for transfer.	
Initiation: This is a remotely operated manual function that is initiated when an existing melter needs to be replaced.	
Termination: This function terminates with the removal and storage of the melter connected components, the seismic restraints disengaged, the necessary winches secured and attached and the melter made ready for transfer.	
Parallel or sequential functions: System HMH positions melter overpack at C3/C5 shield door.	
Applicable Modes: Normal operations	

Function: A.2	Export Melter
Detailed description: The spent HLW melter is removed from its home position to the melter cave C3/C5 shield door using a combination of the melter winch and an overpack supplied winch. Prior to the transfer of the spent melter, the melter cave false flooring is to be removed and stored for later replacement. The spent melter is loaded into an overpack for export.	
Initiation: This function initiates when HLW melter has all the necessary connections removed and there is an overpack ready to receive the spent melter.	
Termination: This function terminates with the packaging and export of the spent HLW melter.	
Parallel or sequential functions: N/A	
Applicable Modes: Normal operations	

Function: A.3	Import Melter
Detailed description: The replacement HLW melter is transferred from the overpack at the HMH C3/C5 interlock to the melter home position on the melter cave rails using a HSH winch.	
Initiation: This is a remotely operated manual function that initiates the receipt of the replacement HLW melter.	
Termination: This function terminates with the completion of the transfer of the HLW melter to its home position.	
Parallel or sequential functions: N/A	
Applicable Modes: Normal operations	

Function: A.4	Install and Connect Melter Components
Detailed description: After the HLW melter has been transferred to its home position the necessary components and connections need to be performed using remote operated cranes, manipulators, and manipulator operated tools. The melter seismic restraints are engaged and any new required components or consumables are transferred from the crane maintenance area through the shield doors to the crane decontamination area using the battery powered locally/remotely operated shuttle cart, where they are picked up by the main melter crane or power manipulator crane and transported through the shield doors to the melter cave. The cranes are operated remotely from the local operator interface with each movement being operator initiated.	
Initiation: This function is initiated remotely by the operator after the HLW melter has arrived at its home position.	

Termination: This function terminates when the necessary connections have been made and the HLW melter is deemed ready for restart (Q.1).
Parallel or sequential functions: N/A
Applicable Modes: Normal operations

Function: B.1	Disconnect and Remove Vessel Components
Detailed description: The removal and replacement of the melter feed preparation vessel, feed vessel, SBS, or HEME is performed remotely using cranes, manipulators, and manipulator operated tools. The vessels need to be drained and the vessel components and connections removed.	
Initiation: This function is initiated using remote operated cranes, manipulators, and manipulator operated tools.	
Termination: This function terminates when the vessel components and connections have been removed.	
Parallel or sequential functions: N/A	
Applicable Modes: Normal operations	

Function: B.2	Export Vessel
Detailed description: The vessel may be exported after the vessel components have been removed and stored, and any restraints and foundation anchors removed. The cranes remove and store the melter cave removable false flooring, then hoist the vessel and load it on a waiting vessel transfer cart. The vessel transfer cart is mounted on the melter cave rails and is transferred to the overpack using the overpack equipped winch to be made ready for export.	
Initiation: This function is initiated remotely by an operator to remove the vessel from its home position and transferred to a waiting overpack.	
Termination: This function terminates when the vessel has been transferred to the melter overpack.	
Parallel or sequential functions: System HMH positions melter overpack at C3/C5 shield door.	
Applicable Modes: Normal operations	

Function: B.3	Import Vessel
Detailed description: The replacement vessel is transferred from the overpack located at the melter cave C3/C5 airlock on a vessel transfer cart to the vessels home position on the melter cave rails using HSH melter winch(s). The main melter cave crane with assistance from the power manipulator crane and lifting fixtures hoist the vessel to its home position.	
Initiation: This is a remotely operated manual function that initiates with the receipt of the replacement vessel.	
Termination: This function terminates once the vessel has been transferred to and placed at its home position.	
Parallel or sequential functions: N/A	
Applicable Modes: Normal operations	

Function: B.4	Install and Connect Vessel Components
Detailed description: The HSH mechanical handling equipment remotely performs the installation and connection of the vessel mounting fixtures, vessel restraints, and vessel components using the cranes, power manipulator crane, and manipulator operated tools.	
Initiation: This function initiates when the vessel has been placed in its home position.	
Termination: This function terminates when the vessel has been installed, connections reestablished and the vessel is put into operations.	
Parallel or sequential functions: N/A	
Applicable Modes: Normal operations	

Function: C.1	Import Components into the CMA
Detailed description: The receipt of replacement components and consumables into the CMA is determined by the size of the items. Items are imported into the CMA via the CMA hatch and the CMA crane interfacing with the HMH system with the exception of the melter, vessels, and other very large items. The primary method will be for the HLW crane operator to remove the CMA floor hatch using a crane and either load a consumable template or hoist the replacement component on to a shuttle cart in the CMA, then replacing the CMA hatch. Components transportable by personnel may also be received in the CMA through one of the SPADs.	
Initiation: This function initiates when components are required to be received into the CMA area.	
Termination: This function terminates after the component has been received and the CMA floor hatch covered.	
Parallel or sequential functions: N/A	
Applicable Modes: Normal operations	

Function: C.2	Transfer Components to and from Melter Cave
Detailed description: Components and consumables received in the CMA are transferred through the crane maintenance area shield doors to the CDA using the battery powered locally/remotely operated shuttle cart, where they are picked up by the main crane or power manipulator crane and transferred through the crane decontamination shield doors to the melter cave. The cranes are operated remotely from the local operator interface with each movement being operated initiated.	
Initiation: This function initiates when the component is placed on the shuttle cart for transfer to the CDA or melter cave.	
Termination: This function terminates after the component has reached its final destination and the shield doors have been closed.	
Parallel or sequential functions: N/A	
Applicable Modes: Normal operations	

Function: D.1	Import Small Tools or Components Using the Posting Port
Detailed description: A posting port glovebox located in each of the two HLW melter caves may receive small components or tools that will fit in its confined space rather than use the crane in the crane maintenance area for distribution within the melter cave.	
Initiation: This function initiates when an operator has placed an item in the posting port.	
Termination: This function terminates when the item has been transferred to the melter cave.	
Parallel or sequential functions: This may be performed while the HLW melter is in operation.	
Applicable Modes: Maintenance and equipment replacement operations	

Function: E.1	Remove and Replace Shield Windows
Detailed description: The shield windows provide direct operator viewing into the C5/R5 areas from the C2/R2 operating corridors. The shield windows are removable and replaceable from the C2/R2 (cold) side after the remotely operated HSH mechanical handling equipment has installed the shield plate over the in-cave window aperture. After the shield window has been replaced and secured, the shield plate is removed.	
Initiation: This function initiates when the installed shield windows in the melter cave area or the decontamination pit area are to be replaced.	
Termination: This function terminates when the shield window as been replaced.	
Parallel or sequential functions: The opening needs to be adequately shielded prior to removal of existing shield window.	
Applicable Modes: Maintenance operations	

Function: F.1	Maintain/Replace the Size Reduction Equipment
Detailed description: Equipment located in the size reducing area will require periodic maintenance, repair, or replacement. The shear will require replacement of the shear blade, anvil, piston and clamp. The saw will require replacement of the saw blade, drive belt, and clamp. Provisions are also made for the removal and replacement of the plasma torch and the other size reducing equipment.	
Initiation: This function initiates when a size reducing piece of equipment needs to be maintained, repaired or replaced.	
Termination: This function terminates upon completion of the maintenance activity.	
Parallel or sequential functions: N/A	
Applicable Modes: Maintenance operations	

Function: G.1	Remove/Replace Light Bulbs and CCTV Cameras
Detailed description: The melter cave and equipment decontamination area have wall mounted lights and CCTV cameras that require maintenance. The wall mounted lights that have light bulbs that are remotely removed and replaced using the power manipulator crane, manipulators and manipulator operated tools. Also, in-cave CCTV cameras are removed and replaced using the manipulators and manipulator operated tools. The spent items are transferred to a solid waste basket or B-25 waste box.	
Initiation: This function initiates with the need to replace an in-cave wall mounted light, light bulb or CCTV camera.	
Termination: This function terminates upon replacement of the in-cave wall mounted light, light bulb or CCTV camera.	
Parallel or sequential functions: N/A	
Applicable Modes: Maintenance operations	

Function: H.1	Recover/Retrieve HSH Mechanical Handling Equipment
Detailed description: The HSH mechanical handling equipment has provisions for remote recovery in the advent of an in-cave malfunction. The main melter crane and power manipulator crane are recoverable without a load to preclude the potential of returning a contaminated component back to the maintenance areas. The cranes will safely detach their load then later recover said load to resume operations. These cranes have powered auxiliary features that may be engaged to recover the malfunctioning crane. There are also provisions to mechanically recover the crane in the event that the powered recovery function is inoperable. The recovered cranes are transferred to the CDA for decontamination then to CMA for repair. The recovery of the breakdown area hoist is performed by lifting the entire bridge and trolley off the profile rails using an adjustable span lifting beam. The bridge and trolley are then transferred to the CDA, decontaminated, then transferred to the CMA. The through wall hydraulic power manipulators have an in-cave slave arm lift off feature. A special purpose lifting beam is attached to the slave arm with the overhead power manipulator and transferred through decontamination to the CMA. The master slave manipulator slave arm are removed in-cave then transferred to the salve arm stand within the CDA and decontaminated for transfer to the CMA.	
Initiation: This function initiates in the advent of an in-cave malfunction and there is a need to recover the in-cave cranes or manipulators.	
Termination: This function terminates upon successful recovery of the HSH equipment.	

Parallel or sequential functions: N/A
Applicable Modes: Off-normal operation, or in-cave malfunction

Function: I.1	Remove and Replace Melter Consumables
Detailed description: The HSH mechanical handling equipment remotely performs the lifecycle maintenance of the HLW melters including the removal and replacement of the melter consumables (feed nozzle, frit addition nozzle, startup heater, bubblers, air lift lances, thermowells, thermocouples, level detector, film cooler and cleaner, pour spout, discharge chamber lid and heaters, melter plenum and pour stream cameras). The HSH cranes and manipulators remove the spent consumable and transfer it to the breakdown area for size reduction and transfer to a solid waste basket or placement into a B-25 waste box in the CDA or CMA.	
Initiation: This function initiates with the need to replace any of the HLW melter consumables.	
Termination: This function terminates upon replacement of the consumable.	
Parallel or sequential functions: N/A	
Applicable Modes: Maintenance operations	

Function: I.2	Remove and Connect the Melter Bus Plug
Detailed description: Maintenance of the melter includes the removal and replacement of the melter bus plug. The HSH cranes, manipulators, and manipulator operated tools perform the remote removal and replacement of the melter bus plug in the event that the bus plug does not meet its intended service life..	
Initiation: This function initiates when the HLW melter is being replaced or when operations determines that the melter bus plug needs replacement.	
Termination: This function terminates upon installation and connection of the melter to the main power system.	
Parallel or sequential functions: The melter is removed prior to the replacement of the melter bus plug.	
Applicable Modes: Off-normal operation	

Function: I.3	Maintain Pour Spout
Detailed description: The HSH mechanical handling equipment remotely performs the maintenance of the HLW melter pour spout by removing and replacing the pour spout, clean out the drip tray, replace the drip tray limit switch, replace the pneumatic cylinder, or replace the pour stream camera.	
Initiation: This function initiates when operations determines that the melter pour spout requires maintenance.	
Termination: This function terminates upon return of the melter to production mode.	
Parallel or sequential functions: N/A	
Applicable Modes: Maintenance operations	

Function: I.4	Provide for Off-Normal Melter Maintenance
Detailed description: Provisions are made for the off-normal event where the HSH mechanical handling equipment will be tasked to remove the melter lid and remove solidified glass and refractory from the bottom of the lid and from within the melter. The removed glass and refractory will be transferred to a solid waste basket and the melter lid exported.	
Initiation: This function initiates when an off-normal event requires the removal of the HLW melter lid.	
Termination: This function terminates upon the completion of the removal of the melter lid and removal of the solidified glass and refractory from the bottom of the lid.	
Parallel or sequential functions: N/A	
Applicable Modes: Off-normal operations	

Function: J.1	Maintain High Efficiency Mist Eliminator (HEME)
Detailed description: The maintenance of the HEME includes removing and replacing the filters, O-ring gasket and liquid level and temperature detection equipment. This function is performed remotely using the HSH cranes, manipulators, and manipulator operated tools. The spent filters are individually loaded into a solid waste basket, gaskets and other items are also loaded into solid waste baskets.	
Initiation: This function initiates when maintenance is required on the HEME.	
Termination: This function terminates when the HEME is put back into service.	
Parallel or sequential functions: Provisions are provided to switch to the other HEME when one of them is off-line.	
Applicable Modes: Maintenance operations	

Function: K.1	Maintain Submerged Bed Scrubber (SBS)
Detailed description: The HSH mechanical handling equipment remotely performs the maintenance of the SBS, removing and replacing the SBS cooling coil if necessary and replacing the O-ring gasket and level and temperature detection equipment. The spent SBS cooling coil is transferred to the HSH vessel transfer cart for transfer to an overpack in the HMH area.	
Initiation: This function initiates when maintenance is required on the SBS.	
Termination: This function terminates the SBS is put back into service.	
Parallel or sequential functions: The melter is off line.	
Applicable Modes: Maintenance and Off-Normal operations	

Function: K.2	Export old SBS Bed cooling coil unit
Detailed description:	
Initiation: This function initiates when maintenance is required on the SBS.	
Termination: This function terminates the SBS is put back into service.	
Parallel or sequential functions: The melter is off line.	
Applicable Modes: Maintenance and Off-Normal operations	

Function: L.1	Maintain Process Equipment
Detailed description: Maintain and/or replace the process equipment attached to the melter feed and melter feed preparation vessels using the associated manipulator operated tools to remotely disconnect the electrical, mechanical and instrument air jumpers. Remove mechanical agitators, sample/transfer pumps, demisters, air amplifiers, steam ejectors, and flapper valves. For general maintenance or repair the item is transferred to the CDA, decontaminated and transferred to the CMA for hands-on maintenance. Items that need to be replaced are removed to the size reduction area, size reduced if appropriate and transferred to solid waste baskets for transfer to the RWH system. Those items that are not able to be size reduced, e.g., pumps, motors, etc., are transferred to the CDA, decontaminated and transferred to the CMA for packaging in a B-25 waste box.	
Initiation: This function initiates when operations decides that a component associated with the melter feed preparation or melter feed vessels need maintenance or replacement.	
Termination: This function terminates when the item is put back into service.	
Parallel or sequential functions: N/A	
Applicable Modes: Maintenance and off-Normal operations	

Function: M.1	Maintain the ADS Pump
Detailed description: The in-situ maintenance of the ADS pump consists of re-greasing the bearings with a remote operated grease gun handled with the power manipulator crane, all other maintenance activities are performed in the CMA.	
Initiation: This function initiates when the maintenance schedule requires operations to perform the maintenance of the ADS pump.	
Termination: This function terminates when operations completes the maintenance cycle.	
Parallel or sequential functions: N/A	
Applicable Modes: Normal operations	

Function: M.2	Repair the ADS Pump
Detailed description: The repair or other than general maintenance of the ADS pump may require the removal and replacement of the air actuator, feed jumper, or vent valve using the remote operated cranes, manipulator, and manipulator operated tools. Spent components are transferred to the CDA, decontaminated, then transferred to the CMA for hands-on repair, maintenance, or export.	
Initiation: This function initiates when operations has determined that the ADS needs servicing beyond the normal maintenance of re-greasing the bearings.	
Termination: This function terminates upon completion of the repair and the ADS pump put back into service.	
Parallel or sequential functions: Switch feed functions to other ADS pump.	
Applicable Modes: Normal operations	

Function: M.3	Replace ADS Pump
Detailed description: Remove and replace the ADS pump and connections using the remote operated cranes, manipulator, and manipulator operated tools. The new ADS pump is received in the CMA and transferred to the melter cave area for installation. The spent ADS pump is transferred to the CDA, decontaminated and transferred to the CMA for packaging in a B-25 waste box and export.	
Initiation: This function initiates when operations has determined that the ADS pump needs to be replaced.	
Termination: This function terminates upon installation of the ADS pump, the re-connections performed, and the ADS pump put back into service.	
Parallel or sequential functions: Switch feed functions to other ADS pump.	
Applicable Modes: Off-normal operations	

Function: N.1	Maintain the Agitator
Detailed description: The melter feed preparation vessel and the melter feed vessel contain agitators that require periodic maintenance of the agitator or motor gearbox. Using cranes, manipulators, and manipulator operated tools remotely remove the motor gearbox and if maintenance required remove the agitator. Transfer the item requiring maintenance to the CDA, decontaminate then transfer to the CMA for maintenance, repair, or export.	
Initiation: This function initiates when operations has determined that the motor gearbox or agitator in one of the vessels needs to be serviced.	
Termination: This function terminates upon installation and return to service of the vessel containing the agitator.	
Parallel or sequential functions: N/A	
Applicable Modes: Maintenance operations	

Function: N.2	Replace Agitator
Detailed description: The melter feed preparation vessel and the melter feed vessel contain motor gearbox driven agitators that require removal and replacement. Using cranes, manipulators, and manipulator operated tools remotely remove the motor gearbox and remove the agitator. If replacing the motor gearbox, transfer the agitator motor and gearbox to the CDA, decontaminate then transfer to the CMA. If replacing the agitator, separate from motor gearbox, transfer to the CDA, decontaminate, then transfer to the CMA The agitator and agitator motor gearbox are transferred to the CMA for packaging in a B-25 waste box.	
Initiation: This function initiates when operations has determined that the agitator in one of the feed vessels needs to be replaced.	
Termination: This function terminates upon the new agitator has been replaced and the feed vessel is put back into service.	
Parallel or sequential functions: N/A	
Applicable Modes: Maintenance operation	

Function: O.1	Maintain/Replace Master Slave Manipulators
Detailed description: The MSM slave arm is remotely removed and placed on a purposely built decontamination stand to allow placing the slave arm into the decontamination tank for remote spray decontamination. A finger change fixture is used to remotely remove the fingers before exporting the slave arm from the melter cave. Decontaminate the slave arm to acceptable radiologic limits and transfer to the CMA or the C3 workshop for hands on maintenance, repair, or replacement.	
Initiation: This function initiates when operations determines that a MSM needs to be maintained, repaired , or replaced.	
Termination: This function terminates upon the MSM being put back into service.	
Parallel or sequential functions: N/A	
Applicable Modes: Maintenance operations	

Function: P.1	Maintain/Replace Hydraulic Power Manipulator
Detailed description: The breakdown and sorting table hydraulic power manipulator is remotely removed with a dedicated lift beam using the overhead power manipulator crane. Once removed, the slave arm is placed into an arm cradle for spray lance decontamination. The slave arm is decontaminated to acceptable radiologic limits and transferred to the CMA for hands-on maintenance or repair.	
Initiation: This function initiates when operations determines that a hydraulic power manipulator needs to be maintained, repaired , or replaced.	
Termination: This function terminates upon installation and return to service of the hydraulic power manipulator.	
Parallel or sequential functions: N/A	
Applicable Modes: Maintenance operations	

Function: Q.1	Remotely Support the Startup of the HLW Melter
Detailed description: Components necessary for melter startup e.g., heaters, frit, etc., are transported and installed and/or removed remotely using HSH equipment. For melter startup frit needs to be added to the new melter and the startup heaters initiated. Once the glass pool has formed the startup heaters are removed from the bubbler ports on the top of the melter lid and bubblers installed and connected.	

Initiation: This function initiates when a new melter has been installed and operations needs to commence startup.
Termination: This function terminates upon completion of startup and the melter put into production service.
Parallel or sequential functions: N/A
Applicable Modes: Melter startup operations

Function: R.1	Decontaminate Components Using Decontamination Tank
Detailed description: Perform wet decontamination in the decontamination tank of equipment prior to hands on maintenance or equipment export. The Demineralized Water System (DIW) and Plant Wash and Disposal System (PWD) provide decontamination media for the decontamination of components within the HSH system. The High Pressure Steam system (HPS) provides steam for heating the decontamination tank if required, and for cleaning out the decontamination tank drain line if needed. The Instrument Service Air system (ISA) provides on-demand air for use in the decontamination tank for sparging. Chemicals such as dilute nitric acid may also be entered into the tank to assist in decontamination. The decontamination tank can operate as a total immersion decontamination bath or has spray rings for pressure wash decontamination.	
Initiation: This function initiates when components have been received that require decontamination.	
Termination: This function terminates upon completion of decontamination and the component has been inspected and determined to be below the radiologic safe limits.	
Parallel or sequential functions: The sequential function entails decontamination then inspect to verify that component is below radiologic safe limits, if not repeat decontamination process until either the component is decontaminated or if the component cannot be decontaminated then transferred back to the melter cave for disposal to the RWH system.	
Applicable Modes: Normal operations	

Function: R.2	Decontaminate Components Using Spray Lances
Detailed description: Decontaminate equipment and components with manual or remote operated spray lances using high pressure water, steam, or CO_2 pellets. Prior to returning the main melter crane or power manipulator crane to the maintenance area, they must be decontaminated using the crane decontamination spray lances. A turntable is available to position and secure items on so that the item can be rotated using a spray lance from a stationary position.	
Initiation: This function initiates when components have been received that require decontamination.	
Termination: This function terminates upon completion of decontamination and the component has been inspected and determined to be below the radiologic safe limits.	
Parallel or sequential functions: The sequential function entails decontamination then inspect to verify that component is below radiologic safe limits, if not, repeat decontamination process until either the component is decontaminated or if the component cannot be decontaminated then transferred back to the melter cave for disposal to the RWH system.	
Applicable Modes: Normal operations	

Function: R.3	Decontaminate Small Components
Detailed description: The small parts washer operation modes include immersion, recirculation, sprays, heating, and mechanical agitation modes using PWD/DIW with optional heating from HPS, sparging using ISA, and/or chemical injection. The small parts washer is located in the CDA and may be loaded either manually or remotely. The small parts washer drain line interfaces with the decontamination tank for final disposal to the RLD system.	
Initiation: This function initiates when components have been received that require decontamination.	
Termination: This function terminates upon completion of decontamination and the component has been inspected and determined to be below the radiologic safe limits.	

Parallel or sequential functions: The sequential function entails decontamination then inspect to verify that component is below radiologic safe limits, if not, repeat decontamination process until either the component is decontaminated or if the component cannot be decontaminated then transferred back to the melter cave for disposal to the RWH system.
Applicable Modes: Normal operations

Function: R.4	Swab Components
Detailed description: Prior to transfer to the CMA, items undergoing decontamination need to be inspected and verified that the component is below the radiologic limits. Components that cannot be decontaminated to acceptable levels are placed in a B-25 waste box for export or transferred back to the melter cave area for size reduction if necessary and placed in the solid waste baskets for transfer to the RWH system.	
Initiation: This function initiates when a component needs to be inspected and verified that it is below the acceptable radiologic limits prior to transfer to the CMA.	
Termination: This function terminates when the item has passed the inspection criteria. For those items that fail the inspection criteria, the function terminates when the item is placed in a waste box for export.	
Parallel or sequential functions: N/A	
Applicable Modes: Normal operations	

Function: R.5	Vacuum Contamination Using the Central Vacuum System
Detailed description: The central vacuum system is a run on demand system and is used to reduce gross contamination levels on equipment and within the melter cave and provide source extraction at the point of generation i.e., breakdown table (size reduction operation). The vacuum system is skid mounted to aide in retrieval for maintenance or repair. A header network is connected to the skid and hose assemblies and connection points are provided to allow manipulator operated tools to be used to connect the various vacuum system accessories. The vacuum system may also be utilized for housekeeping within the cave and external decontamination of solid waste baskets.	
Initiation: The central vacuum system is a run on demand system. This function initiates when necessary to remove existing particle contamination or when size reduction or other activities have the potential to spread particle contamination.	
Termination: This function terminates on demand or when particle generation activities cease.	
Parallel or sequential functions: The MSM at the breakdown area is used for central vacuum system hose manipulation. The power manipulator deployed disc grinder is equipped with a shroud to allow connection to a vacuum hose for contamination control at the point of generation.	
Applicable Modes: Normal operations	

Function: S.1	Reduce the Size of Jumpers
Detailed description: Solid waste items are size-reduced to fit into 55-gal solid waste drum basket or B-25 waste box, as necessary. Size reduction of the mechanical, electrical and instrument jumpers is accomplished with a combination of remote saw, grinder, shear and plasma torch manipulator operated tools. An in-cave breakdown table and work area is dedicated for size reduction of larger failed components. Through-wall hydraulic power manipulators (HPM) provide heavier lift capabilities to assist in size reduction activities and solid waste packaging. An out-cave water-glycol hydraulic power unit and hydraulic tubing network provide fluid power for the HPMs, fixed shears, decontamination pit shield lids and several other hydraulically powered devices. The HPM at the breakdown is used to hold equipment and operate remote tools during size reduction, to load heavier components into solid waste baskets and to reposition the breakdown area hoist as required.	

Initiation: This function initiates when solid waste items are needed to be size-reduced to fit into the 55-gal solid waste drum basket or B-25 waste box.
Termination: This function terminates when the item has been size reduced and placed in the appropriate waste storage container.
Parallel or sequential functions: N/A
Applicable Modes: Normal operations

Function: S.2	Reduce the Size of HLW Melter Components
Detailed description: Reduce the size of the spent HLW melter consumables (feed nozzle, bubblers, thermowell, thermocouples, discharge heater, and pour spout components) to fit into a solid waste basket using a combination of remote saw, grinder, shear and plasma torch. A fixed shear and waste basket loading stand are provided for size reduction and segregation of melter lid consumables. Through-wall hydraulic power manipulators (HPM) provide heavier lift capabilities to assist in size reduction activities and solid waste packaging. An out-cave water-glycol hydraulic power unit and hydraulic tubing network provide fluid power for the HPMs, fixed shears, decontamination pit shield lids and several other hydraulically powered devices. The HPM at the breakdown is used to hold equipment and operate remote tools during size reduction, to load heavier components into solid waste baskets and to reposition the breakdown area hoist as required.	
Initiation: This function initiates when the spent HLW melter consumables need reduced in size to fit inside the solid waste basket.	
Termination: This function terminates when the item has been reduced in sizes.	
Parallel or sequential functions: N/A	
Applicable Modes: Normal operations	

Function: S.3	Reduce the Size of Vessel Components
Detailed description: Reduce the size of the melter feed preparation vessel and melter feed vessel components including gaskets, agitators, thermowells, thermocouples, and bubblers to fit inside the solid waste basket or B-25 waste box using a combination of remote saw, grinder, shear and plasma torch. Items such as the transfer pumps, transfer pump motors, agitator motors, ADS pump body, ADS pump actuator and ADS pump valve and ejector that are not size reducible are transferred to the CDA or CMA for placement in a B-25 waste box.	
Initiation: This function initiates when the spent vessel components need to be size reduced prior to waste disposal.	
Termination: This function terminates when solid waste placed in waste basket or waste box.	
Parallel or sequential functions: Solid waste to be placed in the B-25 waste box is decontaminated prior to loading in the waste box located in the CDA or CMA areas.	
Applicable Modes: Normal operations	

Function: S.4	Reduce the Size of the SBS Components
Detailed description: Reduce the size of the SBS components including the gaskets, thermocouples, and cooling coils to fit inside the solid waste basket or B-25 waste box using a combination of remote saw, grinder, shear and plasma torch.	
Initiation: This function initiates when the SBS components have been replaced and the solid waste needs to be disposed.	
Termination: This function terminates when the component has been size reduced and placed in waste basket or waste box.	

Parallel or sequential functions: Solid waste to be placed in the B-25 waste box is decontaminated prior to loading in the waste box located in the CDA or CMA areas.
Applicable Modes: Normal operations

Function: S.5	Reduce the Size of the HEME Components
Detailed description: Reduce the size of the HEME components including the gaskets, thermocouples, thermowell, and filters (an individual filter fits inside a solid waste basket without size reduction), to fit inside the solid waste basket or B-25 waste box using a combination of remote saw, grinder, shear and plasma torch.	
Initiation: This function initiates when the HEME components have been replaced and the solid waste needs to be disposed.	
Termination: This function terminates when the component has been size reduced and placed in solid waste basket or waste box and exported.	
Parallel or sequential functions: Solid waste to be placed in the B-25 waste box are decontaminated prior to loading in waste box located in the CDA or CMA areas.	
Applicable Modes: Normal operations	

Function: T.1	Transfer the Solid Waste to the RWH
Detailed description: The system remotely transfers packaged waste to HLW Radioactive Solid Waste Handling System (RWH) through the waste transfer port. The waste transfer port allows solid waste baskets to be remotely transferred from the melter cave to System RWH (and back if deemed necessary). The waste transfer port is a 24" outside diameter pipe with a remotely removable lid on top and screened openings along the top portion of the pipe. The lid and screens prevent items from being dropped into the drum transfer tunnel and the screened areas at the top maintain an airflow path from the drum transfer tunnel when the lid is on. The internal pipe bore has centering features at the bottom to align and guide the solid waste basket into the drum.	
Initiation: This function initiates when packaged solid waste is required to be transferred to RWH.	
Termination: This function terminates when transfer of packaged solid waste is complete.	
Parallel or sequential functions: The waste transfer port allows unrestricted airflow from the drum transfer tunnel to the melter cave to maintain C5 cascading ventilation from the drum transfer tunnel.	
Applicable Modes: Normal operations	

Function: T.2	Remotely Retrieve and Transfer Solid Waste
Detailed description: The system has provisions to transfer solid waste for packaging in B-25 waste boxes to the CDA or CMA after the waste has been sufficiently decontaminated. Solid waste management has the option of size reducing some items and placing them in solid waste baskets or packaging in B-25 waste boxes.	
Initiation: This function initiates when the need to package the solid waste in a B-25 waste box.	
Termination: This function terminates when the solid waste has been decontaminated and packaged in a B-25 waste box..	
Parallel or sequential functions: N/A	
Applicable Modes: Normal operations	

Function: T.3	Remotely Retrieve and Transfer an HLW Canister
Detailed description: The system includes the capability of retrieving an HLW canister from the canister handling system by first removing and storing the melter cave removable false flooring around the pour spout. Then the main melter crane and canister grapple are used to hoist the canister to the melter cave area. This is a contingency operation for a case where the HLW canister operation cannot be completed and the HLW canister needs to be removed so that HLW vitrification can continue. Provisions to dispose of the HLW canister will be decided by operations.	

Initiation: This function is initiated in the advent of an off-normal condition where operations has determined that a HLW canister needs to be retrieved to the melter cave area.
Termination: This function terminates when the HLW canister has been retrieved and the HLW process systems are back in operating phase.
Parallel or sequential functions: N/A
Applicable Modes: Off-normal operations

Function: U.1	Facilitate Remote Viewing of Remote Operations via CCTV
Detailed description: HLW process and mechanical handling CCTV (PTJ) system provides cameras to the melter cave, crane decontamination area, equipment decontamination area, crane maintenance area and equipment maintenance area. These cameras are accessed via local operator interface panels which provide viewing capabilities to aid in maintenance and for viewing of other mechanical handling equipment activities.	
Initiation: This function initiates when the cameras are turned on.	
Termination: This function terminates when the cameras are turned off.	
Parallel or sequential functions: N/A	
Applicable Modes: All operations	

Function: V.1	Provide Personnel Access to the CMA and CDA
Detailed description: Personnel access to the crane maintenance and crane decontamination areas are achieved through shielded personnel access doors (SPADs) located in these respective areas for hands-on maintenance activities.	
Initiation: This function initiates when the HLW facility is in startup operations or as required during operations.	
Termination: This function terminates when HLW glass production operations are complete.	
Parallel or sequential functions: N/A	
Applicable Modes: All operations	

Function: W.1	Support the Non-Safety Monitoring, Control and Communication Functions

Detailed description: All functions of the HSH system are handled remotely from control rooms, behind LOI shielded windows, or other protected areas.

The MHJ provides monitoring and control to the listed mechanical handling equipment:

- Main melter cranes (HSH-CRN-00001/00014)
- Power manipulator cranes (HSH-MANIP-00010/00023)
- Shield Lid decontamination pit (HSH-MHAN-00032/00060)
- Crane decontamination area shield doors (HSH-DOOR-00001/00002/00005/00006)
- Crane maintenance area shield doors (HSH-DOOR-00003/00004/00007/00008)
- Posting Port (HSH-DD-TWDVC-00001/00002)
- Melter Import winch limit switch assembly (HSH-MHAN-00049)
- Melter import winch (HSH-RCVY-00005)
- Cable reeling system main crane (HSH-RCVY-00014/00019)
- Cable reeling system power manipulator crane (HSH-RCVY-00008/00018)

The MHJ provides monitoring and control to the following equipment recovery devices:

- Melter crane
- Power Manipulator crane
- Shuttle cart

The HSH provides non-safety interlocks for the following functions:

- Hydraulic Power Unit (HSH-MHAN-00015, HSH-MHAN-00067)

The following equipment is operated independently of the ICN and is remotely or locally controlled:

- Decontamination area crane
- Maintenance area crane
- Maintenance pit jib crane
- Breakdown table hydraulic power manipulator
- Sorting table hydraulic power manipulator
- Central vacuum system
- Melter import winch and limit switch assembly
- Breakdown area hoist
- Size reduction system
- Fixed shear
- Shuttle cart
- Posting port
-

Initiation: This function initiates when the HLW facility begins startup operations.

Termination: This function terminates when HLW glass production operations are complete.

Parallel or sequential functions: N/A

Applicable Modes: All operations

Function: W.2	Support the Active Safety Instruments and Functions Through the Interface with the PPJ System or engineered as local safety instrumented function

Detailed description: Support the following safety interlocks:

- Melter Cave 1 Posting Port Gamma Monitor Interlock
- Melter Cave 2 Posting Port Gamma Monitor Interlock
- Melter Cave 1 Posting Port Door-to-Door Interlock
- Melter Cave 2 Posting Port Door-to-Door Interlock

Initiation: This function is initiated when the HLW facility begins startup operations.

Termination: This function terminates when HLW glass production operations are complete.

Parallel or sequential functions: N/A

Applicable Modes: All operations

Function: X.1	Provide Adequate Shielding from Radionuclide Sources

Detailed description: Provide adequate shielding from radionuclide sources on the CMA and CDA equipment doors, personnel access doors, shield windows and decontamination pit hatch to prevent radionuclide exposure to workers.

Shield doors and shield windows provide a shielding function and can be in a horizontal or vertical configuration. The shield doors incorporate proximity switches indicating a "closed" position. A guide system or shield blocks are used to provide radiological shielding for shine paths created by gaps between the bottom of the door and the floor.

Initiation: This function initiates when the HLW facility begins startup operations.

Termination: This function terminates when HLW glass production operations are complete.

Parallel or sequential functions: N/A

Applicable Modes: All operations

Function: X.2	Provide Confinement from Airborne Radionuclides
Detailed description: The SS shield doors provide a C5V boundary confinement function by providing an engineered air gap to maintain cascade airflow, the SC SPADs provide a C5V boundary confinement function by ensuring the SPADs fully seal against their mating surface.	
Initiation: This function initiates when the HLW facility begins startup operations.	
Termination: This function terminates when HLW glass production operations are complete.	
Parallel or sequential functions: N/A	
Applicable Modes: All operations	

Function: Y.1	Receive Electrical Power
Detailed description: Electrical power to the HSH equipment and instruments is supplied by the LVE.	
Initiation: This function initiates when the HLW facility begins startup operations.	
Termination: This function terminates when HLW glass production operations are complete, or on loss of site power.	
Parallel or sequential functions: N/A	
Applicable Modes: Normal operations	

Function: Z.1	Receive Breathing Service Air
Detailed description: This function is to provide breathing air to manifolds such that personnel entering the CMA or CDA for general maintenance have safe breathable air.	
Initiation: This function initiates when the HLW facility begins startup operations.	
Termination: This function terminates when HLW glass production operations are complete.	
Parallel or sequential functions: N/A	
Applicable Modes: All operations	

Appendix C Active Safety Instruments and Functions

The listed instruments are designated as having active safety functions. Information in the table below reflects the current design of active safety instruments, including functions, and safety designations per the P&IDs and associated equipment and instrument lists. In some cases the current safety classification of the SSCs in design is known to exceed the design requirements. The information will be updated as needed to reflect changes to the design. The information below is provided in support of Plant Engineering and Operations and does not represent design requirements.

Function Title	Safety Designation	Sensors	Final Control Elements	Functional Description
Melter Cave 1 Posting Port Gamma Monitor Interlock	SS	HSH-RE-2801 HSH-RS-2801 HSH-ZS-0515 HSH-ZS-0516	TBD	High radiation in posting port, while in-cave door is closed, prevents out-cave door from opening.
Melter Cave 2 Posting Port Gamma Monitor Interlock	SS	HSH-RE-3701 HSH-RS-3701 HSH-ZS-3805 HSH-ZS-3806	TBD	High radiation in posting port, while in-cave door is closed, prevents out-cave door from opening.
Melter Cave 1 Posting Port Door-to-Door Interlock	SS	HSH-ZS-0503 HSH-ZS-0515 HSH-ZS-0516 HSH-ZS-0520 HSH-ZS-0534 HSH-ZS-0535	TBD	If position switches for both shield doors detect doors are not closed, both doors are stopped.
Melter Cave 2 Posting Port Door-to-Door Interlock	SS	HSH-ZS-3805 HSH-ZS-3806 HSH-ZS-3807 HSH-ZS-3811 HSH-ZS-3834 HSH-ZS-3835	TBD	If position switches for both shield doors detect doors are not closed, both doors are stopped.

Notes:

Appendix D System Procedures (Reserved)

Appendix E System History (Reserved)

Issued by
RPP-WTP PDC

Pretreatment Facility Ultrafiltration Process System Design Description

Document title:

Document number: 24590-PTF-3ZD-UFP-00001

Revision number: A

Type: ☑ System Design Description
☐ Facility Design Description

Originator(s): David Mears

Checked by: Jason Appleby

Checker's signature: _____ (Signature) 7/30/15 (Date)

Concurrence: Jeff Monahan for Mark Johnson

Concurrence signature: _____ (Manager of Production Engineering Signature) 8/11/15 (Date)

Concurrence: Ian Milgate

Concurrence signature: _____ (Project Technical Director and Design Authority Signature) 8/11/15 (Date)

Approved by: Natalie Harkey

Approver's position: Systems Engineering Manger

Approver's signature: _____ (Signature) 8/11/2015 (Date)

Validation

Appl.	Requirement Area	Requirement Developer	Signature	Date
☐	Architectural Design			
☐	Civil/Structural Design			
☑	Controls & Instrumentation Design	WAYNE UNDERHILL		7/9/15
☑	Electrical Design & AHJ	Gary E. Lucke		7/10/15
☐	Fire Protection Engineering			
☐	HVAC Design			
☐	Mechanical Handling Design			
☑	Mechanical Systems Design	JULIAN LEHAM		07.21.15
☑	Plant Design	John Schuette		7-15-15
☑	Process Engineering	ROBERT VOKE	E-MAIL CONCUR	7-22-15
☐	Interface (External)			
☐	Interface (Internal)			
☑	System Functions and Requirements	Phil Townsend		7/23/15
☑	Equipment Environmental Qualification	Gouri Rajagopal		7/21/15
☑	Materials Engineering / Technology	Grant Marr		7/13/15
☐	Plant Software Design			
☑	Environmental Protection (ESH)	Ty Teigen		7-15-15
☑	Nuclear Safety Engineering	GREG TIDD		7/14/15
☐	Criticality Safety			
☑	Radiological Engineering	ROBERT ENGLISH	E-MAIL CONCUR	7/9/15
~~☑~~	~~Industrial Safety/Hygiene (ESH)~~			7/13/15
☐	Mission (WTP Contract functional/ performance rqmts)			
☑	Operations Requirements Document (Plant Ops)	GARY HARVEY	E-MAIL CONCUR	7/14/15
☑	Quality Assurance	VIRGINIA D. CLEARY-IVANOFF	E-MAIL CONCUR	7/10/15
☐	Safeguards & Security			
☐	Startup			
☐	Transportation & Logistics			

* Validation not required for alpha/preliminary design description documents.

History Sheet

Rev	Reason for revision	Revised by
A	Initial Issue Contents of the this SDD replace all but sections 5 thru 8 of 24590-PTF-3YD-UFP-00001, Rev. 2, *System Description for the Ultrafiltration Process System (UFP)*	D. Mears

Contents

Validation ii

History Sheet iii

1 Introduction 1

1.1 System Identification 1

1.2 Limitations and Scope 1

1.3 Ownership and Maintenance 2

1.4 Definitions/Glossary 2

1.5 Acronyms and System Designators 3
1.5.1 Acronyms 3
1.5.2 System Designators 4

2 General Overview 5

2.1 System Functions/Safety Functions 8

2.2 System Classification 16

2.3 Basic Operational Overview 16

3 Design Requirements 18

3.1 Requirements 18

3.2 Bases 18

3.3 References 18

3.4 General Requirements 18
3.4.1 Mission and Functional/Performance Requirements 18
3.4.2 Nuclear Safety, ALARA, Environmental, and Other Regulatory Requirements 27
3.4.3 System Interface Requirements 39
3.4.4 Other Technical, Specialty, Operations and Maintenance Requirements 42

3.5 Vessels 42
3.5.1 Mission and Functional / Performance Requirements (Including States/Modes) 42
3.5.2 Nuclear Safety, ALARA, Environmental and Other Regulatory Requirements 46
3.5.3 System Interface Requirements 48
3.5.4 Other Technical, Specialty, Requirements, Operations and Maintenance Requirements 50

3.6 Piping, Jumpers and Inline Components 50
3.6.1 Mission and Functional Performance (Including States/Modes) 50
3.6.2 Nuclear Safety, ALARA, Environmental, and Other Regulatory Requirements 52
3.6.3 System Interface Requirements 54
3.6.4 Other Technical, Specialty, Operations and Maintenance Requirements 54

3.7 Ultrafilters 54
3.7.1 Mission and Functional Performance (Including States/Modes) 54
3.7.2 Nuclear safety, ALARA, Environmental, and Other Regulatory Requirements 56
3.7.3 System Interface Requirements 56
3.7.4 Other Technical, Specialty, Operations and Maintenance Requirements 57

3.8 Pulse Jet Mixers, Spargers, Reverse Flow Diverters and Jet Pump Pairs 57
3.8.1 Mission and Functional Performance (Including States/Modes) 57

3.8.2 Nuclear Safety, ALARA, Environmental and Other Regulatory Requirements 59
3.8.3 System Interface Requirements 60
3.8.4 Other Technical, Specialty, Operations and Maintenance Requirements 60

3.9 Pumps 60
3.9.1 Mission and Functional / Performance Requirements (Including States/Modes) 60
3.9.2 Nuclear Safety, ALARA, Environmental, and Other Regulatory Requirements 61
3.9.3 System Interface Requirements 61
3.9.4 Other Technical, Specialty, Operations and Maintenance Requirements 61

3.10 Bulges 61
3.10.1 Mission and Functional / Performance Requirements (Including States/Modes) 61
3.10.2 Nuclear Safety, ALARA, Environmental, and Other Regulatory Requirements 62
3.10.3 System Interface Requirements 62
3.10.4 Other Technical, Specialty, Operations and Maintenance Requirements 62

3.11 Heat Exchangers 63
3.11.1 Mission and Functional / Performance Requirements (Including States/Modes) 63
3.11.2 Nuclear Safety, ALARA, Environmental and Other Regulatory Requirements 64
3.11.3 System Interface Requirements 64
3.11.4 Other Technical, Specialty, Operations and Maintenance Requirements 64

3.12 Monitoring and Controls Requirements 64
3.12.1 Mission and Functional/Performance Requirements 64
3.12.2 Nuclear Safety, ALARA, Environmental and Other Regulatory Requirements 66
3.12.3 System Interface Requirements 71
3.12.4 Other Technical, Specialty, Operations and Maintenance Requirements 74

3.13 Other Structure, Systems and Components Requirements 76
3.13.1 Mission and Functional/Performance Requirements 76
3.13.2 Nuclear Safety, ALARA, Environmental and Other Regulatory Requirements 77
3.13.3 System Interface Requirements 78
3.13.4 Other Technical, Specialty, Operations and Maintenance Requirements 78

3.14 Relevant Codes and Standards 78
3.14.1 Codes of Record 78
3.14.2 WTP Design Criteria and (General) Specifications 80

4 System Description 83

4.1 Configuration Information 83
4.1.1 Description of System, Subsystems, and Major Components 83
4.1.2 Boundaries and Interfaces 83
4.1.3 Physical Layout and Location 83
4.1.4 Principles of Operation 83
4.1.5 System Reliability Features 83
4.1.6 System Control Features 83

4.2 Operations 83
4.2.1 Initial Configuration (Pre-startup) 83
4.2.2 System Startup 83
4.2.3 Normal Operations 83
4.2.4 Off-Normal Operations 84
4.2.5 System Shutdown 84
4.2.6 Safety Management Programs and Administrative Controls 84

4.3 Testing and Maintenance 84
4.3.1 Temporary Configurations 84
4.3.2 TSR-Required Surveillances 84

4.3.3 Non-TSR Inspections and Testing 84
4.3.4 Maintenance 84
4.4 Supplemental Information 84
5 References and Design Documents List 84
5.1 Source / Basis References 84
5.2 Other References 85
5.3 System Design Documents 85

Appendices

Appendix A Test Objectives, Conditions, and Acceptance Criteria A-1
Appendix B Descriptions of System Functional Flow and Interactions B-1
Appendix C Active Safety Instruments and Functions C-1
Appendix D System Procedures D-1
Appendix E System History E-1

Tables

Table 2-1 Functional Analysis and Crosswalk to Requirements 10
Table 3-1 Pretreatment Facility Design Capacity 19
Table 3-2 UFP System Equipment Components Design Life 24
Table 3-3 UFP Safety Designations 28
Table 3-4 UFP Seismic Design 32
Table 3-5 UFP System Interfaces 39
Table 3-6 UFP Tank Capacities 43
Table 3-7 Reagent Addition Capabilities to Vessels 48
Table 3-8 UFP Sampling Locations 50
Table 3-9 Ultrafilter Capacities 55
Table 3-10 PTF UFP System Applicable Codes and Standards 78
Table 3-11 WTP Design Criteria, Guides, and General Specifications Applicable to PTF UFP Systems 80

Figures

Figure 2-1 Ultrafiltration Process System Context Diagram 6
Figure 2-2 UFP System Simplified Flow Diagram* 7
Figure 2-3 Ultrafiltration Process Functional Block Diagram* 9

1 Introduction

1.1 System Identification

This system design description (SDD) defines the technical and functional/performance and permitting requirements for the pretreatment facility (PTF) ultrafiltration process (UFP) system. This document details the waste treatment requirements, environmental compliance requirements, and authorization basis requirements of the UFP system as currently known and understood. This SDD also describes the process and functional design requirements of the filtration systems, including the following:

- Services and utility requirements, operating materials and supplies, and other external interfaces
- Operations limits and design bases
- Other criteria and requirements pertinent to the design of the UFP system.

1.2 Limitations and Scope

The scope of this document is to provide an authoritative source for the collected set of requirements applicable to the PTF Facility UFP system, inclusive of interface requirements with other systems. The SDD scope is limited to PTF Facility UFP system features that protect personnel, the environment, equipment, and/or support production in the PTF Facility. The SDD is prepared in accordance with 24590-WTP-3DP-G04B-00093, *System and Facility Design Descriptions*. The intended use of these collected requirements is to establish the following:

- Inform the PTF Facility UFP system design effort
- Provide a validated basis upon which to confirm implementation of design requirements
- Provide the expected means of verification for requirements, including those that are post-construction (i.e., startup and commissioning test objectives and acceptance criteria)

All requirements established in this document are to be implemented and verified in design and/or physical configuration using a graded approach commensurate with importance and risk.

Where numeric values are provided within requirements in Section 3, these values are provided without additional margin. For example if a value is established in the Basis of Design, no attempt is made to remove any margin that may or may not have gone into the establishment of that value, neither has any margin been added. Where values are stated as minimums or maximums, there is no expectation that any additional margin be applied in the verifications that the design requirements have been met. Testing that is required to be performed in accordance with external codes and standards must follow the rules established in those documents.

This document is intended to be used in support of design development, design verification, turnover, start-up testing, and commissioning activities. This document is intended to be maintained current relative to changes to source requirements documents. Updates shall be made concurrent with changes to source requirements or implementation, or shall be tracked for completion in accordance with 24590-WTP-GPG-ENG-0170, *Impact Evaluation*.

Note that contents of this document reflect the current conceptual design of the UFP system. The system functions, interfaces and design requirements may change as a result of on-going efforts to resolve technical concerns. In response, this document will be updated as needed.

Engineers are expected to use the requirements in Section 3 of this document as input for design development without recourse to the upper-tier source documents or searches of the Design Criteria Database (Technical Requirements Management System). Design engineers are still required to ensure that requirements contained with the discipline/functional standards incorporated by reference in section 3 are followed. These documents contain additional criteria that are based on applications of external codes/standards, corporate best practices, and engineering management expectations for a consistent approach to design.

Certain requirement statements in this document are preceded by a **[HOLD]** notation. This notation is used when there are unresolved technical issues, known inconsistencies among source requirements, or other management suspensions of work requiring resolution. Requirements with the **[HOLD]** notation may be used to proceed with preliminary or committed design but shall not be used in support of fabrication or construction until the **[HOLD]** is removed.

Certain requirements statements in the SDD contain a TBD (to be determined). This notation is used where important derived requirements are to be established and/or where existing preliminary calculations have been done but require verification, confirmation, or commitment to be established.

Section 4 of this document is currently reserved for future inclusions of contents related to system operations and maintenance. This further content will be provided consistent with expectation of DOE-STD-3024-2011, *Content of System Design Descriptions*.

1.3 Ownership and Maintenance

The Design Authority (DA) organization is responsible for the preparation and maintenance of this document through turnover of the included systems to Operations. Thereafter, maintenance of this document is the responsibility of the Plant Engineering organization; however, the Engineering DA organization retains responsibility for the establishment and definition of design requirements.

1.4 Definitions/Glossary

Envelope A – Waste envelope containing radionuclide components including ^{137}Cs, as well as certain chemical species, at concentrations that result in the need for prior treatment in order to ensure LAW glass specifications (Contract Specification 2, Contract No. DE-AC27-01RV14136) can be met.

Envelope B – Waste envelope containing higher concentrations of ^{137}Cs than Envelopes A and C. The ^{137}Cs requires removal to ensure LAW glass specifications can be met. This envelope also contains higher concentrations of components such as chlorides, chromates, fluorides, phosphates, and sulfates that may limit the waste loading in the glass.

Envelope C – Waste envelope containing organically complexed strontium and transuranics (Sr/TRU) wastes that require removal. The ^{137}Cs also requires removal to ensure LAW glass specifications can be met. Envelope C can also contain a higher concentration of sulfate than Envelope A.

Envelope D – Envelope D contains the HLW feed that is a mixture of liquid (Envelopes A, B, or C) and insoluble (high-activity) solids. The insoluble solids fraction is designated as waste Envelope D.

1.5 Acronyms and System Designators

1.5.1 Acronyms

A, I, D, T	analysis, inspection, demonstration, test
AISC	American Institute of Steel Construction
ALARA	as low as reasonably achievable
ANSI	American National Standards Institute
API	American Petroleum Institute
ASME	American Society of Mechanical Engineers
ASTM	American Society for Testing and Materials
BOD	Basis of Design
BRKPT	break-pot
CCN	correspondence control number
CIX	cesium ion exchange
COM	commissioning
CTN	component tag number
DBE	design basis event
DOE	US Department of Energy
DVR	design verification report
EQP	equipment qualification package
FAC	functional acceptance criteria
FC	fail closed
FO	fail open
fps	feet per second
GTC	general test criteria
HGR	hydrogen generation rate
HLW	HLW lag storage and feed blending process
HLW	High-Level Waste (Facility)
HPAV	hydrogen in piping and ancillary vessels
IEEE	Institute of Electrical and Electronics Engineers
IHLW	immobilized high-level waste
ILAW	immobilized low activity waste
IX	ion exchanger
LFL	lower flammability limit
MR	material requisition
MTG	metric tons of glass
NPH	natural phenomena hazard
NSE	Nuclear Safety Engineering
ORD	Operations Requirements Document
P&ID	piping and instrumentation diagram
PAM	post-accident monitoring
PDSA	preliminary documented safety analysis
PJM	pulse jet mixer
PP	pulse pot
PT	Pretreatment (Facility)
PTF	Pretreatment (Facility)
REC	receiving
RES	radiation exposure standards

RFD	reverse flow diverter
SC	safety class
scfm	standard cubic feet per minute
s.g.	specific gravity
SHSVD	standard high-solids vessel design
SRD	Safety Requirements Document
SS	safety significant
SSC	structures, systems, or components
SSRS	safety system requirement specifications
SU	startup
SUB	subcontractor
SUP	supplier
TRU	transuranics
TSR	technical safety requirement
UF	ultrafiltration
WIPSD	WTP Integrated Processing Strategy Description
WTP	Hanford Tank Waste Treatment and Immobilization Plant

1.5.2 System Designators

AFR	anti-foaming reagent (system)
ASX	auto-sampling system
CHW	chilled water system
CXP	cesium ion exchange process system
DIW	demineralized water (system)
FEP	waste feed evaporation process system
FRP	waste feed receipt process system
HLP	high-level waste lag storage and feed blending process system
HPS	high pressure steam system
ISA	instrument service air system
LAW	Low activity waste
LVE	low voltage electrical (480/208/120 V) system
NAR	nitric acid reagent system
PCJ	process control system
PCW	plant cooling water system
PIH	pretreatment in-cell handling system
PJV	pulse jet ventilation system
PPJ	programmable protection system
PSA	plant service air system
PSW	process service water
PVP	pretreatment vessel vent process (system)
PVV	process vessel vent exhaust system
PWD	plant wash and disposal process (system)
RLD	radioactive liquid waste disposal system
SHR	sodium hydroxide reagent system
SPR	sodium permanganate reagent system
STR	strontium nitrate reagent system
TCP	treated LAW concentrate storage process system
UFP	ultrafiltration process system

2 General Overview

The Ultrafiltration Process (UFP) system receives supernatant liquid waste (Low-Activity Waste or LAW) from the Waste Feed Receipt Process (FRP) system and HLW solids bearing waste (High-Level Waste or HLW) from the HLW Lag Storage and Feed blending Process (HLP) system. These waste feeds are blended with evaporator concentrate from the Waste Feed Evaporation Process (FEP) system into a single stream (ultrafiltration feed). If warranted, the feed from FRP may be treated to remove (i.e., precipitate) dissolved strontium (Sr) and complexed transuranic elements (TRU) from the liquid fraction prior to filtration.

Solids are separated from the liquid fraction of the ultrafiltration feed using cross-flow ultrafiltration and are concentrated to improve HLW vitrification efficiency (i.e., remove the bulk of the water) and minimize the number of HLW canisters produced. Removing the solids from the liquid is necessary for meeting the low-activity waste (LAW) acceptance criteria and also protects the operation of downstream ion exchange columns. Chemical treatment of separated solids is utilized to prepare the waste for downstream processing steps. Sludge processing methods such as caustic leaching and/or oxidative leaching may be employed, depending on the composition of the solids, in conjunction with solids washing to reduce the number of HLW canisters produced.

The concentrated and treated HLW solids are transferred to the HLP system after sufficient processing has been completed. The liquid separated by ultrafiltration (permeate) is either collected in permeate collection vessels and transferred to the Cesium Ion-Exchange Process (CXP) system for further processing or recycled through the Plant Wash and Disposal (PWD) system to the FEP system.

Figure 2-1 provides the contextual depiction of the PTF UFP system in terms of its primary interrelationships with other systems and utilities. These diagrams do not differentiate between utilities that have both normal and safety service provisions. These diagrams are used in support of functional and performance definition at the system level. See Section 1.5.2 for a list of relevant system designations. Bold lines are meant to emphasize the more essential functions of the system.

Figure 2-2 provides a simplified process flow diagram of the overall PTF UFP system. Blue arrows are used in these figures to highlight the primary flow path of the waste liquid in the system, orange arrows illustrate the steam lines, yellow lines show chemical reagents and black arrows illustrate permeate.

Figure 2-1 Ultrafiltration Process System Context Diagram

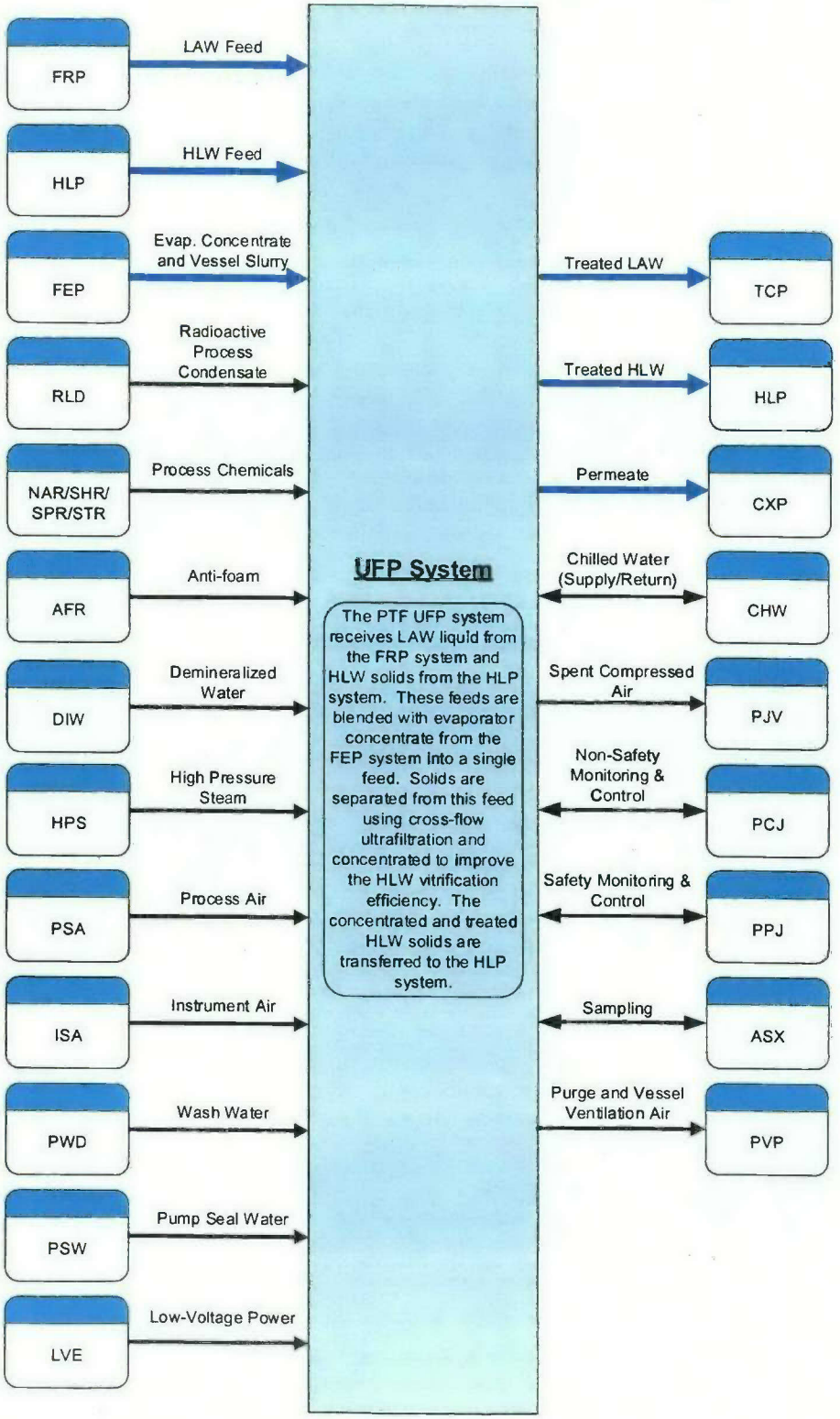

Figure 2-2 UFP System Simplified Flow Diagram*

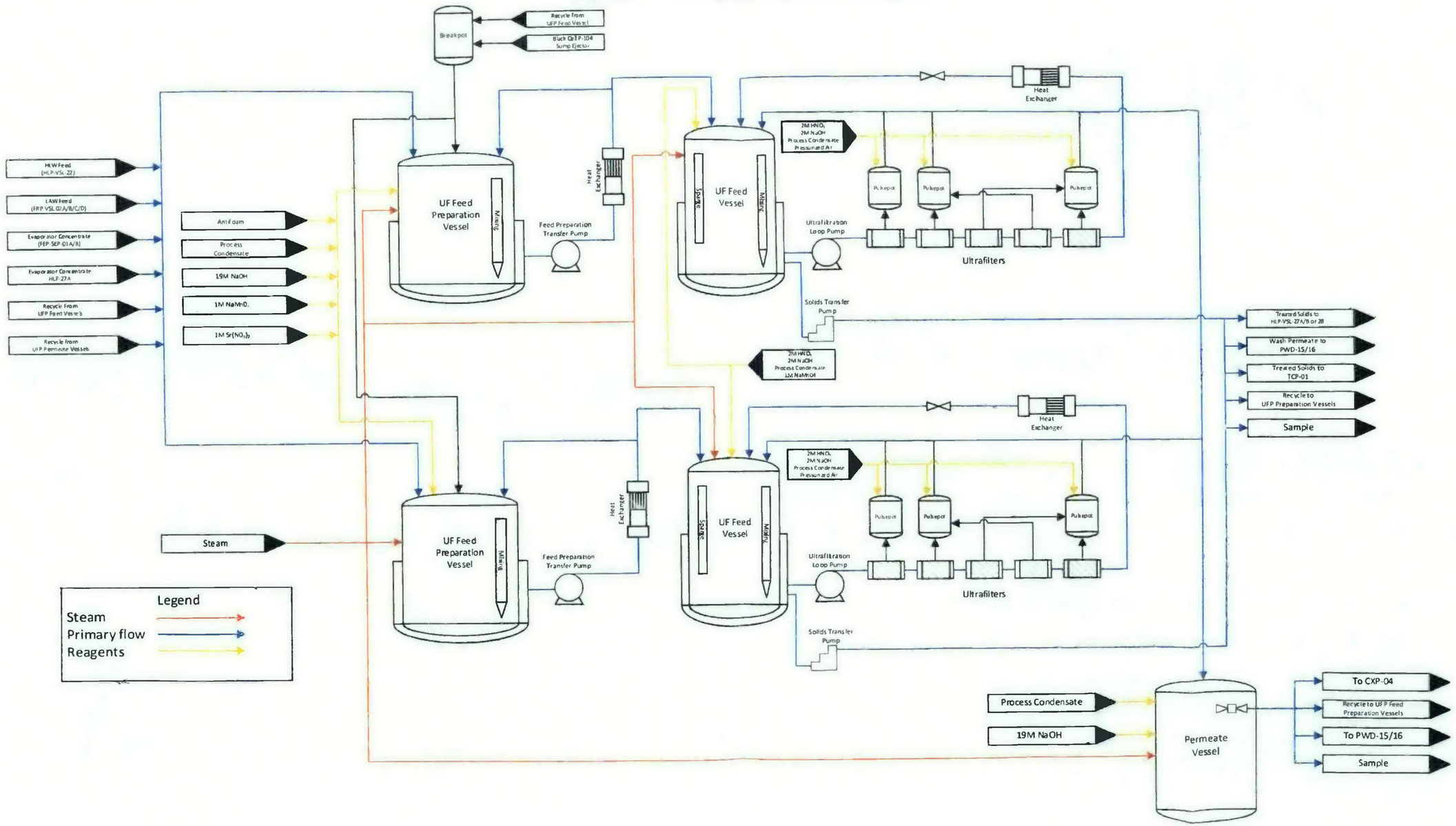

*This reflects the current design; does not reflect the proposed standard high solids vessel design concept.

2.1 System Functions/Safety Functions

This section defines the UFP system functions and attributes that need to be addressed by the system design. Figure 2-3 provides the functional block diagram for the UFP system, indicating the internal and external systems and utilities that provide the primary support or interface for that function. Section 3 provides the design and performance design requirements to meet both functional and other requirements.

System interfaces are provided for reference only.

Figure 2-3 Ultrafiltration Process Functional Block Diagram*

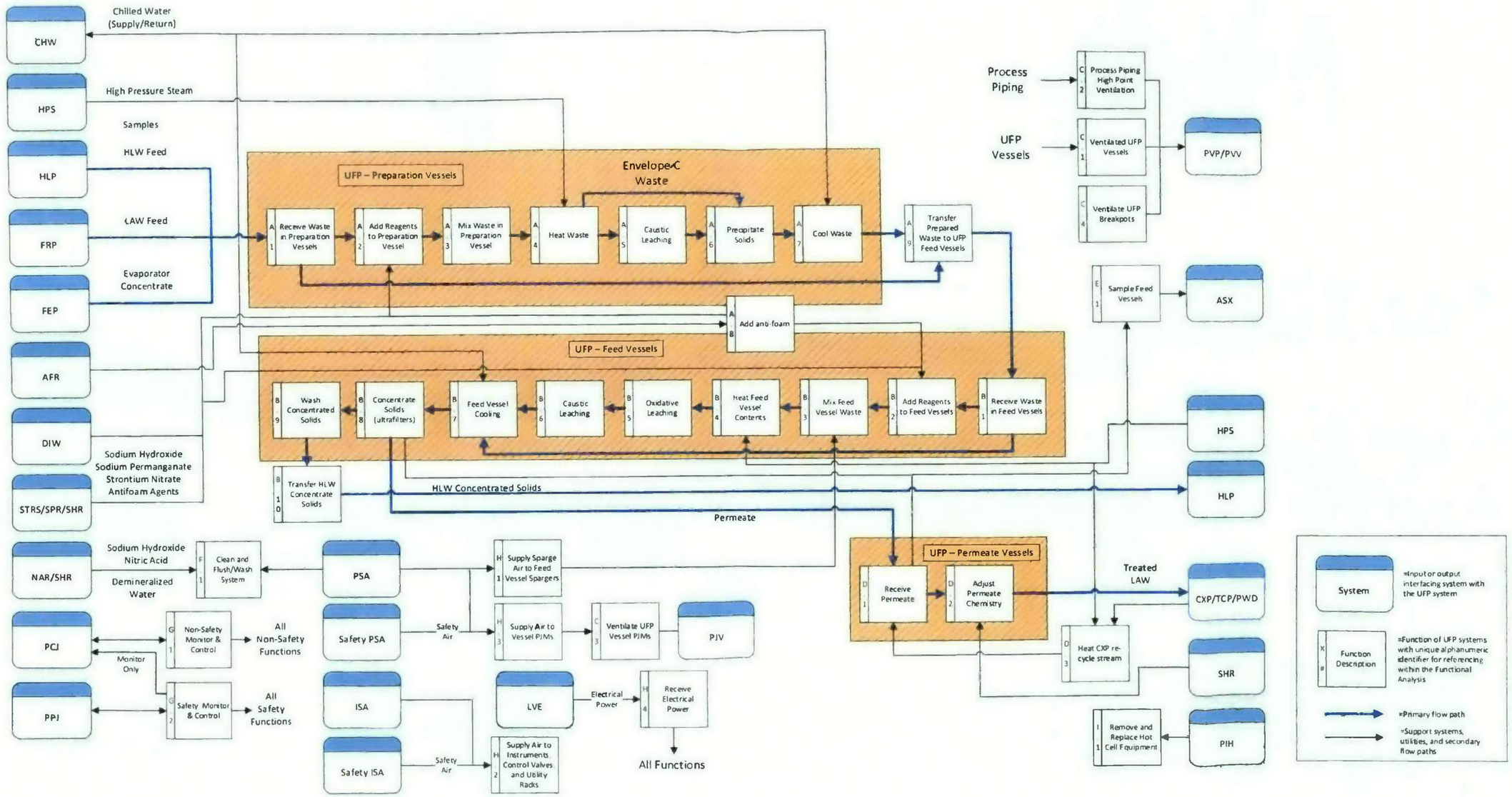

*This reflects the current design; does not reflect the proposed standard high solids vessel design concept.

The functions included in Figure 2-3 are the primary and secondary level functions of the UFP system. These functions are further described in Table 2-1. Where appropriate to support definition of functional and design requirements, functions have been further decomposed and additional levels of supporting functions are also described. The requirement section number provides the location of the applicable functional analysis incorporated into system requirements.

Appendix B provides a further decomposition of system functions, including initiating, terminating, and integrating events and functions

Table 2-1 Functional Analysis and Crosswalk to Requirements

Reference	Functional Analysis Description	Requirement Section No.
A.	**Prepare Waste in Feed Preparation Vessels**	N/A
A.1	Receive Waste in Preparation Vessels – The UFP receives waste from: • LAW feed from the FRP system • HLW feed from the HLP • Evaporator concentrate from the FEP to optimize production of HLW and LAW facilities.	3.4.1.1, 3.5.1.2
A.2	Add Reagents to Preparation Vessels – The system adds processing reagents to: • Precipitate solids using sodium permanganate (1M maximum strength $NaMnO_4$) and strontium nitrate (1M maximum strength $Sr(NO_3)_2$) • Wash solids with process condensate or dilute NaOH • Leach solids with sodium hydroxide (19M NaOH)	3.4.1.2, 3.4.1.3, 3.4.1.4, 3.5.3.1
A.3	Mix Waste in Preparation Vessels – The following mixing functions are applicable to UFP feed preparation vessels: • Mix to support heat transfer for cooling vessel contents prior to transfer out • Mix to release hydrogen from the waste • Mix to prevent heel build-up • Mix to support reagent blending • Mix to support blending to optimize reaction rates • Mix to support sampling	3.4.3.1, 3.8.1.2
A.4	Heat Waste – The contents of the preparation vessels are heated up to 176 to 194 °F (80 to 90 °C) using internal steam sparge rings, which are submerged in the slurry. The slurry is heated during caustic leaching to increase the kinetics for aluminum dissolution reactions	3.5.1.3, 3.5.1.6, 3.11.1.2, 3.12.1.2
A.5	Caustic Leaching – This process of the digestion (dissolving into solutions) aluminum into solution by Caustic and heating.	3.4.1.2
A.6	Precipitate Solids – The system has the capability to treat some wastes (envelope C only) to remove ^{90}Sr and TRU constituents via precipitation to ensure that the radionuclide limits in the LAW glass are met. Initially 19M NaOH is added, followed by 1M maximum strength $Sr(NO_3)_2$ to make the waste nominally 1M free hydroxide (OH) and up to 0.075M Sr^{2+}. These conditions precipitate the ^{90}Sr as $SrCO_3$. Finally, enough 1M $NaMnO_4$ is added to achieve up to 0.05M MnO_4 solution to precipitate the TRU components. The primary mechanism for ^{90}Sr removal is dilution with added nonradioactive strontium nitrate combined with an increase in temperature to reduce the strontium solubility. The reaction chemistry of Mn species relevant to the mechanisms (i.e., precipitation, adsorption, and oxidation) of TRU removal is complex and outside the scope of this system description.	3.4.1.4

Reference	Functional Analysis Description	Requirement Section No.
A.7	Cool Waste – Contents of the feed preparation vessel are cooled following the leaching and precipitation processes. Cooling is provided by jackets on the feed preparation vessels and/or by utilizing the external heat exchangers as allowed by the capability of UFP feed preparation pumps.	3.5.1.3, 3.11.1.2
A.8	Add anti-foam – Addition of anti-foaming reagents (AFR) will prevent foaming, as part of a foaming mitigation strategy for UFP vessels and ultrafilters.	3.5.3.1
A.9	Transfer Prepared Waste to Feed Vessels – The waste slurry is transferred from the UFP preparation vessels to the UFP feed vessels where the separation of solids from the supernatant is performed. The UFP feed preparation transfer pumps will normally transfer large initial batches to UFP-VSL-00002A/B followed by smaller sub-transfers. During solids concentration waste feed is received from UFP-VSL-00001A/B, and the solids are concentrated using ultrafiltration and additional waste feed will be added incrementally as permeate is removed from the vessel.	3.4.1.1, 3.5.1.2
B.	**Filtration Process**	N/A
B.1	Receive Waste in Feed Vessels – A large initial batch of waste is transferred from the feed preparation vessels to the receiving feed vessel. After receiving the initial feed batch volume, concentration is started. As permeate is removed from the ultrafiltration loop more feed is added to maintain vessel level within a desired range. Concentration continues until the target volume is achieved or the filter flux drops to a de minimus value.	3.4.1.1, 3.5.1.2
B.2	Add Reagents to Feed Vessels – The system adds processing reagents to: • Precipitate solids using sodium permanganate (1M maximum strength $NaMnO_4$) and strontium nitrate (1M maximum strength $Sr(NO_3)_2$) • Wash solids with process condensate or dilute NaOH • Leach solids with sodium hydroxide (19M NaOH) • Oxidatively leach solids with sodium permanganate (1M $NaMnO_4$)	3.4.1.4, 3.5.3.1
B.3	Mix Feed Vessel Waste – The following mixing functions are applicable to UFP feed vessels: • Mix to support heat transfer for cooling vessel contents prior to ultrafiltration • Mix to prevent accumulation of undissolved solids at pump suction • Mix to support liquid blending for washing • Mix to support blending to optimize reaction rates in oxidative and caustic leaching • Mix to support sampling accuracy for process control, including process hold points. • Mix to support sampling	3.8.1.2
B.4	Heat Feed Vessel Contents – The contents of the feed vessel may be heated up to 176 to 194 °F (80 to 90 °C) using internal steam sparge rings, which are submerged in the slurry. The slurry is heated during caustic leaching to increase the kinetics for aluminum dissolution reactions.	3.5.1.3, 3.5.1.7, 3.7.1.3, 3.12.1.3
B.5	Oxidative Leaching – Oxidative leaching is performed for waste streams containing relatively high chromium content. Oxidative leaching includes adding 1.0 M $NaMnO_4$ in a sequential manner after any caustic leaching to achieve a target molar manganese/chromium ratio.	3.4.1.2, 3.4.1.7
B.6	Caustic Leaching – With caustic and heat, obtain the target conversion and maintain aluminum in solution at the filtration temperature.	3.4.1.2, 3.4.1.7, 3.5.3.1

Reference	Functional Analysis Description	Requirement Section No.
B.7	Cool Waste – The vessel contents will typically be cooled with the vessel cooling jacket after caustic leaching; however, the UFP heat exchangers may also be used to cool the contents of feed vessels by recirculation. Jacket cooling is normally used to cool the vessel to the maximum pumping temperature or removing decay heat. The contents of the vessel will be cooled after caustic leaching or during receipt from UFP feed preparation vessels.	3.5.1.3, 3.11.1.3
B.8	Concentrate Solids – The system treats waste slurry by separating the undissolved solids fraction from the liquids, thereby producing concentrated slurry and permeate (filtrate). The UFP system separates the liquid fraction of waste from the solids fraction by cross-flow ultrafiltration.	3.4.1.5, 3.4.1.6, 3.4.1.7, 3.7.1.1, 3.7.1.3
B.9	Wash Concentrated Solids – Solids washing is performed to remove soluble species from the solids. If caustic leaching and/or oxidative leaching is performed, post washing is required after each of those sequences. Washing requires process condensate addition while the filtration loop is running. The slurry washes are collected in permeate collection vessels or acid/caustic effluent vessels PWD-VSL-00015/16.	3.4.1.3
B.10	Transfer HLW Concentrate Slurry – Slurry can be transferred from the ultrafiltration feed vessel to the HLW lag storage and feed blending vessels in the HLP system for production of (immobilized HLW) IHLW or to the treated concentrate vessel for feed to the LAW Vitrification Facility if the undissolved solids content and activity are sufficiently low. Alternatively, solids transferred to the HLW lag storage vessel may then be transferred back to the DOE.	3.4.1.1, 3.5.1.2
C.	**Ventilated UFP Vessels**	N/A
C.1	Ventilate UFP Vessels – Negative headspace pressure is maintained in the UFP vessels by the pretreatment vessel vent process (PVP) and process vessel vent exhaust (PVV) systems. The PVP system draws gases from the UFP vessel headspaces. The PVV fans react to a pressure reading at the entrance to the Caustic Scrubber to maintain pressure in the PVP header. It does not maintain "suction pressure of the UFP vessel.	3.5.2.2
C.2	Ventilate UFP Highpoints - The pretreatment vessel vent process (PVP) system provides venting of hydrogen at the highpoint of the UFP feed receipt vessel pump suction line, transfer lines drains, and process lines.	3.6.2.3
C.3	Ventilate UFP Vessel Pulse Jet Mixers (PJMs) - The pulse jet mixer ventilation (PJV) system provides venting for the PJMs' jet pump pairs discharged air for processing.	3.5.3.3, 3.8.2.2
C.4	Ventilate UFP breakpots - The pretreatment vessel vent process (PVP) system provides venting for the airbreak in UFP breakpots.	3.4.2.1
D.	**Process Permeate**	N/A
D.1	Receive Permeate – Liquid fraction (permeate) is routed, through the pulsepots to the UFP permeate vessels. The permeate removed from the ultrafiltration circuit is collected in the permeate collection vessels for transfer to the cesium ion exchange (CIX) feed vessel in the CXP system for further processing.	3.4.1.1, 3.5.1.2
D.2	Adjust Permeate Molarity– 19 M Caustic and Process Condensate is added to prevent precipitation due to the common ion effect (multiple salts share sodium as a cation, and therefore changes in sodium concentration affect solubility).	3.5.3.1

Reference	Functional Analysis Description	Requirement Section No.
D.3	Heat CXP Recycle Stream - The contents of permeate vessels may be heated up above the filtration temperature (above 113 °F) using an external steam-jet heater or heated recirculation from the CXP system. The waste stream is heated to mitigate precipitation of phosphate, oxalate and other solid species.	3.5.1.8
E.	**Sample Liquids**	N/A
E.1	Sample UFP Vessels – Sample the UFP vessels on a non-routine basis. Required reagent additions are based on pre-qualification testing and confirmatory sampling at the UFP hold-point sampling.	3.5.3.4
E1.1	Sample Feed Vessel – The concentrated solids may be sampled non-routinely to evaluate waste chemistry, waste composition or solids accumulation.	3.5.3.4
E.1.2	Sample Permeate – The permeate vessels each have sampling capability, which will be used to detect breakthrough of an ultrafilter and can be used as needed to confirm mass balances.	3.5.3.4
F.	**Clean System**	N/A
F.1	Clean and Flush/Wash System – Demineralized water is used to flush piping and vessels. Nitric acid and demineralized waster are used to clean and power flush the ultrafilter process loop.	3.5.1.4, 3.5.3.2, 3.6.2.2, 3.7.2.1, 3.7.3.1, 3.8.4.1, 3.12.4.1
F1.1	Ultrafilter Loop Power Flush – The primary means to control hydrogen accumulation is to use the "power flush" system, a sequence of pneumatically driven flushes and air purges to remove the waste stream from the ultrafiltration loop. The ultrafilter loop piping will have a caustic water flush (power flush) to remove slurry from the loop at a predetermined time after circulation in the loop has stopped. Loop contents are flushed into drain collection vessels. Air purges are used in the UFP loop only after a safety system actuated power flush. For normal operations, the final state of the UFP loop after a power flush is the loop is flooded with water.	3.6.2.2, 3.6.2.3, 3.7.2.1
F.1.2	Wash UFP Vessels – Each vessel has internal wash rings to aid in decontamination and the removal of deposition during normal operations. This wash ring is supplied fluid from an associated wash rack that normally provides either demineralized water or process condensate; however, a temporary connection exists on the rack where additional reagents may be supplied.	3.5.1.4, 3.5.3.2
F.1.3	Flush/Clean Ultrafilters – Ultrafilter cleaning is accomplished using back-pulsing, as well as circulating nitric acid and caustic through the ultrafiltration circuit. The ultrafilters may be back-pulsed with permeate, nitric acid, or caustic solution from pulse-pots, utilizing high-pressure air as the motive force. The second option is to clean the ultrafilter loop with weak or strong caustic solutions, and the third option is to clean with nitric acid or other cleaning agents. These methods may be used to restore the ultrafilter flux performance.	3.7.2.1, 3.7.3.1

Reference	Functional Analysis Description	Requirement Section No.
G.	**Support Monitoring, Control, and Communication Functions**	N/A
G.1	Non-safety Monitor & controls - The PCJ is provides the following non-safety functions: • Control waste transfers between UF vessels, UFP concentration process and piping flushes • Monitor vessel level, density, and temperature • Monitor breakpot temperature • Control operation of valves, pumps, sampling and cooling systems • Monitor device status (valve, pumps etc.) • Monitor reagents flow and pressure • Monitor sparge flows • Monitor cooling water flow • Monitor automatic flushing control status • Monitor steam flows and pressure for heating • Monitor automatic sparger and PJM air flow control status. The PCJ also provides startup initiation, status monitoring, and shutdown, initiation of independently-controlled services and utilities.	3.4.1.8, 3.12.1.2, 3.12.3.4, 3.12.3.5
G.2	**Safety Monitor & Control**	N/A
G.2.1	Level Detection Overflow Interlocks - The PPJ prevents accumulation of non-Newtonian fluids to Newtonian overflow vessels by shutting the discharge isolation valves on all non-Newtonian vessels except the vessel that experiences an overflow condition. The discharge isolation valve of the vessel experiencing the overflow condition remains open to enable lowering of the vessel level.	3.12.1.1, 3.12.2.1.2, 3.12.3.1, 3.12.3.2, 3.12.3.3,
G.2.2	Level Detection for Sparger Activation - Upon receiving high air flow rate sparging demands, the PPJ activates either the vessel lower air spargers when vessel level is at the low setpoint or all vessel spargers if the vessel level is above the low setpoint.	3.12.3.1, 3.12.3.2, 3.12.3.3, 3.12.2.1.1
G.2.3	PJM Overblow Interlocks - The PPJ prevents seismically induced multiple overblow events from occurring in non-Newtonian vessels by shutting down PJMs experiencing low backpressure.	3.12.3.1, 3.12.3.2, 3.12.3.3, 3.12.2.1.3
G.2.4	Pulse Pot Bulge Interlocks - The PPJ prevents the following in the pulse pot bulge: • Hot cell plant service air and reagent supply valves to an ultrafiltration pulse pot cannot be simultaneously opened. • Hot cell plant service air supply valves to an ultrafiltration pulse pot cannot be opened and shall be automatically closed on low plant service air pressure. • Hot cell reagent supply valves to an ultrafiltration pulse pot cannot be opened if the ultrafiltration pulse pot void valve is closed.	3.12.3.1, 3.12.3.2, 3.12.3.3, 3.12.2.2.1
G.2.5	No Simultaneous Opening of Drain and Suction Valves – The PPJ will prevent transfer line drain valve from being opened at the same time the transfer line or suction valves from the UFP vessels are open.	3.12.3.1, 3.12.3.2, 3.12.3.3, 3.12.2.2.2
G.2.6	Vent, Purge, and Flush Backflow Prevention – The PPJ prevents transfer line drain valves from being opened at the same time the transfer line or suction valves from the UFP vessels are open.	3.12.3.1, 3.12.3.2, 3.12.3.3, 3.12.2.2.3
G.2.7	UFP Feed Vessel Suction Line Purge – The PPJ will close the vent, purge, and flush utility isolation valves when UFP process pumps suction valves are open or pumps are running.	3.12.3.1, 3.12.3.2, 3.12.3.3, 3.12.2.2.4

Reference	Functional Analysis Description	Requirement Section No.
G.2.8	UFP Solids Transfer Pump Discharge Pressure Switch – The PPJ stops the solids transfer pump upon detection of high pressure on the UFP solids pump discharge.	3.12.2.2.5
G.2.9	Ultrafiltration Loop Power Flush Interlocks – The PPJ's control of the power flush system: • Actuates the power flush after a time delay following the loss of power. • A timer interlock will stop pumps based on runtime. • Discharge isolation valves on the power flush vessel are closed when low level in the vessel is detected. • Power flush vessel vent valves are closed on detection of low pressure in the vessel.	3.12.3.1, 3.12.3.2, 3.12.3.3, 3.12.2.2.6
H.	**Utilize External Utilities**	N/A
H.1	Supply Sparge Air to UFP Spargers - The sparger lines provide compressed air from the plant service air (PSA) system to support mixing of the UFP vessels and to prevent the buildup of hydrogen gas in the vessel headspace.	3.4.3, 3.8.2.2
H.2	Supply Air to Instruments Control Valves, and Utility Racks - Supply air to vessel Pulse Jet Mixers (PJMs) - Plant service air (PSA) system racks provide compressed air from the PSA system via jet pump pair ejectors to support mixing of the vessel slurry and to prevent the buildup of hydrogen gas in the vessel headspace.	3.4.3, 3.8.2.2
H.3	Supply air to vessel Pulse Jet Mixers (PJMs) - Plant service air (PSA) system racks provide compressed air from the PSA system via HLP jet pump pair ejectors to support mixing of the vessel slurry and to prevent the buildup of hydrogen gas in the vessel headspace.	3.4.3, 3.8.2.1
H.4	Receive Electrical Power - The low voltage electrical (480/208/120 V) system (LVE) provides electrical power to the UFP equipment.	3.4.3
I.	**Remote Handling**	N/A
I.1	Remove/replace hot cell equipment - The pretreatment in-cell handling (PIH) system provides mechanical handling for removal and replacement of UFP hot cell equipment (i.e. UFP pumps, ultrafilters, heat exchangers, jet pump pairs, jumpers, and inline components).	3.4.2.5, 3.13.2.1

2.2 System Classification

The UFP systems contain components with the following classifications/designations:

- ☒ Safety Class
- ☒ Safety Significant
- ☒ Dangerous Waste Permit affecting
- ☐ Air Permit affecting
- ☐ Waste Acceptance Impacting
- ☒ General

2.3 Basic Operational Overview

The UFP System covers the Ultrafiltration Circuit train A/B (5 filter units per train), Ultrafiltration Feed Preparation Vessels, Ultrafiltration Feed Vessels, the Ultrafiltration Permeate Collection Vessels, as well ancillary pumps, heat exchangers, and other equipment. The UFP system includes equipment, piping, valves, in-line components, and process instrumentation and controls needed to perform the following functions:

- Receive HLW feed from the HLP system
- Receive LAW feed from the FRP system
- Receive evaporator concentrate from the FEP system
- Blend HLW feed, LAW feed, evaporator concentrate and reagents for subsequent processing steps
- Heat ultrafiltration feed in preparation for caustic leaching and ultrafiltration
- Cool blended slurry following caustic leaching and in preparation for ultrafiltration
- Separate solids from the liquid fraction of the ultrafiltration feed using ultrafiltration
- Perform caustic leaching
- Perform oxidative leaching
- Transfer treated solids waste to the HLP and TCP system
- Transfer the liquid fraction to the CXP and PWD systems.

The UFP system can be divided into three major sub-systems:

- Ultrafiltration Feed Preparation Loops
- Ultrafiltration Feed Vessels and Ultrafiltration Circuits
- Ultrafiltration Permeate Collection

Ultrafiltration Feed Preparation Loops:

Each of the two independent Ultrafiltration Feed Preparation Loop sub-systems consists of one UFP feed preparation vessel and associated supporting ancillary equipment. This includes a transfer pump, cooling heat exchangers, primary and stand-by PJM) fluidics racks, shared bubbler, instrument, and wash racks, steam distribution racks for steam sparging; process jumpers, and other process and instrumentation components that support system operation.

Ultrafiltration Feed Vessels and Ultrafiltration Circuits:

Each train of the two independent Ultrafiltration Feed Vessels and Ultrafiltration Circuits sub-system consists of a UFP feed vessel, five ultrafilter units, and supporting ancillary equipment. This equipment includes pulse pots;

treated solids transfer pumps, ultrafiltration circuit feed pumps, ultrafiltration circuit cooling heat exchangers, primary and stand-by PJMs fluidics racks; air sparge racks; shared bubbler, wash, and instrument racks, a steam distribution rack for steam sparging; process jumpers, and other process and instrumentation components that form the complete system.

Ultrafiltration Permeate Collection:

The Ultrafiltration Permeate Collection sub-system consists of three permeate vessels and supporting ancillary equipment. This equipment incudes steam jet-heaters, PJMs and reverse-flow-diverter (RFD), fluidics racks, shared bubbler, wash, and instrument racks, a steam distribution header for steam heating; process jumpers, and other process and instrumentation components that form complete system.

3 Design Requirements

3.1 Requirements

Requirements are documented in Sections 3.4 through 3.13. Each requirement statement is accompanied by a basis discussion (as needed) and the expected means of verification. Requirements must be met in design. If a requirement stated in this document cannot be met in design, a revision to the requirement needs to be pursued, if possible, or the design must be changed to meet the requirement.

Requirements preceded by "**[HOLD]**" may only be used in support of preliminary or committed design, which shall also be issued with appropriate holds per procedure 24590-WTP-3DP-G04B-00046, *Engineering Drawings*. These requirements may not be used in support of fabrication or construction.
The following abbreviations are used to designate the selected method for verification (see 24590-WTP-GPG-ENG-0161, *Technical Requirements Management*, for additional guidance concerning methods of verification):

(I) Inspection
(A) Analysis
(D) Demonstration
(T) Test

The following abbreviations are used to designate the organization responsible for performing the verification:

(ENG) Engineering
(SU) Startup
(COM) Commissioning
(SUP) Supplier
(SUB) Subcontractor

3.2 Bases

Basis discussions are provided as needed to explain the decomposition or interpretation from the originating source requirement(s). Where a **[HOLD]** has been applied to a requirement, this section will include the basis for the "HOLD".

3.3 References

The requirements include a source document reference and a DOORS® Unique Identification Numbers (hereafter referred to as Identification Numbers or IDs). Each unique source document reference, with ID number(s), is bracketed separately. Requirements may include a reference to the Section 2.1, Functional Description, listed in parentheses following the source document and ID number references. A complete listing of all source references is provided in Section 5.

A complete listing of all source references is provided in Section 5.1.

3.4 General Requirements

3.4.1 Mission and Functional/Performance Requirements

3.4.1.1 UFP System Vessel Transfer Rates

Requirement: Ultrafiltration system shall be designed to support the treatment capacities identified in Table 3-1. [Section C.7(b)(1), DOE-BNI Contract, [ID : DE-AC27-01RV14136 Section C ID#1156]](A.1, A.9, B.1, B.10, D.1)

Table 3-1 Pretreatment Facility Design Capacity

Facility	Design Capacity	Treatment Capacity
LAW Pretreatment[1]	3740 MT Na per year	2620MT Na per year
HLW Pretreatment[2]	1225 MT as delivered solids per year	860 MT as delivered solids per year

1. The LAW waste treatment capacity is based on waste sodium (Na). Waste Na is defined as Na from the following sources: Na from the LAW feed Envelopes in accordance with Specification 7, *Low Activity Waste Envelopes Definition* (DOE-BNI Contract) and soluble NA from the HLW Envelope in accordance with Specification 8, *High Level Waste Envelope Definition* (DOE-BNI Contract). In addition the reagent Na added to wash and leach the solids defined in the sludge treatment flowsheet, approve in the DOE (Table C.50-1.1, Deliverable 2.1) and any NA required to maintain chemical stability of the Ultrafilter system permeate is included in the definition of waste NA.
2. As delivered solids represents the mass of the solid cations and anions delivered in the waste feed batches provided by the TFCOUP Revision 6.0 Feed Vector.
3. Confirmation that the WTP design will achieve the listed design capacities is contained in document 24590-WTP-MRR-PET-08-002, Revision 2, WTP Contract Run – (G2) Dynamic Model Run Results, August 25, 2008.

Basis Discussion: High level and low level waste are received from the PTF FRP and FEP systems. Software models were used to validate the design throughput capacity is met by the UFP, inclusive of treatment processes, individual system and component capabilities, and equipment reliability and maintainability inputs. The throughput rates are a function of the feed characteristics in a given batch volume. Batch volume and nominal transfer rate are used as inputs in the overall throughput analysis to ensure UFP system operations are designed for a 60-day feed forward capability to achieve a 6 metric tons of HLW glass (MTG)/day and to support the 100 % capacity HLW melter throughput for glass production of 7.5 MTG/day, as stipulated in the WTP Contract. The design throughput (processing) capabilities for the UFP system modeling results are in Section 6.3.1 of the BOD.

Verification: Verification is expected to be achieved through the following:

Verif. Method	Verif. By	Plan	Notes/Comments
T	SU/COM	Perform an integrated system test to verify the design batch capacities and transfer rate of the system.	*This may be verified in the Cold Commissioning capacity testing performed per DOE/BNI Contract section C.6(e)(3)(ii).*

3.4.1.2 Caustic and Oxidative Leaching Capabilities

Requirement: [HOLD] The UFP system shall be designed with the capability to perform caustic and oxidative leaching for removal of aluminum and chromium from the feed to HLW vitrification facility so that the HLW glass waste oxide loading is not limited by aluminum or chromium. [Section 6.1.1, BOD, [ID : DB-ENG-01-001 ID#10303] [ID : DB-ENG-01-001 ID#10303]][Section C.7(b)(7)(viii), and C.7(d)(1)(vii), DOE-BNI Contract, [ID : DE-AC27-01RV14136 Section C ID#1196]][Section 6, and 6.1.1, BOD, [ID : DB-ENG-01-001 ID#10279] [ID : DB-ENG-01-001 ID#10294] [ID : DB-ENG-01-001 ID#10299]](A.2, A.5, B.5, B.6)

Basis Discussion: Leaching can be performed in two locations in the UFP System:

- Ultrafilter Feed Preparation Vessels
- Ultrafilter Feed Vessels

The leaching processes are not absolute requirements, but will be balanced as described in Specification 12 of the DOE-BNI Contract, with other operational parameters.

This requirement is on HOLD due to the SHSVD for the UFP vessels will remove the caustic leaching capabilities for the ultrafilter feed preparation vessels. [24590-WTP-ATS-MGT-15-0389]

Verification: Verification is expected to be achieved through the following:

Verif. Method	Verif. By	Plan	Notes/Comments
I	ENG	Review the design to verify the UFP system has the capabilities for caustic leaching in the feed preparation vessels.	
I	ENG	Review the design to verify the UFP system has the capabilities for caustic and oxidative leaching in the feed vessels.	
D	SU/COM	Demonstrate through the addition of reagents caustic and oxidative leaching can be accomplished in UFP vessels	

3.4.1.3 Washing of Solids

Requirement: [HOLD] The UFP system shall have the capability to wash sludges/solids to reduce the free hydroxide concentration below 0.25 molar. [Section 6 and 6.1.1, BOD, [ID : DB-ENG-01-001 ID#10279] [ID : DB-ENG-01-001 ID#10299]](A.2, B.8)

Basis Discussion: This lower hydroxide will keep plutonium in a solid form. The amount of plutonium being dissolved in solution during oxidative leaching is estimated to be less than 1% of that which is present in the incoming WTP feed.

This requirement is on "HOLD" due to potential changes resulting from the pretreatment flowsheet processing alternatives for leaching and resolutions of criticality technical issues the oxidative leaching and washing of solids functions would be eliminated. [24590-WTP-ATS-MGT-15-0425]

Verification: Verification is expected to be achieved through the following:

Verif. Method	Verif. By	Plan	Notes/Comments
I	ENG	Review the design to verify the system has the capability to rinse solids.	
D	SU/COM	Demonstrate the system adds reagents to perform washing of solids in the UFP vessels.	

3.4.1.4 Precipitation of ^{90}Sr and TRU

Requirement: The UFP will have the capability to precipitate ^{90}Sr and TRU to facilitate separation by ultrafiltration. [Sections 4.1.8, and 4.1.8.1, ILAW Product Compliance Plan, [ID : WTP-PL-RT-03-001 ID#10381] [ID : WTP-PL-RT-03-001 ID#10383]][Section C.7(d)(1)(i)&(ii), DOE-BNI Contract, [ID : DE-AC27-01RV14136 Section C ID#1036] [ID : DE-AC27-01RV14136 Section C ID#1188]][Section 6, BOD, [ID : DB-ENG-01-001 ID#10280]](A.2, A.6, B.2)

Basis Discussion: Precipitation of ^{90}Sr and TRU (primarily americium) from complexant concentrate is achieved by the addition of non-radioactive strontium nitrate followed by the addition of sodium permanganate. The technology for the removal of ^{90}Sr is an isotopic dilution process that uses non-radioactive Sr as the reagent. The removal of TRU is accomplished using sodium permanganate for de-complexation and adsorption of the TRU elements. These removals allow for the production of an (immobilized LAW) ILAW waste product that meets Specification 2.2.2.8, *Radionuclide Concentration Limitations*.

Verification: Verification is expected to be achieved through the following:

Verif. Method	Verif. By	Plan	Notes/Comments
I	ENG	Review the design to verify the UFP system has the capabilities to precipitate ^{90}SR and TRU through the additions of Strontium nitrate and sodium permanganate.	
D	SU/COM	Demonstrate the system adds reagents to perform precipitation of solids in the UFP vessels.	

3.4.1.5 Ultrafiltration

Requirement: The UFP System shall be designed with the capability to separate solids from the supernatant. [Section C.7(d)(1)(i), DOE-BNI Contract, [ID : DE-AC27-01RV14136 Section C ID#1036]][Section 6, and 6.1.1, BOD, [ID : DB-ENG-01-001 ID#10279] [ID : DB-ENG-01-001 ID#10280] [ID : DB-ENG-01-001 ID#10294] [ID : DB-ENG-01-001 ID#10299] [ID : DB-ENG-01-001 ID#10302] [ID : DB-ENG-01-001 ID#10303]](B.7)

Basis Discussion: The filtration process takes several steps to accomplish. These steps may include initial concentration, caustic leaching, rinsing (rinsing is defined as the dilution of the remaining supernatant to a low concentration by removing as many dissolved constituents as possible), oxidative leaching, and final rinsing followed by solids concentration adjustment. The design assumes the cycle will take up to 12 days, however the actual cycle is determined for each batch. There are two trains to perform the task. The trains are designed to operate independently. This step is always performed, but the end point concentration is determined on a batch to batch basis.

Verification: Verification is expected to be achieved through the following:

Verif. Method	Verif. By	Plan	Notes/Comments
I	ENG	Review the design to verify the ultrafilter system has the capabilities to separate solids from the supernatant using ultrafiltration.	
D	SU/COM	Demonstration, through the use of simulants, the ultrafiltration systems capability to concentrate solids.	

3.4.1.6 Ultrafilter Flow Rate

Requirement: The ultrafilters and ultrafilter loop components shall be designed to achieve the required solids concentration at a nominal flow rate to support the treatment capacities identified in Table 3-1. [Section 6.1.1, BOD, [ID : DB-ENG-01-001 ID#10299] [ID : DB-ENG-01-001 ID#10336]](B.7)

Basis Discussion: A flowrate in the ultrafilter recirculation loop of 2200 gpm is intended to provide sufficient axial velocity to ensure scouring of the filter cake that forms during processing to maintain permeability. This flowrate is a function of tube size.

Verification: Verification is expected to be achieved through the following:

Verif. Method	Verif. By	Plan	Notes/Comments
A	ENG	Perform an analysis to determine the sizing of piping, pumps and valves to accommodate the requirement.	
I	ENG	Review the design to verify ultrafilters and loop components conform to the analysis.	
T	SU/COM	Perform a test to verify the system meets the established nominal flow rate.	

3.4.1.7 Two Filtration Trains

Requirement: The UFP system shall have two batch process ultrafiltration trains with the capability of operating independently for the purpose of precipitation, caustic and oxidative leaching, and separation of solids from the supernatant. [Section C.7(b)(7)(i), C.7(b)(7)(v), C.7(d)(1)(i), C.7(d)(1)(vii), DOE-BNI Contract, [ID : DE-AC27-01RV14136 Section C ID#1259] [ID : DE-AC27-01RV14136 Section C ID#1263] [ID : DE-AC27-01RV14136 Section C ID#1036] [ID : DE-AC27-01RV14136 Section C ID#1196]][Section 11.13.1, ORD, [ID: WTP-RPT-OP-01-001 ID#1353]](B.5, B.6, B.7)

Basis Discussion: The filtration trains will have the capability to work independently or together to facilitate maximizing availability and through-put.

Verification: Verification is expected to be achieved through the following:

Verif. Method	Verif. By	Plan	Notes/Comments
I	ENG	Review the design to verify there are two ultrafiltration trains capable of being operated independently.	

3.4.1.8 Process Control for Conditioning of Waste

Requirement: [HOLD] For the UFP feed vessels, shall be controlled by its associated instrumentation, monitoring and control equipment to condition the slurry viscosity and shear strength for leached, washed, and concentrated waste to be within the range of 6 cP and 6 Pa to 30 cP and 30 Pa as the lower and upper bounds, respectively. [Section 6, BOD, [ID : DB-ENG-01-001 ID#10279]](G.1)

Basis Discussion: The mechanical-system design envelope is a rheology with a consistency of 30 cP (30 mPa·s) and a yield stress of 30 Pa. The post-leaching, -washing, and -concentration non-Newtonian slurry solids are ≤300 microns and ≤3.8 g/ml bulk average density, and a maximum plutonium oxide particle of 10 microns. A Bingham-plastic-model fluid with these properties is expected to envelope the rheology of the waste during all phases of processing in the system. This is the basis for selection of the processing equipment, (i.e. pumps, piping, heat exchangers etc.). Verification is also supported by the demonstrations and testing in sections 3.4.1.1, 3.4.1.2, 3.4.1.3, 3.4.1.4, and 3.4.1.5.

This requirement is on "HOLD" due to the 6 cP and 6 Pa minimum rheology (a mixing requirement) is under review by the mixing technology technical team (T4) and may be removed pending the technical team results. [24590-WTP-ATS-MGT-15-0388]

Verification: Verification is expected to be achieved through the following:

Verif. Method	Verif. By	Plan	Notes/Comments
A	ENG	Perform an analysis of the process to determine the necessary Instrumentation and controls equipment and components to meet the conditions of the requirement.	
I	ENG	Review the design to verify the needed components are included in the design.	

3.4.1.9 Minimum Design Life

Requirement: Except as noted in the table below, non-replaceable, permanent UFP system plant equipment listed in Table 3-2 shall be designed for a minimum design life of 40 years, inclusive of maintenance. All non-maintainable items of UFP system equipment shall be designed to last the life of the facility (40 years). Design life of equipment shall consider the effects of chemical, radiological and thermal exposure. [Section C.7(a)(1), DOE-BNI Contract, [ID : DE-AC27-01RV14136 Section C ID#1243]][Sections 11.1.1, 11.4.1, 11.4.4, 11.7.4, 11.8.3, 14.10.1, 14.10.1.3, 16.4.1.1, BOD, [ID : DB-ENG-01-001 ID#11367] [ID : DB-ENG-01-001 ID#11439] [ID : DB-ENG-01-001 ID#11528] [ID : DB-ENG-01-001 ID#11430] [ID : DB-ENG-01-001 ID#11545] [ID : DB-ENG-01-001 ID#11419] [ID : DB-ENG-01-001 ID#11529] [ID : DB-ENG-01-001 ID#11534] [ID : DB-ENG-01-001 ID#12740]][Safety Criterion 4.4-1, Appendix H - Sections 3.8, and 4.0, SRD, [ID : SRD-ESH-01-001-02 ID#53] [ID : SRD-ESH-01-001-02 ID#955] [ID : SRD-ESH-01-001-02 ID#977] [ID : SRD-ESH-01-001-02 ID#977]][Sections 5.2, 9.1, 14.1, 14.2, 14.8, and 20.0, ORD, [ID : WTP-RPT-OP-

01-001 ID#1172] [ID : WTP-RPT-OP-01-001 ID#1463] [ID : WTP-RPT-OP-01-001 ID#1465] [ID : WTP-RPT-OP-01-001 ID#1474] [ID : WTP-RPT-OP-01-001 ID#1522] [ID : WTP-RPT-OP-01-001 ID#1726]]

Table 3-2 UFP System Equipment Components Design Life

Equipment/Component Description	Design Life (Years)
UFP Vessels and internal components	40
PJMs and Spargers	40
Sample/Transfer and process circulation pumps	>5 (Target design life is 5)
Welded Piping (including hard-to-reach)	40
Jumpers (Mechanical, Instrument Air, and Electrical)	Target design life >5*
Inline components (valves, instruments)	Target design life >5*

* The use of a design life <5 years must be documented and justified on the basis of not having an adverse impact on overall plant availability.

Basis Discussion: Equipment and material selection is based on proven performance, value engineering principles, and fit-for-function principles. The selection of equipment and materials is further addressed in detail as the design progresses. In-cell/in-cave equipment design considers the routine environmental exposures under normal operations for non-safety equipment; safety and (post-accident monitoring) PAM equipment also considers abnormal and emergency exposures – this minimizes the need for equipment maintenance, exposure and radiological waste generation in radiological areas. [ALARA]
References for Design Life <40 years:

- Sample/Transfer Pumps - Section 3.3.1 of 24590-PTF-3PS-MPC0-T0003, *Engineering Specification for Centrifugal Slurry Pumps to Meet Requirements of Pretreatment Facility Hot Cell*
- Jumpers (Mechanical, Instrument Air, and Electrical Jumpers) - Reliability to minimize impacts to plant availability
- Inline components (valves, instruments) - Reliability to minimize impacts to plant availability

[ALARA]

Verification: Verification is expected to be achieved through the following:

Verif. Method	Verif. By	Plan	Notes/Comments
I	ENG	The "qualified" design life for safety SSCs is to be verified through equipment environmental qualification documentation that may be accomplished through analysis or testing.	*Document verification in equipment qualification package (EQP).*
I	ENG	Verify the supplier certificate of conformance versus design life requirement established in the material requisition (specification or datasheet) for non-safety SSCs.	

3.4.1.10 Materials of Construction and Erosion/Corrosion Design Parameters

Requirement: The UFP system equipment and components shall be designed to include allowances for erosion/corrosion and use materials of construction, including wear-resistant coatings in accordance with: [Safety Criterion 4.2-3, Appendix H Section 4.0, SRD, [ID : SRD-ESH-01-001-02 ID#42]][Sections 6.1, 11.4.1, 11.7.4,

11.8.3.1, 15.3.1, 16.4.1.4, 16.4.2.8, and 16.4.8, BOD, [ID : DB-ENG-01-001 ID#12695] [ID : DB-ENG-01-001 ID#10291] [ID : DB-ENG-01-001 ID#12784] [ID : DB-ENG-01-001 ID#12785] [ID : DB-ENG-01-001 ID#12861] [ID : DB-ENG-01-001 ID#11419] [ID : DB-ENG-01-001 ID#11427] [ID : DB-ENG-01-001 ID#11528]][Section 4.3.4.4, 4.3.5.5, 4.3.29.4, 4.4.30.3, 4.4.35.4, and 4.4.9.5, PDSA - PT Facility, [ID : WTP-PSAR-ESH-01-002-02 ID#14007] [ID : WTP-PSAR-ESH-01-002-02 ID#14032] [ID : WTP-PSAR-ESH-01-002-02 ID#14247] [ID : WTP-PSAR-ESH-01-002-02 ID#14595] [ID : WTP-PSAR-ESH-01-002-02 ID#14667] [ID : WTP-PSAR-ESH-01-002-02 ID#14343]]

Basis Discussion: The allowance for erosion/corrosion and applicable materials of construction are limited to those components that come into contact with the process fluids and that are required to maintain confinement/containment of those process fluids. Materials of construction that can withstand the erosive/corrosive waste effluents and chemicals are selected. The materials for the PT facility UFP system equipment and components are selected based on the stream data presented in the process corrosion data sheet report. If vessel flushing or washing via internal spray mechanisms is needed to prevent or minimize corrosion, the operational limitations are identified in the vessel corrosion evaluation. Refer to Appendix A, Tables A-3, A-4, A-13, A-14, A-15, and A-31; 24590-WTP-DB-PET-09-001, *Process Inputs Basis of Design* (PIBOD); and 24590-WTP-M4C-V11T-00024, *WTP Process Flowsheet Mass & Energy Balance Analysis for Input to Material Selection Assessments,* for the fluid characteristics of the process streams.

The UFP system streams are accounted for in the erosion and corrosion analyses and are fabricated with materials of construction that can withstand the radioactive, thermal, and erosive/corrosive environment caused by the material. Design and verification is expected to be to the most recent issued revisions of the listed corrosion evaluations. If vessel washing via internal spray mechanisms is needed to prevent or minimize corrosion, the operational limitations are identified in the vessel corrosion evaluation.

Details of the allowed materials corrosion allowances can be found in:

- 24590-PTF-N1D-UFP-00001, *UFP-BRKPT-00001A/B (PTF) – Ultrafiltration Recycle Breakpot*
- 24590-PTF-N1D-UFP-00002, *UFP-PP-00001,2,3A/B (PTF) – Ultrafiltration Pulsepots*
- 24590-PTF-N1D-UFP-00003, *UFP-VSL-00002A/B (PTF) – Ultrafiltration Feed Vessels*
- 24590-PTF-N1D-UFP-00004, *UFP-FILT-00001,2,3A/B (PTF) - Ultrafilter*
- 24590-PTF-N1D-UFP-00005, *UFP VSL-00001A/B (PTF) – Ultrafiltration Feed Preparation Vessel*
- 24590-PTF-N1D-UFP-00007, *UFP-PMP-00042A/B (PTF) – Ultrafiltration Recirculation Pumps*
- 24590-PTF-N1D-UFP-00008, *UFP VSL-00062A/B/C (PTF) – Ultrafilter Permeate Collection Vessel*
- 24590-PTF-N1D-UFP-00009, *UFP-HX-00001A/B (PTF) – UFP Slurry Cooler*
- 24590-PTF-N1D-UFP-00010, *UFP-HX-00041A/B (PTF) – UFP Upfront Cooler Heat Exchanger*

Verification: Verification is expected to be achieved through the following:

Verif. Method	Verif. By	Plan	Notes/Comments
A/I	**ENG**	Perform an analysis/inspection of materials used in the PT facility UFP system which are in contact with, and are required to maintain confinement or containment of, the process fluids to verify that they are acceptable for use in the operating environment and have adequate erosion and corrosion allowances.	

Verif. Method	Verif. By	Plan	Notes/Comments
I	ENG	Review components used in the PTF UFP system, which are in contact with, and are required to maintain confinement or containment of, the process fluids for concurrence with the analysis.	

3.4.1.11 Room Environmental Conditions for Safety SSCs

Requirement: The safety equipment in the PTF Facility UFP system credited with any safety function(s) and post-accident monitoring instruments shall be designed and qualified to perform their safety function(s) as intended in the environmental conditions associated with the events for which they are intended to respond, inclusive of aging effects, throughout their qualified life. [Safety Criterion 4.4-1, and 4.3-4, SRD, [ID : SRD-ESH-01-001-02 ID#53] [ID : SRD-ESH-01-001-02 ID#47]][Sections 4.3.4.3, and 4.4.30.3, PDSA – PT Facility, [ID : WTP-PSAR-ESH-01-002-02 ID#13990] [ID : WTP-PSAR-ESH-01-002-02 ID#14595]][Section 11.7.3, BOD, [ID : DB-ENG-01-001 ID#11524] [ID : DB-ENG-01-001 ID#13215] [ID : DB-ENG-01-001 ID#11526]]

Basis Discussion: Safety SSCs designated as Safety Class (SC) and Safety Significant (SS) are designed and qualified to perform their safety function as intended in the room environment conditions associated with the events for which they are intended to respond. The effects of aging on normal and abnormal functioning are considered in design and qualification.

Verification: Verification is expected to be achieved through the following:

Verif. Method	Verif. By	Plan	Notes/Comments
A/T	ENG	Perform analysis or testing to verify the ability of the SSCs credited with a safety function to withstand the specified environmental conditions for the rooms in which the components are installed.	*Document in EQP. See PTF Room Environment Data Sheet (24590-PTF-U0D-W16T-00001) for room environmental conditions.*
I	ENG	Review the design to verify conformance to the as-tested or as-analyzed configuration.	*Document in an evaluation/assessment report or EQP.*

3.4.1.12 Room Environment Conditions for Non-Safety SSCs

Requirement: Non-safety equipment/components shall be designed to operate and withstand the service conditions per Table 12-1 in the BOD. [Table 12-1, BOD, [ID : DB-ENG-01-001 ID#13176] [ID : DB-ENG-01-001 ID#13180]][Sections 11.16, 16.1, ORD [ID : WTP-RPT-OP-01-001 ID#1373] [ID : WTP-RPT-OP-01-001 ID#1606]]

Basis Discussion: Non-safety SSCs are designed to function as intended in the room environment conditions associated with their location.

Verification: Verification is expected to be achieved through the following:

Verif. Method	Verif. By	Plan	Notes/Comments
I	ENG	Review of design of non-safety, active SSCs to verify compliance with BOD Table 12-1 conditions.	*Documented in an assessment/evaluation report.*

3.4.1.13 UFP System Deactivation, Decontamination, and Decommissioning Design

Requirement: UFP equipment shall be designed to minimize the potential for radioactive contamination and include features to facilitate the decontamination process without reduction of functionality through degradation of the electrical, mechanical, or any other components involved. [Section C.7(a)(11), DOE-BNI Contract, [ID : DE-AC27-01RV14136 Section C ID#1253]][Sections 5.2, 9.1, 14.1, 14.16, and 20.0, ORD, [ID : RPT-OP-01-001 ID#1717] [ID : RPT-OP-01-001 ID#1718] [ID : RPT-OP-01-001 ID#1719] [ID : RPT-OP-01-001 ID#1720] [ID : RPT-OP-01-001 ID#1721] [ID : RPT-OP-01-001 ID#1171] [ID : RPT-OP-01-001 ID#1047] [ID : RPT-OP-01-001 ID#1723] [ID : RPT-OP-01-001 ID#1557] [ID : RPT-OP-01-001 ID#1467]][Sections 5.1.2, BOD, [ID : DB-ENG-01-001 ID#10259]]

Basis Discussion: Designs can include piping and valve systems with the capability to add decontamination chemicals, facilities to change-out and decontaminate equipment, and built-in decontamination features such as spray rings. [ALARA]

Verification: Verification is expected to be achieved through the following:

Verif. Method	Verif. By	Plan	Notes/Comments
I	ENG	Review design to verify features and functionality for compliance to non-degradation of equipment subject to the decontamination process.	*Document in an evaluation/assessment report. Radiological Engineering to participate.*

3.4.2 Nuclear Safety, ALARA, Environmental, and Other Regulatory Requirements

3.4.2.1 Safety Designations

Requirement: [HOLD] The UFP system SSCs shall be designated as safety SSCs in accordance with Table 3-3 below: [Sections 4.3.4, 4.3.4.1, 4.3.4.2, 4.3.4.3, 4.3.4.3.1, 4.3.4.3.2, 4.3.4.3.3, 4.3.4.4, 4.3.4.5, 4.3.5.1, 4.3.5.3, 4.3.29, 4.3.29.1, 4.3.29.5, 4.4.6.5, 4.4.9.1, 4.4.9.3, 4.4.15.1, 4.4.15.2, 4.4.15.3, 4.4.21.1, 4.4.21.3, 4.4.21.5, 4.4.30.1, 4.4.30.3, 4.4.30.5, 4.4.35.1, 4.4.35.3, 4.4.35.5, 4.4.36.1, 4.4.39, 4.4.39.1, 4.4.39.3, 4.4.41.1, 4.4.42.2, Table 4A-1, Table 4A-2, and Table 4A-4, PDSA – PT Facility, [ID : WTP-PSAR-ESH-01-002-02 ID#16269] [ID : WTP-PSAR-ESH-01-002-02 ID#13977] [ID : WTP-PSAR-ESH-01-002-02 ID#13979] [ID : WTP-PSAR-ESH-01-002-02 ID#13980] [ID : WTP-PSAR-ESH-01-002-02 ID#13982] [ID : WTP-PSAR-ESH-01-002-02 ID#13983] [ID : WTP-PSAR-ESH-01-002-02 ID#13984] [ID : WTP-PSAR-ESH-01-002-02 ID#13986] [ID : WTP-PSAR-ESH-01-002-02 ID#13987] [ID : WTP-PSAR-ESH-01-002-02 ID#13985] [ID : WTP-PSAR-ESH-01-002-02 ID#13990] [ID : WTP-PSAR-ESH-01-002-02 ID#13993] [ID : WTP-PSAR-ESH-01-002-02 ID#13998] [ID : WTP-PSAR-ESH-01-002-02 ID#14001] [ID : WTP-PSAR-ESH-01-002-02 ID#14002] [ID : WTP-PSAR-ESH-01-002-02 ID#14003] [ID : WTP-PSAR-ESH-01-002-02 ID#14004] [ID :

WTP-PSAR-ESH-01-002-02 ID#14007] [ID : WTP-PSAR-ESH-01-002-02 ID#14009] [ID : WTP-PSAR-ESH-01-002-02 ID#14011] [ID : WTP-PSAR-ESH-01-002-02 ID#14019] [ID : WTP-PSAR-ESH-01-002-02 ID#14023] [ID : WTP-PSAR-ESH-01-002-02 ID#14239] [ID : WTP-PSAR-ESH-01-002-02 ID#14240] [ID : WTP-PSAR-ESH-01-002-02 ID#14251] [ID : WTP-PSAR-ESH-01-002-02 ID#14313] [ID : WTP-PSAR-ESH-01-002-02 ID#14320] [ID : WTP-PSAR-ESH-01-002-02 ID#14324] [ID : PFT-RPT-ESH-02-001 ID#12168] [ID : WTP-PSAR-ESH-01-002-02 ID#14325] [ID : WTP-PSAR-ESH-01-002-02 ID#14371] [ID : WTP-PSAR-ESH-01-002-02 ID#14373] [ID : WTP-PSAR-ESH-01-002-02 ID#14375] [ID : WTP-PSAR-ESH-01-002-02 ID#14457] [ID : WTP-PSAR-ESH-01-002-02 ID#14463] [ID : WTP-PSAR-ESH-01-002-02 ID#14464] [ID : WTP-PSAR-ESH-01-002-02 ID#14469] [ID : WTP-PSAR-ESH-01-002-02 ID#14591] [ID : WTP-PSAR-ESH-01-002-02 ID#14595] [ID : WTP-PSAR-ESH-01-002-02 ID#14596] [ID : WTP-PSAR-ESH-01-002-02 ID#14665] [ID : WTP-PSAR-ESH-01-002-02 ID#14601] [ID : WTP-PSAR-ESH-01-002-02 ID#14657] [ID : WTP-PSAR-ESH-01-002-02 ID#14671] [ID : WTP-PSAR-ESH-01-002-02 ID#14679] [ID : WTP-PSAR-ESH-01-002-02 ID#14727] [ID : WTP-PSAR-ESH-01-002-02 ID#14729] [ID : WTP-PSAR-ESH-01-002-02 ID#14733] [ID : WTP-PSAR-ESH-01-002-02 ID#14757] [ID : WTP-PSAR-ESH-01-002-02 ID#14781] [ID : WTP-PSAR-ESH-01-002-02 ID#16407] [ID : WTP-PSAR-ESH-01-002-02 ID#16417] [ID : WTP-PSAR-ESH-01-002-02 ID#14801] [ID : WTP-PSAR-ESH-01-002-02 ID#16439] [ID : WTP-PSAR-ESH-01-002-02 ID#16471] [ID : WTP-PSAR-ESH-01-002-02 ID#16453] [ID : WTP-PSAR-ESH-01-002-02 ID#16472] [ID : WTP-PSAR-ESH-01-002-02 ID#16445] [ID : WTP-PSAR-ESH-01-002-02 ID#16424] [ID : WTP-PSAR-ESH-01-002-02 ID#16524] [ID : WTP-PSAR-ESH-01-002-02 ID#16523] [ID : WTP-PSAR-ESH-01-002-02 ID#16460]]

Table 3-3 UFP Safety Designations

SSC/Equipment/Component Description	Safety Designation	Safety Function	References (PDSA_
Hydrogen Mitigation Purge and Mixing SSC's, UFP Vessels:			
• Air supply piping, including isolation and check valves (purge system) • Vent process system (PVP) piping, vessel connections and collection headers (purge system) • PJMs, air supplying pining, racks and controls (mixing) • Pulse jet ventilation (PJV) header • Vessel level detectors (bubblers) and level detector flush • Vessel level detector flush water supply • Air spargers and supports • Anti-foam and caustic addition provisions	SC	The credited safety is to prevent hydrogen buildup in process vessels and other equipment to levels in excess of the (lower flammable limit) LFL during accident conditions.	Sections 4.3.4, 4.3.4.1, 4.3.4.2, 4.3.4.3, 4.3.4.3.2, 4.3.4.3.3, 4.3.4.4, 4.3.4.5, 4.3.29, 4.3.29.1, 4.4.34, 4.4.35, 4.3.35.1, Table 4A-1, Table 4A-2, Table 4A-4, PDSA – PT Facility

SSC/Equipment/Component Description	Safety Designation	Safety Function	References (PDSA_
• HPAV vent and flush valve interlocks • Stable and secure surfaces to support the SC hydrogen mitigation functions			
SC Waste Transfer/Process Piping, and Process Vessel Isolation Valves			
• Process vessel isolation valves and interlocks • Vessel piping out to and including the hotcell suction isolation valves.	SC	The credited safety function is to allow operator initiated primary confinement of radioactive process liquids, the release of which could result in radioactive dose in excess of RES for anticipated events.	Sections 4.3.5, Tables 4A-2 and 4A-4, PDSA – PT Facility
Controls, Hydrogen in Piping and Ancillary Vessels			
UFP Filtration Loop • Isolation valves on permeate side of the ultrafilters and subsequent downstream valves • Redundant air purge on the black cell portion with redundant isolation valves.	SC	Purge and vent SSCs remain connected to the associated piping or ancillary vessel during all DBEs and to provide purge, vent, or flushing capability when required to prevent hydrogen accumulation.	Section 4.3.29, Tables 4A-3 and 4A-4, PDSA, PT Facility
Non-Newtonian Transfer Line Flush System			
• DIW water supply piping, valves, jumpers and other inline components for the line flush system • Flush system piping support components, including anchorage and concrete embeds	SC	Remove waste from the non-Newtonian transfer lines such that the potential for accumulations of detonable quantities of hydrogen gas are prevented.	Section 4.3.30, PDSA, PT Facility
UFP Heat Exchangers			
• Boundary between process liquids and CHW	SS	Provide primary confinement of radioactive waste; their release into cooling water or steam systems could result in radiation dose to facility workers in excess of the RES from Table 2-1 of the SRD for anticipated events.	Sections 4.4.15.1, 4.4.15.2, 4.4.15.3, Table 4A-2, PDSA – PT Facility
Vessel Overflow Piping			

SSC/Equipment/Component Description	Safety Designation	Safety Function	References (PDSA_
• Vessel overflow piping for SS process streams • Sealpots piping, supports and embedment's	SS	Provide confined pathway for the maximum expected vessel overflow to the ultimate overflow vessels to minimize aerosol generation.	Section 4.4.6.3, 4.4.6.4, 4.4.6.5, PDSA – PT Facility
UFP Reagent Bulges			
• Utility supply isolation valves and associated interlocks	SS	Prevent backflow of radioactive waste from the ultrafiltration pulse pots into or beyond the bulges in to the C3areas.	Sections 4.4.21, PDSA – PT Facility
Non-Newtonian Waste Transfer Line Drain Valves and Interlocks			
• Transfer line drain valve and associated interlocks that limit the probability that non-Newtonian waste being transferred into the PWD vessels.	SS	Prevents misrouting of non-Newtonian waste feed from the Ultrafiltration Feed Vessels into either the Ultimate Overflow Vessel or the HLW Effluent Transfer Vessel.	Section 4.4.30, PDSA PT Facility
Control of Hydrogen in Piping and Ancillary Vessels (HPAV)			
• PJM and RFD charge vessel venting	SS	Periodically remove hydrogen from PJM and charge vessel head spaces	Section 4.4.35, Tables 4A-3 and 4A-4 PDSA – PT Facility
• Newtonian pump suction and discharge high point vents		Limits potential accumulation of hydrogen in dead legs to less than BOC	
• Non-Newtonian pump suction and discharge lines purge and water flush system		Limits potential accumulation of hydrogen in dead legs to less than BOC	
• UFP filtration loop purge/flush system and isolation valves		Protects the vessel internals that provide the SS mixing functions from explosions in the suction line	
• Permeate vessels PJM and RFD charge vessels		Prevent hydrogen accumulation	
Vent, Purge, and Flush Backflow Prevention for HPAV Controls			
• Isolation valve interlocks to the process systems pumps	SS	Interlocks are required to protect facility workers from HPAV controls malfunctions by preventing backflow of process streams into C3 areas.	Section 4.4.36, PDSA – PT Facility
UFP Feed Pump Discharge Pressure Switches			

SSC/Equipment/Component Description	Safety Designation	Safety Function	References (PDSA_
• UFP Feed Pumps, controls and instrumentation for discharge pressure switches	SS	Prevents over pressurization of the pump discharge and inline components by stopping the pumps on detection of excessive discharge pressure.	Section 4.4.39, PDSA – PT Facility
UFP Power Flush System			
• Ultrafilter loop power flush systems	SS	Prevents a hydrogen explosion in the Hot Cell portions of the ultrafilter loops or loop components caused by long term accumulation of hydrogen in the loop.	Section 4.4.41, PDSA - PT Facility
Waste Transfer/Process Piping and Process Vessel Isolation Valves			
• Piping, jumpers, valves and other inline components located in the hot cell downstream of the first isolation valves for the UFP vessels • Service piping penetrations in to the UFP Vessels • Access ports on the UFP vessels that terminate in either a C3 or C5 area above the associated vessel. • Process isolation valves for the UFP feed vessels	SS	Confine radioactive process liquids, the release of which could result in radioactive dose in excess of RES for anticipated events.	Section 4.4.42, Table 4A-4, PDSA – PT Facility

Basis Discussion: This requirement is on "HOLD" due to Nuclear Safety Engineering's (NSE) indication of an intent to re-perform the Hazards Analysis and Control Selection for pretreatment systems, therefore SSC designations for safety and safety functions are likely to change. [ALARA] [24590-WTP-ATS-MGT-15-0387]

Verification: Verification is expected to be achieved through the following:

Verif. Method	Verif. By	Plan	Notes/Comments
I	ENG	Review design to verify for correct safety designations and safety function.	*Document in EQPs*

3.4.2.2 Seismic Design

Requirement: **[HOLD]** Equipment, piping, instruments, controls requiring operator action and monitoring, and components of the UFP system, including PAM instruments shall be designed for seismic conditions in accordance with the Table 3-4, below. [Appendix B, Sections B.5, B.8, and Table B-2, BOD, [ID : DB-ENG-01-

001 ID#12894] [ID : DB-ENG-01-001 ID#12895] [ID : DB-ENG-01-001 ID#13097]][Sections, 4.3.4.3, 4.3.4.4, 4.3.5.3, 4.3.5.4, 4.3.5.5, 4.3.12.1, 4.3.29.1, 4.3.29.3, 4.3.29.4, 4.3.29.5, 4.3.29.6, 4.3.30.3, 4.4.6.3, 4.4.6.4, 4.4.6.5, 4.4.9.3, 4.4.9.4.1, 4.4.9.4.2, 4.4.9.4.4, 4.4.15.3, 4.4.21.3, 4.4.30.3, 4.4.30.3, 4.4.35.4, 4.4.35.3, 4.4.35.5, 4.4.36.3, 4.4.39.2, 4.4.41.3, 4.4.42.3, Table 4A-3, and Table 4A-4, PDSA – PTF Facility, [ID : WTP-PSAR-ESH-01-002-02 ID#13991] [ID : WTP-PSAR-ESH-01-002-02 ID#14009] [ID : WTP-PSAR-ESH-01-002-02 ID#14023] [ID : WTP-PSAR-ESH-01-002-02 ID#14310] [ID : WTP-PSAR-ESH-01-002-02 ID#14313] [ID : WTP-PSAR-ESH-01-002-02 ID#14024] [ID : WTP-PSAR-ESH-01-002-02 ID#14025] [ID : WTP-PSAR-ESH-01-002-02 ID#14027] [ID : WTP-PSAR-ESH-01-002-02 ID#14031] [ID : WTP-PSAR-ESH-01-002-02 ID#15318] [ID : WTP-PSAR-ESH-01-002-02 ID#14245] [ID : WTP-PSAR-ESH-01-002-02 ID#14249] [ID : WTP-PSAR-ESH-01-002-02 ID#14665] [ID : WTP-PSAR-ESH-01-002-02 ID#14239] [ID : WTP-PSAR-ESH-01-002-02 ID#14244] [ID : WTP-PSAR-ESH-01-002-02 ID#14325] [ID : WTP-PSAR-ESH-01-002-02 ID#14375] [ID : WTP-PSAR-ESH-01-002-02 ID#14251] [ID : WTP-PSAR-ESH-01-002-02 ID#14262] [ID : WTP-PSAR-ESH-01-002-02 ID#14464] [ID : WTP-PSAR-ESH-01-002-02 ID#14307] [ID : WTP-PSAR-ESH-01-002-02 ID#14329] [ID : WTP-PSAR-ESH-01-002-02 ID#14331] [ID : WTP-PSAR-ESH-01-002-02 ID#14335] [ID : WTP-PSAR-ESH-01-002-02 ID#14596] [ID : WTP-PSAR-ESH-01-002-02 ID#14669] [ID : WTP-PSAR-ESH-01-002-02 ID#14671] [ID : WTP-PSAR-ESH-01-002-02 ID#14665] [ID : WTP-PSAR-ESH-01-002-02 ID#14683] [ID : WTP-PSAR-ESH-01-002-02 ID#14731] [ID : WTP-PSAR-ESH-01-002-02 ID#14768] [ID : WTP-PSAR-ESH-01-002-02 ID#15277] [ID : WTP-PSAR-ESH-01-002-02 ID#16489] [ID : WTP-PSAR-ESH-01-002-02 ID#16490] [ID : WTP-PSAR-ESH-01-002-02 ID#16486] [ID : WTP-PSAR-ESH-01-002-02 ID#16523] [ID : WTP-PSAR-ESH-01-002-02 ID#16524] [ID : WTP-PSAR-ESH-01-002-02 ID#16525] [ID : WTP-PSAR-ESH-01-002-02 ID#16510] [ID : WTP-PSAR-ESH-01-002-02 ID#14463]][Section 4.1, and 4.2, Safety Criterion 4.1-3, and 4.2-3, SRD. [ID : SRD-ESH-01-001-02 ID#1519] [ID : SRD-ESH-01-001-02 ID#42]]

Table 3-4 UFP Seismic Design

Description	**Seismic Category**	**Reference** (Section 4.1-3, Safety Criterion, SRD)
Hydrogen Mitigation, Purge and Mixing SSC's, UFP Vessels:		
Air supply piping, including isolation and check valves (force purge system)	SC-I	Section 4.3.29.3, PDSA – PT Facility
Vent process system (PVP) piping, vessel connections and collection headers		Sections 4.3.12.1, 4.3.29.1, 4.3.29.5, PDSA – PT Facility
PJMs, air supplying piping, racks and safety controls (mixing)		Sections 4.4.35.4, 4.3.29.1, 4.4.35.3, 4.4.35.5, Table 4A-3, PDSA – PT Facility
Vessel level detectors (bubblers) and level detector flush		
Vessel level detector flush water supply		
Air spargers, piping, flow instrumentation and supports		Sections 4.3.29.5, 4.4.9.4.1 PDSA – PT Facility
Anti-foam and caustic addition provisions		
HPAV vent and flush valve interlocks		Section 4.4.41.3, PDSA – PT Facility
UFP Feed and Preparation Vessels		Section 4.3.4.4, 4.3.29.4, 4.4.35.4, PDSA – PT Facility
UFP Permeate Vessels		Sections 4.3.4.4, 4.3.29.4, 4.4.35.4 PDSA – PT Facility

Description	Seismic Category	Reference (Section 4.1-3, Safety Criterion, SRD)
UFP Permeate Vessels PJMs	SC-III	Sections 4.3.4.3, Table 4A-3, PDSA – PT Facility, Section 4.1-3
UFP Permeate Vessels RFDs and controls		Section 4.3.4.3, Table 4A-3, PDSA – PT Facility, Section 4.1-3
HPAV vent and flush valve interlocks to prevent reverse flow of process slurries into C3 area piping		Section 4.4.41.3, PDSA – PT Facility
HPAV Controls		Table 4A-3 PDSA, – PTF Facility
SC Waste Transfer/Process Piping, and Process Vessel Isolation Valves		
Process vessel isolation valves and interlocks	SC-I	Sections 4.3.5.3, Table 4A-3 4.3.21.2, PDSA– PT Facility, Section 4.1-3, Safety Criterion 4.1-3, SRD
Vessel piping out to and including the hotcell suction isolation valves		Sections 4.3.5.3, Table 4A-3 4.3.21.2, PDSA– PT Facility, Section 4.1-3, Safety Criterion 4.1-3, SRD
UFP Filtration Loop		
Isolation valves on permeate side of the ultrafilters and subsequent downstream valves	SC-I	Table 4A-3, PDSA – PT Facility
Black cell and hard to reach vessels that have SC hydrogen mitigation system attached		Sections 4.3.4.4, 4.3.29.4, 4.4.35.4, 5.6.23, PDSA – PT Facility
UFP filtration loop wash line valve on suction side of pump	SC-IIIE	Table 4A-3, PDSA – PT Facility, Appendix B.5, BOD
UFP filtration loop flush function components		Table 4A-3, PDSA – PT Facility
SS valve interlocks for the UFP feed preparation recirculation pump discharge high point flush valves		Section 4.4.36.3, PDSA – PT Facility
SS valve interlocks for the UFP feed pump discharge high point flush valves		Section 4.4.36.3, PDSA – PT Facility,
SS valve interlocks for the suction flush/reagent valve and power flush valves to the loop circulation pumps		Section4.4.36.3, PDSA – PT Facility,
UFP safety power flush system components and controls		Section 4.4.41.3, PDSA – PT Facility,
UFP heat exchangers		Section 4.4.15.3, PDSA - PT Facility
Vessel Overflow Piping		
Vessel overflow piping, sealpots piping supports and embedment's	SC-IIIE	Sections 4.4.6.3, 4.4.6.4, 4.4.6.5, PDSA – PT Facility, Appendix B.5, BOD
UFP Reagent Bulges		
Utility supply isolation valves and associated interlocks	SC-III	Sections 4.4.9.3, 4.4.36.3, PDSA – PT Facility
UFP BULGE enclosure (shell)		Sections 4.4.9.3, 4.4.9.4.2, PDSA – PT Facility, Section 4.1-3

Description	Seismic Category	Reference (Section 4.1-3, Safety Criterion, SRD)
UFP BULGE SS valve interlocks		Sections 4.4.9.3, 4.4.36.3, PDSA – PT Facility
Non-Newtonian Waste Transfer Line Drain Valves and Interlocks		
Transfer line drain valve and associated interlocks that limit the probability that non-Newtonian waste being transferred into the PWD vessels.	SC-III	Section 4.4.30, PDSA – PT Facility
Control of Hydrogen in Piping and Ancillary Vessels (HPAV)		
PJM and RFD charge vessel venting	SC-III	Section 4.4.35, Tables 4A-3 and 4A-4 PDSA – PT Facility
Newtonian pump suction and discharge high point vents		
Newtonian pump suction and discharge line high point vent systems		
Non-Newtonian pump suction and discharge lines purge and water flush system		
UFP filtration loop purge/flush system and isolation valves		
Vent, Purge, and Flush Backflow Prevention for HPAV Controls		
Isolation valve interlocks to the process systems pumps or valves	SC-IIIE	Section 4.4.35, Tables 4A-3 and 4A-4 PDSA – PT Facility, Appendix B.5, BOD
UFP Feed Pump Discharge Pressure Switches		
UFP Feed Pumps, controls and instrumentation for discharge pressure switches	SC-IIIE	Section 4.4.39, PDSA – PT Facility, Appendix B.5, BOD
Waste Transfer/Process Piping and Process Vessel Isolation Valves		
Piping, jumpers, valves and other inline components located in the hot cell downstream of the first isolation valves for the UFP vessels	SC-III	Section 4.4.42, Table 4A-4, PDSA – PT Facility
Service piping penetrations in to the UFP Vessels		
Access ports on the UFP vessels that terminate in either a C3 or C5 area above the associated vessel.		
Process isolation valves of high consequence vessels		

Basis Discussion: Section 2.4.12 of 24590-WTP-PSAR-ESH-01-002-01, *Preliminary Documented Safety Analysis to Support Construction Authorization; General Information* (PDSA – General) states the following: "All components and parts of the equipment that provide or contribute to the safety functions and accident monitoring functions, including equipment supports and anchorage, shall be qualified accordingly." This qualification ensures SSCs meet the designated seismic design requirements. The 24590-WTP-SRD-ESH-01-001-02, *Safety Requirements Document Volume II (SRD)*, Safety Criterion 4.1 3 details the equivalence of the WTP seismic category to the seismic performance category of DOE STD 1020-94, *Natural Phenomena Hazards Design and Evaluation Criteria for Department of Energy Facilities*. The SRD also states that SSCs designated

as safety SSCs be designed to withstand the effects of (natural phenomena hazard) NPH events (e.g., earthquakes, wind, and floods) without loss of capability to perform specified safety functions.

This requirement is on "HOLD" due to Nuclear Safety Engineering's (NSE) indication of an intent to re-perform the Hazards Analysis and Control Selection for pretreatment systems, therefore SSC designations for safety and safety functions are likely to change. [ALARA] [24590-WTP-ATS-MGT-15-0387]
Verification: Verification is expected to be achieved through the following:

Verif. Method	Verif. By	Plan	Notes/Comments
A/T	**ENG/ SUB**	Analysis or testing performed on safety SSCs to demonstrate capability to withstand seismic event.	EQPs will be prepared for all safety components. See the latest revision of 24590-WTP-PD-ENG-0001, *Equipment Qualification Program Description* for additional information, including independent peer review of seismic evaluation of the applicable SSCs (WTP and supplier-supplied) in accordance with requirements of DOE-STD-1020-94, *Natural Phenomena Hazards Design and Evaluation Criteria for Department of Energy Facilities.*
I	**ENG**	Review design to verify conformance to the as-tested/analyzed configuration.	*This is expected to be documented in the EQPs.*

3.4.2.3 Seismic Interaction

Requirement: All permanently mounted UFP equipment not specified in Table 3-4 shall, at minimum, be designated Seismic Category-IV. Interaction effects shall be considered when determining the seismic category of individual items and, where an adverse seismic interaction with SC or SS equipment exists, adequate measures shall be taken to preclude the adverse interaction. [Safety Criterion 4.1-3, SRD, [ID : SRD-ESH-01-001-02 ID#1519]][Appendices D.7, D.7.1, D.7.8, Section 10.2.15, BOD, [ID : DB-ENG-01-001 ID#13213] [ID : DB-ENG-01-001 ID#13213] [ID : DB-ENG-01-001 ID#13284] [ID : DB-ENG-01-001 ID#13286] [ID : DB-ENG-01-001 ID#13308] [ID : DB-ENG-01-001 ID#13309]]

Basis Discussion: In accordance with 24590-WTP-GPG-ENG-033, *Evaluation for Seismic Interaction Effects,* equipment that is non-safety may be identified as having a potential for adverse interaction with safety equipment during a seismic event. Where a resolution strategy is selected to increase the seismic category of the source SSC to protect the safety (target) SSC, the resulting seismic category of the equipment may be greater than SC-IV. In those cases, the equipment design is verified to meet the higher seismic performance category such that the target SSC is protected.

Verification: Verification is expected to be achieved through:

Verif Method	Verif. By	Plan	Notes/Comments
I	ENG	Evaluate the UFP system to verify seismic interaction effects per 24590-WTP-GPG-ENG-033 and devise a control strategy for all open interactions.	*May be documented in a Seismic Interaction list.*
A/T	ENG/SUP	Analysis or testing performed on SSCs to demonstrate the ability to withstand the seismic loadings for their respective seismic categories to the extent necessary to prevent interactions.	*May be documented in an Equipment Seismic Qualification (ESQ) Review Form or supplier seismic design report.*
I	ENG	Review design to verify conformance to the as-tested/as-analyzed configuration.	*May be documented in an assessment/evaluation report.*

3.4.2.4 Use of RGM or WSGM for UFP Component Designs

Requirement: If portions of the UFP system are determined to require design to SC-I or SC-II, either based on component classification or based on the results of seismic interaction evaluation in accordance with 24590-WTP-GPG-ENG-033, *Evaluation for Seismic Interaction Effects* (i.e. SC-III/IV components are determined to have potential for negative seismic interaction with SC components and the selected design solution is to design as SC-II/I), then the design criteria indicated in Appendix B, Section B.6 or B.7 (as appropriate) shall be applied with respect to use of RGM or WSGM as input to the design for seismic stresses. [Section 16.4.2.1 and Appendix B, BOD, [ID : DB-ENG-01-001 ID#12804] [ID : DB-ENG-01-001 ID#12883] [ID : DB-ENG-01-001 ID#12886]]

Basis Discussion: None.

Verification: Verification is expected to be achieved through the following:

Verif. Method	Verif. By	Plan	Notes/Comments
I	ENG	Review the design to verify the UFP components are designed to RGM or WSGM criteria, as required.	

3.4.2.5 Remotely Maintainable and Replaceable Equipment and Components

Requirement: **[HOLD]** In-cell/in-cave maintainable or replaceable equipment and consumable components, shall be designed with remote handling features and with as-built precision to be capable of being removed, inspected, replaced, recovered, disconnected, re-connected and re-installed from in-cell areas of high radiation, being performed without the spread of particulates, thus minimizing the potential for release of radioactive contamination to the cell environment. [Sections 5.2, 6.2, 8.1.3, 9.1, 14.1, and 14.10 ORD, [ID : RPT-OP-01-001 ID#1047] [ID : RPT-OP-01-001 ID#1801] [ID : RPT-OP-01-001 ID#1190] [ID : RPT-OP-01-001 ID#1463] [ID : RPT-OP-01-001 ID#1147] [ID : WTP-RPT-OP-01-001 ID#1532]][Sections 6.7, 8.1.2, 9.12, 9.4.2, 11.3.2, 11.4.1, 11.7.4, 11.8.3.1, and 11.8.3.3, BOD, [ID : DB-ENG-01-001 ID#10415] [ID : DB-ENG-01-001 ID#10698] [ID : DB-ENG-01-001 ID#11150] [ID : DB-ENG-01-001 ID#10966] [ID : DB-ENG-01-001 ID#10970] [ID : DB-ENG-01-001 ID#11391] [ID : DB-ENG-01-001 ID#11392] [ID : DB-ENG-01-001 ID#11420] [ID : DB-ENG-01-001 ID#11422] [ID : DB-ENG-01-001 ID#11424] [ID : DB-ENG-01-001

ID#11425] [ID : DB-ENG-01-001 ID#11426] [ID : DB-ENG-01-001 ID#11427] [ID : DB-ENG-01-001 ID#11428] [ID : DB-ENG-01-001 ID#11565] [ID : DB-ENG-01-001 ID#11532]](I.1)

Basis Discussion: Designated in-cell/in-cave equipment and components with less than a 40 year design life are required to have design provisions supporting their need for remote maintenance or replacement. Remote maintenance operations are generally to be performed in the designated maintenance area. In-cell/in-cave equipment disassembly, removal to maintenance area, and/or replacement is accomplished by local remote handling equipment or by remote handling equipment in dedicated maintenance areas or caves. In general, process systems and equipment within cells or caves that could fail during operations are designed for safe recovery, replacement, or redundancy. Remote handling features such as in cave cranes, power manipulators, or master slave manipulators help to facilitate remote maintenance or replacement. [ALARA]

This requirement is on HOLD due to a pending ORDCN that is expected to provide more definitive criteria regarding tolerances and as-built precision to be captured in the dimensional records for remotable equipment and attachment points to support fabrication and fit-up of future replacement equipment. [24590-WTP-ATS-MGT-15-0391]

Verification: Verification is expected to be achieved through the following:

Verif. Method	Verif. By	Plan	Notes/Comments
I	**ENG**	Review of design to verify that all UFP replaceable components not recovered by other means are remotely removable.	*Document in an evaluation/assessment. Recommend using a software program such as "IGrip" (or similar)*
I	**ENG**	Verify as-built design is provided with sufficient accuracy to facilitate fabrication of replacement remotable components.	*Document in an assessment/evaluation.*
D	**SU/COM**	Demonstrate remotability in accordance with 24590-WTP-PL-RACT-RT-0001, *WTP Remotability Verification Plan.*	*Physical demonstration*

3.4.2.6 Process Vessel Systems Design to Washington Administrative Codes (WAC)

Requirement: Vessels, including piping, and ancillary equipment that are used to treat or store dangerous or mixed waste shall be designed to meet Washington State Dangerous Waste Regulations (WAC 173-303-640), including the capability to meet in service integrity assessments. [Section 11.6.9, and 14.10, BOD, [ID : DB-ENG-01-001 ID#11499] [ID : DB-ENG-01-001 ID#12133]][Section 8.2, ORD, [ID : RPT-OP-01-001 ID#1167]][Section III.10.E.9.c.v, DWP, [ID : WA7890008967 WTP ID#356]]

Basis Discussion: [ALARA]

Verification: Verification is expected to be achieved through the following:

Verif. Method	Verif. By	Plan	Notes/Comments
I	**ENG**	Review design of liquid process waste systems to verify conformance to WAC 173-303-640, including capability to perform in service integrity assessments.	*Document in evaluation/assessment report.*

3.4.2.7 Isolation from Radioactive and Hazardous Materials

Requirement: The UFP system equipment or vessels containing radioactive substances shall include suitable isolation design provisions to prevent diffusion, siphoning, backflow, or other methods of leakage of the contents to areas or systems where the material is not intended. [Section 5.1.2, BOD, [ID : DB-ENG-01-001 ID#10259]][Section 7.1, and 14.2, ORD [ID : RPT-OP-01-001 ID#1101] [ID : RPT-OP-01-001 ID#1102] [ID : RPT-OP-01-001 ID#1477] [ID : RPT-OP-01-001 ID#1100] [ID : RPT-OP-01-001 ID#1473]]

Basis Discussion: The non-contaminated systems such as utility supply lines (i.e., air, steam, plant wash, and cooling water) to the UFP systems are used to spray, decontaminate, provide motive force for ejectors, injection of air injection of purge air into vessels, an automatic air blow, and for other provisions and purposes, can be vulnerable to cross-contamination from all waste transfer lines and vessels by backflow or siphoning. These systems have valves or other devices to prevent backflow or to isolate in the event of a leak (e.g., heat exchanger). Also see sections 3.20.1.7, *Siphon Prevention*, 3.20.1.8, *Steam Valve Racks*, and 3.20.1.3, *Process, Utility, and Instrumentation Services Piping Cross Contamination*, for similar requirements regarding piping design.

The preferred strategy to prevent suck-back or siphoning of process liquids into unshielded areas is to ensure service piping that extends below the liquid level in the process vessels or into process piping exits the shielded areas at a height sufficient to overcome the ability of atmospheric pressure to lift the liquid out of the shielded area. This feature is referred to as "barometric head." The barometric head requirement is applicable when the line under consideration extends below the process vessel high liquid level, is itself liquid filled or filled with a condensable gas (e.g., steam), or is provided with a vacuum source capable of drawing liquid out into non-shielded portions of the line, and a suck-back or siphon event would challenge exposure standards for the facility worker or co-located worker.

If the barometric head requirement is applicable, then calculation of the required elevation should use the maximum vessel operating level as the datum, and can account for density of the waste provided that the density used bounds all waste densities that could challenge exposure standards. Lines that have approved alternate controls are not required to meet the barometric head requirement. [ALARA]

Verification: Verification is expected to be achieved through the following:

Verif. Method	Verif. By	Plan	Notes/Comments
I	ENG	Review design to verify inclusion of backflow prevention devices, or isolation valves/devices on utility/support systems that interface with contaminated portions of UFP systems.	*Document in an evaluation/assessment, Radiological Engineering to participate in this review.*

3.4.2.8 Out-Cell to In-Cell Cable Design

Requirement: Cables passing from out-cell to in-cell via offset tubes, or equivalent design, shall have the out-cell termination point higher than in-cell, and be sealed at the out-cell side to facilitate cable removal and replacement, and to ensure containment. [Section 14.8, ORD, [ID : WTP-RPT-OP-01-001 ID#1526]]

Basis Discussion: [ALARA]

Verification: Verification is expected to be achieved through the following:

Verif. Method	Verif. By	Plan	Notes/Comments
I	ENG	Review design documentation to verify cabling passing from in-cell to out-cell meets the sealing and elevation criteria.	

3.4.3 System Interface Requirements

[HOLD] Requirements associated with specific system interfaces are discussed in the subsequent requirement sections title "System Interface Requirements." The UFP system interfaces are listed in Table 3-5 below:

Table 3-5 UFP System Interfaces

Locator	Interfacing System	Nature of Interface
AFR	Anti-foam reagent system	Provides the anti-foaming reagent to both the feed preparation and feed vessels.
ASX	Auto sampling System	Provides sampling capabilities for vessel UFP feed preparation and UFP feed vessels.
CHW	Chilled Water Systems	Chilled water originating in BOF is supplied via CHW pumps to the vessel cooling jackets for UFP feed preparation and UFP feed vessels. Chilled water originating in the PTF chilled water is supplied via separate CHW pumps by a secondary CHW loop to UFP heat exchangers. The PTF CHW is composed of primary and secondary closed recirculating loops interfacing at heat exchangers located in the PTF.
CXP	Cesium Ion Exchange Process System	Ultrafiltration collected in UFP permeate vessels is transferred to cesium ion exchange vessels to feed the CXP ion exchange columns. Heated IX feed from CXP heat exchanger is circulated back to UFP permeate vessels to maintain the operating temperature in UFP permeate vessels for precipitation mitigation.
DIW	Demineralized Water	Provides clean water for flushing and process washing (if required)
FEP	Waste Feed Evaporation Process System	Evaporator concentrate from FEP vessels may be received in UFP feed preparation vessels for further processing. Furthermore, the evaporator concentrate received in UFP feed preparation vessels can be recycled to the front end evaporator (via FEP vessels) for further concentration if sodium molarity is too low or for removal of plant wash effluent from in UFP feed preparation vessels.
		Slurry from UFP feed vessels may be routed to FEP vessels for further concentration.
FRP	Waste Feed Receipt Process System	Feed from FRP may by-pass the waste feed evaporator and be routed directly to UFP feed preparation vessels.

Locator	Interfacing System	Nature of Interface
HLP	HLW Feed Receipt Process System	Feed from HLP vessels may be received in UFP feed preparation vessels for HLW solids treatment. Treated solids and Sr/TRU precipitate are transferred to the HLW lag storage vessels for staging prior to immobilization. There is the option to transfer the intermediate products (Sr/TRU precipitate or treated solids) directly to the HLW blending vessel, if necessary.
HPS	High Pressure Steam	High pressure steam in also supplied to steam spargers UFP feed preparation and UFP feed vessels. High pressure steam is also supplied to external steam jet heaters for heating UFP permeate vessels.
ISA	Instrument Service Air	Instrumentation and control valves for the UFP system receive instrument air.
LVE	Low Voltage Power Distribution	Low voltage power for pump motors.
NAR	Nitric Acid Reagent System	2M nitric acid is required for acidic washing of the ultrafilters. Nitric acid is received in UFP feed vessels and pulse pots.
PCJ	Process Control System	The PCJ is a plant-wide system for monitoring and control of the process, ventilation, and services within the PT, HLW Vitrification, and LAW Vitrification facilities. The PCJ is an integral part of the Integrated Control Network (ICN) and provides the following non-safety functions: • Monitoring of independent protection trips • Device interlocks. The PCJ also provides startup initiation, status monitoring, and shutdown initiation of independently-controlled services and utilities. Requirements and features of the system that are specified for UFP are discussed in this system design description.
PJV	Pulse Jet Mixer Vent System	Spent compressed air required for operation of fluidic devices (RFD and PJM) will be discharged to the PJV system.
PPJ	Programmable Protection System	The PPJ is the plant-wide system for monitoring and control of the safety designated instrumentation and controls. This system works independently of the ICN. Requirements and features of the system that are specified to UFP are discussed in this system design description.
PSA	Process Service Air	Process air is supplied for PJM operation, RFD operation, air sparging in UFP feed vessels, purging of steam spargers, and breakpots.
PSW	Process Service Water	Provides water for water used in pump seals.
PVP	Pretreatment Vessel Vent Process System	Passive purge air inlet, forced purge air, vessel ventilation and piping ventilation is provided by the PVP system.

Locator	Interfacing System	Nature of Interface
PWD	Plant Wash and Drain Process System	Slurry washes following caustic leaching and oxidative leaching which are separated from the solid fraction may be collected in the acid and caustic effluent vessels. Routed and post washing of vessels UFP vessel overflows to the plant PWD overflow vessel. Plant wash effluent from vessel UFP permeate vessels is routed (using heel removal pump) to the plant wash vessel PWD vessel via PWD breakpots. Ultrafilter spent cleaning acidic/caustic solutions and solids washings are transferred from UFP feed vessels to PWD vessels via PWD break-pots for treatment and disposal.
RLD	Radioactive Liquid Waste Disposal System	Receive process condensate for cleaning or chemistry adjustment in UFP process vessels and pulse pots. Receive process condensate for solids washings and dilution of caustic (used for ultrafilter cleaning) in UFP feed vessels or at the suction of UFP-PMP-00042A/B.
SHR	Sodium Hydroxide Reagent System	Receive 19M NaOH for caustic leaching or chemistry adjustments in UFP process vessels. Receive 19M NaOH for caustic leaching in UFP feed vessels or at the suction of UFP-PMP-00042A/B. Receive 2M NaOH for cleaning of ultrafilters in UFP feed vessels and UFP-PP-00001A/2A/3A and UFP-PP-00001B/2B/3B.
SPR	Sodium Permanganate Reagent System	Receive 1M maximum strength sodium permanganate for Sr/TRU precipitation in UFP feed preparation vessels and for oxidative leaching in UFP feed vessels or at the suction of UFP-PMP-00042A/B.
STR	Strontium Nitrate Reagent System	Receive 1M maximum strength strontium nitrate for Sr/TRU precipitation in UFP feed preparation vessels.
TCP	Treated LAW Collection Process System	Capability to transfer concentrated slurry from UFP feed preparation vessels to TCP-VSL-00001 for processing in LAW vitrification.

The system interfaces are on "HOLD" because SHSVD is expected to result in changes to the nature of interfaces with reagent systems to support UFP process capabilities, and the removal of vessel cooling jackets which eliminates the interface with CHW. [24590-WTP-ATS-MGT15-0389](H.1, H.2, H.3, H.4)

3.4.3.1 Inline Mixing Capability

Requirement: [HOLD] The UFP will have in-line capability to mix chemical reagents used in the leaching process with UFP vessel recirculation pumps to shorten mixing times. [Section C.7(b)(7)(ii), DOE-BNI Contract, [ID : DE-AC27-01RV14136 Section C ID#1260]](A.3)

Basis Discussion: This capability is to permit operational flexibility for sludge washing, caustic and oxidative leaching and treatment capacity.

This requirement is on HOLD due to the SHSVD may eliminate the need for the ultrafiltration-loop return line to be fitted with a branched nozzle to facilitate mixing. [24590-WTP-ATS-MGT-15-0389]

Verification: Verification is expected to be achieved through the following:

Verif. Method	Verif. By	Plan	Notes/Comments
I	ENG	Review the design to verify the inline mixing components conform to the analysis.	
D	SU/COM	Perform a demonstration to verify the capability to perform in-line mixing of reagents.	

3.4.3.2 Startup, Testing and Commissioning

Requirement: The system design shall include provisions, as necessary, to support startup and commissioning testing as identified in Appendix A. [Section 11.4.7, and 11.5.1, BOD, [ID : DB-ENG-01-001 ID#11448] [ID : DB-ENG-01-001 ID#11449] [ID : DB-ENG-01-001 ID#11459]][Section 9.1, ORD, [ID : RPT-OP-01-001 ID#1173]]

Basis Discussion: Additional nozzles, branch lines, removable spools or other provisions that are needed to support identified testing are to be provided, as jointly determined by the design agency, startup, and commissioning during the design development and review process, with consideration given to the tests and demonstration activities required for requirement verifications specified in Appendix A. This may include, but is not limited to, provisions to support the introduction or removal of fluids, gases, reagents or simulants; or the availability of special test ports, sampling ports, or temporary instruments or instrument lines. [ALARA]

Verification: Verification is expected to be achieved through the following:

Verif. Method	Verif. By	Plan	Notes/Comments
I	ENG	Review design to verify the provisions needed to support tests/demonstrations to be performed during startup and commissioning are included.	*Document in an assessment/evaluation report.* *Startup and Commissioning to participate in the assessment/evaluation.*

3.4.4 Other Technical, Specialty, Operations and Maintenance Requirements

3.5 Vessels

3.5.1 Mission and Functional / Performance Requirements (Including States/Modes)

3.5.1.1 Codes and Standards

Requirement: The UFP vessels, nozzles and breakpot shall be designed to American Society of Mechanical Engineers (ASME) *Boiler and Pressure Vessel Code*, Section VIII, Division 1 and Division 2 as tailored in Appendix L of the SRD. [Safety Criterion 4.2-2, Appendix L, and Appendix M 2.0, SRD, [ID : SRD-ESH-01-001-02 ID#41] [ID : SRD-ESH-01-001-02 ID#55] [ID : SRD-ESH-01-001-02 ID#1254] [ID: SRD-ESH-01-001-02 ID#1255] [ID : SRD-ESH-01-001-02 ID#1328]][Sections 11.7.1, and 16.4.2.4, BOD, [ID: DB-ENG-01-001 ID#11510] [ID: DB-ENG-01-001 ID#12812]] [Sections 4.3.29.4 and 4.4.35.4, PDSA - PT Facility, [ID :

WTP-PSAR-ESH-01-002-02 ID#14247] [ID : WTP-PSAR-ESH-01-002-02 ID#14667]][Section III.10.E.9.c.v, DWP, [ID : WA7890008967 WTP ID#356]]

Basis Discussion: None.

Verification: Verification is expected to be achieved through the following:

Verif. Method	Verif. By	Plan	Notes/Comments
A	ENG	Analysis of the UFP vessel design prepared in accordance with ASME Section VIII, Division 1 and Division 2.	*Documented in RVM.*
I	ENG	Review of design to verify conformance to the results of the analysis.	*Documented in RVM.*

3.5.1.2 UFP Vessel Batch Volumes and Capacities

Requirement: [HOLD] The UFP vessels shall have design batch volumes per Table 3-6 and maximum capacities shall conform to the DWP. [Section 6.3.1, Table 6-2, BOD, [ID : DB-ENG-01-001 ID#13536] [ID : DB-ENG-01-001 ID#13537] [ID : DB-ENG-01-001 ID#13538]][Section III.10.E.1.b, DWP, [ID : WA7890008967 WTP ID#309]](A.1, A.9, B.1, B.10, D.1)

Table 3-6 UFP Tank Capacities

Vessel	Design Batch Volume (gal)
Feed Preparation Vessels	45,000[1]
Feed Vessels	24,820
Permeate Vessels	21,800

1. Value has been revised from value used in WTP Contract run 24590-WTP-MRR-PET-08-002. Acceptability has been demonstrated in 24590-WTP-MRR-PET-11-001.

Basis Discussion: The batch volume includes HLW concentrate, LAW concentrate, and line flushes. The UFP is designed to accommodate the receipt and treatment of specific waste volumes, using batch processing capabilities, to meet the design throughput requirements. Batch volume and nominal transfer rate are used as inputs in the overall throughput analysis to ensure UFP system operations are designed for a 60-day feed forward capability to achieve a 6 metric tons of HLW glass (MTG)/day and to support the 100 % capacity HLW melter throughput for glass production of 7.5 MTG/day, as stipulated in the WTP Contract.

This requirement is on "HOLD" due to the development of a SHSVD design that will affect the UFP process vessels' function, capacity and transfer rates. [24590-WTP-ATS-MGT-15-0389]

Verification: Verification is expected to be achieved through the following:

Verif. Method	Verif. By	Plan	Notes/Comments
I	ENG	Review the design to verify conformance with the requirement, include verification that the vessel capacities are in alignment with the DWP.	

3.5.1.3 Thermal Cycling of Vessels with Heating/Cooling Components

Requirement: UFP system vessels requiring heating and cooling, shall be designed to have independent heating and cooling components. [Section 14.2, ORD, [ID : RPT-OP-01-001 ID#1471]][Sections 11.7.4, BOD, [ID : DB-ENG-01-001 ID#11534]](A.4, A.7, B.4, B.9)

Basis Discussion: This requirement is intended to avoid degradation of the vessel due to thermal cycling that could cause premature failure. All in-cell vessels and pipe work, which are inaccessible, are essentially non-maintainable, and as such, their integrity ensures a design life commensurate with that of the WTP.

Verification: Verification is expected to be achieved through the following:

Verif. Method	Verif. By	Plan	Notes/Comments
I	ENG	Review design to verify the heating and cooling of the UFP process includes independent heating and cooling components.	

3.5.1.4 Vessel Washing and Decontamination.

Requirement: The UFP process vessels shall be equipped with interior perimeter spray rings, or equivalent, for decontamination and washing. The system shall have piping and valve systems with the capability to add decontamination chemicals. [Section 14.1, 14.2, and 20.0, ORD, [ID : RPT-OP-01-001 ID#1467] [ID : RPT-OP-01-001 ID#1475] [ID : RPT-OP-01-001 ID#1717] [ID : RPT-OP-01-001 ID#1720] [ID : RPT-OP-01-001 ID#1721]][Sections 11.7.4, and 16.4.8, BOD, [ID : DB-ENG-01-001 ID#12861] [ID : DB-ENG-01-001 ID#11534]](F.1, F.1.2)

Basis Discussion: Vessel washing takes place on an infrequent basis and occurs at the discretion of Plant Operations. A substantial and important element of the design process is the incorporation of features to minimize the cost and complexity of deactivation, closure, and decommissioning. [ALARA]

Verification: Verification is expected to be achieved through the following:

Verif. Method	Verif. By	Plan	Notes/Comments
I	ENG	Review design to verify process vessels contain spray rings or have other methods for decontamination, including the appurtenances necessary to add decontamination chemicals to the wash and flush water.	

3.5.1.5 Heel Removal from Vessels

Requirement: [HOLD] The UFP system will have the capability to remove heels from the ultrafiltration vessels to move treated solids forward in the process and minimize recycle time. [Section C.7(b)(7)(iv), DOE-BNI Contract, [ID : DE-AC27-01RV14136 Section C ID#1262]]

Basis Discussion: The heel management system is designed to remove most of the remaining solids and liquid slurry from specific vessels as part of normal process operations. The heel management system will be used to remove solids from a vessel to preclude the accumulation of solids over time. Because heel management allows

removal of more material from a vessel than during normal operations, it also can be used for heel removal at the end of the plant life. Refer to 24590-WTP-DC-ENG-12-001, *Pulse Jet Mixed Vessel Heel Management System Functional Design Criteria*, for detailed information about the heel management system.

This requirement is on "HOLD" due to the future SHSVD change, which may eliminate the need for a separate heel removal subsystem. The SHSVD heel removal requirement is anticipated to have the capability to perform this function with the same transfer pump as for normal routine transfers, i.e., a separate, high-suction lift pump will not be required. [24590-WTP-ATS-MGT-15-0389]

Verification: Verification is expected to be achieved through the following:

Verif. Method	Verif. By	Plan	Notes/Comments
I	ENG	Review the design to verify the heel removal functional components are included in the design.	
D	SU/COM	Perform a demonstration of the heel removal function to verify the removal of the vessels heel.	

3.5.1.6 UFP Feed Preparation Vessel Heating

Requirement: [HOLD] The UFP feed preparation vessels shall have the capability to heat materials inside the vessels from 25°C to 90°C in 9 hours during leaching in the UFP feed preparation vessels, or 25°C to 45°C in 3 hours during preparation for leaching in the UFP feed vessels. [Section 6.1.1 and 6.3.1, BOD, [ID : DB-ENG-01-001 ID#10303] [ID : DB-ENG-01-001 ID#10336]][Section C.7(a)(16), DOE-BNI Contract, [ID : DE-AC27-01RV14136 Section C ID#1258]](A.4)

Basis Discussion: These vessels are equipped with direct steam heating. The nominal time cycle for leaching in the feed preparation vessels will be 36 hours and accounts for the filling, heating, digesting and cooling.

This requirement is on "HOLD" because SHSVD is expected to result in changes to the UFP vessels' heating and cooling functions. [24590-WTP-ATS-MGT-15-0389]

Verification: Verification is expected to be achieved through the following:

Verif. Method	Verif. By	Plan	Notes/Comments
A	ENG	Perform an analysis of the vessel to determine the mass flow rate of HPS and sizing of components necessary to accomplish the specified vessel heating requirements	
I	ENG	Review the UFP vessel design to verify conformance to the results of the analysis.	
T	SU/COM	Perform a test to verify the components in the vessel heat and maintain the temperatures as required.	

3.5.1.7 UFP Feed Vessel Heating

Requirement: [HOLD] The UFP feed vessels will have the capability to heat materials inside the vessels from 25°C to 90°C in 9 hours and 45°C to 85°C in 6 hours in preparation for leaching in the UFP feed vessels.

[Section 6.1.1, and 6.3.1, BOD, [ID : DB-ENG-01-001 ID#10303] [ID : DB-ENG-01-001 ID#10336]][Section C.7(a)(16), DOE-BNI Contract, [ID : DE-AC27-01RV14136 Section C ID#1258]](B.4)

Basis Discussion: The feed vessels are equipped with direct steam heating. Heating is used for filtration and leaching in the feed vessel in of support concentration.

This requirement is on "HOLD" because SHSVD is expected to result in changes to the UFP vessels' heating and cooling functions. [24590-WTP-ATS-MGT-15-0389]

Verification: Verification is expected to be achieved through the following:

Verif. Method	Verif. By	Plan	Notes/Comments
A	ENG	Perform an analysis of the vessel to determine the mass flow rate of HPS and sizing of components necessary to accomplish the specified vessel heating requirements	
I	ENG	Review the UFP vessel design to verify conformance to the results of the analysis.	
T	SU/COM	Perform a test to verify the components in the vessel heat and maintain the temperatures as required.	

3.5.1.8 Permeate Collection Vessel Heating

Requirement: The UFP permeate collection vessels shall be designed with the capability to maintain permeate in the vessel above the filtration temperature. [Section C.7(a)(16) and C.7(b)(7)(vi), DOE-BNI Contract, [ID : DE-AC27-01RV14136 Section C ID#1258] [ID : DE-AC27-01RV14136 Section C ID#1264]](D.3)

Basis Discussion: This minimizes the potential for post filtration precipitation of aluminum species.

Verification: Verification is expected to be achieved through the following:

Verif. Method	Verif. By	Plan	Notes/Comments
A	ENG	Perform an analysis of the UFP permeate collection system to determine the mass flow of HPS and heating components design, including filtration temperature, necessary to reach and maintain the specified filtration temperature.	
I	ENG	Review the UFP permeate collection design to verify conformance to the results of the analysis.	
T	SU/COM	Perform a test to verify the capability of the permeate collection system to maintain permeate above the filtration temperature.	

3.5.2 Nuclear Safety, ALARA, Environmental and Other Regulatory Requirements

3.5.2.1 Vessel Overflow Features

3.5.2.1.1 UFP Vessels Overflow

Requirement: Each UFP vessel shall include an overflow feature designed to provide an unobstructed escape flow path for liquids or gases during abnormal operating conditions (e.g., loss of negative pressure or vessel contents in excess of operational level limits). [Section 6.7.5, and 14.10.1.1, BOD, [ID : DB-ENG-01-001 ID#10430] [ID : DB-ENG-01-001 ID#12150]]

Basis Discussion: The overflow feature provides a pathway for the vessel liquids and headspace atmospheres to exit the UFP vessels minimizing the generation of radioactive aerosol. This line is designed to prevent the buildup of material that could cause blockages. The overflow feature directs liquid that overflows from the UFP vessels and prevents process fluid from entering the PVP/PVV piping.

Verification: Verification is expected to be achieved through the following:

Verif. Method	Verif. By	Plan	Notes/Comments
I	ENG	Review the UFP vessel design to verify incorporation of the overflow feature.	*Document in a DVR.*

3.5.2.1.2 UFP Vessel Overflow Size

Requirement: [HOLD] The UFP vessels overflow feature design shall be sized to at least meet the maximum in-flow rate while maintaining a minimum vapor headspace to allow for hydrogen dilution and prevent liquid flooding into the vessel ventilation header. [Section 4.4.6.3 and 4.4.6.5 PDSA - PT Facility, [ID : WTP-PSAR-ESH-01-002-02 ID#14307] [ID : WTP-PSAR-ESH-01-002-02 ID#14313]]

Basis Discussion: The overflow feature reduces the potential for a hydrogen explosion by ensuring an adequate headspace volume to dilute hydrogen generated in the UFP vessels.

This requirement on "HOLD" due to Nuclear Safety Engineering's (NSE) indication of an intent to re-perform the Hazards Analysis and Control Selection for pretreatment systems, therefore SSC designations for safety and safety functions are likely to change. [24590-WTP-ATS-MGT-15-0387]

Verification: Verification is expected to be achieved through the following:

Verif. Method	Verif. By	Plan	Notes/Comments
A	ENG	Perform an analysis to verify the configuration and location of the UFP vessel overflow feature will meet the required headspace for maximum inflow rate.	*Document in a DVR.*
I	ENG	Review the design to verify conformance to the analysis results.	*Document in a DVR.*

3.5.2.2 Pretreatment Vessel Vent Process System – Vessel Ventilation

Requirement: [HOLD] The UFP vessels shall interface with the PVP/PVV system to provide active air purge. [Section 4.3.4.3, 4.3.4.3.1, and 4.3.4.3.2, PDSA – PT Facility, [ID : WTP-PSAR-ESH-01-002-02 ID#13990] [ID : WTP-PSAR-ESH-01-002-02 ID#13993] [ID : WTP-PSAR-ESH-01-002-02 ID#13997] [ID : WTP-PSAR-

ESH-01-002-02 ID#13998]][Safety Criterion 4.4-3, SRD, [ID : SRD-ESH-01-001-02 ID#55]][Section 6.1, BOD, [ID : DB-ENG-01-001 ID#10291]](C.1)

Basis Discussion: The PVP system reduces the potential for explosion by removing hydrogen from the vessel headspace to below the LFL and the PVV fans provide forced air purge suction pressure to the UFP vessels headspace. Hydrogen concentrations in the vessel headspace must be maintained below 1 % by volume (25 % of the LFL) during normal operations and less than 4 % by volume (100% of the LFL) under accident conditions leading to a loss of normal or offsite power including NPH events. The air purge provides a volumetric flow rate of at least 100 times the maximum calculated hydrogen generation rate (HGR), which maintains the maximum hydrogen concentration less than 1% of the minimum headspace volume during normal operation.

This requirement on "HOLD" due to Nuclear Safety Engineering's (NSE) indication of an intent to re-perform the Hazards Analysis and Control Selection for pretreatment systems, therefore SSC designations for safety and safety functions are likely to change. [24590-WTP-ATS-MGT-15-0387]

Verification: Verification is expected to be achieved through the following:

Verif. Method	Verif. By	Plan	Notes/Comments
I	ENG	Review the system design to verify the interface with the PVP/PVV system for purging of the hydrogen from the UFP vessel headspace.	*Document in a DVR.*

3.5.3 System Interface Requirements

3.5.3.1 Leaching, Precipitation and Anti-foaming Reagent Chemicals

Requirement: [HOLD] The UFP System shall have the capability to add caustic, strontium nitrate, anti-foaming chemical, and sodium permanganate to the UFP vessels as delineated in Table 3-7. [Section C.7(b)(7)(vi), DOE-BNI Contract, [ID : DE-AC27-01RV14136 Section C ID#1264]][Section 6.1.1, BOD, [ID : DB-ENG-01-001 ID#10299] [ID : DB-ENG-01-001 ID#10301]](A.2, A.8, B.2, B.6, D.2)

Table 3-7 Reagent Addition Capabilities to Vessels

Vessel	Reagent addition
UFP Feed Preparation Vessels	Anti-foam chemical Process condensate 19M Sodium Hydroxide 1M Sodium Permanganate 1M Strontium Nitrate
UFP Feed Vessels	2M Nitric Acid 19M Sodium Hydroxide 2M Sodium Hydroxide Process Condensate 1M Sodium Permanganate
UFP Permeate Vessels	Process Condensate 19M Sodium Hydroxide

Basis Discussion: This capability is needed to facilitate the chemical processes of precipitation, caustic and oxidative leaching, preventing foaming and minimizing the potential for post filtration precipitation of aluminum species, and reducing the volume of permeate that must pass through the ultrafilters.

This requirement is on HOLD due to the SHSVD change in the tank leaching/processing strategy and anti-foam chemical addition requirements. [24590-WTP-ATS-MGT-15-0389]

Verification: Verification is expected to be achieved through the following:

Verif. Method	Verif. By	Plan	Notes/Comments
I	ENG	Review the design of the UFP process system to verify there is the capability to add process condensate and reagents to the UFP vessels as required in Table 3-7.	
D	SU/COM	Demonstrate the systems capability to add specified reagents to the slurry.	

3.5.3.2 Demineralized Water System – Vessel Wash water

Requirement: The UFP vessels shall interface with the DIW to receive demineralized water, with added reagents as needed, to wash and decontaminate the vessels and internals. [Sections 5.2, 14.1, and 20.0, ORD, [ID : WTP-RPT-OP-01-001 ID#1047] [ID : WTP-RPT-OP-01-001 ID#1467] [ID : WTP-RPT-OP-01-001 ID#1721]](F.1, F.1.2)

Basis Discussion: All UFP vessels must be capable of washing and decontamination. [ALARA]

Verification: Verification is expected to be achieved through the following:

Verif. Method	Verif. By	Plan	Notes/Comments
I	ENG	Review the design to verify an interface is provided between the DIW and flush reagent systems with the UFP vessel.	
D	SU/COM	Perform a demonstration to verify the capabilities to wash and decontaminate the UFP vessels with demineralized water.	

3.5.3.3 Pulse Jet Mixer Vent System – Vent PJMs

Requirement: The UFP vessel PJMs shall interface with the PJV system to provide containment and confinement of vent exhausts from PJMs and jet pump pairs (JPPs). [Sections 6.1.1, 12.1.3, and 12.5.8, BOD, [ID : DB-ENG-01-001 ID#10308] [ID : DB-ENG-01-001 ID#11584] [ID : DB-ENG-01-001 ID#11716]](C.3)

Basis Discussion: None.

Verification: Verification is expected to be achieved through the following:

Verif. Method	Verif. By	Plan	Notes/Comments
I	ENG	Review the system design to verify an interface is provided with the PJV system to exhaust air from the PJMs and JPPs.	*Documented in an evaluation/assessment.*

3.5.3.4 Autosampling System – Recirculate UFP Vessel Contents for Sampling

Requirement: The UFP system shall provide interfaces with the ASX system to sample contents of UFP vessels at locations as specified in Table 3-8. [Section 6.1 and 6.7.1, BOD, [ID : DB-ENG-01-001 ID#10292] [ID : DB-ENG-01-001 ID#10417]][Section 14.14, ORD, [ID : RPT-OP-01-001 ID#1545]](E.1, E.1.1, E.1.2)

Table 3-8 UFP Sampling Locations

Sampling point	Vessel Description	Required
Point 4	Ultrafiltration Feed Vessels	Required to establish oxidative leach operating parameters and entrained solids.
Point 5	Ultrafiltration Feed Preparation Vessel	Required during startup/process qualification
Point 6b	UFP Permeate Collection Vessels	Adjustment of Sodium Molarity

Basis Discussion: Authorization Basis compliance, permitting compliance, or for maintaining product quality are formally documented in the *Integrated Sampling and Analysis Requirements Document* (ISARD), 24590-WTP-PL-PR-04-0001. UFP sampling points are listed in Table 3-8.

Verification: Verification is expected to be achieved through the following:

Verif. Method	Verif. By	Plan	Notes/Comments
I	ENG	Review design to confirm sampling connections are provided between UFP vessels with the ASX system.	

3.5.4 Other Technical, Specialty, Requirements, Operations and Maintenance Requirements

3.6 Piping, Jumpers and Inline Components

3.6.1 Mission and Functional Performance (Including States/Modes)

3.6.1.1 Piping Design

3.6.1.1.1 Codes and Standards

Requirement: The UFP piping, inline components, associated welding, and sparger tubing shall be designed in accordance with ASME B 31.3, *Process Piping*, 1996 edition, as tailored in Appendix C, Section C.26 of the SRD. [Appendix C, Section C.26, and Appendix M 2.0, SRD, [ID : SRD-ESH-01-001-02 ID#666] [ID : SRD-ESH-01-001-02 ID#675] [ID : SRD-ESH-01-001-02 ID#1328]][Sections 11.7.1, 16.4.1.3, 16.4.2.4, 16.4.2.7, and 16.4.2.8, BOD, [ID : DB-ENG-01-001 ID#11516] [ID : DB-ENG-01-001 ID#12777] [ID : DB-ENG-01-001 ID#12780] [ID : DB-ENG-01-001 ID#12813] [ID : DB-ENG-01-001 ID#12830] [ID : DB-ENG-01-001 ID#12832] [ID : DB-ENG-01-001 ID#12836]][Sections 4.3.4.4, 4.3.5.4, 4.3.5.5, 4.3.29.4, 4.4.6.4, 4.4.6.5, 4.4.21.5, 4.4.30.4, 4.4.30, and 4.4.35.4, PDSA - PT Facility, [ID : WTP-PSAR-ESH-01-002-02 ID#14008] [ID : WTP-PSAR-ESH-01-002-02 ID#14031] [ID : WTP-PSAR-ESH-01-002-02 ID#14310] [ID : WTP-PSAR-ESH-01-002-02 ID#14248] [ID : WTP-PSAR-ESH-01-002-02 ID#14313] [ID : WTP-PSAR-ESH-01-002-02

ID#14470] [ID : WTP-PSAR-ESH-01-002-02 ID#14598] [ID : WTP-PSAR-ESH-01-002-02 ID#14602] [ID : WTP-PSAR-ESH-01-002-02 ID#14668]][Section 14.10.1.3, BOD, [ID : DB-ENG-01-001 ID#12175]]

Basis Discussion: Although the UFP system has non-safety portions of piping, ASME B31.3, *Process Piping*, 1996 edition, as tailored in Appendix C, Section C.26, of the Safety Requirements Document is used in all B31.3 pipe for design consistency.

Pipe, flanges, and valves are in accordance with the long stock code descriptions listed in applicable pipe class specifications used for the UFP system. Each pipe class sheet lists the design code used for the specific pipe class specification. Pipe, fittings, flanges, and valves used are in accordance with the design code listed on the specific pipe class specification. Specific numbered in-line components provided by other engineering disciplines are in accordance with the design code requirements listed in the applicable engineering specification for the specific component.

Verification: Verification is expected to be achieved through the following:

Verif. Method	Verif. By	Plan	Notes/Comments
A	ENG/SUP	Perform an analysis of the piping design in accordance with ASME B31.3, 1996 edition, as tailored in Appendix C, Section C.26, of the SRD.	
I	ENG	Review of design to verify the results conform to the analysis.	*Documented in an assessment/evaluation that may be performed using a sampling basis or documented in RVM.*

3.6.1.1.2 Fully Welded Piping

Requirement: All-welded construction shall be designed for, 1) Non-maintainable piping (including in-cell process and hard-to-reach piping), and 2) maintainable piping, including jumpers, that contains toxic or hazardous waste within facility buildings. [Sections 11.7.4, and 16.4.1.1, BOD, [ID : DB-ENG-01-001 ID#11534] [ID : DB-ENG-01-001 ID#12747]][Section 8.1.4.2, ORD, [ID : RPT-OP-01-001 ID#1159]]

Basis Discussion: Jumpers are designed with connectors, and as such, the connectors are an exception to the all-welded requirement. [ALARA]

Verification: Verification is expected to be achieved through the following:

Verif. Method	Verif. By	Plan	Notes/Comments
I	ENG	The system design is inspected for fully welded piping.	*Documented in an evaluation/assessment. (although not safety, hard-to-reach piping is included).*

3.6.1.1.3 Process Piping Drain and Vent Capabilities

Requirement: UFP system process piping shall have sufficient high point vents, vacuum breakers and low point drains to ensure all piping can be drained for maintenance and decommissioning. This piping shall be sloped to drains/vessels as necessary to ensure the fluids and solids can be flushed and drained from the piping. Level piping for a short distance through wall penetrations, at connections to equipment, and at jumpers is acceptable. [Sections 7.1, 14.1, 14.3, and 20.0, ORD, [ID : RPT-OP-01-001 ID#1105] [ID : RPT-OP-01-001 ID#1103] [ID : RPT-OP-01-001 ID#1480] [ID : WTP-RPT-OP-01-001 ID#1477] [ID : RPT-OP-01-001 ID#1725] [ID: WTP-RPT-OP-01-001 ID#1730]]

Basis Discussion: The piping provisions for draining and/or pumping fluid reduces risk of plugging and minimizes contamination levels during equipment maintenance and/or replacement. For additional details on pipe sloping, see 24590-WTP-GPG-M-027, *Recommended Slopes for Piping System* and 24590-WTP-M6-50-00008, *P&ID Symbols and Legend Sheet 8 of 8.* [ALARA]

Verification: Verification is expected to be achieved through the following:

Verif. Method	Verif. By	Plan	Notes/Comments
I	ENG	Review the piping design (i.e., piping and instrumentation diagrams [P&ID]) to confirm flushing capabilities and that the piping is designed to drain with no traps or pockets.	*Documented in an assessment/evaluation.*

3.6.2 Nuclear Safety, ALARA, Environmental, and Other Regulatory Requirements

3.6.2.1 Process Equipment Isolation Strategies

Requirement: Isolation strategies shall be included in the design to allow for removal and replacement of plant items required during normal operations. [Section 11.5.1, BOD, [ID : DB-ENG-01-001 ID#11459]]

Basis Discussion: This applies to SSCs with less than 40 year design life. [ALARA]

Verification: Verification is expected to be achieved through the following:

Verif. Method	Verif. By	Plan	Notes/Comments
I	ENG	Review the piping design to confirm isolation capabilities of removable and replaceable UFP components.	

3.6.2.2 Process Transfer Line Flush Capability

Requirement: The UFP piping system shall have provisions for flushing to unplug process piping, inline components, vapor handling vessels, exhaust duct systems, seal pots, and seal loops. [Section and 14.3, ORD, [ID : WTP-RPT-OP-01-001 ID#1478]](F.1, F.1.1)

Basis Discussion: The UFP process piping is flushed to remove waste from the lines to prevent plugging and the accumulation of waste that could generate hydrogen (Sections 1.4, 4.5.1, *Minimum Flow Velocity for Slurry Lines*). The minimum flush velocity of 6 fps was determined in CCN 241253, *Response to Defense Nuclear*

Facilities Safety Board (DNFSB) Staff Issue Report Regarding Plugging of Process Lines, Pretreatment Facility, Waste Treatment Plant, Hanford Site based on the test data. [ALARA]

Verification: Verification is expected to be achieved through the following:

Verif. Method	Verif. By	Plan	Notes/Comments
I	ENG	Review of the system design for the interface with the DIW system to provide the safety DIW flushing.	

3.6.2.3 UFP Filtration Loop Purge

Requirement: [HOLD] The UFP filtration loop purge shall include the following design features:

- The purge system shall provide an automatic purge function upon loss of filtration flow (after a time delay to prevent spurious trips).
- The UFP heat exchanger shell thickness shall be increased to prevent premature failure.
- UFP ultrafilter loop piping and components (valves exchangers, ultrafilters, pumps, etc.) shall be made of high nickel alloy stainless steel that will not fragment when subject to internal hydrogen explosions.
- The purge system shall provide fail open (FO) purge valves and fail closed (FC) isolation valves on the permeate side of the ultrafilters and those subsequent downstream valves which would prevent a successful power flush or blow out.
- The purge system shall provide, as required, redundant air purge to the black cell and with redundant isolation valves on the return line.
- The system shall have redundant air supplies - two independent air supplies in separate fire zones in the C3 area and two independent valves in the air supply lines to the hot cell.
- Purge lines shall be pressurized to the hot cell valve to prevent contamination from reaching the C3 area.
- The wash line valve on the suction side of a pump shall fail closed (FC) to protect the facility worker.

[Section 7.4.1.2, BOD, [ID : DB-ENG-01-001 ID#10639]][Section 4.3.4.1, 4.3.4.5, 4.4.35, 4.4.36.2, 4.4.41.3, and Table 4A-3, PDSA - PT Facility, [ID : WTP-PSAR-ESH-01-002-02 ID#13994] [ID : WTP-PSAR-ESH-01-002-02 ID#14012] [ID : WTP-PSAR-ESH-01-002-02 ID#14655] [ID : WTP-PSAR-ESH-01-002-02 ID#14681] [ID : WTP-PSAR-ESH-01-002-02 ID#15198] [ID : WTP-PSAR-ESH-01-002-02 ID#16490][[ID : WTP-PSAR-ESH-01-002-02 ID#16524]](C.2, F.1.1)

Basis Discussion: These are credited design features for control of hydrogen in the PT Facility process and utility pipe segments and in the ancillary vessels. The design features prevent accumulation of hydrogen or mitigate the consequences of an explosion to acceptable, minimal, levels without need of active controls or operator actions.

This requirement on "HOLD" due to Nuclear Safety Engineering's (NSE) indication of an intent to re-perform the Hazards Analysis and Control Selection for pretreatment systems, therefore SSC designations for safety and safety functions are likely to change. [24590-WTP-ATS-MGT-15-0387]

Verification: Verification is expected to be achieved through the following:

Verif. Method	Verif. By	Plan	Notes/Comments
I	ENG	Review the design of the UFP filtration loop to verify the capabilities of the requirement are included in the design.	

3.6.3 System Interface Requirements

3.6.4 Other Technical, Specialty, Operations and Maintenance Requirements

3.6.4.1 Process Valve Actuators Speed Limiter

Requirement: Design of automatic valve operator closure time shall be sufficiently slow to prevent damage from water hammer. [Section 14.4, ORD, [ID : WTP-RPT-OP-01-001 ID#1489]][Section 11.7.4, BOD, [ID : DB-ENG-01-001 ID#11532]]

Basis Discussion: This requirement applies for valves in the UFP processes or its utility services where "water hammer" can be a phenomenon. Some examples of these are water utility service cooling water lines to the heat exchangers and cooling jackets. Valve stroke time is adjustable after installation. The actual stroke time will need to be specified and made part of valve specifications and/or datasheets.

Verification: Verification is expected to be achieved through the following:

Verif. Method	Verif. By	Plan	Notes/Comments
A	ENG	Perform a system analysis to determine which automatic valves may induce water hammer when closed and determine minimum valve actuator closure times to preclude potential water hammer.	
I	ENG	Review the design to verify slow closing actuators are specified for automatic valves at risk of water hammer and what closure times exceed the minimum or are adjustable above the minimum.	*Evaluate with startup (SU) and commissioning (COM) and document in an evaluation/assessment.*
T	SU/COM	Demonstrate the valve actuator speed meets the requirement as documented in the evaluation/assessment.	

3.6.4.2 Mechanical Cleanout Ports

Requirement: Mechanical cleanout (clean out ports) provisions shall be provided for high risk process piping to unplug systems where flushing has not been successful. [Section 11.4.1, BOD, [ID: DB-ENG-01-001 ID#11431]][Section 14.3, ORD, [ID : RPT-OP-01-001 ID#1466]]

Basis Discussion: Appendix A, Table 1 of the design guide *Recommended Slopes for Piping Systems*, 24590-WTP-GPG-M-027, contains the fluid codes which result in high risk piping. [ALARA]

Verification: Verification is expected to be achieved through the following:

Verif. Method	Verif. By	Plan	Notes/Comments
I	ENG	Review design to verify mechanical cleanout ports are available.	

3.7 Ultrafilters

3.7.1 Mission and Functional Performance (Including States/Modes)

3.7.1.1 Ultrafilter Crossflow Configuration

Requirement: The ultrafilters will be of crossflow configuration. [Section 6.1.1, BOD, [ID : DB-ENG-01-001 ID#10299]](B.7)

Basis Discussion: Ultrafiltration is the technology that was selected to perform solids-liquids separations because of its proven record of reliability.

Verification: Verification is expected to be achieved through the following:

Verif. Method	Verif. By	Plan	Notes/Comments
I	ENG	Review the design to verify ultrafilter crossflow configuration.	

3.7.1.2 Ultrafilter Sizing

Requirement: [HOLD] The ultrafilter surface area for each train is to be approximately 1,500 square feet and volumes as specified in Table 3-9. [Section C.7(b)(7)(i), DOE-BNI Contract, [ID : DE-AC27-01RV14136 Section C ID#1259]][Section III.10.E.1.b, DWP, [ID : WA7890008967 WTP ID#309]]

Table 3-9 Ultrafilter Capacities

Vessel	Maximum Capacity (gal)
UFP-FILT-00001A/B UFP-FILT-00002A/B UFP-FILT-00003A/B	474
UFP-FILT-00004A/B UFP-FILT-00005A/B	380

Basis Discussion: An alternative design may be used if greater average filter flux rates are demonstrated.

This requirement is on "HOLD" due to the development of a SHSVD will affect the ultrafilter capacity and filter rates. [24590-WTP-ATS-MGT-15-0389]

Verification: Verification is expected to be achieved through the following:

Verif. Method	Verif. By	Plan	Notes/Comments
I	ENG	The system design is inspected to verify each ultrafilter train meets the requirement.	

3.7.1.3 Ultrafilter Operating Temperatures

Requirement: The ultrafilters shall be designed with the capability to operate at filtration temperatures of 45°C or higher. [Section C.7(b)(7)(v), DOE-BNI Contract, [ID : DE-AC27-01RV14136 Section C ID#1259]][Section 6.1.1, BOD, [ID : DB-ENG-01-001 ID#10299]](B.4, B.7)

Basis Discussion: A filtration operating temperature of 45 °C was selected in order to avoid post-filtration precipitation and still support filter-flux rates that will satisfy production requirements. The ultrafilter assembly design must include sufficient tolerances for thermal expansion to operate at temperatures in excess of 45°C.

Verification: Verification is expected to be achieved through the following:

Verif. Method	Verif. By	Plan	Notes/Comments
I	ENG	Review ultrafilter design to verify the capability to operate at or above 45°C.	

3.7.2 Nuclear safety, ALARA, Environmental, and Other Regulatory Requirements

3.7.2.1 UFP Loop Power Flush

Requirement: The ultrafilter process loop shall be designed with a power flush capability to remove accumulated concentrated slurry that remains in the line when flow is stopped. [Section 4.4.41.1, 4.4.41.2 and 4.4.41.3, PDSA – PT Facility, [ID : WTP-PSAR-ESH-01-002-02 ID#14757] [ID : WTP-PSAR-ESH-01-002-02 ID#14759] [ID : WTP-PSAR-ESH-01-002-02 ID#14760] [ID : WTP-PSAR-ESH-01-002-02 ID#14761] [ID : WTP-PSAR-ESH-01-002-02 ID#14767]][Sections 14.3, and 20.0, ORD, [ID : WTP-RPT-OP-01-001 ID#1477] [ID : WTP-RPT-OP-01-001 ID#1730]](F.1, F.1.1, F.1.3)

Basis Discussion: Functions of the UFP power flush system are as follows:

- Reclaim solids from the filtration loop, returning the reclaimed solids to the UFP feed vessel
- Prevent line plugging when flow in the piping stops
- Prevent hydrogen build-up in the piping and filtration loop components

Verification: Verification is expected to be achieved through the following:

Verif. Method	Verif. By	Plan	Notes/Comments
I	ENG	Review the ultrafilter design to verify inclusion of power flush capability.	*Document in a DVR.*
D	SU/COM	Perform a demonstration of the power flush system capability to remove accumulated concentrated slurry from the ultrafilter process loop.	

3.7.3 System Interface Requirements

3.7.3.1 Ultrafilter Acid Cleaning

Requirement: The UFP system shall have the capability to perform ultrafilter nitric acid flushing, neutralization of flush medium, and removal of waste products generated by the acid flush of the UFP system ultrafilters. [Section 6.11.1, BOD, [ID : DB-ENG-01-001 ID#10479]](F.1, F.1.3)

Basis Discussion: The ultrafilters are anticipated to be acid cleaned after completing every fifth batch (assumed in G2 model) to remove scaling and filter plugging. Acid cleaning involves two, 5280-gallon 2 molar nitric acid cleaning cycles, two power flushes, draining the acid to PWD, and neutralization of the diluted vessel heel with

5000 gallons of 0.3 molar sodium hydroxide. The time provided in the model to perform these activities is 7.5 hrs plus time for liquid transfers as calculated in the model. Sodium hydroxide is added in PWD-VSL-00015/16 to neutralize the acid cleaning solution.

Verification: Verification is expected to be achieved through the following:

Verif. Method	Verif. By	Plan	Notes/Comments
I	ENG	Review the ultrafilter design to verify inclusion of ultrafilter nitric acid flush, neutralization flush and removal of waste products capabilities.	

3.7.4 Other Technical, Specialty, Operations and Maintenance Requirements

3.8 Pulse Jet Mixers, Spargers, Reverse Flow Diverters and Jet Pump Pairs

3.8.1 Mission and Functional Performance (Including States/Modes)

3.8.1.1 Codes and Standards

Requirement: The PJMs, RFDs JPPs and air spargers inside the vessels are designed and fabricated in accordance with ASME Boiler and Pressure Vessel Code, Section VIII, Division 1. [Section 4.3.4.4, PDSA - PT Facility, [ID : WTP-PSAR-ESH-01-002-02 ID#14007]][Safety Criterion 4.2-2, Appendix L, and Appendix M 2.0, SRD, [ID : SRD-ESH-01-001-02 ID#1272] [ID : SRD-ESH-01-001-02 ID#1254] [ID : SRD-ESH-01-001-02 ID#1255] [ID : SRD-ESH-01-001-02 ID#1328]][Sections 11.7.1, and 16.4.2.4, BOD, [ID : DB-ENG-01-001 ID#11510] [ID : DB-ENG-01-001 ID#12812]]

Basis Discussion: None.

Verification: Verification is expected to be achieved through the following:

Verif. Method	Verif. By	Plan	Notes/Comments
I	ENG	Review the design, including analysis, to verify the design of PJMs, RFDs, JPPs, air spargers and supports is per ASME Boiler and Pressure Vessel Code, Section VIII, Division 1.	*Document in a DVR.*

3.8.1.2 UFP Vessel Mixing.

Requirement: [HOLD] The UFP system design shall have the capability to mix vessel contents during receiving, processing, leaching, precipitation, sampling, storing, concentrating, separation and transferring to meet the following functions.

- Release hydrogen gas from the non-Newtonian vessel slurries.
- Maintain a uniform temperature distribution and prevent vessel bump (gases, consisting mostly of water vapor, suddenly emitted from the waste and causing vessel headspace pressurization).
- Re-suspend settled solids and maintain suspension of solids within the vessels (reduces heel accumulation, and risk of line plugging).
- Sufficiently mix the contents of the vessels for sampling.

- Provide blending of chemicals and DIW when required for washing, leaching, anti-foaming, dilution water and precipitation.

[Section C.7(b)(7)(ii), DOE-BNI Contract, [ID : DE-AC27-01RV14136 Section C ID#1260]][Section 4.3.4.2, and 4.3.4.3.3, PDSA - PT Facility, [ID : WTP-PSAR-ESH-01-002-02 ID#13979] [ID : WTP-PSAR-ESH-01-002-02 ID#13980] [ID : WTP-PSAR-ESH-01-002-02 ID#13982] [ID : WTP-PSAR-ESH-01-002-02 ID#13983] [ID : WTP-PSAR-ESH-01-002-02 ID#13984] [ID : WTP-PSAR-ESH-01-002-02 ID#14001] [ID : WTP-PSAR-ESH-01-002-02 ID#14002] [ID : WTP-PSAR-ESH-01-002-02 ID#14003] [ID : WTP-PSAR-ESH-01-002-02 ID#14004]][Section 6.7.3, BOD, [ID : DB-ENG-01-001 ID#10425] [ID : DB-ENG-01-001 ID#10424]][Section 14.14, ORD, [ID : RPT-OP-01-001 ID#1545]](A.3, B.3)

Basis Discussion: Waste agitation releases trapped hydrogen gases. In non-Newtonian vessels, mixing is performed using the SC PJMs in conjunction with the air sparging (in intermittent non-idle flow mode). The suspended solids mixing requirements include starting SC air-operated PJM mixing upon loss of agitation, provided that liquid level is sufficiently high. The vessel level detectors (bubblers) provide the vessel level and stored-liquid-density information necessary for the PJMs to properly mix the vessel contents. The level detectors shall be provided with periodic water flush to prevent plugging.

The UFP-VSL-00002A/B vessels are designated as non-Newtonian and require mixing and purging using a combination of subsystems. To ensure hydrogen is kept below the LFL, mixing is accomplished using a set of SC pulse jet mixers (PJMs) in conjunction with SC air spargers. Hydrogen purge is accomplished using the air spargers, which bubble air through the waste. The sparger air then dilutes the hydrogen in the vessel headspace to concentrations below the LFL.

The level monitors are used to determine which air spargers will be activated at high air flow rates. There are two elevations for the sparger nozzles, one located near the bottom of the vessel and the other located above the PJMs. When the waste level is above the PJMs, all high flow spargers are used. However, in the case of low waste level (e.g., below the top of the PJMs and above the PJM discharge nozzles), only the lower spargers (operating at high flow) are used. A low flow rate is provided for all spargers not operating at high flow rates. The low flow reduces the risk of sparger tube plugging, and provides the purge air to dilute the vessels' head spaces. To support solids mixing, non-Newtonian slurry rheology must remain within specified parameters.

This requirement is on HOLD pending the review by the mixing technology technical team (T4) and may be removed pending the technical team result. [24590-WTP-ATS-MGT-15-0388]

Verification: Verification is expected to be achieved through the following:

Verif. Method	Verif. By	Plan	Notes/Comments
A/T	ENG	Perform an analysis and/or testing to confirm the design is capable of mixing the waste to release hydrogen and maintain vessel contents below the LFL.	
A/T	ENG	Perform an analysis and/or testing to confirm the PJM/sparger capacities necessary to maintain a sufficiently uniform temperature distribution to support chemical processes.	
A/T	ENG	Perform an analysis and/or testing to confirm the PJM/sparger capacities necessary to maintain suspension of solids in the non-Newtonian vessels.	
A/T	ENG	Perform an analysis and/or testing to confirm the PJM/sparger capacities necessary to mix chemical reagents.	

Verif. Method	Verif. By	Plan	Notes/Comments
A/T	ENG	Perform an analysis and/or testing to confirm sufficient mixing of vessel materials to support representative sampling.	
I	ENG	Verify that the mixing capability is incorporated into the design and in conformance with the results of the analysis/testing.	

3.8.2 Nuclear Safety, ALARA, Environmental and Other Regulatory Requirements

3.8.2.1 Redundant Hydrogen Mitigation and Mixing Components

Requirement: The UFP hydrogen mitigation and mixing components shall be redundant including air distribution piping, associated inline components, and PJM controllers independent of the normal PJM mixing system. Installed jet pump pair and PJM spares shall be included in design. [Sections 4.3.4.3.1, 4.3.4.3.3, PDSA – PT Facility, [ID : WTP-PSAR-ESH-01-002-02 ID#13994] [ID: WTP-PSAR-ESH-01-002-02 ID#14002]][Appendix M 2.0, SRD, [ID: SRD-ESH-01-001-02 ID#1328]]

Basis Discussion: In general, process systems and equipment that could fail during operations are designed for safe recovery, replacement, or redundancy. Redundant controllers and components also provide means for prevention of multiple PJM overblows (Section 3.12.2.1.3).

Verification: Verification is expected to be achieved through the following:

Verif. Method	Verif. By	Plan	Notes/Comments
I	ENG	Review of the design to ensure hydrogen mitigation and mixing components include redundant design and installed jet pump pair and PJM spares are incorporated into design.	

3.8.2.2 Plant Service Air –Sparger and PJM Operations

Requirement: [HOLD] The UFP vessel spargers and PJMs shall interface with the PSA system to provide vessel headspace purging and mixing. Volumetric purge air flow rate via spargers shall be a continuous idle air purge of at least 100 times the maximum calculated hydrogen generation rate. [Sections 4.3.4.3.1, 4.3.4.3.2, and 4.3.4.3.3, PDSA - PT Facility, [ID : WTP-PSAR-ESH-01-002-02 ID#13995] [ID : WTP-PSAR-ESH-01-002-02 ID#14004] [ID : WTP-PSAR-ESH-01-002-02 ID#13993] [ID : WTP-PSAR-ESH-01-002-02 ID#13997] [ID : WTP-PSAR-ESH-01-002-02 ID#13999] [ID : WTP-PSAR-ESH-01-002-02 ID#14001] [ID : WTP-PSAR-ESH-01-002-02 ID#14002] [ID : WTP-PSAR-ESH-01-002-02 ID#14003] [ID : WTP-PSAR-ESH-01-002-02 ID#14004]][Section 6.1, BOD, [ID : DB-ENG-01-001 ID#10291]](C.3, H.1, H.2, H.3)

Basis Discussion: The normal air purge, through the spargers, provides a volumetric flow rate of at least 100 times the maximum calculated hydrogen generation rate (HGR), which maintains the maximum hydrogen concentration less than 1% of the minimum headspace volume during normal operation. All UFP vessels are equipped with PJMs that interface with the PSA.

This requirement on "HOLD" due to Nuclear Safety Engineering's (NSE) indication of an intent to re-perform the Hazards Analysis and Control Selection for pretreatment systems, therefore SSC designations for safety and safety functions are likely to change. [24590-WTP-ATS-MGT-15-0387]

Verification: Verification is expected to be achieved through the following:

Verif. Method	Verif. By	Plan	Notes/Comments
A	ENG	Perform an analysis to confirm the design is capable of providing the plant air sufficiently of the required volumetric flow rate..	*Document in a DVR.*
I	ENG	Review design to verify capacity to provide air to spargers in non-Newtonian vessels at a rate in excess of 100 times the maximum calculated HGR.	*Document in a DVR.*
D	SU/COM	Perform integrated system demonstration to confirm the PSA provides air purge supply at the design capacity.	

3.8.3 System Interface Requirements

3.8.4 Other Technical, Specialty, Operations and Maintenance Requirements

3.8.4.1 Sparger Flushing and Draining

Requirement: [**HOLD**] The UFP feed vessel sparger design shall include provisions to be flushable and fully drainable. [Section 11.4.1, BOD [ID : DB-ENG-01-001 ID#11431]](F.1)

Basis Discussion: DIW to the sparger lines into the UFP feed vessels reduces the risk of plugging of the sparger lines. [ALARA]

This requirement is on "HOLD" due to the SHSVD may result in use of spargers in UFP feed vessels for purge air and mixing being eliminated. [24590-WTP-ATS-MGT-15-0389]

Verification: Verification is expected to be achieved through the following:

Verif. Method	Verif. By	Plan	Notes/Comments
I	ENG	Review the system design for capability to flush and drain the spargers.	*Document in a DVR.*

3.9 Pumps

3.9.1 Mission and Functional / Performance Requirements (Including States/Modes)

3.9.1.1 Codes and Standards

Requirement: The centrifugal pumps used in the UFP system pumps shall be designed in accordance with API and ASME pump standards identified in SRD Safety Criterion 4.2-2, as tailored by SRD, Appendix C. [Safety Criterion 4.2-2, Appendix C, SRD, [ID : SRD-ESH-01-001-02 ID#41] [ID: SRD-ESH-01-001-02 ID#738] [ID: SRD-ESH-01-001-02 ID#739]][Sections 11.7.1, BOD, [ID : DB-ENG-01-001 ID#11517]]

Basis Discussion: None.

Verification: Verification is expected to be achieved through the following:

Verif. Method	Verif. By	Plan	Notes/Comments
I	ENG	Review design to verify centrifugal pumps conform to the required standards.	

3.9.2 Nuclear Safety, ALARA, Environmental, and Other Regulatory Requirements

3.9.2.1 Pump Seal Features

Requirement: Upon failure, pump seals shall be designed to contain the pump medium and prevent escape of the liquids or gases to areas that will expose personnel or to the environment. [Section 14.1, ORD, [ID : RPT-OP-01-001 ID#1468]][Section 7.4.1.2, BOD, [ID : DB-ENG-01-001 ID#10637]]

Basis Discussion: The spread of contaminants (liquids or gases) to personnel or to the environment is minimized by using pump seals or other design features. [ALARA]

Verification: Verification is expected to be achieved through the following:

Verif. Method	Verif. By	Plan	Notes/Comments
I	ENG	Review design and verify pump seals will not fail in a way that releases liquids or gases that would expose personnel or be released to the environment.	

3.9.3 System Interface Requirements

3.9.4 Other Technical, Specialty, Operations and Maintenance Requirements

3.10 Bulges

3.10.1 Mission and Functional / Performance Requirements (Including States/Modes)

3.10.1.1 Bulge Enclosures Codes and Standards

Requirement: The bulge enclosure liquid confinement features (i.e., the shell), structural frames and mounting components shall be designed and constructed in accordance with either AISC M016, or a more stringent standard such as ANSI/AISC N690. [Section 4.4.9.4.3, PDSA - PT Facility, [ID : WTP-PSAR-ESH-01-002-02 ID#14333]]

Basis Discussion: None.

Verification: Verification is expected to be achieved through the following:

Verif. Method	Verif. By	Plan	Notes/Comments
I	ENG	Review the design to verify the UFP bulge enclosures are designed and constructed in accordance with the standards in this requirement.	

3.10.2 Nuclear Safety, ALARA, Environmental, and Other Regulatory Requirements

3.10.2.1 Sizing and Slope of Bulge Drains and Ventilation Piping

Requirement: The process bulge drains and ventilation piping shall be sized and sloped to provide an unobstructed pathway for liquid and aerosol releases from the bulge enclosure to C5 areas. [Section 4.4.9.3, PDSA - PT Facility, [ID : WTP-PSAR-ESH-01-002-02 ID#14324]][Section 11.3.2.7, and 11.7.4, BOD, [ID : DB-ENG-01-001 ID#11406] [ID : DB-ENG-01-001 ID#11533]]

Basis Discussion: [ALARA]

Verification: Verification is expected to be achieved through the following:

Verif. Method	Verif. By	Plan	Notes/Comments
I	ENG	Review the piping design (i.e., P&ID and isometric drawings) to confirm the piping is designed to drain with no traps or pockets.	

3.10.2.2 Location of Maintainable Equipment

Requirement: UFP small equipment requiring maintenance (for example, valves, pumps, and instruments) that contains radioactive process fluids (gaseous and liquid) shall be located in stainless steel bulges, located in process enclosures or have all-welded construction with double sealed valves. [Sections 11.3.2 and 11.3.2.7, BOD, [ID : DB-ENG-01-001 ID#11389] [ID : DB-ENG-01-001 ID#11406]][Section 10.4, ORD, [ID : RPT-OP-01-001 ID#1238] [ID : RPT-OP-01-001 ID#1236]]

Basis Discussion: [ALARA]

Verification: Verification is expected to be achieved through the following:

Verif. Method	Verif. By	Plan	Notes/Comments
I	ENG	Review the design to verify the valves, pumps and instruments exposed to radioactive process fluid and require hands-on maintenance are located in bulges or have all welded construction with double sealed valves.	

3.10.3 System Interface Requirements

3.10.4 Other Technical, Specialty, Operations and Maintenance Requirements

3.11 Heat Exchangers

3.11.1 Mission and Functional / Performance Requirements (Including States/Modes)

3.11.1.1 Heat Exchangers Codes and Standards

Requirement: The UFP heat exchanger components shall be designed and constructed in accordance with *ASME Boiler and Pressure Vessel Code,* Section VIII. Material will be specified in accordance with ASME Boiler and Pressure Vessel Code, Section II. This standard covers the components, including the vessel nozzles, out to the first circumferential weld or flange. [Safety Criterion 4.2-2, SRD, [ID : SRD-ESH-01-001-02 ID#41]][Section 11.7.1, BOD, [ID : DB-ENG-01-001 ID#11515]][Section 4.4.15.4 and 4.4.15.5 PDSA - PT Facility, [ID : WTP-PSAR-ESH-01-002-02 ID#14378] [ID : WTP-PSAR-ESH-01-002-02 ID#14381]]

Basis Discussion: None.

Verification: Verification is expected to be achieved through the following:

Verif. Method	Verif. By	Plan	Notes/Comments
A	ENG	Analysis of the UFP heat exchanger design is prepared in accordance with ASME Section VIII.	*Documented in RVM.*
I	ENG	Review the design to verify the design of UFP heat exchangers is per ASME Boiler and Pressure Vessel Code, Section VIII, and the material specified is accordance with Section II.	

3.11.1.2 Feed Preparation Heat Exchangers Size

Requirement: [HOLD] The UFP feed preparation vessels heat exchangers in combination with the vessel cooling jackets, shall be sized to meet a feed cooling rate of 90°C to 25°C in 7 hours. [Section 6.1.1 and 6.3.1, BOD, [ID : DB-ENG-01-001 ID#10303] [ID : DB-ENG-01-001 ID#10336]](A.4, A.7)

Basis Discussion: This criterion is a G2 modeling assumption that provides reasonable assurance of satisfying PTF throughput requirements.

This requirement is on "HOLD" due to the SHSVD is expected to change the UFP vessels' components used for heating and cooling requirements. [24590-WTP-ATS-MGT-15-0389]

Verification: Verification is expected to be achieved through the following:

Verif. Method	Verif. By	Plan	Notes/Comments
A	ENG/ SUP	Perform an analysis to determine the size of the UFP heat exchangers at the cooling rate of 90°C to 25°C in 7 hours..	
I	ENG	Review the design to verify required conformance with the analysis.	
T	SU/COM	Perform a test to verify the cooling rate of the feed preparation heat exchangers.	

3.11.1.3 Feed Vessel Heat Exchangers Cooling Rate

Requirement: [HOLD] The UFP feed vessels heat exchangers in combination with the cooling jackets, shall be sized to meet a feed cooling rate of 90°C to 25°C in 32 hours and 85°C to 45°C in 22 hours when leaching in the UFP feed vessels. [Section 6.3.1, BOD, [ID : DB-ENG-01-001 ID#10336]](B.9)

Basis Discussion: This criterion is a G2 modeling assumption that provides reasonable assurance of satisfying PTF throughput requirements.

This requirement is on "HOLD" due to the SHSVD is expected to change the UFP vessels' components used for heating and cooling requirements. [24590-WTP-ATS-MGT-15-0389]

Verification: Verification is expected to be achieved through the following:

Verif. Method	Verif. By	Plan	Notes/Comments
A	ENG/SUP	Perform an analysis to determine the sizing and heat transfer capacity to accomplish the specified cooling requirements.	
I	ENG	Review the feed heat exchanger design to verify conformance to the results of the analysis.	
T	SU/COM	Perform a test to verify the cooling rate of the feed vessel heat exchangers.	

3.11.2 Nuclear Safety, ALARA, Environmental and Other Regulatory Requirements

3.11.3 System Interface Requirements

3.11.4 Other Technical, Specialty, Operations and Maintenance Requirements

3.12 Monitoring and Controls Requirements

3.12.1 Mission and Functional/Performance Requirements

3.12.1.1 Bubblers – Level and Liquid Density Detection

Requirement: The UFP vessels shall include bubblers for level and liquid density detection with remote indication. Pressure differential transmitters used as part of bubbler level/density measurements will be located a minimum of one barometric head above the maximum liquid surfaces. [Section 4.3.4.3.3, PDSA - PT Facility, [ID : WTP-PSAR-ESH-01-002-02 ID#14002]][Section 9.4.5.2, 14.10.1.1, BOD, [ID : DB-ENG-01-001 ID#10985] [ID : DB-ENG-01-001 ID#12149] [ID : DB-ENG-01-001 ID#12151]][Section 7.1, ORD, [ID : RPT-OP-01-001 ID#1110]][Section III.10.E.5.b, DWP, [ID : WA7890008967 WTP ID#335]](G.2.1)

Basis Discussion: Level and density is monitored to provide input to PJM and sparger controls. Sparger control is discussed in Section 3.12.2.1.1.

UFP feed vessels also use level monitoring to prevent overflow of UFP feed fluids to Newtonian vessels. The SC interlock is discussed in Section 3.12.2.1.2.

This level sensing capability is used to determine volume and mass balances during transfer of material between vessels. [ALARA]

Verification: Verification is expected to be achieved through the following:

Verif. Method	Verif. By	Plan	Notes/Comments
I	ENG	Review of the design to verify level/density measurement utilizes bubblers and the associated pressure differential transmitters meet the location requirement.	
D	SU/COM	Perform integrated system test to demonstrate that level monitoring provided (via the PPJ system for safety interlocks and to PCJ for operator monitoring and control in the MCR.)	

3.12.1.2 UFP Feed Preparation Vessel Temperature Control

Requirement: Temperature control of UFP feed preparation vessels shall maintain leaching temperatures between 80°C and 90°C. [Section 6.1.1, BOD, [ID : DB-ENG-01-001 ID#10303]](A.4, G.1)

Basis Discussion: Based on avoidance of caustic stress corrosion cracking in the vessels, 90 °C represents the upper end of the leaching temperature range. These vessels will be equipped with direct steam heating and can receive caustic additions of hydroxide for pH adjustments.

Verification: Verification is expected to be achieved through the following:

Verif. Method	Verif. By	Plan	Notes/Comments
A	ENG	Perform an analysis to determine the necessary steam heating required to maintain the leaching temperatures between 80°C and 90°C at maximum design throughput capacity.	
I	ENG	Review the UFP vessel design to verify conformance to the results of the analysis.	
D	SU/COM	Perform a demonstration to that will prove the capability of the control system to heat and maintain the temperature of the tank as specified in the requirement.	

3.12.1.3 UFP Feed Vessel Temperature Control

Requirement: Temperature control of UFP feed vessels shall be capable of leaching at temperatures between 80°C and 90°C and operate at filtration temperatures of 45°C or higher. [Section C.7(b)(7)(iii) and (V), DOE-BNI Contract, [ID : DE-AC27-01RV14136 Section C ID#1261] [ID : DE-AC27-01RV14136 Section C ID#1263]][Section 6.1.1, and 6.3.1, BOD, [ID : DB-ENG-01-001 ID#10303] [ID : DB-ENG-01-001 ID#10336]](B.4)

Basis Discussion: Based on avoidance of caustic stress corrosion cracking in the vessels, 90 °C represents the upper end of the leaching temperature range. Cycle time may be up to 12 days depending on waste characteristics. Operation at filtration temperature of 45°C or higher increases the filter flux rates and potentially reduces caustic required for leaching.

Verification: Verification is expected to be achieved through the following:

Verif. Method	Verif. By	Plan	Notes/Comments
A	ENG	Perform an analysis to determine the necessary steam heating required to maintain the maximum leaching and filtration temperatures at design capacities throughput.	
I	ENG	Review the UFP vessel design to verify conformance to the results of the analysis.	
T	SU/COM	Perform a demonstration to verify the capability of the control system to heat and maintain the temperature of the tank as specified in the requirement	

3.12.1.4 Permeate Radiation Break-through Piping Layout

Requirement: The permeate collection piping to the permeate vessels shall be designed with radiation monitors that detect radiation breakthrough of permeate in combination with a means to divert permeate to alternate locations or to isolate the permeate discharge. [Section 7.1, ORD, [ID : RPT-OP-01-001 ID#1108]]

Basis Discussion: [ALARA]

Verification: Verification is expected to be achieved through the following:

Verif. Method	Verif. By	Plan	Notes/Comments
I	ENG	Review the design of the UFP permeate to verify the design includes radiation monitors and the capability to divert radiation breakthrough liquids to alternate locations or to isolate permeate.	

3.12.2 Nuclear Safety, ALARA, Environmental and Other Regulatory Requirements

3.12.2.1 Safety Class Interlocks

3.12.2.1.1 Level Detection for Sparger Activation

Requirement: [HOLD] The bubblers shall interface with the PPJ system to ensure proper air sparger mixing is provided. Interlock design shall include provision, upon receiving high air flow rate sparging demands, either the lower air spargers activate alone when the level is below the top of the PJMs and above the PJM nozzles and all air spargers activate when the level is above the PJMs. [Sections 4.3.4.2, and 4.3.4.3.3, PDSA - PT Facility, [ID: WTP-PSAR-ESH-01-002-02 ID#13983] [ID : WTP-PSAR-ESH-01-002-02 ID#14003]](G.2.2)

Basis Discussion: There are two elevations for the sparger nozzles, one located near the bottom of the vessel and the other located above the PJM nozzles. When the waste level is above the PJMs, all spargers are used. However, in the case of low waste level, (e.g., below the top of the PJMs and above the PJM discharge nozzles) only the lower spargers are used. [ALARA]

This requirement is on "HOLD" due to SHSVD, mixing testing and resolution of hydrogen technical concerns may remove the spargers from the UFP system. [24590-WTP-ATS-MGT-15-0387, 15-0388, and 15-0389]

Verification: Verification is expected to be achieved through the following:

Verif. Method	Verif. By	Plan	Notes/Comments
I	ENG	Review the design for the capability to activate the lower air spargers when the level is below the top of the PJMs and above the PJM nozzles and all air spargers activate when the level is above the PJMs.	*Document in a DVR.*
D	SU/COM	Demonstrate the capability to activate the lower air spargers when the level is below the top of the PJMs and above the PJM nozzles and all air spargers activate when the level is above the PJMs.	

3.12.2.1.2 UFP Feed Vessel High Level Safety Interlock

Requirement: [HOLD] Upon detection of a high level setpoint, in any UFP feed vessel, a high level safety interlock shall close the discharge isolation valves on all UFP feed vessels, except the UFP feed vessel that has tripped the interlock. [Sections 4.3.4.2, and 4.3.4.3.3, PDSA - PT Facility, [ID : WTP-PSAR-ESH-01-002-02 ID#13985] [ID : WTP-PSAR-ESH-01-002-02 ID#14001] [ID : WTP-PSAR-ESH-01-002-02 ID#14002] [ID : WTP-PSAR-ESH-01-002-02 ID#14003]][Section 14.10.1.1, BOD, [ID : DB-ENG-01-001 ID#12149] [ID : DB-ENG-01-001 ID#12151]](G.2.1)

Basis Discussion: The level monitors will be interlocked to shut the discharge valves on all UFP feed vessels not experiencing a high level condition. The UFP feed vessels use a two-tier overflow protection strategy. The first tier consists of non-safety level monitors with automatic interlocks for each of the vessels. These interlocks stop all incoming flows to whichever vessel is experiencing the overflow condition. In the event this interlock fails to correct the overfill condition, a second safety interlock will shut the discharge isolation valves on all UFP feed vessels except the vessel that has tripped the interlock. This second interlock is designated as SC. The isolation valve from that particular vessel will remain open to enable lowering the vessel level without disabling the interlock. In this way, all UFP feed vessels would not be automatically isolated simply because one of them has an overflow condition. This provides adequate safety against UFP feed overflows while minimizing the impact on operations at the same time. [ALARA]

This requirement is on "HOLD" due to the SHSVD is expected to result in separate overflow destination for Newtonian and UFP feed vessels. [24590-WTP-ATS-MGT-15-0389]

Verification: Verification is expected to be achieved through the following:

Verif. Method	Verif. By	Plan	Notes/Comments
I	ENG	Review the design for incorporation of the interlock.	*Document in a DVR.*
D	SU/COM	Perform a demonstration to verify the proper response of the UFP feed vessel high level safety interlock.	

3.12.2.1.3 PJM Overblow Interlock

Requirement: [HOLD] The PPJ system shall prevent seismically induced multiple overblow events from occurring in the UFP feed vessels. Upon sensing of low backpressure during the blowdown phase, the PJM experiencing low backpressure shall shutdown. [Section 4.3.29.3, PDSA - PT Facility, [ID : WTP-PSAR-ESH-01-002-02 ID#14244]](G.2.3)

Basis Discussion: PJM control during and after seismic events prevents challenge of vessel internals by limiting overblow. [ALARA]

This requirement is on "HOLD" due to Nuclear Safety Engineering's (NSE) indication of an intent to re-perform the Hazards Analysis and Control Selection for pretreatment systems, therefore SSC designations for safety and safety functions are likely to change. [24590-WTP-ATS-MGT-15-0387]

Verification: Verification is expected to be achieved through the following:

Verif. Method	Verif. By	Plan	Notes/Comments
A/T	ENG	Perform analysis or testing to establish control setpoint(s) that will prevent multiple overblows.	
I	ENG	Review the design for incorporation of the interlock.	*Document in a DVR.*
T	SU/COM	Test the capability to shut down PJMs upon detection of low backpressure setpoint **(TBD)** during blowdown phase.	

3.12.2.2 Safety Significant Interlocks

3.12.2.2.1 Pulse Pot Bulge interlocks

Requirement: [HOLD] The Pulse pot bulge utility supply isolation valves shall be interlocked to perform the following functions:

- Hot cell plant service air and reagent supply valves to an ultrafiltration pulse pot cannot be simultaneously opened.
- Hot cell plant service air supply valves to an ultrafiltration pulse pot cannot be opened and shall be automatically closed on low plant service air pressure.
- Hot cell reagent supply valves to an ultrafiltration pulse pot cannot be opened if the ultrafiltration pulse pot void valve is closed.

[Section 4.4.21, PDSA – PT Facility, [ID : WTP-PSAR-ESH-01-002-02 ID#14457] [ID : WTP-PSAR-ESH-01-002-02 ID#14461]][Section 7.1, ORD, 8-3578 [ID : RPT-OP-01-001 ID#1101]](G.2.4)

Basis Discussion: The ultrafiltration pulse pots' reagent bulges (one for each ultrafiltration feed vessel) have a pressurized air supply to each ultrafiltration pulse post and a reagent supply pipe for cleaning each of the six ultrafilter pulse pots. Valve misalignment during reagents addition or loss of air pressure could lead to a backflow of radioactive liquid waste to the C3 areas.

This requirement is on "HOLD" due to Nuclear Safety Engineering's (NSE) indication of an intent to re-perform the Hazards Analysis and Control Selection for pretreatment systems, therefore SSC designations for safety and safety functions are likely to change. [24590-WTP-ATS-MGT-15-0387]

Verification: Verification is expected to be achieved through the following:

Verif. Method	Verif. By	Plan	Notes/Comments
I	ENG	Review the design for incorporation of the interlock.	*Document in a DVR*

Verif. Method	Verif. By	Plan	Notes/Comments
T	SU/COM	Perform a test the control logic to verify proper utility supply isolation valves and interlocks perform the required safety functions. Low air pressure setpoint.	

3.12.2.2.2 No Simultaneous Opening of Drain and Suction Valves

Requirement: [HOLD] The design shall include controls that will prevent transfer line drain valve from being opened at the same time the transfer line or suction valves from the UFP vessels are open. [Section 4.4.30.2 and 4.4.30.3, PDSA - PT Facility, [ID : WTP-PSAR-ESH-01-002-02 ID#14593] [ID : WTP-PSAR-ESH-01-002-02 ID#14595]](G.2.5)

Basis Discussion: Non-Newtonian waste feed is transferred between Ultrafiltration Feed, HLW Feed Blend Vessel, or HLW Lag Storage Vessels within the PT facility. Following the transfers the affected transfer lines are flushed and drained into either the Ultimate Overflow Vessel or the HLW Effluent Transfer Vessel. Since the PWD vessels are not equipped to adequately mix non-Newtonian material, misrouting such material into the vessel(s) could result in accumulation of hydrogen in the vessel.

This requirement is on "HOLD" due to Nuclear Safety Engineering's (NSE) indication of an intent to re-perform the Hazards Analysis and Control Selection for pretreatment systems, therefore SSC designations for safety and safety functions are likely to change. [24590-WTP-ATS-MGT-15-0387]

Verification: Verification is expected to be achieved through the following:

Verif. Method	Verif. By	Plan	Notes/Comments
I	ENG	Review the design for incorporation of the interlock.	*Document in a DVR*
D	SU/COM	Demonstrate that the Interlocks prevent transfer line drain valves from being opened simultaneously with the suction from the UFP vessels.	

3.12.2.2.3 Vent, Purge, and Flush Backflow Prevention for HPAV Safety Interlock

Requirement: [HOLD] A backflow prevention safety interlock shall close the vent, purge, and flush utility isolation valves when UFP process pumps suction valves are open or pumps are running. [Section 4.4.36.2 and 4.4.36.3, PDSA – PT Facility, [ID : WTP-PSAR-ESH-01-002-02 ID#14681] [ID : WTP-PSAR-ESH-01-002-02 ID#15331]](G.2.6)

Basis Discussion: HPAV requirements for venting, purging, and flushing of process lines has added out-cell connections to utility systems (such as flush water lines). These utility connections are necessary to ensure that HPAV hazards in process lines are adequately mitigated by allowing lines to be flushed, purged, and vented to remove any hydrogen that might have accumulated. Connections between process lines and out-cell utility systems introduces the possibility of waste backflow into the utility system so that backflow prevention is necessary. [ALARA]

This requirement is on "HOLD" due to Nuclear Safety Engineering's (NSE) indication of an intent to re-perform the Hazards Analysis and Control Selection for pretreatment systems, therefore SSC designations for safety and safety functions are likely to change. [24590-WTP-ATS-MGT-15-0387]

Verification: Verification is expected to be achieved through the following:

Verif. Method	Verif. By	Plan	Notes/Comments
I	ENG	Review the design for incorporation of the interlock.	*Document in a DVR.*
D	SU/COM	Perform a Demonstration to verify the capability to prevent opening of the return line vent, flush, and purge utility isolation valves whenever the UFP process pumps suction valves are open or pumps are running.	

3.12.2.2.4 UFP Feed Vessel Suction Line Purge (HPAV) Valve interlocks

Requirement: [HOLD] Purge valve shall open when there is no flow in the UFP feed vessels pump suction lines. [Appendix 4A, PDSA - PT Facility, [ID : WTP-PSAR-ESH-01-002-02 ID#16524]][Section 7.4.1.2, BOD, [ID : DB-ENG-01-001 ID#10639]](G.2.7)

Basis Discussion: This requirement is on "HOLD" due to Nuclear Safety Engineering's (NSE) indication of an intent to re-perform the Hazards Analysis and Control Selection for pretreatment systems, therefore SSC designations for safety and safety functions are likely to change. [24590-WTP-ATS-MGT-15-0387]

Verification: Verification is expected to be achieved through the following:

Verif. Method	Verif. By	Plan	Notes/Comments
I	ENG	Review the design for incorporation of the interlock.	*Document in a DVR*
T	SU/COM	Perform a system test to verify the correct operation of the purge valve when there is no flow in the pump suction lines.	

3.12.2.2.5 UFP Solids Transfer Pump Discharge Pressure Switch Interlock

Requirement: Upon detection of high pressure on the UFP solids pump discharge, the PPJ shall stop the UFP solids transfer pump. [Section 4.4.39, PDSA - PT Facility, [ID : WTP-PSAR-ESH-01-002-02 ID#14727] [ID : WTP-PSAR-ESH-01-002-02 ID#14729] [ID : WTP-PSAR-ESH-01-002-02 ID#14731] [ID : WTP-PSAR-ESH-01-002-02 ID#14733]](G.2.8)

Basis Discussion: Upon detecting an abnormally high discharge pressure, which indicates a down stream flow obstruction, the switches automatically stop the pump to avoid heating of pump contents and flashing to steam potential.

Verification: Verification is expected to be achieved through the following:

Verif. Method	Verif. By	Plan	Notes/Comments
I	ENG	Review the design for incorporation of the interlock.	*Document in a DVR.*

Verif. Method	Verif. By	Plan	Notes/Comments
T	SU/COM	Demonstrate the capability to shut down the solids transfer pump when the pump discharge pressure is above an established setpoint.	

3.12.2.2.6 Ultrafiltration Loop Power Flush Interlocks

Requirement: **[HOLD]** A power flush function shall be designed with associated safety interlocks as listed below:

- Loss of power – Actuates the power flush after a time delay following the loss of power.
- Dead leg timer – A timer interlock will stop pumps based on runtime.
- Power flush vessel low level – discharge isolation valves on the power flush vessel are closed when low level in the vessel is detected.
- Power flush vessel low pressure – power flush vessel vent valves are closed on detection of low pressure in the vessel.

[Section 4.4.41.3, PDSA – PT Facility, [ID : WTP-PSAR-ESH-01-002-02 ID#14767]](G.2.9)

Basis Discussion: The UFP safety power flush system is activated by the system operator to automatically flush the bulk of the hydrogen producing waste slurry from the Hot Cell portions of the ultrafilter loops by flushing the slurry into the drain collection system. The flush prevents long term accumulation of hydrogen gas in the loop components by maintaining a continuous air purge through the loop.

This requirement is on "HOLD" due to Nuclear Safety Engineering's (NSE) indication of an intent to re-perform the Hazards Analysis and Control Selection for pretreatment systems, therefore SSC designations for safety and safety functions are likely to change. [24590-WTP-ATS-MGT-15-0387]

Verification: Verification is expected to be achieved through the following:

Verif. Method	Verif. By	Plan	Notes/Comments
I	ENG	Review the design for incorporation of the interlock.	*Document in a DVR*
T	SU/COM	Test the control logic ensures proper power flush interlocks perform the required safety functions.	

3.12.3 System Interface Requirements

3.12.3.1 Active Safety Instrumentation, Programmable Protection System

Requirement: The UFP instruments with active safety functions are required to interface with the PPJ or be engineered as local safety instrumented functions. Signal interfaces shall use standard 4-20 mA or digital contacts. Active safety instrumentation is implemented independently to the normal control system (PCJ) through the PPJ system or in local logic solvers. [Section 7.1, BOD, [ID : DB-ENG-01-001 ID#10529]](G.2.1, G.2.2, G.2.3, G.2.4, G.2.5, G.2.6, G.2.7, G.2.9)

Basis Discussion: The PPJ is the main safety system logic solver used on WTP and includes logic programming to implement the active safety controls. Appendix C provides a list of the UFP active safety instrumented functions and implementing components for the UFP system.

The PPJ is designed to remain operational following a major seismic event or loss of power. The PPJ provides post-accident monitoring indications and alarms required to be available after seismic or other design basis events. Safety instruments are qualified to survive any event or condition for which they are relied upon to provide monitoring or control.

Verification: Verification is expected to be achieved through the following:

Verif. Method	Verif. By	Plan	Notes/Comments
I	ENG	Verify required interface included in specifications and material requisitions (MRs) used to procure active safety instruments.	*Document in a DVR*

3.12.3.2 Implementation of Active Safety Instrumented Functions

Requirement: The active safety instrumented functions for the UFP system shall be designed in accordance with the safety criterion 4.3-1, 4.3-3, 4.3-4, 4.3-6, 4.4-1 and 4.4-2 of 24590-WTP-SRD-ESH-01-001-02, Safety Requirements Document Volume II. [Safety Criterion, 4.3-1, 4.3-3, 4.3-4, 4.3-6, 4.4-1 and 4.4-2, SRD, [ID : SRD-ESH-01-001-02 ID#44] [ID : SRD-ESH-01-001-02 ID#46] [ID : SRD-ESH-01-001-02 ID#47] [ID : SRD-ESH-01-001-02 ID#50] [ID : SRD-ESH-01-001-02 ID#53] [ID : SRD-ESH-01-001-02 ID#54]](G.2.1, G.2.2, G.2.3, G.2.4, G.2.5, G.2.6, G.2.7, G.2.9)

Basis Discussion: The SRD establishes the criterion and applicable standards for the safety design. The design processes including 24590-WTP-GPG-J-015, *Safety Instrumented System Implementation* and electrical design criteria are used to ensure independence and that the design complies with the mandated standards. The completed designs are documented in Safety Systems Requirements Specification and other design documents, which are required to be verified to ensure compliance with the standards.

Verification: Verification is expected to be achieved through the following:

Verif. Method	Verif. By	Plan	Notes/Comments
I	ENG	Verify the Safety Systems Requirements Specifications and designs are in accordance with the criterion and standards in safety criterion 4.3-1, 4.3-3, 4.3-4, 4.3-6, 4.4-1 and 4.4-2 of 24590-WTP-SRD-ESH-01-001-02, Safety Requirements Document Volume II.	*Document in a DVR*

3.12.3.3 Additional Safety Instrumentation: Single Failure Criteria/SC Requirements

Requirement: The UFP system SC safety instrumented functions shall be designed in accordance with safety criterion 4.3-2 and 4.3-5 of 24590-WTP-SRD-ESH-01-001-02, Safety Requirements Document Volume II. [Safety Criterion, 4.3-2 and 4.3-5, SRD, [ID : SRD-ESH-01-001-02 ID#45] [ID : SRD-ESH-01-001-02 ID#48]] (G.2.1, G.2.2, G.2.3, G.2.4, G.2.5, G.2.6, G.2.7, G.2.9)

Basis Discussion: For safety instrumented functions required to meet the single failure criterion, additional work related to fire zone separation and a detailed single failure analysis following the guidance in 24590-WTP-GPG-ENG-0159, *Single Failure Analysis Process for Mechanical, HVAC, and Control Systems,* is required. The completed designs are documented in Safety Systems Requirements Specification and other design documents, which are required to be verified to ensure compliance with the standards.

Verification: Verification is expected to be achieved through the following:

Verif. Method	Verif. By	Plan	Notes/Comments
I	ENG	Verify the Safety Systems Requirements Specifications and designs are in accordance with the criterion and standards in safety criterion 4.3-2 and 4.3-5 of 24590-WTP-SRD-ESH-01-001-02, Safety Requirements Document Volume II.	*Document in a DVR*

3.12.3.4 Process Control System – Remote Operations

Requirement: The UFP design shall include the following capabilities that are remotely controlled or monitored by the PCJ system:

UFP Vessels [HOLD]:

- Control waste transfers between UFP vessels and receipt and transfer to other PTF tanks systems (including line flushes).
- Monitor vessel level, density, and temperature.
- Control reagent additions
- Control vessel heating and cooling processes

UFP Breakpot [HOLD]:

- Monitor breakpot temperature.

Process/Transfer Pumps:

- The design shall have the capability to remotely start and terminate operation using the PCJ (interlocks are provided via the PPJ).

PJMs/Spargers [HOLD]:

- The design shall have the capability to remotely start and terminate operation using the PCJ (interlocks are provided via the PPJ).
- The design shall have the capability to transmit the sparger airflow rate and PJM airflow pressure to the PCJ.

Monitoring of PPJ Instruments:

- All PPJ status signals shall be forwarded to the PCJ.

Remote Operated Valves:

- The design shall have the capability to remotely open or close using the PCJ (interlocks are provided via the PPJ).
- The design shall have the capability to transmit the operating position to the PCJ.

[Sections 9.4.2, 11.4.1, 11.8.3.3, BOD, [ID : DB-ENG-01-001 ID#10966] [ID : DB-ENG-01-001 ID#11420] [ID : DB-ENG-01-001 ID#11565]][Sections 7.1, 14.4, ORD, [ID: WTP-RPT-OP-01-001 ID#1110] [ID : WTP-RPT-OP-01-001 ID#1485]](G.1)

Basis Discussion: The breakpot and PJM/spargers are on "HOLD" because SHSVD may result in elimination of breakpots as well as spargers or inclusion of spargers even in Newtonian vessels. [24590-WTP-ATS-MGT-15-0389]

Verification: Verification is expected to be achieved through the following:

Verif. Method	Verif. By	Plan	Notes/Comments
I	ENG	Review of design for control room remote monitoring and control features.	*Documented in an evaluation/assessment.*
D	SU/COM	Demonstrate the PCJ remote control operations for all the listed UFP equipment/components.	

3.12.3.5 Process Control System – Instruments

Requirement: Instruments connected to the PCJ system shall not perform any credited active safety function. Instruments connected to the PCJ may include and perform safety boundary or retention functions. UFP instruments shall use standard commercially available instrumentation and communication protocols to interconnect to the PCJ system. Fieldbus or Modbus communication may be used. [Section 9.4.1, BOD, [ID : DB-ENG-01-001 ID#10963, ID : DB-ENG-01-001 ID#10964]](G.1)

Basis Discussion: The PCJ is used as the normal process control system. The PCJ allows remote operator control and monitoring of the UFP processes (e.g., provisions for process level, temperature, pressure, cooling and mixing, along with the ability to control and monitor pumps, motors, and valves to operate the UFP system). Alarms and warnings are provided to bring operator attention to, and allow rectification of abnormal process situations.

The instruments are part of the UFP. The system logic and control software is part of the UFP, but resides and is implemented by the PCJ. The software interfaces with software and hardware on other systems to collectively form an integrated control system for WTP. Software requirements originate from 24590-WTP-QAM-QA-06-001, *Quality Assurance Manual* (QAM), and the procedure for software lifecycle management 24590-WTP-GPP-SQP-208, *Plant Software Life Cycle Management.*

Verification: Verification is expected to be achieved through the following:

Verif. Method	Verif. By	Plan	Notes/Comments
I	ENG	Verify required specifications (related to PCJ interface) are included in MRs used to procure instruments.	*Documented in an evaluation/assessment.*

3.12.4 Other Technical, Specialty, Operations and Maintenance Requirements

3.12.4.1 Pneumercator - Purge Air Liquid Level Instrumentation

Requirement: Purge air liquid level instrumentation (pneumercator) shall be designed ensuring the lines in process vessels do not plug (for example, automatic bubbler flushes) by including mechanical (clean-out port) capability for unplugging the pneumercator tubes if a plug occurs and flushing is unsuccessful. [Section 11.16, ORD, [ID : RPT-OP-01-001 ID#1373]](F.1)

Basis Discussion: Pneumercator tubes are also known as bubblers. [ALARA]

Verification: Verification is expected to be achieved through the following:

Verif. Method	Verif. By	Plan	Notes/Comments
I	ENG	Review design documentation to verify purge air liquid level instrumentation lines have capability for mechanically unplugging the pneumercator tubes.	*Documented in an evaluation/assessment.*

3.12.4.2 Pipe-mounting of Instruments Installed in Solids Piping

Requirement: Instrumentation installed in UFP system piping that transfers process liquids containing solids shall be flush-mounted and not protrude into the pipe. [Section 11.16, ORD, [ID : RPT-OP-01-001 ID#1373]]

Basis Discussion: Flush mounting prevents solids from plugging and the instrumentation from providing erroneous indications as it does not create an obstruction of flow where solids could accumulate. For example, transducers installed in a short pipe stub would fill with solids. [ALARA]

Verification: Verification is expected to be achieved through the following:

Verif. Method	Verif. By	Plan	Notes/Comments
I	ENG	Review design documentation to verify instrumentation installed solids piping is flush mounted.	*Documented in an evaluation/assessment.*

3.12.4.3 Contaminated Process Lines Instrumentation

Requirement: Instrumentation that is required for contaminated process lines shall be located on remotely maintainable jumpers, within bulges, unless they can be located outside of R5/C5 areas. [Section 11.16, ORD, [ID : RPT-OP-01-001 ID#1373]]

Basis Discussion: Accessibility must be provided to support maintenance or replacement of instruments. [ALARA]

Verification: Verification is expected to be achieved through the following:

Verif. Method	Verif. By	Plan	Notes/Comments
I	ENG	Review design to verify instruments are capable of being maintained or replaced without requiring access to high radiation/contamination areas.	*Documented in an evaluation/assessment.*

3.12.4.4 In-Line Temperature Measurement

Requirement: Temperature elements shall be installed in thermowells to allow removal without interrupting the process. [Section 11.16, ORD, [ID: WTP-RPT-OP-01-001 ID#1373]]

Basis Discussion: Installing temperature elements in thermowells reduces maintenance time and worker exposure to process fluids. Although processes will still be interrupted during maintenance, the extent of the interruption will be minimized. [ALARA]

Verification: Verification is expected to be achieved through the following:

Verif. Method	Verif. By	Plan	Notes/Comments
I	ENG	Review design to verify temperature elements are installed in thermowells.	*Documented in an evaluation/assessment.*

3.12.4.5 In-Line Flowmeter Bypasses

Requirement: Where flow interruption is not acceptable, piping design shall include bypasses for in-line mounted flowmeters. [Section 11.16, ORD, [ID : RPT-OP-01-001 ID#1373]]

Basis Discussion: This allows for continuous operation of the process.

Verification: Verification is expected to be achieved through the following:

Verif. Method	Verif. By	Plan	Notes/Comments
I	ENG	Review the piping design to verify that flowmeters are designed with bypass piping around the flowmeter.	*Documented in an evaluation/assessment.*

3.13 Other Structure, Systems and Components Requirements

3.13.1 Mission and Functional/Performance Requirements

3.13.1.1 Lubrication

Requirement: Permanently lubricated, sealed for life components shall be used wherever possible in order to reduce maintenance requirements. [Section 9.1, ORD, [ID : RPT-OP-01-001 ID#1172]]

Basis Discussion: None.

Verification: Verification is expected to be achieved through the following:

Verif. Method	Verif. By	Plan	Notes/Comments
I	ENG	Review the design to verify the components identified in the analysis have permanently lubricated, sealed for life appurtenances.	*Documented in an evaluation/assessment.*

3.13.2 Nuclear Safety, ALARA, Environmental and Other Regulatory Requirements

3.13.2.1 Design for Accessibility, Operability, Maintainability, Inspectability, Testing and Simplification

Requirement: UFP components, valves, instruments and electrical components used in routine operations and valves in instrumentation sensing lines shall be designed as follows:

- Simplified and minimized wherever practicable to improve reliability, operability, and maintainability.
- The capability for remote operation and inspection where accessibility is difficult (all locations).
- Position indicators for valves in process services (all locations).
- Lockout capability where needed using commercially manufactured devices other than chains (reach rods are used only if no other option).
- Control or electrical wiring connectors (plugs) that are keyed to assure proper reconnection (if 110 volts or less) thus facilitating maintenance (all locations).
- Decontamination (remote locations, in-cell).
- Sectionalized insulation to allow easy removal and replacement and for components operating at high temperatures (out-cave/occupied areas).
- Structures that allow manned access from the floor, e.g., permanent platform for instrument sensing line valves, both hand-and-control-operated valves (out-cell).
- Instrumentation panels housing liquid level systems and associated remote I/O, and pressure transducers/transmitters, shall be located in C3 classified areas as a precaution against back-contamination.
- UFP equipment, instrumentation, and electrical components shall be located outside the C3 contamination area where possible.
- HPAV instrumentation and control items will be design to facilitate periodic maintenance, testing, and surveillance to assure continued operability.
- UFP systems components that contain dangerous (hazardous) wastes shall be located as to facilitate inspection.

[Section 6.7, 7.4.1.2, 8.1.2, 9.5.6, 11.3.1, 11.3.2, 11.3.2.2, 11.3.2.3, 11.3.2.7, 11.4.1, 11.4.4, 11.7.4 and 12.6.3 BOD, [ID : DB-ENG-01-001 ID#11106] [ID : DB-ENG-01-001 ID#10637] [ID : DB-ENG-01-001 ID#10415] [ID : DB-ENG-01-001 ID#10698] [ID : DB-ENG-01-001 ID#11104] [ID : DB-ENG-01-001 ID#11150] [ID : DB-ENG-01-001 ID#11396] [ID : DB-ENG-01-001 ID#11398] [ID : DB-ENG-01-001 ID#11736] [ID : DB-ENG-01-001 ID#11439] [ID : DB-ENG-01-001 ID#11388] [ID : DB-ENG-01-001 ID#11396] [ID : DB-ENG-01-001 ID#11406] [ID : DB-ENG-01-001 ID#11419] [ID : DB-ENG-01-001 ID#11421] [ID : DB-ENG-01-001 ID#11532]][Sections 5.2, 7.1, 9.1, 8.1.1, 11.16, 14.1, 14.3, 14.4, 14.7 15.1 and 16.1, ORD, [ID: WTP-RPT-OP-01-001 ID#1045] [ID : RPT-OP-01-001 ID#1103] [ID : RPT-OP-01-001 ID#1104] [ID : RPT-OP-01-001 ID#1107] [ID : RPT-OP-01-001 ID#1173] [ID : RPT-OP-01-001 ID#1175] [ID : RPT-OP-01-001 ID#1177] [ID : RPT-OP-01-001 ID#1178] [ID : RPT-OP-01-001 ID#1179] [ID : RPT-OP-01-001 ID#1180] [ID : RPT-OP-01-001 ID#1174] [ID : RPT-OP-01-001 ID#1185] [ID : RPT-OP-01-001 ID#1186] [ID : RPT-OP-01-001 ID#1373] [ID : RPT-OP-01-001 ID#1143] [ID : RPT-OP-01-001 ID#1485] [ID : RPT-OP-01-001 ID#1500] [ID : RPT-OP-01-001 ID#1373] [ID : RPT-OP-01-001 ID#1486] [ID : RPT-OP-01-001 ID#1487] [ID : RPT-OP-01-001 ID#1542] [ID : RPT-OP-01-001 ID#1500] [ID : RPT-OP-01-001 ID#1604]][Section 4.4, Safety Criterion 4.4-3, SRD, [ID : SRD-ESH-01-001-02 ID#55]][Section 4.3.4.6, 4.3.5.6, 4.4.21.6, 4.4.30.6, 4.4.35.6, 5.5.6 and 5.5.25, PDSA - PT Facility, [ID : WTP-PSAR-ESH-01-002-02 ID#14016] [ID : WTP-PSAR-ESH-01-002-02 ID#14035] [ID : WTP-PSAR-ESH-01-002-02 ID#14605] [ID : WTP-PSAR-ESH-01-002-02 ID#14676] [ID : WTP-PSAR-ESH-01-002-02 ID#14473] [ID : WTP-PSAR-

ESH-01-002-02 ID#14908] [ID : WTP-PSAR-ESH-01-002-02 ID#15070]][Condition III.10.C.5.c.iii, DWP, [ID : WA7890008967 WTP ID#191]](I.1)

Basis Discussion: The pretreatment facility contains highly radioactive wastes and hazardous materials that come in contact with various systems, structures, and equipment. Because of this contact, these systems, structures, and equipment require special design considerations for access, handling, and maintenance. These design considerations and features support valve operation and maintenance whether in in-cell or out-cell locations. [ALARA]

Verification: Verification is expected to be achieved through the following:

Verif. Method	Verif. By	Plan	Notes/Comments
I	ENG	Review the design to verify that UFP components used in routine operations meet the requirements for accessibility, operability, maintainability and simplification as detailed in the requirement.	*Documented in an evaluation/assessment.*

3.13.3 System Interface Requirements

3.13.4 Other Technical, Specialty, Operations and Maintenance Requirements

3.14 Relevant Codes and Standards

3.14.1 Codes of Record

Table 3-10 identifies relevant external codes and standards applicable to the PTF UFP system design. These are selected from those documents that comprise the Code of Record (COR) as established in 24590-WTP-RPT-ENG-01-001, Technical Baseline Description, i.e., the WTP Contract, the Basis of Design (BOD), and the Safety Requirements Document Volume II (SRD). Use of these documents is typically invoked in the design process through the documents identified in Section 3.14.2. Beyond inclusion here, no attempt is made in this document to extract individual design requirements from these documents for allocation to SSCs.

In some cases, the expected means of verification may be established on the basis of tests or other criteria required by the codes and standards. This does not necessarily include verification or testing more appropriately defined in the procurement of individual subsystems or components, or which is a routine activity defined by specifications and/or procedures used by construction and startup.

Table 3-10 PTF UFP System Applicable Codes and Standards

Implementing Codes and Standards: [Contract No. DE-AC27-01RV14136, WTP Contract]
10 CFR 830, *Nuclear Safety Management*.
DOE O 420.1B (2005), CRD, *Facility Safety*.
DOE-STD-3009-94, (Change Notice 3 March 2006). *Preparation Guide for U.S. Department of Energy Nonreactor Nuclear Facility Documented Safety Analyses*.
WAC 173-303-640, *Dangerous Waste Regulations for Tank Systems*.
NFPA 801 2003, *Standard for Fire Protection for Facilities Handling Radioactive Materials, as tailored in Appendix C of the SRD*.

Implementing Codes and Standards: [24590-WTP-DB-ENG-01-001, Rev 1Q, Basis Of Design]
API STD 610-2010, *Centrifugal Pumps for Petroleum, Heavy Duty Chemical, and Gas Service*, as tailored in Appendix C of the SRD.
API STD 620, *Design and Construction of Large, Welded, Low-Pressure Storage Tanks.*
AWS D1.1/D1.1M, *Structural Welding Code - Steel.*
AWS D1.6, *Structural Welding Code - Stainless Steel.*
WAC 173-303, *Dangerous Waste Regulations.*
Implementing Codes and Standards: [24590-WTP-SRD-ESH-01-001-02, Rev 7, Section 4, SRD]
ASCE 4-98, *Seismic Analysis of Safety-Related Nuclear Structures and Commentary.*
ASME B31.3-1996, *Process Pipin*g, as tailored in Appendix C of the SRD.
ASME B73.1-2001, *Specification for Horizontal End Suction Centrifugal Pumps for Chemical Process,* as tailored in Appendix C
ASME B73.2-2003, *Specification for Vertical In-Line Centrifugal Pumps for Chemical Process,* as tailored in Appendix C
ASME B73.3-2003, *Specification for Sealless Horizontal End Suction Metallic Centrifugal Pumps for Chemical Process*, as tailored in Appendix C
ASME Section VIII, *"Boiler and Pressure Vessel Codes, Rules for Construction of Pressure Vessels"*
API STD 610-2010 Eleventh Edition, *Centrifugal Pumps for Petroleum, Petrochemical, and Natural Gas Industries*, as tailored in Appendix C
API STD 676-2009, *Third Edition, Positive Displacement Pumps – Rotary*, as tailored in Appendix C
API STD 68502011 Second Edition, *Sealless Centrifugal Pumps for Petroleum, Petrochemical, and Gas Industry Process Service*, as tailored in Appendix C.
DOE-STD-1020-94 (Change 1, 1996), *Natural Phenomena Hazards Design and Evaluation Criteria for Department of Energy Facilities,* as tailored in Appendix C.
DOE-STD-1021-93 (Reaffirmed with Errata April 2002), *Natural Phenomena Hazards Performance Categorization Guidelines for Structures, Systems, and Components.*
IEEE 338-1987, *Standard Criteria for Periodic Surveillance Testing of Nuclear Power Generating Station Safety Systems*, as tailored in Appendix C of the SRD.
IEEE 344-1987 (R1993), *Recommended Practice for Seismic Qualification of Class 1E Equipment for Nuclear Power Generating Stations*, as tailored in Appendix C of the SRD.
IEEE 379-1994, *Application of the Single Failure Criterion to Nuclear Power Generating Station Safety Systems*, as tailored in Appendix C of the SRD.
IEEE 384-1992, *Standard Criteria for Independence of Class 1E Equipment and Circuits*, as tailored in Appendix C of the SRD.
IEEE 497-2002, *Standard Criteria for Accident Monitoring Instrumentation for Nuclear Power Generating Stations*, as tailored in Appendix C of the SRD.
IEEE 1023-1988, *Recommended Practice for the Application of Human Factors Engineering to Systems, Equipment, and Facilities of Nuclear Power Generating Stations and Other Nuclear Facilities.*
IEEE 1187-2002, *Recommended Practice for Installation Design and Installation of Valve-Regulated Lead-Acid Storage Batteries for Stationary Applications* as tailored in Appendix C of the SRD.
ISA-S84.01-1996, *Application of Safety Instrumented Systems for the Process Industries.*
NFPA 70-1999, *National Electrical Code*
NFPA 69-2002, *Standard on Explosion Prevention Systems*, as tailored in Appendix C of the SRD.

NFPA 801-2003, *Standard for Fire Protection for Facilities Handling Radioactive Materials*, as tailored in Appendix C of the SRD.
Implementing Codes and Standards: [24590-WTP-PSAR-ESH-01-002-02, Rev 5i, PTF PDSA]
24590-WTP-RPT PET-10-012, *Methodology for Assessment of the Time to LFL in Select Newtonian Vessels: Post-Accident Case Assuming Solids Settling.*
API STD 610, *Centrifugal Pumps for Petroleum, Heavy Duty Chemical and Gas Industry Services.*
ASME B31.3, *Process Piping.*
ASME, Section II and VII, *Boiler and Pressure Vessel Code.*

3.14.2 WTP Design Criteria and (General) Specifications

Table 3-11 identifies relevant discipline design criteria, guides, and general specifications applicable to the PTF UFP system. Use of these documents to develop the detailed design of SSCs is governed by engineering procedures. The majority of requirements contained within these documents is derived from external codes and standards or are specified methods and approaches to achieve standardization and consistency of design. Beyond inclusion here, no attempt is made in this document to extract individual design requirements from these documents for tracing and verification, or to define how direction provided by these documents is applicable and allocated (or not) to individual SSCs.

Table 3-11 WTP Design Criteria, Guides, and General Specifications Applicable to PTF UFP Systems

Document Number	Title
Design Criteria Documents:	
24590-WTP-DC-M-06-001	*Mechanical Systems Design Criteria*
24590-WTP-DC-E-01-001	*Electrical Design Criteria*
24590-WTP-DC-E-06-002	*Design Criteria for Independence of Safety Equipment and Circuits*
24590-WTP-DC-E-07-001	*Design Criteria for Electrical Jumpers*
24590-WTP-DC-ENG-06-001	*Design Criteria for Environmental and Natural Phenomena Hazard Qualification of Structures Systems and Components*
24590-WTP-DC-ENG-12-001	*Pulse Jet Mixed Vessel Heel Management System Functional Design Criteria*
24590-WTP-DC-PS-01-001	*Pipe Stress Design Criteria Including "Pipe Stress Criteria" and "Span Method Criteria"*
24590-WTP-DC-PS-01-002	*Pipe Support Design Criteria*
24590-WTP-DC-PS-03-001	*Jumper Stress Design Criteria*
24590-WTP-DC-ST-04-001	*Seismic Analysis and Design Criteria*
Design Guides:	
24590-WTP-GPG-ENG-004	*Design Guide Pipe Stress, Pipe Layout, and Support Spacing*
24590-WTP-GPG-ENG-005	*Engineering Design Guide for Pipe Support*
24590-WTP-GPG-ENG-086	*Equipment Environmental Qualification*
24590-WTP-GPG-ENG-0094	*Pipe Design Work Process*
24590-WTP-GPG-ENG-0099	*Design Verification of Plant Design Deliverables*

Document Number	Title
24590-WTP-GPG-ENG-0103	*Equipment Seismic Qualification*
24590-WTP-GPG-ENG-0109	*Accessibility Review of Equipment and Components*
24590-WTP-GPG-ENG-0118	*Piping Component Stock Codes*
24590-WTP-GPG-ENG-0119	*Isometric Drawings Production*
24590-WTP-GPG-ENG-0122	*Disposition of Black Cell Spools*
24590-WTP-GPG-ENG-0123	*Disposition of Hard to Reach Spools*
24590-WTP-GPG-ENG-0127	*Processing Engineering Calculations*
24590-WTP-GPG-ENG-0140	*Hot Pipe Penetrations Through Concrete*
24590-WTP-GPG-ENG-0141	*WTP Radiation Damage Thresholds for Non-Metallic Materials*
24590-WTP-GPG-ENG-0143	*HPAV Stress Analysis Design Guide*
24590-WTP-GPG-ENG-0144	*Piping Interface with Flexible Equipment-Stress Analysis Design Guide*
24590-WTP-GPG-ENG-0145	*SC-IIIE Piping - Stress Analysis Design Guide*
24590-WTP-GPG-ENG-0146	*Piping Coating System Selection Guide*
24590-WTP-GPG-ENG-0149	*Piping Classification Guide*
24590-WTP-GPG-ENG-0150	*Plant Design/Mechanical Systems Equipment Interfaces: Terminal End Equipment*
24590-WTP-GPG-ENG-0153	*Safety Instrumentation - Independent Protection Layer Identification*
24590-WTP-GPG-ENG-0159	*Single Failure Analysis Process for Mechanical, HVAC, and Control Systems*
24590-WTP-GPG-ENG-0165	*Pipe Stress and Supports Confirmation*
24590-WTP-GPG-J-005	*Control Systems Interfaces*
24590-WTP-GPG-J-014	*Control Systems Design Process Guide*
24590-WTP-GPG-J-015	*Safety Instrumented System Implementation*
24590-WTP-GPG-J-016	*Control Valve Sizing*
24590-WTP-GPG-J-017	*WTP Seismic Category Application to C&I Systems*
24590-WTP-GPG-J-0057	*Setpoint Calculations*
24590-WTP-GPG-M-002	*Hydraulic Seals*
24590-WTP-GPG-M-005	*Ejectors (Jet Pumps) for Liquid Slurry Pumping*
24590-WTP-GPG-M-009	*Jet Pumps (Ejectors) for Vacuum Generation*
24590-WTP-GPG-M-011	*Pipe Sizing for Compressible Flow*
24590-WTP-GPG-M-012	*Pump Net Positive Suction Head*
24590-WTP-GPG-M-013	*Plant Wash System Design*
24590-WTP-GPG-M-014	*Fluidics Secondary Controllers*
24590-WTP-GPG-M-016	*Pipe Sizing for Lines with Liquids Containing Solids - Bingham Plastic Model*
24590-WTP-GPG-M-017	*Design Parameters & Test Pressures for Equipment & Piping*
24590-WTP-GPG-M-019	*Vessel Sizing*

Document Number	Title
24590-WTP-GPG-M-022	*Liquid and Vapor Line Sizing By Formula*
24590-WTP-GPG-M-023	*Other Losses in Piping Systems*
24590-WTP-GPG-M-027	*Recommended Slopes for Piping Systems*
24590-WTP-GPG-M-028	*Vent, Drain, and Root Valve Sizing and Selection for Piping Systems*
24590-WTP-GPG-M-032	*Vessel Overflow and Gravity Line Sizing*
24590-WTP-GPG-M-036	*Determining Quality Level and Seismic Category Classification of Sub-Components, Assemblies, Sub-Assemblies, and Parts*
24590-WTP-GPG-M-037	*Breakpot Sizing*
24590-WTP-GPG-M-047	*Preparation of Corrosion Evaluations*
24590-WTP-GPG-M-050	*Pressure Vessel and Heat Exchanger Design*
24590-WTP-GPG-M-052	*Specifying Design Cycles for Equipment and Piping*
24590-WTP-GPG-M-0058	*Minimum Flow Velocity for Slurry Lines*
24590-WTP-GPG-M-0059	*Avoiding Chemical Line Plugging - Plant Design Considerations*
24590-WTP-GPG-M-0061	*Vessel Structural Analysis and ASME Section VIII Evaluation*
24590-WTP-GPG-P-0003	*Jumper Design Guide*
24590-WTP-GPG-PL-002	*Plant Design Material Control Guide*
24590-WTP-GPG-SRAD-001	*Design Guide for ALARA*
Specifications:	
24590-PTF-3PS-MLFP-T0001	*Engineering Specification for Ultrafilters*
24590-WTP-3PS-G000-T0002	*Engineering Specification for Positive Material Identification (PMI) for Shop Fabrication*
24590-WTP-3PS-G000-T0015	*Engineering Specification for Environmental Qualification of Mechanical Equipment*
24590-WTP-3PS-JQ00-T0004	*Engineering Specification for Management of Supplier Software*
24590-WTP-3PS-JQ00-T0005	*Engineering Specification for Management of Supplier Safety Software*
24590-WTP-3PS-JQ06-T0005	*Engineering Specification for Environmental Qualification of Control and Electrical Systems and Components*
24590-WTP-3PS-JQ07-T0001	*Engineering Specification for Instrumentation for Package Systems*
24590-WTP-3PS-JQ08-T0001	*Engineering Specification for Construction and Installation of Controls and Instrumentation*
24590-WTP-3PS-MPJ0-T0001	*Engineering Specification for Fluidic Components*
24590-WTP-3PS-MPPM-T0001	*Engineering Specification for Positive Displacement Metering Pumps*
24590-WTP-3PS-MV00-T0001	*Engineering Specification for Pressure Vessel Design and Fabrication*
24590-WTP-3PS-MV00-T0002	*Engineering Specification for Seismic Qualification Criteria for Pressure Vessels*
24590-WTP-3PS-MV00-T0003	*Engineering Specification for Pressure Vessel Fatigue Analysis*
24590-WTP-3PS-MX00-T0001	*Engineering Specification for Process Bulge Design and Fabrication*

Document Number	Title
24590-WTP-3PS-NWP0-T0001	*Engineering Specification for General Welding and NDE Requirements for Supplier Fabricated Piping*
24590-WTP-3PS-PB01-T0001	*Engineering Specification for Technical Supply Conditions for Pipe, Fittings, and Flanges*
24590-WTP-3PS-PF00-T0001	*Engineering Specification for Rigid Process Jumper, Jumper Support Frame and Nozzle Frame Fabrication for PTF and HLW Facilities*
24590-WTP-3PS-PS02-T0001	*Engineering Specification for Shop Fabrication of Piping*
24590-WTP-3PS-PS02-T0007	*Engineering Specification for Shop Fabrication of Dual Contained Piping*

4 System Description

4.1 Configuration Information

4.1.1 Description of System, Subsystems, and Major Components

4.1.2 Boundaries and Interfaces

4.1.3 Physical Layout and Location

4.1.4 Principles of Operation

4.1.5 System Reliability Features

4.1.6 System Control Features

4.2 Operations

4.2.1 Initial Configuration (Pre-startup)

4.2.2 System Startup

4.2.3 Normal Operations

4.2.4 Off-Normal Operations

4.2.5 System Shutdown

4.2.6 Safety Management Programs and Administrative Controls

4.3 Testing and Maintenance

4.3.1 Temporary Configurations

4.3.2 TSR-Required Surveillances

4.3.3 Non-TSR Inspections and Testing

4.3.4 Maintenance

4.4 Supplemental Information

5 References and Design Documents List

5.1 Source / Basis References

Document Number	Rev	Title	Text Reference
24590-WTP-RPT-ENG-01-001	6D	*Technical Baseline Description*	TBD
24590-WTP-DB-ENG-01-001	2	*Basis of Design*	BOD
WA7890008967	NA	*Dangerous Waste Portion of RCRA Permit*	DWP
24590-WTP-RPT-OP-01-001	5	*Operations Requirements Document*	ORD
24590-WTP-PSAR-ESH-01-002-02	5C	*Preliminary Documented Safety Analysis to Support Construction Authorization; PT Facility Specific Information*	PDSA PT Facility
24590-WTP-SRD-ESH-01-001-02	7F	*Safety Requirements Document, Volume II*	SRD
DE-AC27-01RV14136	M339	*DOE/BNI WTP Contract Mod No. 304, Section C - Statement of Work*	WTP Contract

5.2 Other References

Document Number	Rev	Title
24590-PTF-3YD-UFP-00001	002	*System Description for the Ultrafiltration Process System (UFP)*
24590-WTP-SE-ENS-11-0048	001	*Design Changes To PT UFP and HLP Systems*
24590-PTF-N1D-UFP-00001	004	*UFP-BRKPT-00001A/B (PTF) -Ultrafiltration Recycle Breakpot*
24590-PTF-N1D-UFP-00002	004	*UFP-PP-00001,2,3A/B (PTF) -Ultrafilter Pulsepots*
24590-PTF-N1D-UFP-00003	005	*UFP-VSL-00002A/B (PTF) -Ultrafiltration Feed Vessels*
24590-PTF-N1D-UFP-00004	005	*UFP-FILT-00001-2-3A/B PTF Ultrafilter*
24590-PTF-N1D-UFP-00005	005	*UFP-VSL-00001A/B (PTF) -Ultrafiltration Feed Preparation Vessel*
24590-PTF-N1D-UFP-00007	000	*UFP-PMP-00042A-B PTF -Ultrafiltration Recirculation Pumps*
24590-PTF-N1D-UFP-00008	006	*UFP-VSL-00062-A/B/C (PTF) -Ultrafilter Permeate Collection*
24590-PTF-N1D-UFP-00009	002	*Corrosion Evaluation UFP-HX-00001 A/B (PTF) UFP Upfront Cooler Heat*
24590-PTF-N1D-UFP-00010	000	*Corrosion Evaluation UFP-HX-00041 A.B (PTF) UFP upfront Cooler Heat Exchanger*

5.3 System Design Documents

Document Number	Title
P&IDs	
24590-PTF-M6-UFP-00001001	*P&ID - PTF Ultrafiltration Process System Feed Preparation Vessel*
24590-PTF-M6-UFP-00001002	*P&ID - PTF Ultrafiltration Process System Bubblers UFP-VSL-00001A*
24590-PTF-M6-UFP-00001003	*P&ID - PTF Ultrafiltration Process System UFP-PMP-00041A and UFP-HX-00001A*
24590-PTF-M6-UFP-00001004	*P&ID - PTF Ultrafiltration Process System Feed Preparation Vessel UFP-VSL-00001B*
24590-PTF-M6-UFP-00001005	*P&ID - PTF Ultrafiltration Process System Bubblers UFP-VSL-00001B*
24590-PTF-M6-UFP-00001006	*P&ID - PTF Ultrafiltration Process System UFP-PMP-00041A and UFP-HX-00001A*
24590-PTF-M6-UFP-00001007	*P&ID - PTF Ultrafiltration Process System Feed Preparation Header UFP-VSL-00001A/1B*
24590-PTF-M6-UFP-00002001	*P&ID - PTF Ultrafiltration Process System Feed Vessel UFP-VSL-00002A*
24590-PTF-M6-UFP-00002002	*P&ID - PTF Ultrafiltration Process System Bubblers UFP-VSL-00002A*
24590-PTF-M6-UFP-00002003	*P&ID - PTF Ultrafiltration Process System UFP-PMP-00042A and UFP-PMP-00043A*
24590-PTF-M6-UFP-00002004	*P&ID - PTF Ultrafiltration Process System UFP-FILT-00001A/ -00002A/ _00003A/ -00043A*
24590-PTF-M6-UFP-00002005	*P&ID - PTF Ultrafiltration Process System UFP-FILT-00005A, UFP-HX-00001A*
24590-PTF-M6-UFP-00002006	*P&ID - PTF Ultrafiltration Process System UFP-PP-00001A, UFP-PP-00002A*
24590-PTF-M6-UFP-00002007	*P&ID - PTF Ultrafiltration Process System Pulse Pot UFP-PP-00003A*
24590-PTF-M6-UFP-00002008	*P&ID - PTF Ultrafiltration Process System UFP-PMP-00044A*

Document Number	Title
24590-PTF-M6-UFP-00003001	*P&ID - PTF Ultrafiltration Process System Feed Vessels UFP-VSL-00002B*
24590-PTF-M6-UFP-00003002	*P&ID - PTF Ultrafiltration Process System Bubblers UFP-VSL-00002B*
24590-PTF-M6-UFP-00003003	*P&ID - PTF Ultrafiltration Process System UFP-PMP-00042B and UFP-PMP-00043B*
24590-PTF-M6-UFP-00003004	*P&ID - PTF Ultrafiltration Process System UFP-FILT-00001B/ -00002B/ -00003B/ -00004B*
24590-PTF-M6-UFP-00003005	*P&ID - PTF Ultrafiltration Process System UFP-FILT-00005B, UFP-HX-00001B*
24590-PTF-M6-UFP-00003006	*P&ID - PTF Ultrafiltration Process System UFP-PP-00001B, UFP-PP-00002B*
24590-PTF-M6-UFP-00003007	*P&ID - PTF Ultrafiltration Process System Pulse Pot UFP-PP-00003B*
24590-PTF-M6-UFP-00004001	*P&ID - PTF Ultrafiltration Process System UFP-PMP-00044B*
24590-PTF-M6-UFP-00004002	*P&ID - PTF Ultrafiltration Process System Permeate Collection UFP-VSL-00062A*
24590-PTF-M6-UFP-00004003	*P&ID - PTF Ultrafiltration Process System Permeate Collection UFP-VSL-00062B*
24590-PTF-M6-UFP-00005001	*P&ID - PTF Ultrafiltration Process System Permeate Collection UFP-VSL-00062C*

Appendix A Test Objectives, Conditions, and Acceptance Criteria

NOTE: Demonstrations and Tests identified in this appendix are preliminary, pending completion of design activities. They are established to document the flowdown of verification needs established in Section 3 but are not sufficiently detailed for development of specific system and equipment test plans. They may be used for general planning only. This note is to be removed when design is sufficiently progressed to provide the details needed to establish the basis for testing and acceptance criteria. **[HOLD]**

Requirement (para #)	Test (T) or Demo (D)	Plan (including SSCs)	Acceptance Criteria (TAC or GTC)*	Notes/Comments	Test Conditions
3.4.1.1	T	**Receive LAW and HLW Feed** The system receives LAW feed from the FRP system, HLW feed from the HLP system, and evaporator concentrate from the FEP system. The system also receives process condensate for dilution of permeate prior to transfer to cesium ion exchange. **Service Provided** **Evaporator Bypass** - From the feed receipt vessels in the FRP system and from HLP-VSL-00022, the feed may be transferred to ultrafiltration for solids removal.	(GTC) The UFP feed preparation vessels receive a minimum of 150 gal/min from FRP-VSL-00002A/B/C/D, respectively, and observe that levels in the FRP vessel fall and that levels in the UFP vessel rise during the transfer. Demonstrate that UFP-VSL-00001A/B receives a minimum of 165 gal/min from HLP-VSL-00022 and observe that levels in the HLP vessel fall and that levels in the respective UFP vessel rise during the transfer. Demonstrate that UFP-VSL-00001A/B receives a minimum of 12 gal/min from FEP-SEP-00001A/B. Demonstrate that the RLD system will deliver a flow rate of 50 to 190 gal/min to UFP-VSL-00062A/B/C by opening UFP-YV-0199, -0293, and -0193, respectively. Demonstrate that condensate can be delivered (flow/no flow) to UFP-VSL-00002A/B via PWD-RK-00004 and the recirculation loop by opening the following valves:	Normal transfer route example is FRP-VSL-00002A, FRP-V-69018, FRP-YV-0302, FRP-YV-0349, FRP-PMP-00002A, FRP-YV-0353, FRP-YV-0345 to UFP-VSL-00001A. Use a comparable set up to prove feed forward from each FRP vessel to each UFP vessel. Use FRP-LI-0103A, -0108A, -0203A, -0208A; and UFP-LI-0107, -0207 for level observation. Observe rate of level change in the sending/receiving vessel to determine FRP pump flow rate. (Unresolved Issue 4) Test to be done as part of FAC 3.5, Transfer System Contents, 24590-PTF-3YD-FRP-00001, Rev. 2. Normal transfer route example is HLP-VSL-00022, HLP-V-95052, HLP-YV-0223, HLP-PMP-00021, HLP-YV-0292 (thru 3-way valve), HLP-YV-0269 to UFP-VSL-00001A. Use a comparable set up to prove feed forward from the HLP vessel to each UFP vessel. Use HLP-LI-0220A, UFP-LI-0107, and UFP-LI-0207 for level observation. Observe the rate of level change in the sending/receiving vessel to determine HLP pump flow rate. (Unresolved Issue 4) Normal transfer route example is FEP-SEP-00001A, FEP-YV-0222, FEP-PMP-00008A, FEP-YV-0225 to UFP-VSL-00001A. Use a comparable set up to prove feed forward from each FEP evaporator to each UFP vessel. Use FEP-FI-0261 for flow measurement. Use RLD-FI-1426 for flow measurement and record distribution header pressure using RLD-PI-1428. Use UFP-FI-1502 to verify the establishment of flow to UFP-VSL-00002A/B via PWD-RK-00004. Tests are to be conducted with water.	Startup Test: Associated FRP/HLP/FEP/RLD pumps, instruments, and controls are operable. Instrument Service Air (ISA) is operable.

Requirement (para #)	Test (T) or Demo (D)	Plan (including SSCs)	Acceptance Criteria (TAC or GTC)*	Notes/Comments	Test Conditions
			PWD-YV-0084/UFP-YV-1403/UFP-YV-0430 to UFP-VSL-00002A PWD-YV-0084/UFP-YV-1404/UFP-YV-0440 to UFP-VSL-00002B.	**Sources:** 24590-WTP-DB-ENG-01-001, Rev. 1Q, Section 6, 24590-PTF-MPC-FRP-00001, Section 8, Rev. D and 24590-PTF-MPE-FRP-00004, 24590-PTF-M6C-HLP-00007, Rev. C, Section 8, Mode 2A/B, 24590-PTF-MEC-FEP-00001, Rev. B, Section 5.4.1.1, Envelope A, 24590-PTF-MVC-10-00001, Rev. 0 Section 8.4, 24590-PTF-M6C-UFP-00018, Rev. A, Section 2.9 and 8.0	
3.4.1.1	T	**Transfer Process Materials** The system transfers materials to other systems: • The system transfers the concentrated solids to the HLP system, and liquid permeate to the CXP system. The system has the capability to transfer slurry that has been concentrated up to a maximum of 5 wt% undissolved solids to the TCP system.	**(GTC)** Demonstrate that HLP-VSL-00027A, HLP-VSL-00027B, and HLP-VSL-00028 receive a minimum of 61 gal/min from UFP-VSL-00002A/B, respectively, and observe that levels in the HLP vessels rise and that levels in the UFP vessel fall during the transfer. Demonstrate that CXP-VSL-0004 receives 70 gal/min minimum from each of UFP-VSL-00062A/B/C and observe that CXP-VSL-00004 level rises during the transfer and that levels in the UFP vessels fall during the transfer. Demonstrate that TCP-VSL-00001 receives 104 gal/min minimum from UFP-VSL-00002A/B and observe that TCP-VSL-00001 level rises during the transfer and that levels in the UFP vessel fall during the transfer.	Normal transfer route example is UFP-VSL-00002A, UFP-YV-0192, UFP-PMP-00044A, UFP-YV-0230 to HLP-VSL-00027A. Use a comparable set up to prove feed forward from each UFP vessel to each HLP vessel. Use crossover piping via UFP-YV-0432 to transfer UFP-VSL-00002A to HLP-VSL-00027B. Use UFP-LI-0119/-0219, HLP-LI-0160, -0164, 0296 for level observation. Use UFP-FI-0444 and -0445 to determine flow rates. Normal transfer route is via UFP-RFD-00038, -00033, and -00044 for UFP-VSL-00062A/B/C, respectively. Use UFP-LI-0167A, -0262A, -0162A, and CXP-LI-0102A for level observation. Use UFP-FI-0505B, -0509B, and -0903B associated with the RFD fluidics racks to determine flow rates. Normal transfer route example is UFP-VSL-00002B, UFP-YV-0292, UFP-PMP-00044B, UFP-JMPP-00062, TCP-SP-00014 (open), TCP-YV-00061, TCP-YV-00034 to TCP-VSL-00001. Use a comparable set up and the crossover piping via UFP-YV-0432 to transfer UFP-VSL-00002A to TCP-VSL-00001. **Sources:** 24590-CM-POA-MPE0-00004-27-28, Rev. B 24590-CM-POA-MPE0-00004-27-31, Rev. B 24590-CM-POA-MPE0-00004-27-35, Rev. C 24590-PTF-MPC-UFP-00033, Rev. B, Section 8, Scenario 2	Associated TCP instruments and controls are operable. PSA and ISA are operable
3.4.1.2, 3.4.1.3, 3.4.1.4, 3.4.3.1, 3.5.3.1	D	**[HOLD]** **Add Reagents** The system adds processing reagents to: • Precipitate solids using sodium permanganate (1M maximum strength $NaMnO_4$) and strontium nitrate (1M maximum strength $Sr(NO_3)_2$) • Wash solids with process condensate or dilute NaOH. • Leach solids with sodium hydroxide (19M NaOH) and possibly other chemicals	**(GTC)** Demonstrate that with SPR-TK-00001, SPR-PMP-00004A/B, and the associated MXR subsystem operational, sodium permanganate ($NaMnO_4$) can be delivered to the following: • UFP-VSL-00001A/B by opening UFP-YV-0182/-0282, respectively.	Startup Test: Normal distribution example from SPR-TK-00001 using a pump is via SPR-V-00018, UFP-V-00670, UFP-YV-0182, UFP-V-00667 to UFP-VSL-00001A. Normal distribution example from STR-TK-00001 using a pump is via STR-V-00019, UFP-V-00671, UFP-YV-0183, UFP-V-00666 to UFP-VSL-00001A.	Associated AFR/SHR/SPR/STR pumps, instruments and controls are operable. Sodium permanganate (SPR) is operable.

Requirement (para #)	Test (T) or Demo (D)	Plan (including SSCs)	Acceptance Criteria (TAC or GTC)*	Notes/Comments	Test Conditions
		• Oxidative leach solids with sodium permanganate (1M $NaMnO_4$) • Prevent foaming with antifoam agents. • Addition of Reagents with the in-line mixing capability. The system also uses nitric acid (2M HNO_3) and caustic (2M NaOH) as cleaning reagents for dissolution of deposits. **Service Provided** **Precipitation and Separation of Sr/TRU.** Precipitate and separate complexed strontium and transuranics (Sr/TRU) from liquid fraction. Separation of Sr and TRU (primarily americium) from complexant concentrate is achieved by the addition of non-radioactive strontium nitrate followed by the addition of sodium permanganate.	• UFP-VSL-00002A via the recirculation loop by opening SPR-YV-1003 and UFP-YV-0430, and modulating SPR-FV-1002. • UFP-VSL-00002B via the recirculation loop by opening SPR-YV-1005 and UFP-YV-0440, and modulating SPR-FV-1004. Demonstrate that with STR-TK-00001, STR-PMP-00001A/B, and the associated MXR subsystem operational, strontium nitrate, $Sr(NO_3)_2$, can be delivered to UFP-VSL-00001A/B by opening UFP-YV-0183/-0283, respectively. Demonstrate that with SHR-TK-00004, SHR-PMP-00007A/B, and the associated SHR subsystem operational, UFP-VSL-00002A/B receive a minimum of 88 gal/min of caustic (2M NaOH) by opening UFP-YV-0186/-0288, respectively. Demonstrate that with SHR-TK-00006, SHR-PMP-00015A/B, and the associated SHR subsystem operational, UFP-VSL-00002A/B receives a minimum of 88 gal/min of sodium hydroxide (19M NaOH) by opening UFP-YV-0188/-0286, respectively. Demonstrate that with SHR-TK-00006, SHR-PMP-00015A/B, and the associated SHR subsystem operational, UFP-VSL-00001A/B receives a minimum of 88 gal/min of sodium hydroxide (19M NaOH) by opening UFP-YV-0181/-0281, respectively. Demonstrate that with AFR-TK-00001, AFR-PMP-00011, and the associated AFR subsystem operational, UFP-VSL-00001A/B and UFP-VSL-00002A/B receive 0.78 gal/min minimum of anti-foam reagents (AFR) via	Flow indicators for STR and SPR are to be specified later when the vendor design is complete. (Unresolved Issue 7) Normal distribution example from SHR-TK-00004 using SHR-PMP-00007A is via SHR-V-40290, SHR-V-40292, BOF-V-40296, SHR-V-40312, SHR-V-, SHR-V-40315, SHR-V-00344, SHR-V-00347, SHR-V-00348, UFP-V-00689, UFP-YV-0186, UFP-V-00690 to UFP-VSL-00002A. Use SHR-FI-1009 for flow measurement. Normal distribution example from SHR-TK-00006 to UFP-VSL-00002A using SHR-PMP-00015A via SHR-V-40216, SHR-V-40218, SHR-V-40222, SHR-V-40238, SHR-V-40241, SHR-V-00343, SHR-V-00362, SHR-YV-1106, SHR-V-12049, SHR-V-00685, SHR-YV-0188, SHR-V-0686. Normal distribution example from SHR-TK-00006 to UFP-VSL-00001A using SHR-PMP-00015A via SHR-V-40216, SHR-V-40218, SHR-V-40222, SHR-V-40238, SHR-V-40241, SHR-V-00343, SHR-V-00367, SHR-YV-1104, SHR-V-12050, UFP-V-00669, UFP-YV-0181, UFP-V-00668. Use SHR-FI-1023/SHR-FI-1024 for flow measurements associated with UFP-VSL-00002A/B and UFP-VSL-00001A/B, respectively. Normal distribution example from AFR-TK-00001 using AFR-PMP-00011 is via AFR-V-11160, AFR-YV-0017, AFR-V-11161, AFR-V-11158, AFR-V-11159, AFR-V-11168, PWD-V-40428, PWD-YV-0096, UFP-V-40503, UFP-V-01232, RLD-V-35969, UFP-V-01219 to UFP-VSL-00001A. Use AFR-PMP-00011 metering setting for flow measurement.	Strontium nitrate (STR) is operable. Sodium hydroxide (SHR) 2M and 19M is operable. Anti-foam reagent (AFR) is operable. Nitric acid (NAR) is operable. Associated SHR/SPR pumps, instruments and controls are operable. Instrument Service Air (ISA) is operable.

Requirement (para #)	Test (T) or Demo (D)	Plan (including SSCs)	Acceptance Criteria (TAC or GTC)*	Notes/Comments	Test Conditions
			PWD-RK-00006, PWD-RK-00004, or PWD-RK-00047 by opening the following: To UFP-VSL-00001A via PWD-YV-00096/UFP-V-01218/-01219/-01220 (PWD-RK-00004) To UFP-VSL-00001B via PWD-YV-4605/UFP-V-01218/-1226/-01227/-01228 (PWD-RK-00047) To UFP-VSL-00002A/B via PWD-YV-0069/UFP-YV-0003/-00004 (PWD-RK-00006) Demonstrate that with NAR-TK-00006, NAR-00019A/B, and the associated NAR subsystem operational, UFP-VSL-00002A/B receives a minimum of 88 gal/min minimum of nitric acid (2M $HN0_3$) by opening UFP-YV-0187/-0287, respectively. Tests to be conducted with water.	Normal distribution from NAR-TK-00006 using NAR-PMP-00019A is via NAR-V-11095, NAR-V-11099, NAR-V-11136, NAR-V-11217, NAR-V-11137, NAR-V-11018, NAR-V-00120, NAR-YV-1023, NAR-V-00121, NAR-V-00263, NAR-V-00253, NAR-V-02512, UFP-V-00687, UFP-YV-0187, UFP-V-00688 to UFP-VSL-00002A. Use NAR-FI-1008 for flow measurement. **Sources:** 24590-WTP-DB-ENG-01-001, Rev. 1Q, Section 6.4 24590-PTF-MVC-10-00001, Rev. 0, Section 8 24590-WTP-3YD-SHR-00001, Rev. 2, Section 6.2.3.3	
3.4.1.5, 3.4.1.6	D/T	**[HOLD]** **Service Provided** **Permeate Rates.** The permeate flow rate varies with the concentration and with the feed. Permeate rates are anticipated to range up to a nominal 0.1 gal/(min·ft^2). **Filtration and Concentration Overview.** The filtration step itself employs two ultrafilter trains having adequate surface area to maintain required LAW and HLW production rates with a nominal total surface area of about 1500 sq.ft. or more per train. The filters will be cross flow in configuration and operate in a recirculation loop with the ultrafilter feed vessel.	**(GTC)** Engineering to review WTP Vessel Utilization Assessment Model (G2) Parameters and Key Assumptions in BOD 6.11.1 and Operations Research Model Parameters in BOD 6.11.2, and evaluate whether the system can be operated in Compliance with the Contract.	The following outlines the key phases of system operation that are to be functionally checked out during cold-chemical commissioning testing: • Waste batch preparation (i.e. feed blending) in UFP-VSL-00001A/B • Waste transfer and concentration-makeup transfers from UFP-VSL-00001A/B to UFP-VSL-00002A/B • Solids concentration from less than 5 wt% solids to a maximum of 20 wt% solids in UFP-VSL-00002A/B • Permeate transfer to and return from CXP • Power flushing for product recovery, line flushing, and HPAV control • Reagent addition, heatup, caustic leaching, cooldown, and reconcentration of solids in UFP-VSL-00002A/B • Solids washes and reconcentration of solids in UFP-VSL-00002A/B Solids transfers from UFP-VSL-00002A/B to HLP-VSL-00027A/B, respectively. **Sources:** 24590-WTP-DB-ENG-01-001, Rev. 1Q, Section 6.1.1	Cold-Chemical Commissioning Test: All interfacing process, reagent (needed for caustic leaching), utility, electrical, and control and instrumentation systems are operable.

Requirement (para #)	Test (T) or Demo (D)	Plan (including SSCs)	Acceptance Criteria (TAC or GTC)*	Notes/Comments	Test Conditions
3.4.2.5	D	Demonstrate remotability in accordance with 24590-WTP-PL-RACT-RT-0001, *WTP Remotability Verification Plan*.	**(GTC)** Successful remote removal and re-installation of the all the UFP equipment/ components listed in the test plans.	Physical demonstration	Cold Commissioning Operations
3.5.1.5	D	**[HOLD]** Perform a system demonstration to verify the capability of the heel management system to remove the remaining solids and liquid slurry from specific vessels as part of the normal process operations.	**(GTC)** Heel management system removes the slurry liquid heels from the UFP vessels.	Demonstration may be performed during the system tests with simulants.	Cold Commissioning
3.5.1.6, 3.11.1.2	T	**[HOLD]** Perform a test by heating the feed preparation vessels and recording the temperatures and time to reach the digestion temperatures.	**(TAC)** Heat materials inside the vessels from 25°C to 90°C in 9 hours if leaching in the UFP feed preparation vessels or 25°C to 45°C in 3 hours.	Test may be performed during system tests with simulants.	Cold Commissioning HPS UFP Feed preparation piping and pumps
3.5.1.7, 3.11.1.3	T	**[HOLD]** Perform a test by heating the feed vessels and recording the temperatures and time to reach the digestion temperatures.	**(TAC)** Heat materials inside the vessels from 25°C to 90°C in 9 hours and 45°C to 85°C in 6 hours in preparation for leaching in the UFP feed vessels	Test may be performed during system tests with simulants.	Cold Commissioning HPS UFP Feed piping and pumps
3.5.1.8	T	Perform a test of the system to verify the capability to maintain the permeate in the permeate vessel at a temperature above the filtration temperature.	**(TAC)** Maintain permeate received during simulant testing at or above the temperature (TBD) to keep the digested material in solution.	Test may be performed with water.	Cold Commissioning HPS UFP Permeate piping system and pumps
3.5.3.2	D	Perform a demonstration to confirm DIW can be delivered to the UFP vessels in sufficient quantity to wash the vessels.	(GTC) The velocity and pressure (TBD) of the DIW transfer line wash within the vessels is acceptable for adequate wash/decontamination of the UFP vessels		PCJ operating and monitoring flow meters Integrated water run Simulant not required
3.6.4.1	T	Perform a test that valve actuators (for valves subject to water hammer) are sufficiently slow to prevent water hammer.	Valve actuators close within time range **(TBD)**.		Cold Commissioning Systems associated with the valves.
3.7.2.1	D	**Flush System Components** The system flushes system components to complete a transfer, (to recover product), to help prevent potential plugging, to unplug a pipe or equipment component, or to decontaminate.	Demonstrate that upon initiation of a Normal Power Flush 1 operation, a minimum of one line volume of the recirculation loop can be returned to the originating vessel (UFP-VSL-00002A/B) via the pump suction line: 1450 gal. Demonstrate that upon initiation of a Normal Power Flush 2 operation, the recirculation loop can be flushed to PWD-VSL-00033: 1500 gal.	Normal Power Flush 1 example path is SHR-VSL-00002, SHR-V-40133, UFP-V-40079, UFP-YV-3125, UFP-V-40081, UFP-YV-3127, UFP-V-40098, UFP-YV-3128, UFP-YV-0124 to UFP-VSL-00002A. Use SHR-LI-1208/-1218 and UFP-LI-0119/-0219 to observe changes in vessel levels and confirm the execution of the operation. (Unresolved Issue 4) Normal Power Flush 2 example path is SHR-VSL-00002, SHR-V-40133, UFP-V-40079, UFP-YV-3125, UFP-V-40081, UFP-YV-3127, UFP-V-40098, UFP-YV-3128, UFP-YV-0313 to PWD-VSL-00033.	Startup Test: The SHR-VSL-00002 and SHR-VSL-00003 and the associated SHR subsystem is operational. Plant Service Air (PSA) is available. Instrument Service Air (ISA) is available. Associated PVP and DIW instruments, and controls are operable. Radioactive Liquid Waste Disposal (RLD) is operable.

Requirement (para #)	Test (T) or Demo (D)	Plan (including SSCs)	Acceptance Criteria (TAC or GTC)*	Notes/Comments	Test Conditions
			Demonstrate that upon initiation of a Normal Power Flush 3 operation, the balance of the recirculation (i.e., the portion of the loop not flushed by Normal Power Flush 1) can be returned to the originating vessel (UFP-VSL-0002A/B) via the pump discharge line: 626 gal.	Use SHR-LI-1208 and PWD-LI-0213 to observe changes in vessel levels and confirm the execution of the operation. (Unresolved Issue 4) Normal Power Flush 3 example path is SHR-VSL-00002, SHR-V-40133, UFP-V-40079, UFP-YV-3125, UFP-V-40081, UFP-YV-3127, UFP-V-40098, UFP-YV-3128, UFP-PV-0416, UFP-YV-0417 to UFP-VSL-00002A. Use SHR-LI-1208/-1218 and UFP-LI-0119/-0219 to observe changes in vessel levels and confirm the execution of the operation. (Unresolved Issue 4)	DIW-VSL-00001 and DIW-VSL-00002 and the associated subsystems are operable. PWD-VSL-00033, HLP-VSL-00027A, and HLP-VSL-00027B are operable and a means of emptying these vessels is available.
			Demonstrate that upon initiation of an Emergency Power Flush operation, three line volumes (4200 gal) of the recirculation loop can be flushed to PWD-VSL-00033 and that a minimum initial purge-air flow rate of 1500 scfm for 2 minutes is established in the pump-suction and pump-return portions of the loop, followed by a steady purge of 30 scfm.	Emergency Power Flush example path is SHR-VSL-00002 via SHR-V-40133, UFP-V-40079, UFP-YV-3125, UFP-V-40081, UFP-YV-3127, UFP-V-40098, UFP-YV-3128, UFP-YV-0313 to PWD-VSL-00033. Use SHR-LI-1207/-1217 and PWD-LI-0208/-0210 to observe changes in vessel levels and confirm the execution of the operation. Use UFP-FI-3112, -3114; UFP-FI-3212, -3214; UFP-FI-3116, -3118; and UFP-FI-3216, -3218 to confirm purge-air flows for pump returns. Use UFP-FI-1917, -1919; UFP-FI-2017, -2019; UFP-FI-1924, -1926; and UFP-FI-2024, -2026 to confirm purge-air flow for pump suctions. (Unresolved Issue 4)	
			Demonstrate that a critical line flush for solids settling can be performed for the following: • UFP-PMP-00041A/B pump suction to the respective vessel (i.e. UFP-VSL-00001A/B) • Feed Preparation Transfer Lines from UFP-PMP-00041A reagent addition line to UFP-VSL-00002A, UFP-VSL-00002B, and ASX sampling. • Feed Preparation Transfer Lines from UFP-PMP-00041B reagent addition line to UFP-VSL-00002A, UFP-VSL-00002B, and ASX sampling. • UFP-PMP-00044A/B reagent addition line to UFP-VSL-00002A/B, respectively. • Batch Transfer Lines from UFP-PMP-00044A to HLP-VSL-00027A and ASX sampling.	Normal flush route example for UFP-VSL-00001A pump suction and transfer lines is opening PVP-YV-2906 and record the flush flow rate on PVP-FI-2904. Engineering to evaluate results and verify that minimum critical velocities for solids settling can be achieved. Normal flush route for UFP-VSL-00002A/B pump suction and transfer lines is opening DIW-YV-1411/1412 and record the flush flow rate on DIW-FI-1310/-1321. Engineering to evaluate results and verify that minimum critical velocities for solids settling can be achieved. Testing is to be conducted with water. **Sources:** 24590-WTP-DB-ENG-01-001, Rev. 1Q, Section 6, BOD 24590-101-TSA-W000-0009-33-00002, Rev, A, pg. 5 of 47 24590-WTP-M6C-50-00012, Rev. 0, Section 6.1.16. 24590-PTF-MVC-SHR-00006, Rev. A, Attachment E, Section 8.5	

Requirement (para #)	Test (T) or Demo (D)	Plan (including SSCs)	Acceptance Criteria (TAC or GTC)*	Notes/Comments	Test Conditions
			• Batch Transfer Lines from UFP-PMP-00044B to HLP-VSL-00027B and ASX sampling.		
3.8.2.2	D	**[HOLD]** Perform an integrated system demonstration to confirm the PSA system provides air purging via spargers and PJMs to UFP feed vessels. Spargers	**(TAC)** The PSA system is capable of supplying air for purging via spargers and PJMs for both idle and full flow rates (**TBD**).	Full and idle flows to individuals sparge tubes and high-low flow alarms on individual sparge tubes are to be set and checked before the test. Flow indicators/transmitters will be located on PSA instrument racks	Cold Commissioning Demonstration: Plant Service Air (PSA) is operable. Pretreatment Vessel Vent Process System (PVP) is operable.
3.12.1.1	D	**Confinement of Waste Feed Materials** **Reliability of the Level Monitor and Alarm.** The level monitoring instrumentation and alarm shall be operable, providing a remote alarm in the PT facility control room when levels reach established set points.	**(TAC)** Simulate that the following alarm on high and low liquid levels: UFP-VSL-00002A UFP-LI-0209A (H/L) UFP-LI-0211A (H/L) UFP-LAHH-0209 UFP-LAHH-0211 UFP-VSL-00002B UFP-LI-0327A (H/L) UFP-LI-0329A (H/L) UFP-LAHH-0327 UFP-LAHH-0329	Set points will be identified in the Safety System Requirements Specifications (SSRSs). (Unresolved Issue 6) **Source:** Section 3.4.1.5.2.7, PDSA - PT Facility	Startup Test
3.12.1.2, 3.12.1.3	D/T	**[HOLD]** **Report System Conditions** The system reports system conditions for the purposes of monitoring and control. Some examples are: • Level monitoring within vessels • Monitor vessel contents for temperature and density.	**(GTC)** The system generates alarms, trips, interlocks, and operating data and reports the information to the Process Control System (PCJ) for coordination with other systems.	System scheme check, software, alarms, trips, interlocks, control interfaces, and indications are to be verified under the ICN software acceptance testing program by Engineering and an instrument loop check program by Startup. (Unresolved Issue 6) **Sources:** 24590-PTF-3YD-UFP-00001, Section 7	System scheme check, software, alarms, trips, interlocks, control interfaces, and indications are to be verified under the ICN software acceptance testing program by Engineering and an instrument loop check program by Startup. (Unresolved Issue 6)
3.12.2.1.1	D	**[HOLD]** **Hydrogen Mitigation Purge and Mixing SSCs** **Sparger Operation for Vessel Agitation.** The system shall signal the liquid level so that air is provided to the appropriate spargers (i.e., lower discharge only, or both upper and lower). The liquid-level instrumentation is also used to determine which air spargers will be activated. That is,	**(TAC)** Demonstrate for UFP non-Newtonian vessels (i.e., UFP-VSL-00002A/B) that for vessel agitation: (i.) only lower air spargers activate on low liquid-level (liquid level is below top of PJMs)	LSL and LSLL set points are identified in the SSRSs documents (Unresolved Issue 6) that will be developed by C&I at a later date. Full and idle flows to individuals sparge tubes and high-low flow alarms on individual sparge tubes are to be set and checked before the test.	Cold Commissioning Test: Plant Service Air (PSA) is operable. Instrument Service Air (ISA) is operable.

Requirement (para #)	Test (T) or Demo (D)	Plan (including SSCs)	Acceptance Criteria (TAC or GTC)*	Notes/Comments	Test Conditions
		there are two elevations for sparger nozzles: one located near the bottom of the vessel and the other one is located above PJMs. When the waste level in the vessel is above the PJMs, all spargers are required. In the case of low liquid level (e.g., below the top of the PJMs and above the PJM discharge nozzles), only the lower air spargers are required. **Air Mixing Spargers** **Defense in Depth for Sparger Overblows.** Additional defense in depth for sparger overblows is provided by a control that measures sparger airflow and will alarm to the control room on high sparger flow. [Section 3.4.1.5.6.7, PDSA - PT Facility]	(ii.) both lower and upper air spargers activate on above-PJM-liquid-level. UFP-VSL-00002A (Valves Open): UFP-LSL-TBD – PSA-YV-1005 (Upper Tier A) UFP-LSLL-TBD – PSA-YV-1007 (Lower Tier A) UFP-LSL-TBD – PSA-YV-1001 (Upper Tier B) UFP-LSLL-TBD – PSA-YV-1003 (Lower Tier B) UFP-VSL-00002B (Valves Open): UFP-LSL-TBD – PSA-YV-1013 (Upper Tier A) UFP-LSLL-TBD – PSA-YV-1015 (Lower Tier A) UFP-LSL-TBD – PSA-YV-1009 (Upper Tier B) UFP-LSLL-TBD – PSA-YV-1011 (Lower Tier B) PSA-FI-1313, -1314, -1315, and -1316 255 to 321 scfm (Upper and Lower Tier) / 208 to 262 scfm (Lower Tier) PSA-FI-1317, -1318, -1319, and -1320 255 to 321 scfm (Upper and Lower Tier) / 208 to 262 scfm (Lower Tier) Demonstrate that alarm(s) will be triggered in the control room when sparge air flow is above the high-flow-alarm set point of PSA-FI-1313 thru PSA-FI-1320.	Flow indicators/transmitters will be located on PSA-RK-00055 and PSA-RK-00056 (P&ID 24590-PTF-M6-UFP-00021001/2 & -00022001/2). See Unresolved Issue 25 regarding acceptance criteria. **Sources:** 24590-WTP-PSAR-ESH-01-002-02, Rev. 4v, Section 3.4.1.8.7.6 24590-WTP-PSAR-ESH-01-002-02, Rev. 4v, Section 3.4.1.5.6.7 24590-WTP-MCC-50-00001, Rev. 0, Attachment A	Pretreatment Vessel Vent Process System (PVP) is operable.
3.12.2.1.2	D	**[HOLD]** **Confinement of Waste Feed Materials** **Non-Newtonian Vessel Level Detection and Interlock.** Vessels with non-Newtonian fluids will have level controls to prevent overflowing their contents into the collection header overflows, which are designed only for Newtonian fluids. The Newtonian vessels do not have air spargers installed, which are required in non-Newtonian vessels. The level monitors will be interlocked to all non-Newtonian vessel outlet isolation valves to stop the postulated transfer of non-Newtonian waste from the non-Newtonian vessels not experiencing the overflow condition.	**(TAC)** Demonstrate that liquid level instrumentation on the two non-Newtonian UFP vessels (i.e., UFP-VSL-00002A/B) stop all inflows on high-high level detection, with the exception of recirculation lines. UFP-VSL-00002A LSHH-0119 – Closes UFP-YV-0126, -0186, -0187, -0188, -3440, -3444, -0176, -0178, -	Set points will be identified in the Safety System Requirements Specifications (SSRSs). (Unresolved Issue 6) Test to be done as part of FAC 4.2.3, Confinement of Waste Feed Materials (pg. A-6), 24590-PTF-3YD-HLP-00001, Rev. 2. See Unresolved Issue 20 regarding single-failure criterion and philosophy regarding the SC interlock shutting down transfer pumps. **Sources:** Section 5.5.6, PDSA - PT Facility	Startup Test: Piping, isolation valves, and level instrumentation is available. Both the Programmable Protection System (PPJ) and the Process Control System are operational.

Requirement (para #)	Test (T) or Demo (D)	Plan (including SSCs)	Acceptance Criteria (TAC or GTC)*	Notes/Comments	Test Conditions
			0180, -0319, -0321, -0115, -0323, -3127, -0430, DIW-YV-1405, DIW-YV-1414, and flush valves on Fluidics PSA-RK-00028 (UFP-YV-1101D, -1102D, -1103D, -1104D, -1105D, and -1106D). UFP-VSL-00002B LSHH-0219 – Closes UFP-YV-0226, -0286, -0287, -0288, -0276, -0278, -0280, -0307, -0309, -0311, -3454, -3458, -0110, -0440, -3227, -0440, DIW-YV-1406, DIW-YV-1415, and flush valves on Fluidics PSA-RK-00028 (UFP-YV-1007D, -1008D, -1009D, -1010D, -1011D, and -1012D) Demonstrate that upon vessel high liquid level, interlocks on vessels will function such that all incoming flows are terminated (above) and that discharge valves close on all non-Newtonian vessels, except on the vessel that has tripped the interlock. UFP-VSL-00002A UFP-LSHH-0209/-0211 - Close HLP-YV-0107, -0127, -0242, -0297, and UFP-YV-0292. Trips HLP-PMP-00017A/B, -00019A/B, UFP-PMP-00044B. UFP-VSL-00002B UFP-LSHH-0327/-0329 - Close HLP-YV-0107, -0127, -0242, -0297, and UFP-YV-0192. Trips HLP-PMP-00017A/B, -00019A/B, UFP-PMP-00044A.		
3.12.2.1.3	T	**[HOLD]** Perform an integrated system test that PSA blowdown terminates upon detection of a PJM overblow.	**(TAC)** Criteria is yet to be determined for detection of a PJM overblow.		Plant Service Air (PSA) and water for fills are available as necessary.
3.12.2.2.1	T	**[HOLD]** **UFP Reagent Bulge (UFP-BULGE-00001, UFP-BULGE-00002) Isolation Valves and Interlocks** **Functional Requirements for the Isolation Valves and Interlocks.** To verify that the UFP utility supply isolation valves and interlocks perform	**(TAC)** Demonstrate that when the following process air valves are open, the corresponding reagent supply valve cannot be opened and vice versa: UFP-PP-00001A UFP-YV-0137 and UFP-YV-0138	Simulate a low signal for plant service air pressure. Set points will be identified in the Safety System Requirements Specifications (SSRSs). (Unresolved Issue 6) **Sources:** Section 4.4.21.3, PDSA - PT Facility	Startup Test: Instrument Service Air (ISA) is available. The PPJ controls associated with the valves are available.

Requirement (para #)	Test (T) or Demo (D)	Plan (including SSCs)	Acceptance Criteria (TAC or GTC)*	Notes/Comments	Test Conditions
		their credited safety function, the following functional requirements must be met: • Hot cell plant service air and reagent supply valves to an ultrafiltration pulse pot cannot be simultaneously opened. • Hot cell plant service air supply valves to an ultrafiltration pulse pot cannot be opened and will be automatically shut on low plant service air pressure. • Hot cell reagent supply valves to an ultrafiltration pulse pot cannot be opened if the ultrafiltration pulse pot void valve is closed.	UFP-PP-00002A UFP-YV-0143 and UFP-YV-0144 UFP-PP-00003A UFP-YV-0150 and UFP-YV-0151 UFP-PP-00001B UFP-YV-0237 and UFP-YV-0238 UFP-PP-00002B UFP-YV-0243 and UFP-YV-0244 UFP-PP-00003B UFP-YV-0251 and UFP-YV-0250. Demonstrate that upon UFP-PSLL-1619, the follow valves will not open and will close if open: UFP-PP-00001A UFP-YV-0137 UFP-PP-00002A UFP-YV-0143 UFP-PP-00003A UFP-YV-0150 Demonstrate that upon UFP-PSLL-1717, the follow valves will not open and will close if open: UFP-PP-00001B UFP-YV-0237 UFP-PP-00002B UFP-YV-0243 UFP-PP-00003B UFP-YV-0251 Demonstrate that the following reagent supply valves cannot open when the corresponding pulse pot void valve is closed: UFP-PP-00001A UFP-YV-0138 and UFP-YV-0319 UFP-PP-00002A UFP-YV-0144 and UFP-YV-0321 UFP-PP-00003A UFP-YV-0151 and UFP-YV-0323		

Requirement (para #)	Test (T) or Demo (D)	Plan (including SSCs)	Acceptance Criteria (TAC or GTC)*	Notes/Comments	Test Conditions
			UFP-PP-00001B UFP-YV-0238 and UFP-YV-0307 UFP-PP-00002B UFP-YV-0244 and UFP-YV-0309 UFP-PP-00003B UFP-YV-0250 and UFP-YV-0311.		
3.12.2.2.2, 3.12.2.2.4	D/T	**[HOLD]** Demonstrate that the control logic verifies opening and closing of isolation valves in the appropriate order.	**(GTC)** Interlocks actuate and prevent transfer line drain valves from being open simultaneously with the transfer of waste from a UFP vessel.		vessels have liquids in it. Vessel pumps - Available
3.12.2.2.3	D	**[HOLD]** Perform a Demonstration to verify the capability to prevent opening of the return line vent, flush, and purge utility isolation valves whenever the UFP process pumps suction valves are open or pumps are running.	**(GTC)** The UFP feed vessels pump suction line purge valves open when there is no flow in the pump suction lines.		Non-Newtonian vessels have liquids in it. Vessel pumps - Available
3.12.2.2.5	T	**[HOLD]** Test the capability to shutdown the solids transfer pump when the pipe pressure achieves an established setpoint.	**(TAC)** The UFP solids transfer pump will shutdown when the discharge piping reaches a pressure (TBD).		UFP pumps operating PPJ operating Simulate interlock signal to shutoff the UFP pumps
N/A	D	**Separate Solids** The system treats waste slurry by separating the undissolved solids fraction from the liquids, thereby producing concentrated slurry and permeate (filtrate).	**(GTC)** Using water, demonstrate that a flow rate of 1800 to 2600 gal/min can be recirculated through each ultrafilter train. Using simulants, demonstrate that a flow rate of 1800 to 2600 gal/min can be recirculated through each ultrafilter train, observe that UFP-VSL-0002A/B liquid levels fall and that UFP-VSL-00062A/B/C level(s) rise during the ultrafiltration process. Demonstrate permeate flow across the ultrafilter membrane to the permeate collection vessels. Perform backpulse operations and record effects on permeability using simulants. Perform ultrafilter cleaning operations and record effects on permeability after having separated simulants.	Normal concentration loop recirculation example is UFP-VSL-00002A, UFP-YV-0124, UFP-PMP-00042A, UFP-PV-0416, UFP-YV-0417 to UFP-VSL-00002A. Use a comparable set up for the recirculation of UFP-VSL-00002B. Normal permeate discharge path example is via: • UFP-PDV-0135, UFP-PP-00003A, UFP-YV-0180 • UFP-PDV-0141, UFP-PP-00002A, UFP-YV-0178 • UFP-PDV-0148, UFP-PP-00001A, UFP-YV-0176 • UFP-PDV-0409, UFP-PP-00002A, UFP-YV-0178 • UFP-PDV-0414, UFP-PP-00001A, UFP-YV-0176 Then through either UFP-YV-0157 (to UFP-VSL-00062A),-0156 (to UFP-VSL-00062B), or -0155 (to UFP-VSL-00062C) Use UFP-LI-0119 and UFP-LI-0219 in the feed vessels (UFP-VSL-00002A/B) and UFP-LI-0167A, UFP-LI-0262A, UFP-LI-0162A in the permeate vessels for level observation. Use UFP-FI-0153 and UFP-FI-0253 on the pump discharges for flow measurement. Use UFP-FI-0136, -0142, -0149, -0408, -0413; and UFP-FI-0236, -0242, -0249, -0372, -0377 to calculate ultrafilter flux. Normal backpulsing operation example for UFP-PP-00001A is as follows: • Close UFP-YV-0176, UFP-PDV-0148, and UFP-PDV-0414.	Startup and Cold Commissioning Testing: UFP-VSL-00002A/B, associated UFP pumps, ultrafilter instruments, and controls are operable and at least one UFP-VSL-00062A, B, or C vessel is available. Pump seal water is available. PSA and ISA is available for backpulsing and pneumatic-valve operation. Reagents used for ultrafilter cleaning are available.

Requirement (para #)	Test (T) or Demo (D)	Plan (including SSCs)	Acceptance Criteria (TAC or GTC)*	Notes/Comments	Test Conditions
				• Open UFP-YV-0319 and UFP-YV-0137 to void the pulse pot and establish level. • Close UFP-YV-0319 and pressurize the pulse pot to 40 psi above the average tube-side pressure. • Close UFP-YV-0137 and open UFP-YV-0147 to backpulse UFP-FILT-00003A. • Open UFP-YV-0176 to relieve any residual pressure and resume operation by opening UFP-PDV-0148, and UFP-PDV-0414. Use a comparable set up for the backpulsing of other pulse pots and filters. Use UFP-PI-0131, -0133, 0132; -0139, -0145; -0146, -0152; -0407, -0415; -0412, -0416; and PI-0231, -0233, 0232; -0239, -0245; -0246, -0252; -0371, -0379; -0376, -0380 to calculate average tube-side pressure and verify pulse pot pressure discharge. **Sources:** C.7(d)(1)(i), DOE-BNI Contract 24590-WTP-DB-ENG-01-001, Rev. 1Q, Section 6.5, page 6-6 24590-PTF-RPT-PET-10-001, Rev. 1	
3.12.2.2.6	T	**[HOLD]** Test the control logic ensures proper power flush interlocks perform the required safety functions.	Demonstrate that after a predetermined time (TBD) after a loss of power to the UFP loop circulation pumps, the power flush system actuates Demonstrate dead leg timer operation. A timer stops the power flush pumps on runtime (TBD). Demonstrate the closure of power flush vessel at the low level (TBD) of the power flush vessel. Demonstrate the power flush vessel vent valves close upon detection of low pressure (TBD) in the power flush vessel.		Startup Test: The SHR-VSL-00002 and SHR-VSL-00003 and the associated SHR subsystem is operational. Plant Service Air (PSA) is available. Instrument Service Air (ISA) is available. Associated PVP and DIW instruments, and controls are operable. Radioactive Liquid Waste Disposal (RLD) is operable. DIW-VSL-00001 and DIW-VSL-00002 and the associated subsystems are operable. PWD-VSL-00033, HLP-VSL-00027A, and HLP-VSL-00027B are operable and a means of emptying these vessels is available.

Requirement (para #)	Test (T) or Demo (D)	Plan (including SSCs)	Acceptance Criteria (TAC or GTC)*	Notes/Comments	Test Conditions
3.12.3.4	D	Perform a demonstration of the capability to monitor non-Newtonian vessel liquid level. **UFP Vessels:** • Control waste transfers between UFP vessels and receipt and transfer to other PTF tanks systems (including line flushes). • Monitor vessel level, density, and temperature. • Control reagent additions • Control vessel heating and cooling processes **UFP Breakpot [HOLD]:** • Monitor breakpot temperature. **Process/Transfer Pumps:** • The design shall have the capability to remotely start and terminate operation using the PCJ (interlocks are provided via the PPJ). **PJMs/Spargers [HOLD]:** • The design shall have the capability to remotely start and terminate operation using the PCJ (interlocks are provided via the PPJ). • The design shall have the capability to transmit the sparger airflow rate and PJM airflow pressure to the PCJ. **Monitoring Instruments:** • The design shall have the capability to communicate with the PCJ. **Remote Operated Valves:** • The design shall have the capability to remotely open or close using the PCJ (interlocks are provided via the PPJ). • The design shall have the capability to transmit the operating position to the PCJ.	(TAC) Alarm(s) will be triggered in the control room when vessel level is above the high-flow-alarm setpoint or below the low-flow-alarm setpoint.		Startup Demonstration

Appendix B Descriptions of System Functional Flow and Interactions

Function: A.1	Receive Waste in Preparation
Detailed description: The system receives LAW feed from the FRP system, HLW feed from the HLP, and evaporator concentrate from the FEP to optimize production of HLW and LAW facilities.	
Initiation: This function initiates by the receiving vessel requesting a setpoint volume of feed from the possible source vessels.	
Termination: This function terminates when the approved batch volume has been transferred to the UFP feed vessels.	
Parallel or sequential functions: Mixing by PJMs, air purging, vessel cooling, vessel heating, reagent addition, vessel purging and line flushing.	
Applicable Modes: Normal Operations	

Function: A.2	Add Reagents to Preparation Vessels
Detailed description: The system adds processing reagents to: • Precipitate solids using sodium permanganate (1M maximum strength NaMnO4) and strontium nitrate (1M maximum strength Sr(NO3)2) • Wash solids with process condensate or dilute NaOH • Leach solids with sodium hydroxide (19M NaOH) and possibly other chemicals • Oxidative leach solids with sodium permanganate (1M NaMnO4) Prevent foaming with antifoam agents	
Initiation: This function initiates upon completion of transfer of pre-sampled waste and a determination of the envelope leaching and precipitation reagents to be added to the vessel.	
Termination: This function terminates when the approved quantity of reagents have been added to the preparation vessel.	
Parallel or sequential functions: Mixing by PJMs, air purging, vessel cooling, vessel heating, reagent addition, and line flushing.	
Applicable Modes: Normal Operations	

Function: A.3	Mix Waste in Preparation Vessels
Detailed description: The following mixing functions are applicable to vessels UFP feed preparation vessels: • Mix to support heat transfer for cooling vessel contents prior to transfer out • Mix to prevent plugging • Mix to support liquid blending • Mix to support blending to optimize reaction rates Mix to support caustic leaching	
Initiation: This function initiates upon the receipt of waste into the preparation vessel.	
Termination: This function terminates when the approved batch volume has been transferred to the UFP feed vessels.	
Parallel or sequential functions: Mixing by PJMs, air purging, vessel cooling, and line flushing from or to other systems in the PT facility.	
Applicable Modes: Normal Operations	

Function: A.4	Heat Waste

Detailed description: The vessel is heated using steam heating spargers (direct steam heating using two half-ring sparge pipes) to the digestion temperature (up to a set point of 185 °F), the slurry is allowed to digest for approximately 4 to 16 hours.
Initiation: The steam heating sequence is initiated manually by the operator and automatically controlled to the digestion temperature by the ICN. The control of steam flow will be based on temperature instrumentation in the vessel to maintain the desired digestion temperature.
Termination: This function terminates when the approved batch leaching and precipitation time period has been completed.
Parallel or sequential functions: Mixing by PJMs, air purging, line flushing from Tank Farms to PT facility.
Applicable Modes: Normal Operations

Function: A.5	Caustic Leaching
Detailed description: This process of the digestion (dissolving into solutions) of aluminum into solution by Caustic and heating.	
Initiation: This function initiates when 19M NaOH begins to be added to the ultrafiltration feed preparation vessel or upstream of the vessel for caustic leaching operations to dissolve non-radioactive metals such as aluminum, which would otherwise dilute the IHLW. The quantity of reagent added will be based on mathematically calculating the volume required for digestion of such metals.	
Termination: This function terminates when the flow totalizer instrument determines the correct volume of reagent has been added to the waste feed or to the vessel.	
Parallel or sequential functions: Mixing by PJMs, air purging, vessel cooling, and line flushing from or to other systems in the PT facility.	
Applicable Modes: Normal Operations	

Function: A.6	Precipitate Solids
Detailed description: The system has the capability to treat some wastes (envelope C only) to remove ^{90}Sr and TRU constituents via precipitation to ensure that the radionuclide limits in the LAW glass are met. Initially 19M NaOH is added, followed by 1M maximum strength $Sr(NO_3)_2$ to make the waste nominally 1M free hydroxide (OH) and up to 0.075M Sr^{2+}. These conditions precipitate the ^{90}Sr as $SrCO_3$. Finally, enough 1M maximum strength $NaMnO_4$ is added to achieve up to 0.05M MnO_4 solution to precipitate the TRU components. The primary mechanism for Sr-90 removal is dilution with added nonradioactive strontium nitrate combined with an increase in temperature to reduce the strontium solubility. The reaction chemistry of Mn species relevant to the mechanisms (i.e., precipitation, adsorption, and oxidation) of TRU removal is complex and outside the scope of this system description. The precipitation reactions are conducted at temperatures of up to 122 °F. Precipitation and filtration operations will normally be conducted at 113 °F. The precipitated solids are removed via ultrafiltration.	
Initiation: This function initiates on an agreed upon the mathematically calculated decision on the quantity of precipitating reagent to be added to the preparation waste.	
Termination: This function terminates when the correct volume of reagents has been added to the vessel and the flow is automatically halted when that set volume is achieved.	
Parallel or sequential functions: Mixing by PJMs, air purging, vessel cooling, line flushing from or to other systems in the PT facility.	
Applicable Modes: Normal Operations	

Function: A.7	Cooling Waste
Detailed description: – Contents of the feed preparation vessel are cooled following the leaching and precipitation processes by circulating the waste through cooling heat exchangers. Cooling is provided by	

jackets on the feed preparation vessels and/or by utilizing the external heat exchangers as allowed by the capability of pumps UFP feed preparation pumps.
Initiation: This function initiates when the leaching and precipitation are complete and the decision is made to transfer the waste to the feed vessels. .
Termination: This function terminates when the approved batch volume has reached the agreed discharge temperatures and the volume has been transferred to the feed vessels.
Parallel or sequential functions: Mixing by PJMs, air purging, vessel cooling, and line flushing from or to other systems in the PT facility.
Applicable Modes: Normal Operations

Function: A.8	Add anti-foam
Detailed description: Prevent foaming with anti-foaming reagents (AFR), as part of a foaming mitigation strategy for UFP vessels and ultrafilters.	
Initiation: This function initiates upon receipt of waste in the preparation vessel and completion of the precipitation process.	
Termination: This function terminates when the vessels have no waste in it and whenever sodium permanganate is added to the vessel.	
Parallel or sequential functions: Mixing by PJMs, air purging, vessel cooling, and line flushing from or to other systems in the PT facility.	
Applicable Modes: Normal Operations	

Function: A.9	Transfer Prepared Waste to UFP Feed Vessels
Detailed description: The waste slurry is transferred from the UFP preparation vessels to the UFP feed vessels where the separation of solids from the supernatant is performed. The UFP feed preparation transfer pumps will normally transfer large initial batches to UFP-VSL-00002A/B followed by small sub-transfers of approximately 1000 gallons. During solids concentration waste feed is received from UFP-VSL-00001A/B, and the solids are concentrated using ultrafiltration and additional waste feed will be added incrementally as permeate is removed from the vessel.	
Initiation: This function initiates once the Ultrafiltration Feed Vessels are ready to receive, and the appropriate batch chemical reaction have been completed in the preparation vessels. During the separation process, the feed vessel level will drop and the operator can initiate batch transfers to the feed vessel to restore the volume.	
Termination: This function terminates when a target volume of waste slurry has been transferred from preparation vessels or when the slurry density in the feed vessel becomes very high. The transfer line may be flushed after the transfer is completed.	
Parallel or sequential functions: Mixing by PJMs, air purging, vessel cooling, and line flushing from or to other systems in the PT facility.	
Applicable Modes: Normal Operations	

Function: B.1	Receive Waste in Feed Vessels
Detailed description: A large initial batch of waste is transferred from the feed preparation vessels to the receiving feed vessel. After receiving the initial batch of feed, feed is concentrated in the ultrafilter loop. Additional feed is added incrementally to maintain vessel level during ultrafiltration. Ultrafiltration continues until the concentration of the solids reaches the target wt% solids or the filter flux drops to a de minimus value.	
Initiation: This function initiates on the agreement to perform the transfer of waste from the preparation vessels. .	
Termination: When the target wt% solids is reached or the filter flux drops to a de minimus value..	
Parallel or sequential functions: Mixing by PJMs, air purging, vessel cooling, and line flushing from or to other systems in the PT facility.	

Applicable Modes: Normal Operations

Function: B.2	Add Reagents to Feed Vessels
Detailed description: The system adds processing reagents to: • Precipitate solids using sodium permanganate (1M maximum strength NaMnO4) and strontium nitrate (1M maximum strength Sr(NO3)2) • Wash solids with process condensate or dilute NaOH • Leach solids with sodium hydroxide (19M NaOH) and possibly other chemicals • Oxidative leach solids with sodium permanganate (1M NaMnO4) Prevent foaming with antifoam agents.	
Initiation: This function initiates on the agreement to perform on of the processes of caustic leaching, solids washing or oxidative leaching addition of the respective reagents. .	
Termination: This function terminates when the approved batch volume has been transferred and the minimum volume of flush water has run through the transfer pipe.	
Parallel or sequential functions: Mixing by PJMs, air purging, vessel cooling, and line flushing from or to other systems in the PT facility.	
Applicable Modes: Normal Operations	

Function: B.3	Mix Feed Vessel Waste
Detailed description: The following mixing functions are applicable to vessels UFP-VSL-00002A/B: • Mix to support heat transfer for cooling vessel contents prior to ultrafiltration • Mix to prevent accumulation of undissolved solids at pump suction • Mix to support liquid blending for washing • Mix to support blending to optimize reaction rates in oxidative and caustic leaching • Mix to support sampling.	
Initiation: This function initiates upon the receipt of waste into the preparation vessel.	
Termination: This function terminates when the approved batch volume has been transferred to the UFP feed vessels.	
Parallel or sequential functions: Mixing by PJMs, air purging, vessel cooling, and line flushing from or to other systems in the PT facility.	
Applicable Modes: Normal Operations	

Function: B.4	Heat Feed Vessel Contents
Detailed description: Heat contents of the feed vessel to the digestion temperature using internal steam sparge rings, which are submerged in the slurry.	
Initiation: This function initiates manually by the operator and automatically controlled to the digestion temperature by the ICN. The control of steam flow will be based on temperature instrumentation in the vessel to maintain the desired digestion temperature	
Termination: This function terminates when the approved batch volume has been transferred and the minimum volume of flush water has run through the transfer pipe from the Tank Farms to the PT facility.	
Parallel or sequential functions: Mixing by PJMs, air purging, vessel cooling, and line flushing from Tank Farms to PT facility.	
Applicable Modes: Normal Operations	

Function: B.5	Oxidative Leaching
Detailed description: Oxidative leaching is performed for waste streams containing relatively high chromium content. Oxidative leaching includes adding 1.0 M $NaMnO_4$ in a sequential manner after any caustic leaching	

to achieve a target molar manganese/chromium ratio of 1.1:1 at a temperature of ~77 to 113 °F. Oxidative leaching is performed at 113 °F. Sequential oxidative leaching, following caustic leaching and cooling, is conducted as follows: Add 1M $NaMnO_4$ at 1.1:1 molar manganese/chromium ratio, allow up to 6 hours of reaction time, reconcentrate slurry, and route permeate to PWD system via a permeate collection vessel. Wash slurry with process condensate and route the wash permeate to PWD via a permeate collection vessel.
Initiation: This function initiates upon determination that oxidative leaching is required to digest chromium and the reagents begin transfer to the feed vessel.
Termination: This function terminates when the slurry and sodium permanganate with at the digestion temperature has digested at a predetermined time period.
Parallel or sequential functions: Mixing by PJMs, air purging, vessel cooling, and line flushing from or to other systems in the PT facility.
Applicable Modes: Normal Operations

Function: B.6	Caustic Leaching
Detailed description: With caustic and heat, obtain the target conversion and maintain aluminum in solution at the filtration temperature. Leaching may be performed following solids concentration.	
Initiation: This function initiates when 19M NaOH begins to be added to the feed vessel or upstream of the vessel for caustic leaching operations to dissolve non-radioactive metals such as aluminum, which would otherwise dilute the IHLW. The quantity of reagent added will be based on mathematically calculating the volume required for digestion of such metals.	
Termination: Caustic leaching terminates when the slurry and caustic has been at the leaching temperature for a specified time.	
Parallel or sequential functions: Mixing by PJMs, air purging, vessel cooling, and line flushing from or to other systems in the PT facility.	
Applicable Modes: Normal Operations	

Function: B.7	Concentrate Solids
Detailed description: The system treats waste slurry by separating the undissolved solids fraction from the liquids, thereby producing concentrated slurry and permeate (filtrate).	
Initiation: This function initiates after receiving an in initial batch in the feed vessel.	
Termination: This function terminates when the concentration of solids in feed vessel reach the target wt% solids or the filter flux drops to a de minimus value. For this step, the wt% solids will be determined via mass balance.	
Parallel or sequential functions: Mixing by PJMs, air purging, vessel cooling, and line flushing from or to other systems in the PT facility.	
Applicable Modes: Normal Operations	

Function: B.8	Wash Concentrated Solids
Detailed description: Solids washing is performed to remove soluble species from the solids. If caustic leaching and/or oxidative leaching is performed, post washing is required after each of those sequences. Washing requires process condensate addition while the filtration loop is running. The slurry washes are collected in permeate collection vessels or acid/caustic effluent vessels PWD-VSL-00015/16.	
Initiation: This function initiates when "start fill" and "stop fill' levels are determined. Process condensate commences transfer into the feed vessel.	
Termination: This function terminates when one of the following occurs: • The sodium concentration in permeate vessels drops to approximately 3.5M – Monitored by density instrumentation in permeate vessels	

• The free hydroxide concentration in the feed vessels drops to <0.25M – Estimated by mass balance
Parallel or sequential functions: Mixing by PJMs, air purging, solids separation, vessel cooling, and line flushing from or to other systems in the PT facility.
Applicable Modes: Normal Operations

Function: B.9	Feed Vessel Cooling
Detailed description: Contents of the feed vessel are cooled after the leaching and precipitation processes to below the maximum allowable loop temperature during concentration (filtration) using vessel cooling jackets and external heat exchangers.	
Initiation: This function initiates after caustic leaching or during receipt of waste from the preparation vessels.	
Termination: This function terminates when the maximum pumping temperature is achieved.	
Parallel or sequential functions: Mixing by PJMs, air purging, line flushing from Tank Farms to PT facility.	
Applicable Modes: Normal Operations	

Function: B.10	Transfer HLW Concentrate Solids
Detailed description: Slurry can be transferred from the ultrafiltration feed vessel to the HLW lag storage and feed blending vessels in the HLP system for production of IHLW.	
Initiation: The solids transfer sequence is started by sending a request for transfer, including the volume of transfer, to the selected destination vessel.	
Termination: When the vessel level approaches the allowable heel for operating UFP-PMP-00044A/B (which is approximately 300 gal and in no event less than 100 gal), the pumping rate is automatically slowed, to help prevent entraining air into the suction line.	
Parallel or sequential functions: Mixing by PJMs, air purging, line flushing from Tank Farms to PT facility.	
Applicable Modes: Normal Operations	

Function: C.1	Ventilate UFP Vessels
Detailed description: Negative headspace pressure is maintained in the UFP vessels by the pretreatment vessel vent process (PVP) and process vessel vent exhaust (PVV) systems. The PVP receives vents from the UFP vessels and the PVV system controls and maintains the suction pressure of the UFP vessel. UFP vessels are located within black cells which are ventilated by the C5 ventilation (C5V) system.	
Initiation: This function initiates when wastes are transferred to the UFP vessels.	
Termination: This function terminates when the vessels are being decontaminated for removal and do not contain any waste.	
Parallel or sequential functions: All UFP processes.	
Applicable Modes: Normal Operations	

Function: C.2	Process Piping High Point Ventilation
Detailed description: The pretreatment vessel vent process (PVP) system provides venting of hydrogen at the highpoint of the UFP feed receipt vessel pump suction line, transfer lines drains, and process lines.	
Initiation: N/A.	
Termination: This function terminates during associated pump operation or flushing.	
Parallel or sequential functions: N/A.	
Applicable Modes: Normal Operations; Seismic Design Basis Accident Conditions	

Function: C.3	Ventilate UFP Vessel Pulse Jet Mixers (PJMs)

Detailed description: The pulse jet mixer ventilation (PJV) system provides venting for the PJMs' jet pump pairs discharged air for processing.
Initiation: This function initiates when waste is transferred to the UFP vessels.
Termination: This function terminates when the vessels are being decontaminated for removal and do not contain any waste.
Parallel or sequential functions: All UFP processes.
Applicable Modes: Normal Operations; Seismic Design Basis Accident Conditions

Function: C.4	Ventilate UFP Breakpots
Detailed description: Pretreatment vessel vent process (PVP system provides venting for the airbreak in the UFP breakpots.	
Initiation: This function initiates when waste is transferred to the UFP breakpots.	
Termination: This function terminates when the breakpots are being decontaminated for removal and do not contain any waste.	
Parallel or sequential functions: All UFP processes.	
Applicable Modes: Normal Operations; Seismic Design Basis Accident Conditions	

Function: D.1	Receive Permeate
Detailed description: Permeate is routed, from the ultrafilters through the pulsepots to the UFP permeate vessels.	
Initiation: This function initiates when the UFP feed vessel re-circulation pumps start feeding the ultrafilters and permeate is routed to the permeate vessels.	
Termination: This function terminates when the set volume of permeate is produced.	
Parallel or sequential functions: All UFP processes.	
Applicable Modes: Normal Operations	

Function: D.2	Adjust Permeate Chemistry
Detailed description: 19 M Caustic and Process Condensate may be added to prevent precipitation due to the common ion effect (multiple salts share sodium as a cation, and therefore changes in sodium concentration affect solubility).	
Initiation: This function initiates upon addition of process condensate or 19M NaOH to a permeate collection vessel.	
Termination: This function terminates upon completion of addition of a predetermined volume of reagents.	
Parallel or sequential functions: All UFP processes.	
Applicable Modes: Normal Operations	

Function: D.3	Heat CXP re-cycle stream
Detailed description: The contents of permeate vessels may be heated up above the filtration temperature (above 113 °F) using an external steam-jet heater or heated recirculation from the CXP system. The waste stream is heated to mitigate precipitation of phosphate, oxalate and other solid species.	
Initiation: This function initiates by the operator to commence the steam jet heating sequence to raise the temperature of the permeate.	
Termination: This function terminates when the permeate reaches the predetermined temperature.	
Parallel or sequential functions: All UFP processes	
Applicable Modes: Normal Operations	

Function: E.1	Sample UFP Vessels

Detailed description: UFP slurry received from the FRP may be sampled to determine the necessary steps to perform the solids separation. (UFP vessels, presently, are not a normal sample point to determine steps for solids separation.)
Initiation: This function initiates by the operator upon necessity.
Termination: This function terminates after a predetermined amount of time upon completion of sampling and the minimum volume of flush water has run through the sample to the preparation vessel.
Parallel or sequential functions: Mixing by PJMs, air purging, vessel cooling, sample line flushing.
Applicable Modes: Normal Operations

Function: E.1.1	Sample Feed Vessel
Detailed description: Samples may be taken from the concentrated slurry in feed vessels to confirm the target solids content and to determine the solids composition in support of caustic and/or oxidative leaching. Also, the weight percent solids may be inferred from the solids density, slurry density as measured in the feed vessel, and density of collected permeate.	
Initiation: This function initiates as an operator-initiated sequence.	
Termination: This function terminates after a predetermined amount of time upon completion of sampling and the minimum volume of flush water has run through the sample to the feed vessel.	
Parallel or sequential functions: Mixing by PJMs, air purging, vessel cooling, sample line flushing.	
Applicable Modes: Normal Operations	

Function: E.1.2	Sample Permeate Vessel
Detailed description: The vessels each have sampling capability, which will be used to detect breakthrough of an ultrafilter and can be used as needed to confirm mass balances.	
Initiation: This function initiates as an operator-initiated sequence.	
Termination: This function terminates after a predetermined amount of time upon completion of sampling and the minimum volume of flush water has run through the sample to the permeate vessel.	
Parallel or sequential functions: Mixing by PJMs, air purging, vessel cooling, sample line flushing.	
Applicable Modes: Normal Operations	

Function: F.1	Clean and Flush/Wash System
Detailed description: Demineralized water is used to flush piping and vessels. Ntitric acid and demineralized waster is used to clean and power flush the ultrafilter process loop.	
Initiation: Normal Operations.	
Termination: N/A.	
Parallel or sequential functions: N/A	
Applicable Modes: Normal, Abnormal, and Maintenance Operations	

Function: F.1.1	Perform Ultrafilter Loop Power Flush
Detailed description: The primary means to control hydrogen accumulation is to use the "power flush" system, a sequence of pneumatically driven flushes and air purges to remove the waste stream from the ultrafiltration loop. The ultrafilter loop piping will have a caustic water flush (power flush) to remove slurry from the loop at a predetermined time after circulation in the loop has stopped. Loop contents are flushed into drain collection vessels.	
Initiation: Termination of recirculation in the ultrafilter loop.	
Termination: After a predetermined set period of line flushing.	
Parallel or sequential functions: Normal Operations	
Applicable Modes: Normal, Abnormal, and Maintenance Operations	

Function: F.1.2	Wash UFP Vessels
Detailed description: Each vessel has internal wash rings to aid in decontamination and the removal of deposition during normal operations. This wash ring is supplied fluid from an associated wash rack that normally provides either demineralized water or process condensate; however, a temporary connection exists on the rack where additional reagents may be supplied.	
Initiation: Operator initiation.	
Termination: After a predetermined set period of vessel flushing.	
Parallel or sequential functions: Normal Operations	
Applicable Modes: Normal, Abnormal, and Maintenance Operations	

Function: F.1.3	Flush/Clean Ultrafilters
Detailed description: Ultrafilter cleaning is accomplished using back-pulsing, as well as circulating nitric acid and caustic through the ultrafiltration circuit. The ultrafilters may be back-pulsed with permeate, nitric acid, or caustic solution from pulse-pots, utilizing high-pressure air as the motive force. The second option is to clean the ultrafilter loop with weak or strong caustic solutions, and the third option is to clean with nitric acid. These methods may be used to restore the ultrafilter flux performance.	
Initiation: Operator initiation.	
Termination: After a predetermined set period of vessel flushing.	
Parallel or sequential functions: Normal Operations	
Applicable Modes: Normal, Abnormal, and Maintenance Operations	

Function: G.1	Non-Safety Monitor & Control
Detailed description: The UFP process is monitored and controlled by the PCJ system	
Initiation: This function should always be active.	
Termination: This function should never terminate.	
Parallel or sequential functions: This function runs in parallel to all other functions.	
Applicable Modes: Normal and abnormal operations, accident conditions.	

Function: G.2	Safety Monitor & Control
Detailed description: Safety instrumentation functions and alarms.	
Initiation: This function should always be active.	
Termination: This function should never terminate.	
Parallel or sequential functions: This function runs in parallel to all other functions.	
Applicable Modes: Normal and abnormal operations, accident conditions.	

Function: H.1	Supply Sparge Air to Feed Vessel Spargers
Detailed description: The sparger lines provide compressed air from the plant service air (PSA) system to support mixing of the UFP vessels and to prevent the buildup of hydrogen gas in the vessel headspace.	
Initiation: This function should always be active.	
Termination: This function should never terminates.	
Parallel or sequential functions: This function runs in parallel to all other functions.	
Applicable Modes: Normal and abnormal operations, accident conditions.	

Function: H.2	Supply Air to Instruments, Control Valves, and Utility Racks
Detailed description: Supply air to vessel Pulse Jet Mixers (PJMs) - Plant service air (PSA) system racks provide compressed air from the PSA system via jet pump pair ejectors to support mixing of the vessel slurry and to prevent the buildup of hydrogen gas in the vessel headspace.	

Initiation: This function should always be active.
Termination: This function should never terminate.
Parallel or sequential functions: This function runs in parallel to all other functions.
Applicable Modes: Normal and abnormal operations, accident conditions.

Function: H.3	Supply Air to Vessel Pulse Jet Mixers (PJMs)
Detailed description: Plant service air (PSA) system racks provide compressed air from the PSA system via HLP jet pump pair ejectors to support mixing of the vessel slurry and to prevent the buildup of hydrogen gas in the vessel headspace.	
Initiation: This function should always be active.	
Termination: This function should never terminate.	
Parallel or sequential functions: This function runs in parallel to all other functions.	
Applicable Modes: Normal and abnormal operations, accident conditions.	

Function: H.4	Receive Electrical Power
Detailed description: Receive electrical power - The low voltage electrical (480/208/120 V) system (LVE) provides electrical power to the UFP equipment.	
Initiation: This function should always be active.	
Termination: This function should never terminate.	
Parallel or sequential functions: This function runs in parallel to all other functions.	
Applicable Modes: Normal and abnormal operations, accident conditions.	

Function: I.1	Remove and Replace Hot Cell Equipment
Detailed description: The pretreatment in-cell handling (PIH) system provides mechanical handling for removal and placement of UFP hot cell equipment.	
Initiation: This function initiates when remote operations are required on UFP equipment in hot cells.	
Termination: This function terminates when remote operations are complete.	
Parallel or sequential functions: N/A.	
Applicable Modes: Normal and abnormal operations, accident conditions.	

Appendix C Active Safety Instruments and Functions

At the time of this revision, the UFP system and other PT systems are going through a re-evaluation of the conceptual design in conjunction with resolution of several technical concerns. Because of this, Appendix C has been indicated as TBD. Fundamental changes to the conceptual design will require a re-examination of the active safety instruments and functions.

Function Title	Safety Designation	Sensors	Final Control Elements	Functional Description
TBD	TBD	TBD	TBD	TBD

Appendix D System Procedures

[Start body of appendix here]

Appendix E System History

[Start body of appendix here]