OFFICE OF RIVER PROTECTION
P.O. Box 450, MSIN H6-60
Richland, Washington 99352

JAN 2 6 2016

16-ECD-0004

Ms. Jane A. Hedges, Program Manager
Nuclear Waste Program
Washington State
Department of Ecology
3100 Port of Benton Blvd.
Richland, Washington 99354

Ms. Hedges:

SUBMITTAL OF LOW-ACTIVITY WASTE FACILITY AND ANALYTICAL LABORATORY SYSTEM DESIGN DESCRIPTION DOCUMENTS

Reference: WA7890008967, "Dangerous Waste Portion of the Hanford Facility Resource Conservation and Recovery Act Permit for the Treatment, Storage, and Disposal of Dangerous Waste, Part III, Operating Unit 10, 'Waste Treatment and Immobilization Plant.'"

This letter transmits the following updated system design descriptions for inclusion in the Administrative Record:

- *Lab [Analytical Laboratory] Radioactive Liquid Waste Disposal (RLD) System Design Description*, 24590-LAB-JZD-RLD-00001, Rev. 0
- *LAW [Low-Activity Waste] Container Export Handling (LEH) System Design Description*, 24590-LAW-3ZD-LEH-00001, Rev. 0
- *LAW Container Finishing Handling (LFH) System Design Description*, 24590-LAW-3ZD-LFH-00001, Rev. 0
- *LAW Melter Feed Process (LFP) and Concentrate Receipt Process (LCP) System Design Description*, 24590-LAW-3ZD-LFP-00001, Rev. 0
- *LAW Melter Handling (LMH) System Design Description*, 24590-LAW-3ZD-LMH-00001, Rev. 0
- *LAW Container Pour Handling (LPH) System Design Description*, 24590-LAW-3ZD-LPH-00001, Rev. 0.

These system design descriptions are being submitted to Washington State Department of Ecology to replace earlier versions of system descriptions that were incorporated into the Dangerous Waste Permit Administrative Record.

If you have any questions, please contact me, or your staff may contact Jan B. Bovier, Environmental Compliance Division, (509) 376-9630.

Kevin W. Smith
Manager

ECD:JBB

Attachment

cc w/attach:
B.L. Curn, BNI
B.G. Erlandson, BNI
S. Greagor, BNI
M. McCullough, BNI
S.K. Murdock, BNI
D.C. Robertson, BNI
Administrative Record (WTP H-0-8)
BNI Correspondence
Environmental Portal, LMSI

cc electronic:
R.K. Biyani, Ecology
J. Cantu, Ecology (2 hard copies)
A.S. Carlson, Ecology (6 hard copies)
T.Z. Gao, Ecology
M.E. Jones, Ecology
J.K. Perry, MSA
A.C. McKarns, RL

cc w/o attach:
J. Cox, CTUIR
R.S. Skeen, CTUIR
S.L. Dahl, Ecology
D. McDonald, Ecology
G.P. Bohnee, NPT
K. Niles, Oregon Energy
E.D. MacAlister, RL
R. Jim, YN

Attachment
16-ECD-0004
(551 Pages)

Low-Activity Waste Facility and Analytical Laboratory Facility System Design Description Documents

ISSUED BY
RPP-WTP PDC

Document title:	**Lab Radioactive Liquid Waste Disposal (RLD) System Design Description**
Document number:	24590-LAB-3ZD-RLD-00001
Revision number:	0
Type:	☒ System Design Description ☐ Facility Design Description
Originator(s):	James L. Ulrey
Checked by:	Eric Fisk
Checker's signature:	Chris Kozmak for Erik Fisk via telephone — Signature — 9/10/15 Date
Concurrence:	FOR Mark Johnson
Concurrence signature:	M PRYTHERCH — Manager of Production Engineering Signature — 9/18/15 Date
Concurrence:	Ian Milgate
Concurrence signature:	Project Technical Director and Design Authority Signature — 9/18/15 Date
Approved by:	Natalie Harkey
Approver's position:	System Engineering Manager
Approver's signature:	Natalie Harkey — Signature — 9/18/2015 Date

Validation

Appl.	Requirement Area	Requirement Developer	Signature	Date
☐	Architectural Design			
☐	Civil/Structural Design			
☑	Controls & Instrumentation Design	WAYNE WINDERHILL		7/28/15
☐	Electrical Design & AHJ			
☒	Fire Protection Engineering	BEN JOHNSON		8/10/15
☑	HVAC Design	JULIAN LEAM		08.10.15
☐	Mechanical Handling Design			
☑	Mechanical Systems Design	JULIAN LEAM		08.10.15
☑	Plant Design	John Schuette		8.4.15
☑	Process Engineering	Eric Slaathaug		8/10/15
☐	Interface (External)			
☐	Interface (Internal)			
☑	System Functions and Requirements	TILAK GANDHI		08/26/15
☑	Equipment Environmental Qual.	G. RAJAGOPAL		8-7-15
☑	Materials Engineering / Technology	Debbie ADLER		7/30/15
☐	Plant Software Design			
☑	Environmental Protection (ESH)	Roger J. Landon		8/12/15
☑	Nuclear Safety Engineering	Robert Birkenbeugh		8-4-2015
☐	Criticality Safety			
☑	Radiological Engineering	PAUL WINKLER		8/6/15
☐	Industrial Safety/Hygiene (ESH)			
☐	Mission (WTP Contract functional/performance rqmts)			
☑	Operations Requirement Document (Plant Ops)	G.F. Paradise		08/04/15
☑	Quality Assurance	CC Albin		7/28/15
☐	Safeguards & Security			
☐	Startup			
☐	Transportation & Logistics			

* Validation not required for alpha/preliminary design description documents.

History Sheet

Rev	Reason for revision	Revised by
0	Initial issue Supersedes 24590-LAB-3YD-RLD-00001, Rev. 5, *System Description for the Analytical Laboratory Radioactive Liquid Waste Disposal System.*	J. Ulrey

Contents

Validation ii

History Sheet iii

1 Introduction 1

1.1 System Identification 1

1.2 Limitations and Scope 1

1.3 Ownership and Maintenance 2

1.4 Definitions/Glossary 2

1.5 Acronyms and System Designators 4
1.5.1 Acronyms 4
1.5.2 System Designators 5

2 General Overview 6

2.1 System Functions/Safety Functions 13

2.2 System Classification 21

2.3 Operational Summary 21

3 Design Requirements 22

3.1 Requirements 22

3.2 Bases 22

3.3 References 23

3.4 General Requirements 23
3.4.1 Mission and Functional/Performance Requirements (Including States/Modes) 23
3.4.2 Nuclear Safety, ALARA, Environmental and Other Regulatory Requirements 27
3.4.3 System Interface Requirements 37
3.4.4 Other Technical, Specialty, Operations, and Maintenance Requirements 39

3.5 Vessel Requirements 47
3.5.1 Mission and Functional/Performance Requirements (Including States/Modes) 47
3.5.2 Nuclear Safety, ALARA, Environmental and Other Regulatory Requirements 49
3.5.3 System Interface Requirements 49
3.5.4 Other Technical, Specialty, Operations, and Maintenance Requirements 50

3.6 Piping Requirements 52
3.6.1 Mission and Functional/Performance Requirements (Including States/Modes) 52
3.6.2 Nuclear Safety, ALARA, Environmental and Other Regulatory Requirements 53
3.6.3 System Interface Requirements 54
3.6.4 Other Technical, Specialty, Operations, and Maintenance Requirements 54

3.7 Pump Requirements 54
3.7.1 Mission and Functional/Performance Requirements (Including States/Modes) 54
3.7.2 Nuclear Safety, ALARA, Environmental and Other Regulatory Requirements 55
3.7.3 System Interface Requirements 56
3.7.4 Technical, Specialty, Operations, and Maintenance Requirements 56

3.8 Mixing Requirements 56
3.8.1 Mission and Functional/Performance Requirements (Including States/Modes) 56
3.8.2 Nuclear Safety, ALARA, Environmental and Other Regulatory Requirements 57
3.8.3 System Interface Requirements 57

3.8.4 Other Technical, Specialty, Operations, and Maintenance Requirements 57

3.9 Monitoring & Controls 57
3.9.1 Mission and Functional/Performance Requirements (Including States/Modes) 57
3.9.2 Nuclear Safety, ALARA, Environmental and Other Regulatory Requirements 58
3.9.3 System Interface Requirements 58
3.9.4 Other Technical, Specialty, Operations, and Maintenance Requirements 59

3.10 Relevant Codes and Standards 59
3.10.1 Codes of Record 59
3.10.2 WTP Design Criteria, Design Guides, and General Specifications 60

4 System Description 63

4.1 Configuration Information 63
4.1.1 Description of System, Subsystems, and Major Components 64
4.1.2 Boundaries and Interfaces 71
4.1.3 Physical Layout and Location 74
4.1.4 Principles of Operation 75
4.1.5 System Reliability Features 75
4.1.6 System Control Features 76

4.2 Operations 82
4.2.1 Initial Configuration (Pre-startup) 82
4.2.2 System Startup 82
4.2.3 Normal Operations 82
4.2.4 Off-Normal Operations 82
4.2.5 System Shutdown 82
4.2.6 Safety Management Programs and Administrative Controls 82

4.3 Testing and Maintenance 82
4.3.1 Temporary Configurations 82
4.3.2 TSR-Required Surveillances 82
4.3.3 Non-TSR Inspections and Testing 82
4.3.4 Maintenance 83

4.4 Supplemental Information 83

5 References and Design Documents List 84

5.1 Source/Basis References 84

5.2 Other References 84

5.3 System Design Documents 85

Appendices

Appendix A - Test Objectives, Conditions and Acceptance Criteria A-1

Appendix B - Description of System Functional Flow and Interactions B-1

Appendix C - Active Safety Instruments and Functions C-1

Appendix D - System Procedures D-1

Appendix E - System History E-1

Tables

Table 3-1 Lab RLD System Equipment/Components Design Life 25
Table 3-2 Lab RLD System Seismic Design Categories 28
Table 3-3 Lab RLD System Safety Significance Categories 29
Table 3-4 Lab RLD System Interfaces 37
Table 3-5 Remotely Replaceable/Maintainable Equipment/Components 42
Table 3-6 Lab RLD System Applicable Codes & Standards 59
Table 3-7 WTP Design Criteria, Design Guides, and General Specifications Applicable to Lab RLD 60
Table 4-1 Cells and Sumps for RLD Vessels 68
Table 4-2 Pits and Sumps for RLD Pumps and Piping 68
Table 4-3 Cells, Major Equipment, Elevation, and Sumps for RLD Vessels 74
Table 4-4 Discrete (On/Off) Control for Lab RLD System 76
Table 4-5 Process Control Loops and Remote Process Indications for Lab RLD System 77
Table 4-6 Trips, Alarms, and Interlocks for Lab RLD System 78

Figures

Figure 2-1 Lab RLD C2 Subsystem Context Diagram 9
Figure 2-2 Lab RLD C3 Subsystem Context Diagram 10
Figure 2-3 Lab RLD C5 Subsystem Context Diagram 11
Figure 2-4 Lab RLD System Simplified Process Flow Diagram 12
Figure 2-5 Lab RLD – C2 Subsystem Functional Block Diagram 14
Figure 2-6 Lab RLD – C3 Subsystem Functional Block Diagram 15
Figure 2-7 Lab RLD – C5 Subsystem Functional Block Diagram 16
Figure 4-1 Lab RLD System Simplified Process Flow Diagram 63

1 Introduction

1.1 System Identification

This system design description (SDD) defines the technical and operational requirements of the Analytical Laboratory (Lab) radioactive liquid waste disposal system (RLD). This document details the current waste treatment requirements, environmental compliance requirements, and authorization basis requirements of the Lab RLD system. This SDD describes the process and functional design requirements of the Lab RLD system, including the following:

- Services and utility requirements, operating materials and supplies, and other external interfaces
- Operations limits and design bases
- Other criteria and requirements pertinent to the design of the Lab RLD system

The RLD system collects all of the liquid effluent generated within the Lab Facility including floor drains, sink drains, hotcell drains, and other drains in the various rooms and areas throughout the Lab facility. The Lab RLD system is divided into three distinct groups of equipment: the C2 RLD components, the C3 RLD components, and the C5 RLD components. Although the C2 vessel (RLD-VSL-00163) is identified as part of the RLD system, it is not a "tank system" and is not permitted to manage dangerous wastes. The dangerous waste, under normal operations, will be collected, stored, mixed, and transferred to the PT Facility plant wash drain vessel (PWD-VSL-00044). The boundaries, system interfaces, and functional description of the Lab RLD system are provided in Section 2.

1.2 Limitations and Scope

The scope of this document is to provide an authoritative source for the collected set of requirements applicable to the Lab RLD system, inclusive of interface requirements with other systems. This SDD includes requirements for the RLD sump pumps, sump level detection systems, and associated piping. The physical sumps and any coatings or liners requirements will be covered in the Lab Facility Design Description (FDD). The SDD is prepared in accordance with *24590-WTP-3DP-G04B-00093, System and Facility Design Descriptions*. The intended use of these collected requirements is to establish the following:

- Inform the Lab RLD system design effort
- Provide a validated basis upon which to confirm implementation of design requirements
- Provide the expected means of verification for requirements, including those that are post-construction (i.e., startup and commissioning test objectives and acceptance criteria)

All requirements established in this document are intended to be verified and implemented in design and/or physical configuration using a graded approach commensurate with importance and risk.

Where numeric values are provided within requirements in Section 3, these values are provided without additional margin. For example, if a value is established in 24590-WTP-DB-ENG-01-001, *Basis of Design* (BOD), no attempt is made to remove any margin that may or may not have gone into establishing that value, nor has any margin been added. Where values are stated as minimums or maximums, there is no expectation that any additional margin be applied in the verifications that the design requirements have been met. Testing that is required to be performed in accordance with external codes and standards must follow the rules established in those documents.

This document is intended to be used in support of design development, design verification, turnover, startup testing, and commissioning activities. This document will be maintained current relative to changes to source requirements documents. Updates shall be made concurrent with changes to source requirements, or implementation shall be tracked for completion in accordance with 24590-WTP-GPG-ENG-0170, *Impact Evaluation.*

Engineers are expected to use the requirements in Section 3 of this document (applies only to numerical revisions of this document) as input for design development without recourse to the upper-tier source documents or searches of the Technical Requirements Management System (TRSA). Design engineers are still required to ensure that requirements contained with the discipline/functional standards incorporated by reference in Section 3 are followed. These documents contain additional criteria that are based on applications of external codes/standards, corporate best practices, and engineering management expectations for a consistent approach to design.

Certain requirement statements in this document are preceded by a **"[HOLD]"** notation. This notation is used when there are unresolved technical issues, known inconsistencies among source requirements, or other management suspensions of work requiring resolution. Requirements with the **"[HOLD]"** notation may be used to proceed with preliminary committed design (with inclusion of appropriate holds) but shall not be used in support of fabrication or construction until the **"[HOLD]"** is removed.

The contents of Section 4 are being developed in a phased approach in support of future operations and maintenance. At this revision, only the contents of Sections 4.1.1 through 4.1.4 and 4.1.6 have been updated and verified. Sections 4.1.5, 4.2, 4.3 and 4.4 are currently reserved and will be updated in a later phase after the work to support completion of these sections has been completed.

Appendix D and Appendix E are reserved to document system procedures and system history. Additional appendices may be added in the future as needed.

1.3 Ownership and Maintenance

The Design Authority (DA) organization is responsible for preparation and maintenance of this document through turnover of the included systems to Operations. Thereafter, maintenance of this document is the responsibility of the Plant Engineering organization; however, the Engineering DA organization retains responsibility for the establishment and definition of design requirements.

1.4 Definitions/Glossary

Ancillary Equipment. Any device such as, but not limited to, piping, fittings, flanges, valves, and pumps, used to distribute, meter, or control the flow of dangerous waste from its point of generation to a tank system, between dangerous waste storage tanks, to a point of disposal on-site, or to a point of disposal or shipment offsite. [BOD]

C2 Area. C2 areas are radiological buffer areas that typically consist of non-process operating areas, equipment rooms, stores, access corridors, and plan room. [BOD]

C3 Contamination Area. C3 areas are the process areas where the potential for direct contact with radioactive material, contaminated systems and components, or both, exists. [BOD]

C5 Airborne Radioactivity Area. C5 areas are highly contaminated areas that require total enclosure to ensure contamination control.

Cell. Concrete structure also containing complex mechanical and/or process equipment with radiation levels generally prohibiting personnel access. Cells usually do not have viewing windows or manipulators, but use remotely operated cranes for removal and installation of jumpers and equipment components. Cells contain vessels, pumps, jumpers, and instrumentation.

Confinement. For consistency, regardless of usage elsewhere, confinement is used in this document to denote the controls used to prevent or minimize the release or migration of airborne contaminants, including aerosols, hazardous vapors, or gases.

Containment. For consistency, regardless of usage elsewhere, containment is used in this document to denote the controls used to prevent or minimize the release or migration of liquid or liquid-entrained contaminants.

Floor Drain Collection Subsystem (Lab RLD C2 Subsystem). A waste collection vessel system in the Analytical Laboratory Facility that handles nonradioactive, non-dangerous liquid (NLD) effluents.

Hotcell Drain Collection Subsystem (Lab RLD C5 Subsystem). A 'tank system' in the Analytical Laboratory Facility that handles high level radioactive, dangerous liquid (RLD) effluents.

Pit. Structural compartment that houses maintainable equipment in a segregated location where the equipment is readily accessible for maintenance and remote manual operation, the area can be readily decontaminated to support maintenance activities, and the equipment is shielded from high radiation fields emanating from the vessels.

Primary Confinement/Containment. The structures, systems, or components (SSC) and their associated boundaries that confine or contain airborne and liquid contaminants under normal conditions.

RLD Pumps. A pair of pumps in each of the Lab RLD subsystems that perform three subsystem functions: 1) mix and recirculate vessel effluents; 2) transfer effluents from the vessel to other locations; and 3) move the contents of the sump of the vessel cell (including leakage) into the vessel. The subsystem pumps are as follows:

C2 Subsystem	C2 RLD Pumps	RLD-PMP-00190A/B
C3 Subsystem	C3 RLD Pumps	RLD-PMP-00182A/B
C5 Subsystem	C5 RLD Pumps	RLD-PMP-00183A/B

Secondary Confinement/Containment. The SSCs or other design features that capture and prevent further spread or migration of airborne or liquid contaminants after they have escaped primary confinement/containment.

Sink Drain Collection Subsystem (Lab RLD C3 Subsystem). A 'tank system' in the Analytical Laboratory Facility that handles low level radioactive, dangerous liquid (RLD) effluents.

Tank System. A dangerous waste handling storage or treatment tank and its associated ancillary equipment and containment system (WAC 173-303-040).

Vault. Concrete structures also containing complex mechanical and/or process equipment. Vaults contain vessels, pumps, jumpers, and instrumentation.

1.5 Acronyms and System Designators

1.5.1 Acronyms

ALARA	As Low As Reasonably Achievable
ASME	American Society of Mechanical Engineers
ASTM	American Society for Testing and Materials
BOD	Basis of Design
BOF	Balance of Facilities
COM	Commissioning
CON	Construction
CTN	Component Tag Number
CDI	Configuration Data Index
DA	Design Authority
DIW	Demineralized Water (from the Demineralized Water System)
DOE	US Department of Energy
DOW	Domestic (potable) Water
ENG	Engineering
ESH	Environmental Safety & Health
ETF	Effluent Treatment Facility
FDD	Facility Design Description
GTC	General Test Criteria
HP	Health Physics
HVAC	Heating, Ventilation, and Air Conditioning
HEPA	High Efficiency Particulate Air
ICN	Integrated Control Network
IQRPE	Independent, Qualified, Registered Professional Engineer
ISM	Integrated Safety Management
Lab	Analytical Laboratory
LAW	Low-Activity Waste (Facility)
LERF	Liquid Effluent Retention Facility
Ops	Operations Department
ORD	Operations Requirements Document
PDSA	Preliminary Documented Safety Analysis
PIBOD	Process Inputs Basis of Design
PSV	Pressure Safety Valve
PT	Pretreatment (Facility)
PVA	Process Vacuum Air System
QL	Quality Level
RPP	Radiation Protection Program
ROIN	Requirement Object Identification Number

SDD	System Design Description
SQR	Supplier Quality Representative
SS	Safety Significant
SU	Startup
SUB	Subcontractor
SUP	Supplier
SSC	Structures, Systems, or Components
TAC	Test Acceptance Criteria
TEDF	Treated Effluent Disposal Facility
TME	Tank Mixing Eductors
TRSA	Technical Requirements Management System
TWDVC	Through Wall Devices
WAC	Washington (State) Administrative Code
WTP	Hanford Tank Waste Treatment and Immobilization Plant

1.5.2 System Designators

AHL	Analytical Hotcell Laboratory Equipment System
ARL	Analytical Radiological Laboratory Equipment System
ASX	Autosampling System
C2V	C2 Ventilation System
C3V	C3 Ventilation System
C5V	C5 Ventilation System
CHW	Chilled Water System
DIW	Demineralized Water System
DOW	Domestic (potable) Water System
FPW	Fire Protection Water System
LIH	Laboratory In-cell Handling System
LVE	Low Voltage Electrical System (480V and below)
NLD	Non-radioactive Liquid Waste Disposal System
PCJ	Process Control System
PSA	Plant Service Air System
PWD	Plant Wash and Disposal System
RLD	Radioactive Liquid Waste Disposal System

2 General Overview

The Lab RLD system encompasses all vessels, instrumentation, pumps, valves, mixers, transfer pump pits, piping pits, cells, and other ancillary equipment associated with the collection and transfer of liquid found within the Analytical Laboratory. The functional purpose is to collect the liquid effluents for interim storage before transferring the effluents to the Pretreatment (PT) Facility plant wash vessel for further processing or the nonradioactive liquid waste disposal (NLD) system in the balance of facilities (BOF).

The Lab RLD system is divided into three distinct component groups, or subsystems: the Floor Drain Collection Subsystem (C2), the Sink Drain Collection Subsystem (C3), and the Hotcell Drain Collection Subsystem (C5). Various operations such as collecting, storing, mixing, and sampling of the effluents are performed in the subsystems as required.

Floor Drain Collection Subsystem (C2 Subsystem)

The C2 Lab RLD components include the floor drain collection vessel (RLD-VSL-00163) and associated components for collecting, sampling, and transferring liquid effluent from the following major sources during routine and non-routine operations:

- Rad Lab corridor floor drains
- Janitor closet sink and floor drains
- C5 filter/fan room floor drains
- C2 hotcell corridor floor drains
- Eyewash & safety shower – C2 floor drains
- Fire water discharge in the event of a fire
- C2 maintenance shop floor drain systems
- ASX vacuum pump room drains
- C2 and C3 filter/fan room floor drains
- Health Physics (HP) personnel decon room floor drains
- Waste drum management floor drains
- Clean drum export floor drains
- Floor drain collection vessel sump

The vessel is located in the fire water vault under the C3 filter/fan room in the Lab. The vessel and vault are maintained under negative pressure by a connection to the C2 ventilation system to vent any emissions generated. The vault contains a sump area to collect any vessel overflow or leakage. The floor drain collection vessel pumps (RLD-PMP-00190A/B) provide for sampling and transfer of vessel and sump contents.

A liquid heel is maintained in the vessel. During cold commissioning, the floor drain collection vessel (RLD-VSL-00163) may discharge to a tanker truck. After commissioning and when the effluent is acceptable to the BOF, the C2 Subsystem vessel will be discharged to the BOF collection tank (NLD-TK-00001). Sampling capability of the vessel is provided by a grab sample from the discharge of the vessel pumps.

Alternately, if the BOF Facility cannot accept the effluents, the effluents may be transferred to the Laboratory area sink drain collection vessel (RLD-VSL-00164). After the PT Facility becomes operational and the C5 Subsystem is on line, the effluents may also be transferred to hotcell drain collection vessel (RLD-VSL-00165).

Sink Drain Collection Subsystem (C3 Subsystem)

The C3 Lab RLD components include the Laboratory area sink drain collection vessel (RLD-VSL-00164) and associated components for collecting, preparing, sampling, and transferring liquid streams from the following sources during routine and non-routine operations:

- Rad Lab sinks
- Rad Lab fume hood sinks
- C2 Lab RLD vessel (RLD-VSL-00163)
- Decon room showers and sinks
- Process vacuum pump skid
- Hotcell maintenance access area drain
- C3 maintenance shop floor/sink drains
- ASX equipment drains
- C3 pump pit sump

The Laboratory area sink drain collection vessel (RLD-VSL-00164) is located in the C3 Effluent Vessel Cell under the C3 filter/fan room in the Lab. The vessel and cell are maintained under a negative pressure by a connection to the C5V system. The cell contains a sump area to collect any vessel overflow or leakage. The Laboratory area sink drain collection vessel pumps (RLD-PMP-00182A/B) provide for mixing of vessel contents to keep solids suspended, and discharging vessel and sump contents. The pumps are located in a single pit at a mezzanine level within the vessel cell and above the vessel.

A liquid heel is maintained in the vessel. During cold commissioning, the vessel may discharge to a tanker truck. After the PT Facility is brought on line, the vessel contents will be transferred to the hotcell drain collection vessel (RLD-VSL-00165). Wash rings are provided for vessel, vessel cell, and pump pit washing with Demineralized Water (DIW). The vessel is equipped with level instrumentation, mixing eductors, and spray rings.

Hotcell Drain Collection Subsystem (C5 Subsystem)

The C5 Lab RLD components include the hotcell drain collection vessel (RLD-VSL-00165) and associated components for collecting, mixing, and transferring liquid streams from the following sources during routine and non-routine operations:

- Hotcell floor drains
- C2 Lab RLD vessel (RLD-VSL-00163)
- C3 Lab RLD vessel (RLD-VSL-00164)
- Hotcell glovebox drains
- Hotcell transfer port drains
- C3 decontamination booth drain
- C5 pump and valve pit sumps
- Lab area sink drain collection vessel sump
- Hotcell drain collection vessel pit sump

The vessel is located in the C5 Effluent Vessel Cell under the C5 pump maintenance room in the Lab. The vessel and cell are ventilated by the C5V system. Cell access is controlled by the Radiation Protection Program (RPP).

The hotcell drain collection vessel pumps (RLD-PMP-00183A/B) are provided for mixing of vessel contents, to keep solids suspended, and for discharging vessel contents and sump contents. Pumps RLD-PMP-00183A/B are self-priming, horizontal centrifugal pumps located in pits above the vessel cell. To prevent cross-contamination of the DIW system, a backflow preventer (RLD-BFP-00001) is provided in the DIW line for flushing of the discharge lines from the hotcell drain collection vessel pumps.

The C5 Subsystem will be isolated and not operational until the PT Facility is on line. During cold commissioning, the hotcell drain collection vessel (RLD-VSL-00165) may discharge to a tanker truck. Under normal operating conditions, a liquid heel is maintained in the vessel. At that time, the primary destination for discharging the vessel and sump contents is the PT Facility plant wash drain vessel (PWD-VSL-00044). Wash rings are provided for vessel, vessel cell, and pump/valve pit washings with demineralized water. The vessel is also equipped with level instrumentation and mixing eductors.

Subsystem Context Diagrams

Figures 2-1, 2-2, and 2-3 are context diagrams depicting the three Lab RLD subsystems. These figures highlight the flow paths of the process effluents and the interrelationships of the Lab RLD subsystems with other systems and utilities. Blue arrows are used in these figures to highlight the flow path of the process effluent and the black arrows illustrate the supporting systems and utilities. The diagram does not differentiate among some utilities that have both normal and safety service provision. The diagrams are used in support of functional and performance definitions at the system level.

System Simplified Process Flow Diagram

Figure 2-4 is a simplified process flow diagram of the overall Lab RLD system. See Section 1.5 for a list of acronyms and relevant system designators.

Figure 2-1 Lab RLD C2 Subsystem Context Diagram

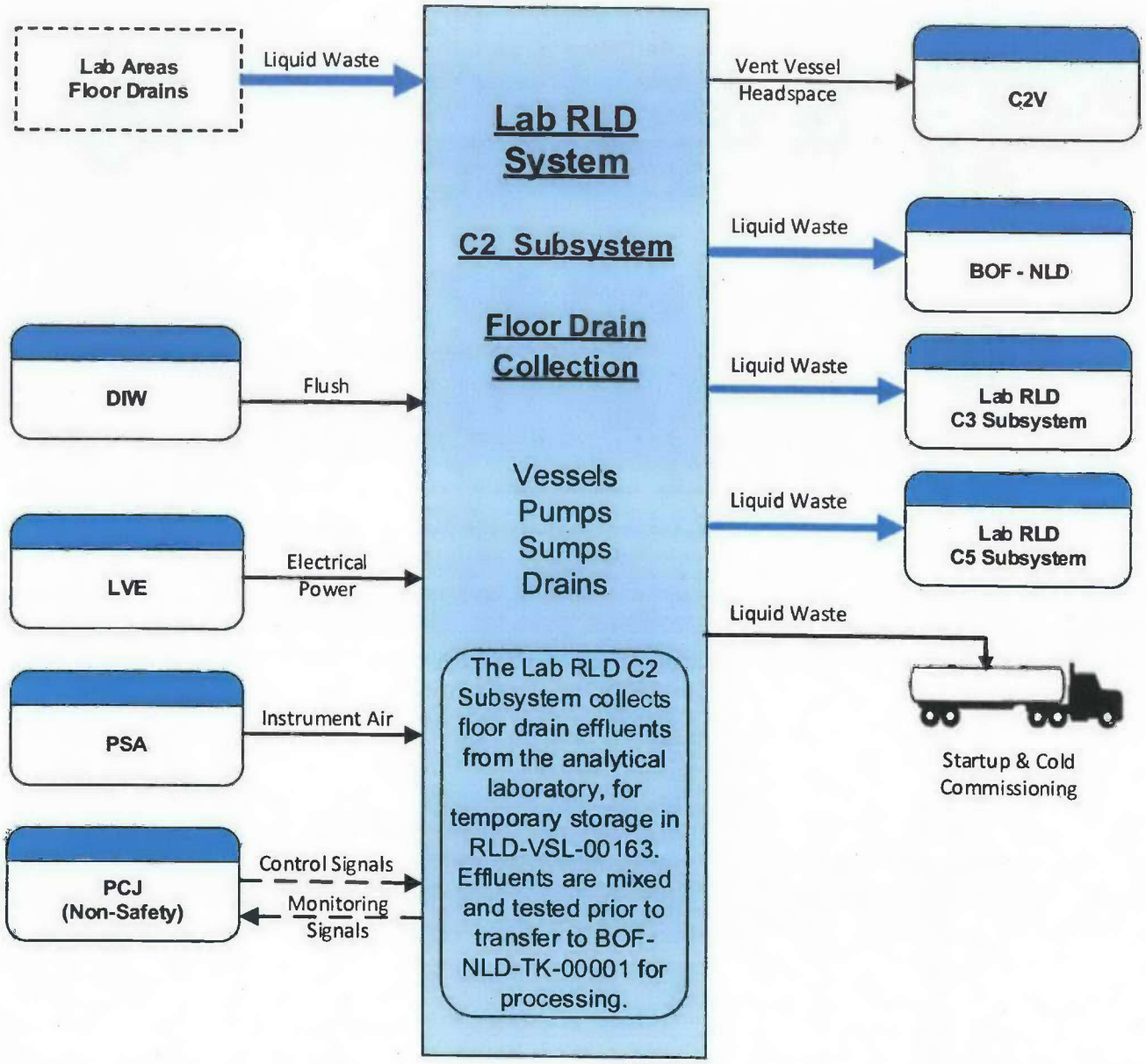

Figure 2-2 Lab RLD C3 Subsystem Context Diagram

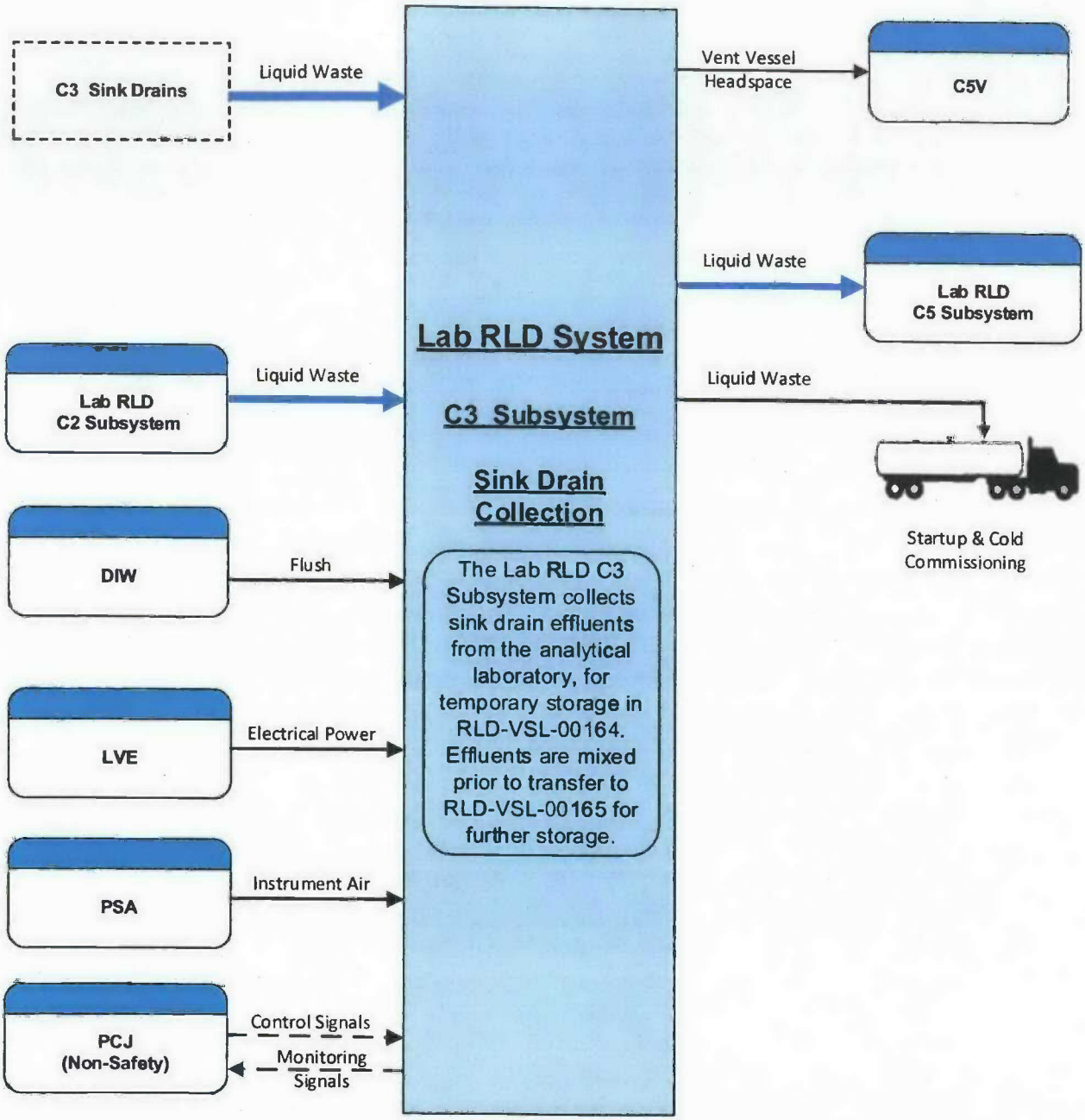

Figure 2-3 Lab RLD C5 Subsystem Context Diagram

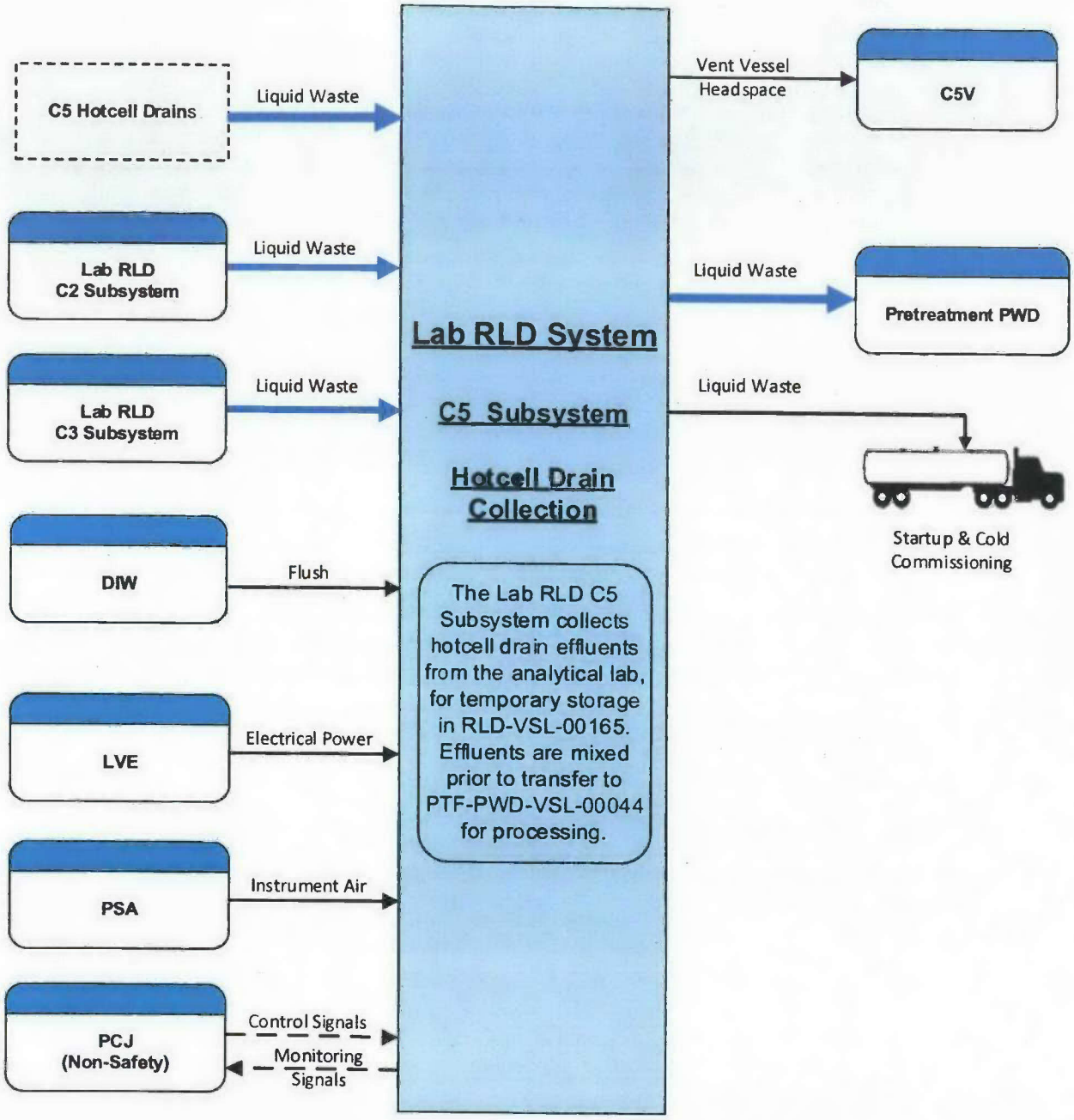

Figure 2-4 Lab RLD System Simplified Process Flow Diagram

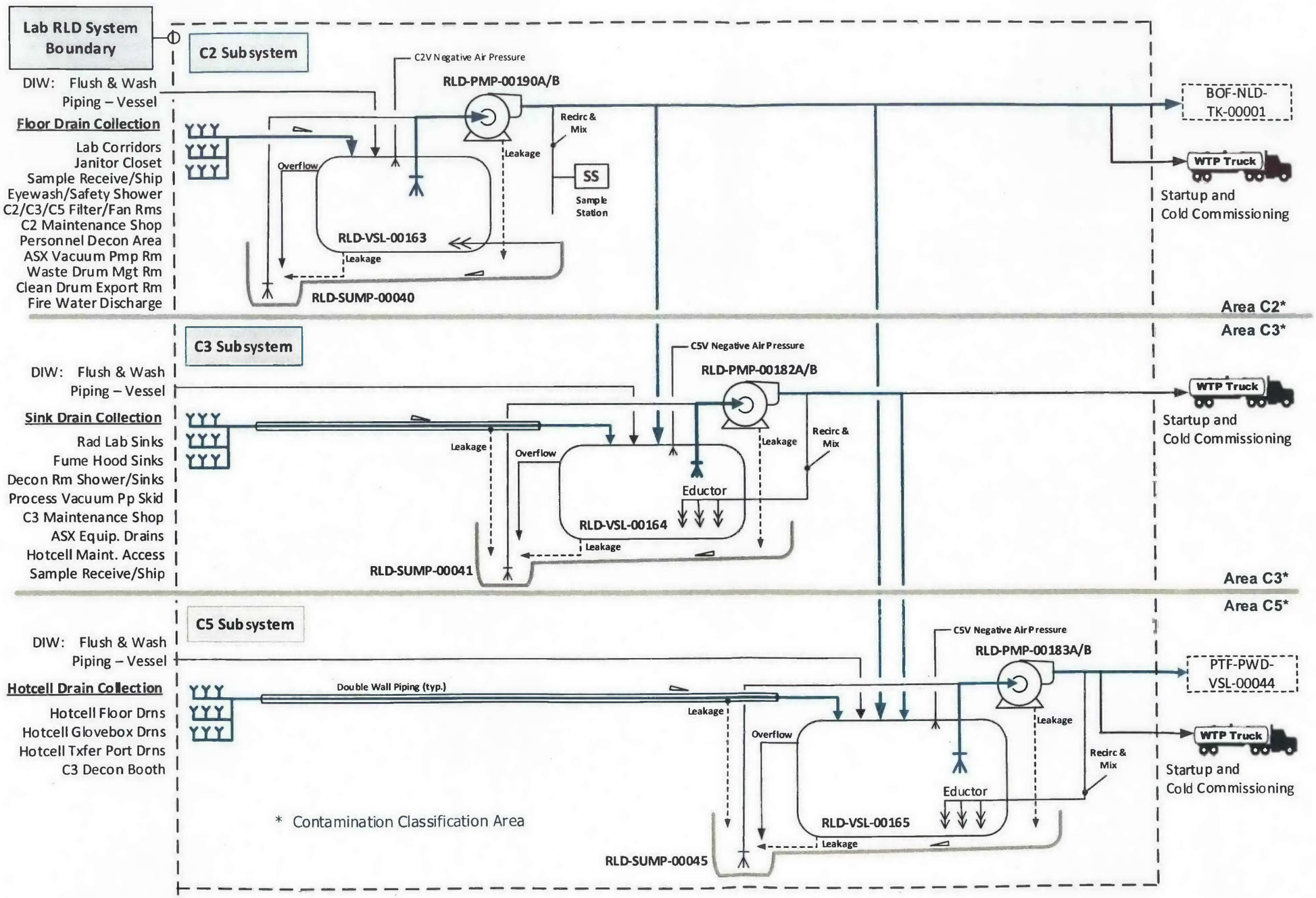

2.1 System Functions/Safety Functions

This section defines the Lab RLD functions and attributes that need to be addressed by the system design. Figures 2-5, 2-6, and 2-7 provide the functional block diagrams for the three Lab RLD subsystems. Each figure indicates the internal and external systems and utilities that provide the primary support or interface for that subsystem's respective functions. Section 3 provides the design and performance requirements to meet both functional and other requirements.

System interfaces are provided for reference only. Except where a level of interface with the facility needs to be defined, no attempt is made in this document to define system level functions, performance, or design requirements. See Section 1.5 for the list of relevant system designators.

Lab RLD vessels RLD-VSL-00163/-00164/-00165 reduce the probability of a radioactive material release by providing confinement.

Figure 2-5 Lab RLD – C2 Subsystem Functional Block Diagram

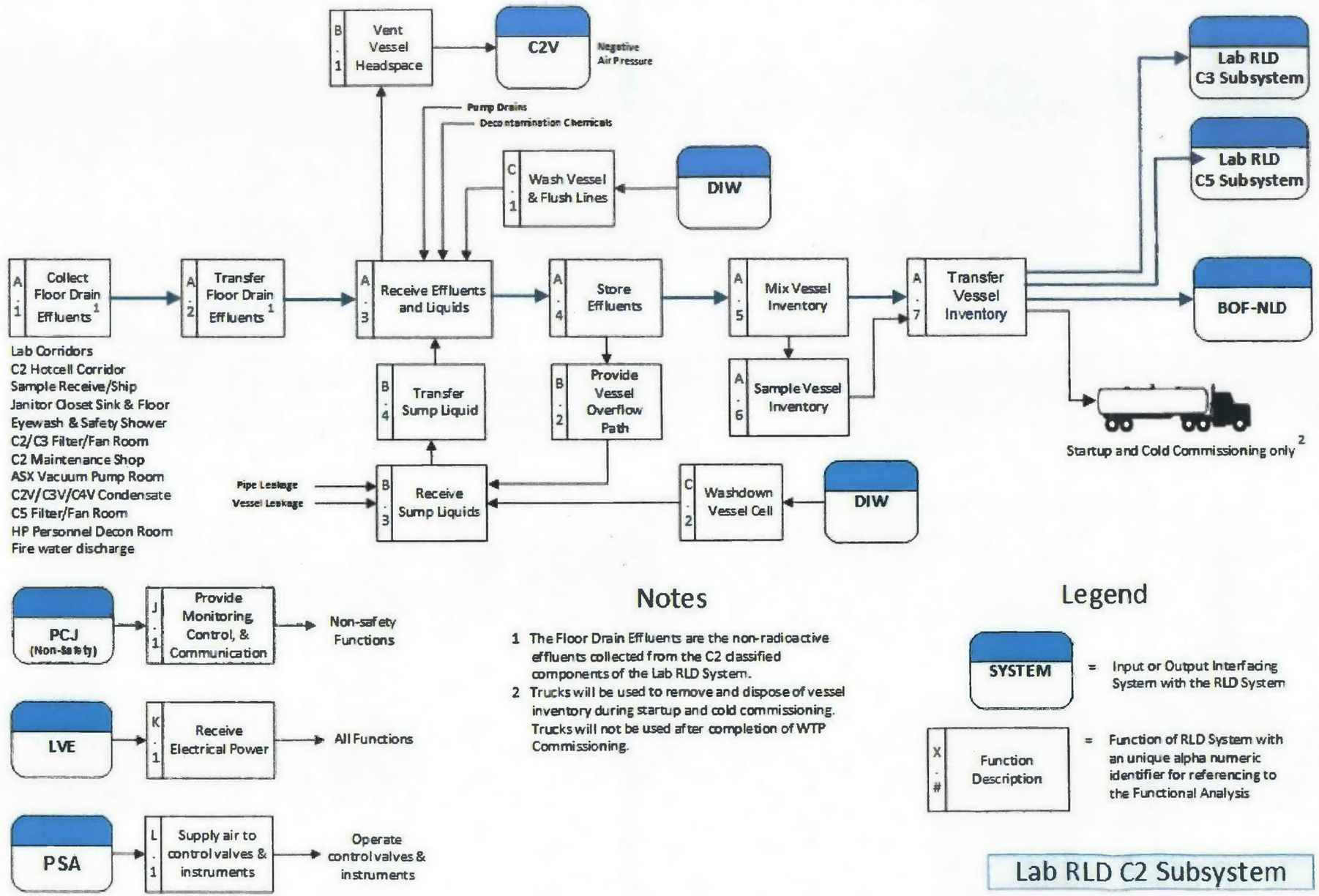

Figure 2-6 Lab RLD – C3 Subsystem Functional Block Diagram

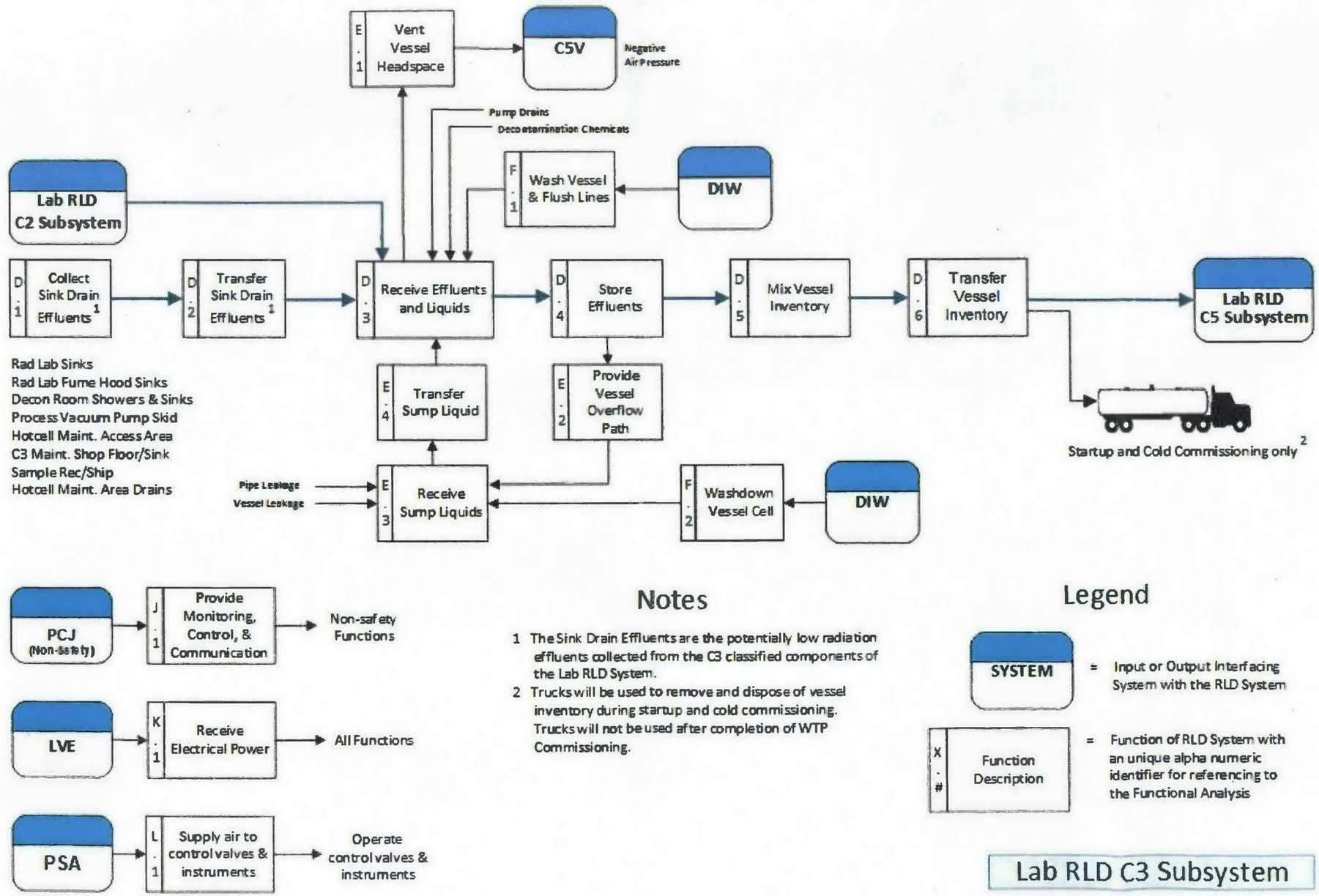

Figure 2-7 Lab RLD – C5 Subsystem Functional Block Diagram

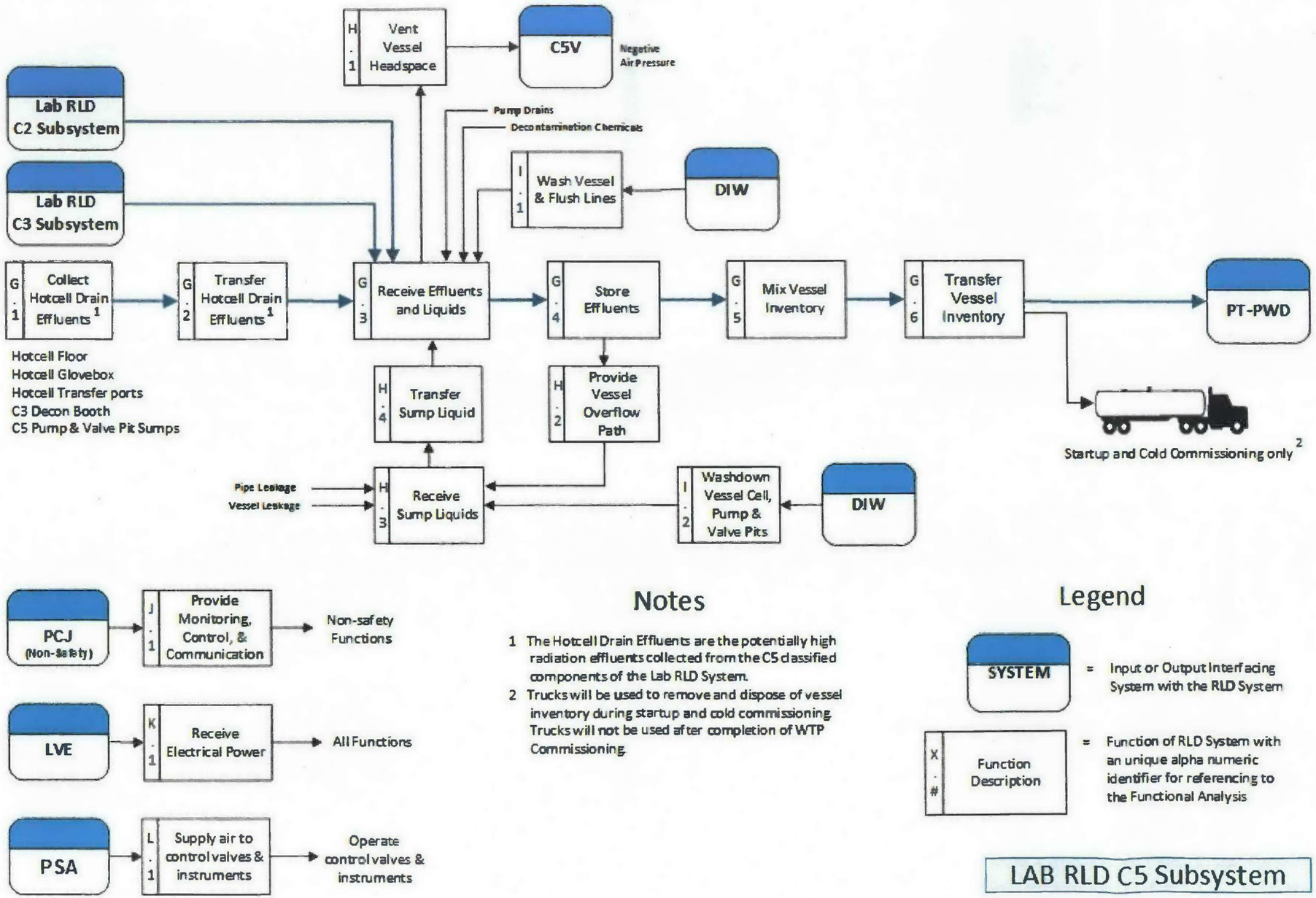

The functions included in Figures 2-5, 2-6, and 2-7 are the primary and secondary level functions of the Lab RLD system. These functions are further described in Table 2-1. The requirement section number provides the location of the applicable functions analysis incorporated into system requirements. Appendix B provides a further decomposition of the system functions, including initiating, terminating, and integrating events and functions.

Table 2-1: Lab RLD System Functional Analysis & Crosswalk to Requirements

Floor Drain Collection Functional Areas A. through C. relate to Figure 2-5: Lab RLD – C2 Subsystem Functional Block Diagram This waste collection vessel system handles nonradioactive, non-dangerous liquid (NLD) effluents.		
Reference	**Functional Analysis Description**	**Requirement Section No.**
A.	**Collect, store, and transfer all non-radioactive C2 effluents**	**N/A**
A.1	Collect Floor Drain Effluents	3.4.1.1.1, 3.4.1.1.2, 3.5.1.1.2
A.2	Transfer Floor Drain Effluents - Floor-drain effluents and condensate are gravity drained (free-drained) in multiple headers to vessel RLD-VSL-00163:	3.4.1.1.2, 3.4.4.4.5, 3.6.1.3
A.3	Receive Effluents and Liquids in RLD-VSL-00163 • Receive process effluents and liquids • Receive Sump Liquids • Receive wash water from flushed lines and vessel wash • Receive negative air pressure from C2V System	3.4.1.1.2, 3.4.1.1.3, 3.4.3.1.3, 3.5.1.1.2
A.4	Store Effluents – Effluents received in RLD vessel RLD-VSL-00163 are temporarily stored until the inventory is sufficient to warrant transfer to the NLD tank in BOF.	3.4.1.1.2, 3.5.1.1.1, 3.5.4.1.3
A.5	Mix Vessel Inventory – Mixing of the vessel inventory is performed to suspend insoluble solids and to blend liquids. Transfer pumps RLD-PMP-00190A/B mix the inventory fluids by drawing suction from the vessel and returning the inventory via the recirculation line.	3.5.4.1.3, 3.8.1.1, 3.8.1.2
A.6	Sample Vessel Inventory – While the vessel inventory is being mixed/recirculated, grab samples may be taken from the discharge of the recirculation line. Sampling of each batch is not required, and is not a process "hold" point for analytical results.	3.5.3.1
A.7	Transfer Vessel Inventory – Mixed effluent is batch transferred to the NLD tank in BOF for processing.	3.4.1.1.3, 3.4.4.4.5, 3.5.3.3, 3.6.1.2, 3.6.1.3
B.	**Provide Vessel Vent, Headspace, and Overflow**	**N/A**
B.1	Vent Vessel Headspace -	3.5.4.1.3
B.2	Provide Vessel Overflow Path – The RLD vessel is equipped with an overflow line. Vessel RLD-VSL-00163 overflows into RLD-SUMP-00040.	3.5.1.1.2, 3.5.4.1.1, 3.5.4.1.2
B.3	Receive Sump Liquids – From vessel overflow, pipe leakage, vessel leakage, and pump leakage.	3.5.1.1.2
B.4	Transfer sump liquid -	3.7.1.1

Table 2-1: Lab RLD System Functional Analysis & Crosswalk to Requirements

	From the RLD-SUMP-00040 to Vessel RLD-VSL-00163.	
C.	**Wash Vessel and Piping**	**N/A**
C.1	Wash Vessel and Flush Lines – With demineralized water.	3.4.4.4.4, 3.4.4.4.5, 3.5.1.1.2, 3.5.3.2
C.2	Washdown Vessel Cell – With demineralized water.	3.5.1.1.2, 3.5.3.2
Sink Drain Collection Functional Areas D. through F. relate to Figure 2-6: Lab RLD – C3 Subsystem Functional Block Diagram This 'tank system' handles low level radioactive, dangerous liquid (RLD) effluents.		
Reference	**Functional Analysis Description**	**Requirement Section No.**
D.	**Collect, store, and transfer all low-radiation C3 effluents**	**N/A**
D.1	Collect Sink Drain Effluents Provide secondary containment devices, slope, and drain	3.4.1.1.1, 3.4.1.1.2, 3.4.2.2.1, 3.4.2.2.3, 3.4.2.2.5, 3.4.2.2.6, 3.4.2.2.7, 3.5.1.1.3, 3.6.2.1.1
D.2	Transfer Sink Drain Effluents - Sink-drain effluents are gravity drained (free-drained) in multiple headers to vessel RLD-VSL-00164 Provide secondary containment devices, slope, and drain	3.4.1.1.2, 3.4.2.2.1, 3.4.2.2.3, 3.4.2.2.5, 3.4.2.2.6, 3.4.2.2.7, 3.4.4.4.5, 3.6.1.3, 3.6.2.1.1, 3.6.2.1.2
D.3	Receive Effluents and Liquids In RLD-VSL-00164 • Receive process effluents and liquids • Receive Sump Liquids • Receive wash water from flushed lines and vessel wash • Receive negative air pressure from C5V System Provide secondary containment devices, slope, and drain	3.4.1.1.2, 3.4.2.2.1, 3.4.2.2.3, 3.4.2.2.4, 3.4.2.2.5, 3.4.2.2.6, 3.4.2.2.7, 3.4.3.1.3, 3.5.1.1.3
D.4	Store Effluents – Effluents received in RLD vessel RLD-VSL-00164 are temporarily stored until the inventory is sufficient to warrant transfer to RLD-VSL-00165. Provide secondary containment devices, slope, and drain	3.4.1.1.2, 3.4.1.1.3, 3.4.2.2.1, 3.4.2.2.3, 3.4.2.2.4, 3.4.2.2.6, 3.4.2.2.7, 3.5.1.1.1, 3.5.4.1.3
D.5	Mix Vessel Inventory – Mixing of the vessel inventory is performed to suspend insoluble solids and to blend liquids. Transfer pumps RLD-PMP-00182A/B mix the inventory fluids by drawing suction from the vessel and returning the inventory via the recirculation line. Additional mixing is achieved with eductors terminating the recirculation line in the vessel. Provide secondary containment devices, slope, and drain	3.4.2.2.1, 3.4.2.2.3, 3.4.2.2.4, 3.4.2.2.5, 3.4.2.2.6, 3.4.2.2.7, 3.5.4.1.3, 3.8.1.1, 3.8.1.2

Table 2-1: Lab RLD System Functional Analysis & Crosswalk to Requirements

D.6	Transfer Vessel Inventory – Mixed effluent is batch transferred to the RLD vessel RLD-VSL-00165 Provide secondary containment devices, slope, and drain	3.4.1.1.3, 3.4.2.2.1, 3.4.2.2.3, 3.4.2.2.5, 3.4.2.2.6, 3.4.2.2.7, 3.4.2.2.10, 3.4.4.4.5, 3.5.3.1, 3.6.1.2, 3.6.1.3, 3.6.2.1.2
E.	**Provide Vessel Vent, Headspace, and Overflow**	**N/A**
E.1	Vent Vessel Headspace -	3.5.4.1.3
E.2	Provide Vessel Overflow Path – The RLD vessel is equipped with an overflow line. Vessel RLD-VSL-00164 overflows into RLD-SUMP-00041.	3.4.2.2.1, 3.4.2.2.3, 3.4.2.2.6, 3.5.1.1.3, 3.5.4.1.1, 3.5.4.1.2
E.3	Receive Sump Liquids – From vessel overflow, pipe leakage, vessel leakage, and pump leakage. Provide secondary containment devices, slope, and drain. Provide leak detection and removal system	3.4.2.2.1, 3.4.2.2.3, 3.4.2.2.5, 3.4.2.2.6, 3.4.2.2.7, 3.4.2.2.8, 3.4.2.2.9, 3.5.1.1.3
E.4	Transfer Sump Liquid – From the RLD-SUMP-00041 to Vessel RLD-VSL-00164. Provide secondary containment devices, slope, and drain	3.4.2.2.1, 3.4.2.2.3, 3.4.2.2.5, 3.4.2.2.6, 3.4.2.2.7, 3.7.1.1
F.	**Wash Vessel and Piping**	**N/A**
F.1	Wash Vessel and Flush Lines – With demineralized water.	3.4.4.4.4, 3.4.4.4.5, 3.5.1.1.3, 3.5.3.2
F.2	Washdown Vessel Cell – With demineralized water.	3.5.1.1.3, 3.5.3.2
Hotcell Drain Collection Functional Areas G. through I. relate to Figure 2-7: Lab RLD – C5 Subsystem Functional Block Diagram This 'tank system' handles high level radioactive, dangerous liquid (RLD) effluents.		
Reference	**Functional Analysis Description**	**Requirement Section No.**
G.	**Collect, store, and transfer all high-radiation C5 effluents**	**N/A**
G.1	Collect Hotcell Effluents Provide secondary containment devices, slope, and drain	3.4.1.1.1, 3.4.1.1.2, 3.4.2.2.1, 3.4.2.2.3, 3.4.2.2.5, 3.4.2.2.6, 3.4.2.2.7, 3.5.1.1.4, 3.6.2.1.1
G.2	Transfer Hotcell Drain Effluents - Hotcell effluents are gravity drained (free-drained) in multiple headers to vessel RLD-VSL-00165 Provide secondary containment devices, slope, and drain	3.4.1.1.2, 3.4.2.2.1, 3.4.2.2.3, 3.4.2.2.5, 3.4.2.2.6, 3.4.2.2.7, 3.4.4.4.5, 3.6.1.3, 3.6.2.1.1, 3.6.2.1.2

Table 2-1: Lab RLD System Functional Analysis & Crosswalk to Requirements

G.3	Receive Effluents and Liquids – In RLD-VSL-00165 • Receive process effluents and liquids • Receive Sump Liquids • Receive wash water from flushed lines and vessel wash • Receive negative air pressure from C5V System Provide secondary containment devices, slope, and drain	3.4.1.1.2, 3.4.2.2.1, 3.4.2.2.3, 3.4.2.2.4, 3.4.2.2.5, 3.4.2.2.6, 3.4.2.2.7, 3.4.3.1.3, 3.4.4.4.3, 3.5.1.1.4, 3.6.2.1.2
G.4	Store effluents – Effluents received in vessel RLD-VSL-00165 are temporarily stored until the inventory is sufficient to warrant transfer to the Pretreatment Facility. Provide secondary containment devices, slope, and drain	3.4.1.1.2, 3.4.1.1.3, 3.4.2.2.1, 3.4.2.2.3, 3.4.2.2.4, 3.4.2.2.6, 3.4.2.2.7, 3.5.1.1.1, 3.5.4.1.3
G.5	Mix Vessel Inventory – Mixing of the vessel inventory is performed to suspend insoluble solids and to blend liquids. Transfer pumps RLD-PMP-00183A/B mix the inventory fluids by drawing suction from the vessel and returning the inventory via the recirculation line. Additional mixing is achieved with eductors terminating the recirculation line in the vessel. Provide secondary containment devices, slope, and drain	3.4.2.2.1, 3.4.2.2.3, 3.4.2.2.4, 3.4.2.2.5, 3.4.2.2.6, 3.4.2.2.7, 3.5.4.1.3, 3.8.1.1, 3.8.1.2
G.6	Transfer Vessel Inventory – Mixed effluent is batch transferred to the Pretreatment Facility Provide secondary containment devices, slope, and drain	3.4.1.1.3, 3.4.2.2.1, 3.4.2.2.3, 3.4.2.2.5, 3.4.2.2.6, 3.4.2.2.7, 3.4.2.2.10, 3.4.4.4.5, 3.5.3.1, 3.5.3.4, 3.6.1.2, 3.6.1.3, 3.6.2.1.2
H.	**Provide Vessel Vent, Headspace, and Overflow**	**N/A**
H.1	Vent Vessel Headspace -	3.5.4.1.3
H.2	Provide Vessel Overflow Path – The RLD vessel is equipped with an overflow line. Vessel RLD-VSL-00165 overflows into RLD-SUMP-00045.	3.4.2.2.1, 3.4.2.2.3, 3.4.2.2.5, 3.4.2.2.6, 3.5.1.1.4, 3.5.4.1.1,3.5.4.1.2
H.3	Receive Sump Liquids – From vessel overflow, pipe leakage, vessel leakage, and pump leakage. Provide secondary containment devices, slope, and drain Provide leak detection and removal system	3.4.2.2.1, 3.4.2.2.3, 3.4.2.2.5, 3.4.2.2.6, 3.4.2.2.7, 3.4.2.2.8, 3.4.2.2.9, 3.5.1.1.4
H.4	Transfer Sump Liquid – From the RLD-SUMP-00045 to the Pretreatment Facility. Provide secondary containment devices, slope, and drain	3.4.2.2.1, 3.4.2.2.3, 3.4.2.2.5, 3.4.2.2.6, 3.4.2.2.7, 3.7.1.1
I.	**Wash Vessel and Piping**	**N/A**
I.1	Wash Vessel and Flush Lines – With demineralized water.	3.4.4.4.4, 3.4.4.4.5 3.5.1.1.4, 0
I.2	Wash down Vessel Cell, Pump & Valve Pit – With demineralized water.	3.5.1.1.4, 0

Table 2-1: Lab RLD System Functional Analysis & Crosswalk to Requirements

Common Interface/Support Systems to all Subsystems **Functional Areas J. through L.**		
Reference	**Functional Analysis Description**	**Requirement Section No.**
J.	**Provide Monitoring, Control, and Communication Functions**	**N/A**
J.1	PCJ – Provide Monitoring, Control and Communications - • Sump Level • Vessel Level	3.4.2.2.8, 3.4.2.2.9, 3.9.1.1.1, 3.9.1.1.2, 3.9.1.2.1, 3.9.3.1
K.	**Receive Electrical Power**	**N/A**
K.1	Receive electrical power - The low voltage electrical (480V AC) system (LVE) provides electrical power to the RLD pump systems as well as controls and instrumentation.	3.4.3.1.2
L.	**Supply Air to Control Valves and Instruments**	**N/A**
L.1	Supply Air to Control Valves and Instruments The Plant Service Air System (PSA) provides compressed air as the motive force to manipulate pneumatically operated valves and instruments in the system.	3.6.3.1

2.2 System Classification

The Lab RLD system contains components with the following classifications/designations:

- ☐ Safety Class
- ☒ Safety Significant
- ☒ Dangerous Waste Permit affecting
- ☐ Air Permit affecting
- ☐ Waste Acceptance Impacting
- ☒ General

2.3 Operational Summary

A basic operational overview of the Lab RLD system is described in the opening pages of Section 2. This includes functional descriptions of its three subsystems, corresponding context diagrams, and a simplified process flow diagram of the entire system. Sections 2.1 provides functional block diagrams for the subsystems and descriptions of the subsystem functions. Detailed operational information is provided in Section 4.

The Lab RLD system is located in the Lab Facility of the Hanford Tank Waste Treatment and Immobilization Plant (WTP). The Lab RLD system is comprised of three subsystems, classified C2, C3, and C5 according to the radiological classifications of the areas within the boundaries they serve. Each subsystem has a piping network, a storage vessel, and a pair of pumps.

The C2 subsystem collects liquid waste via a floor drain line network and stores the effluents in RLD-VSL-00163. The C3 subsystem collects liquid waste via a sink drain line network and stores the effluents in RLD-VSL-

00164. The C5 subsystem collects liquid waste from hot cells, glove boxes, and other equipment associated with the hot cells via a piping network and stores the effluents in RLD-VSL-00165. Various operations such as mixing, transferring, and sampling of the effluent are performed by the system as required. The C2 subsystem effluents classified non-radioactive are periodically transferred to the NLD storage tank in BOF. The radioactive effluents are ultimately transferred to the PT Facility, where the waste is recycled into the process or transferred to the Liquid Effluent Retention Facility/Effluent Treatment Facility for final treatment and disposal.

3 Design Requirements

3.1 Requirements

Requirements are documented in Sections 3.4 through 3.10. Each requirement statement is accompanied by a basis discussion (as needed) and the expected means of verification. Requirements must be met in design. If a requirement stated in this document cannot be met in design, then a revision to the requirement needs to be pursued, if possible, or the design must be changed to meet the requirement.

Requirements preceded by "**[HOLD]**" may only be used in support of preliminary or committed design, which shall also be issued with appropriate holds per procedure 24590-WTP-3DP-G04B-00046, *Engineering Drawings*. Requirements preceded by "**[HOLD]**" may not be used in support of fabrication or construction.

The following abbreviations are used to designate the selected method for verification (see 24590-WTP-GPG-ENG-0161, *Technical Requirements Management*, for additional guidance concerning methods of verification):

(I) Inspection
(A) Analysis
(D) Demonstration
(T) Test

The following abbreviations are used to designate the organization responsible for performing the verification:

(COM) Commissioning
(CON) Construction
(ENG) Engineering
(ESH) Environmental Safety & Health
(IQRPE) Independent Qualified Registered Professional Engineer
(Ops) Operations
(SU) Startup
(SUB) Subcontractor
(SUP) Supplier

3.2 Bases

Basis discussions are provided as needed to explain the decomposition or interpretation from the originating source requirement(s). Where a **[HOLD]** has been applied to a requirement, this section will include the basis for the "HOLD".

3.3 References

The requirements include a source document reference and a DOORS® Unique Identification Numbers (hereafter referred to as Identification Numbers or IDs). Each unique source document reference, with ID number(s), is bracketed separately. Requirements may include a reference to the Section 2.1, Functional Description, listed in parentheses following the source document and ID number references.

A complete listing of all source references may be found in Section 5.1.

3.4 General Requirements

The following General Requirements apply to the C2, C3 and C5 Subsystems, unless otherwise noted.

3.4.1 Mission and Functional/Performance Requirements (Including States/Modes)

3.4.1.1 The Lab RLD Liquid Waste Collection, Classification, and Disposal

3.4.1.1.1 Liquid Waste Collection

Requirement: The Lab RLD system shall collect the liquid effluents from the liquid drain areas of the Lab Facility. [Sections 10.3.4, 10.6.3, ORD, [ID : WTP-RPT-OP-01-001 ID#1253, ID : WTP-RPT-OP-01-001 ID#1228]] (A.1, D.1, G.1)

Basis Discussion: Liquid sources include the following: floor drains, cupsink and fume hood sink drains, hot cell and glovebox drains, decontamination wash drains, miscellaneous Lab drains, and other room drains.

Verification: Verification is expected to be achieved through the following:

Verif. Method	Verif. By	Plan	Notes/Comments
I	ENG	Review design to verify drains are identified and routed to the Lab RLD storage tanks RLD-VSL-00163, 00164, and 00165.	

3.4.1.1.2 Liquid Waste Classification

Requirement: Collected Lab RLD system liquid waste shall be routed and stored according to the contamination classification areas of the Lab facility: areas C2, C3, and C5. Under normal conditions, the non-radioactive waste liquids are collected and stored in the C2 Subsystem, the low level contaminated liquids are collected in the C3 subsystem and high level contaminated liquids are collected in the C5 Subsystem. [Section 5.1.2, BOD, [ID : DB-ENG-01-001 ID#10259]] [Section 20.0, ORD, [WTP-RPT-OP-01-001 ID#1723]] (A.1, A.2, A.3, A.4, D.1, D.2, D.3, D.4, G.1, G.2, G.3, G.4)

Basis Discussion: The areas within the Lab are classified according to their potential for contamination, as well as the anticipated contamination levels. The Lab RLD system is subdivided based on the contamination classifications of the C2, C3, and C5 areas as provided in Table 5-2 of the BOD. [ALARA]

Verification: Verification is expected to be achieved through the following:

Verif. Method	Verif. By	Plan	Notes/Comments
I	ENG	Review design against area classifications and verify drains are identified and routed to the appropriate Lab RLD storage tanks RLD-VSL-00163, 00164, and 00165.	

3.4.1.1.3 Liquid Waste Disposal

Requirement: The Lab RLD liquid wastes shall be disposed of in accordance with the contamination classification of the area of each vessel. [Section 10.3.4, ORD, [ID : RPT-OP-01-001 ID#1228]] (A.4, A.7, D.4, D.6, G.4, G.6)

Basis Discussion: The vessel in the C2 classified area is RLD-VSL-00163; the vessel in the C3 classified area is RLD-VSL-00164; and the vessel in the C5 classified area is RLD-VSL-00165.

Under normal operating conditions, non-radioactive waste liquids are collected in the C2 Subsystem and routed to the BOF NLD System for disposal.

After the PT Facility is brought on line, the contaminated wastes will be collected in both C3 and C5 Subsystems and ultimately routed to the Pretreatment Facility for processing and disposal. [ALARA]

Verification: Verification is expected to be achieved through the following:

Verif. Method	Verif. By	Plan	Notes/Comments
I	ENG	Review liquid disposal paths for the C2 Subsystem and verify the C2 Subsystem non-radioactive waste is connected to the BOF NLD System.	
I	ENG	For operation of the C3 Subsystem, review liquid disposal paths for the C3 Subsystem and verify that the transfer line from the C3 vessel to the C5 vessel is lined up and available.	
I	ENG	For operation of the C5 Subsystem, review liquid disposal paths for the C5 Subsystem and verify the connection to the PT Transfer Pipe is lined up and available and that the transfer lines to the C5 vessel from the C2 and C3 Subsystems are lined up and available.	

3.4.1.2 Design Life

3.4.1.2.1 Design (Operating) Life

Requirement: Non-replaceable, permanent Lab Facility RLD system plant equipment listed in Table 3-1 shall be designed for a minimum design life of 40 years, inclusive of maintenance. All non-maintainable items of Lab Facility RLD system equipment shall be designed to last the life of the facility (40 years). Design life of equipment shall consider the effects of chemical, radiological and thermal exposure. [Sections 11.1.1, 11.4.1, 11.7.4, 11.8.3, 5.3.1, BOD, [ID : DB-ENG-01-001 ID#11367], [ID : DB-ENG-01-001 ID#11368], [ID : DB-ENG-01-001 ID#11427], [ID : DB-ENG-01-001 ID#11528], [ID : DB-ENG-01-001 ID#11545], [ID : RPT-OP-01-001 ID#1743], [ID : DB-ENG-01-001 ID#12695], [ID : RPT-OP-01-001 ID#1522] [Sections 2, 14.1, Appendix A, ORD, [ID : RPT-OP-01-001 ID#936, ID : RPT-OP-01-001 ID#1743, ID : RPT-OP-01-001 ID#1779, ID : RPT-OP-01-001 ID#1780, ID : RPT-OP-01-001 ID#1781, ID : RPT-OP-01-001 ID#1782], [ID : RPT-OP-01-001 ID#1463]

Table 3-1 Lab RLD System Equipment/Components Design Life

Equipment/Component Description	Design Life (Years)
RLD-VSL-00163 Floor Drain Collection Vessel	40
RLD-VSL-00164 Sink Drain Collection Vessel	40
RLD-VSL-00165 Hot Cell Drain Collection Vessel	40
Eductors	40
Overflow Features	40
Lab RLD piping	40

Basis Discussion: Equipment and material selection is based on proven performance, value engineering principles, and fit-for-function principles. The selection of equipment and materials is further addressed in detail as the design progresses. Equipment design needs to consider the routine environmental exposures under normal operations for non-safety equipment; safety equipment also considers abnormal and emergency exposures—this minimizes the need for equipment maintenance, exposure, and radiological waste generation in radiological areas. [ALARA]

Verification: Verification is expected to be achieved through the following:

Verif. Method	Verif. By	Plan	Notes/Comments
I	ENG	Review design to verify design life of non-replaceable, non-maintainable SSCs is documented in procurement documents and supported by supplier certificates of conformance.	May be documented in an assessment/evaluation.

3.4.1.2.2 Materials of Construction and Erosion/Corrosion Design Parameters

Requirement: The Lab RLD system shall be designed to include allowance for erosion/corrosion and use of materials of construction in accordance with Section 3.4.1.2.1 of this SDD. [Section 11.9, BOD, [ID : DB-ENG-01-001 ID#11572]] [Sections 14.2, 20, ORD, [ID : DB-ENG-01-001 ID#1475, ID : RPT-OP-01-001 ID#1726]]

Basis Discussion: The allowance for erosion/corrosion and applicable materials of construction are limited to those components that come into contact with the process fluids and that are required to maintain confinement/containment of those process fluids. Materials of construction that can withstand the erosive/corrosive low-activity waste effluents and chemicals are selected. The materials for the Lab Facility RLD system equipment and components should be selected based on the stream data presented in the process corrosion data sheet report. If vessel washing via internal spray mechanisms is needed to prevent or minimize corrosion, the operational limitation shall be identified in the vessel corrosion evaluation. Refer to Tables A-26, B-16, B-17; 24590-WTP-DB-PET-09-001, Process Inputs Basis of Design (PIBOD); and 24590-WTP-M4C-V11T-00024, WTP Process Flowsheet Mass & Energy Balance Analysis for Input to Material Selection Assessments, for the fluid characteristics of the process streams.

The Lab RLD system streams are accounted for in the erosion and corrosion analyses and are fabricated with materials of construction that can withstand the radioactive, thermal, and erosive/corrosive environment caused by the material. Design and verification is expected to be to the most recent issued revisions of the listed corrosion evaluations. If vessel washing via internal spray mechanisms is needed to prevent or minimize corrosion, the operational limitations are identified in the vessel corrosion evaluation.

Details of the allowed materials and corrosion allowances can be found in:

- 24590-LAB-N1D-RLD-00001, RLD-VSL-00163 *(Lab) Floor Drain Collection Vessel (RLD C2 Vessel)*
- 24590-LAB-N1D-RLD-00002, RLD-VSL-00164 *(Lab) Lab Area Sink Drain Collection Vessel (RLD C3 Vessel)*
- 24590-LAB-N1D-RLD-00003, RLD-VSL-00165 *(Lab) Hotcell Drain Collection Vessel*
- 24590-LAB-N1D-RLD-00004, RLD-PMP-00182A/B *(Lab) Lab Area Sink Drain Collection Vessel Pump with Bowl Drain*
- 24590-LAB-N1D-RLD-00005, RLD-PMP-00183A/B *(Lab) Hotcell Drain Collect. Vessel Pump (with Bowl Drain)*

Verification: Verification is expected to be achieved through the following:

Verif. Method	Verif. By	Plan	Notes/Comments
A/I	ENG	Perform an analysis/inspection of materials used in the Lab Facility RLD system, which are in contact with the process fluids and are required to maintain confinement or containment of the process fluids, to verify that they are acceptable for use in the operating environment and have adequate erosion and corrosion allowances.	
I	ENG	Verify materials required by the analysis are used in the design.	

3.4.1.2.3 Non-maintainable Soft or Nonmetallic Parts

Requirement: The system equipment and components in the C5 cell and pit areas of the Lab RLD System shall be designed with no non-removable soft or nonmetallic parts that could be affected by the total integrated radiation dose, including gamma and beta. [Section 16.4.1.1, BOD, [ID: DB-ENG-01-001 ID#12770]], [Section 14.1, ORD, [ID : RPT-OP-01-001 ID#1463]]

Basis Discussion: This requirement is applicable to equipment in C5 area cell (including the pump and piping pits). Soft or nonmetallic parts can be affected by radiation and lose their capability to perform in this environment. The design target is for there to be no non-replaceable soft parts in the C5 Cell area. The C5 pumps and some C5 valves are the only known components in the C5 area with soft parts. These pumps and valves, however, are all replaceable.

This is an ALARA impacting requirement because if components fail, they will have to be replaced and may result in dose to personnel or contamination issues.

[ALARA]

Verification: Verification is expected to be achieved through the following:

Verif. Method	Verif. By	Plan	Notes/Comments
A	ENG	Prepare an analysis of potential equipment in C5 areas and verify no non-removable soft parts.	May be documented in an assessment/evaluation.
I	ENG	Review the following: - equipment datasheets to verify design requirements for non-safety equipment are documented	

3.4.1.2.4 Room Environment Conditions for Non-safety Structures, Systems, or Components

Requirement: The Lab Facility RLD system equipment and components tagged non-safety shall be designed to operate and withstand the internal environment conditions of the Lab Facility. [Section 12, BOD, [ID : DB-ENG-01-001 ID#13175], [ID : DB-ENG-01-001 ID#13176], [ID : DB-ENG-01-001 ID#13180]] [Sections 11.16, 16.1, ORD, [ID : RPT-OP-01-001 ID#1373], [ID : RPT-OP-01-001 ID#1606]]

Basis Discussion: Non-safety SSCs are designed to function as intended in the room environment conditions associated with their location. [ALARA]

Verification: Verification is expected to be achieved through the following:

Verif. Method	Verif. By	Plan	Notes/Comments
I	ENG	Review design of non-safety SSCs to verify compliance with BOD Table 12-1 conditions.	

3.4.1.2.5 Continuous Operability

Requirement: The Lab Facility RLD system equipment and components that are subject to extreme service conditions and could fail during operations shall be designed for safe recovery, replacement, and/or redundancy to achieve 40 years design life. [Sections 11.3.2, 11.4.2, 16.4.1.1, BOD, [ID : DB-ENG-01-001 ID#11392], [ID : DB-ENG-01-001 ID#11434], [ID : DB-ENG-01-001 ID#12744]] [Section 14.1, Appendix A, ORD, [ID : RPT-OP-01-001 ID#1463, [ID : RPT-OP-01-001 ID#17433]]

Basis Discussion: None

Verification: Verification is expected to be achieved through the following:

Verif. Method	Verif. By	Plan	Notes/Comments
I	ENG	Review to verify that design/installation addresses the needed recovery, replacement, and/or redundancy features.	

3.4.2 Nuclear Safety, ALARA, Environmental and Other Regulatory Requirements

3.4.2.1 Equipment Safety Requirements

3.4.2.1.1 Seismic Design

Requirement: The Lab RLD system equipment shall be designed and qualified for seismic conditions in accordance with Table 3-2 below: [Section 11.7.3, BOD, [ID : DB-ENG-01-001 ID#11524], [ID : DB-ENG-01-001 ID#13215]] [Sections 5.6.3, 4.4.3.3, 4.4.2.4.5, Appendix 3A, Table 3A-6, PDSA-Lab Facility, [ID : WTP-PSAR-ESH-01-002-06 ID#10759], [ID : WTP-PSAR-ESH-01-002-06 ID#10772], [ID : WTP-PSAR-ESH-01-002-06 ID#11407], [ID : WTP-PSAR-ESH-01-002-06 ID#11408], [ID : WTP-PSAR-ESH-01-002-06 ID#11410]] [Safety Criteria 4.1-3, SRD, [ID : SRD-ESH-01-001-02 ID#1519]]

Table 3-2 Lab RLD System Seismic Design Categories

Equipment/Component Description	Seismic Category	Reference
C5 effluent vessel cell	SC-III	Table 3A-6, PDSA-Lab
Transfer line from the C3 cell to the C5 cell	SC-III	Table 3A-6, PDSA-Lab
Transfer line to the PT facility (in C5 vessel cell boundary)	SC-III	Table 3A-6, PDSA-Lab
Exterior jacket on the hotcell gloveboxes drain lines	SC-III	Table 3A-6, PDSA-Lab
Lab facility basemat (confinement for the embedded C5 drain lines	SC-III	Table 3A-6, PDSA-Lab

Basis Discussion: 24590-WTP-PSAR-ESH-01-002-01, Preliminary Documented Safety Analysis to Support Construction Authorization; General Information, states "All components and parts of the equipment that provide or contribute to the safety functions and accident monitoring functions, including equipment supports and

anchorage, shall be qualified accordingly." This qualification ensures SSCs meet the designated seismic design requirements. Safety Criterion 4.1-3 in the safety requirements document (SRD) details the equivalence of the WTP seismic category to the seismic performance category of DOE-STD-1020-94, Natural Phenomena Hazards Design and Evaluation Criterial for Department of Energy Facilities. The SRD also states that SSCs designated as safety SSCs be designed to withstand the effects of natural phenomena hazard events (e.g., earthquakes, wind, and floods) without loss of capability to perform specified safety functions.

Verification: Verification is expected to be achieved through the following:

Verif. Method	Verif. By	Plan	Notes/Comments
A/T	ENG/SUP	Analysis or test performed on SSCs to demonstrate capability to withstand seismic event.	This is expected to be documented in the equipment qualification packages.
I	ENG	Review of design to verify conformance to the results of the analysis requirements and to verify that the function(s) established in the PDSA is (are) correctly reflected in the equipment qualification documents.	May be accomplished by equipment qualification packages or separate assessment.

3.4.2.1.2 Safety Criteria Designations

Requirement: The Lab RLD system SSCs shall be designated as Safety SSCs in accordance with Table 3-3 below. [Sections 3.3.6.4, 3.3.6.5, 3.3.6.6, 4.4.2, 4.4.3.1, 4.4.3.3, 5.3.2, Appendix 3A, Table 3A-6, Appendix 4A, Table 4A-1, PDSA-Lab Facility, [ID : WTP-PSAR-ESH-01-002-06 ID#10768], [ID : WTP-PSAR-ESH-01-002-06 ID#10772], [ID : WTP-PSAR-ESH-01-002-06 ID#10810], [ID : WTP-PSAR-ESH-01-002-06 ID#11399], [ID : WTP-PSAR-ESH-01-002-06 ID#11406], [ID : WTP-PSAR-ESH-01-002-06 ID#11407], [ID : WTP-PSAR-ESH-01-002-06 ID#11408], [ID : WTP-PSAR-ESH-01-002-06 ID#11409], [ID : WTP-PSAR-ESH-01-002-06 ID#11410]] [Safety Criteria 4.1-2, 4.4-1, SRD, [ID : SRD-ESH-01-001-02 ID#35], [ID : SRD-ESH-01-001-02 ID#53]]

Table 3-3 Lab RLD System Safety Significance Categories

Equipment/Component Description	Safety Function	Safety Classification
C5 effluent vessel cell	Provide confinement to radioactive mixed waste	Safety Significant
Transfer line from the C3 cell to the C5 cell	Provide confinement to radioactive mixed waste	Safety Significant
Transfer line to the PT facility (within the C5 vessel cell boundary)	Provide confinement to radioactive mixed waste	Safety Significant
Exterior jacket on the hotcell gloveboxes drain lines	Provide confinement to radioactive mixed waste	Safety Significant
Lab facility basemat (confinement for the embedded C5 drain lines	Provide confinement to radioactive mixed waste	Safety Significant

Basis Discussion: None

Verification: Verification is expected to be achieved through the following:

Verif. Method	Verif. By	Plan	Notes/Comments
I	ENG	Review design to verify that safety designations and safety function, as established in the PDSA, are correctly reflected in the RLD system.	Document in Equipment Qualification Packages. Document in the design verification report.

3.4.2.1.3 Room Environmental Conditions for Safety SSCs

Requirement: The safety equipment in the Lab RLD system credited with any safety function(s) shall be designed and qualified to perform their safety function(s) as intended in the environment conditions associated with the events for which they are intended to respond, inclusive of aging effects, throughout their qualified life. [Section 11.7.3, BOD, [ID : DB-ENG-01-001 ID#11524], [ID : DB-ENG-01-001 ID#11526]] [Safety Criteria 4.1-3, 4.4-1, SRD, [ID : SRD-ESH-01-001-02 ID#35], [ID : SRD-ESH-01-001-02 ID#53]]

Basis Discussion: SSCs designated as safety significant (SS) are designed and qualified to perform their safety function(s) as intended in the room environment conditions associated with the events for which they are intended to respond. The effects of aging on normal and abnormal functioning are considered in design and qualification. Analytical Laboratory (Lab) Room Environment Data Sheet (24590-LAB-U0D-W16T-00001) identifies environmental conditions for rooms that house safety SSCs.

Verification: Verification is expected to be achieved through the following:

Verif. Method	Verif. By	Plan	Notes/Comments
A/T	ENG	Perform analysis or testing to verify the ability of the SSCs credited with a safety function to withstand specified environmental conditions.	Document in equipment qualification package. See 24590-LAB-U0D-W16T-00001, LAB, *Room Environment Data Sheet* for room environment conditions.
I	ENG	Review the design to verify conformance to the as-tested or as-analyzed configuration.	Document in an evaluation/assessment or EQP.

3.4.2.1.4 Maintainable Equipment Location

Requirement: Components that require a high degree of maintenance or service shall be placed out-cell. Valve power actuators shall be operated through the wall (or floor or ceiling) and be maintained external to the cells. Equipment and Instruments requiring personnel access for periodic calibration or maintenance shall be located in areas where personnel exposures are ALARA. [Sections 7.1, 9.1, ORD, [ID : DB-ENG-01-001 ID#11421], [ID : RPT-OP-01-001 ID#1186]] [ID : RPT-OP-01-001 ID#1106]

Basis Discussion: The components that require a high degree of maintenance or service are placed out-cell, to the extent practical, where personnel have access for hands-on maintenance activities. [ALARA]

Verification: Verification is expected to be achieved through the following:

Verif. Method	Verif. By	Plan	Notes/Comments
I	ENG	Review design to verify equipment components, including valve actuators, requiring a high degree of maintenance, calibration, or service are located out-cell.	Document equipment in list with identity of acceptable locations.

3.4.2.2 Dangerous Waste Tank Systems

DWP Tank System and Ancillary Equipment design requirements are divided between the Lab RLD SDD and the Lab FDD. Design criteria requirements located in the FDD focus on foundation, secondary containment, and leak detection systems associated with the Lab physical structure. The Lab RLD tank system related design criteria requirements are provided in this SDD.

3.4.2.2.1 Dangerous Waste Tank System Design Requirements

Requirement: The Lab Facility vessels (RLD-VSL-00164 and RLD-VSL-00165) and ancillary equipment that handle dangerous waste shall be designed in accordance with the requirements for tank system design and integrity assessments as identified in WAC 173-303-640. [Section 14.10.1, BOD, ID : DB-ENG-01-001 ID#12137, ID : DB-ENG-01-001 ID#12138, ID : DB-ENG-01-001 ID#12139, ID : DB-ENG-01-001 ID#12140, ID : DB-ENG-01-001 ID#12141, ID : DB-ENG-01-001 ID#12144, ID : DB-ENG-01-001 ID#12145] (D.1, D.2, D.3, D.4, D.5, D.6, E.2, E.3, E.4, G.1, G.2, G.3, G.4, G.5, G.6, H.2, H.3, H.4)

- Specify the handling or installation procedures to protect the integrity of the tank system. The procedures should prevent or detect the following defects:
  - weld breaks (WAC 173-303-640 [3][c][i])
  - punctures (WAC 173-303-640 [3][c][ii])
  - scrapes of protective coatings (WAC 173-303-640 [3][c][iii])
  - cracks (WAC 173-303-640 [3][c][iv])
  - corrosion (WAC 173-303-640 [3][c][v])
  - other structural damage or inadequate construction or installation (WAC 173-303-640[3][c][vi])
- Specify and document the remedies for any handling or installation procedure discrepancies identified before the tank system is covered, enclosed, or placed in use. (WAC 173-303-640[3][c])
- Specify that all tank system components be tested for tightness prior to being covered, enclosed, or placed in use. (WAC 173-303-640[3][e])
- Specify that the proper installation of the tank system and system components including corrosion protection systems be documented and certified by experts (that is, an independent qualified installation inspector, or an independent registered professional engineer trained and experienced in tank installation) in such system installations. (WAC 173-303-640[3][g])
- Design ancillary equipment in such a way that it is supported and protected against physical damage and excessive stress due to settlement, vibration, expansion, or contraction. Procedures described in American Petroleum Institute (API) Recommended Practice 1615, *Installation of Underground Petroleum Storage Systems* (API 1996a) or ANSI Standard B31.3, *Liquid Petroleum Transportation Piping Systems* (ANSI 1987) may be used as guidance where applicable. (WAC 173-303-640[3][f])

- Design the tank system to prevent escape of vapors, fumes, or other emissions into the air if the tank holds materials that are acutely or chronically toxic by inhalation. (WAC 173-303-640[5][e])
- Provide the means to ensure that waste is not placed into a tank that has contained incompatible waste until the tank has been decontaminated. (WAC 173-303-640[10])
- Additional tank system design requirements are found in the Lab FDD.

Basis Discussion: A tank system, as defined in WAC 173-303-040, means a dangerous waste storage or treatment tank and its associated ancillary equipment and secondary containment system. Requirements for tank system design and integrity assessments are identified in WAC 173-303-640.

Vessels RLD-VSL-00164 and RLD-VSL-00165 of the Lab RLD system are dangerous waste vessels.

Verification: Verification is expected to be achieved through the following:

Verif. Method	Verif. By	Plan	Notes/Comments
I	ENG	Review IQRPE Reports to verify tank system design (tank, ancillary equipment, and secondary containment) are in accordance with established codes and standards in the BOD (derived directly from WAC requirements).	Document in IQRPE report in accordance with BOD (WAC) requirements

3.4.2.2.2 Spill Prevention Controls Design

Requirement: The appropriate controls shall be used to prevent spills and overflows from tank or containment systems. [Section 14.10.1.1, BOD, ID : DB-ENG-01-001 ID#12150, ID : DB-ENG-01-001 ID#12151, ID : DB-ENG-01-001 ID#12153, ID : DB-ENG-01-001 ID#12154]

- Provide spill prevention controls (for example, check valves, dry-disconnect couplings). (WAC 173-303-640[5][b][i])
- Provide overfill prevention controls (for example, level sensing devices, high-level alarms, automatic feed cutoff, pressure-sensing devices, or bypass to a standby tank). (WAC 173-303-640[5][b][ii])
- Mark the tank systems with signs or labels that are visible at a distance for 50 feet, where routine personnel access is required. (WAC 173-303-640[5][d])
- Provide signs or labels with a legend identifying the material within the tank system, to warn employees, emergency response personnel, and the public of major risks associated with the material. (WAC 173-303-640[5][d])
- Additional spill prevention design requirements are found in the Lab FDD.

Basis Discussion: None
Verification: Verification is expected to be achieved through the following:

Verif. Method	Verif. By	Plan	Notes/Comments
I	IQRPE	Review IQRPE Report to verify tank system spill prevention control design per established codes and standards in the BOD.	Document in IQRPE report in accordance with WAC requirements

3.4.2.2.3 Secondary Containment System Design

Requirement: The Lab Facility tanks (RLD-VSL-00164 and RLD-VSL-00165) and ancillary equipment that handle dangerous waste shall have secondary containment to prevent a migration of wastes or accumulated liquid out of the system. Secondary containment shall be in the form of approved devices such as: vaults and liners for vessels; double walled piping for piping systems; and pits with liners for pumps and valves. [Sections 11.3.5.2, 14.10.1.2, 14.10.1.3, BOD, [ID : DB-ENG-01-001 ID#11416], [ID : DB-ENG-01-001 ID#12156], [ID : DB-ENG-01-001 ID#12173] [Sections 10.4, 14.3, ORD, [ID : RPT-OP-01-001 ID#1238], [Section 14.10.1.2, BOD, [ID : DB-ENG-01-001 ID#12157]] (D.1, D.2, D.3, D.4, D.5, D.6, E.2, E.3, E.4, G.1, G.2, G.3, G.4, G.5, G.6, H.2, H.3, H.4)

Basis Discussion: Additional secondary containment requirements are found in the Lab FDD. [ALARA]**Verification:** Verification is expected to be achieved through the following:

Verif. Method	Verif. By	Plan	Notes/Comments
I	ENG	Review design to verify approved secondary containment devices are provided: vaults and liners for vessels; double walled piping for piping systems; and pits with liners for pumps and valves.	

3.4.2.2.4 Secondary Containment Design for Vaults

Requirement: Vaults used as secondary containment shall comply with the following: [Section 14.10.1.2.2, BOD, [ID : DB-ENG-01-001 ID#12162], [ID : DB-ENG-01-001 ID#12163], [ID : DB-ENG-01-001 ID#12165], [ID : DB-ENG-01-001 ID#12166], [ID : DB-ENG-01-001 ID#12167]](D.3, D.4, D.5, G.3, G.4, G.5)

- Provide a means to protection against the formation of ignition of vapors within the vault if the waste is being stored or treated (WAC 173-303-640[4][e][ii][E]):
  - Meets the definition of ignitable waste under WAC 173-303-090(5) or
  - Meets the definition of reactive waste under WAC 173-303-090(7) and may form an ignitable or explosive vapor.
- Additional vault requirements are found in the Lab FDD.

Basis Discussion: Vaults are synonymous with process cells or tank/vessel cell.

Verification: Verification is expected to be achieved through the following:

Verif. Method	Verif. By	Plan	Notes/Comments
I	IQRPE	An IQRPE shall review the design to verify all requirements for vaults within the Lab have been met.	Document in IQRPE report prepared in accordance with WAC requirements

3.4.2.2.5 Secondary Containment Design for Ancillary Equipment

Requirement: The secondary containment for ancillary equipment shall be designed to the following: [Section 14.10.1.3, BOD, ID : DB-ENG-01-001 ID#12175] (D.1, D.2, D.3, D.5, D.6, E.3, E.4, G.1, G.2, G.3, G.5, G.6, H.2, H.3, H.4)

- Prevent any migration of wastes or accumulated liquid out of the system to the soil, ground water, or surface water at any time during the use of the tank system (WAC 173-303-640[4][b][i])
- Detect and collect releases and accumulated liquids until the collected material is removed (WAC 173-303-640[4][b][ii])
- Be constructed of material that is compatible with the waste to be placed in the tank system (WAC 173-303-640[4][c][i])
- Provide sufficient strength and thickness to prevent failure owing to:
  - Pressure gradients, including static head and external hydrological forces
  - Physical contact with the waste
  - Climatic conditions
  - The stress of daily operation, including stresses from nearby vehicle traffic (WAC 173-303-640[4][c][i])
- Be placed on a foundation or base capable of:
  - Supporting the secondary containment system
  - Resisting the pressure gradients above and below the system
  - Preventing failure due to settlement, compression, or uplift (WAC 173-303-640[4][c][ii])
- Provide a leak detection system that will detect within 24 hours the failure of the primary tank system or the secondary containment system, the presence of any release of mixed or dangerous waste, or accumulated liquid in the secondary containment system (WAC 173-303-640[4][c][iii]). **Note:** Ecology has interpreted this requirement to mean the detection of 0.1 gallons per hour based on dangerous waste permit condition III.10.E.9.e.ii.
- Slope or be operated to drain and remove within 24 hours liquids resulting from leaks, spills, or precipitation (WAC 173-303-640[4][c][iv])
- Remove within 24 hours, or in as timely a manner as possible, spills, leaks, or accumulated liquid from the secondary containment system.
- Provide a means to inspect the visible portion of the secondary containment system on daily basis (WAC 173-303-640[6][b][iii])
- Additional secondary containment design requirements for ancillary equipment are found in the Lab FDD.

Basis Discussion: None

Verification: Verification is expected to be achieved through the following:

Verif. Method	Verif. By	Plan	Notes/Comments
I	IQRPE	An IQRPE shall review the design to verify all requirements for ancillary equipment secondary containment within the Lab have been met.	Document in IQRPE report prepared in accordance with WAC requirements

3.4.2.2.6 Tank Systems Inspection

Requirement: Tank systems must be inspected on a regular basis to identify leaks and faulty equipment. [Section 14.10, BOD, ID : DB-ENG-01-001 ID#12181] (D.1, D.2, D.3, D.4, D.5, D.6, E.2, E.3, E.4, G.1, G.2, G.3, G.4, G.5, G.6, H.2, H.3, H.4)

- Inspect aboveground portions of the tank systems for corrosion (WAC 173-303-640[6][b][i])
- Review data gathered from leak detection equipment (for example, leak detection, level detection, pressure or temperature gauges, monitoring wells) to ensure proper system operation (WAC 173-303-640[6][b][ii])
- Inspect the construction materials and the area immediately surrounding the externally-accessible portion of the tank system, including the secondary containment to detect erosion or signs of releases of waste (WAC 173-303-640[6][b][iii])
- Daily inspection of tank systems for areas without secondary containment (WAC 173-303-640[4][f])
- Inspect the cathodic protection system, if present, according to the following schedule (WAC 173-303-640[6][c])
- Within six months after initial installation and annually thereafter (WAC 173-303-640[6][c][i])
- Impressed current systems inspected and/or tested every other month (WAC 173-303-640[6][c][ii])
- Additional inspection requirements are found in the Lab FDD.

Basis Discussion: Tank systems are designed to be inspected on a regular basis to identify leaks and faulty equipment.

Verification: Verification is expected to be achieved through the following:

Verif. Method	Verif. By	Plan	Notes/Comments
I	ENG	Review design to verify a means for inspecting tank systems is provided in accordance to the requirement.	Ops and ESH to participate in the review.

3.4.2.2.7 Containment Slope and Drain

Requirement: Secondary containment shall be sloped and drained. Cell and pit liners and jacketed piping shall be sloped. [Sections 14.10.1.2, 14.10.1.3, BOD, [ID : DB-ENG-01-001 ID#12173], [ID : DB-ENG-01-001 ID#12175] [Section 20, ORD, [ID : RPT-OP-01-001 ID#1719], (D.1, D.2, D.3, D.4, D.5, D.6, E.3, E.4, G.1, G.2, G.3, G.4, G.5, G.6, H.3, H.4)

Basis Discussion: Secondary containment liners are sloped to route a spill to dedicated sumps and leak detection devices for detection, measurement, and removal. Secondary containment slope requirements are found in the Lab FDD. [ALARA]

Verification: Verification is expected to be achieved through the following:

Verif. Method	Verif. By	Plan	Notes/Comments
I	ENG	Review design to verify slopes are defined for cell and pit liners for drainage into sumps and for jacketed piping for drainage into leak detection boxes.	

3.4.2.2.8 Leakage Detection Systems

Requirement: Secondary containment shall be provided with a dedicated leak detection system that detects leakage within 24 hours of failure of the primary containment, the presence of any release of dangerous waste, or accumulated liquid in the secondary containment system. [Sections 11.3.5.2, 14.10.1.2, 14.10.1.3, BOD, [ID : DB-ENG-01-001 ID#12158], [ID : DB-ENG-01-001 ID#12175], [ID : DB-ENG-01-001 ID#11416]] [Section 10.4, ORD, [ID : RPT-OP-01-001 ID#1482]] (E.3, H.3, J.1)

Basis Discussion: The Lab Facility RLD system provides leak detection capability to detect the presence of any release of mixed or dangerous waste, or accumulated liquid in the secondary containment system, to indicate the need of transfer until collected material is removed. This requirement applies to the RLD leak detection boxes connected to the coaxial piping and the following sumps: RLD-SUMP-00041, 00042, 00043A, 00043B, 00044, and 00045.

The Department of Ecology has interpreted this requirement to mean the detection of 0.1 gal per hour detectable within 24 hours based on dangerous waste permit condition III.10.E.9.e.ii.

Verification: Verification is expected to be achieved through the following:

Verif. Method	Verif. By	Plan	Notes/Comments
I	ENG	Review design to verify provision of leak detection systems to detect leakage within 24 hours and incorporation of leak detection instruments that interface with the PCJ.	See: 24590-LAB-PER-M-04-0001 Lab Minimum Leak Rate Detection Capabilities for Leak Detection Boxes, Cell Sumps and Pit Sumps
A	ENG	Analyze leak detection capability for the sumps and verify detection within 24 hours.	See: 24590-LAB-PER-M-04-0001. Also refer to SDCN No. 24590-LAB-3YN-RLD-00009
A	ENG	Analyze leak detection capability for the leak detection boxes from C5 Cell jacketed piping and verify detection within 24 hours.	See: 24590-LAB-PER-M-04-0001

3.4.2.2.9 Spill and Leak Removal

Requirement: Spills and leaks detected by the leak detection system must be removed within 24 hours of detection or in as timely a manner as possible. [Sections 14.10.1.2, 14.10.1.3, BOD, [ID : DB-ENG-01-001 ID#12158], [ID : DB-ENG-01-001 ID#12175]] (E.3, H.3, J.1)

Basis Discussion: Note: Ecology must be notified if the releases or accumulated liquid cannot be accomplished within 24 hours. (WAC 173-303-640[4][c][iv])
Verification: Verification is expected to be achieved through the following:

Verif. Method	Verif. By	Plan	Notes/Comments
A	ENG	Perform an analysis of the leak detection systems to verify any detected/accumulated leakage can be removed in the required time frame.	See: 24590-LAB-PER-M-04-0002 Lab Waste Removal Capability for the Effluent Vessel Cells
I	SU/ COM	Verify pumps are sized to remove accumulated liquid within 24 hours.	See section 3.7.1.1 for verification of pump transfer rate.

3.4.2.2.10 Scope for Jacketed Pipe - the C5 Effluent Vessel Cell Confinement Boundary

Requirement: To ensure that the C5 effluent vessel cell maintains its confinement boundary and performs its credited safety functions, exterior jackets shall be provided and sealed on the following:

- The transfer line from the C3 cell to the C5 cell
- The transfer line to the PT Facility (within the C5 Cell boundary)
- The truck transfer line

- The drain lines from the hotcell gloveboxes (located outside the hotcells)
- C3 and C5 Rad Lab and hotcell drain piping buried in the slab

[Sections 4.4.2.2, 4.4.2.3, 4.4.2.4.5, 4.4.2.5, 4.4.3.1, 5.6.4, Appendix 3A, Table 3A-6, PDSA-Lab Facility, [ID : WTP-PSAR-ESH-01-002-06 ID#10749], [ID : WTP-PSAR-ESH-01-002-06 ID#10759], [ID : WTP-PSAR-ESH-01-002-06 ID#10763], [ID : WTP-PSAR-ESH-01-002-06 ID#10768], [ID : WTP-PSAR-ESH-01-002-06 ID#10751], [ID : WTP-PSAR-ESH-01-002-06 ID#10880], [ID : WTP-PSAR-ESH-01-002-06 ID#11407]] (D.6, G.6)

Basis Discussion The functional requirement for the jacketed piping is to contain liquid and particulates released in the C3 and C5 areas. For each piping section the outer jacket is sealed to the inner pipe just inside the C5 vessel cell. Additional requirements for jacketed pipe are found in the Lab FDD. [ALARA]

Verification: Verification is expected to be achieved through the following:

Verif. Method	Verif. By	Plan	Notes/Comments
I	ENG	Review IQRPE Report for Lab waste transfer lines to verify jacketed pipe requirements have been met.	Document in IQRPE report prepared in accordance with WAC requirements

3.4.2.3 Fire Protection

3.4.2.3.1 Automatic Fire Extinguishing System

Requirement: [HOLD] Automatic fire extinguishing systems shall be provided in the RLD vessel pit fire areas based on requirements of UBC, IBC, NFPA 101, NFPA 801, and DOE STD 1066 as appropriate for the building involved. [Section 13.5.1.3, BOD, [ID : DB-ENG-01-001 ID#11939]]

Basis Discussion: To meet this baseline requirement DOE has provided specific design criteria associated with the RLD system and associated areas in CCN 253398. This requirement is on HOLD pending acceptance of this criteria [24590-WTP-ATS-MGT-15-0456].

Verification: Verification is expected to be achieved through the following:

Verif. Method	Verif. By	Plan	Notes/Comments
I	ENG	Review design to verify requirements for automatic fire extinguishing systems in designated fire areas are met.	May be documented in an evaluation/assessment report. Pending resolution and/or adoption of criteria established by DOE in CCN 253398.

3.4.2.3.2 Fire Barriers

Requirement: The Lab RLD mechanical and electrical components that penetrate fire barriers shall be designed with materials listed in accordance with ASTM E814 or approved engineering evaluation that do not reduce the required fire-resistance rating of the barrier they penetrate. [Section 10.3.4.7, BOD, [ID : DB-ENG-01-001 ID#11347]

Basis Discussion: Required by IBC 2000 and DOE-STD-1066-97. Fire barrier drawings that include barriers related to Lab RLD are the following:

- 24590-LAB-UI-60-00004, Analytical Laboratory Fire Barrier Drawing Plan at EL (-)18 FT – 10 IN

- 24590-LAB-UI-60-00005, Analytical Laboratory Fire Barrier Drawing Plan at EL 0 FT – 0 IN
- 24590-LAB-UI-60-00006, Analytical Laboratory Fire Barrier Drawing Plan at EL 17 FT – 0 IN

Verification: Verification is expected to be achieved through the following:

Verif. Method	Verif. By	Plan	Notes/Comments
I	ENG	Verify all RLD mechanical or electrical components that penetrate a fire barrier are designed with materials that do not reduce the required fire-resistance rating of the barrier they penetrate.	May be documented in an evaluation/assessment report submitted to the building official for approval.

3.4.3 System Interface Requirements

3.4.3.1 Lab RLD Interfaces

Sectional requirements associated with specific system interfaces are discussed in this and subsequent requirement sections titled "System Interface Requirements." The Lab RLD system interfaces are listed in Table 3-4 below.

Table 3-4 Lab RLD System Interfaces

System Locator	System Name	Nature of Interface
C2V	C2 Ventilation	Provides negative pressure to vessels. Air inleakage into the vessel is also drawn from the C2V.
C3V	C3 Ventilation	Provides negative pressure to vessels. Air inleakage into the vessel is also drawn from the C3V.
C5V	C5 Ventilation	Provides negative pressure to vessels. Air inleakage into the vessel is also drawn from the C5V.
DIW	Demineralized Water	Water for flushing lines and for initial charging of the cooling water loops.
PSA	Instrument Service Air	Provides air required for instrument service and other high purity air needs. Provides air for valve actuators.
LVE	Low Voltage Electrical	Power source for pumps and actuators.
PCJ (Non-Safety)	Process Control System	Provides monitoring and automatic control functions for non-safety instruments and equipment.

3.4.3.2 Process Interfaces

3.4.3.2.1 Process and Utility Piping

Requirement: Lab RLD process and utility piping shall have a means to prevent or mitigate cross-contamination and prevent unplanned siphoning and backflow. [Section 5.1.2, BOD, [ID : DB-ENG-01-001 ID#10259], [Section 5.6.6, PDSA-Lab Facility, [ID : WTP-PSAR-ESH-01-002-06 ID#10884]] [Section 7.1, ORD, [ID : RPT-OP-01-001 ID#1101], [ID : RPT-OP-01-001 ID#1102], [ID : RPT-OP-01-001 ID#1100]]

Basis Discussion: Design solutions implemented: vessel inlet nozzles for process and utility inputs are located above liquid high level and pass the effluents through a visible air gap above the tank overflow outlet; utility connections to the process are via properly engineered connection or device, assuring prevention of siphoning and

backflow. Vessel wash rings located near the top of vessels, precludes the siphoning of contaminated water into the demineralized water system through the wash rings during backflow conditions. [ALARA]

Verification: Verification is expected to be achieved through the following:

Verif. Method	Verif. By	Plan	Notes/Comments
I	ENG	Verify that each process and utility connection to the Lab RLD System has a means to prevent or mitigate cross-contamination and prevent unplanned siphoning and backflow.	
I	ENG	Review design of Lab RLD transfer lines and verify that a means has been provided to break vacuum and permit gravity liquid draining.	

3.4.3.2.2 Low Voltage Electrical System Interface

Requirement: The Lab Facility RLD shall interface with the LVE system to receive electrical power. (K.1)

Basis Discussion: None.

Verification: Verification is expected to be achieved through the following:

Verif. Method	Verif. By	Plan	Notes/Comments
I	ENG	Review design to verify the interface between RLD and LVE systems.	

3.4.3.2.3 Ventilation Systems Interfaces

Requirement: The Lab Facility RLD vessels, cells and pits shall interface with the cascading C2V, C3V, and C5V ventilation systems. [Section 15.1, ORD, [ID : RPT-OP-01-001 ID#1584], (A.3, D.3, G.3)

Basis Discussion: Each RLD area is connected to a more negative air pressure system, promoting drain flow and maintaining proper separation among the classification areas. [ALARA]

Verification: Verification is expected to be achieved through the following:

Verif. Method	Verif. By	Plan	Notes/Comments
I	ENG	Review design to verify the interfaces with the C2V, C3V, and C5V ventilation systems.	

3.4.3.2.4 Interface with Demineralized Water System

Requirement: The Lab Facility RLD vessels shall interface with the DIW system for washing vessels and flushing piping. [Table 3A-4, PDSA-Lab Facility], [ID : WTP-PSAR-ESH-01-002-06 ID#11375]], [Sections 5.2, 20.0, ORD, [ID : RPT-OP-01-001 ID#1479], [ID : RPT-OP-01-001 ID#1730]] (C.1, C.2, F.1, F.2, I.1, I.2)

Basis Discussion: The Lab Facility RLD vessels are supplied with demineralized water for interior surface washdown for cleaning purpose, to decontaminate the vessel for maintenance purpose, or to dilute the liquid inside the vessel. [ALARA]

Verification: Verification is expected to be achieved through the following:

Verif. Method	Verif. By	Plan	Notes/Comments
I	ENG	Review design to verify an interface between the DIW system and the Lab Facility RLD vessels and piping.	

3.4.4 Other Technical, Specialty, Operations, and Maintenance Requirements

3.4.4.1 Startup & Testing Support

3.4.4.1.1 Inspection, Calibration, and Testing Support during Startup, Commissioning, and Normal Operations

Requirement: The Lab Facility RLD system design shall provide the capability to access and perform remote or direct calibration, periodic functional testing, and inspections of equipment and components during normal operation in areas that are ALARA. Isolation and test points with drain and bleed valves shall be included in the Lab Facility RLD system design to allow for removal, replacement, and testing of plant items required during normal operations. [Sections 6.7, 8.1.2, 9.12, 11.4.7, 11.5.1, 12.6.3, BOD, [ID : DB-ENG-01-001 ID#11459], [ID : DB-ENG-01-001 ID#10415], [ID : DB-ENG-01-001 ID#10698], [ID : DB-ENG-01-001 ID#11150], [ID : DB-ENG-01-001 ID#11736], [ID : DB-ENG-01-001 ID#11448]] [Section 9.1, ORD, [ID : RPT-OP-01-001 ID#1185], [ID : RPT-OP-01-001 ID#1186], [ID : RPT-OP-01-001 ID#1173] [ID : RPT-OP-01-001 ID#1185]

Basis Discussion: Additional nozzles, branch lines, removable spools, or other provisions that may be needed to support identified testing, are to be accommodated in the design as jointly determined by the Design Agency and Startup and Commissioning during the design development and review process, with consideration given to the tests and demonstration activities required for requirement verification specified in Appendix A. This may include, but is not limited to, provisions to support the introduction or removal of fluids, gases, reagents, or simulants; or the availability of special test ports, sampling ports, or temporary instruments or instrument lines.

Verification: Verification is expected to be achieved through the following:

Verif. Method	Verif. By	Plan	Notes/Comments
I	ENG	Review design for configurations that will facilitate remote or direct calibration, periodic functional testing, and inspections of equipment in areas that are ALARA.	May be documented in an evaluation/assessment report. Plant engineering to participate and/or review evaluation/assessment.
I	ENG/ COM/ SU	Review the design to verify isolation and test points are provided with drain and bleed valves to allow for removal, replacement, and testing of plant items required during normal operations.	Operation to participate in assessment/evaluation led by design agency.

3.4.4.2 Operation & Maintenance

3.4.4.2.1 Instrumentation for the C5 Process Areas

Requirement: In general, instrumentation shall be located outside of R5/C5 areas. Instrumentation that is located within C5 process areas shall be remotely maintainable. [Sections 11.16, 5.2, ORD: [ID : WTP-RPT-OP-01-001 ID#1373], [ID : RPT-OP-01-001 ID#1047]]

Basis Discussion: None.

Verification: Verification is expected to be achieved through the following:

Verif. Method	Verif. By	Plan	Notes/Comments
I	ENG	Review design to verify that instrumentation is located outside of R5/C5 areas or is remotely maintainable.	

3.4.4.2.2 Instrumentation for C3 Process Areas

Requirement: Whenever possible, instruments and detectors for the C3 process areas that require maintenance shall be located outside the C3 contaminated areas. However, transducer panels housing liquid level systems and associated input/output, and pressure transducers, shall be located in the C3 classified area as a precaution against back-contamination. [Sections 9.1, 11.16, ORD, [ID : RPT-OP-01-001 ID#1373], [ID : RPT-OP-01-001 ID#1186]]

Basis Discussion: Locating instruments in areas that are not likely to be contaminated reduces the need for personal protective equipment when working on the instruments. Locating them in low dose areas reduces radiation exposure. If a transmitter is required to operate in a radiation environment, a radiation tolerant transmitter or remote sensing electronic type is used. [ALARA]

Verification: Verification is expected to be achieved through the following:

Verif. Method	Verif. By	Plan	Notes/Comments
I	ENG	Review design to verify that instruments and detectors are located outside the C3 classified areas wherever possible.	
I	ENG	Review design to verify that transducer panels and associated input/output, and pressure transducers are located in the C3 classified areas.	

3.4.4.2.3 Instrumentation and Power Plug Connections

Requirement: The RLD equipment and components that are remotely removable and replaceable shall use plugs that can be engaged/disengaged with remote handling equipment, for power and instrumentation instead of hard wiring. [Sections 9.1, 14.8, ORD, [ID : RPT-OP-01-001 ID#1189], [ID : RPT-OP-01-001 ID#1525]

Basis Discussion: Plugs are used for power and instrumentation, instead of hardwiring, where practical to minimize maintenance labor time, number, and type of crafts required to perform work. This applies to equipment or components that are remotely removable and replaceable, and includes tools that may need power or instrumentation connections, such as the in-cave portable vacuum or impact wrench. The plugs are also able to be remotely manipulated. [ALARA]

Verification: Verification is expected to be achieved through the following:

Verif. Method	Verif. By	Plan	Notes/Comments
I	ENG	Review design to verify that plugs have been used for power and instrumentation instead of hard wiring where practical.	

3.4.4.2.4 Equipment Accessibility – Support of Maintenance and Operations

Requirement: Equipment or components requiring maintenance or replacement during normal operation shall be accessible and located where personnel exposures are ALARA. Equipment, instrumentation, and electrical components located more than 5 feet from ground level shall have adequate space to allow for access with a ladder, portable manlift, or scaffolding for operation and maintenance. Equipment, instrumentation, and electrical components that are 6 feet and over from floor level shall be provided with permanent work platform with fixed ladder/stair access to perform operation and maintenance. [Sections 8.1.2, 11.3.1, BOD, [ID : DB-ENG-01-001 ID#10698], [ID : DB-ENG-01-001 ID#11386]] [Sections 9.1, 11.16, 14.1, ORD, [ID : RPT-OP-01-001 ID#1185, ID : RPT-OP-01-001 ID#1373, ID : RPT-OP-01-001 ID#1463], [ID : RPT-OP-01-001 ID#1186], [ID : RPT-OP-01-001 ID#1190], [ID : RPT-OP-01-001 ID#1174], [ID : RPT-OP-01-001 ID#1178], [ID : RPT-OP-01-001 ID#1179, ID : RPT-OP-01-001 ID#1180], [ID : RPT-OP-01-001 ID#1184]]

Basis Discussion: Accessibility applies to both above and below grade (or floor) level. If not accessible, engineered aids such as valve chain wheels or reach rods for operability should be provided. Note that the Lab Facility Design Description (24590-LAB-3ZD-60-00001) provides: verification of adequate space for access to equipment, instrumentation, and electrical components above 5' from ground level; and provides verification of permanent work platforms for equipment, instrumentation, and electrical components that are located 6 feet and over from floor level.

Verification: Verification is expected to be achieved through the following:

Verif. Method	Verif. By	Plan	Notes/Comments
I	ENG	Review the equipment, instrumentation, and electrical components that are 6 feet and over from floor level to verify they are provided with permanent work platform with fixed ladder/stair access to perform operation and maintenance.	
I	ENG	Review all equipment, instruments, and electrical components located more than 5 ft. from the ground and verify adequate space for operation and maintenance access.	

3.4.4.3 Remote Operation in C3 and C5 Cell Areas

3.4.4.3.1 Remote Operation of In-Cell Equipment

Requirement: **[HOLD]** Lab RLD equipment in the C3 and C5 Cell areas, including associated valve and pump pit areas shall be designed to be operated and maintained remotely. [Section 11.4.1, BOD, [ID : DB-ENG-01-001 ID#11420]] [Sections 5.2, 14.8, ORD, [ID : RPT-OP-01-001 ID#1485], [ID : RPT-OP-01-001 ID#1047]]

Basis Discussion: The C5 Pump and Valve Pits in the Lab RLD System are remote locations. Remote operation features ensure WTP Facility design provides the ability to operate routinely operated valves without undue difficulty to the operators. This requirement is on hold due to a lack of clarity in the source requirements; see Condition Report 24590-WTP-GCA-MGT-15-01600. This issue is being tracked to completion via 24590-WTP-ATS-MGT-15-0481. Equipment associated with this requirement is already received and installed, and the intent of the hold is to prevent further verification of the equipment. [ALARA]

Verification: Verification is expected to be achieved through the following:

Verif. Method	Verif. By	Plan	Notes/Comments
I	ENG	Review C3 and C5 in-cell operations, including the valve and pump pits, and verify design features for remote operation.	

3.4.4.3.2 Remote Maintenance and Replacement

Requirement: **[HOLD]** Maintainable or replaceable equipment and components located in the Lab RLD C3 and C5 Cell areas, including associated valve and pump pit areas, shall be engineered with remote handling features that enable safe remote removal and reinstallation (including the ability to disconnect and reconnect support utilities, as applicable), and allow transportation between their installed location and their designated maintenance, storage, or disposal location. [Section 11.4.1, BOD, [ID : DB-ENG-01-001 ID#11424]] [Sections 5.2, 6.2, 8.1.3, 9.1, 9.2, 14.1, 14.8, 14.16, 20, ORD, [ID : RPT-OP-01-001 ID#1147], [ID : RPT-OP-01-001 ID#1170], [ID : RPT-OP-01-001 ID#1517], [ID : RPT-OP-01-001 ID#1511, ID : RPT-OP-01-001 ID#1512], [ID : RPT-OP-01-001 ID#1190], [ID : RPT-OP-01-001 ID#1198]]

Basis Discussion: In general, process systems and equipment within cells that could fail during operations are designed for safe recovery, replacement, or redundancy. Remote handling features help to facilitate interfacing with equipment or components when using remote handling equipment. This requirement is on hold due to a lack of clarity in the source requirements; see Condition Report 24590-WTP-GCA-MGT-15-01600. This issue is being tracked to completion via 24590-WTP-ATS-MGT-15-0481. Equipment associated with this requirement is already received and installed, and the intent of the hold is to prevent further verification of the equipment. [ALARA]

Table 3-5 Remotely Replaceable/Maintainable Equipment/Components

Equipment/Component Description	Remote Removal and Replacement
Pumps	Yes
Pump motors	Yes
Valve Trim	Yes
Instrumentation	Yes
Weirs	Yes
Removable pipe spools (Jumpers)	Yes

Verification: Verification is expected to be achieved through the following:

Verif. Method	Verif. By	Plan	Notes/Comments
I	ENG	Review design to verify that the listed replaceable components, located in the Lab RLD C3 and C5 Cell areas, are remotable.	May be documented in an evaluation/assessment. May be verified using a software program such as "IGrip" (or similar).
D	SU/ COM	Demonstrate remotability in accordance with 24590-WTP-PL-RACT-RT-0001, WTP Remotability Verification Plan.	Physical demonstration

3.4.4.3.3 Remote Removal & Replacement Tools

Requirement: **[HOLD]** Tools shall be provided for removal and replacement of valves, pumps, and instrumentation from C3 and C5 cells and pits. Hoists shall be provided to lift equipment in and out of the cells and pits. [Section 10.4, ORD, [ID : RPT-OP-01-001 ID#1237], [ID : RPT-OP-01-001 ID#1240]]

Basis Discussion: This requirement is on hold due to a lack of clarity in the source requirements; see Condition Report 24590-WTP-GCA-MGT-15-01600. This issue is being tracked to completion via 24590-WTP-ATS-MGT-15-0481. Equipment associated with this requirement is already received and installed, and the intent of the hold is to prevent further verification of the equipment. [ALARA]

Verification: Verification is expected to be achieved through the following:

Verif. Method	Verif. By	Plan	Notes/Comments
I	ENG	Review the removal and replacement requirements for the consumable components and mechanical equipment of the C3 and C5 Cells, and associated valve and pump pits, and verify that the tools needed to remotely remove, recover, and replace the equipment, are provided and that hoists are provided to lift the equipment in and out of the cells and pits.	

3.4.4.3.4 Remote Operated Valve Indicators

Requirement: Remote operated valves shall be equipped with a highly reliable position indicators. Remotely operated valves normally repositioned to support processing (this includes support systems) shall have position indication from directly coupled positioning mechanisms. The indication signal can be visual, mechanical, electric, or electronic based on the valve location and type of valve. [Section 14.4, ORD, [ID : RPT-OP-01-001 ID#1486]]

Basis Discussion: None [ALARA].

Verification: Verification is expected to be achieved through the following:

Verif. Method	Verif. By	Plan	Notes/Comments
I	ENG	Verify that remotely operated valves are equipped with a highly reliable position indicator	

3.4.4.3.5 Valve Reach Rods

Requirement: Valve reach rods, if necessary, shall be designed to be removed easily. [Section 14.4, ORD, [ID : RPT-OP-01-001 ID#1487]]

Basis Discussion: None

Verification: Verification is expected to be achieved through the following:

Verif. Method	Verif. By	Plan	Notes/Comments
I	ENG	Review design of remotely operated valves with reach rods and verify unencumbered disconnection and removal.	

3.4.4.4 Decontamination

3.4.4.4.1 Equipment Durability for Decontamination

Requirement: RLD equipment located in the C3 & C5 cells and pits shall be designed to withstand decontamination without any reduction of functionality through degradation of the electrical, mechanical, or any other components involved. [Sections 5.2, 9.1, ORD, [ID : RPT-OP-01-001 ID#1047], [ID : RPT-OP-01-001 ID#1557], [ID : RPT-OP-01-001 ID#1171]

Basis Discussion: Components located in the C3 and C5 area are decontaminated before transport to the C3 maintenance shop to allow for hands-on maintenance. The equipment specifications define the design that accounts for these processes. [ALARA]

Verification: Verification is expected to be achieved through the following:

Verif. Method	Verif. By	Plan	Notes/Comments
I	ENG	Review the Lab facility RLD system design to verify equipment/components can withstand decontamination without degradation or reduction in equipment functionality	May be documented in an evaluation/assessment. Operations and Radiological Engineering will participate in or review evaluation/assessment.

3.4.4.4.2 Enclosure Contamination Reduction

Requirement: Equipment requiring maintenance (for example, process isolation, valves, pumps, and instruments) that come into contact with the active process fluids shall be housed in enclosures that resist the gradual buildup of contamination and are easily decontaminated. The enclosures shall have installed flushing capability and drains. [Section 14.1, ORD, [ID : RPT-OP-01-001 ID#1466]]

Basis Discussion: [ALARA]

Verification: Verification is expected to be achieved through the following:

Verif. Method	Verif. By	Plan	Notes/Comments
I	ENG	Review design of equipment and instruments in contact with the process fluids and verify adequate enclosures have been provided that resist the gradual buildup of contamination and have installed flushing capabilities and drains.	

3.4.4.4.3 Chemical Cleaning of Vessels

Requirement: Piping and valving systems in the Lab facility RLD design shall be furnished with the capability to add decontamination chemicals to the process vessels. [Sections 14.1, 20.0, ORD, [ID : RPT-OP-01-001 ID#1467], [ID : RPT-OP-01-001 ID#1717, ID : RPT-OP-01-001 ID#1719, ID : RPT-OP-01-001 ID#1720, ID : RPT-OP-01-001 ID#1721]]

Basis Discussion: Chemical cleaning supports deactivation, closure, and decommissioning processes. [ALARA]

Verification: Verification is expected to be achieved through the following:

Verif. Method	Verif. By	Plan	Notes/Comments
I	ENG	Review design to verify piping and valving systems have the capability to add decontamination chemicals to process vessels.	

3.4.4.4.4 Vessel Washing

Requirement: The Lab facility RLD vessels (RLD-VSL-00163/RLD-VSL-00164/RLD-VSL-00165) shall be equipped with interior perimeter spray rings, or equivalent, and shall have the capability to wash the vessel walls and internals for decontamination or flushing. [Sections 5.2, 14.1, 14.2, 20.0, ORD, [ID : RPT-OP-01-001 ID#1047], [ID : RPT-OP-01-001 ID#1467], [ID : RPT-OP-01-001 ID#1475], [ID : RPT-OP-01-001 ID#1720, [ID : RPT-OP-01-001 ID#1730]] (C.1, F.1, I.1)

Basis Discussion: The internal spray mechanism/flushing capability in the vessels facilitates the removal of contamination, prevents the buildup of solids on the vessel walls, and facilitates diluting the vessel contents. Connections, such as nozzles, are provided for adding demineralized water and chemicals, such as sodium hydroxide, into the vessels to neutralize effluent. The vessels are cleaned prior to removal for decontamination and decommissioning or maintenance/replacement activities. [ALARA]

Verification: Verification is expected to be achieved through the following:

Verif. Method	Verif. By	Plan	Notes/Comments
I	ENG	Review design to verify that vessels are equipped with interior perimeter spray rings, or equivalent, that have the capability to wash both the vessel walls and the internals.	

3.4.4.4.5 Provisions for Drainage, Flushing, and Slope

Requirement: The Lab facility RLD design shall ensure that pipelines that could contain liquids are sloped and free drainable to the maximum extent practicable. The design shall include physical provision for the flushing, cleaning and draining (to minimum heel volume) of hardware, vessels, and associated piping with demineralized water. Process piping shall have no traps or pockets that can accumulate liquids or solids that are not drained. Level piping for a short distance through wall penetrations, at connections to equipment, and at jumpers is acceptable. Floor drains are not considered process piping and may contain plumbing traps. Instrument air lines are not considered process piping and are not required to be sloped. [Sections 6.2.1, 11.3.1, BOD, [ID : DB-ENG-01-001 ID#10322], [ID : DB-ENG-01-001 ID#11386],] [Sections 7.1, 14.3, 20.0, ORD, [ID : RPT-OP-01-001 ID#1103], [ID : RPT-OP-01-001 ID#1477], [ID : RPT-OP-01-001 ID#1478], [ID : RPT-OP-01-001 ID#1479], [ID : RPT-OP-01-001 ID#1725], [ID : RPT-OP-01-001 ID#1730]] (A.2, A.7, C.1, D.2, D.6, F.1, G.2, G.6, I.1)

Basis Discussion: Flushing capability is provided for piping systems to limit accumulation of solids in process piping, and to facilitate decontamination. [ALARA]

The piping provisions for draining fluid minimizes contamination levels during equipment maintenance and (or) replacement, in support of ALARA design objectives. The piping is sloped for drainage to minimize waste accumulation.

For additional details on pipe sloping, refer to 24590-WTP-GPG-M-027, *Recommended Slopes for Piping System*, and slope requirements on 24590-WTP-M6-50-00008, *P&ID Symbols and Legend Sheet 8 of 8*.

The following Lab facility RLD system piping is to be flushable:

- Transfer lines from pumps RLD-PMP-00190A/B, 00182A/B, and 00183A/B to all points of distribution in the Lab RLD system.
- Recirc lines from pumps RLD-PMP-00190A/B, 00182A/B, and 00183A/B to vessels.
- Suction lines from vessels and sumps to pumps RLD-PMP-00190A/B, 00182A/B, and 00183A/B.
- Spray nozzles and overflow lines for RLD vessels RLD-VSL-00163, 00164, and 00165.

Verification: Verification is expected to be achieved through the following:

Verif. Method	Verif. By	Plan	Notes/Comments
I	ENG	Review design and verify all RLD process piping that could contain liquids is sloped and free drainable to the extent practicable.	
D	SU/ COM	Demonstrate the capability to flush, clean, and drain the LAB Facility RLD system hardware, vessels, and piping with demineralized water.	

3.5 Vessel Requirements

3.5.1 Mission and Functional/Performance Requirements (Including States/Modes)

3.5.1.1 Vessel Design

3.5.1.1.1 Vessel Design Standards

Requirement: The Lab Facility RLD vessels that are safety significant shall be designed to the American Society of Mechanical Engineers (ASME) Boiler and Pressure Vessel Code, Section VIII, Division 1. [Section 11.7.1, 14.10, BOD, [ID : DB-ENG-01-001 ID#11510]]. (A.4, D.4, G.4)

Basis Discussion: None.

Verification: Verification is expected to be achieved through the following:

Verif. Method	Verif. By	Plan	Notes/Comments
A	ENG	Perform an analysis of the Lab Facility RLD vessel RLD-VSL-00165 in accordance with ASME Section VIII, Div. 1.	
I	ENG	Review vendor documentation to verify conformance of design with the analysis.	May be documented in an assessment/evaluation.

3.5.1.1.2 Volume of Collected C2 Subsystem Effluents, Normal Operating Conditions

Requirement: The Lab RLD vessel RLD-VSL-00163 shall be designed and sized to receive the volumes of effluents and out of-specification process streams generated in the C2 Process areas of the Lab facility. (A.1, A.3, B.2, B.3, C.1, C.2).

Basis Discussion: The C2 Floor Drain Collection Vessel (RLD-VSL-00163) receives the routine and non-routine non-radioactive effluents generated during the operation of the Analytical Laboratory. These include effluents from the Lab area corridor floor drains, drains from C2 classified areas and rooms, HVAC condensate from the C2V, C3V and C5V systems, sump contents from RLD-SUMP-00040, fire water, in case of fire, and periodic plant and vessel washes within the C2 vessel vault. The RLD vessel stores the effluents and transfers the effluents in batches for subsequent treatment or disposal. [ALARA]

Verification: Verification is expected to be achieved through the following:

Verif. Method	Verif. By	Plan	Notes/Comments
I	ENG	Review design to verify that the Lab RLD C2 vessel (RLD-VSL-00163) receives the non-radioactive C2 area effluents generated in the Lab Facility.	
A	ENG	Perform an analysis to determine sizing required to accommodate reception of maximum volume of the non-radioactive effluents.	
I	ENG	Review analysis calculations to verify that the RLD vessel has been adequately sized to accept the maximum volume of effluents listed above.	May be documented in an assessment/evaluation.

3.5.1.1.3 Volume of Collected C3 Subsystem Effluents, Normal Operating Conditions

Requirement: The Lab RLD vessel RLD-VSL-00164 shall be designed and sized to receive the volumes of effluents and out of-specification process streams generated in the low radiation C3 Process areas of the Lab facility. (D.1, D.3, E.2, E.3, F.1, F.2)

Basis Discussion: The C3 Sink Drain Collection Vessel (RLD-VSL-00164) receives routine and non-routine low radiation effluents generated during the operation of the Analytical Laboratory. These include effluents from the Lab area sink drains, drains from C3 classified areas and rooms, sump contents from RLD-SUMP-00041, fire water generated in the C3 areas, in case of fire, and periodic plant and vessel washes within the C3 vessel cell. The RLD vessel stores the effluents and transfers the effluents in batches for subsequent treatment or disposal. [ALARA]

Verification: Verification is expected to be achieved through the following:

Verif. Method	Verif. By	Plan	Notes/Comments
I	ENG	Review design to verify that the Lab RLD C3 vessel (RLD-VSL-00164) receives the low radiation C3 area effluents generated in the Lab Facility.	
A	ENG	Perform an analysis to determine sizing required to accommodate reception of maximum volume of the low radiation effluents.	

Verif. Method	Verif. By	Plan	Notes/Comments
I	ENG	Review analysis calculations to verify that the RLD vessel has been adequately sized to accept the maximum volume of effluents listed above.	May be documented in an assessment/evaluation.

3.5.1.1.4 Volume of Collected C5 Subsystem Effluents, Normal Operating Conditions

Requirement: The Lab RLD vessel RLD-VSL-00165 shall be designed and sized to receive the volumes of effluents and out of-specification process streams generated in the high radiation C5 Process areas of the Lab facility. (G.1, G.3, H.2, H.3, I.1, I.2)

Basis Discussion: The C5 Hotcell Drain Collection Vessel (RLD-VSL-00165) receives routine and non-routine high radiation effluents generated during the operation of the Analytical Laboratory. These include effluents from the hotcell and glovebox drains, drains from C5 classified areas and rooms, sump contents from RLD-SUMP-00042, fire water generated in the C5 areas, in case of fire, and periodic plant and vessel washes within the C5 vessel cell. The RLD vessel stores the effluents and transfers the effluents in batches for subsequent treatment or disposal. [ALARA]

Verification: Verification is expected to be achieved through the following:

Verif. Method	Verif. By	Plan	Notes/Comments
I	ENG	Review design to verify that the Lab RLD C5 vessel (RLD-VSL-00165) receives the high radiation C5 area effluents generated in the Lab Facility.	
A	ENG	Perform an analysis to determine sizing required to accommodate reception of maximum volume of the high radiation effluents.	
I	ENG	Review analysis calculations to verify that the RLD vessel has been adequately sized to accept the maximum volume of effluents listed above.	May be documented in an assessment/evaluation.

3.5.2 Nuclear Safety, ALARA, Environmental and Other Regulatory Requirements

3.5.2.1 C5 Vessel Cell Confinement.

Requirement: The C5 effluent vessel cell and the hotcell drain collection tank pump and valve pits shall provide confinement for spilled material. [Section 4.4.2.3, PDSA-Lab Facility, [ID : WTP-PSAR-ESH-01-002-06 ID#10751]]

Basis Discussion: None

Verification: Verification is expected to be achieved through the following:

Verif. Method	Verif. By	Plan	Notes/Comments
I	ENG	Review design to verify C5 effluent vessel cell and hotcell drain collection tank pump and valve pits have been designed to provide confinement for spilled material.	

3.5.3 System Interface Requirements

3.5.3.1 Truck Transfers during Cold Commissioning

Requirement: Prior to the start of radioactive waste processing at the WTP, the Lab RLD system shall have the capability to transfer the liquid waste as required from each of the Lab RLD vessels (RLD-VSL-00163, 00164, and 00165) by tanker truck to the disposal facility. [Sections 1.3, 1.6, ICD-06, [ID : WTP-ICD-MG-01-006 ID#10194], [ID : WTP-ICD-MG-01-006 ID#10224], [ID : WTP-ICD-MG-01-006 ID#10226]] (A.6, D.6, G.6)

Basis Discussion: The WTP Laboratory is expected to begin operation prior to the start of radioactive waste processing by the WTP. Liquid wastes may be generated from Laboratory operations that require treatment and disposal. The WTP Laboratory wastes generated during this timeframe are proposed to be transported by tanker truck to an offsite facility that will accept the waste. The LERF/ETF is proposed as one such facility. Acceptability of the Laboratory wastes at the LERF/ETF and other potential facilities need to be evaluated and details of the waste transfers need to be further defined.

Verification: Verification is expected to be achieved through the following:

Verif. Method	Verif. By	Plan	Notes/Comments
I	ENG	Review the design to verify that the Lab RLD system has the capability to transfer the liquid waste from each vessel (Lab-RLD-VSL-00163, 00164, & 00165) via truck during cold commissioning operations to an offsite disposal facility.	

3.5.3.2 Interface of C2 Subsystem with BOF-NLD System

Requirement: The Lab Facility RLD system shall be capable of transferring non-radioactive effluents to the BOF collection tank (NLD-TK-00001). (A.7)

Basis Discussion: The contents of the RLD-VSL-00163 in the Lab Facility must be classified acceptable to the NLD prior to transfer to the BOF Nonradioactive Liquid Disposal System for processing. Alternately, if the BOF Facility cannot accept the effluents, the effluents may be transferred to the Laboratory area sink drain collection vessel (RLD-VSL-00164). When the C5 Subsystem is on line, the effluents may also be transferred to hotcell drain collection vessel (RLD-VSL-00165). [ALARA]

Verification: Verification is expected to be achieved through the following:

Verif. Method	Verif. By	Plan	Notes/Comments
I	ENG	Review design to verify the inclusion of a transfer line between RLD vessel RLD-VSL-00163 and BOF vessel NLD-TK-00001.	

3.5.3.3 Interface with Pretreatment Plant Wash and Disposal System

Requirement: The Lab Facility RLD system shall be capable of transferring radioactively contaminated collected effluents to the PT Facility plant wash vessel (PWD-VSL-00044). (G.6)

Basis Discussion: The contents of the RLD-VSL-00165 in the Lab Facility are transferred to the PT Facility for processing. [ALARA]

Verification: Verification is expected to be achieved through the following:

Verif. Method	Verif. By	Plan	Notes/Comments
I	ENG	Review design to verify the inclusion of a transfer line between vessel RLD-VSL-00165 and vessel PWD-VSL-00044.	

3.5.4 Other Technical, Specialty, Operations, and Maintenance Requirements

3.5.4.1 Vessel Overflow

3.5.4.1.1 Vessel Overflow Feature Design Consideration

Requirement: The Lab Facility RLD vessels shall have overflow feature(s) designed to provide an unobstructed escape flow path for liquids or gases during abnormal operating conditions (e.g., loss of negative pressure or vessel contents in excess of operational level limits) to prevent liquid flow through the vessel vent system. Overflowed process stream shall be returned to the waste treatment process. In addition, the compatibility of the overflowing liquid with the recipient vessel shall be confirmed. [Section 6.7.5, BOD, [ID : DB-ENG-01-001 ID#10430]] (B.2, E.2, H.2)

Basis Discussion: The overflow features provide a flow pathway to avoid overfilling the vessel to the point where backflow could occur. The overflowed process effluents should be recycled and retuned to waste treatment process. The recycle should be compatible with the return point liquid chemical and physical properties. In this case, consideration needs to be given to avoiding adverse chemical reactions, precipitation, or heat generation.

Vessel RLD-VSL-00163 overflows into RLD-SUMP-00040, vessel RLD-VSL-00164 overflows into RLD-SUMP-00041, and vessel RLD-VSL-00165 overflows into RLD-SUMP-00042.

Verification: Verification is expected to be achieved through the following:

Verif. Method	Verif. By	Plan	Notes/Comments
I	ENG	Review design to verify overflow features of each vessel are in conformance with the requirement.	

3.5.4.1.2 Vessel Overflow Line Sizing/Routing

Requirement: Vessel overflow lines shall be sized to handle the maximum inflow to the vessel without the liquid level in the overflowing vessel reaching an unacceptably high level. The overflow lines shall be routed in a way such that overflow directed to the cell floor shall only be considered as the last overflow in a cascade system. No valves or other restrictions shall be permitted in a vessel overflow line (WAC-173-303-(5)(b)(ii)). [Section 6.7.5, BOD, [ID : DB-ENG-01-001 ID#10430]] (B.2, E.2, H.2)

Basis Discussion: The overflow lines need to be designed to handle the maximum inflow and to prevent the buildup of material that could cause blockages in the lines. The overflow systems need to meet the requirements of WAC-173-303, Dangerous Waste Regulations. Where an overflow is from a vessel to the cell, the overflow system maintains segregation of the cell and vessel ventilation systems.

Refer to Calculations 24590-LAB-M6C-RLD-00001, *Overflow Sizing for LAB RLD Vessels*, and Design Guide 24590-WTP-GPG-M-032, *Vessel Overflow and Gravity Line Sizing*.

Verification: Verification is expected to be achieved through the following:

Verif. Method	Verif. By	Plan	Notes/Comments
A	ENG	Perform an analysis documenting vessel overflow lines are sized to meet the maximum in-flow rate.	
I	ENG	Review design to verify conformance with the analysis.	
I	ENG	Review design to verify that overflow lines are routed in conformance with the requirement.	

3.5.4.1.3 Mitigation of Hydrogen Accumulation

Requirement: The Lab Facility RLD vessels/ancillary equipment shall be designed to prevent the accumulation of hydrogen gas levels higher than the lower explosive limit. Vessel headspace and mixing shall be provided to maintain the volume of hydrogen below the lower flammable level. [Hanford Facility Dangerous Waste Portion of RCRA Permit, Rev. 8c, Part III, Operating Group 10, Permit No. WA7890008967, WAC 173-303-340] [Safety Criteria Appendix C, Section 36.0, SRD, [ID : SRD-ESH-01-001-02 ID#822]] (A.4, A.5, B.1, D.4, D.5, E.1, G.4, G.5, H.1)

Basis Discussion: Accumulation of flammable gases such as hydrogen in the vessels/piping system can occur as a result of thermolysis. The system should be designed to mitigate hydrogen accumulation in the vessels/piping system. Sufficient mixing/air purge needs to be provided to prevent hydrogen accumulation/storage in the waste.

Verification: Verification is expected to be achieved through the following:

Verif. Method	Verif. By	Plan	Notes/Comments
A	ENG	Perform an analysis to determine the required amount of air purge and mixing to mitigate hydrogen generation.	See 24590-WTP-PER-PR-03-001
I	ENG	Review design to verify appropriate design features (e.g. air purging, mixing capabilities) have been included for RLD vessel/ancillary equipment to prevent hydrogen accumulation greater than the lower explosive limit.	

3.6 Piping Requirements

3.6.1 Mission and Functional/Performance Requirements (Including States/Modes)

3.6.1.1 Codes and Standards

Requirement: The Lab Facility RLD piping design, fabrication, inspection, and testing of the piping shall be in accordance with *Process Piping,* 1996 edition, as tailored in Appendix C, Section C.26, of the Safety Requirements Document. [Appendix C 26.0, SRD, [ID : SRD-ESH-01-001-02 ID#666]] [Sections 11.1.2, 11.7.1, 11.7.6, BOD, [ID : DB-ENG-01-001 ID#11373], [ID : DB-ENG-01-001 ID#11516], [ID : DB-ENG-01-001 ID#13128, ID : DB-ENG-01-001 ID#13129, ID : DB-ENG-01-001 ID#13130]]

Basis Discussion: Although the Lab Facility RLD system has non-safety portions of piping, ASME B31.3, Process Piping, 1996 edition, as tailored in Appendix C, Section C.26, of the Safety Requirements Document is used in all Lab RLD pipe for design consistency.

The pipe, flanges, and valves are in accordance with the long stock code descriptions listed in applicable pipe class specifications used for the Lab Facility RLD system. Each pipe class sheet lists the design code used for the specific pipe class specification. The pipe, fittings, flanges, and valves used are in accordance with the design code listed on the specific pipe class specification. There are specific numbered in-line components provided by other engineering disciplines that are in accordance with the design code requirements listed in the applicable engineering specification for the specific component.

Verification: Verification is expected to be achieved through the following:

Verif. Method	Verif. By	Plan	Notes/Comments
A	ENG	Perform an analysis of the piping design in accordance with ASME B31.3, 1996 edition, as tailored in Appendix C, Section C.26, of the SRD.	
I	ENG	Review design to verify conformance with the analysis results.	Document in an evaluation/assessment that may be performed using a sampling basis or documented in design verification report or requirements verification matrix.

3.6.1.2 Breaking Vacuum for Gravity Liquid Draining

Requirement: Piping design shall include the capability to break a vacuum in a transfer line as required to allow gravity liquid draining. [Section 7.1, ORD, [ID : RPT-OP-01-001 ID#1105]]. (A.7, D.6, G.6)

Basis Discussion: The addition of a vacuum breaker to a transfer line ensures that when negative pressure occurs in the pipe during operation, air is admitted and swept in the pipe thereby restoring normal flow. [ALARA]

Verification: Verification is expected to be achieved through the following:

Verif. Method	Verif. By	Plan	Notes/Comments
A	ENG	Perform an analysis to determine required vacuum breakers in transfer piping.	
I	ENG	Review design to verify that a means of breaking vacuum is provided.	

3.6.1.3 High Point Vent and Low Point Drain

Requirement: The Lab Facility RLD process piping shall have high point vents and low point drains and shall be sloped to drains/vessels. [Section 14.3, ORD, [ID : RPT-OP-01-001 ID#1477]]. (A.2, A.7, D.2, D.6, G.2, G.6)

Basis Discussion: This is an ALARA feature because it ensures there is no accumulated gases/liquids in the lines prior to opening them for maintenance, reducing the risk of spreading contamination. [ALARA]

Verification: Verification is expected to be achieved through the following:

Verif. Method	Verif. By	Plan	Notes/Comments
I	ENG	Review design to verify that piping systems include high point vents and low point drains, which are sloped to vessels/drains.	

3.6.2 Nuclear Safety, ALARA, Environmental and Other Regulatory Requirements

3.6.2.1 Coaxial Piping

3.6.2.1.1 Testing of Coaxial Pipe

Requirement: Coaxial lines (pipe-in-pipe) shall have the provision to pneumatically test both primary and secondary lines for leakage. [Section 14.3, ORD, ROIN: 8-3950 [ID : RPT-OP-01-001 ID#1482]]. (D.1, D.2, G.1, G.2, G.6)

Basis Discussion: None

Verification: Verification is expected to be achieved through the following:

Verif. Method	Verif. By	Plan	Notes/Comments
I	ENG	Review design to verify co-axial pipes have provisions for pneumatically testing primary and secondary lines for leakage.	

3.6.2.1.2 Confinement for Drain and Header Lines Feeding the RLD C3 and C5 Vessels

Requirement: All Lab RLD drain and header lines that feed the Lab RLD C3 and C5 vessels, including those embedded within facility basemat shall be coaxial from the process line source to the point of the vessel cell entry. [Section 4.4.2.2, PDSA-Lab Facility, [ID : WTP-PSAR-ESH-01-002-06 ID#10749]] [Sections 11.3.5.2, 14.10.1.3, BOD, [ID : DB-ENG-01-001 ID#11416], [ID : DB-ENG-01-001 ID#12173], [ID : DB-ENG-01-001 ID#12175]]. (D.2, D-6, G.2, G.6)

Basis Discussion: None

Verification: Verification is expected to be achieved through the following:

Verif. Method	Verif. By	Plan	Notes/Comments
I	ENG	Review design to verify that the drain and header lines feeding the C3 and C5 vessels (RLD-VSL-00164 and 00165) are coaxial.	

3.6.3 System Interface Requirements

3.6.3.1 Plant Service Air – Air Supply

Requirement: The Lab Facility RLD system control valves and instruments shall interface with the PSA system to receive air supply for the motive force to operate control valves and instruments. (L.1)

Basis Discussion: None

Verification: Verification is expected to be achieved through the following:

Verif. Method	Verif. By	Plan	Notes/Comments
I	ENG	Review design to verify the RLD system control valves and instruments interface with the PSA system.	

3.6.4 Other Technical, Specialty, Operations, and Maintenance Requirements

None

3.7 Pump Requirements

3.7.1 Mission and Functional/Performance Requirements (Including States/Modes)

3.7.1.1 Lab RLD Pump Transfer Rate from Sump

Requirement: The minimum transfer rate of the Lab RLD Pumps shall be based on the removal of the bounding source volume from the sump in 24 hours as required by the WAC (WAC-173-303-640[4][c][iv]). [Section 14.10.1.2, BOD, [ID : DB-ENG-01-001 ID#12158]] (B.4, E.4, H.4)

Basis Discussion: The removal of spills or leaks within 24 hours, or as timely as possible. This requirement applies to the following pumps: RLD-PMP-00182A/B, RLD-PMP-00183A/B, and RLD-PMP-00190A/B. The worst case for sump pump operation would be a spill from the largest vessel within a given cell.

Verification: Verification is expected to be achieved through the following:

Verif. Method	Verif. By	Plan	Notes/Comments
I	ENG	Review design to verify that the source volume is defined, measured, and factored into the pump transfer algorithm for each sump pump.	
A	ENG	Perform an analysis to verify that the sumps can be emptied within the 24 hour requirement.	See: 24590-LAB-PER-M-04-0002 Lab Waste Removal Capability for the Effluent Vessel Cells
I	ENG	Review design to verify conformance to the analysis.	

3.7.1.2 Capability of Lab RLD Pump for Transfer

Requirement: The LAB RLD Pumps shall have sufficient capability to transfer effluent from the RLD vessels to the designated destinations.

Basis Discussion: Each RLD vessel is equipped with two transfer pumps for transferring effluent. All pumps should have adequate capacity to perform their intended functions. This requirement applies to following pumps: RLD-PMP-00182A/B, RLD-PMP-00183A/B, and RLD-PMP-00190A/B.

Verification: Verification is expected to be achieved through the following:

Verif. Method	Verif. By	Plan	Notes/Comments
A	ENG	Perform an analysis to determine the required transfer rate and to verify that Lab Facility RLD transfer pumps have adequate capability to transfer the effluent.	See: 24590-LAB-PER-M-04-0002 Lab Waste Removal Capability for the Effluent Vessel Cells
I	ENG	Review design to verify conformance to the analysis.	
D	SU/ COM	Perform a demonstration to verify that the Lab Facility RLD transfer pumps are capable of meeting established transfer rates.	

Verif. Method	Verif. By	Plan	Notes/Comments

3.7.2 Nuclear Safety, ALARA, Environmental and Other Regulatory Requirements

3.7.2.1 Pump Seal

Requirement: Lab RLD process pumping system for fluids that are radiologically or chemically hazardous to personnel shall be configured such that personnel are not exposed to a spray leak in the event of a pump seal failure. [Section 14.1, ORD, [ID : RPT-OP-01-001 ID#1468]]

Basis Discussion: This requirement is decomposed from the ORD. The intent of this requirement is to protect personnel in the event of a centrifugal pump seal failure for a system that contains radiologically or chemically hazardous material. Design measures would be required for hazardous systems in which personnel could be in harm's way in the event of seal failure.

The pumps in Lab RLD pump fluids that would be considered radiologically and chemically hazardous, so that a decomposed version of the requirement should be allocated to that part of the system. The C3/C5 condensate is not believed to be sufficiently hazardous to warrant this requirement. [ALARA]

Verification: Verification is expected to be achieved through the following:

Verif. Method	Verif. By	Plan	Notes/Comments
I	ENG	Review design to verify that the pumps are located in pits or are otherwise designed to preclude leakage of liquids that could lead to exposure to workers or the environment.	

3.7.3 System Interface Requirements

None

3.7.4 Technical, Specialty, Operations, and Maintenance Requirements

None

3.8 Mixing Requirements

3.8.1 Mission and Functional/Performance Requirements (Including States/Modes)

3.8.1.1 General Agitation/Mixing

Requirement: The Lab Facility RLD system vessels shall be agitated and mixed. The agitation system shall be capable of effectively homogenizing the vessel contents for obtaining representative samples. [Sections 6.7.1, 6.7.3, BOD, [ID : DB-ENG-01-001 ID#10424], [ID : DB-ENG-01-001 ID#10417], [Section 14.14, ORD, [ID : RPT-OP-01-001 ID#1545]] (A.5, D.5, G.5)

Basis Discussion: Agitation of the Lab Facility RLD vessels is required to collect a representative sample of vessel contents. Mixing in all Lab RLD vessels is accomplished through recirculating vessel contents. Mixing in the C3 and C5 vessels is augmented with the use of eductors.

Verification: Verification is expected to be achieved through the following:

Verif. Method	Verif. By	Plan	Notes/Comments
A/T	ENG	Perform an analysis and (or) testing to verify that different constituents in a vessel will be blended adequately for samples.	
I	ENG	Review design to verify agitation capability is incorporated.	

3.8.1.2 Re-suspend Solids

Requirement: Lab Facility RLD system shall be capable of re-suspending and maintaining settled solids in the effluent and maintain suspension of solids within the vessels. [Section 6.7.3, BOD, [ID : DB-ENG-01-001 ID#10424]] (A.5, D.5, G.5)

Basis Discussion: The mixing requirement is to re-suspend solids that may have settled after the mixers have been cycled off. This ensures that solids may be re-suspended and transferred out of the vessel.

Verification: Verification is expected to be achieved through the following:

Verif. Method	Verif. By	Plan	Notes/Comments
A/T	ENG	Perform an analysis and (or) testing to verify that the system is capable of re-suspending settled solids and maintaining suspension of solids within the vessels.	

3.8.2 Nuclear Safety, ALARA, Environmental and Other Regulatory Requirements

None

3.8.3 System Interface Requirements

None

3.8.4 Other Technical, Specialty, Operations, and Maintenance Requirements

None

3.9 Monitoring & Controls

3.9.1 Mission and Functional/Performance Requirements (Including States/Modes)

3.9.1.1 Lab RLD Vessels

3.9.1.1.1 Transfer Volume Balances from RLD vessels

Requirement: The PCJ System shall measure and monitor volume balances during transfers from each vessel. [Section 7.1, ORD, [ID : RPT-OP-01-001 ID#1110]] (J.1)

Basis Discussion: The Lab Facility RLD vessels are RLD-VSL-00163, 00164, & 00165. Balance transfers are needed as follows:

- From vessel RLD-VSL-00163 to vessel RLD-VSL-00164, vessel RLD-VSL-00165, and tanker truck.
- From vessel RLD-VSL-00164 to vessel RLD-VSL-00165 and tanker truck.
- From vessel RLD-VSL-00165 to tanker truck.

Verification: Verification is expected to be achieved through the following:

Verif. Method	Verif. By	Plan	Notes/Comments
I	ENG	Review design to verify that the PCJ system measures and monitors volume balances during transfers.	
D	SU/ COM	Verify the PCJ system is capable of measuring volume during transfers.	

3.9.1.1.2 Level Monitoring

Requirement: The Lab Facility RLD vessels (RLD-VSL-00163, 00164, & 00165) shall include level detection capabilities and interface with the process control (PCJ) system to remotely monitor effluent level within the vessels. [Section 14.10.1.1, BOD, [ID : DB-ENG-01-001 ID#12149], [ID : DB-ENG-01-001 ID#12151]] (J.1)

Basis Discussion: Level detection is a component of the batch volume transfer algorithm. [ALARA]

Verification: Verification is expected to be achieved through the following:

Verif. Method	Verif. By	Plan	Notes/Comments
I	ENG	Review design to verify the capability to remotely monitor effluent level within the vessels.	
D	SU/ COM	Demonstrate the capability to remotely monitor vessel level for each of the RLD vessels (RLD-VSL-00163, 00164, and 00165.	

3.9.1.2 Lab RLD Sumps

3.9.1.2.1 Sump Liquid Level Measurement

Requirement: The Lab RLD system shall remotely monitor liquid level in the Lab Facility RLD sumps. (J.1)

Basis Discussion: Sump liquid level is measured to ensure high liquid level in the sump is detected and action is taken to prevent adverse consequences to the RLD system and Lab Facility. Sump level is also monitored for leak detection as required for secondary containment of dangerous waste. This requirement applies to following RLD sumps: RLD-SUMP-00040, RLD-SUMP-00041, RLD-SUMP-00042 RLD-SUMP-00043A, RLD-SUMP-00043B, RLD-SUMP-00044, and RLD-SUMP-00045. [ALARA]

Verification: Verification is expected to be achieved through the following:

Verif. Method	Verif. By	Plan	Notes/Comments
I	ENG	Review design to verify the capability of the Lab RLD system to remotely monitor the liquid level in the sumps.	

Verif. Method	Verif. By	Plan	Notes/Comments
D	SU/ COM	Demonstrate the capability of the Lab RLD system to remotely monitor liquid level in the sumps and send to the PCJ system.	

3.9.2 Nuclear Safety, ALARA, Environmental and Other Regulatory Requirements

None

3.9.3 System Interface Requirements

3.9.3.1 Process Control System – Instruments

Requirement: The RLD system instruments shall use standard commercially available instrumentation and communication protocols to interconnect to the PCJ system. Instruments connected to the PCJ system shall not perform any active safety function. [Sections 9.4.1, 9.4.8, BOD, [ID : DB-ENG-01-001 ID#10963, [ID : DB-ENG-01-001 ID#10995]] (J.1)

Basis Discussion: The PCJ system and fieldbus communication protocols are used as the normal process control system. The PCJ system allows remote operator control and monitoring of the RLD process (e.g., provision for process level and pressure, along with the ability to control and monitor pumps, motors, and valves to operate the RLD system). Instrumentation for normal process control utilize, to the extent practical, Foundation Fieldbus technology and Profibus DP Fieldbus is used where Foundation Fieldbus is not appropriate. Alarms and warnings are provided to bring operator attention to, and allow rectification of abnormal process situations.

Verification: Verification is expected to be achieved through the following:

Verif. Method	Verif. By	Plan	Notes/Comments
I	ENG	Review design to verify the instrumentation, including communication protocols, is designed and procured as commercially available instruments with no active safety function in the interface with the PCJ system.	May be documented in an assessment/evaluation.

3.9.4 Other Technical, Specialty, Operations, and Maintenance Requirements

None.

3.10 Relevant Codes and Standards

3.10.1 Codes of Record

The table below identifies relevant external codes and standards applicable to the Lab RLD design. These are selected from those documents that comprise the Code of Record (COR) as established in 24590-WTP-RPT-ENG-01-001, *Technical Baseline Description*, (i.e., the WTP Contract, the BOD, and the SRD). Use of these documents is typically invoked in the design process through the documents identified in Section 3.10.2. Beyond inclusion here, no attempt is made in this document to extract individual design requirements from these documents for allocation to SSCs.

In some cases, the expected means of verification may be established on the basis of tests or other criteria required

by the codes and standards. This does not necessarily include verification or testing more appropriately defined in the procurement of individual sub-systems or components, or verification or testing that is a routine activity defined by specifications and/or procedures used by construction and startup.

Table 3-6 Lab RLD System Applicable Codes & Standards

Implementing Codes and Standards: [24590-WTP-DB-ENG-01-001, Rev 2, Basis Of Design]
• API STD-610, *Centrifugal Pumps for Petroleum, Heavy Duty Chemical, and Gas Services,* as tailored in Appendix C of the SRD.
• API STD-620, *Design and Construction of Large, Welded, Low-Pressure Storage Tanks*
• AWS D1.1/D1.1 M, *Structural Welding Code – Steel*
• AWS D1.6, *Structural Welding Code - Stainless Steel*
• WAC 173-303, *Washington Administrative Code - Dangerous Waste Regulations*
Implementing Codes and Standards: [24590-WTP-SRD-ESH-01-001-02, Rev 7E, Section 4, *SRD*]
• ANSI/AISC N690-1994, *Specification for Safety-Related Steel Structures for Nuclear Facilities,* as tailored in Appendix C of the SRD.
• ANSI/ANS 58.9-1981, *Single Failure Criteria for Light Water Reactor Safety-Related Fluid Systems*
• ASME B31.3-1996, *Process Piping*, as tailored in Appendix C of the SRD
• ASME B73.1-2001, *Specification for Horizontal End Suction Centrifugal Pumps for Chemical Process,* reaffirmed 2007, as tailored in Appendix C of the SRD.
• ASME B73.2-2003, *Specification for Vertical In-Line Centrifugal Pumps for Chemical Process,* reaffirmed 2008, as tailored in Appendix C of the SRD.
• ASME Section VIII, Division 1, *Boiler and Pressure Vessel Codes, Rules for Construction of Pressure Vessels*
• NFPA 69-2002, *Standard on Explosion Prevention Systems*, as tailored in Appendix C
• NFPA 801-2003, *Standard for Fire Protection for Facilities Handling Radioactive Materials*, as tailored in Appendix C of the SRD
Implementing Codes and Standards: [24590-WTP-PSAR-ESH-01-002-03, Rev 5g, Preliminary Documented Safety Analysis to Support Construction Authorization; Lab Facility Specific Information (PDSA)]
• UBC 1997-*Uniform Building Code (UBC)*

3.10.2 WTP Design Criteria, Design Guides, and General Specifications

This section identifies relevant discipline design criteria, guides, and general specifications applicable to the Lab RLD system. Use of these documents to develop the detailed design of SSCs is governed by engineering procedures. The majority of requirements contained within these documents is derived from external codes and standards or are specified methods and approaches to achieve standardization and consistency of design. Beyond inclusion here, no attempt is made in this document to extract individual design requirements from these documents for tracing and verification, or to define how direction provided by these documents is applicable and allocated (or not) to individual SSCs.

Table 3-7 WTP Design Criteria, Design Guides, and General Specifications Applicable to Lab RLD

Document Number	Title
Design Criteria Documents:	
24590-WTP-DC-M-06-001	Mechanical Systems Design Criteria
24590-WTP-DC-E-01-001	Electrical Design Criteria
24590-WTP-DC-ENG-06-001	Design Criteria for Environmental and Natural Phenomena Hazard Qualification of Structures Systems and Components
24590-WTP-DC-PS-01-001	Pipe Stress Design Criteria Including "Pipe Stress Criteria" and "Span Method Criteria"
24590-WTP-DC-PS-01-002	Pipe Support Design Criteria
24590-WTP-DC-PS-03-001	Jumper Stress Design Criteria
24590-WTP-DC-ST-04-001	Seismic Analysis and Design Criteria
Design Guides:	
24590-WTP-GPG-ENG-004	Pipe Stress, Pipe Layout, and Support Spacing
24590-WTP-GPG-ENG-005	Engineering Design Guide for Pipe Support
24590-WTP-GPG-ENG-086	Equipment Environmental Qualification
24590-WTP-GPG-ENG-0094	Pipe Design Work Process
24590-WTP-GPG-ENG-0099	Design Verification of Plant Design Deliverables
24590-WTP-GPG-ENG-0103	Equipment Seismic Qualification
24590-WTP-GPG-ENG-0109	Accessibility Review of Equipment and Components
24590-WTP-GPG-ENG-0118	Piping Component Stock Codes
24590-WTP-GPG-ENG-0119	Isometric Drawings Production
24590-WTP-GPG-ENG-0127	Processing Engineering Calculations
24590-WTP-GPG-ENG-0129	Waste Acceptance Impacting Determination
24590-WTP-GPG-ENG-0130	Waste Acceptance Impacting Item Qualification Plan
24590-WTP-GPG-ENG-0141	WTP Radiation Damage Thresholds for Non-Metallic Materials
24590-WTP-GPG-ENG-0144	Piping Interface with Flexible Equipment-Stress Analysis Design Guide
24590-WTP-GPG-ENG-0145	SC-IIIE Piping - Stress Analysis Design Guide
24590-WTP-GPG-ENG-0146	Piping Coating System Selection Guide
24590-WTP-GPG-ENG-0150	Plant Design/Mechanical Systems Equipment Interfaces: Terminal End Equipment
24590-WTP-GPG-ENG-0159	Single Failure Analysis Process for Mechanical, HVAC, and Control Systems
24590-WTP-GPG-ENG-0165	Pipe Stress and Supports Confirmation
24590-WTP-GPG-J-005	Control Systems Interfaces
24590-WTP-GPG-J-014	Control Systems Design Process Guide
24590-WTP-GPG-J-016	Control Valve Sizing
24590-WTP-GPG-J-017	WTP Seismic Category Application to C&I Systems
24590-WTP-GPG-M-002	Hydraulic Seals
24590-WTP-GPG-M-008	Cell Sumps and Sump Pumps
24590-WTP-GPG-M-011	Pipe Sizing for Compressible Flow

Table 3-7 WTP Design Criteria, Design Guides, and General Specifications Applicable to Lab RLD

Document Number	Title
24590-WTP-GPG-M-012	Pump Net Positive Suction Head
24590-WTP-GPG-M-013	Plant Wash System Design
24590-WTP-GPG-M-017	Design Parameters & Test Pressures for Equipment & Piping
24590-WTP-GPG-M-019	Vessel Sizing
24590-WTP-GPG-M-022	Liquid and Vapor Line Sizing By Formula
24590-WTP-GPG-M-023	Other Losses in Piping Systems
24590-WTP-GPG-M-027	Recommended Slopes for Piping Systems
24590-WTP-GPG-M-028	Vent, Drain, and Root Valve Sizing and Selection for Piping Systems
24590-WTP-GPG-M-032	Vessel Overflow and Gravity Line Sizing
24590-WTP-GPG-M-036	Determining Quality Level and Seismic Category Classification of Sub-Components, Assemblies, Sub-Assemblies, and Parts
24590-WTP-GPG-M-047	Preparation of Corrosion Evaluations
24590-WTP-GPG-M-050	Pressure Vessel and Heat Exchanger Design
24590-WTP-GPG-M-052	Specifying Design Cycles for Equipment and Piping
24590-WTP-GPG-M-0059	Avoiding Chemical Line Plugging - Plant Design Considerations
24590-WTP-GPG-M-0061	Vessel Structural Analysis and ASME Section VIII Evaluation
24590-WTP-GPG-P-0003	Jumper Design Guide
24590-WTP-GPG-PL-002	Plant Design Material Control Guide
24590-WTP-GPG-SRAD-001	Design Guide for ALARA
24590-WTP-GPG-PR-004	Preparation of Process Corrosion Data Sheets
General Specifications:	
24590-WTP-3PS-FB01-T0001	Engineering Specification for Structural Design Loads for Seismic Category III & IV Equipment and Tanks
24590-WTP-3PS-G000-T0002	Engineering Specification for Positive Material Identification (PMI) for Shop Fabrication
24590-WTP-3PS-G000-T0015	Engineering Specification for Environmental Qualification of Mechanical Equipment
24590-WTP-3PS-JQ00-T0004	Engineering Specification for Management of Supplier Software
24590-WTP-3PS-JQ06-T0005	Engineering Specification for Environmental Qualification of Control and Electrical Systems and Components
24590-WTP-3PS-JQ07-T0001	Engineering Specification for Instrumentation for Package Systems
24590-WTP-3PS-M000-T0001	Engineering Specification for Air Displacement Slurry Pumps
24590-WTP-3PS-MACS-T0003	Engineering Specification for Mechanical Agitators
24590-WTP-3PS-MVB2-T0001	Engineering Specification for Welding of Pressure Vessels, Heat Exchangers and Boilers
24590-WTP-3PS-MV00-T0001	Engineering Specification for Pressure Vessel Design and Fabrication
24590-WTP-3PS-MV00-T0002	Engineering Specification for Seismic Qualification Criteria for Pressure Vessels
24590-WTP-3PS-MV00-T0003	Engineering Specification for Pressure Vessel Fatigue Analysis

Table 3-7 WTP Design Criteria, Design Guides, and General Specifications Applicable to Lab RLD

Document Number	Title
24590-WTP-3PS-NWP0-T0001	Engineering Specification for General Welding and NDE Requirements for Supplier Fabricated Piping
24590-WTP-3PS-PS02-T0001	Engineering Specification for Shop Fabrication of Piping
24590-WTP-3PS-SS00-T0001	Engineering Specification for Welding of Structural Carbon Steel
24590-WTP-3PS-SS00-T0002	Engineering Specification for Welding of Structural Stainless Steel and Welding of Structural Carbon Steel to Structural Stainless Steel

4 System Description

This section summarizes design output information, describing the current design and the operational and maintenance aspects of the system. The information provided below does not contain design requirements and should not be used as design input. The description of the current design contained in this section may not fully align with design requirements. This is acceptable within the context of this document. Areas of misalignment are to be resolved through appropriate mechanisms and the SDD updated to reflect changes made to the design. Changes to the descriptive text will be made following the changes to the lower tiered Engineering documents.

The Lab RLD system collects liquid effluents from throughout the Lab and provides interim storage before transfer to other facilities.

Figure 4-1 Lab RLD System Simplified Process Flow Diagram

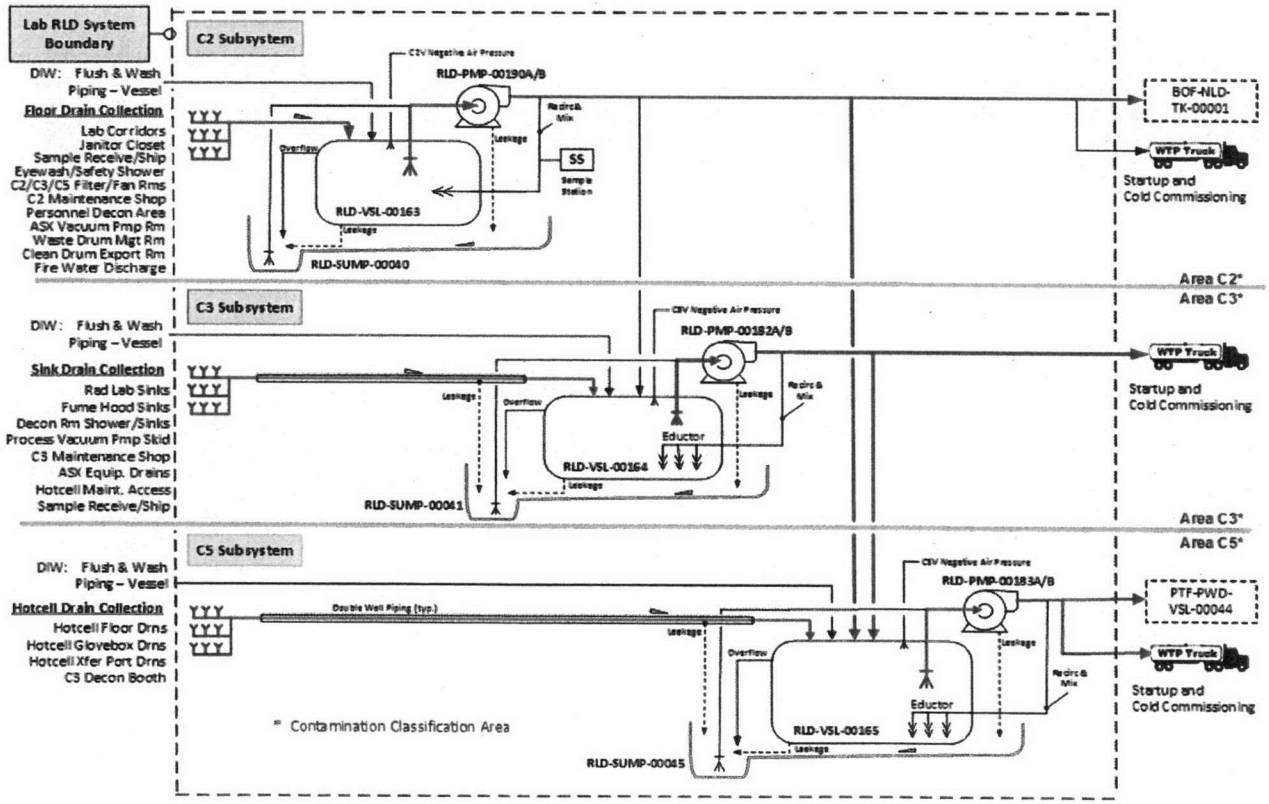

4.1 Configuration Information

The Lab RLD system is divided into three subsystems (C2, C3, and C5) according to the radiological classification of the areas within the Laboratory they serve. Each subsystem includes a collection drain piping network, a collection vessel, a pair of transfer pumps, and sumps for leak detection. The C3 and C5 subsystems also include leak detection boxes for leak detection from coaxial pipes. The pumps and vessels are located within cells located below grade. The collected effluent is transferred either to the BOF NLD system or to the PT Facility system. Prior to hot commissioning, the effluent may be transferred to a tanker truck if the other facilities are not ready to receive effluent. Simplified process flow diagrams for the RLD C2, C3, and C5 subsystems are shown in Figure 4-1. [3.4.1.1.1, 3.4.1.1.2, 3.4.1.1.3, 3.4.2.2.8]

The Floor Drain Collection Vessel (RLD-VSL-00163) collects, contains, and transfers non-contaminated liquid effluent. Although the Floor Drain Collection Vessel is identified as part of the RLD system, it is not designed or permitted to manage mixed or dangerous wastes. If a spill or release were to occur that contaminated this vessel, the vessel would be discharged to the Laboratory Area Sink Collection Vessel (RLD-VSL-00164) or the Hotcell Drain Collection Vessel (RLD-VSL-00165) and rinsed with water prior to being returned to service.

4.1.1 Description of System, Subsystems, and Major Components

4.1.1.1 Seismic Levels

The SSCs in the Lab RLD system are seismic category IV, except for those items described below.

Certain features of the Analytical Laboratory comprise the passive confinement boundary for radiological contamination. Those features pertinent to the Lab RLD system include the following and are designated safety significant (SS) and seismic category III (with the exception of the interior walls of the C5 pump and piping pits).

- The C5 effluent vessel cell (Room A-B004). [3.4.2.1.1, 3.4.2.1.2]
- The C5 pump pits (Rooms A-B005/A-B007) and the C5 piping or valve pit (Room A-B006).
- The portion (within the C5 vessel cell) of the exterior jacket of the transfer line from the C3 vessel cell to the C5 vessel cell. [3.4.2.1.1, 3.4.2.1.2]
- The portion (within the C5 vessel cell) of the exterior jacket on the truck transfer line and the flange on the truck side of the transfer pipe in the C5 cell. [3.4.2.1.1]
- The portion (within the C5 vessel cell) of the exterior jacket on the transfer line to the PT Facility. [3.4.2.1.1]
- The portion of the exterior jacket on the drain lines between the hotcell glove boxes (located outside the hotcells) and the basemat penetration. [3.4.2.1.1, 3.4.2.1.2]

The following items have been designated as non-safety and seismic category SC-III due to air permit requirements.

- The C5 ventilation exhaust duct from the C5 effluent vessel cell (Room A-B004). This SSC is seismic category SC-III. [3.4.2.1.1]
- The HEPA filter (RLD-HEPA-00015) for the C5 pits and cells, and the associated inbleed piping/duct from the filter to the pits, and from the pits to the vessel cell.

The following items have been designated as non-safety) and seismic category SC-IV (except where noted) to provide confinement of radioactive liquids and the prevention of spills or spray releases into potentially occupied areas. [3.4.2.1.1]

- The double check valve backflow preventer assembly (RLD-BFP-00001).
- The DIW piping from RLD-BFP-00001 to the C5 pits.
- The hotcell drain collection vessel (RLD-VSL-00165).
- The RLD pump and valve pits and C5 vessel cell (for shielding). The C5 vessel cell is designated as SC-III. [3.4.2.1.1]
- Piping to the hot cell drain collection vessel (limited to two pipelines: the hotcell and glove box drain collection headers).

- The C5 RLD transfer line (inner pipe) from the C5 vessel to five feet outside the Lab Facility. This line is designated as SC-III. [3.4.2.1.1]

4.1.1.2 Chemistry and Technology

The RLD system merely collects liquid effluent generated within the Laboratory and does not have the capability to treat or alter its composition. The effluent from the C2 areas is generated primarily from the test water for the emergency showers and eyewashes and will also include water from the janitorial cleaning. The chemical composition of the effluent sent to RLD-VSL-00163 should thus resemble that of the Domestic (potable) Water supply (DOW) with minor amounts of solids and detergents added from janitorial cleaning of floors.

The effluent from the C3 areas is comprised primarily of the liquid wastes generated within the Analytical Radiological Laboratory (ARL) and disposed of through Laboratory sinks and cupsinks within the fume hoods. This effluent includes flush water (about 0.5 gallons per sample) which will comprise the bulk of the effluent volume. Since solids and immiscible organic chemicals are separated from the sample and analytical wastes in the C3 Laboratory and disposed of as solid waste, the residual amount of solids and organic chemicals in the effluent sent to RLD-VSL-00164 will be minimal. Miscible organics (alcohols) will not be separated and will be sent to RLD-VSL-00164 if present in the effluent from the ARL to the RLD. The effluent will contain inorganic chemicals from the samples, analytical standards and calibration fluids, and other chemicals used in the sample analyses.

The effluent from the C5 areas is comprised primarily of the liquid wastes generated within the Analytical Hotcell Laboratory (AHL) and disposed of through floor drains within the individual hotcells. This effluent includes flush water (about 0.5 gallons per sample) which will comprise the bulk of the effluent volume. Effluent is also received through drains in the hotcell gloveboxes and sample import/export boxes. The effluent from the hot cells drains to RLD-VSL-00165. Since solids and immiscible organic chemicals are separated from the sample and analytical wastes in the hotcell Laboratory and disposed of as solid waste, the residual amount of solids and organic chemicals in the effluent sent to RLD-VSL-00165 will be minimal. The effluent will contain inorganic chemicals from the samples, analytical standards and calibration fluids, and other chemicals used in the sample analyses.

4.1.1.3 Effluent Characterization

Effluent discharged to NLD-TK-00001 in the BOF must meet the discharge criteria for the TEDF. To verify that the contents of RLD-VSL-00163 are suitable to send to the BOF NLD system, the effluent must be characterized prior to transfer. Characterization is a process or set of administrative controls used to validate the effluent conditions and may or may not include sampling. This process and the NLD discharge criteria are more fully described in the WTP NLD System Description.

4.1.1.4 RLD C2 Subsystem

The RLD C2 subsystem collects liquid effluents from the C2 areas of the analytical Laboratories. It is comprised of a floor drain piping network, the floor drain collection vessel (RLD-VSL-00163), and two 100% capacity pumps (RLD-PMP-00190A/B).

Vessel RLD-VSL-00163 is located in a cell (Room A-B001) underneath the C2/C3 filter/fan room (Room A-0160) in the Lab and receives effluent from the C2 areas of the Lab, including fire water. The floor drain collection vessel (RLD-VSL-00163) is made of 316L stainless steel to ensure containment for a 40 year life. The vessel is equipped with level instrumentation used to maintain the vessel level within the acceptable operating

range. In the event of a fire or upset condition, the effluent overflows into the cell. The cell includes a sump with leak detection instrumentation to detect leaks and overflows. [3.4.1.2.1, 3.5.1.1.2, 3.5.4.1.1, 3.9.1.2.1]

Two 100% capacity pumps (RLD-PMP-00190A/B), which are self-priming, magnetic-drive, centrifugal pumps, are installed to recirculate the contents of vessel RLD-VSL-00163 for agitation and sampling purposes, and to transfer the vessel contents. The pumps are located on an elevated platform in the cell containing the floor drain collection vessel. Sampling capability for RLD-VSL-00163 is provided by a sample station off the discharge of the recirculation line. Pressure and temperature instrumentation is included on the piping downstream or upstream to monitor the conditions of the effluent during transfers or vessel mixing operations. [3.8.1.1]

During routine operations, the C2 liquid effluent is transferred to the Laboratory area sink drain collection vessel (RLD-VSL-00164), the hotcell drain collection vessel (RLD-VSL-00165), or the NLD storage tank in BOF (NLD-TK-00001). Prior to hot commissioning, it may be transferred to a tanker truck. The tanker truck should provide an air gap or backflow preventer downstream of the connection to the RLD piping. The pumps are also used to empty the contents of the sump (RLD-SUMP-00040) in the non-routine event that the sump fills with fluid. [3.4.3.1.1]

Vessel RLD-VSL-00163 is vented to the C2 ventilation system. Airflow is maintained through the C2 drain collection network, RLD-VSL-00163, and into the HVAC C2 exhaust system due to the pressure depression induced by the C2V fans. This design minimizes the potential for cross-contamination between C2 areas without the use of loop seals. The vessel cell is also vented to the C2 system. The cell is more fully described in Section 4.1.1.7. [3.4.3.1.1]

4.1.1.5 RLD C3 Subsystem

The RLD C3 Subsystem collects effluent from the Radiological Laboratories including the cupsinks within the fume hoods. It consists of a drain line network, the Laboratory area sink drain collection vessel (RLD-VSL-00164), and pumps RLD-PMP-00164. [3.5.1.1.3]

RLD-VSL-00164 is located in a stainless steel lined cell underneath the C2/C3 filter/fan room (Room A-0160) in the Lab. RLD-VSL-00164 is made of a 6 % molybdenum alloy to ensure containment for a 40 year life. The vessel is equipped with level instrumentation used to maintain the vessel level within the acceptable operating range and detect primary containment leakage. The vessel is also equipped with wash rings for vessel wash down and three tank mixing eductors (TMEs). The TMEs are venturi jet devices that use pressurized liquid to entrain solids and mix the vessel contents. [3.4.1.2.1, 3.8.1.1]

Pumps RLD-PMP-00182A/B are 100% duty self-priming, magnetic-drive, sealless centrifugal pumps and are equipped with electrical plugs, rather than hard-wired, for ease of removal. The pumps wetted surfaces are constructed of 316 stainless steel. The pumps are located in a pump pit (Room A-B002) which is located within the footprint of the vessel cell but above the cell floor. The pumps discharge the contents of RLD-VSL-00164 to RLD-VSL-00165 during routine operations, recirculate the contents of RLD-VSL-00164, or empty the sump (RLD-SUMP-00045) located within the pump pit. Prior to hot commissioning, it may be transferred to a tanker truck. The tanker truck should provide an air gap or backflow preventer downstream of the connection to the RLD piping. Clamp (Grayloc) connections on the connecting piping and special fasteners for anchorage of the pump base plate facilitate removal of the pumps. Pressure, flow, and temperature instrumentation is included on the piping downstream or upstream to monitor the conditions of the effluent during transfers or vessel mixing operations. [3.4.3.1.1, 3.8.1.1]

The space to accommodate an alternate destination of the C3 effluent is available. This possible future connection would require the installation of a new spool piece within the C5 piping pit (Room A-B006) to allow the transfer to bypass RLD-VSL-00165 and be routed directly to the PT Facility plant wash vessel (PWD-VSL-00044).

Vessel RLD-VSL-00164 is vented to the C5V system. Air flow into the vessel is provided through some of the drain lines due to the pressure depression induced by the C5V fans. The pump pits and vessel cell are also vented to the C5V system.

4.1.1.6 RLD C5 Subsystem

The RLD C5 subsystem collects effluent from the hot cells, glove boxes, and other equipment associated with the hot cells. The subsystem includes drain headers, vessel RLD-VSL-00165, and transfer pumps RLD-PMP-00183A/B. [3.5.1.1.4]

RLD-VSL-00165 is located in cell A-B004 which is beneath the C5 pump maintenance room (A-0167). The hot cell drain collection vessel (RLD-VSL-00165) is made of a 6 % molybdenum alloy to ensure containment for a 40 year life. The vessel is equipped with level instrumentation used to maintain the vessel level within the acceptable operating range. The vessel is also equipped with wash rings for vessel wash down and eight TMEs. [3.4.1.2.1]

The hot cell drain collection vessel pumps (RLD-PMP-00183A/B), which are self-priming, magnetic-drive, sealless centrifugal pumps, are installed to discharge the contents of vessel RLD-VSL-00165 during routine operations and to discharge the contents of sump RLD-SUMP-00042 in the off-normal event that the sump fills with fluid. The pumps wetted surfaces are constructed of 316 stainless steel. The pumps are hard-wired in junction boxes outside the pit. Prior to hot commissioning, the effluent can be transferred to a tanker truck. The hot cell drain collection vessel pumps (RLD-PMP-00183A/B) are located in pump pits A-B005 and A-B007 which are within the footprint of the vessel cell but above the level of the floor and vessel. A valve pit, B-0006, is located between the pump pits and contains piping, valves, and instrumentation. Pumps RLD-PMP-00183A/B and valves are located in separate pits due to ALARA considerations during postulated maintenance activities. Clamp (Grayloc) connections on the connecting piping and special fasteners for anchorage of the pump baseplate facilitate removal of the pumps without having to make entries into the pit. Pressure and temperature instrumentation is located on the suction and discharge side of the piping to monitor effluent conditions during transfers or mixing operations. The valve actuators are located above the cover plate to allow for easy access for maintenance. Some valves also have handwheels or reach rods for manual operation. [3.4.4.3.2, 3.8.1.1]

The partially stainless steel lined cell area provides secondary containment and the associated sump is equipped with leak detection. The cell area is used to collect any vessel overflow or leakage from the RLD. Areas above the liner are bare concrete and exposed steel that are not designed to support decontamination. [3.5.2.1]

Vessel RLD-VSL-00165 is vented to the C5 ventilation system. Airflow is maintained through the C5 drain collection network, RLD-VSL-00165, and into the HVAC C5 exhaust system due to the pressure depression induced by the C5V fans. This design minimizes the potential for cross contamination between the hotcells without the need for loop seals. [3.4.3.1.1]

4.1.1.7 Cells

There are two cells and one vault associated with the RLD System as listed in Table 4-1.

Table 4-1 Cells and Sumps for RLD Vessels

Cell Name	Room No.	Vessel	Sump
C2 Fire Water Vault (C2 cell)	A-B001	RLD-VSL-00163	RLD-SUMP-00040
C3 Effluent Vessel Cell (C3 cell)	A-B003	RLD-VSL-00164	RLD-SUMP-00041
C5 Effluent Vessel Cell (C5 cell)	A-B004	RLD-VSL-00165	RLD-SUMP-00042

The cells (and vault) are structural compartments that house the respective RLD vessels. In this document the C2 Vault is also referred to as the "C2 Cell" or the "C2 Fire Water Vault". All three "cells" are sized to accommodate the volume of the associated vessel, the associated vessel piping, and the associated fire water overflow volume. [3.4.4.2.4, 3.5.4.1.1]

In the C3 and C5 Cells, the floors and the perimeter walls, up to the maximum height of the fire water overflow volume, are covered by a stainless steel liner. Similarly, the floor and walls of the C2 Cell are concrete sealed by special-protective coating.

Each cell includes a sump as listed in Table 4-1 and the floors of the cells are sloped to direct potential leakage occurring within the cell to their respective sumps. Level instrumentation associated with each sump monitors the sumps for signs of accumulated leakage from the respective cell area. [3.9.1.2.1]

The cells are provided with a wash station (C2) or wash rings (C3 and C5) to support maintenance activities or facilitate decontamination in the event of a spill. The washwater is collected in the respective cell sump. [3.4.4.4.2]

With the exception of the C5 Cell, the cell sumps can be emptied by the either of the respective RLD pumps. In the case of the C5 Cell, the C5 vessel cell sump (RLD-SUMP-00042) is emptied only by RLD-PMP-00183A. The sumps are a component of the secondary containment system for the regulated-waste vessels. Therefore, wastes collected in the cell areas of the Laboratory area sink drain collection vessel and hotcell drain collection vessel are emptied within 24 hours or as practical. The floor drain collection vessel sump, as a sump for a non-regulated vessel, will be emptied to meet operational needs.

The C2 Cell is designed for regular personnel access. Conversely, the C3 and C5 Cells have access-plug openings for human access. However, planned personnel entries in these areas will be restricted.

4.1.1.8 Pits

There are four pits associated with the RLD System as listed in Table 4-2.

Table 4-2 Pits and Sumps for RLD Pumps and Piping

Cell Name	Room No.	Equipment	Sump	Removable Sump Weir
C3 Pump Pit	A-B002	RLD-PMP-00182A/B	RLD-SUMP-00045	RLD-TWDVC-00003
C5 Pump Pit (south)	A-B007	RLD-PMP-00183A	RLD-SUMP-0043A	RLD-TWDVC-00002A
C5 Piping Pit	A-B006	YVs and Piping for RLD-PMP-00183A/B	RLD-SUMP-00044	RLD-TWDVC-00001
C5 Pump Pit (north)	A-B005	RLD-PMP-00183B	RLD-SUMP-00043B	RLD-TWDVC-00002B

The pits are structural compartments that house maintainable equipment in segregated locations where the equipment is readily accessible for maintenance and remote manual operation, the area can be readily decontaminated to support maintenance activities, and the equipment is shielded from high radiation fields emanating from the vessels. [3.4.2.1.4]

The pits are partially lined with stainless steel for secondary containment and ease of decontamination prior to anticipated maintenance activities in the area. Each pit includes a sump. The sumps are sloped floors in each cell. The floors of the pits are sloped to direct potential leakage to their respective weirs, located at the low point drain. The pits confine any leaks or releases within the cell. The sumps collect potential leakage from the pumps, valves, or piping in the area. Instrumentation associated with each sump monitors the sumps for signs of accumulated leakage from the respective pit area. [3.4.2.2.3]

Each sump is plugged by a removable weir. The weir allows the liquid to be held up long enough to be detected. Once the level reaches the height of the weir, the liquid goes down the drain. With the weir installed, a detectable level is formed in the sump to allow the level detection instrumentation to sense potential leaks. Persistent leakage spills over the weir and returns to the respective vessel. In the event that leakage is detected, an operator manually withdraws the weir from the sump via an extended drive spindle and allows the sump to drain. The operator then diagnoses the source of the leak. The weir may also be withdrawn during maintenance to preclude the accumulation of a residual volume of washwater in the sump. [3.4.2.2.8]

The pits are provided with wash rings to support maintenance activities or facilitate decontamination in the event of a spill. The drain lines from the pit sumps to the vessels are sized to handle the anticipated washwater flow. This capacity is anticipated to bound postulated moderated-energy cracks of the regularly-pressurized pump discharge piping.

Access to the pits is achieved via the removal of the pit covers. The pit covers for the C5 pump pits and the C5 piping pit are coated carbon steel panels. The C5 pump pit covers include an opening for the lifting and removal of a weir. The C5 valve pit covers include openings for the removable weir, automated valves, manual valves, and instrumentation. The valve sleeve design and the instrumentation layout, combined with the openings in the pit cover allows for maintenance of the valves and instrumentation without the removal of the pit cover. The pit cover for the C2 and C3 pits consists of a number of removable panels designed to remain within the lifting weight of the available forklift capacity. Each panel consists of checkered plate fastened above metal decking. Each panel is designed to accommodate the wheel loads of the anticipated vehicular traffic in the area. One of the panels of the C3 pit cover includes an access lid for lifting of the removable weir for the C3 pit sump. [3.4.2.1.4]

4.1.1.9 Piping and Materials

System piping is generally 316L stainless steel. Piping from the AHL and ARL process drains up to and including the respective collection vessel is typically a higher-grade alloy due to the goal of achieving a 40-year design life without concerns for operational upset (e.g., failure to properly flush after disposal of a sample). In these cases, the piping is typically Hastelloy® C-22® (N06022) and the vessels are 6% molybdenum alloy (N08367). [3.4.1.2.2]

The drain lines from the C2, C3, and C5 areas of the Laboratory are all free-draining or sloped to allow the effluent to gravity drain to its respective vessel. The pipes that convey dangerous wastes from one containment area to another are double-walled. The jackets of the double-wall piping are typically carbon steel. In areas where ease of decontamination of the pipe exterior is important, the jacket is stainless steel. The double-wall pipe is sloped without pockets to ensure that the jacket drains to its corresponding leak detection box or to a pit that is

monitored for leakage. The slope for double-wall pipe is sufficient to ensure that applicable leak detection criteria are satisfied. [3.4.2.2.7, 3.4.2.2.8, 3.6.2.1.2]

The drain collection piping generally includes cleanouts at changes of direction greater than 45 degrees and at a maximum interval of 100 feet based on conventional sanitary drainage system practices. Cleanouts have been omitted where there is the potential for establishing communications between C5 and C2 areas or between the C5 cell boundary and the balance of the Lab Facility.

Pressurized waste transfer piping and all other piping is designed as free draining, with the exception of the cup sink drains in the fume hoods within the Analytical Radiological Laboratory. These drains include loop seals to prevent excessive inflow of air into the C5V system.

The portions of the pumped lines which are located outside of the vessel cells, which provide secondary containment, are double-walled. This includes the transfer piping from RLD-VSL-00164 to RLD-VSL-00165 or the tanker truck connection, and transfer line from RLD-VSL-00165 to PWD-VSL-00044 and tanker truck connection. The transfer lines between vessels discharge into the top head of the receiving vessels, without a dipped pipe, to prevent potential back-siphoning. [3.4.2.2.10]

Connections are provided for flushing of the C2, C3, and C5 pressurized transfer lines using DIW. The system piping has been evaluated to allow for hot water flushing for purposes of decontamination and dose rate reduction. Infrequent temperature excursions up to temperatures of 165 °F were considered in these evaluations. The materials selected for the vessels, piping, and pumps are compatible with the expected effluent composition and possible decontamination chemicals.

These lines are free draining to allow effluent to drain back to the source vessel or sump or to the destination vessel upon completion of the transfer. High point vents are included where appropriate for testing purposes. Block valves are included to allow isolation and removal of equipment and instrumentation for maintenance or replacement. Low point drains allow the system to be drained prior to maintenance.

The DIW system provides water to wash rings for the C3 and C5 vessels, wash headers for the C3 and C5 pits and cells; and to the C2, C3, and C5 transfer lines for flushing. These lines are free draining to allow the DIW to drain to the source vessel or sump completion of the transfer.

The flush line to the C2 transfer line includes a normally closed manual block valve to isolate the connection between the DIW and the C2 vessel effluent, which is normally expected to be clean. The flush line to the C3 transfer line includes multiple manual and control valves with a drain path back to the headspace of the C3 vessel. A backflow preventer and check valve is included on the DIW flush line connection to the C5 transfer line to provide isolation between the DIW and effluent lines. [3.4.3.2.1]

The vessel wash rings are located above the maximum liquid level in the vessels which provides an air gap between the DIW and the effluent. Likewise, the wash headers for the cell liners are located at the top of the stainless steel liners which is at or above the maximum credible flood level within the cells.

4.1.1.10 Special Secondary Containment Features

The RLD System collects dangerous wastes from the Rad Lab, Sample Receiving/Shipping, the Decon Shower, the Decon Sink, the C3 Maintenance Sink, and the Process Vacuum Air System (PVA) skid areas. In the first five areas, the RLD design includes drain pans and leak test plugs for the double-wall piping annuli. These features are located in cabinets or stands under each fixture. The drain pans direct potential leaks under the sinks to the annuli of the waste collection headers so that these areas are monitored for leakage along with the

associated collection piping. Machine-screw holes tapped in the test plugs allow communication with the drain pan and allow for periodic pneumatic pressure tests of the collection pipe annuli.

4.1.1.11 Leak Detection

The Lab has leak detection boxes connected to the headers draining into the hotcell drain collection vessel (RLD-VSL-00165) and the Laboratory area sink drain collection vessel (RLD-VSL-00164). The C3 transfer line between RLD-VSL-00164 and RLD-VSL-00165 is also monitored for leakage by a leak detection box. The leak detection boxes are designed to detect a leak in the annular space between the double-walled piping. Each box is installed with a drain plug in the closed position to facilitate collecting a detectable volume of leaked waste. Upon detection of a leak, the control system alarms, the operator can lift the plug to drain the leak detection box. An overflow plug can be installed in the overflow drain to allow secondary containment pneumatic testing. The leak detection boxes for the C3 drain collection headers drain to the C3 vessel cell sump (RLD-SUMP-00041). The leak detection boxes for the C5 drain collection headers and the C3 transfer line for the Laboratory area sink drain collection vessel (RLD-VSL-00164) drain to the C5 vessel cell sump (RLD-SUMP-00042). The sumps associated with the cells containing RLD-VSL-00163, RLD-VSL-00164, and RLD-VSL-00165 are also provided with leak detection. Additionally, the cell and pump and piping pit sumps associated with RLD-VSL-00164 and RLD-VSL-00165 are provided with leak detection. [3.4.2.2.8]

4.1.1.12 Special Features

All six pumps in the RLD System are fitted with conical startup strainers to prevent construction debris from being entrained by the pumps during commissioning. The startup strainers will be removed prior to the start of cold commission. Whenever possible, the strainers have been located between the remotely-operated clamp (Grayloc) connections to facilitate their removal and to permit the future installation of a solid spool-piece (jumper) section.

The C3 and C5 vessel are each fitted with a nozzle designated for future use. The nozzles are fitted with a shield plug located at grade elevation. The nozzles and plugs provide direct vertical access to the vessel contents and vessel internals from an accessible area. The shield plug design satisfies applicable requirements for radiation shielding, C5 cell boundary confinement, ALARA, and maintainability. [3.4.4.4.3]

A backflow preventer is installed to check backflows, prevent back-siphonage, and mitigate the migration of radioactive material into the DIW from the PT Facility transfer line. The backflow preventer is a double check valve type backflow preventer with minor modifications for use in a radioactive system. [3.4.3.2.1]

4.1.2 Boundaries and Interfaces

The RLD system receives effluent from several systems within the Lab. This section identifies the other systems which interface with the Lab RLD system. These include systems within the analytical Laboratory, those within other facilities, and plant-wide systems.

4.1.2.1 Lab Systems Interfacing with the RLD System

Those systems within the analytical Laboratory which interface with the Lab RLD system are discussed in this section.

4.1.2.1.1 AHL System

The C5 RLD system receives effluent from the AHL system through the floor drains located within the hot cells.

4.1.2.1.2 ARL System

The C3 RLD system receives effluent from the ARL system through the cupsinks located within the ARL hoods.

4.1.2.1.3 C2V System

The C2 RLD vessel, RLD-VSL-00163, is connected to the C2V system by the vessel vent line. Air flow into the vessel head space is provided through the C2 floor drain headers. The C2 vault is also connected to the Lab C2V system by piping. Air flow into the vault is by in-leakage through the vault cover plates.

4.1.2.1.4 C3V System

The headspace of the C3 RLD vessel, RLD-VSL-00164, is connected to the C3V system by the vessel vent line. Air flow into the vessel head space is provided through some of the C3 drainlines. The cupsinks located in the fume hoods within the analytical Laboratory contain a loop seal. Immediately downstream of the loop seal is a tubing connection to the C3V system within the fumehood. The drainlines from the analytical Laboratory thus have two connections to the C3V system. The C3 pump pit and vessel cell are also connected to the C3V system by piping. Air flow into the pit and cell is through a HEPA filter located within a C2 area.

4.1.2.1.5 C5V System

The headspace of the C5 RLD vessel, RLD-VSL-00165, is connected to the C5V system by the vessel vent line. Air flow into the vessel head space is provided through the C5 drainlines from the hotcell Laboratories and the gloveboxes. The C5 pump and piping pits, and the vessel cell are also connected to the Lab C5V system by piping. Air flow into the pits and cell is through a HEPA filter located within a C2/C3 area.

4.1.2.1.6 Chilled Water (CHW) System

The RLD system receives condensate from two C5V inbleed cooling coils.

4.1.2.1.7 DIW System

Connections to the DIW system are included to provide DIW for line flushes and vessel decontamination for the C2, C3, and C5 transfer lines, vessels, as well as the C3 and C5 pits and cells. [3.5.3.2]

4.1.2.1.8 DOW System

The RLD system receives effluent from utility sinks, C3 Laboratory sinks, and the discharge line from a pressure safety valve (PSV). Test water for eyewashes and emergency showers are also sent to the RLD system.

4.1.2.1.9 Fire Protection Water (FPW) System

The RLD system receives fire water from the FPW system through floor drains, Laboratory hood cupsinks, and hot cell and glove box drains.

4.1.2.1.10 Laboratory In-cell Handling (LIH) System

The RLD system receives effluent from the sample import/export transfer trays.

4.1.2.1.11 PVA System

The RLD system receives effluent from the PVA receiver vessel.

4.1.2.1.12 PSA System

The PSA system provides air for the control valve actuators in the RLD system.

4.1.2.2 PT Facility Systems Interfacing with the Lab RLD System

Those systems within the Pretreatment Facility which interface with the Lab RLD system are discussed in this section.

4.1.2.2.1 PWD System

The contents of RLD-VSL-00165 are transferred to the PTF PWD system for further processing. [3.5.3.3]

4.1.2.3 BOF Systems Interfacing with the Lab RLD System

Those systems within the Balance of Facilities which interface with the Lab RLD system are discussed in this section.

4.1.2.3.1 NLD System

The contents of RLD-VSL-00163 are transferred to the NLD system if they meet the discharge requirements for the receiving system. [3.5.3.2]

4.1.2.3.2 Tanker Trucks

The RLD system provides connections for transferring effluent to tanker trucks prior to hot commissioning. Connections are provided for clean effluents from RLD-VSL-00163, RLD-VSL-00164 and RLD-VSL-00165 during cold commissioning.

4.1.2.3.3 Vessel, Pit, and Cell Ventilation

Portions of the Lab's cascading airflow stream are directed to the equipment pits and effluent cells to provide ventilation, airborne contamination control, and heat removal. The airflow paths within the C2, C3, and C5 RLD subsystems are shown in Figure 4-1. Inflow for the vessel vent lines is provided through the drainlines connected to the headers. Vent holes in the dip tubes within the vessels provide the connection for the air flow path between the drain headers and the vessel vent line. Not all drain headers provide air flow due to caps or loop seals in the drain lines.

Each vessel cell is vented directly to its respective HVAC system. In the case of the C2 vessel cell, inflow is by leakage around the cover plates or other gaps. A pipe then connects the C2 vessel cell to the C2V system. The C3 and C5 vessel cells each have an engineered inflow path where air passes through a HEPA filter located in a C2 room (RLD-HEPA-00018 for the C3 vessel cell) or a C2/C3 room (RLD-HEPA-00015 for the C5 vessel cell) and then through piping into the pump and piping pits, and then into the vessel cell. A separate pipe then connects the C3 and C5 vessel cells to the C3V and C5V systems, respectively. [3.4.3.2.3]

The in-bleed air to these areas flows through HEPA filter housings that were specified as part of the RLD System design, but are operationally associated with the building's HVAC systems. The housings are designed to permit ventilation system airflow while maintaining pit or cell boundary confinement in the event of a postulated spill or other accident event postulated by the Integrated Safety Management (ISM) process. The filters are of a rectangular-type design and arranged in a single-stage configuration. The HEPA filters are designed and acceptance tested to comply with the requirements of ASME AG-1 prior to installation. A pre-filter section is included in the housing to reduce dust loading on the HEPA filters and therefore extend their useful life. The housing features bag in/bag out capabilities to facilitate HEPA filter replacement.

4.1.2.3.4 Mechanical Handling Description

A permanently installed bridge crane will be used to support pump replacement and piping pit maintenance in the C5 pump maintenance area. Forklifts and other portable rigging will be used to support maintenance in the C2/C3 systems. No maintenance is anticipated in the C3/C5 vessel cells.

4.1.2.3.5 Electrical Description

Power for the pump motors will be provided by the Low Voltage Electrical (480/208/120 V) System (LVE) via non-safety, 480V AC motor control centers. Power for the instrumentation and controls will be provided by the plant Uninterruptible Power Electrical System (UPE).

4.1.2.4 Facility Wide Systems Interfacing with the Lab RLD System

The plant wide systems which interface with the Lab RLD system are discussed in this section.

4.1.2.4.1 Integrated Control Network

The integrated control network (ICN) provides the integrated control and monitoring of equipment in the RLD systems including operation of control valves and pumps.

4.1.2.4.2 Electrical Systems

Power for equipment and some instrumentation functions throughout the systems will be provided by the LVE system via non-safety, 480V AC motor control centers.

4.1.3 Physical Layout and Location

The three cells associated with the RLD System are shown in Table 4-3.

Table 4-3 Cells, Major Equipment, Elevation, and Sumps for RLD Vessels

Cell Name	Room No.	Vessel	Elevation
C2 Fire Water Vault (C2 cell)	A-B001	RLD-VSL-00163	-18' – 8 1/2"
C3 Effluent Vessel Cell (C3 cell)	A-B003	RLD-VSL-00164	-18' – 8 1/2"
C5 Effluent Vessel Cell (C5 cell)	A-B004	RLD-VSL-00165	-19' – 2"

The locations of the three main vessels and sumps in RLD are shown in Table 4-3. The pumps in RLD are located in platforms or cells above the respective vessels they service. The Laboratory Area Sink Drain Collection Vessel Pumps (RLD-PMP-00182A/B) are located in Cell A-B002. Cell A-B002 is located below grade, at elevation -6' – 8 ½" directly above Cell A-B003 where vessel RLD-VSL-00164 is located. The Hot Cell

Drain Collection Vessel Pumps (RLD-PMP-00183A/B) are located in Cells A-B005 and A-B007. Both Cells A-B005 and A-B007 are located below grade, at elevation -6' – 7" directly above Cell A-B004 where vessel RLD-VSL-00165 is located. The Floor Drain Collection Vessel Pumps (RLD-PMP-00190A/B) are located on a platform in Cell A-B001. The platform is located below grade, at elevation -8' – 8" directly above vessel RLD-VSL-00163.

4.1.4 Principles of Operation

The Lab RLD system collects liquid effluents from throughout the Lab and provides interim storage before transfer to other facilities. The Lab RLD system is divided into three subsystems (C2, C3, and C5) according to the radiological classification of the areas within the Laboratory they serve. Each subsystem includes a collection drain piping network, a collection vessel, a pair of transfer pumps, and sumps for leak detection.

The RLD C2 subsystem collects liquid effluents from the C2 areas of the analytical Laboratories. It is comprised of a floor drain piping network, the floor drain collection vessel (RLD-VSL-00163), and two 100% capacity pumps (RLD-PMP-00190A/B). Vessel RLD-VSL-00163 is located in a cell (Room A-B001) underneath the C2/C3 filter/fan room (Room A-0160) in the Lab and receives effluent from the C2 areas of the Lab, including fire water. Two 100% capacity pumps (RLD-PMP-00190A/B) are installed to recirculate the contents of vessel RLD-VSL-00163 for agitation and sampling purposes, and to transfer the vessel contents. Sampling capability for RLD-VSL-00163 is provided by a sample station off the discharge of the recirculation line. During routine operations, the C2 liquid effluent is transferred to the NLD storage tank in BOF (NLD-TK-00001), but if it is not acceptable at the BOF it can be transferred to the Laboratory area sink drain collection vessel (RLD-VSL-00164) or the hotcell drain collection vessel (RLD-VSL-00165). The pumps are also used to empty the contents of the sump (RLD-SUMP-00040) in the non-routine event that the sump fills with fluid. Vessel RLD-VSL-00163 is vented to the C2 ventilation system.

The RLD C3 Subsystem collects effluent from the Radiological Laboratories including the cupsinks within the fume hoods. It consists of a drain line network, the Laboratory area sink drain collection vessel (RLD-VSL-00164), and pumps RLD-PMP-00164. The pumps discharge the contents of RLD-VSL-00164 to RLD-VSL-00165 during routine operations, recirculate the contents of RLD-VSL-00164, or empty the sump (RLD-SUMP-00045) located within the pump pit. During routine operations, the C3 liquid effluent is transferred to the hotcell drain collection vessel (RLD-VSL-00165). The space to accommodate an alternate destination of the C3 effluent is available. This possible future connection would require the installation of a new spool piece within the C5 piping pit (Room A-B006) to allow the transfer to bypass RLD-VSL-00165 and be routed directly to the PTF plant wash vessel (PWD-VSL-00044). Vessel RLD-VSL-00164 is vented to the C5V system.

The RLD C5 subsystem collects effluent from the hot cells, glove boxes, and other equipment associated with the hot cells. The subsystem includes drain headers, vessel RLD-VSL-00165, and transfer pumps RLD-PMP-00183A/B. The hot cell drain collection vessel pumps (RLD-PMP-00183A/B) are installed to discharge the contents of vessel RLD-VSL-00165 during routine operations, recirculate the contents of vessel RLD-VSL-00165, and to discharge the contents of sump RLD-SUMP-00042 in the off-normal event that the sump fills with fluid. During routine operations, the C5 liquid effluent is transferred to the PT Facility plant wash vessel (PWD-VSL-00044). Vessel RLD-VSL-00165 is vented to the C5 ventilation system.

4.1.5 System Reliability Features

RESERVED

4.1.6 System Control Features

This section describes the instrumentation and controls for the Lab RLD system.

4.1.6.1 System Monitoring

4.1.6.2 Control Capability and Locations

The discrete controls are listed in Table 4-4.

Table 4-4 Discrete (On/Off) Control for Lab RLD System

Equipment No.	Instrument No.	SAI	Function (CSR)	Remarks
RLD-VSL-00164	RLD-YC-6216	-	Opens & Closes RLD-YV-6216, Demineralized Water Inlet Valve	
	RLD-YC-6220	-	Opens & Closes RLD-YV-6220, Demineralized Water Valve	
	RLD-YC-6210	-	Opens & Closes valve RLD-YV-6210	
RLD-VSL-00165	RLD-YC-6114	-	Opens & Closes valve RLD-YV-6114	
	RLD-YC-6130	-	Opens & Closes valve RLD-YV-6130	
	RLD-YC-6113	-	Opens & Closes valve RLD-YV-6113	
	RLD-YC-6131	-	Opens & Closes valve RLD-YV-6131	
RLD-PMP-00182A/B	RLD-YC-6102	-	Opens & Closes RLD-YV-6102, RLD-VSL-00164 Outlet Valve From C3 Drains RLD-PMP-00182A/B	
RLD-PMP-00182A	RLD-YC-6203	-	Starts & Stops pump RLD-PMP-00182A	
RLD-PMP-00182B	RLD-YC-6206	-	Starts & Stops pump RLD-PMP-00182B	
RLD-PMP-00183A	RLD-YC-6105	-	Starts & Stops pump RLD-PMP-00183A	
RLD-PMP-00183B	RLD-YC-6108	-	Starts & Stops pump RLD-PMP-00183B	
RLD-PMP-00190A/B	RLD-YC-6511	-	Opens & Closes RLD-YV-6511, RLD-VSL-00163 Outlet Valve From C3 Drains RLD-PMP-00190A/B	
RLD-PMP-00190A	RLD-YC-6503	-	Starts & Stops pump RLD-PMP-00190A	
RLD-PMP-00190B	RLD-YC-6508	-	Starts & Stops pump RLD-PMP-00190B	
	RLD-YC-6802	-	Opens & Closes RLD-YV-6802, Demineralized Water Inlet Valve	

4.1.6.3 Automatic and Manual Actions

The process control loops and remote indications are listed in Table 4-5.

Table 4-5 Process Control Loops and Remote Process Indications for Lab RLD System

Equipment No.	Instrument No.	SAI	Function (CSR)	Remarks
RLD-VSL-00163	RLD-LI-6501	-	RLD-VSL-00163 Level (RLD-LT-6501) (inches)	
	RLD-LI-6501A	-	RLD-VSL-00163 Level (RLD-LT-6501) (gallons)	
RLD-VSL-00164	RLD-LI-6202	-	RLD-VSL-00164 Level (RLD-LT-6202) (inches)	
	RLD-LI-6202A	-	RLD-VSL-00164 Level (RLD-LT-6202) (gallons)	
RLD-VSL-00165	RLD-LI-6104	-	RLD-VSL-00165 Level (RLD-LT-6104) (inches)	
	RLD-LI-6104A	-	RLD-VSL-00165 Level (RLD-LT-6104) (gallons)	
RLD-SUMP-00040	RLD-LI-6506	-	RLD-SUMP-00040 Level (RLD-LT-6506)	
RLD-SUMP-00041	RLD-LI-6211	-	RLD-SUMP-00041 Level (RLD-LT-6211) (inches)	
	RLD-LKY-6211	-	RLD-SUMP-00041 Sump Leak Rate	
RLD-SUMP-00042	RLD-LI-6115	-	RLD-SUMP-00042 Level (RLD-LT-6115) (inches)	
	RLD-LKY-6115	-	RLD-SUMP-00042 Sump Leak Rate	
RLD-SUMP-00043A	RLD-LI-6116	-	RLD-SUMP-00043A Level (RLD-LT-6116) (inches)	
	RLD-LKY-6116	-	RLD-SUMP-00043A Sump Leak Rate	
RLD-SUMP-00043B	RLD-LI-6124	-	RLD-SUMP-00043B Level (RLD-LT-6124) (inches)	
	RLD-LKY-6124	-	RLD-SUMP-00043B Sump Leak Rate	
RLD-SUMP-00044	RLD-LI-6123	-	RLD-SUMP-00044 Level (RLD-LT-6123) (inches)	
	RLD-LKY-6123	-	RLD-SUMP-00044 Sump Leak Rate	
RLD-SUMP-00045	RLD-LI-6212	-	RLD-SUMP-00045 Level (RLD-LT-6212) (inches)	
	RLD-LKY-6212	-	RLD-SUMP-00045 Sump Leak Rate	
RLD-HEPA-00015	RLD-PDI-6121	-	RLD-HEPA-00015 Filter Differential Pressure (RLD-PDT-6121)	
RLD-HEPA-00018	RLD-PDI-6201	-	RLD-HEPA-00018 Filter Differential Pressure (RLD-PDT-6201)	
RLD-PMP-00182A/B	RLD-PI-6204	-	RLD-PMP-00182A/B Suction Pressure (RLD-PT-6204)	

Table 4-5 Process Control Loops and Remote Process Indications for Lab RLD System

Equipment No.	Instrument No.	SAI	Function (CSR)	Remarks
	RLD-TI-6213	-	RLD-PMP-00182A/B Discharge Temperature (RLD-TT-6213)	
	RLD-FI-6214	-	RLD-PMP-00182A/B Discharge Flow (RLD-FT-6214)	
RLD-PMP-00182A	RLD-PI-6207	-	RLD-PMP-00182A Discharge Pressure (RLD-PT-6207)	
RLD-PMP-00182B	RLD-PI-6219	-	RLD-PMP-00182B Discharge Pressure (RLD-PT-6219)	
RLD-PMP-00183A	RLD-TI-6112	-	RLD-PMP-00183A Discharge Temperature (RLD-TT-6112)	
	RLD-PI-6109	-	RLD-PMP-00183A Discharge Pressure (RLD-PT-6109)	
	RLD-PI-6106	-	RLD-PMP-00183A Suction Pressure (RLD-PT-6106)	
RLD-PMP-00183B	RLD-TI-6129	-	RLD-PMP-00183B Discharge Temperature (RLD-TT-6129)	
	RLD-PI-6127	-	RLD-PMP-00183B Discharge Pressure (RLD-PT-6127)	
	RLD-PI-6128	-	RLD-PMP-00183B Suction Pressure (RLD-PT-6128)	
RLD-PMP-00190A/B	RLD-PI-6507	-	RLD-PMP-00190A/B Suction Pressure (RLD-PT-6507)	
	RLD-TI-6510	-	RLD-PMP-00190A/B Temperature (RLD-TT-6510)	
RLD-PMP-00190A	RLD-PI-6504	-	RLD-PMP-00190A Discharge Pressure (RLD-PT-6504)	
RLD-PMP-00190B	RLD-PI-6509	-	RLD-PMP-00190B Discharge Pressure (RLD-PT-6509)	

4.1.6.4 Setpoints and Ranges

The trips, alarms, and interlocks are listed in Table 4-6. Alarm set points and process trips will be identified in a Configuration Data Index (CDI) (24590-LAB-JDX-RLD-00001 Future) which will be provided by C&I at a later date.

Table 4-6 Trips, Alarms, and Interlocks for Lab RLD System

Equipment No.	Instrument No.	SAI	Function (CSR)	Remarks
RLD-VSL-00163	RLD-LI-6501A	-	• RLD-VSL-00163 Level High Alarm • RLD-VSL-00163 Level Low Alarm	
RLD-VSL-00164	RLD-LI-6202A	-	• RLD-VSL-00164 Level High Alarm • RLD-VSL-00164 Level Low Alarm	

Table 4-6 Trips, Alarms, and Interlocks for Lab RLD System

Equipment No.	Instrument No.	SAI	Function (CSR)	Remarks
	RLD-LSHH-6202A	-	• RLD-VSL-00164 Level High High Alarm • Override Closes valve RLD-YV-6216 • Override Closes valve RLD-YV-6210	
RLD-VSL-00165	RLD-LI-6104A	-	• RLD-VSL-00165 Level High Alarm • RLD-VSL-00165 Level Low Alarm	
	RLD-LSHH-6104A	-	• RLD-VSL-00165 Level High High Alarm • Override Closes valve RLD-YV-6511 • Override Closes valve RLD-YV-6102 • Override Closes valve RLD-YV-6802	
RLD-SUMP-00040	RLD-LI-6506	-	RLD-SUMP-00040 Level High Alarm	
RLD-SUMP-00041	RLD-LI-6211	-	RLD-SUMP-00041 Level High Alarm	
	RLD-LKY-6211	-	RLD-SUMP-00041 Sump Leak Rate High Alarm	
RLD-SUMP-00042	RLD-LI-6115	-	RLD-SUMP-00042 Level High Alarm	
	RLD-LKY-6115	-	RLD-SUMP-00042 Sump Leak Rate High Alarm	
RLD-SUMP-00043A	RLD-LI-6116	-	RLD-SUMP-00043A Level High Alarm	
	RLD-LKY-6116	-	RLD-SUMP-00043A Sump Leak Rate High Alarm	
RLD-SUMP-00043B	RLD-LI-6124	-	RLD-SUMP-00043B Level High Alarm	
	RLD-LKY-6124	-	RLD-SUMP-00043B Sump Leak Rate High Alarm	
RLD-SUMP-00044	RLD-LI-6123	-	RLD-SUMP-00044 Level High Alarm	
	RLD-LKY-6123	-	RLD-SUMP-00044 Sump Leak Rate High Alarm	
RLD-SUMP-00045	RLD-LI-6212	-	RLD-SUMP-00045 Level High Alarm	
	RLD-LKY-6212	-	RLD-SUMP-00045 Sump Leak Rate High Alarm	
RLD-PMP-00182A	RLD-PI-6207	-	RLD-PMP-00182A Discharge Pressure Low Alarm when pump Running	
	RLD-PSHH-6207	-	• RLD-PMP-00182A Discharge Pressure High High Alarm • Override Stops pump RLD-PMP-00182A	
	RLD-PSLL-6207	-	• RLD-PMP-00182A Discharge Pressure Low Low Alarm when pump Running • Override Stops pump RLD-PMP-00182A when pump Running	
RLD-PMP-00182B	RLD-PI-6219	-	RLD-PMP-00182B Discharge Pressure Low Alarm when pump Running	

Table 4-6 Trips, Alarms, and Interlocks for Lab RLD System

Equipment No.	Instrument No.	SAI	Function (CSR)	Remarks
	RLD-PSHH-6219	-	• RLD-PMP-00182B Discharge Pressure High High Alarm • Override Stops pump RLD-PMP-00182B	
	RLD-PSLL-6219	-	• RLD-PMP-00182B Discharge Pressure Low Low Alarm when pump Running • Override Stops pump RLD-PMP-00182B when pump Running	
RLD-PMP-00182A/B	RLD-PMP-00182A_RNG and RLD-PMP-00182B_RNG	-	• Override Closes RLD-YV-6210 when neither pump Running • Override Closes RLD-YV-6102 when neither pump Running	
RLD-PMP-00183A	RLD-PI-6109	-	RLD-PMP-00183A Discharge Pressure Low Alarm when pump Running	
	RLD-PSHH-6109	-	• RLD-PMP-00183A Discharge Pressure High High Alarm • Override Stops pump RLD-PMP-00183A	
	RLD-PSLL-6109	-	• RLD-PMP-00183A Discharge Pressure Low Low Alarm when pump Running • Override Stops pump RLD-PMP-00183A when pump Running	
	RLD-PMP-00183A_RNG	-	• Override Closes RLD-YV-6113 when pump Not Running • Override Closes RLD-YV-6114 when pump Not Running	
RLD-PMP-00183B	RLD-PI-6127	-	RLD-PMP-00183B Discharge Pressure Low Alarm when pump Running	
	RLD-PSHH-6127	-	• RLD-PMP-00183B Discharge Pressure High High Alarm • Override Stops pump RLD-PMP-00183B	
	RLD-PSLL-6127	-	• RLD-PMP-00183B Discharge Pressure Low Low Alarm when pump Running • Override Stops pump RLD-PMP-00183B	
	RLD-PMP-00183B_RNG	-	• Override Closes RLD-YV-6130 when pump Not Running • Override Closes RLD-YV-6131 when pump Not Running	
RLD-PMP-00190A	RLD-PI-6504	-	RLD-PMP-00190A Discharge Pressure Low Alarm when pump Running	

Table 4-6 Trips, Alarms, and Interlocks for Lab RLD System

Equipment No.	Instrument No.	SAI	Function (CSR)	Remarks
	RLD-PSHH-6504	-	• RLD-PMP-00190A Discharge Pressure High High Alarm • Override Stops pump RLD-PMP-00190A	
	RLD-PSLL-6504	-	• RLD-PMP-00190A Discharge Pressure Low Low Alarm when pump Running • Override Stops pump RLD-PMP-00190A when pump Running	
RLD-PMP-00190B	RLD-PSHH-6509	-	• RLD-PMP-00190B Discharge Pressure High High Alarm • Override Stops pump RLD-PMP-00190B	
	RLD-PI-6509	-	RLD-PMP-00190B Discharge Pressure Low Alarm when pump Running	
	RLD-PSLL-6509	-	• RLD-PMP-00190B Discharge Pressure Low Low Alarm when pump Running • Override Stops pump RLD-PMP-00190B when pump Running	
RLD-PMP-00190A/B	RLD-PMP-00190A_RNG and RLD-PMP-00190B_RNG	-	Override Closes RLD-YV_6511 when neither pump is Running	
RLD-LDB-00002	RLD-LSH-6120	-	RLD-LDB-00002 Leak Detection Box Level High Alarm	
RLD-LDB-00004	RLD-LSH-6118	-	RLD-LDB-00004 Leak Detection Box Level High Alarm	
RLD-LDB-00005	RLD-LSH-6215	-	RLD-LDB-00005 Leak Detection Box Level High Alarm	
RLD-LDB-00006	RLD-LSH-6701	-	RLD-LDB-00006 Leak Detection Box Level High Alarm	
RLD-LDB-00007	RLD-LSH-6702	-	RLD-LDB-00007 Leak Detection Box Level High Alarm	
RLD-LDB-00008	RLD-LSH-6703	-	RLD-LDB-00008 Leak Detection Box Level High Alarm	
RLD-LDB-00009	RLD-LSH-6801	-	RLD-LDB-00009 Leak Detection Box Level High Alarm	
RLD-LDB-00011	RLD-LSH-6704	-	RLD-LDB-00011 Leak Detection Box Level High Alarm	
PWD-VSL-00044	PWD-LSHH-0202	-	Override Closes RLD-YV-6802 Override Closes RLD-YV-6113 Override Closes RLD-YV-6131	
Building 60 Distribution Header	DIW-FQSH-6101	-	Override Closes RLD-YV-6802 Override Closes RLD-YV-6216	

Table 4-6 Trips, Alarms, and Interlocks for Lab RLD System

Equipment No.	Instrument No.	SAI	Function (CSR)	Remarks
RLD-VSL-00164	RLD-YC-6802_OP	-	Override Closes RLD-YV-6216	
	RLD-YC-6216_OP	-	Override Closes RLD-YV-6802	

4.1.6.5 Interlocks, Bypasses, and Permissives

4.2 Operations

4.2.1 Initial Configuration (Pre-startup)

RESERVED

4.2.2 System Startup

RESERVED

4.2.3 Normal Operations

RESERVED

4.2.4 Off-Normal Operations

RESERVED

4.2.5 System Shutdown

RESERVED

4.2.6 Safety Management Programs and Administrative Controls

RESERVED

4.3 Testing and Maintenance

RESERVED

4.3.1 Temporary Configurations

RESERVED

4.3.2 TSR-Required Surveillances

RESERVED

4.3.3 Non-TSR Inspections and Testing

RESERVED

4.3.4 Maintenance

RESERVED

4.4 Supplemental Information

RESERVED

5 References and Design Documents List

5.1 Source/Basis References

Document Number	Rev	Title	Text Reference
24590-WTP-DB-ENG-01-001	2	Basis of Design	BOD
24590-WTP-ICD-MG-01-006	6	Interface Control Document for Radioactive Dangerous Liquid Effluents	ICD-06
24590-WTP-PSAR-ESH-01-002-06	4e	Preliminary Documented Safety Analysis to Support Construction Authorization; Lab Facility Specific Information	PDSA - Lab Facility
24590-WTP-RPT-OP-01-001	5	Operations Requirements Document	ORD
24590-WTP-SRD-ESH-01-001-02	7f	Safety Requirements Document, Volume II	SRD
DE-AC27-01RV14136	N/A	DOE/BNI WTP Contract Mod No. 304, Section C - Statement of Work	WTP Contract
WAC 173-303-640	N/A	Tank Systems	WAC

5.2 Other References

Document Number	Rev	Title
24590-LAB-M6C-RLD-00001	0	Overflow Sizing for Lab RLD Vessels
24590-LAB-PER-M-04-0001	0	Lab Minimum Leak Rate Detection Capabilities for Leak Detection Boxes, Cell Sumps, and Pit Sumps
24590-LAB-PER-M-04-0002	0	Lab Waste Removal Capability for the Effluent Vessel Cells
24590-LAB-RPT-ENS-12-001	0	Lab Post Accident Monitoring Report
24590-LAB-RPT-ENV-09-001	1	Dangerous Waste Permit Secondary Containment Requirements for LAB
24590-WTP-3DP-G04B-00046	31	Engineering Drawings
24590-WTP-3DP-G04B-00093	6	System and Facility Design Descriptions
24590-WTP-DB-PET-09-001	1	Process Inputs Basis of Design
24590-WTP-GPG-ENG-0161	0	Technical Requirements Management
24590-WTP-GPG-M-027	5	Recommended Slopes for Piping Systems
24590-WTP-GPG-M-032	3B	Vessel Overflow and Gravity Line Sizing (Design Guide)
24590-WTP-M6-50-00008	3	P&ID Symbols and Legend (Sheet 8 of 8)
24590-WTP-PL-RACT-RT-0001	0	WTP Remotability Verification Plan
24590-WTP-PSAR-ESH-01-002-01	5e	Preliminary Documented Safety Analysis to Support Construction Authorization; General Information
24590-WTP-RPT-ENG-01-001	6D	Technical Baseline Description
DOE-STD-1020-94	N/A	Natural Phenomena Hazards Design and Evaluation Criteria for Department of Energy Facilities

5.3 System Design Documents

Document Number	Title
General Arrangements - Analytical Laboratory	
24590-LAB-P1-60-00007	Analytical Laboratory General Arrangement Plan At El (-) 19'-2" Sections E-E, F-F & G-G
24590-LAB-P1-60-00008	Analytical Laboratory General Arrangement Plan At El 0'-0"
24590-LAB-P1-60-00009	Analytical Laboratory General Arrangement Plan At El 17'-0"
24590-LAB-P1-60-00010	Analytical Laboratory General Arrangement Sections A-A, B-B, C-C, & D-D
24590-LAB-P1-60-00011	Analytical Laboratory General Arrangement Plan At Roof
24590-LAB-P1-60-00012	Analytical Laboratory General Arrangement Partial Plan At El 0'-0"
Equipment Location Plans - Analytical Laboratory	
24590-LAB-P1-P23T-00001	Analytical Laboratory Equipment Location Index Key Plan
24590-LAB-P1-P23T-00002	Analytical Laboratory Equipment Location Plan El (-) 19' - 2" / Area 3
24590-LAB-P1-P23T-00101	Analytical Laboratory Equipment Location Plan At El 0'-0"/Area 1
24590-LAB-P1-P23T-00102	Analytical Laboratory Equipment Location Plan At El 0'-0"/Area 2
24590-LAB-P1-P23T-00103	Analytical Laboratory Equipment Location Plan At El 0'-0"/Area 3
24590-LAB-P1-P23T-00104	Analytical Laboratory Equipment Location Plan At El 0'-0"/Area 4
24590-LAB-P1-P23T-00105	Analytical Laboratory Equipment Location Plan At El 0'-0"/Area 5
24590-LAB-P1-P23T-00106	Analytical Laboratory Equipment Location Plan At El 0'-0"/Area 6
24590-LAB-P1-P23T-00107	Analytical Laboratory Equipment Location Plan At El 0'-0"/Area 7
24590-LAB-P1-P23T-00108	Analytical Laboratory Equipment Location Plan At El 0'-0"/Area 8
Process Flow Diagrams - Analytical Laboratory	
24590-LAB-M5-V17T-00029	WTP Analytical Laboratory Process Flow Diagram Radioactive Liquid Disposal
P&IDs – Symbols and Legend	
24590-WTP-M6-50-00001	P&ID Symbols And Legend Sheet 1 Of 8
24590-WTP-M6-50-00002	P&ID Symbols And Legend Sheet 2 Of 8
24590-WTP-M6-50-00003	P&ID Symbols And Legend Sheet 3 Of 8
24590-WTP-M6-50-00004	P&ID Symbols And Legend Sheet 4 Of 8
24590-WTP-M6-50-00005	P&ID Symbols And Legend Sheet 5 Of 8
24590-WTP-M6-50-00006	P&ID Symbols And Legend Sheet 6 Of 8
24590-WTP-M6-50-00007	P&ID Symbols And Legend Sheet 7 Of 8
24590-WTP-M6-50-00008	P&ID Symbols And Legend Sheet 8 Of 8
P&IDs - Analytical Laboratory	
24590-LAB-M6-CHW-00001001	P&ID-Lab Chilled Water System Distribution
24590-LAB-M6-DIW-00001001	P&ID - Lab Demineralized Water System

Document Number	Title
24590-LAB-M6-DOW-00001001	P&ID - Lab Domestic (Potable) Water System Distribution
24590-LAB-M6-DOW-00002001	P&ID - Lab Domestic (Potable) Water System Rad Lab Area Distribution
24590-LAB-M6-DOW-00002002	P&ID - Lab Domestic (Potable) Water System Rad Lab Area Distribution
24590-LAB-M6-DOW-00003001	P&ID - Lab Domestic (Potable) Water System Peripheral Area Distribution
24590-LAB-M6-DOW-00003002	P&ID - Lab Domestic (Potable) Water System Peripheral Area Distribution
24590-LAB-M6-DOW-00003003	P&ID - Lab Domestic (Potable) Water System Peripheral Area Distribution
24590-LAB-M6-PVA-00001001	P&ID - Lab Process Vacuum Air System
P&IDs - Analytical Laboratory RLD System	
24590-LAB-M6-RLD-00001001	P&ID - Lab Radioactive Liquid Waste Disposal System C5 Collection and Transfer RLD-VSL-00165
24590-LAB-M6-RLD-00001002	P&ID - Lab Radioactive Liquid Waste Disposal System C5 Collection and Transfer RLD-PMP-00183A
24590-LAB-M6-RLD-00001003	P&ID - Lab Radioactive Liquid Waste Disposal System C5 Collection and Transfer RLD-PMP-00183B
24590-LAB-M6-RLD-00001004	P&ID - Lab Radioactive Liquid Waste Disposal System C5 Collection and Transfer Valve Pit
24590-LAB-M6-RLD-00002001	P&ID - Lab Radioactive Liquid Waste Disposal System C3 Collection and Transfer RLD-VSL-00164
24590-LAB-M6-RLD-00002002	P&ID - Lab Radioactive Liquid Waste Disposal System C3 Collection and Transfer
24590-LAB-M6-RLD-00002003	P&ID - Lab Radioactive Liquid Waste Disposal System C3 Collection and Transfer RLD-PMP-00182A/B
24590-LAB-M6-RLD-00003001	P&ID - Lab Radioactive Liquid Waste Disposal System C2 Drain Collection
24590-LAB-M6-RLD-00004001	P&ID - Lab Radioactive Liquid Waste Disposal System C2 Drain Collection
24590-LAB-M6-RLD-00004002	P&ID - Lab Radioactive Liquid Waste Disposal System C2 Drain Collection
24590-LAB-M6-RLD-00004003	P&ID - Lab Radioactive Liquid Waste Disposal System C2 Drain Collection
24590-LAB-M6-RLD-00005001	P&ID - Lab Radioactive Liquid Waste Disposal System C2 Collection and Transfer RLD-VSL-00163
24590-LAB-M6-RLD-00005002	P&ID - Lab Radioactive Liquid Waste Disposal System C2 Collection and Transfer RLD-PMP-00190A/B
24590-LAB-M6-RLD-00006001	P&ID - Lab Radioactive Liquid Waste Disposal System C3 Rad Lab Collection
24590-LAB-M6-RLD-00006002	P&ID - Lab Radioactive Liquid Waste Disposal System C3 Rad Lab Collection
24590-LAB-M6-RLD-00006003	P&ID - Lab Radioactive Liquid Waste Disposal System C3 Rad Lab Collection
24590-LAB-M6-RLD-00007001	P&ID - Lab Radioactive Liquid Waste Disposal System C3 Leak Detection Boxes
24590-LAB-M6-RLD-00007002	P&ID - Lab Radioactive Liquid Waste Disposal System C3 Collection Drain Header
24590-LAB-M6-RLD-00008001	P&ID - Lab Radioactive Liquid Waste Disposal System C5 Leak Detection Boxes
24590-LAB-M6-RLD-00008002	P&ID - Lab Radioactive Liquid Waste Disposal System C5 Drain Collection Headers
24590-LAB-M6-RLD-00008003	P&ID - Lab Radioactive Liquid Waste Disposal System C5 Transfer Lines
P&IDs – Interface Systems and facilities	
24590-BOF-M6-NLD-00002001	P&ID - BOF Non-Radioactive Liquid Waste Disposal System NLD-TK-00001

Document Number	Title
24590-PTF-M6-PWD-00058	P&ID-PTF Plant Wash & Disposal System Underground Transfer Lines
Process data Inputs	
24590-LAB-MVC-RLD-00001	Process Data for Floor Drain Collection Vessel (RLD-VSL-00163)
24590-LAB-MVC-RLD-00002	Process and Materials Selection Data for Laboratory Area Sink Drain Collection Vessel (RLD-VSL-00164)
24590-LAB-MVC-RLD-00003	Process and Materials Selection Data for Hotcell Drain Collection Vessel (RLD-VSL-00165)
24590-LAB-MVC-RLD-00004	Seismic per UBC-97
24590-LAB-MVC-RLD-00005	RLD-VSL-00165 Nozzle Neck Evaluation per Asme Section VIII, DIV-2, Appendix-4-138
Equipment Assembly – Analytical Laboratory Area	
24590-LAB-MV-RLD-00001	Equipment Assembly Lab Area Sink Drain Collection Vessel RLD-VSL-00164
24590-LAB-MV-RLD-00003	Equipment Assembly Analytical Lab Hot Cell Drain Collection Vessel RLD-VSL-00165
24590-LAB-MV-RLD-00004	Equipment Assembly Floor Drain Collection Vessel RLD- VSL-00163
Calculations & Other Data	
24590-LAB-N1D-RLD-00001	Corrosion Evaluation – RLD-VSL-00163 (Lab) - Floor Drain Collection Vessel (RLD C2 Vessel)
24590-LAB-N1D-RLD-00002	Corrosion Evaluation – RLD-VSL-00164 (Lab) - Lab Area Sink Drain Collection Vessel (RLD C3 Vessel)
24590-LAB-N1D-RLD-00003	Corrosion Evaluation – RLD-VSL-00165 (Lab) Hotcell Drain Collection Vessel
24590-LAB-N1D-RLD-00004	Corrosion Evaluation – RLD-PMP-00182A/B (Lab) - Lab Area Sink Drain Collection Vessel Pump with Bowl Drain
24590-LAB-N1D-RLD-00005	Corrosion Evaluation – RLD-PMP-00183A-B Lab - Hotcell Drain Collect. Vessel Pump With Bowl Drain
24590-LAB-U0D-W16T-00001	Analytical Laboratory (Lab) Room Environment Data Sheet
24590-LAB-JDX-RLD-00001	Configuration Data Index for Lab Facility RLD System
24590-LAB-M6C-RLD-00001	Overflow Sizing for Lab RLD Vessels
24590-LAB-M6C-RLD-00003	Sizing of Lab Floor Drain Collection Vessel- RLD-VSL-00163
24590-LAB-M6C-RLD-00004	Sizing of Lab Hotcell Drain Collection Vessel - RLD-VSL-00164
24590-LAB-M6C-RLD-00005	Sizing of Lab Hotcell Drain Collection Vessel- RLD-VSL-00165
24590-LAB-M6C-RLD-00016	Dangerous Waste Permit (DWP) Liner Heights In The Lab Facility
24590-LAB-M6C-RLD-00017	Temperature Gradient Across Lab Area Sink Drain Collection Vessel RLD-VSL-00164
24590-LAB-M6C-RLD-00018	Temperature Gradient Across Lab Hotcell Drain Collection Vessel RLD-VSL-00165
24590-LAB-M6C-RLD-00021	Determine The Number of RLD C3 Floor Drains and the Drainline Size in the Analytical Laboratory
24590-LAB-M6C-RLD-00022	Lab RLD System Line Pressure and Temperature Conditions

Document Number	Title
24590-LAB-M6C-RLD-00023	Sizing of Wash Ring for Lab Area Sink Drain Collection Vessel RLD-VSL-00164
24590-LAB-M6C-RLD-00024	Sizing of Wash Ring for C5 Collection Vessel-RLD-VSL-00165
24590-LAB-M6C-RLD-00025	Lab RLD Sizing of Wash Rings for Cells and Pits
24590-LAB-M6C-RLD-00026	Determine The Number of RLD C2 Floor Drains and the Drain Line Size in the Analytical Laboratory
24590-LAB-M6C-RLD-00027	Lab Minimum Leak Rate, Detection Capabilities for Cell Sumps, Pit Sumps, and Leak Detection Boxes
24590-LAB-M6C-RLD-00029	RLD C5 and C3 Inbleed Filter and Duct Sizing
24590-LAB-M6C-RLD-00030	Lab Waste Removal Capability
24590-LAB-M6C-RLD-00040	C2 Transfer Pump and Associated Pipe Lines Sizing Calculation
24590-LAB-M6C-RLD-00041	Sizing of C3 Vessel Pumps RLD-PMP-00182A/B and Associated Piping
24590-LAB-M6C-RLD-00042	C5 Pumps and Associated Piping Sizing Calculation
24590-LAB-M6C-RLD-00043	Lab Pipe Line Sizing Calculation for RLD System
24590-LAB-MPD-RLD-00001	24590-LAB-RLD-PMP-00183A and B - Self-Priming, Mag-Drive, Horizontal Centrifugal Pump Providing 15 Feet of Suction Static Lift with NPS3, Sch. 40S, 45 Linear ft (max.) Suction Piping. Pump is to be Suitable for Pumping Radioactive Liquids Containing < 1%
24590-LAB-MPD-RLD-00002	24590-LAB-RLD-PMP-00182A and B - Self-Priming, Mag-Drive, Horizontal Centrifugal Pump Providing 15 Feet of Suction Static Lift with NPS 3, SCH. 40S, 45 LINEAR ft (max.) Suction Piping. Pump is to be Suitable for Pumping Radioactive Liquids Containing < 1%
24590-LAB-MPD-RLD-00003	24590-LAB-RLD-PMP-00190A AND B - Self-Priming Mag-Drive Horizontal Centrifugal Pump Providing 13 Feet of Suction Static Lift with NPS 2 Sch. 40S 35 Linear ft (max.) Suction Piping. Pump is to be Suitable for Pumping Clean Waste Water from Eyewash Emergency
24590-LAB-MVD-RLD-00163	24590-LAB-MV-RLD-VSL-00163 - Floor Drain Collection Vessel
24590-LAB-MVD-RLD-00164	24590-LAB-MV-RLD-VSL-00164 - Lab Area Sink Drain Collection Vessel (RLD C3 Vessel)
24590-LAB-MVD-RLD-00165	24590-LAB-MV-RLD-VSL-00165 - Hot Cell Drain Collection Vessel

Appendix A - Test Objectives, Conditions and Acceptance Criteria

NOTE: Demonstrations and tests identified in this appendix are preliminary, pending completion of design activities. They are established to document the flowdown of verification needs established in Section 3 but are not sufficiently detailed for development of specific system and equipment test plans. They may be used for general planning only. This note is to be removed when design is sufficiently progressed to provide the details needed to establish the basis for testing and acceptance criteria. **[HOLD]**

Requirement (para #)	Test (T) or Demo (D)	SU or COM	Plan (including SSCs)	Acceptance Criteria (TAC or GTC)*	Notes/Comments	Test Conditions
3.4.4.3.2	D	SU/COM	Demonstrate remotability in accordance with 24590-WTP-PL-RACT-RT-0001, WTP Remotability Verification Plan.	**(GTC)** Demonstrate that the remotely operated equipment can be operated remotely.		
3.4.4.4.5	D	SU/COM	Demonstrate the capability to flush the following Lab Facility RLD system piping: • Transfer lines between pumps RLD-PMP-00190A/B and all distribution points in Lab RLD system. • Transfer lines between pumps RLD-PMP-00182A/B and all distribution points in Lab RLD system. • Transfer lines between pumps RLD-PMP-00183A/B and all distribution points in Lab RLD system. • Recirc lines from pumps RLD-PMP-00190A/B, 00182A/B, and 00183A/B to vessels. • Suction lines to pumps RLD-PMP-00190A/B, 00182A/B, and 00183A/B from vessels and sumps. • Spray nozzles, and overflow lines associated with RLD vessels (RLD-VSL-00163, 00164, and 00165). RLD pumps – CTNs: RLD-PMP-00190A/-00190B, RLD-PMP-00182A/-00182B, RLD-PMP-00183A/-00183B. Vessels – CTNs: RLD-VSL-00163A, RLD-VSL-00164, RLD-VSL-00165.	**(GTC)** System demonstrates the capability to flush RLD system piping using water from the Lab Facility.		Simulant required DIW system is operating.
3.7.1.2	D	SU/COM	Perform a demonstration to verify that the RLD pumps are capable of transferring effluents to the prescribed destinations at the required rates.	**(TAC)** System demonstrates the capability to transfer effluents to the prescribed destinations at the required rates.		RLD pumps are operating. Simulant required

Requirement (para #)	Test (T) or Demo (D)	SU or COM	Plan (including SSCs)	Acceptance Criteria (TAC or GTC)*	Notes/Comments	Test Conditions
3.9.1.1.1	D	SU/COM	Demonstrate capability of the PCJ system to determine volume balance during transfers from vessel RLD-VSL-00163 to vessel RLD-VSL-00164, vessel RLD-VSL-00165, and tanker truck. Level Detection – CTNs: LT-6501, LT-6202, LT-6104.	**(GTC)** For each transfer from vessel RLD-VSL-00163 to RLD-VSL-00164, vessel RLD-VSL-00165, and tanker truck, volume balance is determined.		PCJ operating
3.9.1.1.1	D	SU/COM	Demonstrate capability of the PCJ system to determine volume balance during transfers from vessel RLD-VSL-00164 to vessel RLD-VSL-00165 and tanker truck. Level Detection – CTNs: LT-6202, LT-6104.	**(GTC)** For each transfer from vessel RLD-VSL-00164 to RLD-VSL-00165 and tanker truck, volume balance is determined.		PCJ operating
3.9.1.1.1	D	SU/COM	Demonstrate capability of the PCJ system to determine volume balance during transfers from vessel RLD-VSL-00165 to tanker truck. Level Detection – CTN: LT-6104.	**(GTC)** For each transfer from vessel RLD-VSL-00165 to tanker truck, volume balance is determined.		PCJ operating
3.9.1.1.2	D	SU/COM	Demonstrate the capability to remotely monitor vessel pressure and level. Demonstrate the capability of remotely monitoring pressure and measuring effluent level in the vessels. Vessel – CTNs: RLD-VSL-00163, RLD-VSL-00164, RLD-VSL-00165. Pressure transmitter – CTNs: RLD-PT-2163, RLD-PT-2169, RLD-PT-2247, RLD-PT-2159, RLD-PT-2160, RLD-PT-2242, RLD-PT-2256. Level transmitter – CTNs: RLD-LT-2130, RLD-LT-2131, RLD-LT-2142, RLD-LT-2143, RLD-LT-2205, RLD-LT-2206.	**(GTC)** The pressure and level elements are monitored and displayed on the PCJ.		PCJ operating Simulate vessel pressure Vessel level detection operating

Requirement (para #)	Test (T) or Demo (D)	SU or COM	Plan (including SSCs)	Acceptance Criteria (TAC or GTC)*	Notes/Comments	Test Conditions
3.9.1.2.1	D	SU/COM	Demonstrate the capability of the Lab Facility RLD system to remotely monitor liquid level in the RLD sumps and display them in the PCJ system. Sump – CTNs: RLD-SUMP-00040, RLD-SUMP-00041, RLD-SUMP-00042, RLD-SUMP-00043A, RLD-SUMP-00043B, RLD-SUMP-00044, RLD-SUMP-00045. Level detector – CTNs: RLD-LT-2233, RLD-LT-2301, RLD-LT-2302, RLD-LT-2303, RLD-LT-2304, RLD-LT-2307, RLD-LT-2308, RLD-LT-2319.	**(GTC)** The liquid level in the sumps are monitored and displayed on the PCJ.		Water is the test fluid. PCJ operating

***Note:** Test acceptance criteria (TAC) are based on requirements from authorization basis documents. General test criteria (GTC) are requirements from other sources.

Appendix B - Description of System Functional Flow and Interactions

Function: A.1	Collect Floor Drain Effluents

Detail description: Non-radioactive floor drain effluents are collected from the following C2 classified drain areas:

- Lab Corridors
- C2 Hotcell Corridor
- Sample Receive/Ship Area
- Janitor Closet Sink & Floor
- Eyewash & Safety Shower
- C2/C3 Filter/Fan Room
- C2 Maintenance Shop
- ASX Vacuum Pump Room
- C2V/C3V/C5V Condensate
- C5 Filter/Fan Room
- HP Personnel Decontamination Room
- Waste Drum Management Floor
- Clean Drum Export Floor
- Fire water discharge in these areas, in the case of fire

All floor drain effluents are piped and gravity drained to the non-radioactive process drain headers.

Initiation: This function initiates when the Lab Facility is in startup operations.

Termination: None.

Parallel or sequential functions:

- A.2 - Effluents are gravity drained (free-drained) via multiple headers to vessel RLD-VSL-00163.
- B.1 - Headspace is maintained in receiving vessel RLD-VSL-00163.
- C2V Lab Ventilation System keeps negative pressure in RLD-VSL-00163 to promote airflow from process drains, via process drain headers, to receiving vessel.

Applicable Modes: All.

Function: A.2	Transfer Floor Drain Effluents
Detail description: Non-Radioactive Floor Drain Effluents are gravity drained (free-drained) in headers from the floor drains to vessel RLD-VSL-00163.	
Initiation: This function initiates when the Lab Facility is in startup operations and liquid effluents are present in the drain piping/headers.	
Termination: When liquid effluents are not present in the drain piping/headers.	
Parallel or sequential functions: • A.1 - Floor drain effluents are gravity drained to process drain headers. • B.1 - Headspace is maintained in receiving vessel RLD-VSL-00163. • C2V Lab Ventilation System keeps negative pressure in RLD-VSL-00163 to promote airflow from condensate drains, via process drain headers, to receiving vessel.	
Applicable Modes: All.	

Function: A.3	Receive Effluents and Liquids
Detail description: Vessel RLD-VSL-00163 receives the following non-radioactive effluents and liquids: • Non-radioactive effluents and fluids from drains throughout the Analytical Laboratory. These fluids include all collected fluids from Function A.1. • DIW water from routine vessel wash and line flushes. • Decontamination chemicals added to wash water. • Sump transfer liquids from RLD-SUMP-00040.	
Initiation: This function initiates when the Lab Facility is in startup operations.	
Termination: None.	
Parallel or sequential functions: • A.5 - Vessel inventory is mixed on operator command. • B.1 - Vessel headspace must be maintained to accommodate incoming fluids. • B.2 - Vessel overflow must be provided to maintain vessel headspace and accommodate incoming fluids. • C2V Lab Ventilation System keeps negative pressure in RLD-VSL-00163 to promote airflow from condensate drains, via process drain headers, to receiving vessel.	
Applicable Modes: All.	

Function: A.4	Store Effluents
Detail description: Effluents received in vessel RLD-VSL-00163 are temporarily stored until the inventory is sufficient to warrant transfer to the NLD tank in BOF.	
Initiation: This function initiates when the Lab Facility is in startup operations and when effluent has been received.	
Termination: None. After initiation, a liquid heel is maintained in the vessel.	
Parallel or sequential functions: • A.5 - Vessel inventory is mixed on operator command. • Grab samples can be taken while mixing inventory - from the recirculation line discharge.	
Applicable Modes: All.	

Function: A.5	Mix Vessel Inventory
Detail description: Mixing of the vessel inventory is performed to suspend insoluble solids and to blend liquids. Transfer pumps RLD-PMP-00190A/B mix the inventory fluids by drawing suction from the vessel and returning the inventory via the recirculation line.	
Initiation: Operator initiated.	
Termination: Operator terminated.	
Parallel or sequential functions: Grab samples can be taken on operator request while mixing inventory - from the recirculation line discharge.	
Applicable Modes: Routine operations.	

Function: A.6	Sample Vessel Inventory
Detail description: While the vessel inventory is being mixed/recirculated, grab samples may be taken from the discharge of the recirculation line. Sampling of each batch is not required, and is not a process "hold" point for analytical results.	
Initiation: Operator initiated.	
Termination: Operator terminated.	
Parallel or sequential functions: Vessel inventory must be in recirculation mode to take grab sample.	
Applicable Modes: Routine operations.	

Function: A.7	Transfer Vessel Inventory
Detail description: Mixed effluent may be batch transferred by operator command as follows: • to the NLD tank in BOF for processing – if approved by NLD. • to tanker truck during startup and cold commissioning. • to vessel RLD-VSL-00164. • to vessel RLD-VSL-00165 (after the PT Facility is brought on line).	
Initiation: This function is operator initiated.	
Termination: This function terminates when the approved batch volume has been transferred from the RLD transfer vessel to the recipient vessel. Termination is by level stop signal or operator stop action.	
Parallel or sequential functions: None.	
Applicable Modes: Routine operations.	

Function: B.1	Vent Vessel Headspace
Detail description: Vessel RLD-VSL-00163 must be able to receive the drain effluents from A.2 continuously. Maintaining a minimum headspace provides an air gap entry for all drain effluents introduced above the vessel overflow level – thus avoiding airlocks.	
Initiation: None.	
Termination: None.	
Parallel or sequential functions: • A.3 - Vessel RDL-VSL-00163 requires adequate vessel headspace to prevent air locks and assure unimpeded fluid flow.	
Applicable Modes: All.	

Function: B.2	Provide Vessel Overflow Path
Detail description: Vessel RLD-VSL-00163 is equipped with an overflow line into RLD-SUMP-00040.	
Initiation: None.	
Termination: None.	
Parallel or sequential functions: • A.3 - Vessel RDL-VSL-00163 needs an overflow path to maintain adequate vessel headspace, supporting unimpeded flow of drain effluents into the vessel at all times.	
Applicable Modes: All.	

Function: B.3	Receive Sump Liquids
Detail description: RLD-SUMP-00040 is designed and sized to receive all liquids from vessel overflow, pipe leakage, vessel leakage, pump leakage, and vessel cell washdown.	
Initiation: This function initiates when the Lab Facility is in startup operations and liquids are produced in overflow, leakage, or washdown conditions.	
Termination: Liquids cease to be produced in overflow or leakage conditions.	
Parallel or sequential functions: B.4 Sump liquid transfer is initiated by operator.	
Applicable Modes: All.	

Function: B.4	Transfer Sump Liquid
Detail description: Sump Liquid is transferred from sump RLD-SUMP-00040 to Vessel RLD-VSL-00163 when the sump level is high.	
Initiation: This function is Operator initiated.	
Termination: This function is automatically terminated when the liquids have been transferred.	
Parallel or sequential functions: PCJ Sump Level high signals need to transfer liquids to vessel.	
Applicable Modes: Routine and non-routine operations.	

Function: C.1	Wash Vessel and Flush Lines
Detail description: The RLD vessel is washed and ancillary piping lines are flushed using demineralized water to retard the buildup of corrosion.	
Initiation: This function is Operator initiated.	
Termination: This function is Operator terminated.	
Parallel or sequential functions: None.	
Applicable Modes: Routine and non-routine operations.	

Function: C.2	Washdown Vessel Cell
Detail description: The RLD vessel cell, vessel, and pumps are washed using demineralized water to retard the buildup of corrosion.	
Initiation: This function is Operator initiated.	
Termination: This function is Operator terminated.	
Parallel or sequential functions: All.	
Applicable Modes: Routine and non-routine operations.	

Function: D.1	Collect Sink Drain Effluents
Detail description: Potentially low radiation sink drain effluents are collected from the following C3 classified drain areas: • Rad Lab Sinks. • Rad Lab Fume Hood Sinks. • Decontamination Room Showers & Sinks. • Process Vacuum Pump Skid. • Hotcell Maintenance Access Area. • C3 Maintenance Shop Floor/Sink. • Sample Receiving/Shipping. • Hotcell Maintenance Area Drains. • Fire water discharge from the above areas, in the case of fire. All sink drain effluents are piped and gravity drained to the low radiation process drain headers.	
Initiation: This function initiates when the Lab Facility is in startup operations.	
Termination: None.	
Parallel or sequential functions: • D.2 - sink-drain effluents are gravity drained (free-drained) via headers to vessel RLD-VSL-00164. • E.1 - Headspace must be maintained in receiving vessel RLD-VSL-00164. • C3V Lab Ventilation System must keep negative pressure in RLD-VSL-00164 to promote airflow from process drains, via process drain headers, to receiving vessel.	
Applicable Modes: All.	

Function: D.2	Transfer Sink Drain Effluents
Detail description: Potentially low radiation sink drain effluents are gravity drained (free-drained) in headers from the sink drains to vessel RLD-VSL-00164.	
Initiation: This function initiates when the Lab Facility is in startup operations and liquid effluents are present in the drain piping/headers.	
Termination: When liquid effluents are not present in the drain piping/headers.	
Parallel or sequential functions: • D.1 - Sink drain effluents are gravity drained to process drain headers. • E.1 - Headspace must be maintained in receiving vessel RLD-VSL-00164. • C3V Lab Ventilation System must keep negative pressure in RLD-VSL-00164 to promote airflow from sink drains, via process drain headers, to receiving vessel.	
Applicable Modes: All.	

Function: D.3	Receive Effluents and Liquids
Detail description: Vessel RLD-VSL-00164 receives the following effluents and liquids: • Potentially low radiation effluents and fluids from sink drains throughout the Analytical Laboratory. These fluids include all collected fluids from Function D.1. • DIW water from routine vessel wash and line flushes. • Decontamination chemicals added to wash water. • Sump transfer liquids from RLD-SUMP-00041. • Transfer effluents from vessel RLD-VSL-00163.	
Initiation: This function initiates when the Lab Facility is in startup operations.	
Termination: None.	
Parallel or sequential functions: • D.5 - Vessel inventory is mixed on operator command. • E.1 - Vessel headspace must be maintained to accommodate incoming fluids. • E.2 - Vessel overflow must be provided to maintain vessel headspace and accommodate incoming fluids. • C5V Lab Ventilation System keeps negative pressure in RLD-VSL-00164 to promote airflow from sink drains, via process drain headers, to receiving vessel.	
Applicable Modes: All.	

Function: D.4	Store Effluents
Detail description: Effluents received in vessel RLD-VSL-00164 are temporarily stored until the inventory is sufficient to warrant transfer to RLD-VSL-00165.	
Initiation: This function initiates when the Lab Facility is in startup operations and when effluent has been received.	
Termination: None. After initiation, a liquid heel is maintained in the vessel.	
Parallel or sequential functions: • D.5 - Vessel inventory is mixed on operator command.	
Applicable Modes: All.	

Function: D.5	Mix Vessel Inventory
Detail description: Mixing of the vessel inventory is performed to suspend insoluble solids and to blend liquids. Transfer pumps RLD-PMP-00182A/B mix the inventory fluids by drawing suction from the vessel and returning the inventory via the recirculation line.	
Initiation: Operator initiated.	
Termination: Operator terminated.	
Parallel or sequential functions: None	
Applicable Modes: Routine operations.	

Function: D.6	Transfer Vessel Inventory
Detail description: Mixed effluent may be batch transferred by operator command as follows: • to vessel RLD-VSL-00165 (after the PT Facility is brought on line and the C5 Subsystem is activated). • to connection designated for truck loading in startup and cold commissioning.	
Initiation: Operator initiated.	
Termination: Termination is by level stop signal or Operator stop action.	
Parallel or sequential functions: None.	
Applicable Modes: Routine operations.	

Function: E.1	Vent Vessel Headspace
Detail description: Vessel RLD-VSL-00164 must be able to receive the drain effluents from D.2 continuously. Maintaining a minimum headspace provides an air gap entry for all drain effluents introduced above the vessel overflow level – thus avoiding airlocks.	
Initiation: None.	
Termination: None.	
Parallel or sequential functions: • D.3 - Vessel RDL-VSL-00164 requires adequate vessel headspace to prevent air locks and assure unimpeded fluid flow.	
Applicable Modes: All.	

Function: E.2	Provide Vessel Overflow Path
Detail description: Vessel RLD-VSL-00164 is equipped with an overflow line into RLD-SUMP-00041.	
Initiation: None.	
Termination: None.	
Parallel or sequential functions: D.1 - Vessel RDL-VSL-00164 needs an overflow path to maintain adequate vessel headspace, supporting unimpeded flow into vessel at all times.	
Applicable Modes: All.	

Function: E.3	Receive Sump Liquids
Detail description: RLD-SUMP-00041 is designed and sized to receive all liquids from vessel overflow, pipe leakage, vessel leakage, pump leakage, and vessel cell washdown.	
Initiation: This function initiates when the Lab Facility is in startup operations and liquids are produced in overflow, leakage, or washdown conditions.	
Termination: Liquids cease to be produced in overflow or leakage conditions.	
Parallel or sequential functions: Sump liquid transfer initiated by operator.	
Applicable Modes: All.	

Function: E.4	Transfer Sump Liquid
Detail description: Transfer Sump Liquid from the RLD-SUMP-00041 to Vessel RLD-VSL-00164.	
Initiation: Operator initiated.	
Termination: This function is automatically terminated when the liquids have been transferred.	
Parallel or sequential functions: None.	
Applicable Modes: Routine and non-routine operations.	

Function: F.1	Wash Vessel and Flush Lines
Detail description: The RLD vessel is washed and ancillary piping lines are flushed using demineralized water to retard the buildup of corrosion.	
Initiation: This function is Operator initiated.	
Termination: This function is Operator terminated.	
Parallel or sequential functions: None.	
Applicable Modes: Routine and non-routine operations.	

Function: F.2	Washdown Vessel Cell
Detail description: The RLD vessel cell, vessel, and pumps are washed using demineralized water to retard the buildup of corrosion.	
Initiation: This function is Operator initiated.	
Termination: This function is Operator terminated.	
Parallel or sequential functions: All.	
Applicable Modes: Routine and non-routine operations.	

Function: G.1	Collect Hotcell Drain Effluents
Detail description: After the PT Facility is brought on line and the C5 Subsystem has been activated, potentially high radiation hotcell drain effluents will be collected from the following C5 classified drain areas: • Hotcell Floor. • Hotcell Glovebox. • Hotcell Transfer ports. • C3 Decontamination Booth. • C5 Pump & Valve Pit Sumps. In the case of fire at any time, the C5 classified drains will collect effluent from: • Fire water discharge from the above areas. All hotcell drain effluents are piped and gravity drained to the high radiation process drain headers.	
Initiation: This function initiates when the Lab Facility is in startup operations.	
Termination: None.	
Parallel or sequential functions: • G.2 - effluents are gravity drained (free-drained) via multiple headers to vessel RLD-VSL-00165. • H.1 - Headspace must be maintained in receiving vessel RLD-VSL-00165. • C5V Lab Ventilation System must keep negative pressure in RLD-VSL-00165 to promote airflow from process drains, via process drain headers, to receiving vessel.	
Applicable Modes: All.	

Function: G.2	Transfer Hotcell Drain Effluents
Detail description: Potentially high radiation hotcell drain effluents are gravity drained (free-drained) in headers from the sink drains to vessel RLD-VSL-00165.	
Initiation: This function initiates when the Lab Facility is in startup operations and liquid effluents are present in the drain piping/headers.	
Termination: When liquid effluents are not present in the drain piping/headers.	
Parallel or sequential functions: • G.1 - Hotcell drain effluents are gravity drained to process drain headers. • B.1 - Headspace is maintained in receiving vessel RLD-VSL-00165. • C5V Lab Ventilation System keeps negative pressure in RLD-VSL-00165 to promote airflow from hotcell drains, via process drain headers, to receiving vessel.	
Applicable Modes: All.	

Function: G.3	Receive Effluents and Liquids
Detail description: Vessel RLD-VSL-00165 receives the following effluents and liquids: • Potentially high radiation effluents and fluids from hotcell and glovebox drains throughout the Analytical Laboratory. These fluids include all collected fluids from Function G.1. • DIW water from routine vessel wash and line flushes. • Decontamination chemicals added to wash water. • Sump transfer liquids from RLD-SUMP-00045. • Transfer effluents from vessel RLD-VSL-00163 (after the PT Facility has gone on line). • Transfer effluents from vessel RLD-VSL-00164 (after the PT Facility has gone on line).	
Initiation: This function initiates when the Lab Facility is in startup operations.	
Termination: None.	
Parallel or sequential functions: • G.5 - Vessel inventory is mixed on operator command. • H.1 - Vessel headspace must be maintained to accommodate incoming fluids. • H.2 - Vessel overflow must be provided to maintain vessel headspace and accommodate incoming fluids. • C5V Lab Ventilation System keeps negative pressure in RLD-VSL-00165 to promote airflow from the hotcell and glovebox drains, via process drain headers, to the receiving vessel.	
Applicable Modes: All.	

Function: G.4	Store Effluents
Detail description: Effluents received in vessel RLD-VSL-00165 are temporarily stored until the inventory is sufficient to warrant transfer to the Pretreatment Facility.	
Initiation: This function initiates when the Lab Facility is in startup operations and when effluent has been received in RLD-VSL-00165.	
Termination: None. After initiation, a liquid heel is maintained in the vessel.	
Parallel or sequential functions: • G.5 - Vessel inventory is mixed on operator command.	
Applicable Modes: All. `	

Function: G.5	Mix Vessel Inventory
Detail description: Mixing of the vessel inventory is performed to suspend insoluble solids and to blend liquids. Transfer pumps RLD-PMP-00183A/B mix the inventory fluids by drawing suction from the vessel and returning the inventory via the recirculation line.	
Initiation: Operator initiated.	
Termination: Operator terminated.	
Parallel or sequential functions: None.	
Applicable Modes: Routine operations.	

Function: G.6	Transfer Vessel Inventory
Detail description: Mixed effluent may be batch transferred by operator command as follows: • to the Pretreatment Facility PTF-PWD-VSL-00044 (after the PT Facility is brought on line and the C5 Subsystem is activated). • to connection designated for truck loading in startup and cold commissioning.	
Initiation: Operator initiated.	
Termination: Termination is by level stop signal or Operator stop action.	
Parallel or sequential functions: None.	
Applicable Modes: Routine operations.	

Function: H.1	Vent Vessel Headspace
Detail description: Vessel RLD-VSL-00165 must be able to receive the drain effluents from G.2 continuously. Maintaining a minimum headspace provides an air gap entry for all drain effluents introduced above the vessel overflow level – thus avoiding airlocks.	
Initiation: None.	
Termination: None.	
Parallel or sequential functions: • D.3 - Vessel RDL-VSL-00165 requires adequate vessel headspace to prevent air locks and assure unimpeded fluid flow.	
Applicable Modes: All.	

Function: H.2	Provide Vessel Overflow Path
Detail description: Vessel RLD-VSL-00165 is equipped with an overflow line into RLD-SUMP-00045.	
Initiation: None.	
Termination: None.	
Parallel or sequential functions: None.	
Applicable Modes: All.	

Function: H.3	Receive Sump Liquids
Detail description: RLD-SUMP-00045 is designed and sized to receive all liquids from vessel overflow, pipe leakage, vessel leakage, pump leakage, and washdown of vessel cell, pump pits, and valve pit.	
Initiation: This function initiates when the Lab Facility is in startup operations and liquids are produced in overflow, leakage, or washdown conditions.	
Termination: Liquids cease to be produced in overflow or leakage conditions.	
Parallel or sequential functions: Sump liquid transfer initiated by Operator.	
Applicable Modes: All.	

Function: H.4	Transfer Sump Liquid
Detail description: Transfer Sump Liquid from the RLD-SUMP-00045 to Vessel RLD-VSL-00165	
Initiation: Operator initiated.	
Termination: This function is automatically terminated when the liquids have been transferred.	
Parallel or sequential functions: None.	
Applicable Modes: Routine and non-routine operations.	

Function: I.1	Wash Vessel and Flush Lines
Detail description: The RLD vessel is washed and ancillary piping lines are flushed using demineralized water to retard the buildup of corrosion.	
Initiation: This function is Operator initiated.	
Termination: This function is Operator terminated.	
Parallel or sequential functions: None.	
Applicable Modes: Routine and non-routine operations.	

Function: I.2	Washdown Vessel Cell, Pump & Valve Pits
Detail description: The RLD vessel, pumps, cell, and pits are washed using demineralized water to retard the buildup of corrosion.	
Initiation: This function is Operator initiated.	
Termination: This function is Operator terminated.	
Parallel or sequential functions: All.	
Applicable Modes: Routine and non-routine operations.	

Function: J.1	PCJ - Provide Monitoring, Control, and Communications
Detail description: PCJ provides non-safety monitoring and control functions. The functions that are monitored and controlled by the PCJ are: • Monitor the temperature, pressure, and level of the RLD vessel contents. • Monitor the liquid level in the sump and detect leaks into the sump. • Monitor RLD seal loops liquid level. Process control through trips and interlocks via monitoring internal conditions in the vessel, sump, and associated piping. Components such as pumps and valves are also remotely operated.	
Initiation: This function initiates when the Lab Facility is in startup operations.	
Termination: This function terminates when Lab operations are complete.	
Parallel or sequential functions: All.	
Applicable Modes: All.	

Function: K.1	Receive Electrical Power
Detail description: Electrical power to the Lab RLD equipment and instruments is supplied by the LVE system.	
Initiation: This function initiates when the Lab Facility is in startup operations.	
Termination: NA.	
Parallel or sequential functions: All.	
Applicable Modes: All.	

Function: L.1	Supply Air to Control Valves & Instruments
Detail description: Instrument air to the Lab RLD control valves and instruments is supplied by the PSA system.	
Initiation: This function initiates when the Lab Facility is in startup operations.	
Termination: NA.	
Parallel or sequential functions: All.	
Applicable Modes: All.	

Appendix C - Active Safety Instruments and Functions

No active safety instruments were identified.

Appendix D - System Procedures

RESERVED

Appendix E - System History

RESERVED

Issued by
RPP-WTP PDC

LAW Container Export Handling (LEH) System Design Description

Document title: LAW Container Export Handling (LEH) System Design Description

Document number: 24590-LAW-3ZD-LEH-00001

Revision number: 0

Type:
☑ System Design Description
☐ Facility Design Description

Originator(s): Kris Srivastava

Checked by: Neil J. Darwen

Checker's signature: _____ Signature 6/18/15 Date

Concurrence: ~~Mark Johnson~~ Jeremy Wilkins 7/21/15

Concurrence signature: _____ Manager of Production Engineering Signature 7/21/15 Date

---

Concurrence: Ian Milgate

Concurrence signature: _____ Project Technical Director and Design Authority Signature 7/23/15 Date

---

Approved by: Natalie Harkey

Approver's position: Systems Engineering Manager

Approver's signature: _____ Systems Engineering Manager Signature 7/23/2015 Date

Validation

(Signatures below indicate acceptance of the requirements established in Section 3 as the complete and correct set of requirements for this system relative to the requirement sources for which the Requirement Developer is responsible)

	Appl.	Requirement Area	Requirement Developer	Signature	Date
	☐	Architectural Design			
	☐	Civil/Structural Design			
	☑	Controls & Instrumentation Design	WAYNE UNDERHILL	[signature]	6/9/15
KS 5/6/15	~~☑~~	~~Commissioning~~			
	☐	Electrical Design & AHJ			
	☐	Fire Protection Systems Design			
	☑	Fire Protection AHJ	BEN JOHNSON	[signature]	5/6/15
	☐	HVAC Design			
	☑	Mechanical Handling Design	JULIAN LEAM	[signature]	05.07.15 AL 4/21/15
	☐	Mechanical Systems Design			
KS 4/29/15	~~☑~~	Plant Design			
	☐	Process Engineering			
	☐	Interface (External)			
	☐	Interface (Internal)			
	☑	System Functions and Requirements	NEIL DARWEN	[signature]	6/18/15
KS 5/6/15	~~☐~~	~~Equipment Environmental Qualification~~			
	☐	Equipment Seismic Qualification			
	☐	Materials Engineering / Technology			
	☐	Plant Software Design			
KS 5/6/15	~~☑~~	~~Reliability, Availability, Maintainability, Inspectability Plant Engineering~~			
	☑	Environmental Permitting (ESH)	Ty Teigen	[signature]	4-29-15
	☐	Nuclear Safety Engineering			
	☐	Criticality Safety			
	☑	Radiological Engineering	RUSSELL LAUBER	[signature]	6/2/15
	☐	Industrial Safety/Hygiene (ESH)			
	☐	Mission (WTP Contract functional/performance rqmts)			
KS 5/6/15	☑	~~Operations, Maintenance, Human Factors~~**	RANDA DUNN	[signature]	6/11/15
	☑	Quality Assurance	C.C. Albin	[signature]	4/30/15
	☐	Safeguards & Security			
	☐	Startup			
	☐	Transportation & Logistics			

* Validation not required for alpha/preliminary design description documents.

** Operations Requirements Document

History Sheet

Rev	Reason for revision	Revised by
0	Initial issue. Supersedes 24590-LAW-3YD-LEH-00001, Rev 3, *System Description for the LEH LAW Container Export Handling*.	Kris Srivastava

Contents

History Sheet iii

1 Introduction 7

1.1 System Identification 7

1.2 Limitations and Scope 7

1.3 Ownership and Maintenance 8

1.4 Definition/Glossary 8

1.5 Acronyms and System Designators 9
1.5.1 Acronyms 9
1.5.2 System Designators 9

2 General Overview 10

2.1 System Functions/Safety Functions 11

2.2 System Classification 15

2.3 Basic Operational Overview 16

3 Design Requirements 16

3.1 Requirements 16

3.2 Bases 17

3.3 References 17

3.4 General Requirements 17
3.4.1 Mission and Functional / Performance Requirements (incl. states/modes) 17
3.4.2 Nuclear Safety, ALARA, Environmental and Other Regulatory Requirements 20
3.4.3 System Interface Requirements 20
3.4.4 Other Technical, Specialty, Operations and Maintenance Requirements 21

3.5 Crane Requirements 22
3.5.1 Mission and Functional / Performance Requirements (incl. states/modes) 22
3.5.2 Nuclear Safety, ALARA, Environmental and Other Regulatory Requirements 23
3.5.3 System Interface Requirements 23
3.5.4 Other Technical, Specialty, Operations, and Maintenance Requirements 23

3.6 Shield Doors 26
3.6.1 Mission and Functional / Performance Requirements (incl. states/modes) 26
3.6.2 Nuclear Safety, ALARA, Environmental and Other Regulatory Requirements 26
3.6.3 System Interface Requirements 27

3.7 Monitoring & Controls Requirements 27
3.7.1 Mission and Functional / Performance Requirements (incl. states/modes) 27
3.7.2 Nuclear Safety, ALARA, Environmental and Other Regulatory Requirements 29
3.7.3 System Interface Requirements 29
3.7.4 Other Technical, Specialty, Operations and Maintenance Requirements 29

3.8 Relevant Codes and Standards 31
3.8.1 Codes of Record 31
3.8.2 WTP Design Criteria, Design Guides, and General Specifications 32

4 System Description 34

4.1 Configuration Information **34**
4.1.1 Description of System, Subsystems, and Major Components 34
4.1.2 Boundaries and Interfaces 36
4.1.3 Physical Layout and Location 37
4.1.4 Principles of Operation 39
4.1.5 System Reliability Features 41
4.1.6 System Control Features 41

4.2 Operations **42**
4.2.1 Initial Configuration (Pre-startup) 42
4.2.2 System Startup 42
4.2.3 Normal Operations 42
4.2.4 Off-Normal Operations 42
4.2.5 System Shutdown 42
4.2.6 Safety Management Programs and Administrative Controls 42

4.3 Testing and Maintenance **42**
4.3.1 Temporary Configurations 42
4.3.2 TSR-Required Surveillances 42
4.3.3 Non-TSR Inspections and Testing 42
4.3.4 Maintenance 43

4.4 Supplemental Information **43**

5 References and Design Documents List **44**

5.1 Source / Basis References **44**

5.2 Other References **44**

5.3 System Design Documents **45**

Appendices

Appendix A Test Objectives, Conditions, and Acceptance Criteria **A-1**
Appendix B Descriptions of System Functional Flow and Interactions **B-1**
Appendix C Active Safety Instruments and Functions **C-1**
Appendix D Reserved – System Procedures **D-1**
Appendix E Reserved - System History **E-1**

Tables

Table 2-1 Functional Analysis & Crosswalk to Requirements **15**
Table 3-1 LEH Applicable Codes & Standards **32**
Table 3-2 WTP Design Criteria, Guides, and General Specifications Applicable to LEH **32**

Figures

Figure 2–1 LEH Context Diagram 12
Figure 2–2 LEH Simplified System Diagram 13
Figure 2–3 LEH Functional Block Diagram 14
Figure 4–1 Room L-0127 Plan and Section Views 38
Figure 4–2 Room L-0127A Plan View EL. 0'-0" 39

1 Introduction

1.1 System Identification

This system design description (SDD) defines the technical and functional/performance requirements of the Low Activity Waste (LAW) Container Export Handling (LEH) system. This document details the waste treatment requirements, environmental compliance requirements, and authorization basis requirements of the LEH system as it is currently known and understood. This SDD describes the process/functional requirements of the LEH system, including:

- Services and utility requirements, operating materials and supplies, and other external interfaces
- Operations limits and design bases
- Other criteria and requirements pertinent to the design of the LEH system, exclusive of internal systems

1.2 Limitations and Scope

The scope of this document is to provide an authoritative source for the collected set of requirements applicable to the LEH system, inclusive of interface requirements with other systems. The scope of this document is limited to LEH system features that support production and/or protect equipment, personnel, and the environment. The SDD is prepared in accordance with 24590-WTP-3DP-G04B-00093, *System and Facility Design Descriptions*. The intended use of these collected requirements is to establish the following:

- Inform the LEH system design effort
- Provide a validated basis upon which to confirm implementation of requirements in design
- Provide the expected means of verification for requirements, including those that are post-construction (i.e., startup and commissioning test objectives and acceptance criteria)

All requirements established in this document are intended to be verified to be implemented in design and/or physical configuration using a graded approach commensurate with importance and risk.

Where numeric values are provided within requirements in Section 3, these values are provided without additional margin. For example if a value is established in the Basis of Design, no attempt is made to remove any margin that may or may not have gone into the establishment of that value, neither has any margin been added. Where values are stated as minimums or maximums, there is no expectation that any additional margin be applied in the verifications that the design requirements have been met. Testing required to be performed in accordance with external codes and standards must follow the rules established in those documents.

This document is intended to be used in support of design development, design verification, turnover, start up testing, and commissioning activities. This document will be maintained as current relative to changes in source requirements documents. Updates shall be made concurrent with these changes to

source requirements, or implementation shall be tracked for completion in accordance with 24590-WTP-GPG-ENG-0170, *Impact Evaluation.*

Engineers are expected to be able to use the requirements in Section 3 of this document as input for design development without recourse to the upper-tier source documents or searches of the Design Criteria Database (Technical Requirements Management System). Design engineers are still required to ensure that requirements contained with the discipline/functional standards incorporated by reference in Section 3 are followed. These documents contain additional criteria that are based on applications of external codes/standards, corporate best practices, and engineering management expectations for a consistent approach to design.

Certain requirement statements in this document are preceded by a "**[HOLD]**" notation. This notation is used when there are unresolved technical issues, known inconsistencies among source requirements, or other management suspensions of work requiring resolution. Requirements with the "**[HOLD]**" notation may be used to proceed with preliminary or committed design but shall not be used in support of fabrication or construction until the "**[HOLD]**" is removed.

Section 4 of this document is currently reserved for future inclusion of contents related to system operations and maintenance. This further content will be provided consistent with expectations of DOE-STD-3024-2011, *Content of System Design Descriptions.*

1.3 Ownership and Maintenance

The Design Authority (DA) organization is responsible for the preparation and maintenance of this document through turnover of the included systems to Operations. Thereafter, maintenance of this document is the responsibility of the Plant Operations organization; however, the Engineering DA organization retains responsibility for the establishment and definition of design requirements.

1.4 Definition/Glossary

Confinement – For consistency, regardless of usage elsewhere, confinement is used in this document to denote the controls used to prevent or minimize the release or migration of airborne contaminants, including aerosols, hazardous vapors, or gases.

Containment – For consistency, regardless of usage elsewhere, containment is used in this document to denote the controls used to prevent or minimize the release or migration of liquid or liquid-entrained contaminants.

Primary confinement / containment – The structures, systems, or components (SSCs) and their associated boundaries that confine/contain airborne and liquid contaminants under normal conditions.

Secondary confinement / containment – The structures or other design features that capture and prevent further spread or migration of airborne/liquid contaminants once they have escaped primary confinement/containment.

1.5 Acronyms and System Designators

1.5.1 Acronyms

ALARA	As Low As Reasonably Achievable
BOD	Basis of Design
COR	Code of Record
CTN	Component Tag Number
DA	Design Authority
ENG	Engineering
HVAC	Heating Ventilation and Air Conditioning
ICN	Integrated Control Network
LAW	Low Activity Waste (Facility)
IESNA	Illuminating Engineering Society of North America
ILAW	Immobilized Low Activity Waste
MTG	Metric Tons of Glass
ORD	Operations Requirements Document
PES	Programmable Electronic System
ROIN	Requirement Object Identification Number
SDD	System Design Description
SRD	Safety Requirements Document
SSC	Structures, Systems, or Components
TFC	Tank Farm Contractor
TOC	Tank Operations Contractor
WTP	Hanford Tank Waste Treatment and Immobilization Plant

1.5.2 System Designators

LEH	LAW container Export Handling system
LFH	LAW container Finishing Handling system
LTE	Lighting Electrical system
LVE	Low Voltage Electrical system (480V and below)
MHJ	Mechanical Handling control system
PPJ	Programmable Protection system
PTJ	Process and mechanical handling CCTV system

2 General Overview

The LEH system supports the operations to remove the filled and sealed ILAW product containers from the LAW container finishing lines (system LFH) and place the container on a Tank Farm Contractor (TFC) supplied transport vehicles. (Note: Tank Farm Contractor, TFC and Tank Operations Contractor, TOC are synonymous terms.)

The Export High Bay provides an environmentally controlled space to transfer ILAW product containers from system LFH to an awaiting TFC transport vehicle. The transport vehicle enters the Export High Bay for loading, and the container transfer operation is conducted remotely. Due to the radiation hazard presented by the ILAW product containers, all personnel access to the Export High Bay (L-0127) will be controlled while ILAW product containers are present. TFC transport vehicle and transport container are not yet designed.

After successful completion of the activities in the container finishing line stations, the ILAW product container ready for export is located in the monitoring/export area of system LFH. The operator determines which finishing line is prepared for ILAW product container transport. The containers in the North Finishing Line or South Finishing Line of LFH system are lifted and transported to the Export High Bay by the 10-ton Export High Bay crane, through the appropriate trap door opened by the operator. The Export High Bay crane is also used to transfer the ILAW product containers into the ILAW transport container on the transport vehicle. The TFC personnel transfer the transport container to the disposal site.

The Export Office (L-0127A) provides shielding for operations personnel during container transfer from LFH system to the TFC transport vehicle. The Shielded Personnel Access Door (SPAD) at the North end of the Export Office is operated manually. It is used to access the South Finishing Line Monitoring /Export area (L0115E) and provides shielding of operating personnel in the Export Office from ILAW product containers awaiting export from system LFH.

The Export High Bay contains a crane maintenance platform (LP-0127) to support crane maintenance activities. The maintenance platform extends the entire width of the room and is accessed via ladder. The platform provides access to the Export High Bay Crane for inspection and maintenance. Two maintenance jib cranes are provided to support removal and replacement of crane subcomponents. The system LEH equipment is designed for contact (hands-on) maintenance. Maintenance activities for the crane and associated components are in accordance with the manufacturers' operating and maintenance manuals.

Figure 2–1 provides a contextual depiction of the LEH system in terms of its primary interrelationships with other systems and utilities. This diagram does not differentiate among some utilities that have both normal and safety service provisions. This diagram is used in support of functional and performance definition at the system level.

Figure 2–2 provides a simplified system diagram of the overall LEH system. Blue arrows are used in these figures to highlight the primary flow path of the LEH system and the black arrows illustrate the supporting systems and utilities. See Section 1.5 for the list of relevant system designators.

2.1 System Functions/Safety Functions

This section defines LEH functions and attributes that need to be addressed by the system design. Figure 2-3 provides the functional block diagram for the LEH system, indicating the internal and external systems and utilities that provide the primary support or interface for that function. Section 3 provides the design and performance design requirements to meet both functional and other requirements.

System interfaces are provided for reference only. See Section 1.5 for the list of relevant system designators.

The functions included in Figure 2–3 LEH Functional Block Diagram are the primary and secondary level functions of the LEH system. These functions are further described in Table 2-1 Functional Analysis & Crosswalk to Requirements
. Where appropriate to support definition of functional and design requirements, functions have been further decomposed and additional levels of supporting functions are also described. The requirement section number provides the location of the applicable functional analysis incorporated into system requirements.

Appendix B provides a further decomposition of system functions, including initiating, terminating, and integrating events and functions.

Figure 2–1 LEH Context Diagram

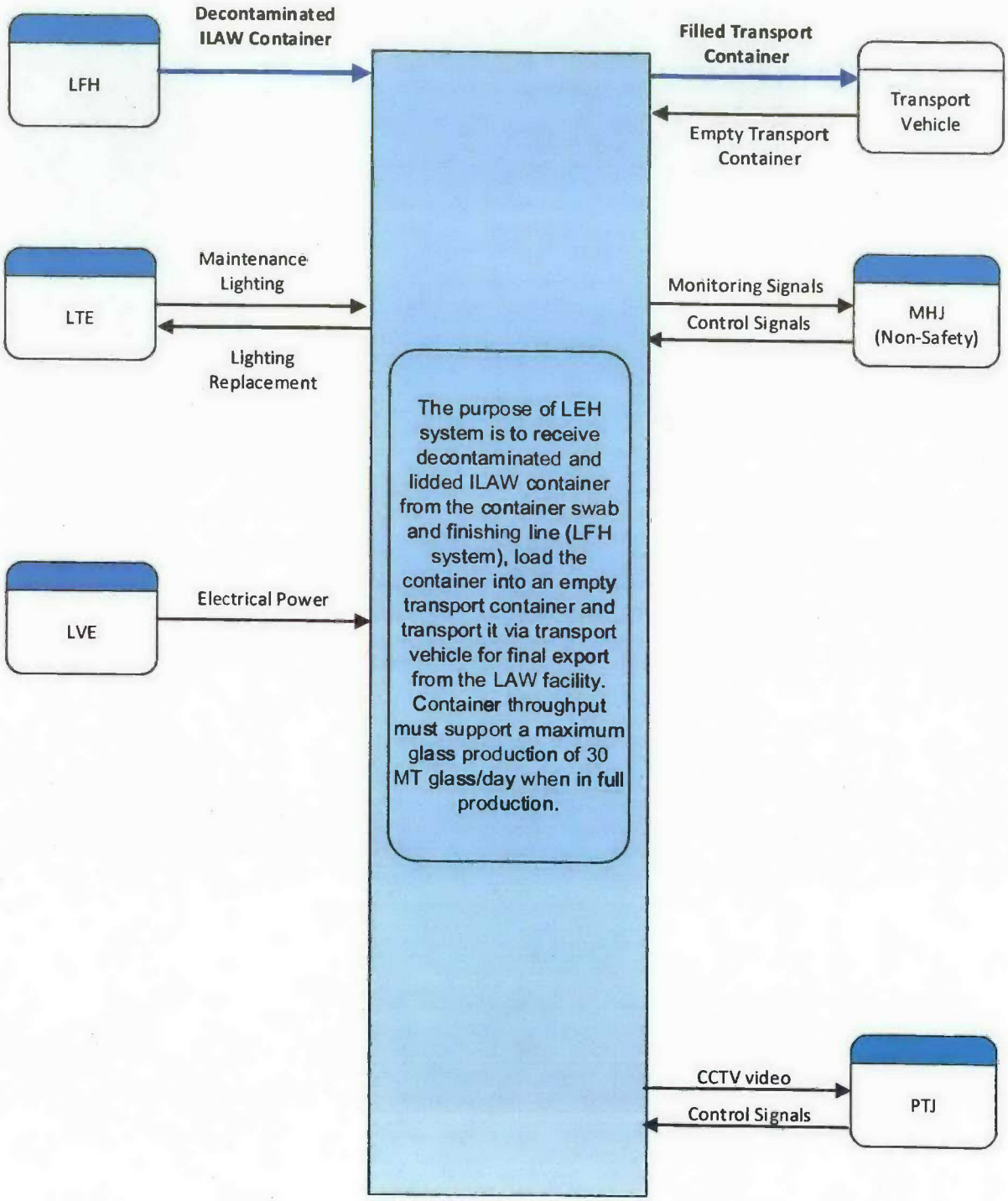

Figure 2–2 LEH Simplified System Diagram

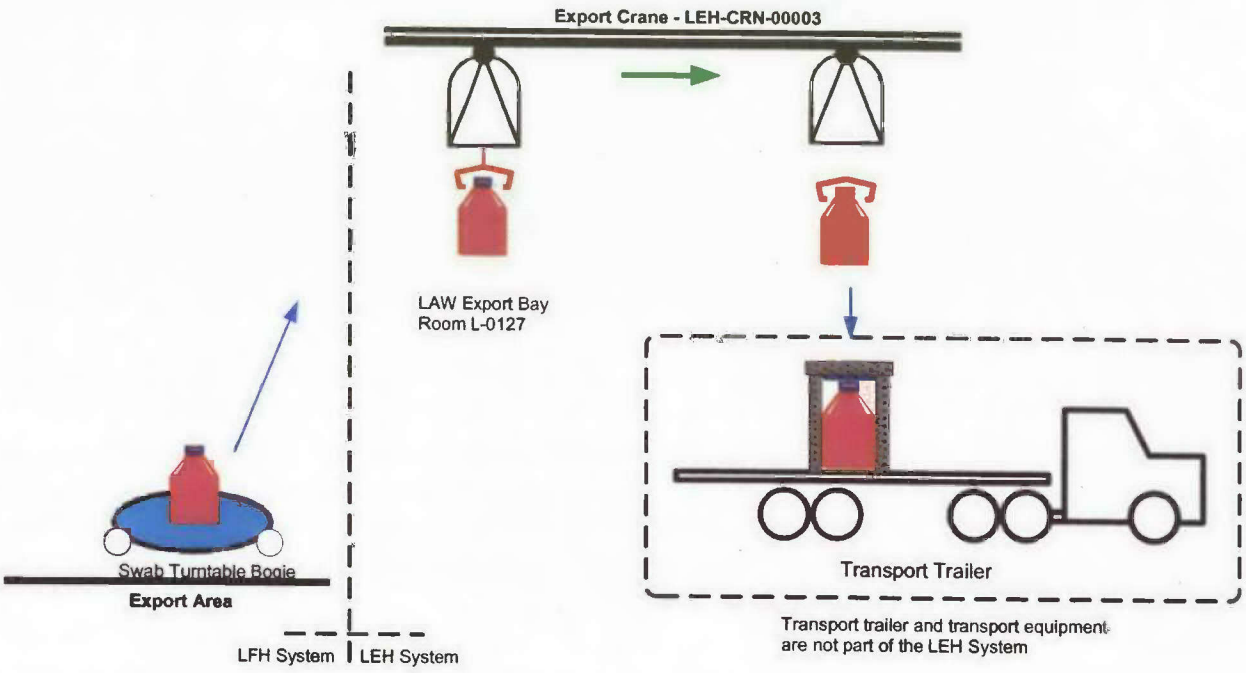

Figure 2–3 LEH Functional Block Diagram

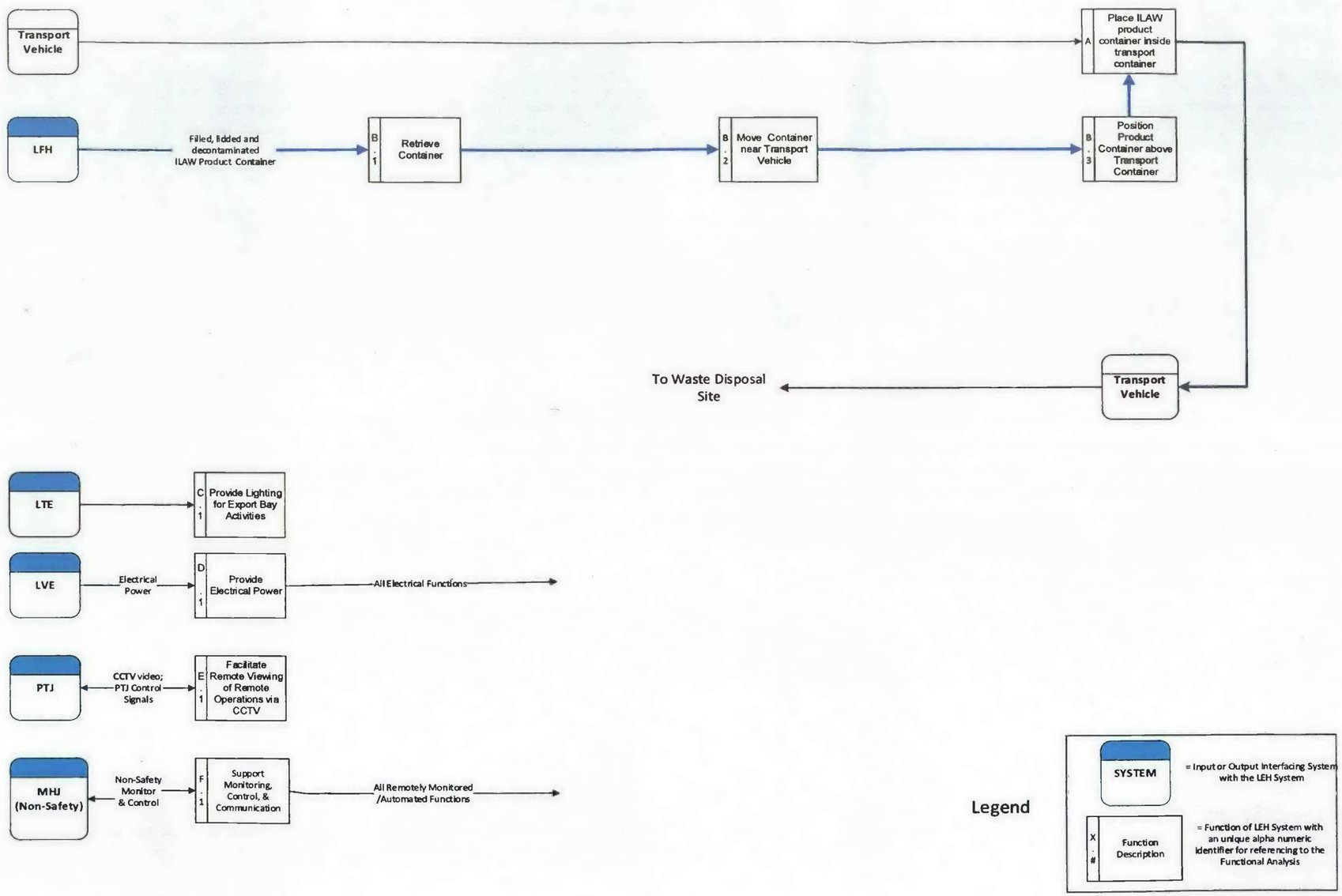

Table 2-1 Functional Analysis & Crosswalk to Requirements

Reference	Functional Analysis Description	Requirement Section No.
A	**Place ILAW product container - Insert product container inside transport container, using Export High Bay Crane (24590-LAW-MJ-LEH-CRN-00003), and disengage grapple.**	3.4.1.4
B.	**Retrieve ILAW container from LFH and transfer it inside the transport container for disposal.**	N/A
B.1	Retrieve ILAW product container –Retrieve product container from LFH North or South export area (dependent on which finishing line is ready) by lowering and engaging grapple through the trap door to the product container and raising it to transfer height by using Export High Bay Crane (24590-LAW-MJ-LEH-CRN-00003).	3.4.1.4
B.2	Move product container – Using Export High Bay Crane, move the product container near transport vehicle.	3.4.1.4
B.3	Position product container – Position the product container above transport container.	3.4.1.4
C.	**Lighting**	N/A
C.1	Provide Lighting for Export Bay Activities – LAW System LTE provides lighting to the Export High Bay via lights on the export bay crane to illuminate the working area below the crane.	3.5.3.1
D.	**Electrical Power**	
D.1	Provide Electrical Power - The low voltage electrical (LVE) system provides electrical power to the LEH equipment.	3.5.3.1
E.	**Remote Viewing**	
E.1	Facilitate Remote Viewing of Remote Operations via CCTV – The LAW Process and Mechanical Handling CCTV System (PTJ) provides multi-camera system that is mounted to the Export Bay Crane to observe remote operation.	3.4.4.3
F.	**Mechanical Handling Monitoring and Control**	N/A
F.1	Support Monitoring, Control, and Communication - The mechanical handling control system (MHJ) provides non-safety monitoring and control functions.	3.7.1.1

2.2 System Classification

The LEH system contains components with the following classifications/designations:

- ☐ Safety Class
- ☐ Safety Significant
- ☒ Dangerous Waste Permit affecting
- ☐ Air Permit affecting
- ☐ Waste Acceptance Impacting

☒ General

2.3 Basic Operational Overview

A functional description of the system is provided in Sections 2 and 2.1, which provide the context diagram for the system, interfaces with other systems, a simplified diagram of the system, a functional block diagram, and descriptions of the system functions. A basic operational overview of the system is provided below; detailed operational information is provided in section 4.

The LEH system is located in the LAW facility of the Hanford Tank Waste Treatment and Immobilization Plant (WTP). The LEH provides mechanical handling equipment to remove filled and sealed Immobilized Low-Activity Waste (ILAW) product containers from the LAW finishing line (system LFH) and place the ILAW container into a transport container on Tank-Farm Contractor (TFC) supplied transport vehicles. The LEH provides maintenance facilities and equipment for the LEH production equipment.

With regard to boundaries, the LEH system begins at the LFH trap doors (LFH-DOOR-00002/00018) and ends at the transport container delivered by the Tank Farm Contractor vehicle.

3 Design Requirements

3.1 Requirements

Requirements are documented in Sections 3.1 through 3.9. Each requirement statement is accompanied by a basis discussion (as needed) and the expected means of verification. Requirements must be met in design. If a requirement stated in this document cannot be met in design, then a revision to the requirement needs to be pursued, if possible, or the design must be changed to meet the requirement.

Requirements preceded by "**[HOLD]**" may only be used in support of preliminary or committed design, which shall also be issued with appropriate holds per 24590-WTP-3DP-G04B-00046, *Engineering Drawings* procedure. They may not be used in support of fabrication or construction.

The following abbreviations are used to designate the selected method for verification (see 24590-WTP-GPG-ENG-0161, *Technical Requirements Management*, for additional guidance concerning methods of verification):

(I) Inspection
(A) Analysis
(D) Demonstration
(T) Test

The following abbreviations are used to designate the organization responsible for performing the verification:

(ENG) Engineering
(CON) Construction
(SU) Startup

(COM) Commissioning
(SUP) Supplier

3.2 Bases

Basis discussions are provided as needed to explain the decomposition or interpretation from the originating source requirement(s). Where a HOLD has been applied to a requirement, this section will include the basis for the HOLD. Where included, basis discussions provide supplementary information to help the reader understand the origin or intent of a requirement. Basis statements do not include requirements and are not to be considered as requirements.

3.3 References

The requirements include a source document reference and a requirement object identification number (ROIN) included in brackets following the requirement statement. Each unique source document reference, with ROIN number(s), is bracketed separately. Requirements may include a reference to the Section 2.1 Functional Description which are listed with parentheses following the source document and ROIN number references. A complete listing of all source references may be found in Section 5.1.

3.4 General Requirements

3.4.1 Mission and Functional / Performance Requirements (incl. states/modes)

3.4.1.1 LEH Production Rates

Requirement: The LEH system shall be designed to support LAW facility design capacity of 30 MTG/day and treatment capacity of 21 MTG/day (which is an availability of 70% multiplied by design capacity). This equates to a normal production rate of five (5) ILAW packages/day. [Section 6.3.2, BOD, ROIN: 1-40495] [Section 1.4.2, ICD 15, ROIN: 1-26749] [Section C.7(b)(2), DE-AC27-01RV14136, ROIN: 1-25955]

Basis Discussion: The LEH system works in conjunction with other LAW systems to support a 30 MTG/day design production rate with availability of 70% (21 MTG/day). Each container contains 6 MTG which leads to a throughput capacity of 5 container per day at 100% availability.

Verification: Verification is expected to be achieved through:

Verif. Method	Verif. By	Plan	Notes/Comments
A	ENG	Perform an analysis to confirm that LEH system will support the production rate of 30 MTG/day and availability of 70% (21 MTG/day).	
I	ENG	Review of design to verify conformance to throughput analysis requirement.	

3.4.1.2 Design Life

3.4.1.2.1 Design (Operating) Life

Requirement: Non replaceable, permanent LEH system plant equipment shall be designed for a minimum design life of 40 years, inclusive of maintenance. All non-maintainable equipment shall be designed to last the life of the facility (40 years). Design life of equipment shall consider the effects of chemical, radiological and thermal exposure. [Section 11.1.1, BOD, ROIN: 1-41120]

Basis Discussion: Equipment and material selection is based on proven performance, value engineering principles, and fit-for-function principles. The selection of equipment and materials is further addressed in detail as the design progresses. Equipment design needs to consider the routine environmental exposure under normal operations for non-safety equipment - this minimizes the need for equipment maintenance, exposure, and radiological waste generation in radiological areas [ALARA]

Verification: Verification is expected to be achieved through:

Verif. Method	Verif. By	Plan	Notes/Comments
I	ENG	Review design to verify design life of SSCs is documented in procurement documents and supported by supplier certificate of conformance.	

3.4.1.2.2 Seismic Design for Interaction Effects

Requirement: All permanently mounted LEH equipment, shall at a minimum be designated Seismic Category-IV (UBC Zone 2B). Interaction effects shall be considered when determining the seismic category of individual items and, where an adverse seismic interaction with SC or SS equipment exists, adequate measures shall be taken to preclude the adverse interaction. [Section 10.2.15, BOD, ROIN: 45-21847].

Basis Discussion: There are no LAW Preliminary Documented Safety Analysis (PDSA) Safety Class [SC], Safety Significant [SS], or Additional Protection Class [APC] SSCs associated with the LEH. In accordance with Procedure 24590-WTP-GPG-ENG-033, Evaluation for Seismic Interaction Effects, equipment that is non-safety may be identified as having a potential for adverse interaction with safety equipment during a seismic event. Where a resolution strategy is selected to increase the seismic category of the source SSC to protect the safety (target) SSC, the resulting seismic category of the equipment may be greater than SC-IV. In those cases, the equipment design should be verified to meet the higher seismic performance category such that the target SSC is protected.

Verification: Verification is expected to be achieved through the following:

Verif. Method	Verif. By	Plan	Notes/Comments
I	ENG	Evaluate the LEH system for seismic interaction effects per 24590-WTP-GPG-ENG-033 and devise a control strategy for all open interactions.	Document, as required, in a Seismic Interaction List.
A/T	ENG/SUP	Analysis or testing performed on SSCs to verify the ability to withstand the seismic loadings for their respective seismic categories to the extent necessary to prevent interactions.	Documented in an Equipment Seismic Qualification (ESQ) Review Form or supplier seismic design report.
I	ENG	Review design to verify conformance to the as-tested/as-analyzed configuration.	

3.4.1.3 Decontaminated Equipment Durability

Requirement: The LEH system equipment and shield doors subject to decontamination shall be designed to withstand this process without any reduction of functionality through degradation of the electrical, mechanical, or any other components involved. [Sections 7.1, 9.1, 14.16, ORD, ROIN: 8-488, ROIN: 8-8065, ROIN: 8-475] [Section 11.8.3.2, BOD, ROIN: 2-43173]

Basis Discussion: Equipment operating in a contaminated environment is monitored and, if necessary, decontaminated before maintenance. The specifications must convey that the equipment design accounts for these processes.

The LAW Facility is a hands-on maintenance facility and cranes shall be decontaminated using local decontamination methods such as wipes, strippable coating and tack cloths in lieu of gross decontamination methods (steam, warm water, detergent solutions). [ALARA]

The following equipment are subject to decontamination:

- Export High Bay Crane (LEH-CRN-00003)
- Export Maintenance Jib Cranes (LEH-CRN-00005, 00006)
- Export Container Grapple (LEH-TOOL-00002)
- Container Grapple Stand (LEH-MHAN-00002)
- Shielded Personnel Access Doors (SPADs) (LEH-DOOR-00005, 00007)

Verification: Verification is expected to be achieved through:

Verif. Method	Verif. By	Plan	Notes/Comments
I	ENG	Review the LEH design to verify equipment/components listed above can withstand decontamination without degradation or reduction in equipment functionality.	

3.4.1.4 ILAW Container Transfer

Requirement: WTP contractor shall provide facilities and equipment to transfer ILAW product container to transport vehicle [Section 6.5, BOD, ROIN: 1-40525] [Section 1.2, Table 1, ICD 15, ROIN: 2-39963]

Basis Discussion: LEH system is designed to accomplish the following: (Ref: Figure 2-3, Table 2-1)

- Retrieve filled, lidded, and decontaminated ILAW container from LFH container monitoring/export area (B.1).
- Transport the ILAW product container to the transport vehicle (B.2).

Current configuration of the transport vehicle is unknown.

Verification: Verification is expected to be achieved through:

Verif. Method	Verif. By	Plan	Notes/Comments
I	ENG	Review the design for capability to perform the listed container transfer.	

3.4.2 Nuclear Safety, ALARA, Environmental and Other Regulatory Requirements

In current design, all SSCs in LEH system are Non-Safety.

3.4.2.1 Room Environment Conditions for SSCs

Requirement: The LAW Facility LEH system equipment and components tagged non-safety shall be designed to operate and withstand the internal environment conditions of the LAW facility. [Section 12, Table 12-1, BOD, ROIN: 2-39186, ROIN: 2-39187, ROIN: 2-39193, ROIN: 2-39194] [Section 16.1, ORD, ROIN: 8-7000] [Sections 11.16, 16.1, ORD, ROIN: 14-1248E, ROIN: 8-7000]

Basis Discussion: Non-safety SSCs are designed to function as intended in the room environment conditions associated with their location.

Verification: Verification is expected to be achieved through:

Verif. Method	Verif. By	Plan	Notes/Comments
I	ENG	Review design of non-safety SSCs to verify compliance with BOD Table 12-1 conditions.	

3.4.3 System Interface Requirements

Requirements associated with specific system interfaces are discussed in the subsequent requirement sections titled "System Interface Requirements."

3.4.4 Other Technical, Specialty, Operations and Maintenance Requirements

3.4.4.1 Maintainable or Replaceable Equipment and Components

Requirement: Recovery features shall be provided in the equipment designs to retrieve failed cranes to their maintenance area or provisions for in-place maintenance shall be provided. Crane designs shall be kept standardized and common components shall be used to the extent practical. Maintainable crane components shall be of modular design with service disconnects to simplify replacement. [Section 11.8.3.2, BOD, ROIN: 2-43170]

Basis Discussion: Equipment and components within Export High Bay area that could fail during operations are designed for safe recovery or replacement during worst-case credible failure, or redundancy. Handling features help to facilitate interfacing with equipment or components when using handling equipment such as by cranes.

Verification: Verification is expected to be achieved through:

Verif. Method	Verif. By	Plan	Notes/Comments
I	ENG	Review design to verify that handling features are provided for the crane components.	Document in an evaluation/assessment.

3.4.4.2 Grapples

All LAW grapples are of the same design for consistency and interchangeability. Requirements associated with the grapples are included in 24590-LAW-3ZD-LRH-00001, *LAW Container Receipt Handling (LRH) System Design Description.*

Grapple CTN:
Container grapple: 24590-LAW-FH-LEH-TOOL-00002
Container grapple (spare): 24590-LAW-FH-LEH-TOOL-00003
[ALARA]

3.4.4.3 Viewing Operations

Requirement: Cameras and/or shield windows shall be provided for remote viewing of LEH system mechanical handling equipment requiring remote operation. [Sections 11.5, 12.4, 14.16, ORD, ROIN: 8-9102, ROIN: 1-40045, ROIN: 8-14259, ROIN: 8-14261, ROIN: 8-14262, ROIN: 8-468, ROIN: 8-14269] [Sections 7.2.5, 9.3, BOD, ROIN: 1-40642, ROIN: 1-40904, ROIN: 1-40905, ROIN: 1-40906]

Basis Discussion: Cameras and/or shield windows for viewing operations are located to provide optimum viewing angles and distance to suit the operations. CCTV monitoring is provided adjacent to or integrated with remote operator interfaces in the control rooms and local operator interfaces when operations are not visible. [ALARA]

Verification: Verification is expected to be achieved through the following:

Verif. Method	Verif. By	Plan	Notes/Comments
I	ENG	Review design to verify cameras and/or shield windows are provided for viewing of remotely operated LEH equipment.	
D	SU/ COM	Demonstrate cameras and/or shield windows provide adequate viewing to perform required remote LEH mechanical handling operations.	Adequate viewing capabilities may be demonstrated as part of the verification demonstration for remote operation of LEH equipment.

3.4.4.4 Remote Operation

Requirement: LEH mechanical handling equipment requiring remote operation, including cranes and hoists, shall be operated from remote operator interfaces using CCTV monitors or through shield windows by direct observation. [Sections 11.5, 12.4, 14.16, ORD, ROIN: 8-9102, ROIN: 1-40045, ROIN: 8-14259, ROIN: 8-468, ROIN: 8-14269] [Sections 7.2.5, 9.3, BOD, ROIN: 1-40642, ROIN: 1-40904, ROIN: 1-40905, ROIN: 1-40906]

Basis Discussion: Cranes and hoists in maintenance areas are not required to be operated remotely. [ALARA]

Verification: Verification is expected to be achieved through:

Verif. Method	Verif. By	Plan	Notes/Comments
I	ENG	Review design to verify remotely operated LEH equipment can be operated from various remote operator interfaces using CCTV monitors and/or shield windows.	
D	SU/ COM	Demonstrate operation of remotely operated LEH equipment from remote operator interfaces using CCTV monitors and/or shield windows.	Physical demonstration

3.5 Crane Requirements

3.5.1 Mission and Functional / Performance Requirements (incl. states/modes)

3.5.1.1 Codes and Standards

Requirement: The Export High Bay Crane and Export Maintenance Jib Cranes shall be designed per applicable codes. [Sections 11.1.2, 11.8.1, BOD, ROIN: 40-10531]

Basis Discussion: Cranes are to be designed per following codes:

- LEH-CRN-00005 and LEH-CRN-00006: ASME B30.16
- LEH-CRN-00003: CMAA-70, ASME B30.2

Verification: Verification is expected to be achieved through:

Verif. Method	Verif. By	Plan	Notes/Comments
I	ENG	Review design of the cranes to verify adherence to applicable codes and standards.	

3.5.2 Nuclear Safety, ALARA, Environmental and Other Regulatory Requirements

None.

3.5.3 System Interface Requirements

3.5.3.1 Crane Lighting

Requirement: Lights shall be mounted on cranes to illuminate the working area below (except on single girder cranes) with adequate lighting below. [Section 14.16, ORD, ROIN: 8-479] [Section 11.8.3.2, BOD, ROIN: 2-43174]

Basis Discussion: The recommended lighting levels are to be provided per IESNA Recommended Practices (RP-1, RP-7, and RP-8) as discussed in Section 8.6.1.1 of the BOD.

Verification: Verification is expected to be achieved through:

Verif. Method	Verif. By	Plan	Notes/Comments
I	ENG	Review design documentation to verify lights are mounted on the Export High Bay cranes.	
T	SU/COM	Measure illumination levels below the Export High Bay cranes to verify lighting complies with IESNA Standard.	

3.5.4 Other Technical, Specialty, Operations, and Maintenance Requirements

3.5.4.1 Cranes and Hoists Design

3.5.4.1.1 Modular Design

Requirement: Maintainable crane components are of modular design with service disconnects to simplify replacement. [Section 11.8.3.2, BOD, ROIN: 2-43170] [Sections 7.4, 20.0, ORD, ROIN: 8-493, ROIN: 1-39957, ROIN: 8-4687]

Basis Discussion: None.

Verification: Verification is expected to be achieved through:

Verif. Method	Verif. By	Plan	Notes/Comments
I	ENG	Review cranes design for common design features, and incorporation of modular components.	

3.5.4.1.2 Materials of Construction

Requirement: Cranes and rails shall be of carbon steel construction. [Section 11.8.3.2, BOD, ROIN: 2-43170]

Basis Discussion: None.

Verification: Verification is expected to be achieved through:

Verif. Method	Verif. By	Plan	Notes/Comments
I	ENG	Verify cranes and rails are of carbon steel.	

3.5.4.2 Quick Connectors

Requirement: The LEH crane modules shall have quick connectors to allow rapid reconnection of cabling or other services. [Section 14.16, ORD, ROIN: 8-469] [Section 11.8.3.2, BOD, ROIN: 2-43170]

Basis Discussion: None. [ALARA]

Verification: Verification is expected to be achieved through:

Verif. Method	Verif. By	Plan	Notes/Comments
I	ENG	Review crane design for incorporation of quick connectors.	

3.5.4.3 Crane Brakes

Requirement: Brakes on crane and hoist drive functions shall be designed to be set when power is off. [Section 14.16, ORD, ROIN: 8-478] [Section 11.8.3.2, BOD, ROIN: 2-43174]

Basis Discussion: To prevent the cranes from travelling along the tracks and the hoist from raising or lowering when not in operation, the brakes on all drive functions are set when the power is off.

Verification: Verification is expected to be achieved through:

Verif. Method	Verif. By	Plan	Notes/Comments
I	ENG	Review design to verify brakes are set when crane power is off.	
D	SU/COM	Demonstrate that crane brakes engage with a loss of power.	

3.5.4.4 Lubrication Systems

Requirement: Crane systems shall be designed with lubrication systems that are accessible for ease of maintenance. [Section 14.16, ORD, ROIN: 8-486] [Section 11.8.3.2, BOD, ROIN: 2-43174]

Basis Discussion: None. [ALARA]

Verification: Verification is expected to be achieved through:

Verif. Method	Verif. By	Plan	Notes/Comments
I	ENG	Review crane design for accessible lubrication systems.	

3.5.4.5 Crane Interference

Requirement: Maintenance cranes shall be designed and installed such that there is no interference with normal operations of the process cranes. [Section 14.16, ORD, ROIN: 8-471] [Section 11.8.3.2, BOD, ROIN: 2-43171]

Basis Discussion: None.

Verification: Verification is expected to be achieved through:

Verif. Method	Verif. By	Plan	Notes/Comments
I	ENG	Review design to verify maintenance cranes do not interfere with process crane operation.	

3.5.4.6 Crane Recovery

Requirement: Recovery features shall be provided in the equipment designs to retrieve failed cranes to their maintenance area, or provisions for in-place maintenance are provided. [Sections 11.3.2.2, 11.8.3.2, BOD, ROIN: 1-41136, ROIN: 2-43170] [Sections 9.1, 14.1, 14.16, ORD, ROIN: 8-4350, ROIN: 8-3584, ROIN: 8-472, ROIN: 8-481]

Basis Discussion: Failed Export High Bay Crane (LEH-CRN-00003) is to be retrieved to the maintenance platform.

Verification: Verification is expected to be achieved through:

Verif. Method	Verif. By	Plan	Notes/Comments
I	ENG	Review design to verify that recovery features are provided for the Export High Bay Crane.	
D	SU/COM	Demonstrate recovery capability in accordance with 24590-WTP-PL-RACT-RT-0001, *WTP Remotability Verification Plan.*	

3.5.4.7 Crane Support for Equipment Transfer

Requirement: The RWH cranes shall be designed to support the removal and replacement of equipment as designated by plant operations. [Section 20.0, ORD, ROIN: 8-4687]

Basis Discussion: The source requirements (WTP Contract, PDSA, ORD, SRD) do not address in detail the removal and replacement of failed equipment by the LEH system. The specific procedures for these derived tasks are developed and managed by the plant operations team.

Verification: Verification is expected to be achieved through:

Verif. Method	Verif. By	Plan	Notes/Comments
A	ENG	Perform analysis to verify that cranes can support the removal and replacement of the required equipment as designated by plant operations.	

3.6 Shield Doors

3.6.1 Mission and Functional / Performance Requirements (incl. states/modes)

3.6.1.1 Shielded Personnel Access Doors (SPADs)

Requirement: Shielded Personnel Access Doors (SPADs) shall be designed with airtight seals or engineered gap. [Section 7.1, ORD, ROIN: 8-489] [Section 11.8.3.2, BOD, ROIN: 2-43176]

Basis Discussion: Since we are going from C1 area to a C2 area, airtight seals or engineered gap is not required, however, the following SPADs have airtight seals:

- 24590-LAW-AD-LEH-DOOR-00005
- 24590-LAW-AD-LEH-DOOR-00007

[ALARA]

Verification: Verification is expected to be achieved through:

Verif. Method	Verif. By	Plan	Notes/Comments
A	ENG	Review SPAD design for airtight seals.	

3.6.2 Nuclear Safety, ALARA, Environmental and Other Regulatory Requirements

3.6.2.1 Ease of Decontamination

Requirement: Shield doors shall be designed for ease of decontamination. [Section 7.1, ORD, ROIN: 8-488]

Basis discussion: Door decontamination is performed using the same methods/agents used on the surrounding room. [ALARA]

Verification: Verification is expected to be achieved through:

Verif. Method	Verif. By	Plan	Notes/Comments
I	ENG	Review shield door design, and facility architectural room finish schedules, to verify coatings applied to shield door panels are, at	Document in an evaluation/assessment. (See 24590-WTP-

Verif. Method	Verif. By	Plan	Notes/Comments
		a minimum, equivalent to those specified for the room that houses the door panel.	3PS-AFPS-T0001, Appendix D, Note 1. Stainless steel cladding exceeds all coating systems.)

3.6.3 System Interface Requirements

None.

3.7 Monitoring & Controls Requirements

3.7.1 Mission and Functional / Performance Requirements (incl. states/modes)

3.7.1.1 Mechanical Handling Control System

Requirement: LEH mechanical handling equipment requiring remote control shall be controlled and monitored through the MHJ. [Section 9.6.2, BOD, ROIN: 8-15066]

Basis Discussion: The MHJ system utilizes a number of operator interfaces for Facility Control Room (FCR) control, cave face control, or local control, and provides the following functions for LEH where appropriate:

- Sequence control of discrete mechanical handling equipment
- Device interlocks
- Control of process functions integral to the mechanical handling system
- Control of package-supplied equipment

Equipment located in normally accessible locations (C1/R1 to C3/R3 areas), which require remote (MHJ) control also has the ability to be controlled locally. Some equipment located in normally accessible locations, may not have any connection to the MHJ and is only operated directly in a local mode.

Verification: Verification is expected to be achieved through the following:

Verif. Method	Verif. By	Plan	Notes/Comments
I	ENG	Review the LEH design to verify equipment requiring remote control is controlled through the MHJ.	
D	SU/COM	Demonstrate equipment control using the MHJ.	

3.7.1.2 Level of Automation

Requirement: Mechanical handling equipment requiring remote control will be controlled through the MHJ using manual control to the extent practical. Automatic control will be used for repetitive sequences, or where operating complexity or event timing requirements preclude manual operation. Automatic control for repetitive sequences shall utilize operator-initiated sequence control, where practical and safe, up to critical steps requiring operator decision or verification. Sequences shall also be capable of stepping through each step, provided that doing so does not create safety hazards. Manual mode will be provided

for equipment operated in automatic mode to enable equipment operation outside of automatic mode. [Sections 7.1, 7.1.1, 7.3.5.1, 7.3.5.2, BOD, ROIN: 1-40611, ROIN: 1-40618, ROIN: 1-40652, ROIN: 1-40655] [Sections 11.10, 11.12.3, 11.12.3.1, 11.12.3.2, 11.12.3.4, 14.1, ORD, ROIN: 8-6071, ROIN: 8-8276, ROIN: 1-40006, ROIN: 8-8289, ROIN: 1-40008, ROIN: 1-40010, ROIN: 8-3586]

Basis Discussion: Operation of equipment requiring remote control through the MHJ is operated in manual mode to the extent possible to reduce the need for high maintenance on automated equipment.

Verification: Verification is expected to be achieved through the following:

Verif. Method	Verif. By	Plan	Notes/Comments
I	ENG	Review LEH design to verify automation of repetitive sequences using sequence control and inclusion of manual mode for device operation outside of automatic mode.	

3.7.1.2.1 Limited Automation for Cranes and Hoists

Requirement: Cranes and hoists shall be designed with limited automation, as they will be primarily operated directly via the MHJ in manual mode or locally using pushbuttons on local panels or control pendants. [Sections 11.10, 11.12.3.2, 11.12.3.6, 14.16, ORD, ROIN: 8-6071, 1-40008, 1-40012, 8-487] [Section 7.3.6, BOD, ROIN: 1-40663]

Basis Discussion: Direct operation of cranes and hoists reduces the need for high maintenance on automated equipment.

Verification: Verification is expected to be achieved through the following:

Verif. Method	Verif. By	Plan	Notes/Comments
I	ENG	Review LEH design to verify cranes and hoists can be primarily operated directly and limited automation is provided.	

3.7.1.3 Local Mode

Requirement: LEH equipment operated under MHJ control shall have a local mode that allows direct actuation of the equipment from a local panel, pendant, or MCC, disregards MHJ commands and interlocks, maintains independent protection interlocks, and provides a local/remote status signal to the MHJ. The selection of local control will be logged by the control systems. Some equipment may not have any connection to the MHJ and will only be operated directly in local mode. Operator actions for this equipment will not be recorded by the MHJ. [Section 7.3.5.3, BOD, ROIN: 1-40658, ROIN: 1-40659] [Sections 11.10, 11.12.3.6, ORD, ROIN: 8-6071, ROIN: 8-6072, ROIN: 8-6073, ROIN: 1-40012]

Basis discussion: Local mode allows equipment to be operated for maintenance/diagnostic purposes. Independent protection interlocks remain in-force to prevent mis-operation of equipment.

Verification: Verification is expected to be achieved through the following:

Verif. Method	Verif. By	Plan	Notes/Comments
I	ENG	Review design to verify local mode features and functions are provided.	
D	SU/COM	Demonstrate the operability of local mode features and functions during operation from the local control panels or pendants.	

3.7.2 Nuclear Safety, ALARA, Environmental and Other Regulatory Requirements

None.

3.7.3 System Interface Requirements

None.

3.7.4 Other Technical, Specialty, Operations and Maintenance Requirements

3.7.4.1 Cranes and Hoists

3.7.4.1.1 Standardized Operator Controls

Requirement: Standardized operator controls are provided for cranes and hoists facility-wide, as much as possible, to avoid errors that might occur when moving from one crane/hoist to another. Where possible, commercially available items without modification shall be selected from the manufacturer's standard range. [Section 14.16, ORD, ROIN: 8-473] [Section 9.2.1, BOD, RON: 1-40901]

Basis Discussion: Differences to accommodate specialized crane/hoist operations are acceptable.
Verification: Verification is expected to be achieved through the following:

Verif. Method	Verif. By	Plan	Notes/Comments
I	ENG	Review design and/or physical configuration to verify similar control units, including push-buttons on local control panels, pendants, and radio control units, are provided for similar cranes and hoists facility-wide.	May be documented in a facility-wide assessment/report. Operations to participate in or review assessment.

3.7.4.1.2 Off-board Logics

Requirement: Cranes and hoists that enter C5/R5 areas shall have no on-board logic, and all power and signal cables shall be marshalled off-board. [Section 14.16, ORD, ROIN: 8-470]

Basis Discussion: On-board logic is permissible in normally accessible areas (C1/R1 to C3/R3). [ALARA]

Verification: Verification is expected to be achieved through the following:

Verif. Method	Verif. By	Plan	Notes/Comments
I	ENG	Review design of cranes and hoist in C5/R5 areas to verify power and signals cables are marshalled off-board, and devices that execute control logic are located off-board.	

3.7.4.2 Emergency Stop (E-Stop)

Requirement: Where operators will be co-located with operating equipment and physical injury is credible, dedicated emergency-stop (E-Stop) buttons shall be provided near the equipment. The location of such stops will depend on the equipment's physical and operational characteristics. [Section 7.3.9.1, BOD, ROIN: 1-40683] [Section 11.12.5.3, ORD, ROIN: 1-40021]

Basis Discussion: Guidance for the application of E-stops for equipment at the WTP is provided in 24590-WTP-ES-J-11-001.

Verification: Verification is expected to be achieved through:

Verif. Method	Verif. By	Plan	Notes/Comments
A	ENG	Evaluate any potential credible events that may lead to operator injury for every piece of MH equipment located in normally accessible areas to determine which equipment requires E-stops.	May be documented in an evaluation/ assessment report. Operations to participate in or review assessment.
I	ENG	Review of design to verify incorporation of emergency stops on equipment deemed to have a credible injury hazard.	
D	SU/COM	Demonstrate the capability to stop equipment using the equipment's dedicated emergency stop.	

3.7.4.3 Emergency Stop Reporting and Reset

Requirement: When the E-stops are activated, the equipment shall remain in a shutdown state until the circuit is physically reset to prevent equipment restart while the dangerous condition exists. Each individual E-stop, however configured, shall report its status back to their respective control system. Equipment with MHJ connection shall report E-stop status both to the MHJ and to the local control system. Equipment with no MHJ connection shall only provide E-stop status to the local control system. [Section 7.3.9.1, BOD, ROIN: 1-40684, ROIN: 40-23262] [Section 11.12.5.3, ORD, ROIN: 8-8287]

Basis Discussion: E-stops are normally implemented by Programmable Electronic System (PES) dedicated for that purpose. For systems with safety instrumented functions, E-stops may also be implemented in conjunction with related safety instrumented systems (for example, using an existing PPJ controller).

There are no safety instrumented functions associated with LEH system.

Verification: Verification is expected to be achieved through:

Verif. Method	Verif. By	Plan	Notes/Comments
I	ENG	Review design to verify E-stops provide the appropriate status reporting and remain in a shutdown state until the circuit is physically reset.	
D	SU/ COM	Demonstrate E-stops reporting and reset functions.	

3.7.4.4 Accessibility for Calibration, Testing, and Inspection

Requirement: The LEH system design shall provide the capability to access and perform calibration, periodic functional testing, and inspections of equipment and components during normal operation in areas where personnel exposure are ALARA. [Sections 6.7, 8.1.2, 9.12, 12.6.3, BOD, ROIN: 1-40577, ROIN: 1-40729, ROIN: 1-41030, ROIN: 1-41328] [Sections 9.1, 11.16, ORD, ROIN: 8-4345, ROIN: 8-4346, ROIN: 8-10056]

Basis Discussion: None. [ALARA]

Verification: Verification is expected to be achieved through:

Verif. Method	Verif. By	Plan	Notes/Comments
I	ENG	Review design to verify configurations that facilitate replacement and removal, or calibration, of equipment in areas where personnel exposure are ALARA.	Document in an evaluation/assessment. Plant Engineering or Ops to participate in the evaluation/assessment.

3.8 Relevant Codes and Standards

3.8.1 Codes of Record

Table 3-1 identifies relevant external codes and standards applicable to the LEH design. These are selected from those documents that comprise the Code of Record (COR) as established in 24590-WTP-RPT-ENG-01-001, Technical Baseline Description, i.e., the WTP Contract, the Basis of Design (BOD). Use of these documents is typically invoked in the design process through the documents identified in Section 3.9.2. Beyond inclusion here, no attempt is made in this document to extract individual design requirements from these documents for allocation to SSCs.

In some cases the expected means of verification may be established on the basis of tests or other criteria required by the codes and standards. This does not necessarily include verification or testing more appropriately defined in the procurement of individual sub-systems or components, or which is a routine activity defined by specifications and/or procedures used by construction and startup.

Table 3-1 LEH Applicable Codes & Standards

Implementing Codes and Standards: [Contract No. DE-AC27-01RV14136, WTP Contract]
• Not applicable
Implementing Codes and Standards: [24590-WTP-DB-ENG-01-001, Rev 2, Basis Of Design]
• 29 CFR 1910, *Occupational Safety and Health Standards*
• ANSI N14.6, *Radioactive Materials Special Lifting Devices for Shipping Containers Weighing 10.000 Pounds*
• ASME B30.2, *Overhead and Gantry Cranes (Top Running Bridge, Single or Multiple Girder, Top Running Trolley Hoist)*
• ASME B30.16, *Overhead Hoists (Underhung Cranes)*
• ASME NUM 1-2000, Rules for Construction of Cranes, Monorails, and Hoists (With Bridge or Trolley or Hoist of the Underhung Type)
• AWS D1.1, *Structural Welding Code - Steel*
• AWS D1.6, *Structural Welding Code - Stainless Steel*
• CMAA 70-2000, *Specifications for Top Running Bridge and Gantry Type Multiple Girder Electric Overhead Traveling Cranes*
• WAC 173-303, *Washington Administrative Code - Dangerous Waste Regulations*

3.8.2 WTP Design Criteria, Design Guides, and General Specifications

Table 3-2 identifies relevant discipline design criteria, guides, and general specifications applicable to the LEH system. Use of these documents to develop the detailed design of SSCs is governed by engineering procedures. The majority of requirements contained within these documents are derived from external codes and standards or are specified methods and approaches to achieve standardization and consistency of design. Beyond inclusion here, no attempt is made in this document to extract individual design requirements from these documents for tracing and verification, or to define how direction provided by these documents is applicable and allocated (or not) to individual SSCs.

Table 3-2 WTP Design Criteria, Guides, and General Specifications Applicable to LEH

Document Number	Title
Design Criteria Documents:	
24590-WTP-DC-M-06-001	*Mechanical Systems Design Criteria*
24590-WTP-DC-E-01-001	*Electrical Design Criteria*
24590-WTP-DC-ENG-06-001	*Design Criteria for Environmental and Natural Phenomena Hazard Qualification of Structures Systems and Components*
24590-WTP-DC-ST-04-001	*Seismic Analysis and Design Criteria*
Design Guides:	
24590-WTP-GPG-ENG-033	*Evaluation for Seismic Interaction Effects*

24590-WTP-GPG-ENG-086	*Equipment Environmental Qualification*
24590-WTP-GPG-ENG-0099	*Design Verification of Plant Design Deliverables*
24590-WTP-GPG-ENG-0103	*Equipment Seismic Qualification*
24590-WTP-GPG-ENG-0109	*Accessibility Review of Equipment and Components*
24590-WTP-GPG-ENG-0141	*WTP Radiation Damage Thresholds for Non-Metallic Materials*
24590-WTP-GPG-ENG-0150	*Plant Design/Mechanical Systems Equipment Interfaces: Terminal End Equipment*
24590-WTP-GPG-ENG-0159	*Single Failure Analysis Process for Mechanical, HVAC, and Control Systems*
24590-WTP-GPG-J-005	*Control Systems Interfaces*
24590-WTP-GPG-J-014	*Control Systems Design Process Guide*
24590-WTP-GPG-J-017	*WTP Seismic Category Application to C&I Systems*
24590-WTP-GPG-J-0057	*Setpoint Calculations*
24590-WTP-GPG-M-036	*Determining Quality Level and Seismic Category Classification of Sub-Components, Assemblies, Sub-Assemblies, and Parts*
24590-WTP-GPG-M-052	*Specifying Design Cycles for Equipment and Piping*
24590-WTP-GPG-PL-002	*Plant Design Material Control Guide*
24590-WTP-GPG-SRAD-001	*Design Guide for ALARA*
Specifications:	
24590-WTP-3PS-EEC0-T0003	*Engineering Specification for Local Operator Interface Workstation*
24590-WTP-3PS-FB01-T0001	*Engineering Specification for Structural Design Loads for Seismic Category III & IV Equipment and Tanks*
24590-WTP-3PS-JQ00-T0004	*Engineering Specification for Management of Supplier Software*
24590-WTP-3PS-JQ07-T0001	*Engineering Specification for Instrumentation for Packaged System*
24590-WTP-3PS-JQ08-T0001	*Engineering Specification for Construction and Installation of Controls and Instrumentation*
24590-LAW-3PS-MJKG-T0001	*Top Running Overhead Process Cranes - LAW*
24590-WTP-3PS-MJKH-T0001	*Engineering Specification for Commercial Quality Monorail Hoists, Jib Cranes, and Under-Running Single Girder Cranes*
24590-WTP-3PS-MQL0-T0003	*Engineering Specification for Special Grapples and Lifting Devices*
24590-LAW-3PS-MX00-T0002	*Engineering Specification for LAW Shielded Personnel Access Doors*
24590-WTP-3PS-ADRC-T0001	*Engineering Specification for Vertical and Horizontal Coiling Doors 08331*

4 System Description

The LAW LEH System provides mechanical handling equipment to remove filled and sealed LAW product containers from LAW LFH System and place the container on TFC supplied transport vehicles. The LEH provides maintenance facilities and equipment for the system LEH production equipment.

4.1 Configuration Information

The LEH System is part of the LAW Facility located on the east face of the facility. The physical boundaries of System LEH are the Export High Bay (L-0127) and the Export Office (L-0127A). The Export High Bay provides an environmental controlled space to transfer ILAW product containers from System LFH to an awaiting ILAW transport container secured to a TFC transport vehicle. The equipment, encompassed by System LEH, does not perform safety functions. The equipment is designed to implement operational and ALARA requirements.

4.1.1 Description of System, Subsystems, and Major Components

4.1.1.1 Description of Mechanical Handling Equipment

All equipment supporting LEH operations has a design life of 40 years in the specified environment and to withstand the hands-on decontamination process without degradation or loss of functionality.

4.1.1.1.1 Export High Bay Crane

Plant Item Number: 24590-LAW-MJ-LEH-CRN-00003

Refer to:
24590-CM-POA-MJKG-00003-08-00036, Drawing – General Arrangement LEH Container Storage Crane

24590-CM-POA-MJKG-00003-17-00007, Manual – Operating Manual Instruction LEH Container Storage Crane

24590-CM-POA-MJKG-00003-17-00008, Manual – Maintenance Manual Instructions – LEH Container Storage Crane

24590-LAW-3PS-MJKG-T0001, Engineering Specification for Top Running, Overhead Process Cranes – Low-Activity Waste Vitrification Facility

24590-LAW-M0D-LEH-00014, 24590-LAW-MJ-LEH-CRN-00003 – LEH Crane Export High Bay with Recovery, 10 Ton

The Export High Bay Bridge crane provides dedicated lifting capabilities in the Export High Bay (L-0127) for an ILAW product container. The crane has a rated capacity of 10 tons with a service class defined by Crane Manufactures Association of America CMAA-70, Class D – Heavy Service. The crane has a maximum lift height of 31'-0" which can accommodate the container grapple, ILAW product container, and the height of the TFC transport vehicle (includes ILAW transport container). The crane hoist brakes activate upon loss/removal of power.

The Export High Bay Bridge crane is controlled remotely using the Integrated Control Network (ICN) in combination with the crane mounted cameras and lighting. Local operations are accomplished through the use of the operating controls located on the doors LEH-PNL-00005, accessible via the Export Crane Maintenance Platform (LP0127).

The Export High Bay Bridge crane has redundant recovery features that enable it to operate the grapple to release the container, and transfer the crane to the Export Crane Maintenance Platform (LP0127). Repairs are performed from platform LP0127 and/or the crane mounted platforms.

4.1.1.1.2 Export Maintenance Jib Crane

Plant Item Number: 24590-LAW-MJ-LEH-CRN-00005
24590-LAW-MJ-LEH-CRN-00006

Refer to:
24590-CM-POA-MJKH-00002-01-00024, Drawing – 5 Ton Wall Mounted Cantilevered Jib Crane #2860 General Arrangement.

24590-CM-POA-MJKH-00002-01-00025, Drawing – 5 Ton Wall Mounted Cantilevered Jib Crane #2861 General Arrangement.

The Export Maintenance Jib Cranes, 24590-LAW-MJ-LEH-CRN-00005 and 24590-LAW-MJ-LEH-CRN-00006, provide lifting capabilities for maintaining the Export High Bay Bridge Crane (24590-LAW-MJ-LEH-CRN-00003). The jib cranes have a design capacity of 5 tons each, however they have been de-rated to 1.75 Tons due to embed loading calculations (see CCN 193692). The hoists are electric wire rope hoists with a duty class defined by American Society of Mechanical Engineers ASME HST-1, Hoist Duty Class H3. The jib cranes are Service Class C, per ASME NUM-1, Section NUM-B-1100-1. The jib cranes are controlled from the maintenance platform manually using push button pendants supplied with the equipment. The hoist brakes activate upon loss/ removal of power.

4.1.1.1.3 Export Container Grapple

Plant Item Number: 24590-LAW-FH-LEH-TOOL-00002

Refer to:
24590-QL-POA-FH00-00001-03-00009, Drawing – LAW Container Grapple – Grapple Arrangement.

The Export Container Grapple is a purpose built lifting device that provides an interface between the Export High Bay Bridge Crane and the LAW product container. The grapple is bolted to the crane load block in place of the hook. This is required for clearance over the system LFH trap door. The grapple assembly does not exceed the container diameter when in the disengaged configuration. The WTP Contract, specification 2.2.2.4, states the maximum weight of the product container is not to exceed 10,000 kg (22,046 lbs.).The calculated weight (see 24590-LAW-M0C-LRH-00004) of the filled ILAW container is less than 15000 lbs. The grapple assembly has a rated capacity of 16,500 lbs. which exceeds the calculated weight of the ILAW container, and the export high bay bridge has a rated capacity of 10 tons.

4.1.1.1.4 Container Grapple Stand

Plant Item Number: 24590- LAW-MH-LEH-MHAN-00002

Refer to:
24590-QL-POA-FH00-00001-03-00002, Drawing – LAW Container Grapple – Grapple Stand Arrangement.

A grapple stand is provided in the Export High Bay (L-0127) for storing the Export Container Grapple when not deployed on the Export High Bay Crane. The grapple stand may also be used to perform maintenance and inspections on the grapple assembly. The grapple stand is located in the North-West corner of Room L-0127 at the 0'-0" elevation.

4.1.1.2 Description of Shielded Doors

4.1.1.2.1 Export High Bay Shielded Personnel Access Doors

Plant Item Number: 24590-LAW-AD-LEH-DOOR-00007

Refer to:
24590-CM-POA-ADDH-00005-06-00240, Drawing – Right Hand 6 Inch Shielded Access Door Assembly.

A single SPAD is provided in the Export High Bay to facilitate maintenance in System LFH. The SPAD provides access to the North Finishing Line Monitoring/Export Area (L-0109E). The SPAD provides shielding to operating personnel, in the Export High Bay (L-0127), from ILAW product containers awaiting export from system LFH. The SPAD design incorporates features to aid in decontamination without degradation. The SPAD is controlled administratively.

4.1.1.2.2 Export High Bay Office Shielded Personnel Access Doors

Plant Item Number: 24590-LAW-AD-LEH-DOOR-00005

Refer to:
24590-CM-POA-ADDH-00005-06-00236, Drawing – Left Hand 6 Inch Shielded Assess Door Assembly.

A single SPAD is provided in the Export High Bay Office (L-0127A) to facilitate maintenance in System LFH. The SPAD provides access to the South Finishing Line Monitoring/Export Area (L-0115E). The SPAD provides shielding to operating personnel in the Export High Bay Office, from ILAW product containers awaiting export from System LFH Monitoring/Export Area. The SPAD design incorporates features to aid in decontamination without degradation. The SPAD is controlled administratively.

4.1.2 Boundaries and Interfaces

System LEH interfaces with the following systems:

- System LFH
- System LRH
- System PTJ

- TFC Transport Vehicle

4.1.2.1 System LFH – LAW Container Finishing Handling

ILAW product containers are exported from System LFH into System LEH.

ILAW product containers are sealed, decontaminated, and contamination levels are verified prior to being transferred to the finishing line monitoring/export area (L-0109E / L-0115E) of System LFH. Two trap doors (24590-LAW-AD-LFH-DOOR-00002 and 24590-LAW-AD-LFH-DOOR-00018) are mounted on the ceiling of the monitoring/export areas and separate System LFH and System LEH. System LFH provides gamma monitors at the export locations that will prevent the hatches from opening if the container does not meet the export criteria for the external surface of the ILAW product container not to exceed 500 mrem/hr. (24590-WTP-ICD-MG-01-015). One of the trap doors is opened allowing the System LEH Export Container Grapple, suspended from the Export High Bay Crane, to lower and engage the ILAW product container located in the finishing line monitoring/export area (L-0109E / L-0115E). The container is then raised into the Export High Bay (L-0127) to complete the transition from System LFH to System LEH.

4.1.2.2 System LRH – LAW Container Receipt Handling

System LRH defines the ILAW product container physical characteristics for interfacing with the System LEH grapple.

4.1.2.3 System PTJ – Process Plus Mechanical Handling CCTV (PTJ)

System PTJ provides a multi-camera system that is mounted to the Export High Bay Crane to observe remote operations. The camera tag numbers are: PTJ-XT-2161, PTJ-XT-2162, and PTJ-XT-2163.

4.1.2.4 Tank Farm Contractor Transport Vehicle

Although not an RPP-WTP system, System LEH has an interface with the TFC transport vehicle. The transport vehicle is designed, purchased, supplied, and operated by the TFC (24590-WTP-ICD-MG-01-015). The design of the TFC transport vehicle is unknown at this time. The TFC transport vehicle must be able to pass through rollup doors, L-0127-2 (north wall of Export High Bay) and L-0127-3 (south wall of Export High Bay). The rollup doors have an approximate dimension of 14ft W X 20ft H (24590-LAW-AD-A18T-05101002). The TFC transport vehicle also must be able to receive the ILAW product container and provide shielding to ALARA levels. The TFC transport vehicle and shielding container is limited to 17'-0" overall height to allow sufficient clearance for the crane, grapple, and ILAW product container. The shielding container must also allow for disengagement of the LAW grapple assembly which is approximately 4'-0" in diameter (24590-LAW-M0-20-00005).

4.1.3 Physical Layout and Location

4.1.3.1 Export High Bay (L-0127)

The Export High Bay is located at the east side of the LAW facility at elevation 0'-0" (24590-LAW-P1-P01T-00002). The Export High Bay is a concrete structure that provides separation from System LFH and

provides passive shielding to the co-located worker and the public. The wall adjacent to the Export Office (L-0127A) is extended vertically to provide radiological protection to the Export Office (L-0127A). The area is protected by a fire sprinkler system as shown on 24590-CM-HC1-PY21-00002-10-00013.

The Export High Bay contains a crane maintenance platform (LP-0127) at elevation 31'-8 1/4" to support crane maintenance activities. The maintenance platform extends the entire width of the space and is accessed by ladder. The platform provides access to the Export High Bay Crane (24590-LAW-MJ-LEH-CRN-00003) for manual control, inspection, and maintenance. Two jib cranes (24590-LAW-MJ-LEH-CRN-00005, 24590-LAW-MJ-LEH-CRN-00006) are provided to support removal and replacement of the export high bay crane components.

The Export High Bay provides an entrance and an exit for the TFC transport vehicle. Access for the TFC transport vehicle is provided by 14ft W X 20ft H roll-up doors on the North (L-0127-2) and South (L-0127-3) walls. The export high bay also provides access to the System LFH North Container Monitoring/ Export Area (Room L-0109E) via a SPAD (24590-LAW-AD-LEH-DOOR-00007), and access to the export office is provided via an architectural door (L-0127A1). Exits are provided in accordance with the life safety code (NFPA 101).

The Export High Bay room is designated as a R5/R2/C1 area. The room is only designated R5 during container transfers from System LFH to the ILAW transport container. The container is transferred to the export high bay after it's been surveyed to meet contamination levels per the Radiological Control Manual.

Figure 4–1 Room L-0127 Plan and Section Views

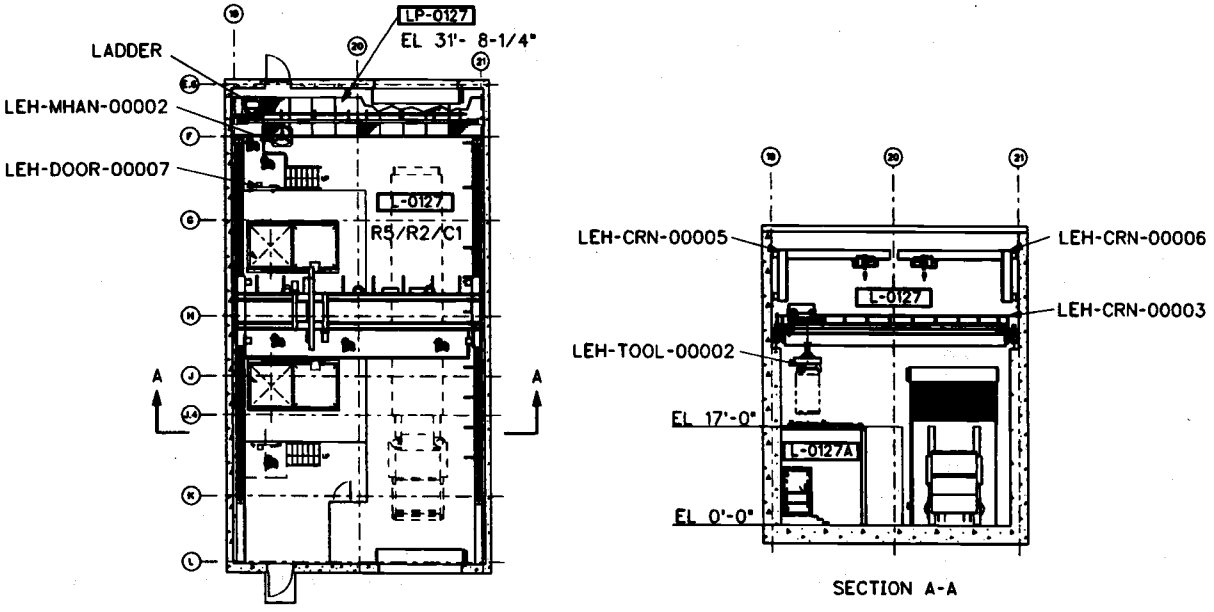

4.1.3.2 Export Office (L-0127A)

This area is located in the south west quadrant of the Export High Bay at elevation 0'-0". The office provides shielding for operation personnel during container transfers from System LFH to the TFC transport vehicle. The export office provides access to the System LFH South Container Monitoring/ Export Area (Room L-0115E) via a SPAD (24590-LAW-AD-LEH-DOOR-00005), and access to the export high bay is provided via an architectural door (L-0127A1). Exits are provided in accordance with the life safety code. The Export Office is designated as a R2/C1 area.

Figure 4–2 Room L-0127A Plan View EL. 0'-0"

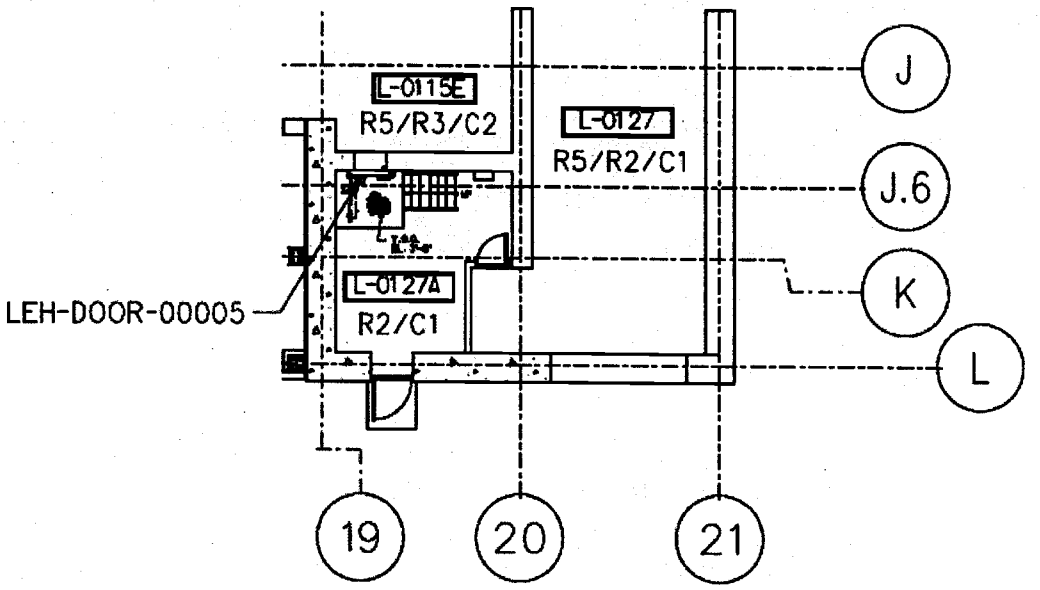

4.1.4 Principles of Operation

Operations in the Export High Bay are conducted in a manner that meets ALARA principles. The primary function, transferring a container from System LFH to the TFC transport vehicle, is conducted remotely due to radiation hazard presented by the ILAW product container. Personnel access to the Export High Bay is restricted during the container transfer operation. All other tasks are conducted locally when the ILAW product container is not present or shielded by the ILAW transport container.

The following sections contain proposed operational methodology to transfer ILAW containers from System LFH to the TFC transport vehicle.

4.1.4.1 Receive Empty ILAW Transport Containers on TFC Transport Vehicle

Upon TFC transport vehicle arrival, operating personnel confirms the status of the Export High Bay (Room L-0127). No filled ILAW product containers are present and contamination levels meet the C1 criteria. The operator ensures that the TFC transport vehicle is acceptable (i.e. radiological survey, fluid leaks, etc.) for entry into the Export High Bay. The operator opens the rollup door (L-0127-2) and the TFC transport vehicle enters the facility. The TFC transport vehicle is powered down and put in a safe state. The rollup door is closed and secured.

4.1.4.2 Prepare TFC Transport Vehicle for Loading

Operators prepare the TFC transport vehicle, to receive ILAW product container in the Export High Bay (L-0127). Preparation of the TFC transport vehicle will be determined based on the design. The Export High Bay only provides crane coverage for performing preparation activities

4.1.4.3 Transfer LAW Product Container to TFC Transport Vehicle

Personnel exit the Export High Bay (L-0127) before the ILAW product container loading operation commences. The Export Office (L-0127A) is shielded and provides an area for personnel to congregate and prepare necessary export documentation. Access to the Export High Bay is administratively controlled.

Operators verify that a container is ready for export from System LFH. In System LFH, the ILAW product container is sealed, decontaminated, and a smear sample is taken to verify that radiological control limits are met. In addition, System LFH moves the ILAW product container into either room L-0115E or L-0109E, dependent on which finishing line is ready. For detailed information reference System Design Description for System LFH, LAW Container Finishing Handling System (24590-LAW-3ZD-LFH-00001).

The following is a summary of actions necessary to complete transfer of the ILAW product container to the TFC transport vehicle:

- Determine which finishing line is prepared for ILAW product container export.
- Transfer Export High Bay Crane with Export Container Grapple to the appropriate trap door location.
- Verify all personnel have exited the Export High Bay (L-0127).
- Open trap door.
- Lower grapple into System LFH monitoring/export area (L-0115E, L0109E) and engage the ILAW product container.
- Raise ILAW product container to transfer height.
- Close trap door.
- Transfer ILAW product container to the TFC transport vehicle.
- Lowers ILAW product container into ILAW transport container on TFC transport vehicle and disengage the grapple.
- Raise grapple to crane transport height.

4.1.4.4 Prepare TFC Transport Vehicle for Shipment

The ILAW transport container provides shielding of the ILAW product container(s) to allow operations personnel to re-enter the Export High Bay (L-0127). As needed, the operations personnel perform actions necessary to secure the ILAW transport container for transfer to the disposal site. The Export High Bay

Crane and grapple assembly are available for completing the tasks. Prior to transporting the container out of the export high bay, a radiological release survey is performed on the TFC transport vehicle.

4.1.4.5 Release TFC Container Transport Vehicle from LAW Facility

The TFC transport vehicle is evaluated to confirm that it meets the transport criteria (established by others). Operators verify Export High Bay is in a state that the roll-up doors can be opened. Operators open roll-up door (L-0127-3) to allow TFC transport vehicle to exit the facility. Operator closes roll-up door once TFC transport vehicle clears the building opening.

Additional discussion of system operations is provided in section 4.2.

4.1.5 System Reliability Features

RESERVED

4.1.6 System Control Features

The LEH system, as a whole, has no integrated controls and hence no specific startup routines. Each item of MHJ controlled mechanical equipment (i.e., 24590-LAW-MJ-LEH-CRN-00003) is operated autonomously from the operator interface with each movement being operator initiated.

The export high bay bridge crane is controlled by the MHJ from the LAW facility control room or manually through the control panels accessed on platform LP0127 in the Export High Bay (L-0127). The crane operator in the control room observes the operations via video equipment and lighting provided on the crane. The MHJ is programmed to locate the crane at each System LFH hatch location and avoid container collisions with the extended height wall (passive shielding design feature). Raising and lowering of the hoist is controlled by operations personnel.

Non-MHJ crane operations for the export high bay bridge crane are described in the following document:

- 24590-CM-POA-MJKG-00003-17-00007, Manual – Operating Manual Instruction LEH Container Storage Crane

The MHJ is programmed to perform crane functions, as described in the Software Document and the System LEH Mechanical Sequence Diagram (MSD). Refer to the MSD for permissive and interlock instrumentation controls.

- 24590-CM-POA-MJKG-00003-11-00002, Software Document – LEH Export Handling Crane

- 24590-LAW-M1-LEH-00001, Mechanical Sequence Diagram (MSD) for LAW Vitrification System LEH MSD Detailing LAW Export Handling

The jib cranes are locally operated from platform LP-0127. The jib is controlled by a standard commercial pendant. The jib cranes have a design capacity of 5 Tons, however they have been de-rated to 1.75 Tons due to embed loading (see CCN 193692).

Jib Crane operations are described in the following documents:

- 24590- CM-POA-MJKH-00002-10-00017, Manual – Operating, Parts & Maintenance Manual – 5 Ton Wall Mounted Cantilevered Jib Crane
- 24590- CM-POA-MJKH-00002-10-00018, Manual – Operating, Parts & Maintenance Manual – 5 Ton Wall Mounted Cantilevered Jib Crane

4.2 Operations

4.2.1 Initial Configuration (Pre-startup)

RESERVED

4.2.2 System Startup

RESERVED

4.2.3 Normal Operations

RESERVED

4.2.4 Off-Normal Operations

RESERVED

4.2.5 System Shutdown

RESERVED

4.2.6 Safety Management Programs and Administrative Controls

RESERVED

4.3 Testing and Maintenance

RESERVED

4.3.1 Temporary Configurations

RESERVED

4.3.2 TSR-Required Surveillances

RESERVED

4.3.3 Non-TSR Inspections and Testing

RESERVED

4.3.4 Maintenance

RESERVED

4.4 Supplemental Information

RESERVED

5 References and Design Documents List

5.1 Source / Basis References

Document Number	Rev	Title	Text Reference
24590-LAW-FHA-RAFP-FP-0001	1	Fire Hazards Analysis (FHA) for the Low-Activity Waste Facility (LAW)	FHA – LAW Facility
24590-WTP-DB-ENG-01-001	2	Basis of Design	BOD
24590-WTP-ICD-MG-01-015	3	ICD 15 - Interface Control Document for Immobilized Low-Activity Waste	ICD 15
24590-WTP-RPT-OP-01-001	5	Operations Requirements Document	ORD
24590-WTP-PSAR-ESH-01-002-03	5j	Preliminary Documented Safety Analysis to Support Construction Authorization; LAW Facility Specific Information	PDSA - LAW Facility
24590-WTP-SRD-ESH-01-001-02	7f	Safety Requirements Document, Volume II	SRD
DE-AC27-01RV14136	M339	DOE/BNI WTP Contract Mod No. 339, Section C - Statement of Work	WTP Contract

5.2 Other References

Document Number	Rev	Title
24590-WTP-3DP-G04B-00046	031	Engineering Drawings
24590-WTP-3PS-JQ00-T0004	001	Engineering Specification for Management of Supplier Software
DOE-STD-1020-94	N/A	Natural Phenomena Hazards Design and Evaluation Criteria for Department of Energy Facilities
DOE-STD-3024-2011	N/A	Content of System Design Descriptions
24590-WTP-GPP-SQP-208	03B	Plant Software Life Cycle Management
24590-WTP-GPG-ENG-033	002	Evaluation for Seismic Interaction Effects
24590-WTP-GPG-ENG-0161	000	Technical Requirements Management
24590-WTP-3DP-G04B-00004	003	Technical Requirements Management
24590-WTP-PL-RACT-RT-0001	000	WTP Remotability Verification Plan
24590-WTP-PSAR-ESH-01-002-01	5E	Preliminary Documented Safety Analysis to Support Construction Authorization; General Information

5.3 System Design Documents

Document Number	Title
MHDs	
24590-LAW-M7-LEH-00002001	LAW Vitrification System LEH Mechanical Handling Diagram Container Export Handling System
24590-LAW-M7-LEH-00002002	LAW Vitrification System LEH Mechanical Handling Diagram Container Export Handling System
24590-LAW-M7-LEH-00002003	LAW Vitrification System LEH Mechanical Handling Diagram Container Export Handling System
24590-LAW-M7-LEH-00002004	LAW Vitrification System LEH Mechanical Handling Diagram Container Export Handling Panel I/O
General Arrangement/Equipment Location Drawings	**Title**
24590-LAW-P1-P01T-00002	LAW Vitrification Building General Arrangement PLAN at EL. 3'-0"
24590-LAW-P1-P01T-00003	LAW Vitrification Building General Arrangement PLAN at EL. 22'-0"
24590-LAW-P1-P01T-00004	LAW Vitrification Building General Arrangement PLAN at EL. 28'-0"
24590-LAW-P1-P23T-00021	LAW Vitrification Building Equipment Location PLAN EL. 3'-0"/ Area 14
24590-LAW-P1-P23T-00026	LAW Vitrification Building Equipment Location PLAN EL. 3'-0"/ Area 19
24590-LAW-P1-P23T-00036	LAW Vitrification Building Equipment Location PLAN EL. 22'-0"/ Area 10
24590-LAW-P1-P23T-00047	LAW Vitrification Building Equipment Location PLAN EL. 28'-0"/ Area 10
24590-LAW-A1-A10T-01201005	LAW Vitrification Building Architectural Door Schedule EL 3'-0" Zone 5
24590-LAW-AD-A18T-05101002	LAW Vitrification Building Architectural Door Schedule EL 0'-0" & 3'-0"

Appendix A Test Objectives, Conditions, and Acceptance Criteria

NOTE: Demonstrations and Tests identified in this appendix are preliminary, pending completion of design activities. They are established to document the flow down of verification needs established in Section 3 but are not sufficiently detailed for development of specific system and equipment test plans. They may be used for general planning only. This note is to be removed when design is sufficiently progressed to provide the details needed to establish the basis for testing and acceptance criteria. **[HOLD]**

Requirement (para #)	Test (T) or Demo (D)	COM or SU	Plan (including SSCs)**	Acceptance Criteria (TAC or GTC)*	Notes/Comments	Test Conditions
3.4.4.3	D	SU/COM	• Demonstrate that the cameras provide adequate viewing to perform required remote LEH handling operation. CCTV Camera, CTNs: PTJ-XT-2161, PTJ-XT-2162, PTJ-XT-2163, PTJ-XT-2076, and PTJ-XT-2053	**(GTC)** The CCTV cameras provide adequate viewing and container transfer can be performed remotely by using CCTV cameras.		
3.4.4.4	D	SU/COM	• Demonstrate operation of remotely operated LEH equipment from remote operator interfaces using CCTV monitor.	**(GTC)** Physical demonstration.		
3.5.3.1	T	SU/COM	Measure illumination levels below the Export High Bay cranes to verify lighting complies with IESNA Standard.	**(TAC)** The lighting below the Export High Bay cranes complies with IESNA Standard.		
3.5.4.3	D	SU/COM	Demonstrate that crane brakes engage with a loss of power. Cranes CTNs: LEH-CRN-00003, LEH-CRN-00005, and LEH-CRN-00006.	The crane brakes engage when the power is off.		
3.5.4.6	D	SU/COM	Demonstrate the recovery of the Export High Bay Crane in accordance with 24590-WTP-PL-RACT-RT-0001, Remotability Verification Plan. • Export High Bay Bridge Crane, CTN: LEH-CRN-00003	**(GTC)** The crane is successfully recovered to the crane maintenance area.		Crane power supply disconnected.
3.7.4.2	D	SU/COM	Demonstrate the operation of emergency stops for the following equipment: • Export High Bay Bridge Crane, CTN: LEH-CRN -00003 • Export Maintenance Jib Cranes, CTNs: LEH-CRN -00005 and LEH-CRN -00006	**(GTC)** Emergency stop removes all power to the equipment immediately, causing all equipment motion to stop.		
3.7.4.3	D	SU/COM	Demonstrate that the following LEH equipment emergency stop statuses are reported to the MHJ and/or local control panel and that the parent equipment remains in a shutdown state until its circuit is physically reset: • Export High Bay Bridge Crane, CTN: LEH-CRN-00003 • Export Maintenance Jib Cranes, CTNs: LEH-CRN-00005 and LEH-CRN-00006	**(GTC)** Equipment e-stop signals are displayed through the MHJ and/or local control panel. **(GTC)** Parent equipment remains in shutdown until its e-stop circuit is reset.		

Requirement (para #)	Test (T) or Demo (D)	COM or SU	Plan (including SSCs)**	Acceptance Criteria (TAC or GTC)*	Notes/Comments	Test Conditions
3.7.1.1	D	SU/COM	Demonstrate remote control of the following equipment using MHJ: • Export High Bay Bridge Crane, CTNs: LEH-CRN-00003	(GTC) LEH-CRN-00003 can be operated via MHJ and manually from panels accessed from platform LP0127.		MHJ operating and monitoring
3.7.1.3	D	SU/COM	Demonstrate the operability of local/maintenance mode features and functions during operation from the local control panels or pendants of the following equipment: • Export High Bay Export Crane, CTN: LEH-CRN-00003 • Export Maintenance Jib Cranes, CTNs: LEH-CRN-00005, LEH-CRN-00006	(GTC) Check operation of cranes from local control panels.		

Notes:
*Test Acceptance Criteria (TAC) are based on requirements from authorization basis documents. General Test Criteria (GTC) are requirements from other sources.
**Any non-safety related anomalies or issues experienced during the execution of a test or demonstration plan to validate a requirement can be put on [HOLD] until the issue has been resolved.

Appendix B Descriptions of System Functional Flow and Interactions

Function: A	Place ILAW Product Container
Detailed description: Transport vehicle brings an empty transport container. ILAW product container is inserted inside the transport container and it is taken to the disposal site.	
Initiation: This function initiates when an ILAW product container is available in the Truck Bay for disposal.	
Termination: This function terminates when the product container is placed inside the transport container.	
Parallel or sequential functions: None	
Applicable modes: Normal operation	

Function: B.1	Retrieve ILAW Product Container
Detailed description: When a decontaminated ILAW product container is available in LFH system Export area, the operator opens the appropriate trap door, lowers and engages the grapple to the product container. The product container is raised to transfer height by using Export High Bay Crane.	
Initiation: This function initiates when a product container is available in LFH export area.	
Termination: This function terminates when the product container is removed from LFH export area.	
Parallel or sequential functions: None.	
Applicable modes: Normal operation	

Function: B.2	Move ILAW Product Container
Detailed description: The product container is moved by the Export High Bay Crane near the transport vehicle.	
Initiation: This function initiates when the product container is moved by the Export High Bay Crane.	
Termination: This function terminates when the product container is brought near the transport vehicle.	
Parallel or sequential functions: None.	
Applicable modes: Normal operation	

Function: B.3	Position Product container
Detailed description: The operator positions the product container above the transport container for insertion.	
Initiation: This function initiates when the product container is positioned above the product container.	
Termination: This function terminates when the product container is inserted inside the transport container.	
Parallel or sequential functions: None.	
Applicable modes: Normal operation	

Function: C.1	Lighting for Transfer Activities
Detailed description: Lighting is provided by lights mounted on the Export High Bay Crane.	
Initiation: This function initiates when the product container is picked up from LFH export area.	
Termination: This function terminates when the product container transfer is completed.	
Parallel or sequential functions: None.	
Applicable modes: Normal operation	

Function: D.1	AC Power Supply
Detailed description: The low voltage electrical (LVE) power is supplied to operate the crane, hoist and grapple. Power is also supplied to CCTV cameras, local control panels.	
Initiation: There is no initiation for this function. Electrical power is always available.	
Termination: This function has no termination.	
Parallel or sequential functions: N/A	
Applicable modes: Normal operation	

Function: E.1	Remote Viewing
Detailed description: Color cameras are mounted on the Export Bay Crane. The product container transfer operation is viewed remotely via CCTV.	
Initiation: The function initiates when the cameras are turned on.	
Termination: This function terminates the cameras are turned off.	
Parallel or sequential functions: None.	
Applicable modes: Normal operation	

Function: F.1	Mechanical Handling Monitoring and Control
Detailed description: The Mechanical Handling and Control System (MHJ) provides control and monitoring of the Export High Bay Crane from the LAW Facility Control Room.	
Initiation: This function initiates when there is a need to operate the crane from the control room. (The crane can also be operated from the local control panels in the Truck Bay.)	
Termination: None.	
Parallel or sequential functions: N/A	
Applicable modes: Normal operation or optional operation.	

Appendix C Active Safety Instruments and Functions

There are no active safety instruments in system LEH.

Appendix D Reserved – System Procedures

Appendix E Reserved - System History

Issued by
RPP-WTP PDC

LAW Container Finishing Handling (LFH) System Design Description

Document title:	LAW Container Finishing Handling (LFH) System Design Description
Document number:	24590-LAW-3ZD-LFH-00001
Revision number:	0
Type:	☑ System Design Description ☐ Facility Design Description
Originator(s):	Matt Kulp
Checked by:	Neil Darwen
Checker's signature:	Signature — Date: 7/23/15
Concurrence:	~~Mark Johnson~~ Jeremy Wilkins 8/5/15
Concurrence signature:	Manager of Production Engineering Signature — Date: 8/5/15
Concurrence:	Ian Milgate
Concurrence signature:	Project Technical Director and Design Authority Signature — Date: 8/6/15
Approved by:	Natalie Harkey
Approver's position:	Systems Engineering Manager
Approver's signature:	Signature — Date: 8/6/2015

Validation

Appl.	Requirement Area	Requirement Developer	Signature	Date
☐	Architectural Design			
☐	Civil/Structural Design			
☑	Controls & Instrumentation Design	WAYNE UNDERHILL	[signature]	7/13/15
☐	Electrical Design & AHJ			
☐	Fire Protection Engineering			
☑	HVAC Design	JULIAN LEAM	[signature]	07.21.15 R 8/5/15
☑	Mechanical Handling Design	JULIAN LEAM	[signature]	07.21.15 R 8/5/15
☑	Mechanical Systems Design	JULIAN LEAM	[signature]	07.21.15 R 8/5/15
☑	Plant Design	John Schuette	[signature]	7-13-15
☑	Process Engineering	McKulp for Bob Voke per email	[signature]	7-16-15
☐	Interface (External)			
☐	Interface (Internal)			
☑	System Functions and Requirements	NEIL J DARWEN	[signature]	7-23-15
☑	Equipment Environmental Qualification	GOVIND RAJAGOPAL	G. Rajagopal	7-14-15
☐	Materials Engineering / Technology			
☐	Plant Software Design			
☐	Environmental Protection			
☑	Nuclear Safety Engineering	Robert Birchenough	Robert Birchenough	7-14-2015
☐	Criticality Safety			
☑	Radiological Engineering	[signature] for RUSSELL G. LAUSEN	[signature]	7/16/15
☐	Industrial Safety/Hygiene (ESH)			
☑	Mission (WTP Contract functional/performance rqmts)	EAWinkelman	EAW	7/13/15
☑	Operations Requirements Document	[signature] RANDA DUNN	[signature]	7/15/15
☑	Quality Assurance	CC Albin	CC Albin	7/14/15
☐	Safeguards & Security			
☐	Startup			
☐	Transportation & Logistics			

* Validation not required for alpha/preliminary design description documents.

History Sheet

Rev	Reason for revision	Revised by
0	Initial issue. Supersedes 24590-LAW-3YD-LFH-00001, Rev 003, System Description for the LAW Container Finishing Handling System (LFH).	M. Kulp

Contents

Validation ii

History Sheet iii

1 Introduction 1

1.1 System Identification 1

1.2 Limitations and Scope 1

1.3 Ownership and Maintenance 2

1.4 Definitions/Glossary 2

1.5 Acronyms and System Designators 2
1.5.1 Acronyms 2
1.5.2 System Designators 3

2 General Overview 3

2.1 System Functions/Safety Functions 5

2.2 System Classification 9

2.3 Basic Operational Overview 9

3 Design Requirements 10

3.1 Requirements 10

3.2 Bases 11

3.3 References 11

3.4 General Requirements 11
3.4.1 Mission and Functional/Performance Requirements (Including States/Modes) 11
3.4.2 Nuclear Safety, ALARA, Environmental, and Other Regulatory Requirements 16
3.4.3 System Interface Requirements 16
3.4.4 Other Technical, Specialty, Operations, and Maintenance Requirements 16

3.5 Grapple Requirements 18

3.6 Crane and Hoist Requirements 18
3.6.1 Mission and Functional/Performance Requirements (incl. states/modes) 18
3.6.2 Nuclear Safety, ALARA, Environmental, and Other Regulatory Requirements 20
3.6.3 System Interface Requirements 21
3.6.4 Other Technical, Specialty, Operations, and Maintenance Requirements 21

3.7 Bogie Requirements 23
3.7.1 Mission and Functional/Performance Requirements (incl. states/modes) 23
3.7.2 Nuclear Safety, ALARA, Environmental, and Other Regulatory Requirements 24
3.7.3 System Interface Requirements 24
3.7.4 Other Technical, Specialty, Operations, and Maintenance Requirements 24

3.8 Master–Slave Manipulator Requirements 25
3.8.1 Mission and Functional / Performance Requirements (Including States/Modes) 25
3.8.2 Nuclear Safety, ALARA, Environmental, and Other Regulatory Requirements 26
3.8.3 System Interface Requirements 26
3.8.4 Other Technical, Specialty, Operations and Maintenance Requirements 26

3.9 Shield/Containment Door Requirements 27

3.9.1 Mission and Functional / Performance Requirements (Including States/Modes) 27
3.9.2 Nuclear Safety, ALARA, Environmental, and Other Regulatory Requirements 28
3.9.3 System Interface Requirements 28
3.9.4 Other Technical, Specialty, Operations and Maintenance Requirements 28

3.10 Monitoring and Controls Requirements 28
3.10.1 Mission and Functional/Performance Requirements (incl. states/modes) 28
3.10.2 Nuclear Safety, ALARA, Environmental, and Other Regulatory Requirements 30
3.10.3 System Interface Requirements 31
3.10.4 Other Technical, Specialty, Operations, and Maintenance Requirements 31

3.11 Other LFH Equipment Requirements 33
3.11.1 Mission and Functional / Performance Requirements (Including States/Modes) 33
3.11.2 Nuclear Safety, ALARA, Environmental, and Other Regulatory Requirements 34
3.11.3 System Interface Requirements 35
3.11.4 Other Technical, Specialty, Operations and Maintenance Requirements 35

3.12 Posting Ports and Gloveboxes 35
3.12.1 Mission and Functional/Performance Requirements 35
3.12.2 Nuclear Safety, ALARA, Environmental, and Other Regulatory Requirements 39
3.12.3 System Interface Requirements 39
3.12.4 Other Technical, Specialty, Operations, and Maintenance Requirements 39

3.13 Relevant Codes and Standards 39
3.13.1 Codes of Record 39
3.13.2 WTP Design Criteria, Design Guides, and General Specifications Applicable to LFH 40

4 System Description 41

4.1 Configuration Information 41
4.1.1 Description of System, Subsystems, and Major Components 43
4.1.2 Boundaries and Interfaces 94
4.1.3 Physical Layout and Location 94
4.1.4 Principles of Operation 101
4.1.5 System Reliability Features 102
4.1.6 System Control Features 103

4.2 Operations 107
4.2.1 Initial Configuration (Pre-startup) 107
4.2.2 System Startup 107
4.2.3 Normal Operations 107
4.2.4 Off-Normal Operations 107
4.2.5 System Shutdown 107
4.2.6 Safety Management Programs and Administrative Controls 107

4.3 Testing and Maintenance 107
4.3.1 Temporary Configurations 107
4.3.2 TSR-Required Surveillances 107
4.3.3 Non-TSR Inspections and Testing 107
4.3.4 Maintenance 107

4.4 Supplemental Information 107

5 References and Design Documents List 108

5.1 Source / Basis References 108

5.2 Other References 108

5.3 System Design Documents 108

Appendices

Appendix A Test Objectives, Conditions, and Acceptance Criteria A-1
Appendix B Descriptions of System Functional Flow and Interactions B-1
Appendix C Active Safety Instruments and Functions C-1
Appendix D System Procedures D-1
Appendix E System History E-1

Tables

Table 2-1 - Functional Analysis and Crosswalk to Requirements 7
Table 3-1 – LFH Applicable Codes & Standards 40
Table 3-2 – WTP Design Criteria, Design Guides, and General Specifications Applicable to LFH 40
Table 4-1 - System LFH Interfaces 94
Table 4-2 - System Monitoring Instrumentation 103
Table 4-3 - Packaged Equipment Local Controls 105

Figures

Figure 2-1– LFH Context Diagram 4
Figure 2-2– LFH Simplified Diagram 5
Figure 2-3 - LFH Functional Block Diagram 6
Figure 4-1 - LAW Finishing Line Simplified Diagram 43
Figure 4-2 - Shard Table 44
Figure 4-3 - Shard Tray 45
Figure 4-4 - Shard Pickup Assembly 46
Figure 4-5 - MSM Tool Tray 47
Figure 4-6 - Inert Fill Hopper 49
Figure 4-7 - Lid Press 52
Figure 4-8 - Lid Magazine 54
Figure 4-9 - Lid Press Parking Stand 56
Figure 4-10 - Lid Recovery Tool 57

Figure 4-11 - Seal Prep Tool 59
Figure 4-12 - Lidding Tool Tray 60
Figure 4-13 - Container Decontamination Zones 61
Figure 4-14 - Upper Decontamination Power Manipulator 62
Figure 4-15 - Lower Decontamination Power Manipulator 63
Figure 4-16 - Decontamination Turntable 64
Figure 4-17 - Decontamination Power Manipulator End-Effector 65
Figure 4-18 - Swabbing Power Manipulator 67
Figure 4-19 - Swabbing Bogie-Mounted Turntable 68
Figure 4-20 - Lidding Bogie 71
Figure 4-21 - Decontamination Bogie 72
Figure 4-22 - Swabbing Bogie 73
Figure 4-23 - Bogie Recovery System 75
Figure 4-24 - Dual-Rail Hoist 77
Figure 4-25 - System LFH Jib Crane 79
Figure 4-26 - Grapple 81
Figure 4-27 - Trap Door (plan view) 82
Figure 4-28 - Line Transfer Equipment Door 83
Figure 4-29 - Shielded or Containment Door (typical) 85
Figure 4-30 - Shield Window 87
Figure 4-31 - Master Slave Manipulator 89
Figure 4-32 - Posting Port 91
Figure 4-33 - Glovebox 92
Figure 4-34 - Plan View of System LFH at Elevation +3 ft 100

1 Introduction

1.1 System Identification

This system design description (SDD) defines the technical and functional/performance requirements of the low-activity waste (LAW) container finishing handling (LFH) system. The LFH receives a filled immobilized low-activity waste (ILAW) container from the LAW container pour cave handling (LPH) system and performs all functions required to render the container acceptable for export and subsequent burial. These functions include:

- Receipt of filled container from the LPH system
- Verifying absence of free liquids in the waste glass
- Determining product container fill level
- Sampling waste glass when required
- Adding inert fill if the container fill level is below contract minimum
- Installing a lid and seal to meet contract sealing requirements
- Decontaminating the entire container surface
- Swabbing/smearing the container to determine smearable contamination levels
- Monitoring container surface radiation dose rate
- Delivery to LAW container export system (LEH)

1.2 Limitations and Scope

The scope of this document is to provide an authoritative source for the collected set of requirements applicable to the LFH system, inclusive of interface requirements with other systems. The SDD is prepared in accordance with 24590-WTP-3DP-G04B-00093, *System and Facility Design Descriptions*. The intended use of these collected requirements is to establish the following:

- Inform the LFH system design effort
- Provide a validated basis upon which to confirm implementation of design requirements
- Provide the expected means of verification for requirements, including those that are post-construction (i.e., startup and commissioning test objectives and acceptance criteria)

All requirements established in this document are intended to be verified to be implemented in design and or physical configuration using a graded approach commensurate with importance and risk.

Where numeric values are provided within requirements in Section 3, these values are provided without additional margin. For example if a value is established in the Basis of Design, no attempt is made to remove any margin that may or may not have gone into the establishment of that value, neither has any margin been added. Where values are stated as minimums or maximums, there is no expectation that any additional margin be applied in the verifications that the design requirements have been met. Testing that is required to be performed in accordance with external codes and standards must follow the rules established in those documents.

This document is used in support of design development, design verification, turnover, startup testing, and commissioning activities. It is intended to be maintained current relative to changes to source requirements documents. Updates shall be made concurrent with changes to source requirements and implementation shall be tracked for completion in accordance with 24590-WTP-3DP-G04B-00004, *Technical Requirements Management.*

Impacts to design, test procedures, or other Project documentation resulting from changes to source requirements and/or this document shall be identified and resolved in accordance with 24590-WTP-3DP-G04B-00004 and 24590-WTP-3DP-G04T-00901, *Design Change Control.*

Engineers are expected to be able to use the requirements in section 3 of this document as input for design development without recourse to the upper-tier source documents or searches of the Technical Requirements Management System. Design engineers are still required to ensure that requirements contained with the discipline/functional standards incorporated by reference in section 3 are followed. These documents contain additional criteria that are based on applications of external codes/standards, corporate best practices, and engineering management expectations for a consistent approach to design. Section 4 of this document is currently reserved for future inclusion of contents related to system operations and maintenance. This further content will be provided consistent with expectations of DOE-STD-3024-2011, *Content of System Design Descriptions.*

Certain requirement statements in this document may be preceded by a "[HOLD]" notation. This notation is used when there are unresolved technical issues, known inconsistencies among source requirements, or other management suspensions of work requiring resolution. Requirements with the "[HOLD]" notation may be used to proceed with preliminary or committed design but shall not be used in support of fabrication or construction until the "[HOLD]" is removed.

The contents of Sections 4 are being developed in a phased approach in support of future operations and maintenance. At this revision, only the contents of Sections 4.1.1 through 4.1.4 and 4.1.6 have been updated and verified. Information in Sections 4.1.5, 4.2, 4.3 and 4.4 has been included in some cases to allow cancellation of, or removal of related content from, the associated System Description document, but may be incomplete and has not been verified to be up to date. Information will be updated in a later phase after the work has been completed to support completion of these sections. Additional Appendices may be added in the future as needed.

1.3 Ownership and Maintenance

The Design Authority organization is responsible for the preparation and maintenance of this document through turnover of the included systems to Operations. Thereinafter, maintenance of this document is the responsibility of the Plant Engineering organization; however, the Engineering Design Authority organization retains responsibility for the establishment and definition of design requirements.

1.4 Definitions/Glossary

None

1.5 Acronyms and System Designators

1.5.1 Acronyms

ALARA	As low as reasonably achievable
ANSI	American National Standard Institute
BOD	Basis of design
CCTV	Closed circuit television
CO_2	Carbon dioxide
CTN	Component tag number
DT	Distance transducer
HFE	Human factors engineering

HEPA	High efficiency particulate air filter
HMI	Human machine interface
HVAC	Heating, ventilating, and air conditioning
ICN	Integrated control network
ID	Inner diameter
ILAW	Immobilized low activity waste
ISA	Instrument service air
Lab	Analytical laboratory facility
LAW	Low-activity waste facility
LOI	Local operator interfaces
LVE	Low voltage electrical power
MH	Mechanical handling
MSD	Mechanical sequence diagram
MSM	Master slave manipulator
OD	Outer diameter
ORD	Operations requirement document
PDSA	Preliminary documented safety analysis
PSA	Plant service air
PTF	Pretreatment facility
SC	Safety Class
SC-I/II/III/IV	Seismic category 1/2/3/4
SDD	System design description
SPAD	Shielded personnel access door
SS	Safety Significant
SSC	Structure, system, or component
TAC	Test acceptance criteria
VFD	Variable frequency drive
WTP	Hanford Tank Waste Treatment and Immobilization Plant

1.5.2 System Designators

ASX	Autosampling system
C5V	C5 ventilation system
CDG	Carbon dioxide gas system
GFR	Glass former reagent system
LEH	LAW container export handling system
LFH	LAW container finishing handling system
LPH	LAW container pour handling system
LRH	LAW container receipt handling system
MHJ	Mechanical handling control system
PPJ	Programmable protection system
PTJ	Process and mechanical handling CCTV system

2 General Overview

The LFH system is composed of two mirror image finishing lines. ILAW product containers are received from the LPH system at the west end of LFH and are processed in the east direction. The containers are inspected to ensure that the minimum fill level is met using laser level measurement, and if it is not, inert fill is added. Then

they are lidded, decontaminated, swabbed, monitored to verify that the surface dose rate is allowable, and subsequently delivered to the LEH system.

Figure 2-1 provides the contextual depiction of the LFH system in terms of its primary interrelationships with other systems and utilities. This diagram does not differentiate among utilities that have both a normal and safety service provision. This diagram is used in support of functional and performance definition at the system level. Figure 2-2 shows a simplified process flow diagram of the LFH system. The shaded box on the left of the drawing depicts the boundary between the LPH and LFH systems.

System interfaces are provided for reference only. Except where a level of interface with the LFH needs to be defined, no attempt is made in this document to define system-level functions, performance, or design requirements for systems that interface with LFH (see Section 1.5.2 for the list of relevant system designators).

Figure 2-1– LFH Context Diagram

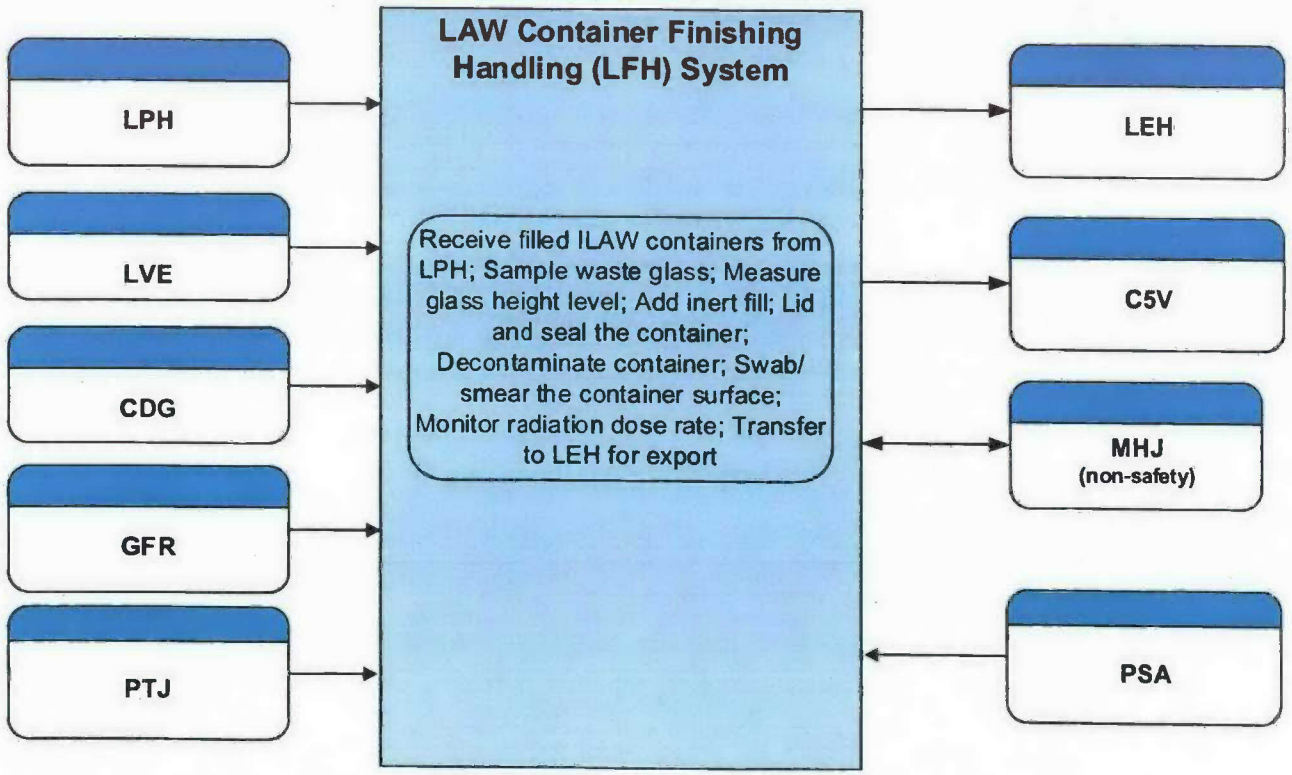

Figure 2-2– LFH Simplified Diagram

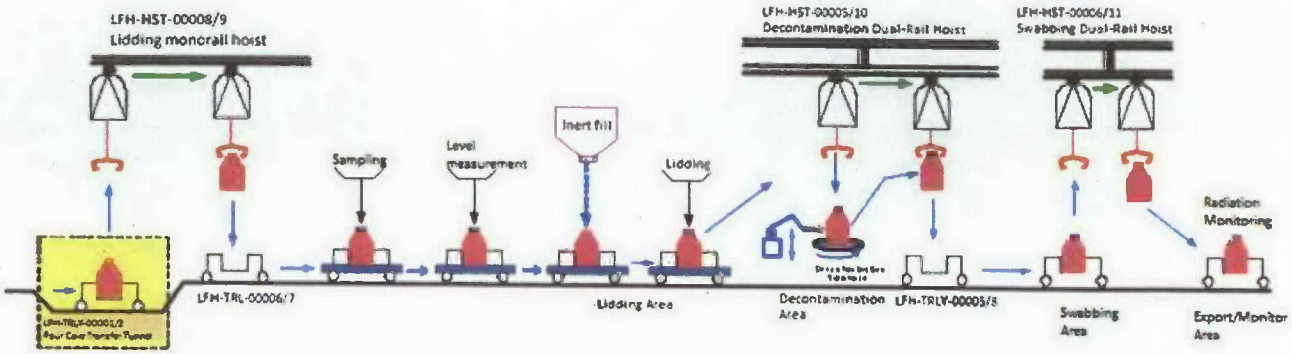

2.1 System Functions/Safety Functions

Figure 2-3 provides the functional block diagram for the LFH system, indicating the internal and external systems and utilities that provide the primary support or interface for that function. Section 3 provides the design and performance design requirements to meet both functional and other requirements.

Figure 2-3 - LFH Functional Block Diagram

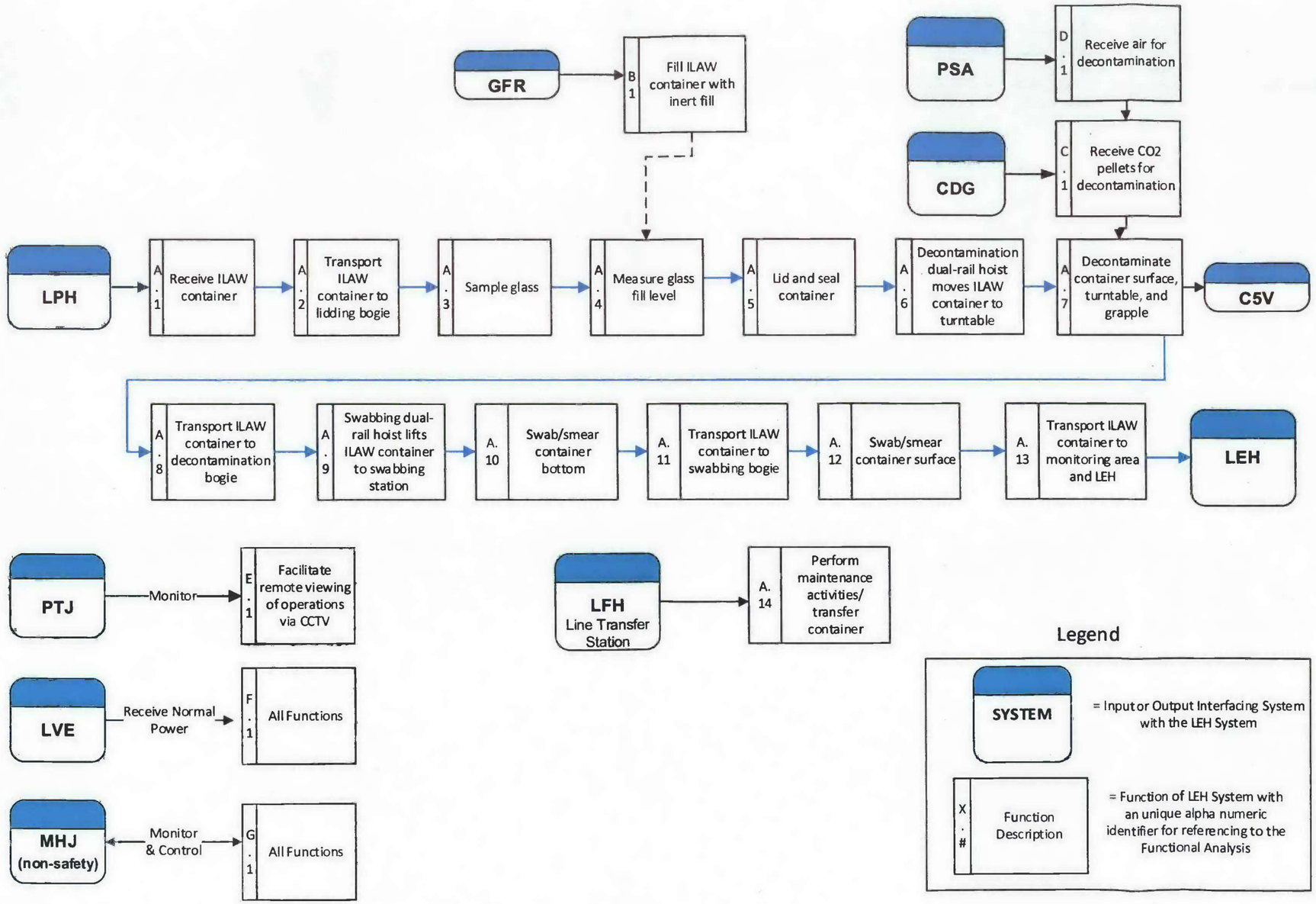

The functions in Table 2-1 are the primary and secondary level functions of the LFH system. These functions are further described below. Where appropriate to support definition of functional/design requirements, functions have been further decomposed and additional levels of supporting functions are also described. The requirement section number provides the location of the applicable functional analysis incorporated into system requirements.

Appendix B provides a further decomposition of system functions, including initiating, terminating, and integrating events and functions.

Table 2-1 - Functional Analysis and Crosswalk to Requirements

Reference	Functional Analysis Description	Requirement Section Number
A.1	Receive ILAW container – The lidding monorail hoists (LFH-HST-00008/-00009) receive filled ILAW containers from the LPH system through the lidding trap doors (LFH-DOOR-00009/-00010). There is one monorail hoist in each finishing line.	3.4.1.5 3.6.1.2
A.2	Transport ILAW containers to lidding bogie – The lidding bogies (LFH-TRLY-00007/-00006) accept the filled ILAW containers from the lidding monorail hoists in each finishing line. The bogie is positioned at the shard sampling station for fill level measurement and shard sampling if required. The lidding bogies also transport the ILAW container to the inert fill station if the fill level is below the 90% volume minimum. The lidding bogies have an elevating table and serves as the operations platform at the shard sampling, inert fill, and lidding stations.	3.4.1.5 3.6.1.2 3.7.1.3
A.3	Sample glass – The shard sampling stations create, retrieve, and export for analysis glass shard samples (if required). If a sample is collected, it is exported via a posting port to a glovebox.	3.8.1.1
A.4	Measure glass fill level – The fill level of the ILAW container is measured at the shard sampling station in each finishing line. The container is returned to the shard sampling station after receiving inert fill to confirm adequate fill level.	3.11.1.2
A.5	Lid and seal container – The ILAW container receives the lid with its attached seal at the lidding station. The lid press (LFH-LID-00025/-00026) retrieves a lid from the lid magazine and presses it into place. The lidding station can also clean the container lid seal and latch groove area, or remove a lid that has not properly engaged.	3.11.1.1 3.8.1.1
A.6	Transport ILAW container to turntable – After the shield door (LFH-DOOR-00015/-00019) between the lidding and decontamination areas is opened, the decontamination dual-rail hoist (LFH-HST-00010/-00005) lifts the ILAW container. The hoist transports the container between the turntable and either the lidding or decontamination bogie. The hoist's rotating hook is used to rotate the container while the bottom is being decontaminated.	3.4.1.5 3.6.1.2 3.7.1.3 3.11.2.1
A.7	Decontaminate container surface, turntable, and grapple – The ILAW container is placed on a decontamination turntable (LFH-TTBL-00001/-00002) after the turntable has been decontaminated. The grapple is also decontaminated. Power manipulators are used to decontaminate the ILAW container. There is an upper and lower manipulator in each decontamination station (LFH-MANIP-00011/-00001/-00012/-00008). The upper manipulators decontaminate the top and sides of the container.	3.8.1.3 3.11.2.1

Table 2-1 - Functional Analysis and Crosswalk to Requirements

Reference	Functional Analysis Description	Requirement Section Number
	The lower manipulators decontaminate the bottom and sides. Decontamination is performed by CO_2 pellets being shot at the container surface from end-effectors on the upper and lower power manipulators. The pellets sublimate when they contact the container. The CO_2 produced by the CDG, the ablated contaminants, and transport air are removed by dedicated exhaust fans and HEPA filters within a duct attached to the shroud that contains the nozzles. The filtered exhaust stream is exhausted by the C5V system.	
A.8	Transport ILAW container to decontamination bogie – After the container is decontaminated, the decontamination dual-rail hoist places it on the decontamination bogie. The decontamination bogie (LFH-TRLY-00005/-00008) is brought in to the decontamination station from the swabbing station's clean environment. This prevents contamination of the now clean ILAW container. The decontamination bogie transports the container to the swabbing station through an opened decontamination/swabbing containment door (LFH-DOOR-00022/-00020).	3.4.1.5 3.6.1.2 3.7.1.3
A.9	Transport ILAW container to swabbing station – The swabbing dual-rail hoist (LFH-HST-00011/-00006) lifts the container from the decontamination bogie. The hoist is also used to rotate the raised container while the bottom is swabbed.	3.4.1.5 3.6.1.2
A.10	Swab/smear container bottom – The swabbing dual-rail hoist rotates a raised ILAW container to allow the bottom surface to be swabbed. The bottom is swabbed to ensure that the product container does not exceed contract contamination limits. Swabs are transported to a posting port in the swabbing area which conveys them to a glovebox for analysis.	3.8.1.3 3.11.2 3.12.1.1
A.11	Transport ILAW container to swabbing bogie – The swabbing dual-rail hoist lowers the container to the swabbing bogie (LFH-TRLY-00001/-00015) which is equipped with a turntable (LFH-TTBL-00005/-00006). The turntable rotates and acts as the operations platform for swabbing. The swabbing bogie is brought into the swabbing area from the export/monitor station through an opened swab/export containment door (LFH-DOOR-00016/-00012).	3.4.1.5 3.6.1.2 3.7.1.3
A.12	Swab/smear container surface – The container side, top, and flange areas is swabbed to ensure that the product container does not exceed contract contamination limits. Swabs are transported to the posting port in the swabbing area which conveys them to a glovebox for analysis.	3.8.1.3 3.11.2 3.12.1.1
A.13	Transport ILAW container to monitoring area and LEH - The swabbing bogie transports the ILAW container to the monitoring/export station through the swab/export containment door. Once the container has been filled to the required level, sealed, decontaminated, and has passed swabbing and monitoring, the export bridge crane exports it to the LEH system through the decontamination/storage trap doors (LFH-DOOR-00002/-00018).	3.4.1.5 3.6.1.2
A.14	Perform maintenance activities/transfer container – The line transfer monorail (LFH-HST-00001) is used to transport containers between the north and south finishing lines through trap doors (LFH-DOOR-00014/-00011). This allows manned entries to access failed equipment by routing in-process containers around failed in-cell equipment. Equipment, such as power manipulators, is also transferred in and out of the lidding and	3.4.1.5 3.6.1.2 3.8.1.2

Table 2-1 - Functional Analysis and Crosswalk to Requirements

Reference	Functional Analysis Description	Requirement Section Number
	decontamination areas. The line transfer station is also used for reloading the lid magazines at the lidding station.	
B.1	Fill ILAW container with inert fill - If the container fill level is below the 90% volume minimum contract requirement, it is sent to the inert fill station. The inert fill is added to a partially glass-filled container to comply with the contract void space requirements. The fill is silica from the GFR system and is delivered pneumatically from a totally enclosed system to ensure no moisture is introduced. This function may not be performed for each container.	3.11.1.2
C.1	Receive CO_2 pellets for decontamination – CO_2 pellets come from the CDG system and are used to decontaminate the ILAW containers.	3.11.2.1
D.1	Receive air for decontamination – Plant service air is used as blast air for the CO_2 pellets to perform decontamination activities.	3.11.2.1
E.1	Facilitate remote viewing of operations via CCTV – The PTJ system provides remote viewing of LFH operations via CCTV.	3.4.4.3 3.4.4.4 3.4.4.5
F.1	Receive Electrical Power – The low voltage electrical (480/208/120 V) system (LVE) provides normal power to LFH components requiring electrical power from the LVE.	N/A
G.1	Support Monitoring and Controlling – The mechanical handling control system (MHJ) provides non-safety monitoring and control functions for LFH equipment requiring remote operation.	3.10.1.1 3.10.2.1

2.2 System Classification

The LFH System contains components with the following classifications/designations:

- ☐ Safety Class
- ☐ Safety Significant
- ☒ Dangerous Waste Permit affecting
- ☐ Air Permit affecting
- ☐ Waste Acceptance Impacting
- ☒ General

2.3 Basic Operational Overview

A functional description of the LFH system is provided in Sections 2 and 2.1, which provide the context diagram for the system, interfaces with other systems, a functional block diagram, and descriptions of system functions. A basic operational system overview is described in this section. Detailed operational information is provided in Section 4.

The LFH system is composed of two identical finishing lines. ILAW product containers are received from the LPH system at the west end of LFH and are processed in the east direction. The containers are inspected to ensure that the minimum fill level is met, and if it is not, inert fill is added. Then they are lidded, decontaminated, monitored to verify that the surface dose rate is allowable, and subsequently delivered to the LEH system. Each finishing line includes a lidding area consisting of a sampling station, an inert fill station, and a lidding station. A transport bogie called the lidding bogie receives the filled

container from the pour cave. It is used to transport the container between the lidding area stations and the decontamination station. Each finishing line also includes a decontamination station, a swabbing station, and a monitoring/export station. The two finishing lines share a transfer station. The decontamination station is directly adjacent to the lidding area and receives a container from that lidding area when lidding has been completed. One container can be in the lidding area, one in the decontamination station, and one in the swabbing station at any given time. If neither finishing line is available when a container has been filled and removed from a pour cave, the container may be moved into the buffer storage using a buffer store crane.

3 Design Requirements

3.1 Requirements

Requirements are documented in Sections 3.4 through section 3.13. Each requirement statement is accompanied by a basis discussion (as needed) and the expected means of verification. Requirements must be met in design. If a requirement stated in this document cannot be met in design, then a revision to the requirement needs to be pursued, if possible, or the design must be changed to meet the requirement.

Requirements preceded by "**[HOLD]**" may only be used in support of preliminary or committed design, which shall also be issued with appropriate holds per procedure 24590-WTP-3DP-G04B-00046, *Engineering Drawings*. Requirements may not be used in support of fabrication or construction.

The following abbreviations are used to designate the selected method for verification (see 24590-WTP-GPG-ENG-0161, *Technical Requirements Management*, for additional guidance concerning methods of verification):

(I) Inspection
(A) Analysis
(D) Demonstration
(T) Test

The following abbreviations are used to designate the organization responsible for performing the verification:

(ENG) Engineering
(CON) Construction
(SU) Start-up
(COM) Commissioning
(SUP) Supplier
(SUB) Subcontractor
(SQR) Supplier Quality Representative
(REC) Receiving

3.2 Bases

Basis discussions are provided as needed to explain the decomposition or interpretation from the originating source requirement(s). Where included, basis discussions provide supplementary information to help the reader understand the origin or intent of a requirement. Basis statements do not include requirements and are not to be considered as requirements. Where a HOLD has been applied to a requirement, this section will include the basis for the HOLD.

3.3 References

The requirements include a source document reference and DOORS® Unique Identification Numbers (hereafter referred to as Identification Numbers or IDs). Each unique source document reference, with ID number(s), is bracketed separately. Requirements may include a reference to Section 2.1, "System Functions/Safety Functions", which are listed in parentheses following the source document and ID number references. A complete listing of all source references may be found in section 5.

3.4 General Requirements

3.4.1 Mission and Functional/Performance Requirements (Including States/Modes)

3.4.1.1 LFH Production Rates

Requirement: The LFH system shall be designed to support a glass production rate of 15 MTG/day per finishing line (30 MTG/day total or 5 filled ILAW containers per day), including glass sampling when required. [Section 6.3.2, BOD, [ID: DB-ENG-01-001 ID#10340]] [Section 1.4.2, ICD 15, [ID: WTP-ICD-MG-01-015 ID#10245]] [Section C.7(b)(2), DOE/BNI Contract, [ID: DE-AC27-01RV14136 Section C ID#1165]] [Section 14.14, ORD, [ID: RPT-OP-01-001 ID#1545]]

Basis Discussion: The LFH system works in conjunction with other LAW systems to support a 30 MTG/day design production rate with availability of 70% (21 MTG/day).

Verification: Verification is expected to be achieved through:

Verif. Method	Verif. By	Plan	Notes/Comments
A	ENG	Perform an analysis to confirm that LFH system will support the production rate of 30 MTG/day.	
I	ENG	Review of design to verify conformance to throughput analysis requirement.	

3.4.1.2 Design (Operating) Life

Requirement: Non-replaceable, permanent LFH system plant equipment shall be designed for a minimum design life of 40 years, inclusive of maintenance. All non-maintainable items of LFH equipment shall be designed to last the life of the facility (40 years). Design life of equipment shall consider the effects of chemical, radiological and thermal exposure. [Section 11.1.1, BOD, [ID: DB-ENG-01-001 ID#11367]]

Basis Discussion: Equipment and material selection is based on proven performance, value engineering principles, and fit-for-function principles. The selection of equipment and materials is further addressed in detail as the design progresses. Equipment design needs to consider the routine environmental exposures under normal operations for non-safety equipment; safety and PAM equipment also considers abnormal and emergency exposures—this minimizes the need for equipment maintenance, exposure, and radiological waste generation in radiological areas. [ALARA]

Verification: Verification is expected to be achieved through the following:

Verif. Method	Verif. By	Plan	Notes/Comments
I	ENG	Review design to verify design life of non-replaceable, non-maintainable SSCs is documented in procurement documents and supported by supplier certificates of conformance.	May be documented in an assessment or evaluation.

3.4.1.3 Seismic Design for Interaction Effects

Requirement: All permanently mounted LFH equipment, shall at a minimum be designated Seismic Category-IV. Interaction effects shall be considered when determining the seismic category of individual items and, where an adverse seismic interaction with SC or SS equipment exists, adequate measures shall be taken to preclude the adverse interaction. [Section 10.2.15, BOD, [ID: DB-ENG-01-001 ID#13213]] [Criterion 4.1-3, SRD, [ID: SRD-ESH-01-001-02 ID#1519]]

Basis Discussion: There are no LAW PDSA SC or SS SSCs associated with the LFH. Equipment that is non-safety may be identified as having a potential for adverse interaction with safety equipment during a seismic event in accordance with 24590-WTP-GPG-ENG-033, *Evaluation for Seismic Interaction Effects*. Where a resolution strategy is selected that would increase the seismic category of the source SSC to protect the safety (target) SSC, an analysis will be performed to determine that the source SSC can withstand an increased seismic event.

Verification: Verification is expected to be achieved through the following:

Verif. Method	Verif. By	Plan	Notes/Comments
I	ENG	Perform an evaluation of the LFH system to verify seismic categorization of equipment based on interaction effects per 24590-WTP-GPG-ENG-033 and devise a control strategy for all open interactions.	
A/T	ENG/SUP	Analysis or testing performed on SSCs to verify the ability to withstand the seismic loadings for their respective seismic categories to the extent necessary to prevent interactions.	May be documented in a seismic design report.
I	ENG	Review design to verify conformance to the as-tested/as-analyzed configuration.	

3.4.1.4 Decontaminated Equipment Durability

Requirement: LFH equipment and shield doors subject to decontamination shall be designed to withstand this process without any reduction of functionality through degradation of the electrical, mechanical, or any other components involved. [Sections 7.1, 9.1, and 14.16, ORD, [ID: RPT-OP-01-001

ID#1121], [ID: RPT-OP-01-001 ID#1171], [ID: RPT-OP-01-001 ID#1557]] [Section 11.8.3.2, BOD, [ID: DB-ENG-01-001 ID#11558]]

Basis Discussion: Equipment operating in a contaminated environment is monitored and, if necessary, decontaminated before maintenance. The specifications convey that the equipment design accounts for these processes. The LAW Facility is a hands-on maintenance facility and cranes shall be decontaminated using local decontamination methods such as wipes, strippable coating and tack cloths in lieu of gross decontamination methods (steam, warm water, detergent solutions). [ALARA]

Example LFH equipment subject to decontamination includes:

- Monorail and Dual-rail hoists
- Jib cranes
- Bogies and bogie mounted swabbing turntables
- SPADs and shield/containment doors
- Lid press and parking stand, lid recovery tool and parking stand
- Lid magazine and lid magazine B
- Lidding disposal bin, tool trays, and seal prep tool
- Grapples
- Decontamination and swabbing robots
- MSMs
- Shard sampling, level measurement, and inert fill equipment.

Verification: Verification is expected to be achieved through:

Verif. Method	Verif. By	Plan	Notes/Comments
I	ENG	Review the LFH design to verify equipment and shield doors listed above can withstand local decontamination methods without degradation or reduction in equipment functionality.	
I	ENG	Review the design to verify LFH equipment and shield doors subject to decontamination facilitate local decontamination methods.	May be documented in an evaluation/assessment.
I	ENG	Review shield door design, and facility architectural room finish schedules, to verify coatings applied to shield door panels are, at a minimum, equivalent to those specified for the room that houses the door panel.	May be documented in an evaluation/assessment.

3.4.1.5 Container Transfers

Requirement: The LFH system shall provide the capability to perform the following container transfers: (A.1, A.2, A.6, A.8, A.9, A.11, A.13, A.14)

- Receive filled ILAW container from LPH through the lidding trap door (A.1)
- Transfer container from lidding monorail hoist to lidding bogie (A.2)
- Transfer container from lidding bogie to decontamination dual-rail hoist (A.6)
- Transfer container from decontamination dual-rail hoist to decontamination turntable (A.6)
- Transfer container from decontamination turntable to decontamination bogie (A.8)
- Transfer container from decontamination station to swabbing station (A.9)
- Transfer container from swabbing dual-rail hoist to swabbing bogie (A.11)
- Transfer container to monitoring area and LEH system for export through trap door (A.13)
- Perform maintenance activities or transfer container to other finishing line with line transfer station and trap door (A.14)

Basis Discussion: The listed container transfers are performed by LFH equipment.

Verification: Verification is expected to be achieved through the following:

Verif. Method	Verif. By	Plan	Notes/Comments
I	ENG	Review the design to verify the capability to perform the listed container transfers.	
D	SU/COM	Demonstrate the ability to transfer and transport the container.	

3.4.1.6 Room Environment Conditions for Non-Safety SSCs

Requirement: LFH equipment and components tagged non-safety shall be designed to operate and withstand the internal environment conditions of the LAW facility, taking into account the in-cave chemical, radiological, and thermal environment. [Sections 11.16, 14.8, and 16.1, ORD, [ID: RPT-OP-01-001 ID#1373], [ID: WTP-RPT-OP-01-001 ID#1522], [ID: RPT-OP-01-001 ID#1606]] [Section 11.4.1, BOD, [ID: DB-ENG-01-001 ID#11427]]

Basis Discussion: LFH SSCs are designed to function as intended in the room environment conditions associated with their location. Table 12-1 of the BOD contains typical room temperatures but since the LFH system is in a process area, there will be localized temperatures that are above the typical values. [ALARA]

Verification: Verification is expected to be achieved through:

Verif. Method	Verif. By	Plan	Notes/Comments
A	ENG	Perform an analysis to determine the internal environment conditions of the rooms containing LFH equipment and components.	
I	ENG	Review the design of LFH equipment and components to verify that they are able to operate and withstand the internal environment conditions associated with their locations.	

3.4.1.7 Container Cross Contamination Prevention

Requirement: Provisions shall be made to prevent contamination of clean containers with contaminated grapples. [Section 14.11, ORD, [ID: RPT-OP-01-001 ID#1534]]

Basis Discussion: None.

Verification: Verification is expected to be achieved through:

Verif. Method	Verif. By	Plan	Notes/Comments
I	ENG	Review the design to verify that provisions are made to prevent contamination of clean containers with contaminated grapples.	
D	SU/COM	Demonstrate the ability to transfer a container without cross contamination.	

3.4.1.8 Temperature Element Installation

Requirement: Temperature elements shall be installed in thermowells to allow removal without significantly interrupting the process. [Section 11.16, ORD, [ID: WTP-RPT-OP-01-001 ID#1373]]

Basis Discussion: Installing temperature elements in thermowells reduces maintenance time and worker exposure to process fluids. Although processes will still be interrupted during maintenance, the extent of the interruption will be minimized.
[ALARA]

Verification: Verification is expected to be achieved through the following:

Verif. Method	Verif. By	Plan	Notes/Comments
I	ENG	Review design to verify temperature elements are installed in thermowells.	

3.4.2 Nuclear Safety, ALARA, Environmental, and Other Regulatory Requirements

There are no LAW Facility PDSA Safety Class (SC), Safety Significant (SS), or Post Accident Monitoring (PAM) requirements for the LFH system.

3.4.3 System Interface Requirements

None

3.4.4 Other Technical, Specialty, Operations, and Maintenance Requirements

3.4.4.1 Permanently Lubricated Components

Requirement: Permanently lubricated, sealed for life components shall be used wherever practical. [Section 11.8.3.2, BOD, [ID: DB-ENG-01-001 ID#11557]] [Section 9.1, ORD, [ID: RPT-OP-01-001 ID#1172]]

Basis Discussion: None. [ALARA]

Verification: Verification is expected to be achieved through:

Verif. Method	Verif. By	Plan	Notes/Comments
I	ENG	Review design to verify permanently lubricated, sealed for life components are used wherever practical.	

3.4.4.2 Hands-On Maintenance

Requirement: LFH equipment shall be designed to be maintained using hands-on maintenance techniques. [Section 11.8.3.2, BOD, [ID: DB-ENG-01-001 ID#11558]]

Basis Discussion: The LAW is a hands-on maintenance facility.

Verification: Verification is expected to be achieved through:

Verif. Method	Verif. By	Plan	Notes/Comments
I	ENG	Review the design to verify that the equipment in the LFH system is capable of being maintained properly with hands-on maintenance techniques.	May be documented in an assessment.

3.4.4.3 Viewing Operations

Requirement: Cameras and/or shield windows shall be provided for remote viewing of LFH mechanical handling equipment requiring remote operation. [Sections 11.5, 12.4, and 14.16, ORD, [ID: RPT-OP-01-001 ID#1274], [ID: RPT-OP-01-001 ID#1390], [ID: RPT-OP-01-001 ID#1550]] [Sections 7.2.5 and 9.3, BOD, [ID: DB-ENG-01-001 ID#10562], [ID: DB-ENG-01-001 ID#10957], [ID: DB-ENG-01-001 ID#10958], [ID: DB-ENG-01-001 ID#10959]] (E.1)

Basis Discussion: Cameras and/or shield windows for viewing operations are located to provide optimum viewing angles and distance to suit the operations. CCTV monitoring is provided adjacent to or integrated with remote operator interfaces in the control rooms and local operator interfaces when operations are not visible. [ALARA]

Verification: Verification is expected to be achieved through the following:

Verif. Method	Verif. By	Plan	Notes/Comments
I	ENG	Review design to verify cameras and/or shield windows are provided for viewing of remotely operated LFH equipment.	
D	SU/COM	Demonstrate cameras and/or shield windows provide adequate viewing to perform required remote LFH mechanical handling operations.	Adequate viewing capabilities may be demonstrated as part of the verification demonstration for remote operation of LFH equipment.

3.4.4.4 Remote Operation

Requirement: LFH mechanical handling equipment requiring remote operation, including cranes and hoists, shall be operated from remote operator interfaces using CCTV monitors or through shield windows by direct observation. [Sections 11.5, 12.4, and 14.16, ORD, [ID: RPT-OP-01-001 ID#1274], [ID: RPT-OP-01-001 ID#1390], [ID: RPT-OP-01-001 ID#1550]] [Sections 7.2.5 and 9.3, BOD, [ID: DB-ENG-01-001 ID#10562], [ID: DB-ENG-01-001 ID#10957], [ID: DB-ENG-01-001 ID#10958], [ID: DB-ENG-01-001 ID#10959]] (E.1)

Basis discussion: Cranes and hoists in maintenance areas are not required to be operated remotely. [ALARA]

Verification: Verification is expected to be achieved through:

Verif. Method	Verif. By	Plan	Notes/Comments
I	ENG	Review design to verify remotely operated LFH equipment can be operated from various remote operator interfaces using CCTV monitors and/or shield windows.	
D	SU/COM	Demonstrate operation of remotely operated LFH equipment from remote operator interfaces using CCTV monitors and/or shield windows.	Physical demonstration

3.4.4.5 Viewing for Absence of Foreign Materials

Requirement: Cameras shall be provided for remote viewing of internals of filled ILAW containers just prior to the addition of any inert filler and container closure. [Section C.8 Specifications 2.2.2.14 and 2.2.2.15, DOE/BNI Contract, [ID: DE-AC27-01RV14136 Section C ID#258], [ID: DE-AC27-01RV14136 Section C ID#260]] [Sections 4.1.14.3 and 4.1.15.3, ILAW Compliance Plan, [ID: WTP-PL-RT-03-001 ID#10444], [ID: WTP-PL-RT-03-001 ID#10453]] (E.1)

Basis Discussion: Cameras for viewing operations are located to provide optimum viewing angles and distance to allow confirmation of the absence of foreign materials in the filled ILAW container.

Verification: Verification is expected to be achieved through the following:

Verif. Method	Verif. By	Plan	Notes/Comments
I	ENG	Review design to verify cameras are provided for viewing of internals of filled ILAW containers just prior to the addition of any inert filler and container closure.	
D	SU/COM	Demonstrate cameras provide adequate viewing to perform required container internal visual inspection.	

3.5 Grapple Requirements

All LAW grapples are of the same design for consistency and interchangeability. Requirements associated with the grapples are included in 24590-LAW-3ZD-LRH-00001, LAW Container Receipt Handling (LRH) System Design Description.

3.6 Crane and Hoist Requirements

3.6.1 Mission and Functional/Performance Requirements (incl. states/modes)

3.6.1.1 Codes and Standards

Requirement: The LFH cranes and hoists shall be designed per ASME B30.2, ASME B30.11, ASME B30.16, or CMAA 70, as applicable. [Sections 11.1.2 and 11.8.1, BOD, [ID: DB-ENG-01-001 ID#11373], [ID: DB-ENG-01-001 ID#11539]]

Basis Discussion: None

Verification: Verification is expected to be achieved through:

Verif. Method	Verif. By	Plan	Notes/Comments
I	ENG	Review design of the cranes and hoists to verify adherence to applicable codes and standards.	

3.6.1.2 Lifting Capacity

Requirement: System LFH cranes and hoists shall be designed with sufficient capacity to lift the following items, in conjunction with applicable lifting beams or apparatus: (A.1, A.2, A.6, A.8, A.9, A.11, A.13, A.14)

- Filled ILAW product container
- Filled lid magazines
- Lid press
- Lid recovery device

Basis Discussion: The cranes and hoists are designed to lift items that they will lift during normal and maintenance operations. For example, the jib cranes are not designed to lift a container.

Verification: Verification is expected to be achieved through the following:

Verif. Method	Verif. By	Plan	Notes/Comments
I	ENG	Review crane and hoist design to verify capability of lifting the listed in-cave equipment.	May be documented in an evaluation/assessment report.

3.6.1.3 Cranes and Hoists Design

3.6.1.3.1 Modular Design

Requirement: System LFH cranes and hoists shall include modular, separable components for ease of maintenance/replacement. Modules shall have quick connectors to allow rapid reconnection of cabling or other services. [Section 11.8.3.2, BOD, [ID: DB-ENG-01-001 ID#11558]] [Sections 7.4 and 14.16, ORD, [ID: RPT-OP-01-001 ID#1132], [ID: RPT-OP-01-001 ID#1551], [ID: RPT-OP-01-001 ID#1549]]

Basis Discussion: Motors, gear reducers, and wheel bearings subject to failure are located and mounted such that they can be replaced by one or two personnel working from the bridge, trolley, scissors lift, or scaffolding using an overhead maintenance crane as necessary. This is to be done by minimizing shimming for alignment of motors and gearboxes. This may consist of the following components: [ALARA]

- Wheel assemblies
- Hoist gearboxes, motors, and brakes
- Trolley gearboxes, motors, and brakes
- Bridge gearboxes, motors, and brakes

Verification: Verification is expected to be achieved through:

Verif. Method	Verif. By	Plan	Notes/Comments
I	ENG	Review crane and hoist design to ensure incorporation of modular components with service disconnects.	May be documented in an evaluation/assessment. Plant Engineering to participate in or review the evaluation/assessment.

3.6.1.3.2 Materials of Construction

Requirement: Cranes, hoists, and rails shall be of carbon steel construction. Construction materials shall be resistant to radiation, process solutions, and decontamination agents. [Section 11.8.3.2, BOD, [ID: DB-ENG-01-001 ID#11558]] [Section 20, ORD, [ID: WTP-RPT-OP-01-001 ID#1726]]

Basis Discussion: None.

Verification: Verification is expected to be achieved through:

Verif. Method	Verif. By	Plan	Notes/Comments
I	ENG	Review design to verify cranes, hoists, and rails are constructed of carbon steel.	

3.6.1.4 Rotating Hooks

Requirement: Sealed bearings and motors shall be used for the rotating hooks on the decontamination and swabbing dual-rail hoists. [Section 11.8.3.2, BOD, [ID: DB-ENG-01-001 ID#11558]]

Basis Discussion: Parts are sealed to minimize maintenance. The swabbing hoist uses a load block mounted grapple that rotates in place of a rotating hook. This requirement applies to LFH-HST-00005/-00010/-00006/-00011. [ALARA]

Verification: Verification is expected to be achieved through:

Verif. Method	Verif. By	Plan	Notes/Comments
I	ENG	Review design to verify rotating hooks have sealed bearings and motors.	

3.6.1.5 Crane Support for Equipment Transfer

Requirement: LFH cranes and hoists shall be designed to support the removal and replacement of equipment. [Section 20, ORD, [ID: RPT-OP-01-001 ID#1728]]

Basis Discussion: The source requirements (WTP Contract, PDSA, ORD, and SRD) do not address in detail the removal and replacement of failed equipment by the LFH system. The specific procedures for these derived tasks are developed and managed by the plant operations team.

Verification: Verification is expected to be achieved through the following:

Verif. Method	Verif. By	Plan	Notes/Comments
I	ENG	Review the design to verify that the LFH cranes and hoists are capable of removing and replacing the required equipment.	May be documented in an assessment.

3.6.2 Nuclear Safety, ALARA, Environmental, and Other Regulatory Requirements

None

3.6.3 System Interface Requirements

3.6.3.1 Crane Lighting

Requirement: Lights shall be mounted on cranes to illuminate the working area below (except on single girder cranes) with adequate lighting below. [Section 14.16, ORD, [ID: RPT-OP-01-001 ID#1559]] [Section 11.8.3.2, BOD, [ID: DB-ENG-01-001 ID#11558]]

Basis Discussion: The recommended lighting levels are to be provided per IESNA Recommended Practices (RP-1, RP-7, and RP-8) as discussed in Section 8.6.1.1 of the BOD. The facility lighting will also have to be taken into account when determining what the illumination level below the cranes and hoists is.

Verification: Verification is expected to be achieved through:

Verif. Method	Verif. By	Plan	Notes/Comments
I	ENG	Review design documentation to verify lights are mounted on the LFH cranes and hoists.	
T	SU/COM	Measure illumination levels below the LFH cranes and hoists to verify crane/hoist and facility lighting complies with IESNA Standards.	

3.6.4 Other Technical, Specialty, Operations, and Maintenance Requirements

3.6.4.1 Crane and Hoist Brakes

Requirement: Brakes on crane and hoist drive functions shall be designed to be set when power is off. [Section 14.16, ORD, [ID: RPT-OP-01-001 ID#1558]] [Section 11.8.3.2, BOD, [ID: DB-ENG-01-001 ID#11558]]

Basis Discussion: To prevent the cranes from travelling along the rails when not in operation, the brakes on all drive functions are set when the power is off.

Verification: Verification is expected to be achieved through:

Verif. Method	Verif. By	Plan	Notes/Comments
I	ENG	Review design to verify brakes are set when crane and hoist power is off.	
D	SU/COM	Demonstrate that crane and hoist brakes engage with a loss of power.	

3.6.4.2 Lubrication Systems

Requirement: Crane and hoist systems shall be designed with lubrication systems that are accessible for ease of maintenance. [Section 14.16, ORD, [ID: RPT-OP-01-001 ID#1566]] [Section 11.8.3.2, BOD, [ID: DB-ENG-01-001 ID#11558]]

Basis Discussion: The accessible lubrication points on the cranes and hoists will help the operators minimize the time it takes to perform maintenance. [ALARA]

Verification: Verification is expected to be achieved through:

Verif. Method	Verif. By	Plan	Notes/Comments
I	ENG	Review crane and hoist design for accessible lubrication systems.	

3.6.4.3 Crane Interference

Requirement: Maintenance cranes shall be designed and installed such that there is no interference with normal operations of the process cranes. [Section 14.16, ORD, [ID: RPT-OP-01-001 ID#1553]] [Section 11.8.3.2, BOD, [ID: DB-ENG-01-001 ID#11558]]

Basis Discussion: None.

Verification: Verification is expected to be achieved through:

Verif. Method	Verif. By	Plan	Notes/Comments
I	ENG	Review design to verify maintenance cranes do not interfere with process crane operation.	

3.6.4.4 Crane and Hoist Recovery

Requirement: Recovery features shall be provided in the equipment designs to retrieve failed cranes and hoists to their maintenance area, or provisions for in-place maintenance are provided. [Sections 11.3.2.2 and 11.8.3.2, BOD, [ID: DB-ENG-01-001 ID#11396], [ID: DB-ENG-01-001 ID#11558]] [Sections 9.1, 14.1, and 14.16, ORD, [ID: RPT-OP-01-001 ID#1463], [ID: RPT-OP-01-001 ID#1554], [ID: RPT-OP-01-001 ID#1561], [ID: RPT-OP-01-001 ID#1190]]

Basis Discussion: Failed cranes and hoists are to be retrieved and brought to the maintenance platform.

Verification: Verification is expected to be achieved through:

Verif. Method	Verif. By	Plan	Notes/Comments
I	ENG	Review design to verify that recovery features are provided for the LFH cranes and hoists.	
D	SU/COM	Demonstrate crane and hoist recovery capability in accordance with 24590-WTP-PL-RACT-RT-0001, *WTP Remotability Verification Plan.*	

3.7 Bogie Requirements

3.7.1 Mission and Functional/Performance Requirements (incl. states/modes)

3.7.1.1 Modular Design

Requirement: The LFH bogies shall include modular, separable components for ease of maintenance/replacement, such as wheel assemblies. [Section 11.8.3.2, BOD, [ID: DB-ENG-01-001 ID#11559]] [Section 7.1, ORD, [ID: RPT-OP-01-001 ID#1120]]

Basis Discussion: Wheel bearings subject to failure shall be located and mounted such that they can be replaced by one or two personnel using an overhead maintenance crane as necessary. [ALARA]

Verification: Verification is expected to be achieved through the following:

Verif. Method	Verif. By	Plan	Notes/Comments
I	ENG	Review equipment design to verify the use of modular components.	May be documented in an evaluation/assessment. Plant Engineering to participate in or review the evaluation/assessment.

3.7.1.2 Bogie Construction Material

Requirement: Bogies shall be constructed of carbon steel except for any part that may contact an ILAW container. These parts shall be constructed of stainless steel. Construction materials are resistant to radiation, process solutions, and decontamination agents. [Section 11.8.3.2, BOD, [ID: DB-ENG-01-001 ID#11559]] [Section 20, ORD, [ID: WTP-RPT-OP-01-001 ID#1726]]

Basis Discussion: Placing stainless steel containers onto carbon steel surfaces could result in carbon deposits in the stainless steel components, causing them to rust. The carbon steel components have special protective coatings applied for ease of decontamination. [ALARA]

Verification: Verification is expected to be achieved through the following:

Verif. Method	Verif. By	Plan	Notes/Comments
I	ENG	Review the bogie design to verify that bogies are of carbon steel construction and that stainless steel is used on parts that may contact an ILAW container.	

3.7.1.3 Bogie Capacity

Requirement: LFH bogies shall be designed with sufficient capacity to transport the filled ILAW containers through the LAW finishing lines. (A.2, A.6, A.8, A.11)

Basis Discussion: One filled ILAW container will be on a bogie at a time.

Verification: Verification is expected to be achieved through the following:

Verif. Method	Verif. By	Plan	Notes/Comments
I	ENG	Review bogie design to verify sufficient capacity for transporting filled ILAW product containers.	May be documented in an evaluation/assessment report.

3.7.2 Nuclear Safety, ALARA, Environmental, and Other Regulatory Requirements

None

3.7.3 System Interface Requirements

None

3.7.4 Other Technical, Specialty, Operations, and Maintenance Requirements

3.7.4.1 Bogie Recovery

Requirement: Bogies shall include backup/recovery provisions in the event of a failure. [Sections 7.1 and 9.1, ORD, [ID: RPT-OP-01-001 ID#1120], [ID: RPT-OP-01-001 ID#1190]] [Section 11.8.3.2, BOD, [ID: DB-ENG-01-001 ID#11559]]

Basis Discussion: Maximum loads are incorporated into the design of the recovery system. [ALARA]

Verification: Verification is expected to be achieved through the following:

Verif. Method	Verif. By	Plan	Notes/Comments
I	ENG	Review bogie design to verify remote recovery capability	
D	SU/COM	Demonstrate bogie recovery in accordance with 24590-WTP-PL-RACT-RT-0001, *WTP Remotability Verification Plan*	

3.8 Master–Slave Manipulator Requirements

3.8.1 Mission and Functional / Performance Requirements (Including States/Modes)

3.8.1.1 Master Slave Manipulators

Requirement: The LFH system design shall incorporate Master Slave Manipulators (MSMs) located to perform the following remote handling and in-cave maintenance operations. The entire operating area for manipulators in the X-Y-Z dimensions shall be designed with no obstructions adjacent to the shield window station from which they are operated. [Sections 11.4.1 and 11.4.5, BOD, [ID: DB-ENG-01-001 ID#11428], [ID: DB-ENG-01-001 ID#11443]] [Sections 10.5 and 14.14, ORD, [ID: RPT-OP-01-001 ID#1246], [ID: RPT-OP-01-001 ID#1545]] (A.3)

- Produce glass shard samples when required
- Vacuum the shards against a filter and deposit them in a sample vial
- Handling glass shard vials between posting port and shard tray
- Vacuum inert fill material left on the container flange
- Operation of the seal prep tool
- Alignment of lid recovery device on the container lid pins
- Perform in-cave maintenance operations

Basis Discussion: In-cave operations and maintenance is accomplished with through-wall manipulators. MSMs provide remote manipulation of tools and equipment at cave face shield window stations. [ALARA]

Verification: Verification is expected to be achieved through the following:

Verif. Method	Verif. By	Plan	Notes/Comments
I	ENG	Review the design to confirm that the MSMs are located to provide the required remote handling functionality.	
D	SU/COM	Demonstrate that the manipulators can perform the remote handling and maintenance operations listed above.	Assistance may be provided by in-cave cranes or other manipulators.

3.8.1.2 Manipulator Removal and Replacement

Requirement: Master-slave manipulator slave arms shall be designed to allow for removal and transport to decontamination/maintenance areas and placement in a storage area for future repair/replacement. [Sections 9.2 and 10.5, ORD, [ID: RPT-OP-01-001 ID#1198], [ID: RPT-OP-01-001 ID#1199], [ID: RPT-OP-01-001 ID#1246]] (A.14)

Basis Discussion: In case of failure, the manipulators need to be remotely removable and replaceable. [ALARA]

Verification: Verification is expected to be achieved through the following:

Verif. Method	Verif. By	Plan	Notes/Comments
I	ENG	Review design and installation to verify the ability to remove and replace the MSMs. Inspect installation to verify that reserved pull-space is adequate and no interferences prevent accessibility for MSM removal/replacement.	
D	SU/COM	Demonstrate MSM removal and replacement	Physical demonstration

3.8.1.3 Decontamination and Swabbing Manipulators

Requirement: The LFH decontamination and swabbing manipulators shall be selected based on their adequacy for reaching container surfaces and reliability in operation. [Section 11.8.3.2, BOD, [ID: DB-ENG-01-001 ID#11562]] (A.7, A.10, A.12)

Basis Discussion: Pedestal mounted power manipulators may be used for performing these tasks instead of master-slave manipulators. [ALARA]

Verification: Verification is expected to be achieved through the following:

Verif. Method	Verif. By	Plan	Notes/Comments
A	ENG	Perform an evaluation or analysis to determine the type of manipulator to be used for decontamination and swabbing activities.	
I	ENG	Review the design of the decontamination and swabbing manipulators to verify that the results of the analysis are incorporated.	
D	SU/COM	Demonstrate decontamination and swabbing activities.	Physical demonstration

3.8.2 Nuclear Safety, ALARA, Environmental, and Other Regulatory Requirements

None

3.8.3 System Interface Requirements

None

3.8.4 Other Technical, Specialty, Operations and Maintenance Requirements

None

3.9 Shield/Containment Door Requirements

3.9.1 Mission and Functional / Performance Requirements (Including States/Modes)

3.9.1.1 Shield/Containment Door Engineered Air Gap

Requirement: Shield doors shall be designed with airtight seals or provided with an engineered air gap which, in conjunction with the facility ventilation system, maintains an air cascade with a minimum perimeter airflow velocity of 200 feet per minute across shield door gaps separating C5 and C3 areas and a sufficient perimeter airflow velocity across shield door gaps separating C3 and C2 areas. [Section 7.1, ORD, [ID: RPT-OP-01-001 ID#1121]] [Sections 5.1.2, 11.8.3.2, and 12.3.2 BOD, [ID: DB-ENG-01-001 ID#10259], [ID: DB-ENG-01-001 ID#11560], [ID: DB-ENG-01-001 ID#11629]]

Basis Discussion: Airtight seals or an engineered air gap helps to control the spread of contamination and to maintain the cascading airflow from areas of low contamination to areas of higher contamination. [ALARA]

Verification: Verification is expected to be achieved through the following:

Verif. Method	Verif. By	Plan	Notes/Comments
A	ENG	Perform an analysis to determine air gap value(s) necessary to achieve 200 feet per minute airflow velocity around shield door perimeters that separate C5 and C3 areas.	
A	ENG	Perform an analysis to determine air gap value(s) necessary to achieve sufficient airflow velocity around shield door perimeters that separate C3 and C2 areas.	
I	SUP/ENG	Review the door design to verify conformance to airtight seals or engineered air gap requirements.	May be documented in factory acceptance test report.
I	CON	Inspect installed equipment to verify conformance to engineered air gap requirements.	

3.9.1.2 Ease of Decontamination

Requirement: Shield doors shall be made of carbon steel with a surface that is designed for ease of decontamination. [Section 7.1, ORD, [ID: RPT-OP-01-001 ID#1121]] [Section 11.8.3.2, BOD, [ID: DB-ENG-01-001 ID#11560]]

Basis Discussion: Door decontamination is performed using the same methods/agents used on the surrounding room. [ALARA]

Verification: Verification is expected to be achieved through the following:

Verif. Method	Verif. By	Plan	Notes/Comments
I	ENG	Review shield door design to verify materials or coatings applied facilitate decontamination.	May be documented in an evaluation/assessment.

3.9.1.3 Shield Door Design

Requirement: The shield door design shall permit simultaneous control of contamination and routing of breathing air hoses without pinching. [Sections 7.1 and 14.6, ORD, [ID: RPT-OP-01-001 ID#1121], [ID: RPT-OP-01-001 ID#1498]]

Basis Discussion: None.

Verification: Verification is expected to be achieved through the following:

Verif. Method	Verif. By	Plan	Notes/Comments
I	ENG	Review design to verify shield door assembly permits simultaneous contamination control and breathing air hose routing.	

3.9.2 Nuclear Safety, ALARA, Environmental, and Other Regulatory Requirements

None

3.9.3 System Interface Requirements

None

3.9.4 Other Technical, Specialty, Operations and Maintenance Requirements

None

3.10 Monitoring and Controls Requirements

3.10.1 Mission and Functional/Performance Requirements (incl. states/modes)

3.10.1.1 Mechanical Handling Control System

Requirement: LFH mechanical handling equipment requiring remote control shall be controlled and monitored through the MHJ. [Section 9.6.2, BOD, [ID: DB-ENG-01-001 ID#11116]] (G.1)

Basis Discussion: The MHJ system utilizes a number of operator interfaces for Facility Control Room (FCR) control, cave face control, or local control, and provides the following functions for LFH where appropriate:

- Sequence control of discrete mechanical handling equipment
- Device interlocks

- Control of process functions integral to the mechanical handling system
- Control of package-supplied equipment

Equipment located in normally accessible locations (C1/R1 to C3/R3 areas), which require remote (MHJ) control typically have the ability to be controlled locally. Some equipment located in normally accessible locations, may not have any connection to the MHJ and is only operated directly in a local mode. [ALARA]

Verification: Verification is expected to be achieved through the following:

Verif. Method	Verif. By	Plan	Notes/Comments
I	ENG	Review the LFH design to verify equipment requiring remote control is controlled through the MHJ.	
D	SU/COM	Demonstrate LFH equipment control using the MHJ.	

3.10.1.2 Level of Automation

Requirement: Mechanical handling equipment requiring remote control will be controlled through the MHJ using manual control to the extent practical. Automatic control will be used for repetitive sequences, or where operating complexity or event timing requirements preclude manual operation. Automatic control for repetitive sequences shall utilize operator-initiated sequence control, where practical and safe, up to critical steps requiring operator decision or verification. Sequences shall also be capable of stepping through each step, provided that doing so does not create safety hazards. Manual mode will be provided for equipment operated in automatic mode to enable equipment operation outside of automatic mode. [Sections 7.1, 7.1.1, 7.3.5.1, and 7.3.5.2, BOD, [ID: DB-ENG-01-001 ID#10529], [ID: DB-ENG-01-001 ID#10531], [ID: DB-ENG-01-001 ID#10576], [ID: DB-ENG-01-001 ID#10581], [ID: DB-ENG-01-001 ID#10582]] [Sections 11.10, 11.12.3, 11.12.3.1, 11.12.3.2, 11.12.3.4, and 14.1, ORD, [ID: RPT-OP-01-001 ID#1284], [ID: RPT-OP-01-001 ID#1303], [ID: RPT-OP-01-001 ID#1305], [ID: RPT-OP-01-001 ID#1307], [ID: RPT-OP-01-001 ID#1311], [ID: RPT-OP-01-001 ID#1469]]

Basis Discussion: Operation of equipment requiring remote control through the MHJ is operated in manual mode to the extent possible to reduce the need for high maintenance on automated equipment.

Verification: Verification is expected to be achieved through the following:

Verif. Method	Verif. By	Plan	Notes/Comments
I	ENG	Review LFH design to verify automation of repetitive sequences using sequence control and inclusion of manual mode for device operation outside of automatic mode.	

3.10.1.2.1 Limited Automation for Cranes and Hoists

Requirement: Cranes and hoists shall be designed with limited automation, as they will be primarily operated directly via the MHJ in manual mode or locally using local panels or control pendants. [Sections 11.10, 11.12.3.2, 11.12.3.6, and 14.16, ORD, [ID: RPT-OP-01-001 ID#1284], [ID: RPT-OP-01-001

ID#1307], [ID: RPT-OP-01-001 ID#1315], [ID: RPT-OP-01-001 ID#1567]] [Section 7.3.6, BOD, [ID: DB-ENG-01-001 ID#10590]]

Basis Discussion: Direct operation of cranes and hoists reduces the need for high maintenance on automated equipment.

Verification: Verification is expected to be achieved through the following:

Verif. Method	Verif. By	Plan	Notes/Comments
I	ENG	Review LFH design to verify cranes and hoists can be primarily operated directly and limited automation is provided.	

3.10.1.3 Local Mode

Requirement: LFH equipment operated under MHJ control shall have a local mode that allows direct actuation of the equipment from a local panel, pendant, or MCC, disregards MHJ commands and interlocks, maintains independent protection interlocks, and provides a local/remote status signal to the MHJ. The selection of local control will be logged by the control systems. Some equipment may not have any connection to the MHJ and will only be operated directly in local mode. Operator actions for this equipment will not be recorded by the MHJ. [Section 7.3.5.3, BOD, [ID: DB-ENG-01-001 ID#10586], [ID: DB-ENG-01-001 ID#10587]] [Sections 11.10 and 11.12.3.6, ORD, [ID: RPT-OP-01-001 ID#1284], [ID: RPT-OP-01-001 ID#1315]]

Basis discussion: Local mode allows equipment to be operated for maintenance/diagnostic purposes. Independent protection interlocks remain in-force to prevent mis-operation of equipment.

Verification: Verification is expected to be achieved through the following:

Verif. Method	Verif. By	Plan	Notes/Comments
I	ENG	Review design to verify required local mode features and functions are provided.	
D	SU/COM	Demonstrate the operability of local mode features and functions during operation from the local control panels or pendants.	

3.10.2 Nuclear Safety, ALARA, Environmental, and Other Regulatory Requirements

3.10.2.1 Container Surface Contamination Dose Rate Monitoring

Requirement: The LFH shall measure and monitor the removable surface contamination and the surface dose rate from a filled ILAW container before delivery for disposal. [Sections 3.2.3.2, 4.1.9.3, and 4.1.10, ILAW Compliance Plan, [ID: WTP-PL-RT-03-001 ID#10287], [ID: WTP-PL-RT-03-001 ID#10397], [ID: WTP-PL-RT-03-001 ID#10400]] [Section C.8 Specifications 2.2.2.9 and 2.2.2.10, DOE/BNI Contract, [ID: DE-AC27-01RV14136 Section C ID#248], [ID: DE-AC27-01RV14136 Section C ID#250]] [Sections 12.6.1 and 14.12, ORD, [ID: RPT-OP-01-001 ID#1407], [ID: RPT-OP-01-001 ID#1537]] (G.1)

Basis Discussion: Removable contamination on the external surfaces of the ILAW container shall be below the limits of 10 CFR 835. Surface dose rate of the ILAW container shall not exceed 500 mrem/hr. [ALARA]

Verification: Verification is expected to be achieved through:

Verif. Method	Verif. By	Plan	Notes/Comments
I	ENG	Review design to verify that the ILAW container surface dose rate is able to be measured and monitored.	
I	ENG	Review design to verify that the surface contamination on the ILAW container can be measured.	

3.10.3 System Interface Requirements

None

3.10.4 Other Technical, Specialty, Operations, and Maintenance Requirements

3.10.4.1 Cranes and Hoists

3.10.4.1.1 Standardized Operator Controls

Requirement: Control units for the LFH cranes shall be standardized with similar mechanical handling control units facility-wide. [Section 14.16, ORD, [ID: RPT-OP-01-001 ID#1555]]

Basis Discussion: Standardized operator controls are provided as much as possible to avoid errors that might occur when moving from one crane/hoist to another. Differences to accommodate specialized crane/hoist operations are acceptable.

Verification: Verification is expected to be achieved through the following:

Verif. Method	Verif. By	Plan	Notes/Comments
I	ENG	Review design and/or physical configuration to verify similar control units, including push-buttons on local control panels, pendants, and radio control units, are provided for similar cranes and hoists.	May be documented in a facility-wide assessment/report. Operations to participate in or review assessment.

3.10.4.2.1 Off-board Logics

Requirement: Cranes and hoists that enter C5/R5 areas shall have no on-board logic, and all power and signal cables shall be marshalled off-board. [Section 14.16, ORD, [ID: RPT-OP-01-001 ID#1552]]

Basis Discussion: On-board logic is permissible in normally accessible areas (C1/R1 to C3/R3). [ALARA]

Verification: Verification is expected to be achieved through the following:

Verif. Method	Verif. By	Plan	Notes/Comments
I	ENG	Review design of cranes and hoists in C5/R5 areas to verify power and signals cables are marshalled off-board, and devices that execute control logic are located off-board.	

3.10.4.2 Emergency Stop (E-Stop)

Requirement: Where operators will be co-located with operating equipment and physical injury is credible, dedicated emergency-stop (E-Stop) buttons shall be provided near the LFH equipment. The location of such stops will depend on the equipment's physical and operational characteristics. [Section 7.3.9.1, BOD, [ID: DB-ENG-01-001 ID#10620]] [Section 11.12.5.3, ORD, [ID: RPT-OP-01-001 ID#1348]]

Basis Discussion: Guidance for the application of E-stops for equipment at the WTP is provided in 24590-WTP-ES-J-11-001.

Verification: Verification is expected to be achieved through:

Verif. Method	Verif. By	Plan	Notes/Comments
A	ENG	Evaluate any potential credible events that may lead to operator injury for every piece of LFH MH equipment located in normally accessible areas to determine which equipment requires E-stops.	May be documented in an evaluation/ assessment report. Operations to participate in or review assessment.
I	ENG	Review of design to verify incorporation of emergency stops on equipment deemed to have a credible injury hazard.	
D	SU/COM	Demonstrate the capability to stop equipment using the equipment's dedicated emergency stop.	

3.10.4.3 Emergency Stop Reporting and Reset

Requirement: When the E-stops are activated, the LFH equipment shall remain in a shutdown state until the circuit is physically reset to prevent equipment restart while the dangerous condition exists. Each individual E-stop, however configured, shall report its status back to their respective control system. LFH equipment with MHJ connection shall report E-stop status both to the MHJ and to the local control system. LFH equipment with no MHJ connection shall only provide E-stop status to the local control

system. [Section 7.3.9.1, BOD, [ID: DB-ENG-01-001 ID#10621], [ID: DB-ENG-01-001 ID#10622]] [Section 11.12.5.3, ORD, [ID: RPT-OP-01-001 ID#1348]]

Basis Discussion: E-stops are normally implemented by Programmable Electronic System (PES) dedicated for that purpose. For systems with safety instrumented functions, E-stops may also be implemented in conjunction with related safety instrumented systems (for example, using an existing PPJ controller). There are no safety instrumented functions associated with LFH.

Verification: Verification is expected to be achieved through:

Verif. Method	Verif. By	Plan	Notes/Comments
I	ENG	Review LFH design to verify E-stops provide the appropriate status indication and remain in a shutdown state until the circuit is physically reset.	
D	SU/COM	Demonstrate E-stops reporting and reset functions.	

3.10.4.4 Accessibility for Calibration, Testing, and Inspection

Requirement: The LFH system design shall provide the capability to access and perform remote or direct calibration, periodic functional testing, and inspections of equipment and components during normal operation in areas that are ALARA. [Sections 6.7, 8.1.2, 9.12, and 12.6.3, BOD, [ID: DB-ENG-01-001 ID#10415], [ID: DB-ENG-01-001 ID#10698], [ID: DB-ENG-01-001 ID#11150], [ID: DB-ENG-01-001 ID#11736]] [Sections 9.1 and 11.16, ORD, [ID: RPT-OP-01-001 ID#1185], [ID: RPT-OP-01-001 ID#1186], [ID: RPT-OP-01-001 ID#1373]]

Basis Discussion: None. [ALARA]

Verification: Verification is expected to be achieved through the following:

Verif. Method	Verif. By	Plan	Notes/Comments
I	ENG	Review design to verify configurations that facilitate remote or direct calibration, periodic functional testing, and inspections of equipment in areas that are ALARA.	Document in an evaluation/assessment. Plant Engineering or Operations to participate in the evaluation or assessment.

3.11 Other LFH Equipment Requirements

3.11.1 Mission and Functional / Performance Requirements (Including States/Modes)

3.11.1.1 Container Lidding

Requirement: The LFH system shall lid and seal the filled ILAW container. [Sections 3.2.2.2, 4.1.1.3, and 4.1.12, ILAW Compliance Plan, [ID: WTP-PL-RT-03-001 ID#10277], [ID: WTP-PL-RT-03-001 ID#10308], [ID: WTP-PL-RT-03-001 ID#10419], [ID: WTP-PL-RT-03-001 ID#10421]] [Section C.6 Standard 5(g)(5)(iii) and Section C.8 Specification 2.2.2.12, DOE/BNI Contract, [ID: DE-AC27-01RV14136 Section C ID#436], [ID: DE-AC27-01RV14136 Section C ID#254]] (A.5)

Basis Discussion: The filled ILAW container is lidded and sealed prior to decontamination and swabbing.

Verification: Verification is expected to be achieved through:

Verif. Method	Verif. By	Plan	Notes/Comments
I	ENG	Review design to verify the LFH design is capable of lidding and sealing the ILAW container.	
D	SU/COM	Demonstrate lidding and sealing operations.	

3.11.1.2 Container Level Measurement and Inert Fill Addition

Requirement: The LFH system shall include provisions to measure the glass fill height using laser level measurement and add inert fill material from the GFR system when required. [Sections 4.1.1.3, 4.1.5.1, 4.1.5.2, and 4.1.5.3, ILAW Compliance Plan, [ID: WTP-PL-RT-03-001 ID#10308], [ID: WTP-PL-RT-03-001 ID#10340], [ID: WTP-PL-RT-03-001 ID#10342], [ID: WTP-PL-RT-03-001 ID#10345]] [Sections C.6 Standard 5(g)(5)(iii), C.8 Specification 2.2.2.5, DOE/BNI Contract, [ID: DE-AC27-01RV14136 Section C ID#436], [ID: DE-AC27-01RV14136 Section C ID#235]] (A.4, B.1)

Basis Discussion: The void space in the container shall not exceed 10% of the total internal volume at the time of filling, excluding void space internal to the glass waste form (e.g., small bubbles in the glass). After cooling, if necessary, the container shall be filled with suitable inert dry filler such that the void space meets the requirements of Dangerous Waste Regulation WAC 173-303-665 (12).

Verification: Verification is expected to be achieved through:

Verif. Method	Verif. By	Plan	Notes/Comments
I	ENG	Review design to verify the LFH design is capable of measuring the glass fill height using laser level measurement.	
I	ENG	Review design to verify the LFH design is capable of adding inert fill material.	
D	SU/COM	Demonstrate container level measurement and inert fill addition operations.	

3.11.2 Nuclear Safety, ALARA, Environmental, and Other Regulatory Requirements

3.11.2.1 Container Decontamination

Requirement: The LFH system shall be capable of decontaminating the surface of the ILAW containers using a CO_2 pellet spray decontamination system. [Sections 3.2.3.3, 4.1.10.1, and 4.1.10.3, ILAW Compliance Plan, [ID: WTP-PL-RT-03-001 ID#10289], [ID: WTP-PL-RT-03-001 ID#10402], [ID: WTP-PL-RT-03-001 ID#10406]] [Section C.6 Standard 5(g)(5)(iii), DOE/BNI Contract, [ID: DE-AC27-01RV14136 Section C ID#436]] (A.6, A.7, C.1, D.1)

Basis Discussion: Decontamination is performed by CO_2 pellets being shot at the container surface from end-effectors on the upper and lower power manipulators. The pellets sublimate when they contact the container. The PSA system provides the blast air that propels the pellets. [ALARA]

Verification: Verification is expected to be achieved through:

Verif. Method	Verif. By	Plan	Notes/Comments
I	ENG	Review design to verify the LFH design is capable of decontaminating the ILAW container surface using CO_2 pellets.	
D	SU/COM	Demonstrate decontamination operations.	Can be verified along with demonstration done in requirement 3.8.1.3

3.11.3 System Interface Requirements

None

3.11.4 Other Technical, Specialty, Operations and Maintenance Requirements

None

3.12 Posting Ports and Gloveboxes

The following requirements are applicable only for parts of the LFH system that have posting ports and/or gloveboxes.

3.12.1 Mission and Functional/Performance Requirements

3.12.1.1 Posting Ports

Requirement: The posting port shall provide the capability to transfer items which can be retrieved by the MSMs between the accessible manned areas and the swabbing and monitoring area. (A.10, A.12)

Basis discussion: Posting ports allow the transfer of vials containing glass shard samples, swabs, and decontamination wipes between manned accessible operating areas and high-dose, high-contamination areas. The posting port is connected to a glovebox and consists of a transport tray, in-cave and out-cave shield doors, and non-safety interlocks. [ALARA]

Verification: Verification is expected to be achieved through the following:

Verif. Method	Verif. By	Plan	Notes/Comments
I	ENG	Review the design to verify ability to import and export items through the posting port.	
D	SU/COM	Demonstrate the capability to transfer items through the posting port.	

3.12.1.2 Glovebox Construction

Requirement: The glovebox design shall contain no sharp edges. [Section 14.15, ORD, [ID: RPT-OP-01-001 ID#1547]]

Basis Discussion: Sharp edges or corners are areas for contamination to potentially be trapped or tear the flexible glovebox material. [ALARA]

Verification: Verification is expected to be achieved through the following:

Verif. Method	Verif. By	Plan	Notes/Comments
I	ENG	Review the design of the glove box to confirm that the design does not contain any sharp edges within a glovebox	May be documented in an evaluation/assessment.

3.12.1.3 Glovebox Pressure

Requirement: The LFH system shall include gloveboxes that are held at negative pressure relative to their room location. A differential pressure indicator shall be mounted to the gloveboxes. [Section 14.15, ORD, [ID: RPT-OP-01-001 ID#1547]]

Basis Discussion: Differential Pressure indicators mounted to the gloveboxes are tagged as C5V components. [ALARA]

Verification: Verification is expected to be achieved through:

Verif. Method	Verif. By	Plan	Notes/Comments
I	ENG	Review the design to verify the ability to maintain a negative internal pressure, relative to the surrounding room, through regulation of ventilation air flowing through the glovebox and into the cell or cave.	
I	ENG	Review the design to verify that a differential pressure indicator is mounted to the glovebox.	
T	SU/COM	Measure the pressure in the gloveboxes to verify that it is negative relative to the room environment.	May be performed during C5V verification activities

3.12.1.4 Glovebox Operator Design

Requirement: The LFH gloveboxes shall be designed and positioned for typical operator size and strength. [Section 14.15, ORD, [ID: RPT-OP-01-001 ID#1547]]

Basis Discussion: The glovebox is designed and positioned such that a typical operator can perform the required operations and reach all required equipment inside the glovebox. Design in accordance with human factors provisions of AGS-G001, Guideline for Gloveboxes, meets the requirement to design for a "typical" operator. [ALARA]

Verification: Verification is expected to be achieved through the following:

Verif. Method	Verif. By	Plan	Notes/Comments
I	ENG	Inspect the design to verify glove ports allow an operator of typical size and strength to perform all required operations within the limited space of the glovebox.	

3.12.1.5 Glovebox Materials

Requirement: The gloveboxes shall be designed to preclude the use of braided metal hosing, glass, or plastic, and minimize the volume of active pipe work. [Section 14.15, ORD, [ID: RPT-OP-01-001 ID#1547]]

Basis discussion: Usage of these materials increases the chance of puncturing a glove, so they are only used when justified. [ALARA]

Verification: Verification is expected to be achieved through the following:

Verif. Method	Verif. By	Plan	Notes/Comments
I	ENG	Review the design to verify braided metal hosing, glass, or plastic has suitable justification for its usage.	May be documented in an evaluation/assessment.

3.12.1.6 Glovebox Maintainable Items

Requirement: All of the glovebox maintainable items shall be accessible. Valves and instruments within the gloveboxes shall be labeled clearly. [Section 14.15, ORD, [ID: RPT-OP-01-001 ID#1547]]

Basis Discussion: All maintainable items in the glovebox are accessible. [ALARA]

Verification: Verification is expected to be achieved through the following:

Verif. Method	Verif. By	Plan	Notes/Comments
I	ENG	Review the glovebox design to verify access to all maintainable items.	
I	ENG	Review the glovebox design to verify that valves and instruments within the gloveboxes are labeled clearly.	
D	SU/COM	Demonstrate the ability to access maintainable items in the gloveboxes.	

3.12.1.7 Glovebox Environmental Design Conditions

Requirement: The LFH glovebox design shall take the impact of temperature, shielding, and environment (acid vapor and corrosion) into account. [Section 14.15, ORD, [ID: RPT-OP-01-001 ID#1547]]

Basis Discussion: None.

Verification: Verification is expected to be achieved through the following:

Verif. Method	Verif. By	Plan	Notes/Comments
I	ENG	Review the design to verify that it takes into account the impacts of temperature, shielding, and the environment of the LFH glovebox.	May be documented in an evaluation/assessment.

3.12.1.8 Prevent Release

Requirement: The air inlet to the glovebox shall be designed to preclude release of contamination to the surrounding room in the event of a loss of negative pressure or a pressure reversal in the glovebox. [Section 5.1.2, BOD, [ID: DB-ENG-01-001 ID#10259]]

Basis Discussion: Air is drawn through the glovebox by the facility ventilation system. The glovebox may contain an air inlet to regulate this airflow to maintain a negative pressure in the glovebox, relative to the room in which it resides. This air inlet is designed to preclude a release of contamination to the surrounding room in the event of a loss of negative pressure or a pressure reversal in the glovebox. [ALARA]

Verification: Verification is expected to be achieved through the following:

Verif. Method	Verif. By	Plan	Notes/Comments
I	ENG	Review the design to verify feature(s) are provided to preclude release of contamination to surrounding room on loss of negative pressure or pressure reversal.	May be documented in an evaluation/assessment.

3.12.1.9 Glovebox Fire Protection

Requirement: Gloveboxes shall be provided with automatic sprinkler systems. [Section 3.9.4, FHA-LAW, [ID: LAW-FHA-RAFP-FP-0001 ID#13247]]

Basis Discussion: DOE-STD-1066-97, Section 15, and National Fire Protection Association (NFPA) 801, as tailored in Appendix C of the SRD, require the gloveboxes to have automatic sprinklers.

Verification: Verification is expected to be achieved through the following:

Verif. Method	Verif. By	Plan	Notes/Comments
I	ENG	Review of design to verify provision of automatic sprinkler system in the LFH gloveboxes.	May be documented in an evaluation/assessment.

3.12.1.10 Glovebox Design

Requirement: The LFH glovebox shall provide the capability to import and use portable instruments or probes within the glovebox, including those used to measure the contamination levels of swabs or components that have been brought into the glovebox. (A.10, A.12)

Basis Discussion: Preliminary or go/no-go contamination measurements may be taken inside the glovebox using small portable instruments. [ALARA]

Verification: Verification is expected to be achieved through the following:

Verif. Method	Verif. By	Plan	Notes/Comments
I	ENG	Review the design to verify the capability to import and use portable instruments within the glovebox.	
D	SU/COM	Demonstrate the ability to import and use portable instruments within the glovebox.	

3.12.2 Nuclear Safety, ALARA, Environmental, and Other Regulatory Requirements

None

3.12.3 System Interface Requirements

None

3.12.4 Other Technical, Specialty, Operations, and Maintenance Requirements

None

3.13 Relevant Codes and Standards

3.13.1 Codes of Record

Table 3-1 identifies relevant external codes and standards applicable to the LFH design. These are selected from those documents that comprise the Code of Record (COR) as established in 24590-WTP-RPT-ENG-01-001, Technical Baseline Description, i.e., the WTP Contract, the Basis of Design (BOD), and the Safety Requirements Document Volume II (SRD). Use of these documents is typically invoked in the design process through the documents identified in Section 3.13.2. Beyond inclusion here, no

attempt is made in this document to extract individual design requirements from these documents for allocation to SSCs.

In some cases the expected means of verification may be established on the basis of tests or other criteria required by the codes and standards. This does not necessarily include verification or testing more appropriately defined in the procurement of individual sub-systems or components, or which is a routine activity defined by specifications and/or procedures used by construction and startup.

Table 3-1 – LFH Applicable Codes & Standards

Implementing Codes and Standards: [Contract No. DE-AC27-01RV14136, WTP Contract]
• Not applicable
Implementing Codes and Standards: [24590-WTP-DB-ENG-01-001, Rev 2, Basis Of Design]
• 29 CFR 1910, *Occupational Safety and Health Standards*
• ANSI/AISC N690, Specification for the Design, Fabrication, and Erection of Steel Safety-Related Structures for Nuclear Facilities
• ASME B30.2, Overhead and Gantry Cranes (Top Running Bridge, Single or Multiple Girder, Top Running Trolley Hoist)
• ASME B30.11, Monorails and Underhung Cranes
• ASME B30.16, Overhead Hoists (Underhung Cranes)
• CMAA 70, Crane Manufacturers Association
• AWS D1.1, *Structural Welding Code – Steel*
• AWS D1.6, *Structural Welding Code – Stainless Steel*
Implementing Codes and Standards: [24590-WTP-SRD-ESH-01-001-02, Rev 7, Section 4, SRD]
• AISC M016-89, *ASD Manual of Steel Construction*
• IESNA RP-7 (2002), *Industrial Lighting*
• NFPA 70-1999, *National Electrical Code*
• UBC 1997,*Uniform Building Code*
• DOE-STD-1020-94, *Natural Phenomena Hazards Design and Evaluation Criteria for Department of Energy Facilities*

3.13.2 WTP Design Criteria, Design Guides, and General Specifications Applicable to LFH

Table 3-2 identifies relevant discipline design criteria, guides, and general specifications applicable to the LFH. Use of these documents to develop the detailed design of SSCs is governed by engineering procedures. The majority of requirements contained within these documents are derived from external codes and standards or are specified methods and approaches to achieve standardization and consistency of design. Beyond inclusion here, no attempt is made in this document to extract individual design requirements from these documents for tracing and verification, or to define how direction provided by these documents is applicable and allocated (or not) to individual SSCs.

Table 3-2 – WTP Design Criteria, Design Guides, and General Specifications Applicable to LFH

Document Number	Title
Design Criteria Documents:	
24590-WTP-DC-M-06-001	Mechanical Systems Design Criteria

Document Number	Title
24590-WTP-DC-E-01-001	Electrical Design Criteria
24590-WTP-DC-ENG-06-001	Design Criteria for Environmental and Natural Phenomena Hazard Qualification of Structures Systems and Components
24590-WTP-DC-ST-04-001	Seismic Analysis and Design Criteria
Design Guides:	
24590-WTP-GPG-ENG-086	Equipment Environmental Qualification
24590-WTP-GPG-ENG-0099	Design Verification of Plant Design Deliverables
24590-WTP-GPG-ENG-0103	Equipment Seismic Qualification
24590-WTP-GPG-ENG-0109	Accessibility Review of Equipment and Components
24590-WTP-GPG-ENG-0119	Isometric Drawings Production
24590-WTP-GPG-ENG-0141	WTP Radiation Damage Thresholds for Non-Metallic Materials
24590-WTP-GPG-ENG-0150	Plant Design/Mechanical Systems Equipment Interfaces: Terminal End Equipment
24590-WTP-GPG-J-005	Control Systems Interfaces
24590-WTP-GPG-J-014	Control Systems Design Process Guide
24590-WTP-GPG-J-017	WTP Seismic Category Application to C&I Systems
24590-WTP-GPG-M-036	Determining Quality Level and Seismic Category Classification of Sub-Components, Assemblies, Sub-Assemblies, and Parts
24590-WTP-GPG-M-052	Specifying Design Cycles for Equipment and Piping
24590-WTP-GPG-PL-002	Plant Design Material Control Guide
24590-WTP-GPG-SRAD-001	Design Guide for ALARA
Specifications:	
24590-WTP-3PS-MJKH-T0002	Engineering Specification for Process Monorail Hoists
24590-WTP-3PS-MJKG-T0002	Engineering Specification for CMAA 74 & CMAA 70 Top Running & Under Single/Multiple Girder Cranes
24590-WTP-3PS-G000-T0015	Engineering Specification for Environmental Qualification of Mechanical Equipment
24590-WTP-3PS-JQ00-T0004	Engineering Specification for Management of Supplier Software
24590-WTP-3PS-JQ00-T0005	Engineering Specification for Management of Supplier Safety Software
24590-WTP-3PS-JQ06-T0005	Engineering Specification for Environmental Qualification of Control and Electrical Systems and Components
24590-WTP-3PS-JQ07-T0001	Engineering Specification for Instrumentation for Package Systems
24590-WTP-3PS-JQ08-T0001	Engineering Specification for Construction and Installation of Controls and Instrumentation
24590-WTP-3PS-MJKH-T0001	Engineering Specification for Commercial Quality Monorail Hoists, Jib Cranes, and Under-Running Single Girder Cranes
24590-WTP-3PS-FB01-T0001	Engineering Specification for Structural Design Loads for Seismic Category III & IV Equipment and Tanks

4 System Description

This section summarizes design output information, describing the current design and the operational and maintenance aspects of the system. The information provided below does not contain design requirements and should not be used as design input. The description of the current design contained in this section may not fully align with design requirements. This is acceptable within the context of this document. Areas of misalignment are to be resolved through appropriate mechanisms and the System Design Description (SDD) updated to reflect changes made to the design. Changes to the descriptive text will be made following the changes to the lower tiered Engineering documents.

4.1 Configuration Information

The Low Activity Waste (LAW) Container Finishing Handling (LFH) system performs the following functions to prepare the LAW container for export:

- Receive filled LAW container from the LAW Container Pour Handling (LPH) system [3.4.1.5]
- When required, obtain glass shard samples [3.8.1.1]
- Measure glass level in the container [3.11.1.2]
- If glass level is below 90% contract minimum, add inert fill material (glass former) [3.11.1.2]
- Install lid to seal the container [3.11.1.1]
- Decontaminate the container exterior surfaces using CO_2 pellets from the Carbon Dioxide Gas (CDG) system [3.11.2.1]
- Swab the container exterior to confirm surface contamination meets acceptance limits [3.10.2.1]
- Measure container external surface gamma radiation [3.10.2.1]

The LFH system is composed of two finishing lines at the +3 ft elevation in the southeast corner of the LAW Facility. The North line is located in rooms L-0109D/C/B/E. The South line is located in rooms L-0115D/C/B/E. A line transfer station in room L-0217C (located above L-0109C and L-0115C) at the +28 ft elevation can be used to transfer containers between the North and South lines during off-normal conditions.

The LFH system includes the following major equipment:

- Lidding Area (L-0109D/0115D): Trap Door, Lidding Bogie, Monorail Hoist, Jib Cranes, Shard Tray, Shard Pickup Assembly, Inert Fill Hopper, Lid Press, Lid Magazines, Lid Recovery Tool, Seal Prep Tool, Shield Windows, Master Slave Manipulators, Posting Port and Glovebox
- Decontamination Area (L-0109C/0115C): Decontamination Bogie, Upper and Lower Power Manipulators, Decontamination Turntable, Dual Rail Hoist, Shield Window
- Swabbing Area (L-0109B/0115B): Swabbing Bogie and Turntable, Power Manipulator, Dual Rail Hoist, Shield Window, Posting Port and Glovebox
- Monitoring/Export Area (L-0109E/0115E): Trap Door, Bogie Recovery System, Radiation Monitor
- Line Transfer Station (L-0217C): Trap Doors, Monorail Hoist

Equipment can be maintained in place after the LAW container has been removed. Platforms are provided to access equipment. All maintenance is hands on [3.4.4.2]. A failed bogie can be retrieved into the monitoring/export area for maintenance. Failed equipment can also be transported on the bogie to the decontamination area, where it is removed by the line transfer station. A shielding door separates the lidding area and decontamination area. Confinement doors separate the decontamination area, swabbing area and monitoring/export area. See Figure 4-1 for system general layout.

Figure 4-1 - LAW Finishing Line Simplified Diagram

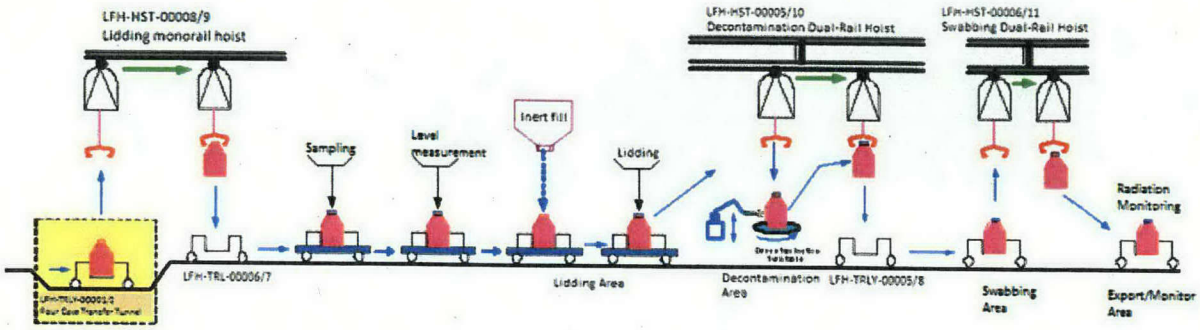

4.1.1 Description of System, Subsystems, and Major Components

The following sections describe the major equipment components in System LFH. All components are rated non-safety and seismic category SC-IV (24590-LAW-M0X-M40T-00005) [3.4.1.3].

4.1.1.1 Sampling Station Equipment

The Sampling Station is located in the lidding area (L-0109D/0115D) and includes the following components.

4.1.1.1.1 Shard Table

Component Tag Number: 24590-LAW-JA-LFH-SMPLR-00002 (North)
Component Tag Number: 24590-LAW-JA-LFH-SMPLR-00004 (South)
Refer to: 24590-LAW-3PS-M000-T0006, *Engineering Specification for Shard Sampling System – Low Activity Waste Vitrification Facility*

The shard table (shard sampling table) is on the west wall of the lidding area. The shard tray (LFH-SMPLR-00005/00003) is mounted on the shard table. The table provides a convenient work surface for the sampling station manipulators.

Figure 4-2 - Shard Table

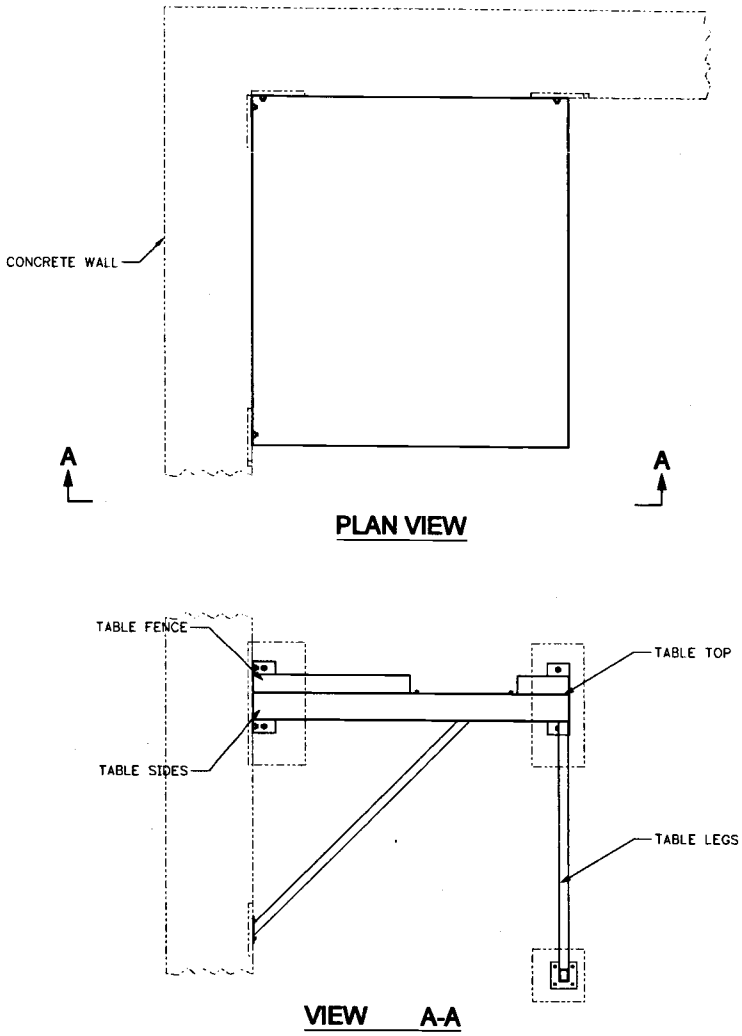

4.1.1.1.2 Shard Tray

Component Tag Number: 24590-LAW-JA-LFH-SMPLR-00005 (North)
Component Tag Number: 24590-LAW-JA-LFH-SMPLR-00003 (South)
Refer to: 24590-LAW-3PS-M000-T0006, *Engineering Specification for Shard Sampling System – Low Activity Waste Vitrification Facility*

The shard tray (shard sampling tray) is used to measure the glass level in the container. The shard tray consists of a stationary base frame and a movable extension tray. A motor drive on the base frame extends the tray across the container flange and opening. A distance transducer (laser distance meter) and mirror, which are mounted on the extension tray, measures the distance to the container flange and the distance to the glass surface at 30 points as the tray traverses across the container opening.

The LAW container has a 36 in. dia flange with a 15.375 in. dia opening. The servomotor, encoder and home proximity switch enable the tray to travel and stop at 33 positions. The positions are: 1 (container flange), 2 to 31 (glass surface at 0.5 in. intervals), 32 (home) and 33 (shard sampling).

The extension tray also holds 3 shard sample vials. Above the vials is a hinged plate with 3 funnels, which direct the glass shards from the shard pick-up assembly (LFH-SMPLR-00001/00008) into each vial. After the vials are filled, the hinged plate is flipped over to empty any shards in the funnels or tray into the container.

The shard tray is mounted on the shard table. The shard tray major components include a drive and motor, distance transducer, sample vial holder, electrical instrumentation and interlocks. (24590-CM-POA-M000-00006-06-00041)

Figure 4-3 - Shard Tray

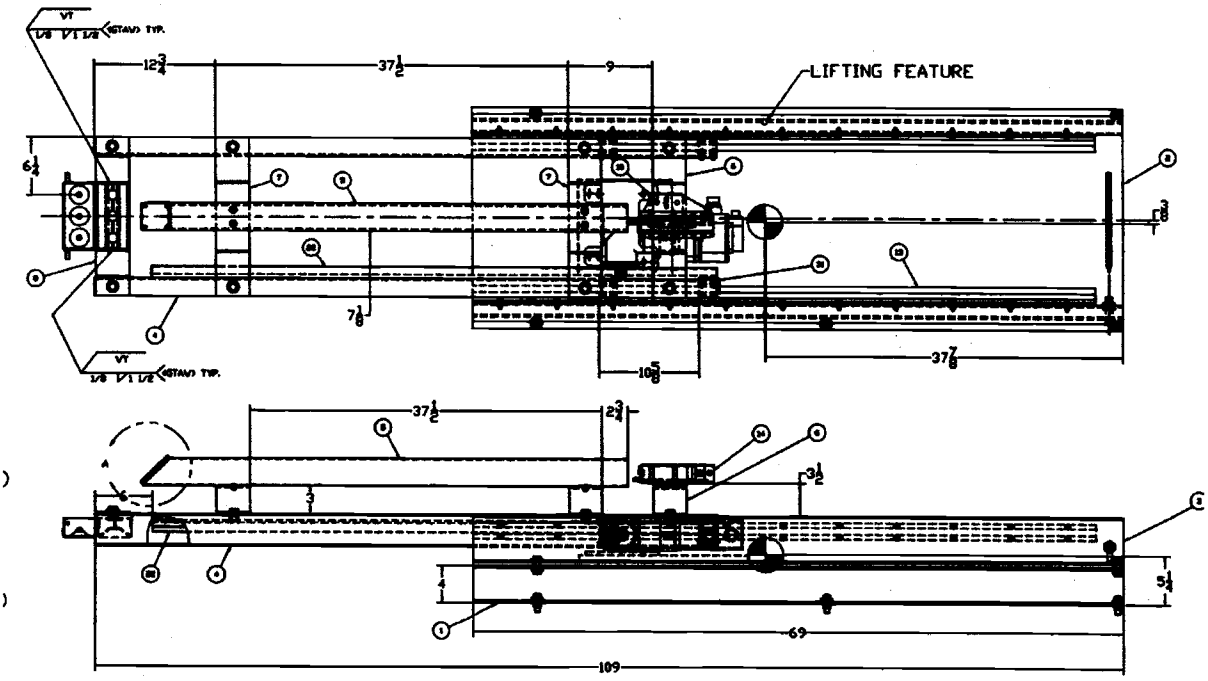

4.1.1.1.3 Shard Pickup Assembly

Component Tag Number: 24590-LAW-JA-LFH-SMPLR-00001 (North)
Component Tag Number: 24590-LAW-JA-LFH-SMPLR-00008 (South)
Refer to: 24590-LAW-3PS-M000-T0006, *Engineering Specification for Shard Sampling System – Low Activity Waste Vitrification Facility*

The shard pickup assembly (shard sampling pickup) is used to collect glass shard samples from the glass surface of filled containers. The shard pickup assembly includes a vacuum eductor, filter, screen and pickup nozzle. They are attached to a retractable tether and suspended from a manual jib boom located above and to the west of the sampling station shield window. Plant service air is supplied to the eductor to generate vacuum.

The sampling station MSM uses the pickup nozzle (or a tool to be determined) to strike the glass surface, which generates the shards. The pickup nozzle vacuums the shards onto a screen inside the nozzle. The shards are discharged by positioning the pickup nozzle over a shard tray funnel, turning off the plant service air, and letting the shards fall into the sample vial.

The shard pickup assembly includes the following: manually operated jib boom and retractable tether, 3-way air valve, back flush air valve, vacuum eductor, filter and pickup nozzle. (24590-CM-POA-M000-00006-06-00061)

Figure 4-4 - Shard Pickup Assembly

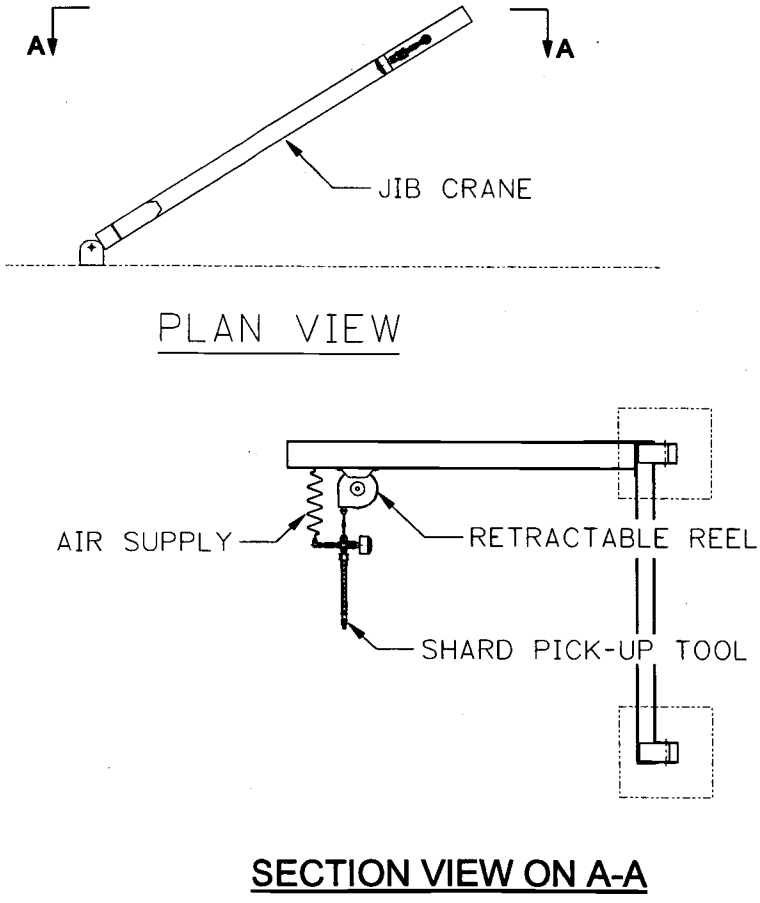

4.1.1.1.4 Sample Vial Holder

Component Tag Number: 24590-LAW-MJ-LFH-LID-00015 (North)
Component Tag Number: 24590-LAW-MJ-LFH-LID-00016 (South)
Refer to: 24590-LAW-3PS-M000-T0006, *Engineering Specification for Shard Sampling System – Low Activity Waste Vitrification Facility*

The sample vial holder is used for staging of 36 shard sample vials. It is removable and is located on the MSM tool tray. The sample vials are 1 in. dia x 2.25 in. high. The vial neck is 0.5 in. ID x 1 in. OD (24590-LAW-3PS-M000-T0006).

4.1.1.1.5 MSM Tool Tray

Component Tag Number: 24590-LAW-MJ-LFH-MANIP-00003 (North)
Component Tag Number: 24590-LAW-MJ-LFH-MANIP-00005 (South)
Refer to: 24590-LAW-3PS-M000-T0006, *Engineering Specification for Shard Sampling System – Low Activity Waste Vitrification Facility*

The MSM tool tray is located under the sampling station shield window. It serves as a storage location for MSM vacuum tool (LFH-TOOL-00007/00008) wand and the sample vial holder (LFH-LID-00015/00016). It is also a temporary location for MSM tools used for minor repair and maintenance of equipment.

The MSM tool tray is a metal shelf with low/inclined lips or other means of retaining tools or fixtures but minimizes trapping contamination. The tray is also easily decontaminated.

Figure 4-5 - MSM Tool Tray

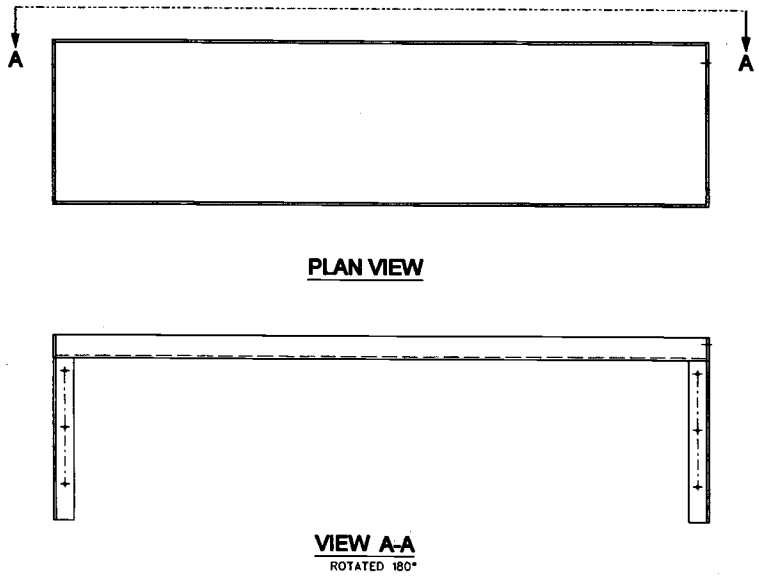

4.1.1.2 Inert Fill Station Equipment

The Inert Fill Station is located in the lidding area (L-0109D/0115D) and includes the following components.

4.1.1.2.1 Inert Fill Hopper

Component Tag Number: 24590-LAW-MH-LFH-MHAN-00002 (North)

Component Tag Number: 24590-LAW-MH-LFH-MHAN-00004 (South)
Refer to: 24590-LAW-3PS-HCHH-T0002, *Engineering Specification for Special Inert Fill Hoppers – Low Activity Waste Vitrification Facility*

The inert fill hopper is used to add inert material to LAW containers whose glass level is low. The contract requires the void space in the container to not exceed 10% of the internal volume of the container (24590-WTP-PL-RT-03-001 Sect 4.1.5). The inert material is the glass former material that is fed to the melters. The inert fill hopper is located at the inert fill station, just east of the sampling station.

The inert fill hopper is gravity fed from a Glass Formers Reagent (GFR) System day hopper (GFR-TK-00027/00026) located above the finishing line. When a container requires inert fill, the volume and weight of solids required is calculated by the Integrated Control Network (ICN). The GFR day hopper meters the required amount into the inert fill hopper.

The lidding bogie raises the LAW container to seal it to the inert fill hopper. The hopper discharge flange has a gasket that compresses to form a dust-tight seal. The hopper has a container present switch, which confirms the container is present and sealed. The inert fill hopper is activated to feed the solids into the container. The hopper has a vibrator to promote flow, a rotary valve to feed material at a controlled rate, and a spreader that rotates to fling the material horizontally to fill the LAW container without mounding.

The hopper is a 14 inch dia by 84 inch high pipe with a cone bottom and a 6 inch rotary valve. The hopper has a 7.2 ft3 capacity and the rotary valve feed rate is 0.925 ft3/min. The material flows from the rotary valve to the rotary spreader, which extends slightly into the container neck. The vibrator, rotary valve and spreader are motor operated. The hopper flange has a vent line that allows displaced air to flow from the container vapor space to the hopper vapor space. (24590-CM-POA-HCHH-00001-01-00064)

Figure 4-6 - Inert Fill Hopper

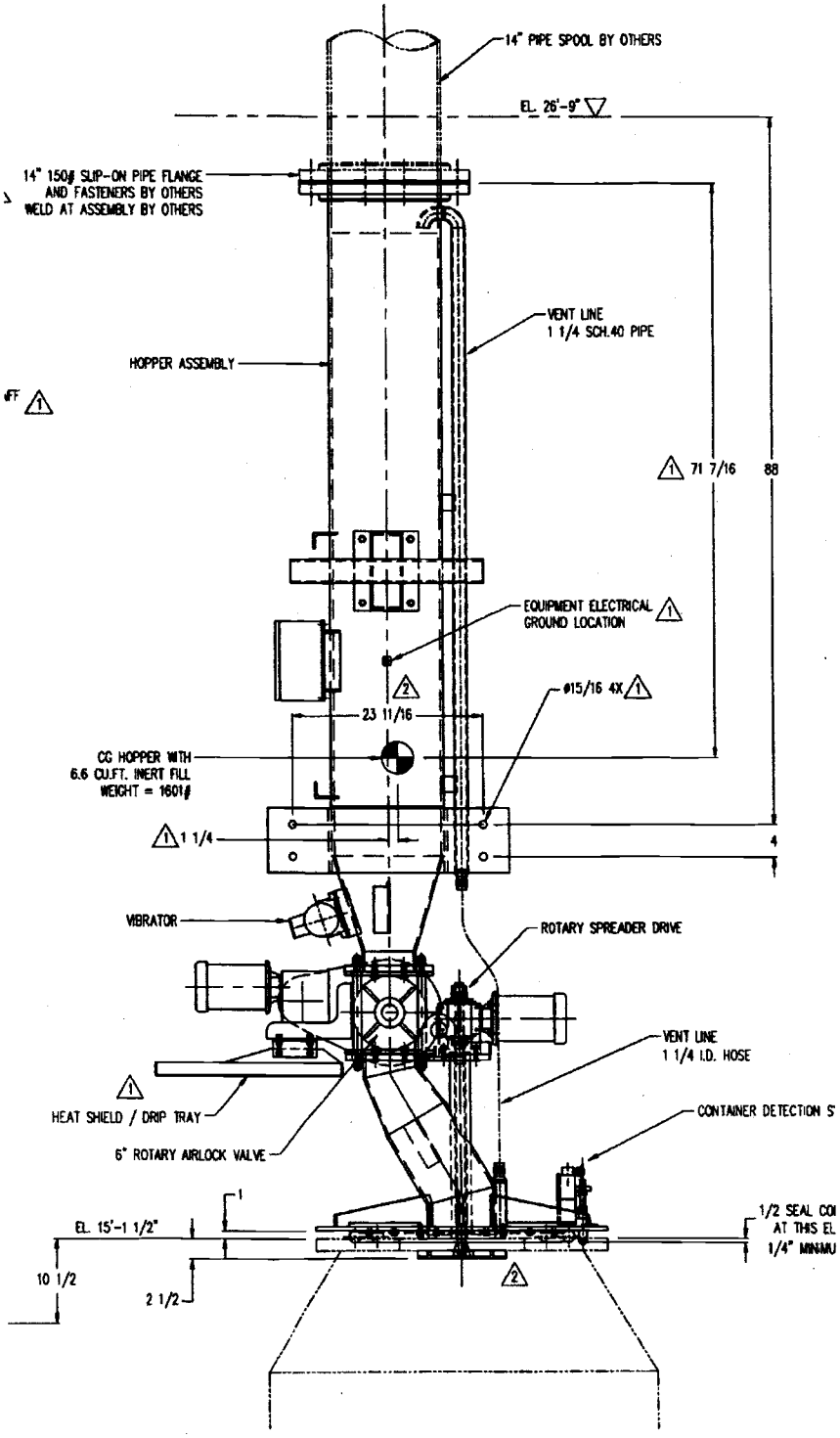

4.1.1.2.2 MSM Vacuum Tool

Component Tag Number: 24590-LAW-FH-LFH-TOOL-00007 (North)
Component Tag Number: 24590-LAW-FH-LFH-TOOL-00008 (South)
Refer to: 24590-LAW-3PS-M000-T0006, *Engineering Specification for Shard Sampling System – Low Activity Waste Vitrification Facility*

The MSM vacuum tool is used to remove inert fill material in the container flange sealing area and groove. It is also used to remove excess material should a container become overfilled with inert fill material.

The MSM vacuum tool is a commercial dry vacuum cleaner. It includes the base unit (collection tank with disposable filter bag, motor operated vacuum blower, high efficiency particulate air [HEPA] filter), hose and wand. The wand is a tube that has been modified to facilitate handling by the MSM. The sampling station MSM uses the wand to vacuum inert fill material in the container. The base unit is located below the shard table. The wand is stored on the MSM tool tray.

4.1.1.3 Lidding Station Equipment

The Lidding Station is located in the lidding area (L-0109D/0115D) and includes the following components.

4.1.1.3.1 Lid Press

Component Tag Number: 24590-LAW-HC-LFH-LID-00025 Lid Press (North)
Component Tag Number: 24590-LAW-HC-LFH-LID-00026 Lid Press (South)
Component Tag Number: 24590-LAW-HC-LFH-MHAN-00018 Cable Management System (North)
Component Tag Number: 24590-LAW-HC-LFH-MHAN-00020 Cable Management System (South)
Refer to: 24590-LAW-3PS-HCTH-T0001, *Engineering Specification for Product Container Lidding System*

The lid press is used to insert and seal the lid to the container. The lid press is suspended from the lidding jib crane (LFH-CRN-00006/00003), which moves the lid press between its parking stand (LFH-LID-00027/00028), lid magazine B (LFH-LID-00035/00036), lid magazine (LFH-LID-00023/00024) and the container lidding position. The LAW container, which is not supplied by system LFH, is described below.

The LAW container is 48 in. dia x 90 in. overall height. The container top head has a 30 in. OD neck. The top flange is 36 in. OD with a 15.375 in. dia opening. The empty container is about 1600 lb and the lid weighs about 45 lb. Container volume is about 84.3 ft3. The lid has 3 spring-loaded, locking latches. The latches and container flange have a beveled edge, such that the latches retract as the lid is inserted and then the latches extend to engage a machined groove in the container flange. (24590-LAW-M0-LRH-00004001 to 4004)

Each latch has a vertical shoulder bolt to visually indicate the latch position. When the latch is fully extended into the flange groove, the bolt lines up with a painted line on the lid. The shoulder bolts can be engaged to retract the latches to remove a failed lid. The bottom of the lid has a metal e-ring gasket that compresses to form a seal between the lid and flange. The container top surface temperature can be up to 340°F, so lidding equipment have heat shields or cooling air where needed. (24590-LAW-M0-LRH-00004001 to 4004)

The lidding jib crane places the lid press onto a lid magazine and retrieves a container lid. The jib crane moves the lid press over the container and lowers the lid press onto the container flange. The lid press self-centers when placed on the container. The lid press pneumatic actuated lugs are activated to clamp the lid press to the container flange.

The lid press servomotor lowers the lid to the insertion position. The three spring loaded latches in the lid retract and the servomotor pushes the lid downward in small indexing movements. As the lid moves downward, the lid gasket compresses against the container and the insertion force increases. The operator monitors the insertion force and distance via the ICN, and uses the closed circuit television (CCTV) to view the latch shoulder bolts after lidding. At about 4000 lb force, the gasket has compressed sufficiently for the latches to extend and snap into a groove in the flange. The vacuum cup is deactivated, the servomotor raises the press to the home position, and the clamping lugs are disengaged. (24590-CM-POA-HCTH-00001-09-00014)

The servomotor can apply up to 10,000 pounds of force. To prevent damage, the insertion process is stopped if the force limit (to be determined) is reached before all three latches have engaged. (24590-CM-POA-HCTH-00001-09-00014) Plant service air is supplied to the clamping pneumatic actuators, vacuum 51ducator, junction box vortex cooler, and to the servo encoder for cooling.

The lid press incorporates the following: electrically operated compression press, drive and servomotor, pneumatically operated clamping lugs, vacuum 51ducator and suction cup to hold the lid, control junction box, servoencoder, load cell to measure lid insertion force, electrical instrumentation and interlocks. A cable management system is employed utilizing a jib boom and articulated segmented joints covering the air, signal, and power lines to the lid press. This allows the lid press to be moved between the lid magazine and the container lidding position without interference or contact with the container. The lid press may be maintained in-cell on its parking stand or removed for repair.

Figure 4-7 - Lid Press

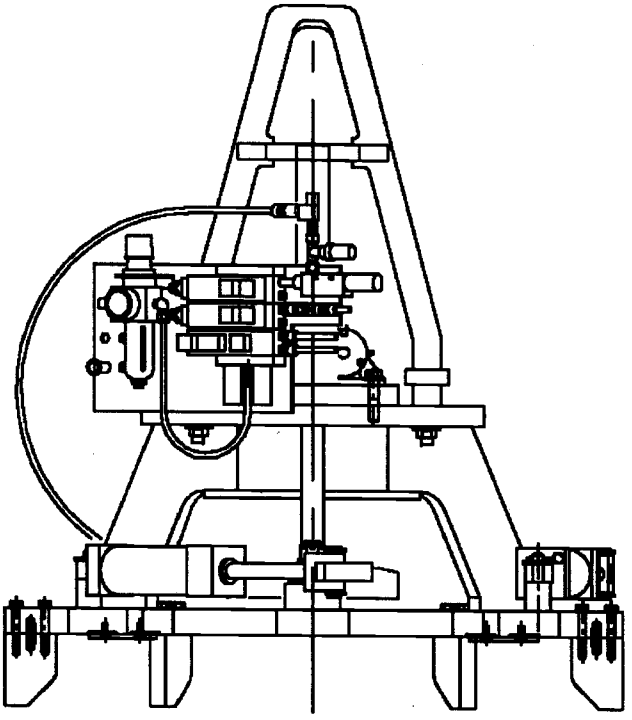

4.1.1.3.2 Lid Magazine

Component Tag Number: 24590-LAW-HC-LFH-LID-00023 (North)
Component Tag Number: 24590-LAW-HC-LFH-LID-00024 (South)
Refer to: 24590-LAW-3PS-HCTH-T0001, *Engineering Specification for Product Container Lidding System*

The lid magazine stores lids with integral gaskets in a vertical stack arrangement. It is located on the arc of the lidding jib crane, at the same radius as the container lidding position, lid magazine B and lid press parking stand. The lid magazine holds a stack of 35 lids. (24590-CM-POA-HCTH-00001-09-00014)

The lidding jib crane places the lid press on the lid magazine. The lid press pneumatic actuated lugs are activated to clamp the lid press to the lid magazine. The lid press servomotor lowers the press to the lid capture position. The lid magazine motor drive indexes the lid stack upward. The lid press indexes downward and the vacuum cup is activated to retrieve a lid. The lid press rises to the home position and the clamping lugs are disengaged.

The lid magazine assembly consists of a lid magazine stand and a lid magazine. The lid magazine has a sensor to transmit an empty signal to the ICN. To refill the lid magazine, the motor drive lowers the lid magazine to the home position. The lidding jib crane removes the lid magazine from the lid magazine

stand. The lid magazine is transferred to the line transfer station, where it is decontaminated if needed. The lid magazine is moved into the maintenance area (L-0217A), where it is reloaded with lids. The mechanical assistance to load the magazine is to be determined (tracked by 24590-WTP-ATS-MGT-15-0365).

4.1.1.3.3 Lid Magazine B

Component Tag Number: 24590-LAW-HC-LFH-LID-00035 (North)
Component Tag Number: 24590-LAW-HC-LFH-LID-00036 (South)
Refer to: 24590-LAW-3PS-HCTH-T0001, *Engineering Specification for Product Container Lidding System*

Lid Magazine B is identical to the lid magazine and provides additional storage capacity for lids in the finishing line. Lid magazine B is located on the arc of the lidding jib crane, at the same radius as the container lidding position, lid magazine and lid press parking stand.

Figure 4-8 - Lid Magazine

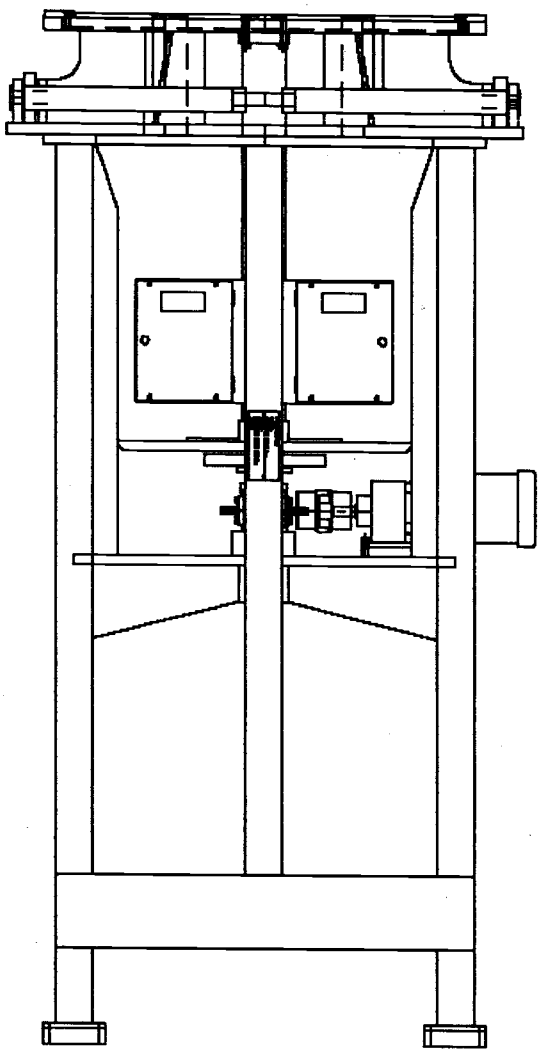

4.1.1.3.4 Lid Press Parking Stand

Component Tag Number: 24590-LAW-HC-LFH-LID-00027 (North)
Component Tag Number: 24590-LAW-HC-LFH-LID-00028 (South)
Refer to: 24590-LAW-3PS-HCTH-T0001, *Engineering Specification for Product Container Lidding System*

The lid press parking stand serves as temporary storage location for the lid press, which is normally suspended from the lidding jib crane. The stand is located on the arc of the lidding jib crane, at the same radius as the container lidding position and lid magazines. When an empty lid holder needs to be changed out, the lid press is parked on the stand and the lidding jib crane is used to remove the lid holder. The lid press is also parked on the stand during in-cell maintenance of the press.

The lid press parking stand is similar to the top of a LAW container, so that the lid press will locate and self-center when lowered by the lidding jib crane. The stand height is low, which facilitates personnel access to the lid press during in-cell maintenance.

Figure 4-9 - Lid Press Parking Stand

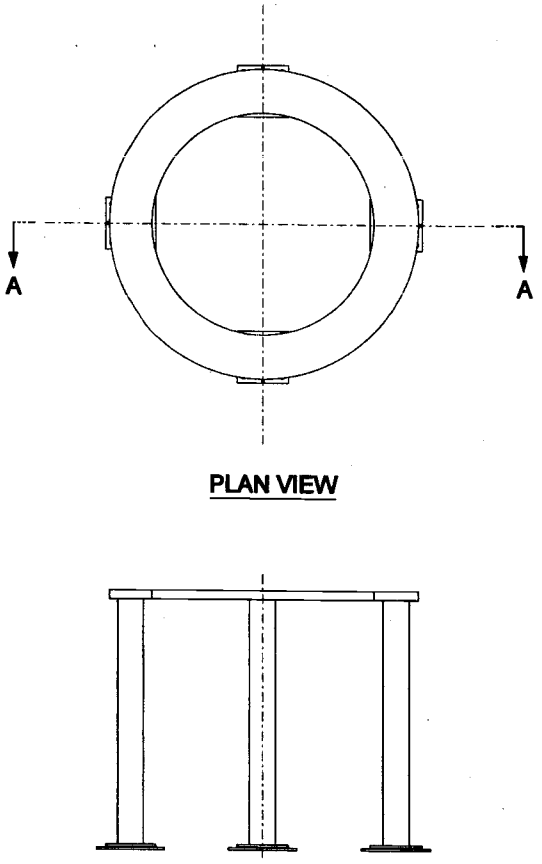

4.1.1.3.5 Lid Recovery Tool

Component Tag Number: 24590-LAW-HC-LFH-LID-00029 Lid Recovery Tool (North)
Component Tag Number: 24590-LAW-HC-LFH-LID-00030 Lid Recovery Tool (South)
Component Tag Number: 24590-LAW-HC-LFH-MHAN-00017 Cable Management System (North)
Component Tag Number: 24590-LAW-HC-LFH-MHAN-00019 Cable Management System (South)
Refer to: 24590-LAW-3PS-HCTH-T0001, Engineering Specification for Product Container Lidding System

The lid recovery tool is used to extract a failed lid, which means one or more of the three lid latches failed to extend and engage the container flange groove. The lid recovery tool is suspended from the sealing jib crane (LFH-CRN-00007/00004), which moves the lid recovery tool between its parking stand (LFH-LID-00031/00032) and the container lidding position. The sealing jib crane and lid recovery tool are located east of the lidding station. The lid recovery tool supplier states it is not to be used to extract a fully engaged lid (i.e. all 3 latches engaged in container flange groove).

The lid recovery tool, which is similar to the lid press, has a mechanism to retract the lid latches. The lid recovery tool is placed on the container and pneumatically clamped to the flange. The lid recovery tool lowers to the recovery position and indexes downward until the orientation load set point is reached. The

lidding station MSM rotates levers on the lid recovery tool to engage the lid latch shoulder bolts. The lid recovery tool pneumatic cylinders are activated to apply a horizontal force to each shoulder bolt.

The servomotor indexes the lid downward. When the downward force on the lid overcomes the upward force the lid and gasket exerts on the latches, the horizontal force on the shoulder bolts retracts the latches. The lid suction cup is activated. The recovery tool is raised to the home position and the clamping lugs are disengaged.

The sealing jib crane places the recovery tool onto its parking stand and the recovery tool deposits the failed lid on the parking stand. The sealing jib crane moves the recovery tool away from the parking stand. (24590-CM-POA-HCTH-00001-09-00014)

The lid recovery tool's major components are identical to the lid press, with the addition of three pneumatic cylinders and linkage that engage the lid shoulder bolts. A cable management system is employed utilizing a jib boom and articulated segmented joints covering the air, signal, and power lines to the lid recovery tool.

Figure 4-10 - Lid Recovery Tool

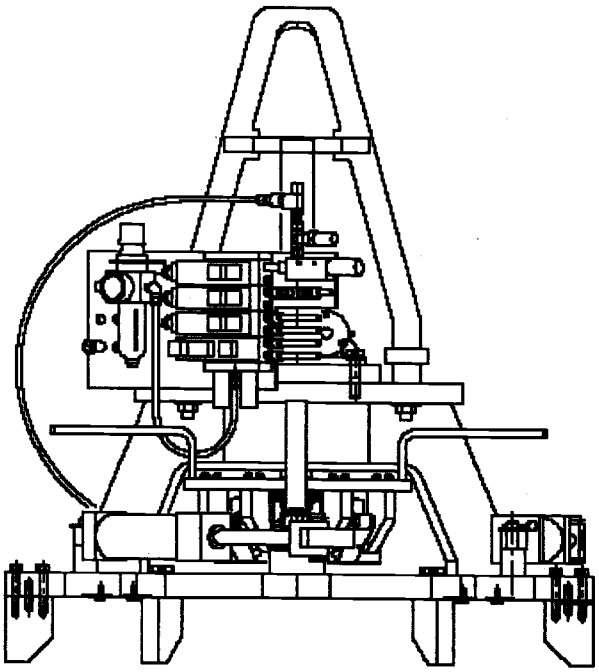

4.1.1.3.6 Lid Recovery Tool Parking Stand

Component Tag Number: 24590-LAW-HC-LFH-LID-00031 (North)
Component Tag Number: 24590-LAW-HC-LFH-LID-00032 (South)
Refer to: 24590-LAW-3PS-HCTH-T0001, *Engineering Specification for Product Container Lidding System*

The lid recovery tool parking stand serves as temporary storage location for the lid recovery tool, which is normally suspended from the sealing jib crane. The stand is located on the arc of the sealing jib crane, at the same radius as the container lidding position. The lid recovery tool deposits the failed lid on the parking stand. The lid recovery tool is parked on the stand during in-cell maintenance of the tool. The design of the stand is nearly identical to the lid press parking stand.

4.1.1.3.7 Seal Prep Tool

Component Tag Number: 24590-LAW-HC-LFH-LID-00039 (North)
Component Tag Number: 24590-LAW-HC-LFH-LID-00040 (South)
Refer to: 24590-LAW-3PS-HCTH-T0001, *Engineering Specification for Product Container Lidding System*

The seal prep tool is a motor driven, stainless steel wire brush that is used (if needed) to clean the seal seating area on the container flange. The tool is deployed by the lidding station MSMs and is stored on the lidding tool tray at the lidding station. The tool brush head has a vacuum shroud, which collects particulates from brushing. A hose connects the shroud to a motor operated vacuum cleaner (with HEPA filtration), which is mounted on the wall. (24590-CM-POA-HCTH-00001-09-00186 and -00188)

Figure 4-11 - Seal Prep Tool

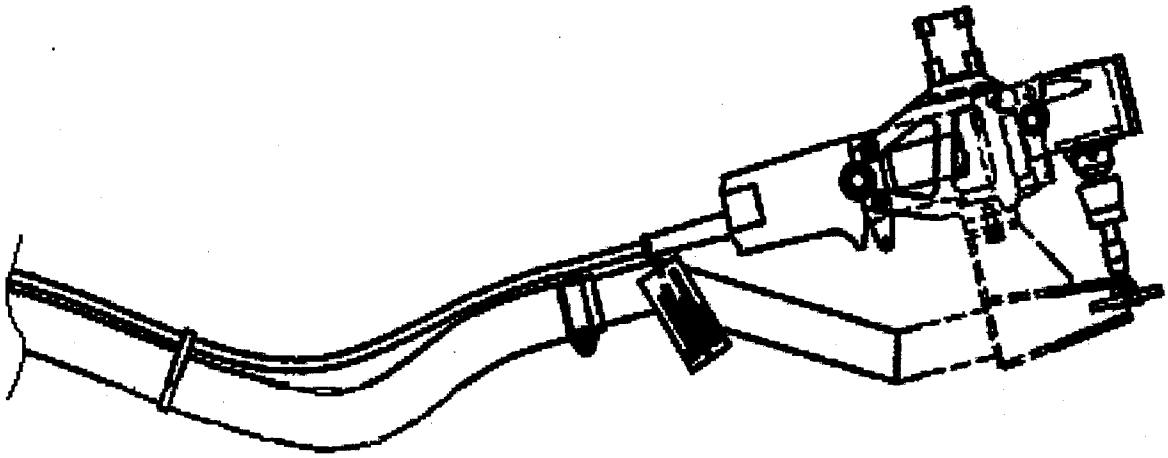

4.1.1.3.8 Lid Disposal Bin

Component Tag Number: 24590-LAW-HC-LFH-LID-00033 (North)
Component Tag Number: 24590-LAW-HC-LFH-LID-00034 (South)
Refer to: 24590-LAW-3PS-HCTH-T0001, *Engineering Specification for Product Container Lidding System*

The lid disposal bin is a temporary storage location for failed lid-and-seal assemblies that are removed by the lid recovery tool. The lid disposal bin is located under the lidding shield window and is attached to the east edge of the lidding tool tray.

4.1.1.3.9 Lidding Tool Tray

Component Tag Number: 24590-LAW-HC-LFH-LID-00037 (North)
Component Tag Number: 24590-LAW-HC-LFH-LID-00038 (South)
Refer to: 24590-LAW-3PS-HCTH-T0001, *Engineering Specification for Product Container Lidding System*

The lidding tool tray is located under the lidding shielding window. The seal prep tool (LFH-LID-00039/00040) and its attachments are stored on the tray. The tray is a metal shelf with low/inclined lips or other means of retaining tools or fixtures without trapping contamination. The tray is easily decontaminated.

Figure 4-12 - Lidding Tool Tray

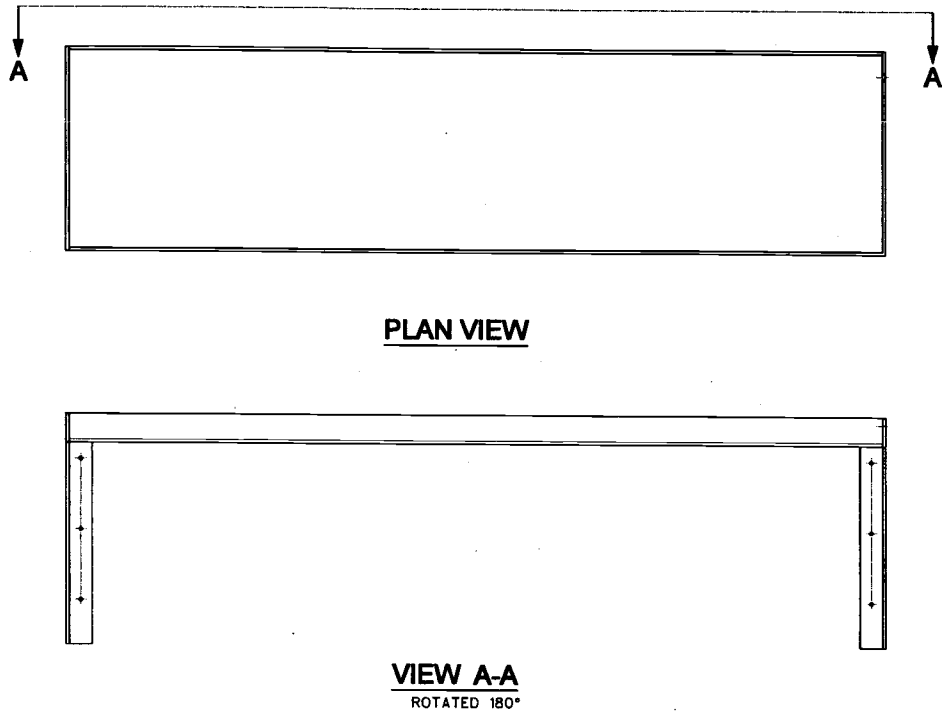

4.1.1.4 Decontamination Station Equipment

The Decontamination Station is located in the decontamination area (L-0109C/0115C), west of the lidding area, and includes the following components.

4.1.1.4.1 Upper and Lower Decontamination Power Manipulators

Component Tag Number: 24590-LAW-MJ-LFH-MANIP-00001 Upper Manipulator (North)
Component Tag Number: 24590-LAW-MJ-LFH-MANIP-00011 Lower Manipulator (North)
Component Tag Number: 24590-LAW-MJ-LFH-MANIP-00008 Upper Manipulator (South)
Component Tag Number: 24590-LAW-MJ-LFH-MANIP-00012 Lower Manipulator (South)
Refer to: 24590-LAW-3PS-HDYR-T0001, *Engineering Specification for Power Manipulators and Turntables – Low Activity Waste Vitrification Facility*

The upper and lower decontamination power manipulators are used to decontaminate the LAW product container, grapple and turntable by CO_2 pellet blasting. The upper power manipulator decontaminates the top and upper sides of the container. The lower power manipulator decontaminates the bottom and lower sides of the container. The manipulator controller coordinates movement of the manipulator with the decontamination turntable (LFH-TTBL-00001/00002).

The manipulators are a six-axis robotic arm, each axis being driven by a precision servomotor and outfitted with a corresponding encoder for position feedback. Attached to the end of each manipulator is the end of arm assembly (end effector).

Cycle A is the lower manipulator decontaminating the container bottom edge, container bottom surface, turntable and turntable edge. Cycle B is the upper manipulator decontaminating the container top surface, top edge, recess, cone, shoulder and upper side (with the lower manipulator decontaminating the lower side). Grapple cycle is the upper manipulator decontaminating the grapple base plate and lifting paws. An interface signal from the dual rail hoist (LFH-HST-00010/00005) confirms the hook is rotating prior to beginning container bottom edge, container bottom and grapple decontamination. (24590-CM-POA-HDYR-00002-03-00001)

The major power manipulator components are: drives, articulated arms, wrists, end-effectors and motors, pneumatic control locks, actuators and electrically operated pneumatic control valves, electrical instrumentation and interlocks, dedicated robotic controller interfacing with the ICN, dedicated robotic teach pendant located outside the cell; and end-effectors (LFH-TOOL-00025/00026 and 00006/00020) tailored for decontamination and effluent recovery. Cabling incorporates connectors to facilitate removal.

Figure 4-13 - Container Decontamination Zones

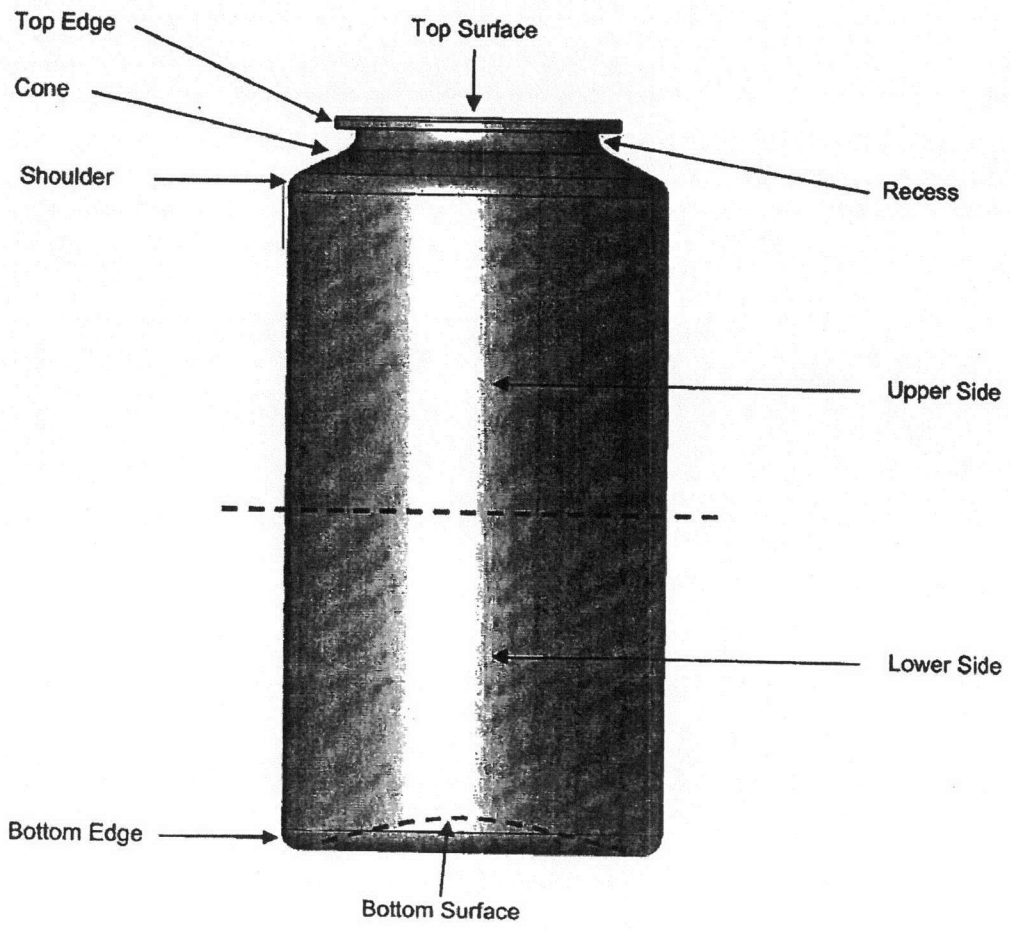

Figure 4-14 - Upper Decontamination Power Manipulator

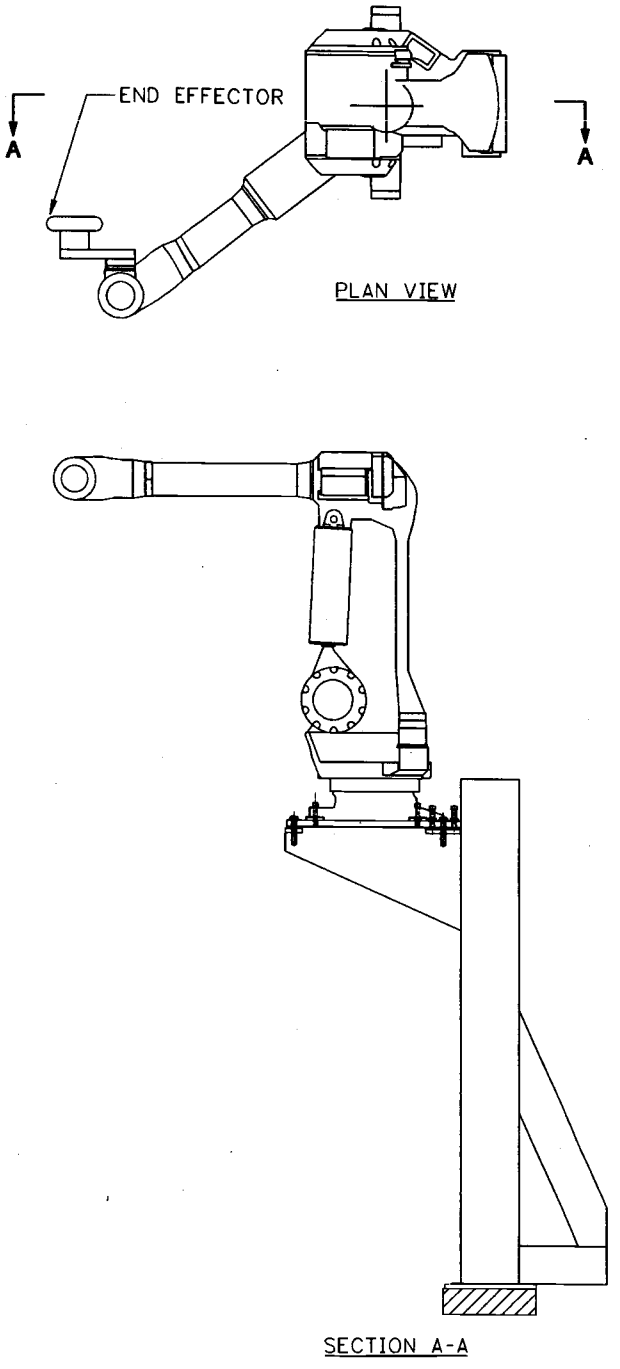

Figure 4-15 - Lower Decontamination Power Manipulator

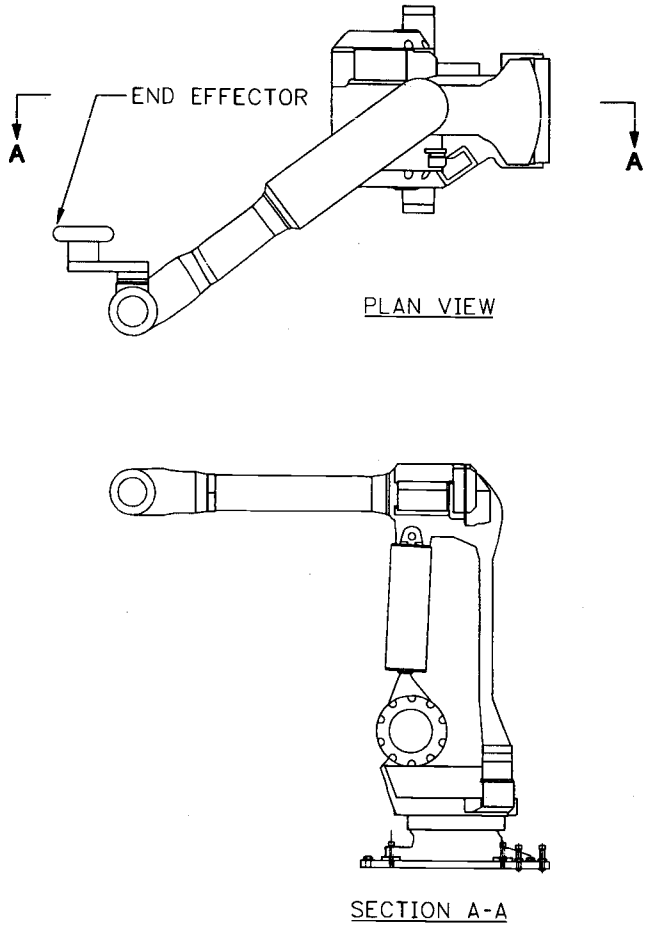

4.1.1.4.2 Decontamination Turntable

Component Tag Number: 24590-LAW-MJ-LFH-TTBL-00001 (North)
Component Tag Number: 24590-LAW-MJ-LFH-TTBL-00002 (South)
Refer to: 24590-LAW-3PS-HDYR-T0001, *Engineering Specification for Power Manipulators and Turntables – Low Activity Waste Vitrification Facility*

The decontamination turntable rotates the container during decontamination and is located approximately in the center of each decontamination station. The upper and lower decontamination power manipulators work in conjunction with the turntable during the decontamination process. The turntable is controlled as a "seventh axis" by the same robotic controller utilized for the power manipulators. A closed-loop variable speed drive servomotor provides both motive force and speed control.

Figure 4-16 - Decontamination Turntable

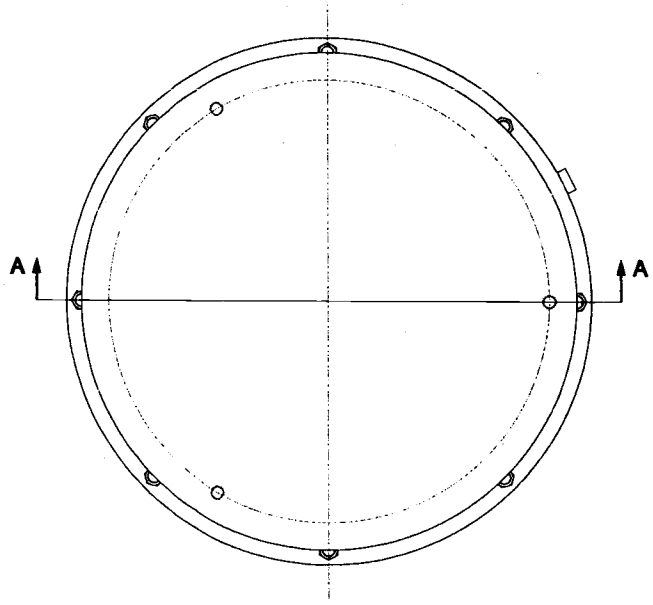

PLAN VIEW

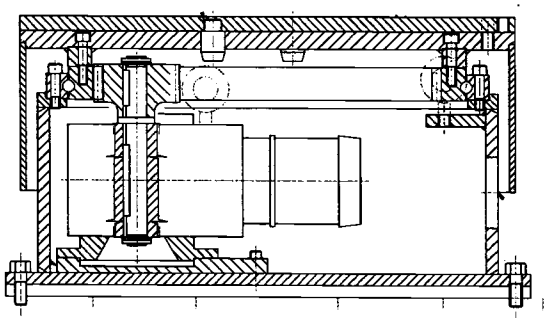

SECTION A-A

4.1.1.4.3 Decontamination Power Manipulator CO_2 Nozzle/Effluent Recovery End Effectors

Component Tag Number: 24590-LAW-FH-LFH-TOOL-00025 Upper End Effector (North)
Component Tag Number: 24590-LAW-FH-LFH-TOOL-00006 Lower End Effector (North)
Component Tag Number: 24590-LAW-FH-LFH-TOOL-00026 Upper End Effector (South)
Component Tag Number: 24590-LAW-FH-LFH-TOOL-00020 Lower End Effector (South)
Refer to: 24590-LAW-3PS-HDYR-T0001, *Engineering Specification for Power Manipulators and Turntables – Low Activity Waste Vitrification Facility*

The upper and lower decontamination power manipulators employ end-effectors (end of arm assemblies) to decontaminate the container by CO_2 pellet blasting. The end effector has two CO_2 pellet spray nozzles, a heated air diffuser ring, shroud, effluent exhaust port and two pneumatically actuated grippers.

A high velocity stream of CO_2 pellets in transport air (supplied by system CDG) sublimates on contact with the container, which removes surface contamination by ablation. The heated air (supplied by system CDG) prevents condensation of sublimated CO_2 when the exhaust temperature is 58°F or lower. The grippers hold a shroud, which collects the exhaust (gaseous CO_2, air and particulates) and directs it to the exhaust port. The exhaust port is connected to a hose that flows to the system C5V decontamination effluent removal system.

Eight shrouds in six different configurations, which are stored on the manipulator tool trays, are available at each decontamination station. The grippers hold a different shroud depending on the container area being decontaminated. The shroud is selected to minimize airborne contamination during the decontamination process. The upper manipulator end effector uses the following shrouds: straight, top edge, recess, cone and shoulder. The lower manipulator end effector uses the following shrouds: straight, top edge and bottom edge.

Figure 4-17 - Decontamination Power Manipulator End-Effector

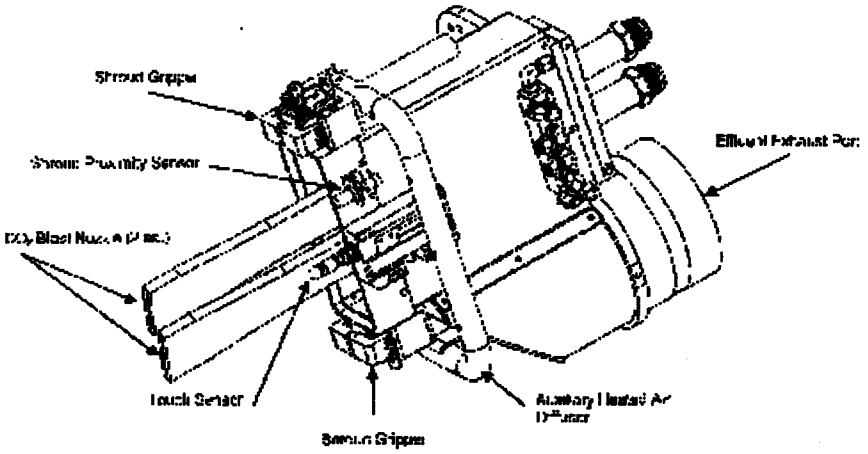

4.1.1.4.4 Upper and Lower Decontamination Power Manipulator Tool Trays

Component Tag Number: 24590-LAW-MJ-LFH-MANIP-00015 Upper Tray (North)
Component Tag Number: 24590-LAW-MJ-LFH-MANIP-00016 Lower Tray (North)
Component Tag Number: 24590-LAW-MJ-LFH-MANIP-00017 Upper Tray (South)
Component Tag Number: 24590-LAW-MJ-LFH-MANIP-00018 Lower Tray (South)
Refer to: 24590-LAW-3PS-HDYR-T0001, *Engineering Specification for Power Manipulators and Turntables – Low Activity Waste Vitrification Facility*

The decontamination power manipulator tool trays are located at the power manipulator pedestal. The upper manipulator tool tray holds 5 shrouds. The lower manipulator tool tray holds 3 shrouds. The tray is a rack with designated positions for the different shrouds. Each position has a proximity sensor, which is located such that it only activates if the correct shroud is present. This ensures the correct shroud is stored in its designated position.

4.1.1.5 Swabbing Station Equipment

The Swabbing Station is located in the swabbing area (L-0109B/0115B), west of the decontamination area, and includes the following components.

4.1.1.5.1 Swabbing Power Manipulator

Component Tag Number: 24590-LAW-MJ-LFH-MANIP-00002 (North)
Component Tag Number: 24590-LAW-MJ-LFH-MANIP-00009 (South)
Refer to: 24590-LAW-3PS-HDYR-T0001, *Engineering Specification for Power Manipulators and Turntables – Low Activity Waste Vitrification Facility*

The Swabbing Power Manipulators are used to swab the surface of the LAW product container for contamination monitoring. The manipulator is a six-axis machine with each axis driven by a precision servo-motor and outfitted with a corresponding encoder for position feedback. The manipulator is also used to swab the swabbing turntable and decontamination bogie, and pick up and deposit swabs to the posting port. The manipulator controller coordinates movement of the manipulator with the swabbing turntable (LFH-TTBL-00005/00006).

Contamination monitoring only requires the manipulator to swab several small areas of the container, not the entire surface of the container. The swabbing activities are container lip (flange edge), container top, container shoulder, container sides, container bottom, swabbing turntable and decontamination bogie. For each activity, there are 3 to 4 preprogrammed swabbing areas. (24590-CM-POA-HDYR-00002-14-00005) The operator can select the swabbing activities and areas. An interface signal from the dual rail hoist hook (LFH-HST-00011/00006) confirms the hook is rotating prior to container bottom swabbing. After swabbing, the swabs are transferred to the swab posting port and swab monitoring glove box.

The major components of the Swabbing Power Manipulator are: articulated arms, wrists, and end-effectors; drives; motors; pneumatic control locks; actuators and electrically operated pneumatic control valves; electrical instrumentation and interlocks with a dedicated robotic controller that interfaces with the ICN. A dedicated robotic teach pendant located outside the cell is included. The end-effectors (LFH-TOOL-00004/00005) are customized for swabbing. Cabling incorporates connectors to facilitate removal.

Figure 4-18 - Swabbing Power Manipulator

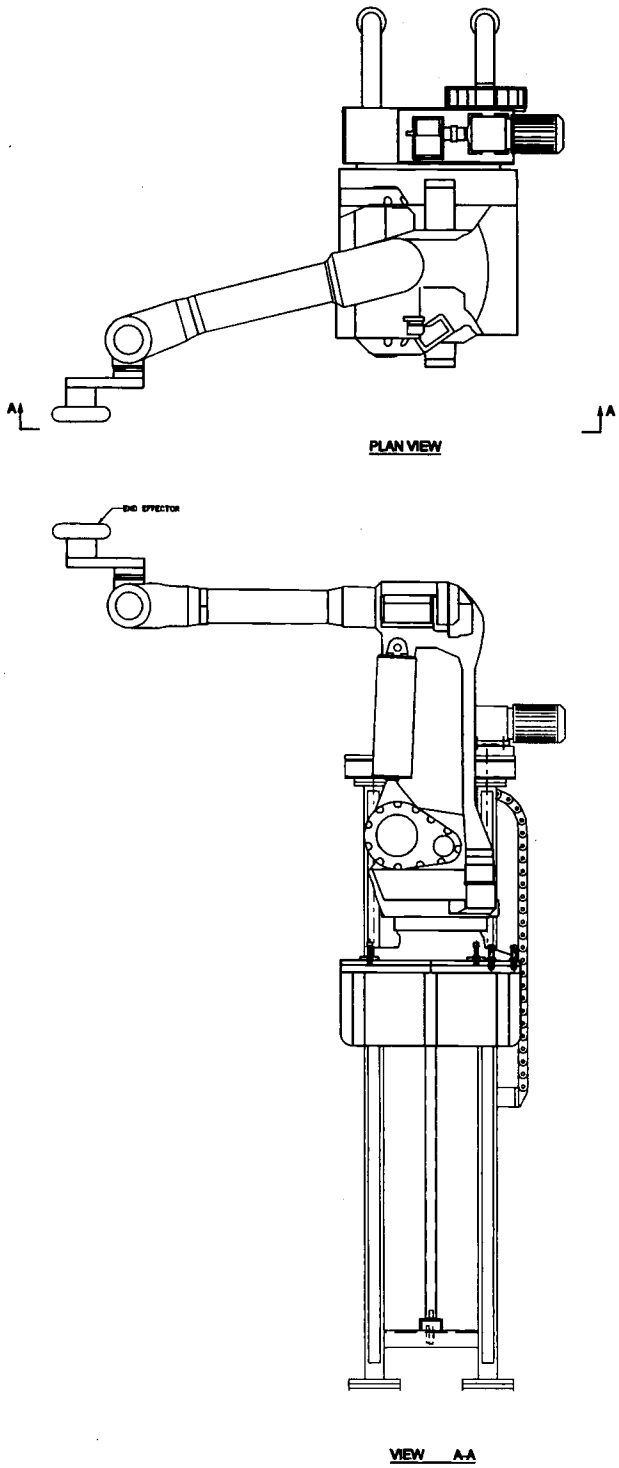

4.1.1.5.2 Swabbing Bogie-Mounted Turntable

Component Tag Number: 24590-LAW-MJ-LFH-TTBL-00005 (North)
Component Tag Number: 24590-LAW-MJ-LFH-TTBL-00006 (South)
Refer to: 24590-LAW-3PS-HDYR-T0001, *Engineering Specification for Power Manipulators and Turntables – Low Activity Waste Vitrification Facility*

The swabbing turntable, which is located on the swabbing bogie, rotates the LAW container during the swabbing process. The swabbing power manipulators work in conjunction with the turntable. The turntable is controlled by the same robotic controller that controls the swabbing power manipulators.

The swabbing turntable consists of the following: electrically operated drive motors, instrumentation, interlocks, and control by a dedicated robotic controller that interfaces with the ICN.

Figure 4-19 - Swabbing Bogie-Mounted Turntable

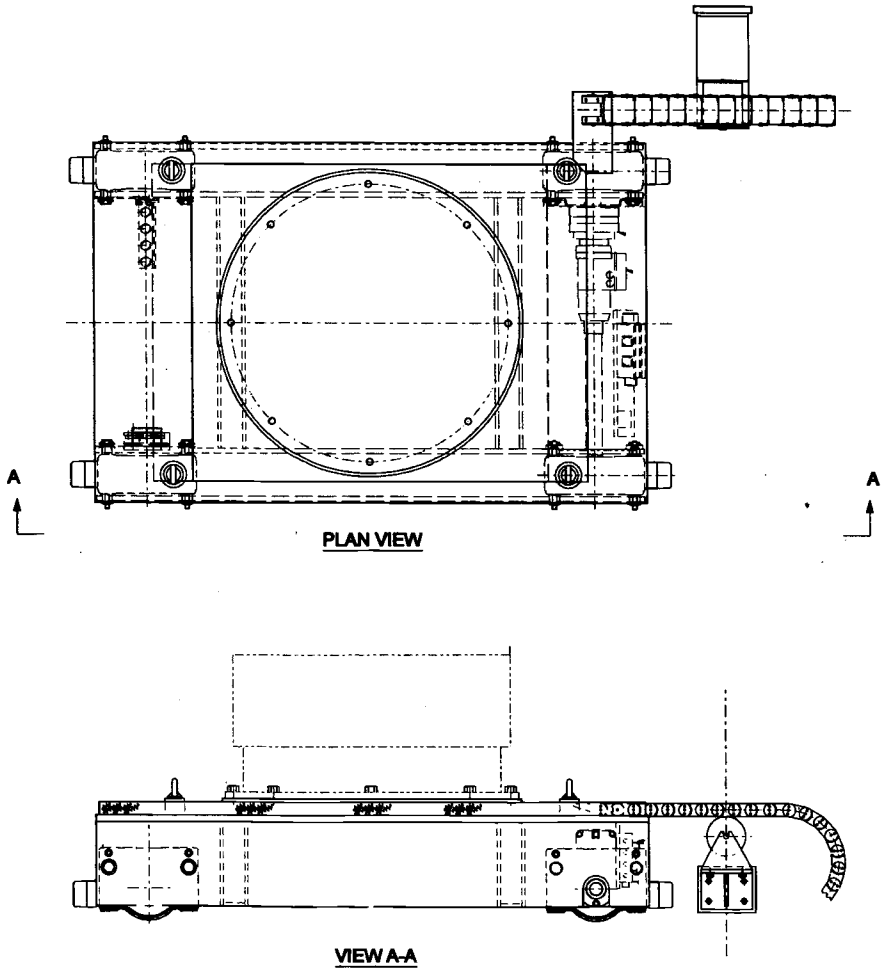

4.1.1.5.3 Swabbing End-Effectors

Component Tag Number: 24590-LAW-FH-LFH-TOOL-00004 (North)
Component Tag Number: 24590-LAW-FH-LFH-TOOL-00005 (South)
Refer to: 24590-LAW-3PS-HDYR-T0001, *Engineering Specification for Power Manipulators and Turntables – Low Activity Waste Vitrification Facility*

The swabbing end-effector holds the swab during the swabbing process. The end effector includes an end of arm assembly and a triple-wedge pneumatically actuated gripper. The end-effector has a deflection sensor that measures the force (pressure) that the swab exerts on the container. Plant service air is supplied to actuate the grippers and for cooling.

There are two styles of swabs. The first is in the shape of a right circular cylinder with the top being the contact surface. The second is C-shaped, with the interior surfaces used to swab the underside of the container flange. The swabs are replaceable.

Each Swabbing End-Effector's major components are: pneumatic control locks, actuators and electrically operated pneumatic control valves, instrumentation, and interlocks.

4.1.1.6 Bogies

Component Tag Number: 24590-LAW-MQ-LFH-TRLY-00007 – Lidding Bogie (North)
Component Tag Number: 24590-LAW-MQ-LFH-TRLY-00006 – Lidding Bogie (South)
Component Tag Number: 24590-LAW-MQ-LFH-TRLY-00005 – Decontamination Bogie (North)
Component Tag Number: 24590-LAW-MQ-LFH-TRLY-00008 – Decontamination Bogie (South)
Component Tag Number: 24590-LAW-MQ-LFH-TRLY-00001 – Swabbing Bogie (North)
Component Tag Number: 24590-LAW-MQ-LFH-TRLY-00015 – Swabbing Bogie (South)
Refer to: 24590-WTP-3PS-MQR0-T0003, *Engineering Specification for LAW and PTF Bogies*

Bogies are motor operated, variable speed, four-wheeled trolleys that transport the container in the finishing line. There are three bogies in each finishing line and they travel on the same pair of rails, which span the lidding, decontamination, swabbing and monitoring/export areas. The bogies have a 25,000 lb capacity [3.7.1.3] and are capable of transporting a container in an overpack in off-normal events.

Bogies are normally controlled via the ICN and move from one position to another using a preprogramed sequence. Bogies are interlocked with the relevant shield or confinement doors, each other, and the operating stations for which they serve as a platform. All surfaces in contact with the container are stainless steel [3.7.1.2]. They are designed for hands-on maintenance and easy decontamination.

4.1.1.6.1 Lidding Bogie

The lidding bogie moves the container from the sampling station to the inert fill station, lidding station and decontamination station. The lidding bogie at the sampling station (which is also the bogie park position) receives the filled product container from system LPH via the lidding monorail hoist. The container is sampled (if required) and the glass fill level is measured. If the fill level is below the contract acceptance specification, the bogie moves to the inert fill station. The bogie has an elevating table that

raises the container to mate the container flange with the inert fill hopper outlet flange. After inert fill, the bogie lowers the container and moves to the sampling station for level measurement.

The bogie moves to the lidding station and raises the container. The lid press, attached to the lidding jib crane, is lowered onto the container flange and a lid is attached to seal the container. If the lid latches fail to engage, the lid recovery tool (attached to the sealing jib crane) is lowered onto the container flange and removes the failed lid. After successful lidding, the lidding bogie lowers the container and transports the container to the decontamination area.

The elevating table has three height positions: transport, inert fill and lidding. The reason the container is raised during lidding is if the jib crane hoist fails to lift the lid press (or recovery tool), the container can be lowered to decouple it from the lid press (or lid recovery tool) and jib crane. Then the container can be moved out of the area and maintenance personnel can enter the area.

The lidding bogie major components include: electrically operated bogie chassis, drive and motor, electrically operated elevating table, drive and motor, cable carrier (air, power and instruments), instrumentation and interlocks.

Figure 4-20 - Lidding Bogie

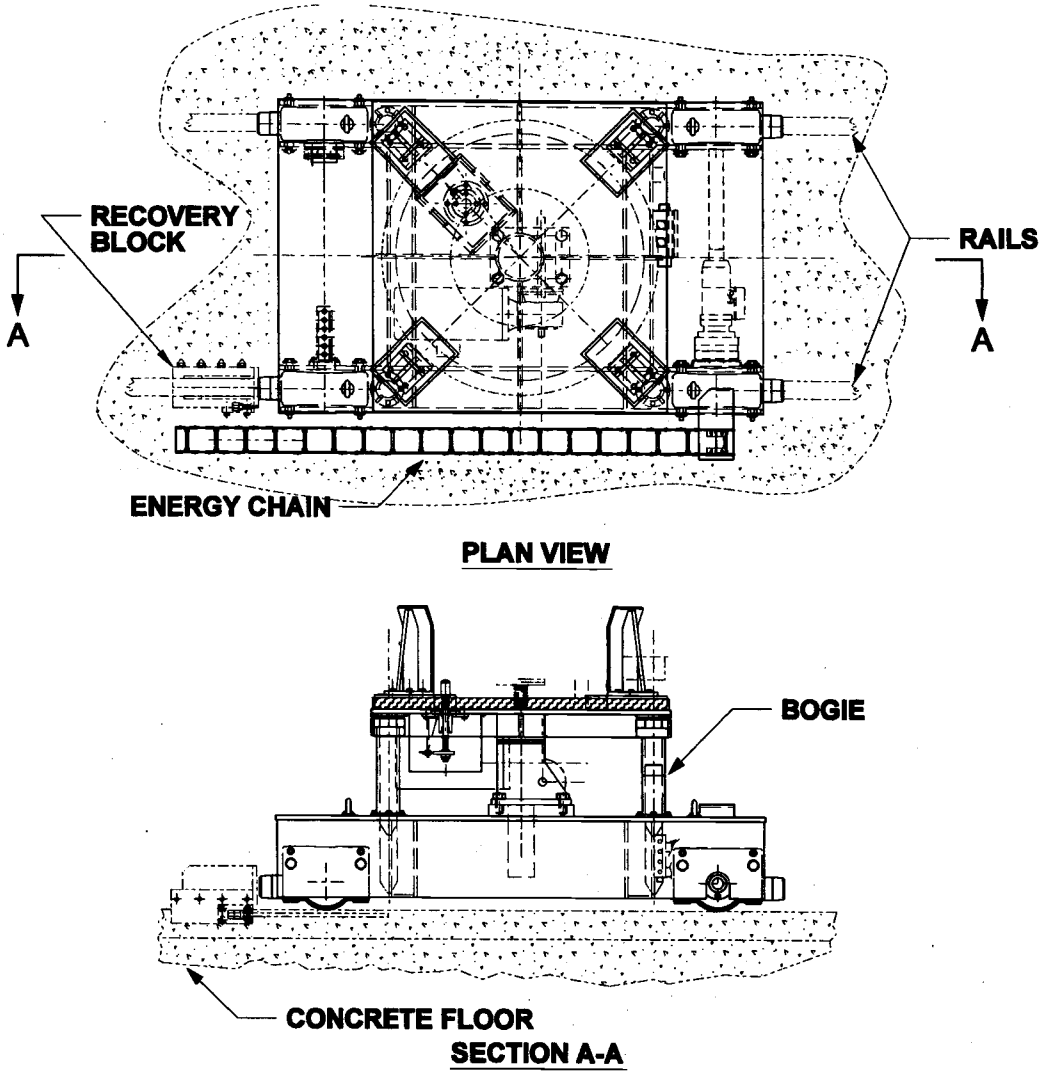

4.1.1.6.2 Decontamination Bogie

The decontamination bogie moves the container from the decontamination station to the swabbing station. This bogie has four positions (west to east): bogie decontamination, container decontamination station, park position in swabbing area, and swabbing station. The bogie decontamination position is used if the bogie becomes contaminated, which is an off-normal occurrence.

The decontamination bogie major components include: electrically operated bogie chassis, drive and motor, cable carrier (power and instruments), instrumentation and interlocks.

Figure 4-21 - Decontamination Bogie

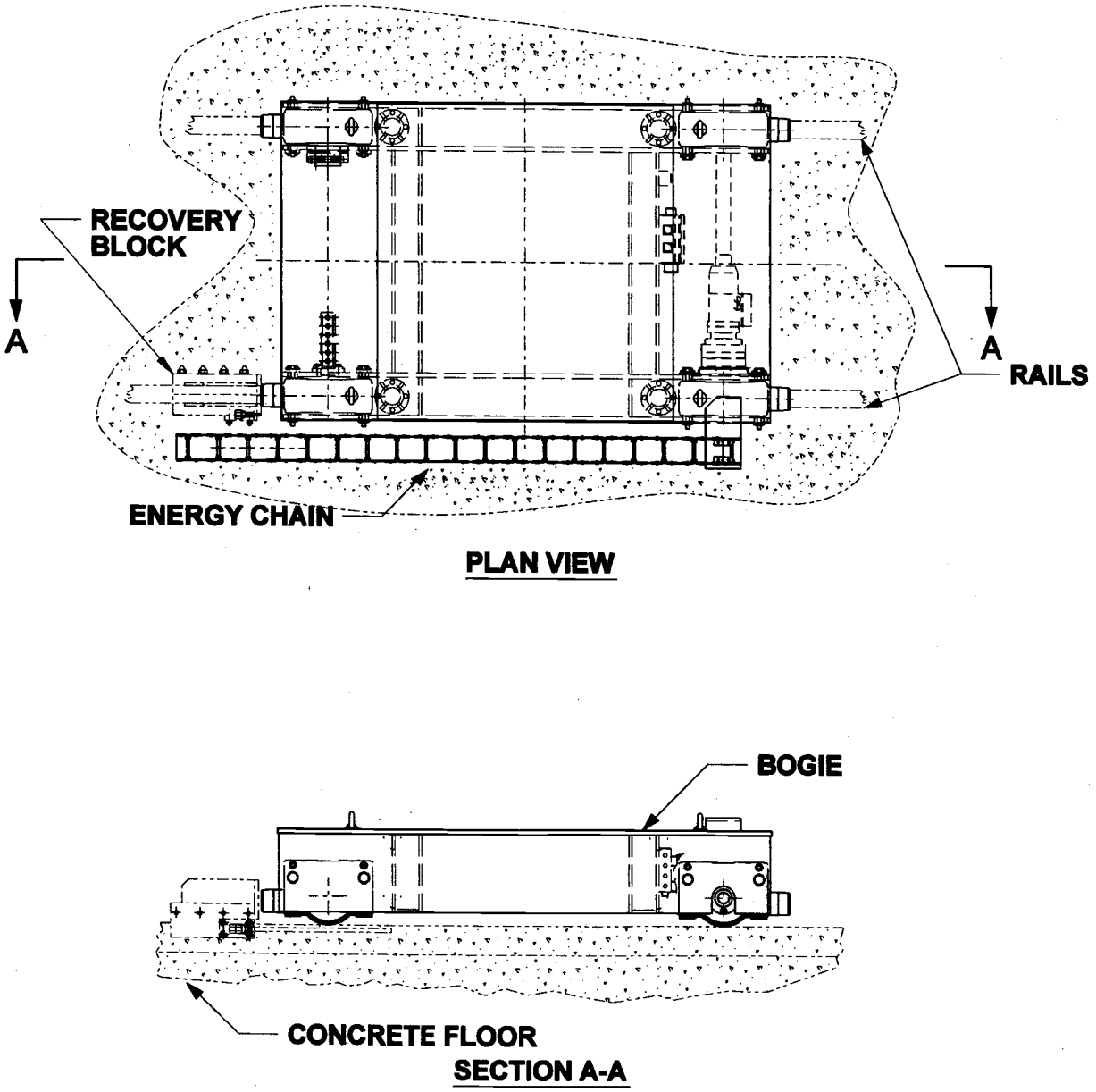

4.1.1.6.3 Swabbing Bogie

The swabbing bogie moves the container from the swabbing station and to the monitoring/export station (park position). It serves as the operations platform at both stations. Mounted on the swabbing bogie is the swabbing turntable (LFH-TTBL-00005/00006), which rotates the container during swabbing and radiation monitoring.

The swabbing bogie includes the following: electrically operated bogie chassis, drive and motor, electrically operated turntable assembly, drive and motor, cable carrier (power and instruments), instrumentation and interlocks.

Figure 4-22 - Swabbing Bogie

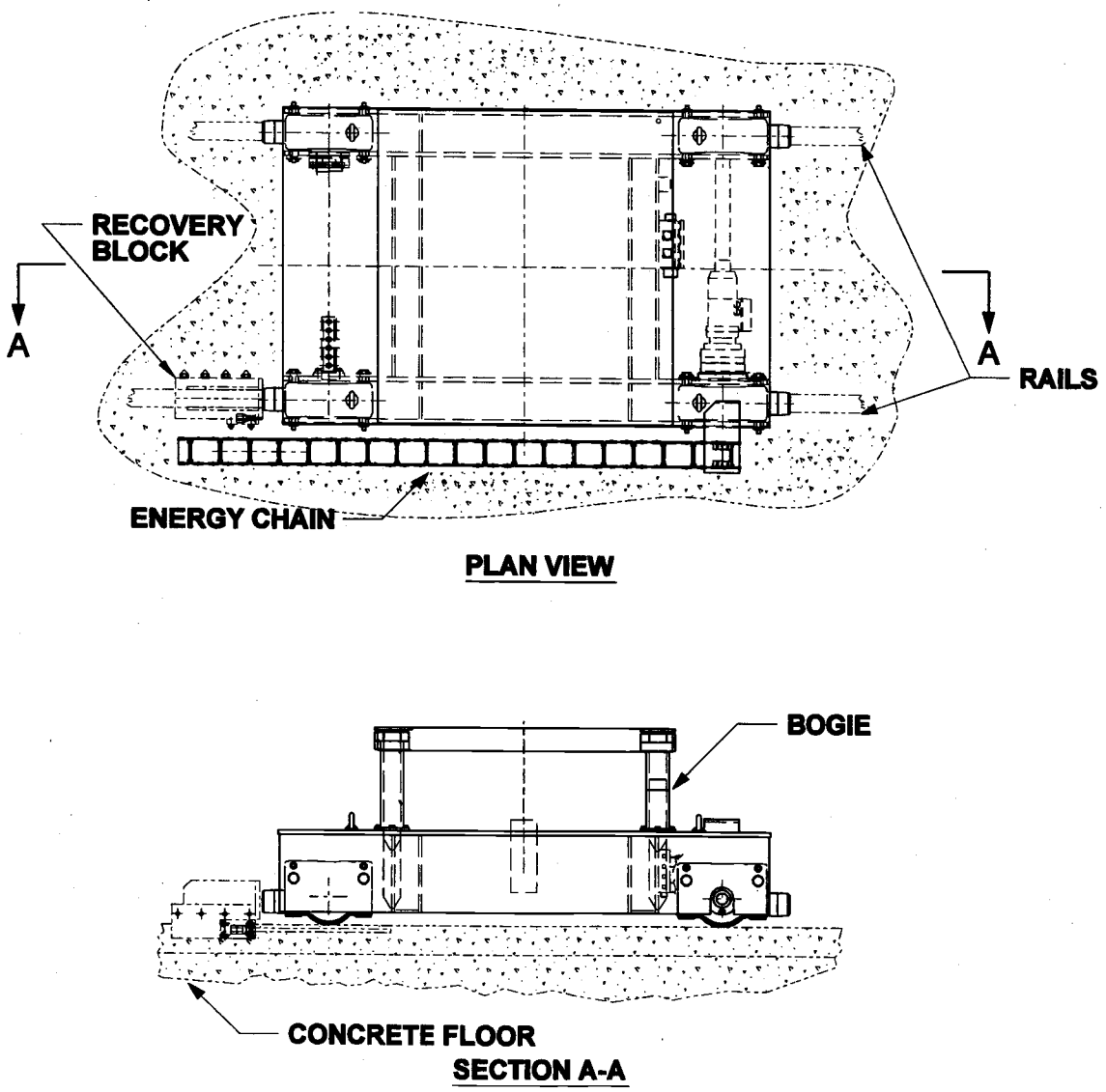

4.1.1.6.4 Bogie Recovery System

Component Tag Number: 24590-LAW-MH-LFH-RCVY-00004 (North)
Component Tag Number: 24590-LAW-MH-LFH-RCVY-00003 (South)
Refer to: 24590-WTP-3PS-MQR0-T0003, *Engineering Specification for LAW and PTF Bogies*

The bogie recovery system is designed to move a failed bogie to the monitoring/export area, except for the lidding bogies [3.7.4.1]. The recovery system can move the bogie to a location that allows a hoist to remove the container and to a location where manned entry is possible. If repairs can be made without moving a bogie, it is desirable to do so rather than risk contaminating the decontamination, swabbing, and monitoring/export areas.

The bogie recovery system is a winch and a wire rope attached to a recovery block. The recovery block, which slides on a bogie rail, is located west of the lidding bogie. The block is connected to the wire rope, which runs the length of the finishing line to the winch in the monitoring/export area. The wire rope wraps around an intermediate pulley before winding onto the winch, which pulls the rope vertically. In order to retrieve the decontamination or swabbing bogie, manned entry to move the recovery block to east of the lidding bogie is necessary.

The 3 bogies in a finishing line travel on the same pair of rails and share the recovery system. The recovery system is capable of recovering (towing) a single bogie and container with a locked drive axle. It can also tow the decontamination bogie (without container) in conjunction with the swabbing bogie and container with a locked drive axle.

Figure 4-23 - Bogie Recovery System

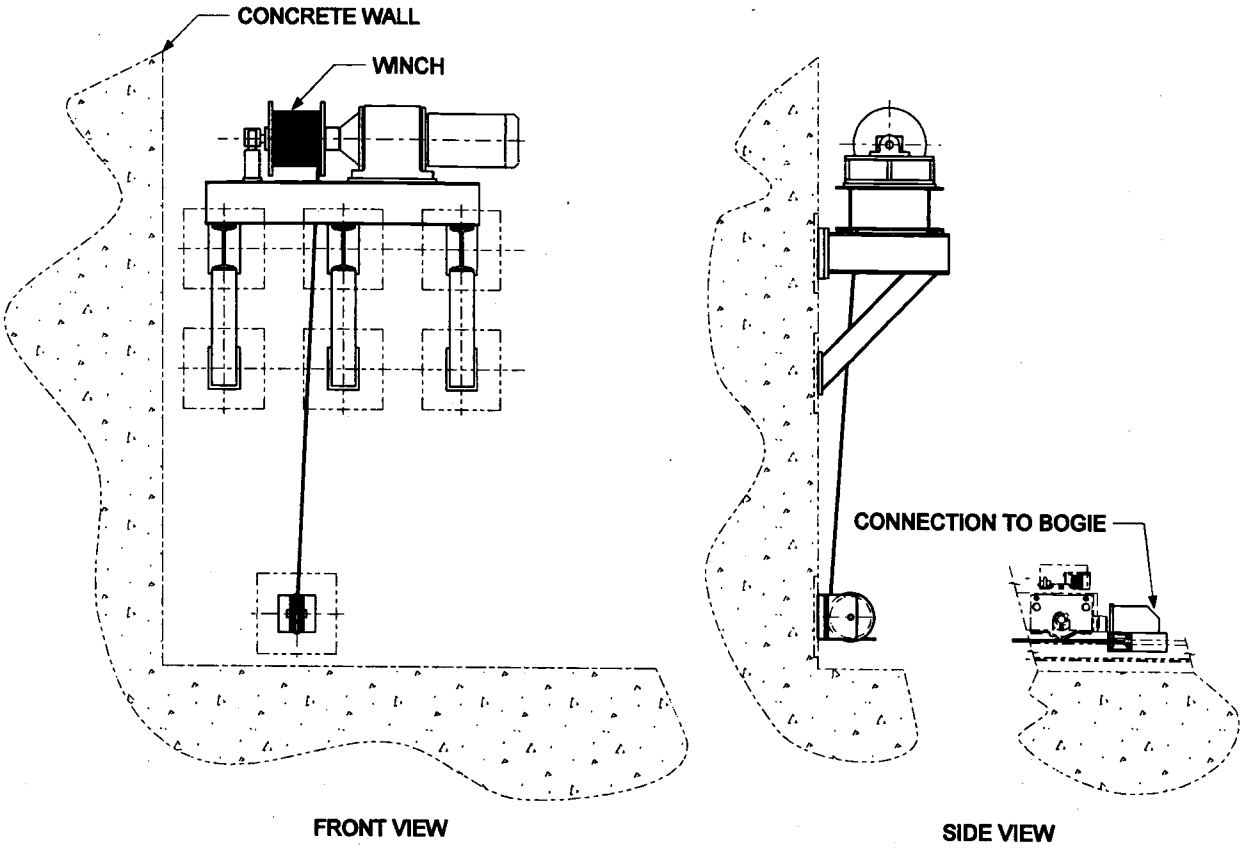

4.1.1.7 Monorail and Dual Rail Hoists

Component Tag Number: 24590-LAW-MJ-LFH-HST-00008 – Lidding Monorail Hoist (North)
Component Tag Number: 24590-LAW-MJ-LFH-HST-00009 – Lidding Monorail Hoist (South)
Component Tag Number: 24590-LAW-MJ-LFH-HST-00001 – Line Transfer Monorail Hoist
Component Tag Number: 24590-LAW-MJ-LFH-HST-00010 – Decontamination Dual-Rail Hoist (North)
Component Tag Number: 24590-LAW-MJ-LFH-HST-00005 – Decontamination Dual-Rail Hoist (South)
Component Tag Number: 24590-LAW-MJ-LFH-HST-00011 – Swabbing Dual-Rail Hoist (North)
Component Tag Number: 24590-LAW-MJ-LFH-HST-00006 – Swabbing Dual-Rail Hoist (South)
Refer to: 24590-WTP-3PS-MJKH-T0002, *Engineering Specification for Process Monorail Hoists (Commercial Quality)*

The monorail hoists are used to move the container in the lidding area and the line transfer station. The dual rail hoists, which have a powered rotating hook, are used to move the container in the decontamination and swabbing areas. The dual rail hoists are nearly identical.

The lidding monorail hoist is located in the lidding area. It is used to transfer the container from the system LPH transfer tunnel bogie to the lidding bogie.

The line transfer monorail hoist is located in the line transfer station. It is used to transfer containers between the north and south decontamination areas. This allows bypassing failed or offline equipment in a finishing line. The hoist is also used to move empty and refilled lid holders to and from the maintenance area. The hoist can be used to remove failed equipment and introduce replacement equipment from the maintenance area.

The decontamination dual-rail hoist is located in the decontamination area. The hoist is used to lift the container from the lidding bogie. The hoist has a powered rotating hook that rotates the container while the container bottom is being decontaminated. The hoist then lowers the container onto the decontamination turntable. After container decontamination is completed, the hoist transfers the container onto the decontamination bogie.

The swabbing dual-rail hoist is located in the swabbing area. The hoist is used to lift the container from the decontamination bogie. The hoist has a load block mounted grapple that rotates the container while the container bottom is being swabbed. The hoist then lowers the container onto the swabbing bogie turntable.

The hoists have a 10 ton capacity, which is approximately 25% more than the weight of a filled LAW container with an overpack [3.6.1.2]. Brakes on hoists are designed to set when power is off [3.6.4.2]. The hoists are designed with limited automation, as they will be raised and lowered manually [3.10.1.4]. The trolley movement is normally automated [3.10.1.2.1].

Each hoist is serviced from a permanent maintenance platform [3.6.4.5]. The hoists are designed with modular construction to facilitate removal and replacement of failed components [3.6.1.3.1]. The components are oriented to reduce maintenance time. Hoists are designed with lubrication systems that are accessible for ease of maintenance [3.6.4.3].

The monorail hoist major components include: electrically operated trolley, drive and motor, electrically operated hoist, drive and motor, instrumentation, and interlocks. The hoist is equipped with a recovery hoist and motor, and a trolley recovery drive and motor (24590-CM-POA-MJKH-00001-05-00005 and 00001).

The dual rail hoist major components include: electrically operated trolley, drive and motor, electrically operated hoist, drive and motor, electrically operated rotating hook, instrumentation, and interlocks. The hoist is equipped with a recovery hoist and motor, and a trolley recovery drive and motor (24590-CM-POA-MJKH-00001-05-00007/00008) [3.6.4.5].

Figure 4-24 - Dual-Rail Hoist

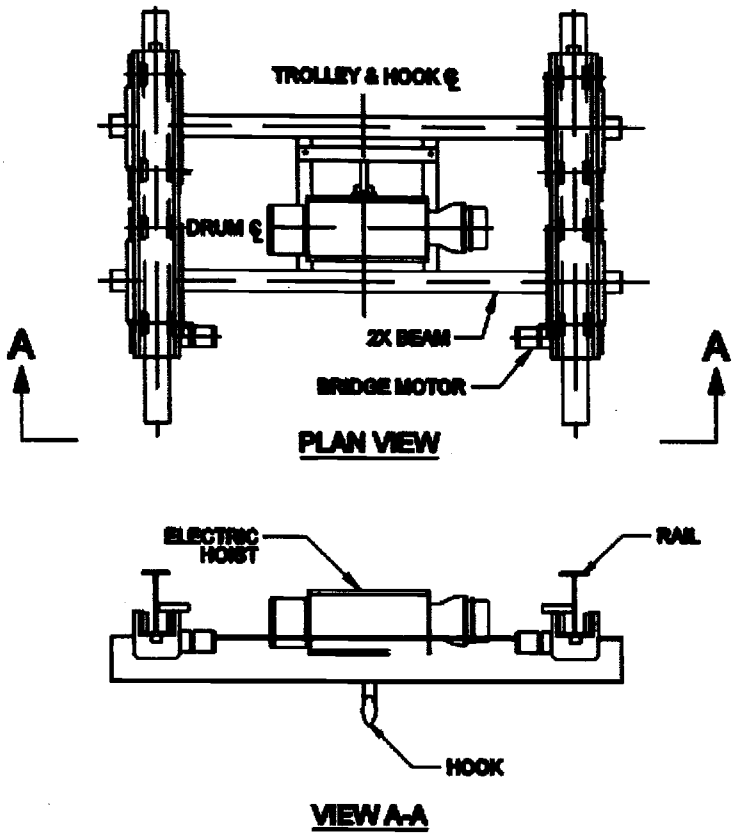

4.1.1.8 Jib Cranes

Component Tag Number: 24590-LAW-MJ-LFH-CRN-00006 – Lidding Jib Crane (North)
Component Tag Number: 24590-LAW-MJ-LFH-CRN-00003 – Lidding Jib Crane (South)
Component Tag Number: 24590-LAW-MJ-LFH-CRN-00007 – Sealing Jib Crane (North)
Component Tag Number: 24590-LAW-MJ-LFH-CRN-00004 – Sealing Jib Crane (South)
Refer to: 24590-WTP-3PS-MJKJ-T0003, *Engineering Specification for Remote Operated Under Running Crane and Jib Cranes (Commercial Quality)*

The jib cranes are 3 ton, wall mounted, cantilevered jib cranes. They are located in the lidding area and support activities at the lidding station. The jib cranes have three motions: jib rotation (slewing), trolley travel and hoist raise/lower. Each motion uses a two speed, variable frequency drive (VFD) motor. The trolley and hoist are serviced from a permanent maintenance platform [3.6.4.5]. The jib cranes are nearly identical.

The lidding jib crane, which is located above and to the east of the lidding shield window, is used to move the lid press between the lid magazine and container. It is also used to replace an empty lid holder on the

lid magazine [3.6.1.2]. The container lidding position, lid magazine B, lid magazine and lid press parking stand are all located on the same lidding jib crane arc radius.

The sealing jib crane, which is located above and to the west of the lidding shield window, is used to move the lid recovery tool between its parking stand and the container. The container lidding position and lid recovery tool parking stand are located on the same sealing jib crane arc radius.

Figure 4-25 - System LFH Jib Crane

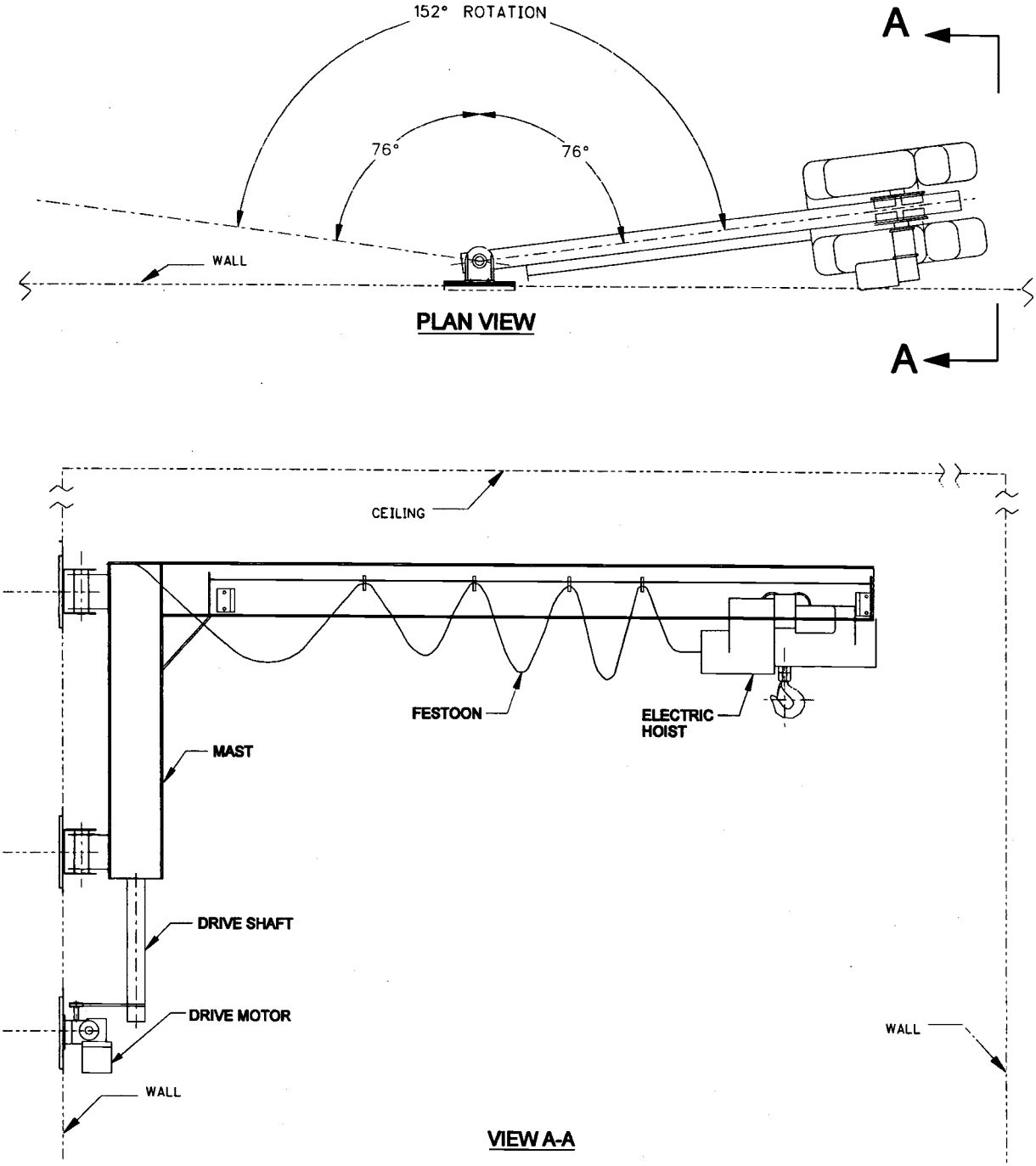

4.1.1.9 Grapples and Grapple Stand

Component Tag Number: 24590-LAW-FH-LFH-TOOL-00010 – Lidding (North)
Component Tag Number: 24590-LAW-FH-LFH-TOOL-00009 – Lidding (South)
Component Tag Number: 24590-LAW-FH-LFH-TOOL-00011 – Decontamination (North)
Component Tag Number: 24590-LAW-FH-LFH-TOOL-00012 – Decontamination (South)
Component Tag Number: 24590-LAW-FH-LFH-TOOL-00016 – Swabbing (North)
Component Tag Number: 24590-LAW-FH-LFH-TOOL-00015 – Swabbing (South)
Component Tag Number: 24590-LAW-FH-LFH-TOOL-00014 – Line Transfer
Component Tag Number: 24590-LAW-MH-LFH-MHAN-00008 – Line Transfer Maintenance Stand
Refer to: 24590-WTP-3PS-MQL0-T0003, *Engineering Specification for Special Grapples and Lifting Devices*

The grapple, in conjunction with a hoist, is used to pick up, transfer and deposit the LAW container. There is a designated grapple attached to the lidding monorail hoist, decontamination dual-rail hoist, swabbing dual-rail hoist, and the line transfer hoist. Multiple grapples are used to prevent contamination migration from the lidding area into the decontamination and swabbing areas. The lidding monorail, line transfer monorail, and decontamination dual-rail hoist have hook mounted grapples. The swabbing dual-rail hoist has a load block mounted grapple.

The grapple stand is located in the maintenance/staging area adjacent to the line transfer station. As needed, a grapple can be moved from the finishing line to the grapple stand for maintenance. Manned entry is required to connect and disconnect a grapple from a crane or hoist prior to moving to the finish line for maintenance.

The grapples use mechanically actuated jaws to engage the container by its flange and do not need electrical power. The grapple is designed to fail in the closed position. The grapple requires the container to be set down twice before it releases the container. The grapple has visual indicators for engaged, first setdown and second setdown. The grapple's rated capacity is 16,500 lb (24590-QL-POA-FH00-00001-03-00009), which is sufficient to lift the container and overpack.

The grapples on the decontamination hoists are decontaminated along with the container and the turntable. Since the shrouds on the decontamination end effectors do not exhaust the ablated CO_2 pellets that decontaminate the grapples the same way as they do with a container, a containment box connected to the C5V is used to exhaust the ablated CO_2 pellets during grapple decontamination.

Figure 4-26 - Grapple

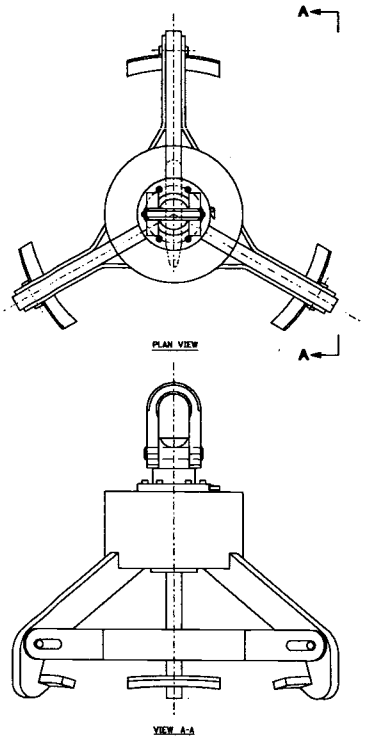

4.1.1.10 Trap Doors

Component Tag Number: 24590-LAW-AD-LFH-DOOR-00009 – Lidding Trap Door (North)
Component Tag Number: 24590-LAW-AD-LFH-DOOR-00010 – Lidding Trap Door (South)
Component Tag Number: 24590-LAW-AD-LFH-DOOR-00002 – Decontamination/Storage Trap Door (North)
Component Tag Number: 24590-LAW-AD-LFH-DOOR-00018 – Decontamination/Storage Trap Door (South)
Component Tag Number: 24590-LAW-AD-LFH-DOOR-00014 – Line Transfer Trap Door (North)
Component Tag Number: 24590-LAW-AD-LFH-DOOR-00011 – Line Transfer Trap Door (South)
Refer to: 24590-LAW-3PS-ADDC-T0001, *Engineering Specification for Low Activity Waste Facility System Transfer Trap Doors*

Trap doors are horizontal metal doors that provide shielding for personnel when performing in-cell maintenance. Trap doors have four wheels that roll on two rails. A pneumatic cylinder provides the motive force to open and close the door. When closed, the trap doors provide an engineered air gap that is designed to assist the cascading air flow from less contaminated spaces to more contaminated spaces [3.9.1.1]. The specified gap maintains sufficient face velocity across its area to prevent backflow. Trap doors are powered by rodless air cylinders and use sealed-for-life bearings. Trap doors are interlocked with the appropriate shield/containment doors to maintain cascaded air flow.

The lidding trap doors, located in the lidding area, separate the finishing lines from the transfer tunnel connected to the LAW pour cave (system LPH). The containers are introduced to the finishing lines

through the door opening. A non-safety interlock prevents the lidding trap doors from opening when there is a high temperature container present in the pour tunnel.

The decontamination/storage trap doors, located above the monitoring/export stations, separate the finishing lines from System LEH. After a product container has completed the finishing line process (level measurement, lid insertion and sealing, decontamination, swabbing and radiation measurement), the system LEH export bridge crane exports it through the door opening. A radiation monitor interlock (RS-4201/2001) prevents the door opening if the container radiation is high.

The line transfer trap doors are located above the decontamination areas at the +28 ft elevation. Containers are transferred between north and south finishing lines through their openings. The trap doors also enable the line transfer monorail hoist to introduce and withdraw equipment from the finishing lines.

Figure 4-27 - Trap Door (plan view)

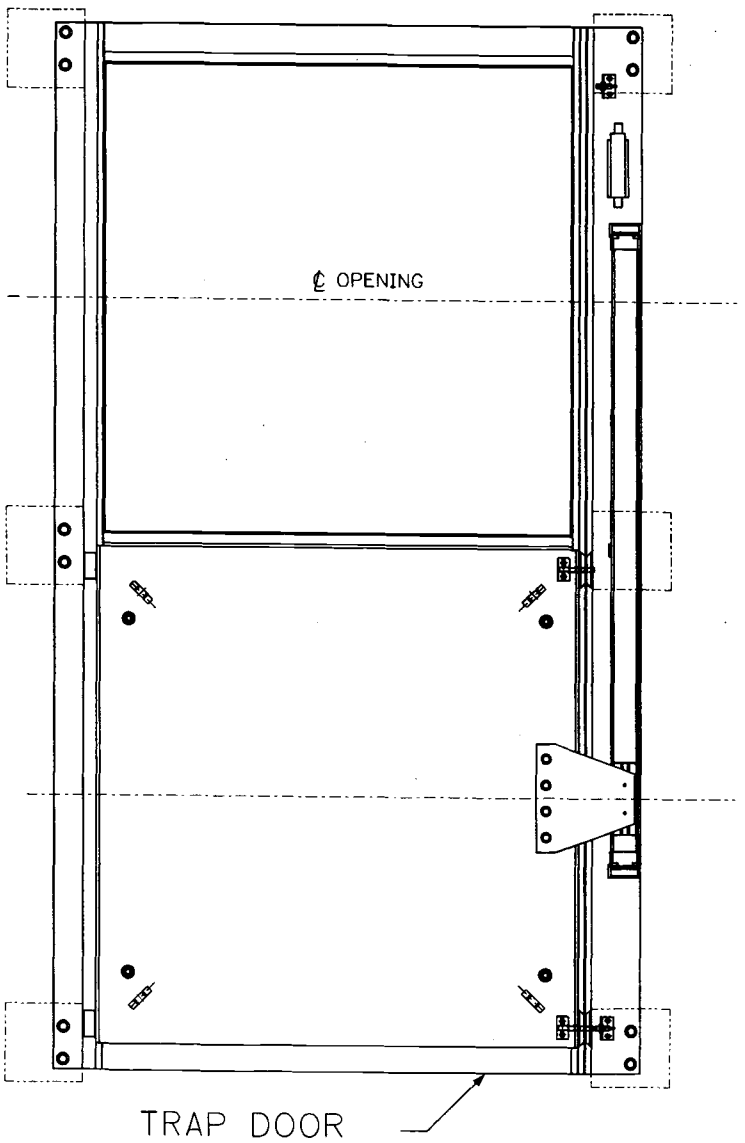

4.1.1.11 Line Transfer Equipment Door

Component Tag Number: 24590-LAW-AD-LFH-DOOR-00021
Refer to: 24590-LAW-3PS-ADDM-T0003, *Engineering Specification for LAW Bogie and Monorail Shield Doors*

The line transfer equipment door is located on the +28 ft level at the southern end of the line transfer station between the line transfer station (L-0217C) and the maintenance area (L-0217A).

The line transfer equipment door consists of a pair of electrically operated swing doors. The door was originally designed to provide shielding for maintenance area personnel during maintenance activities; however the line transfer station walls no longer are shield walls. It is designed for easy decontamination.

The line transfer equipment door allows transport of empty and filled lid holders, and failed or replacement equipment between the finishing lines and maintenance area. The line transfer equipment door also enables the line transfer monorail hoist to travel to the maintenance platform for inspection and servicing. The door opening is about 6 ft wide x 15 ft 3 in. high (24590-CM-POA-ADDH-00005-06-189).

The line transfer equipment door major components include: vertical swing shield doors, door lock, electrical drive motors, electrical instrumentation, and position switches.

Figure 4-28 - Line Transfer Equipment Door

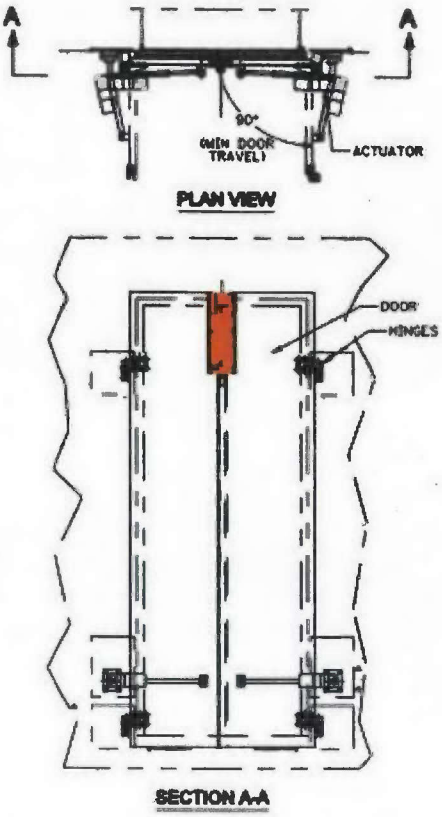

4.1.1.12 Shielded and Containment Doors

Component Tag Numbers:
24590-LAW-AD-LFH-DOOR-00015 – Lidding/Decontamination Shielded Door (North)
24590-LAW-AD-LFH-DOOR-00019 – Lidding/Decontamination Shielded Door (South)
24590-LAW-AD-LFH-DOOR-00022 – Decontamination/Swabbing Containment Door (North)
24590-LAW-AD-LFH-DOOR-00020 – Decontamination/Swabbing Containment Door (South)
24590-LAW-AD-LFH-DOOR-00016 – Swabbing/Export Containment Door (North)
24590-LAW-AD-LFH-DOOR-00012 – Swabbing/Export Containment Door (South)
Refer to: 24590-LAW-3PS-ADDM-T0003, *Engineering Specification for LAW Bogie and Monorail Shield Doors*

The lidding, decontamination, swabbing and monitoring/export areas are separated by a containment door or shielding door. The doors prevent migration of contamination. When closed, the door provides an engineered air gap to maintain airflow from the lower contamination area to the higher contamination area [3.9.1.1]. The door is opened to allow the bogie and container to pass through. The doors are slightly different depending whether it provides shielding or has through-wall recovery capability.

The doors move horizontally using rail-mounted wheels and an electrically powered rack-and-pinion drive. The door major components include horizontal sliding door, door lock, rack-and-pinion drive, electric motor, instrumentation and interlock systems.

The lidding/decontamination shielded door is located in the decontamination area. This door is 2 inch thick steel for shielding (24590-CM-POA-ADDH-00005-06-180). When the shield door is closed and a container is in the decontamination area, personnel can enter the lidding area (if a container is not present in the lidding area) for recovery tasks (mainly moving the bogie recovery block eastward). If the door drive fails, personnel enter the decontamination area (from the swabbing area) to disconnect the coupling between the pinion gear shaft and motor. Then a portable winch is used to open or close the door.

The decontamination/swabbing containment door is located in the decontamination area. This door is 1" thick and has a torque limiter. If the door drive fails, the door can be remotely operated using a through wall, horizontal retrieval recovery tool. Personnel entry is not required to disconnect the gear shaft because there is a torque limiter coupling between the pinion gear shaft and motor.

The swabbing/export containment door is located in the swabbing area. This door serves as a boundary between the C5/C3 swabbing area and the C2 monitoring/export area. This door does not provide shielding. It does not have a torque limiter, so door drive failure requires personnel entry into the swabbing area to operate the door.

Figure 4-29 - Shielded or Containment Door (typical)

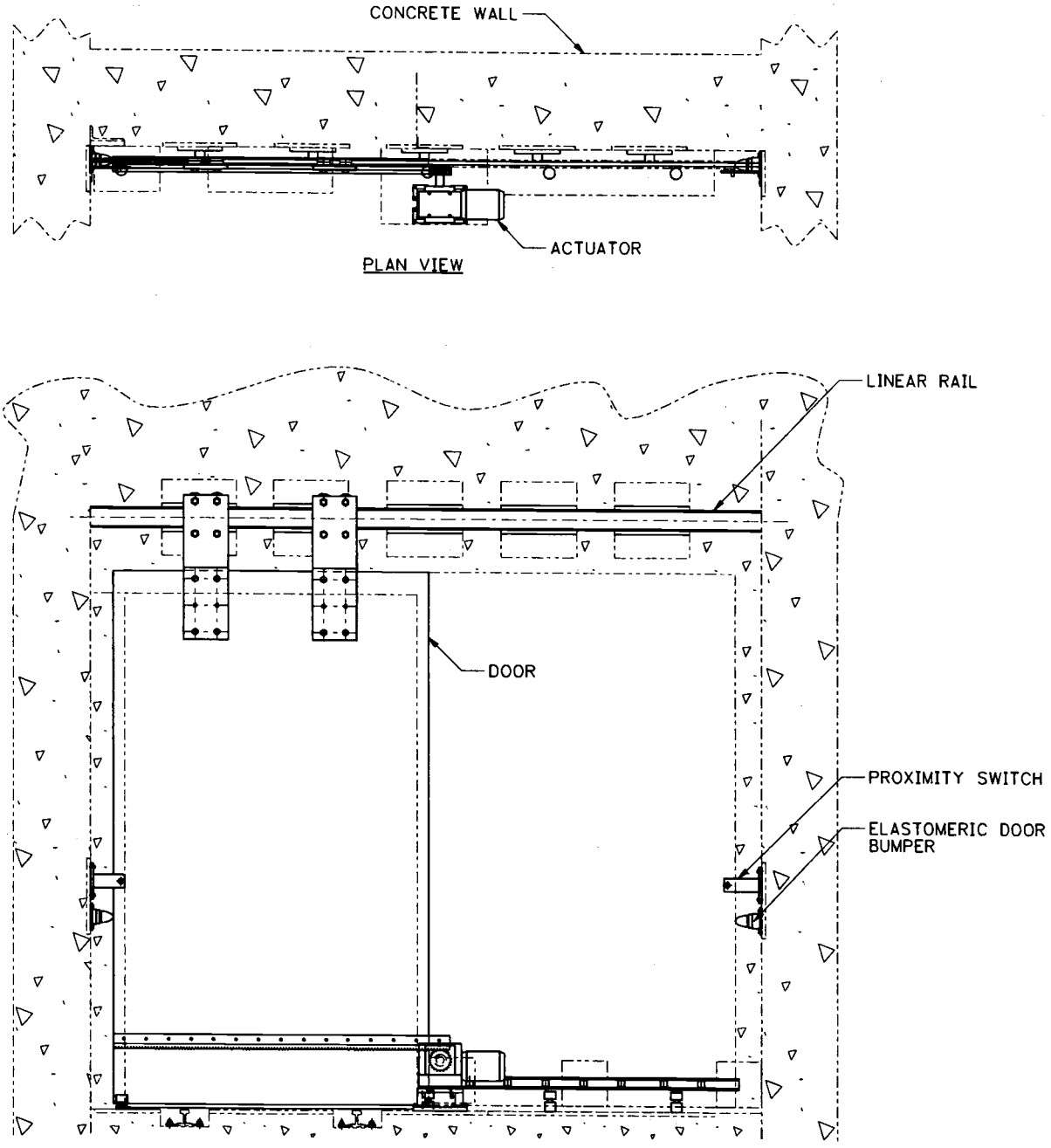

4.1.1.13 Shielded Personnel Access Doors (SPAD)

Component Tag Number: 24590-LAW-AD-LFH-DOOR-00004 – Lidding SPAD (North)
Component Tag Number: 24590-LAW-AD-LFH-DOOR-00006 – Lidding SPAD (South)
Component Tag Number: 24590-LAW-AD-LFH-DOOR-00005 – Swabbing SPAD (North)
Component Tag Number: 24590-LAW-AD-LFH-DOOR-00007 – Swabbing SPAD (South)
Refer to: 24590-LAW-3PS-MX00-T0002, *Engineering Specification for LAW Shielded Personnel Access Doors – Common Items*

The SPADs provide personnel access into the lidding and swabbing areas on the +3 ft level. Then access to the decontamination and monitoring/export areas would be through the shielding or confinement door opening between the areas. The monitoring/export area also has its own SPAD (LEH-DOOR-00007/00005), which is part of system LEH. The SPADs are manually operated swinging doors that are designed to provide shielding for out-cell personnel during finishing line operations. They also provide a means for cell entry, maintenance operations and a path for the introduction of finishing line consumables and small LFH equipment.

4.1.1.14 Bogie Door and Export Hatch Shutters

Component Tag Number: 24590-LAW-SY-LFH-SPAN-00001 – Bogie Door Shutter (North)
Component Tag Number: 24590-LAW-SY-LFH-SPAN-00002 – Bogie Door Shutter (South)
Component Tag Number: 24590-LAW-SY-LFH-SPAN-00003 – Export Hatch Shutter (North)
Component Tag Number: 24590-LAW-SY-LFH-SPAN-00004 – Export Hatch Shutter (South)
Refer to: 24590-LAW-3PS-MQLL-T0001, *Engineering Specification for LAW Container Stands / Bogie Shutters*

The shutters are installed to reduce the size of the door or hatch opening. This is required to increase the air velocity between contamination zones when the door or hatch is opened.

The bogie door shutter is installed in the Swabbing/Export Containment Door opening between the swabbing area (C3/C2) and monitoring/export area (C2). The shutter opening is large enough to allow the swabbing bogie and container to pass.

The export hatch shutter is installed in the Decontamination/Export Trap Door opening between the monitoring/export area (C2) and export area (C1). The shutter opening is large enough to allow a container with the lifting grapple and crane hook to pass.

4.1.1.15 Shield Windows

Component Tag Number: 24590-WTP-AD-20-SWIN-00008 – Swabbing Shield Window (North)
Component Tag Number: 24590-WTP-AD-20-SWIN-00009 – Decon Shield Window (North)
Component Tag Number: 24590-WTP-AD-20-SWIN-00010 – Lidding Shield Window (North)
Component Tag Number: 24590-WTP-AD-20-SWIN-00011 – Sampling Shield Window (North)
Component Tag Number: 24590-WTP-AD-20-SWIN-00012 – Swabbing Shield Window (South)
Component Tag Number: 24590-WTP-AD-20-SWIN-00013 – Decon Shield Window (South)
Component Tag Number: 24590-WTP-AD-20-SWIN-00014 – Lidding Shield Window (South)
Component Tag Number: 24590-WTP-AD-20-SWIN-00015 – Sampling Shield Window (South)
Refer to: 24590-WTP-3PS-MX00-T0002, *Engineering Specification for Shielded Glass Windows*

Each finishing line has four shield windows, one at the sampling station, lidding station, decontamination station, and swabbing station. Shield windows protect operators from radiation and contamination while offering a clear view of the MSM, lidding equipment, decontamination power manipulators, and swabbing power manipulators [3.4.4.3]. Shield windows also enable visual inspection of the container flange and lid engagement pins. In conjunction with in-cell cameras, they also assist in guiding off-normal operations.

Figure 4-30 - Shield Window

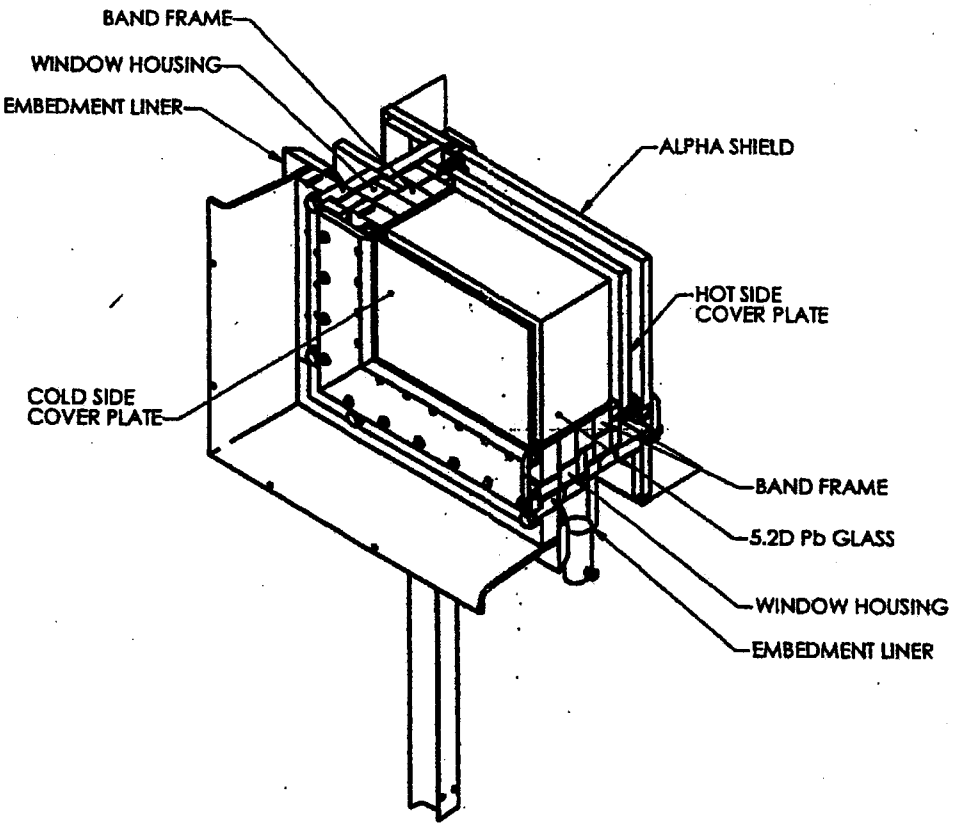

4.1.1.16 Master Slave Manipulators

Component Tag Number: 24590-LAW-MJ-LFH-MANIP-00021 Sampling Station (North/West)
Component Tag Number: 24590-LAW-MJ-LFH-MANIP-00022 Sampling Station (North/East)
Component Tag Number: 24590-LAW-MJ-LFH-MANIP-00023 Sampling Station (South/West)
Component Tag Number: 24590-LAW-MJ-LFH-MANIP-00024 Sampling Station (South/East)
Component Tag Number: 24590-LAW-MJ-LFH-MANIP-00025 Lidding Station (North/West)
Component Tag Number: 24590-LAW-MJ-LFH-MANIP-00026 Lidding Station (North/East)
Component Tag Number: 24590-LAW-MJ-LFH-MANIP-00027 Lidding Station (South/West)

Component Tag Number: 24590-LAW-MJ-LFH-MANIP-00028 Lidding Station (South/East)
Refer to: 24590-WTP-3PS-M000-T0012, *Engineering Specification for Master Slave Manipulators for PTF, HLW, LAW and LAB*

Master slave manipulators allow an operator to direct complex motions within the radioactive and contaminated finishing line from the relative safety of the operations corridor. The in-cell slave arm is capable of extension and rotation in two planes, giving it a motion envelope approximating a conical segment. The arm's end is equipped with two fingers or tongs capable of a gripping force of about 50 lb. The tong assembly can be rotated either clockwise or counterclockwise approximately 160 degrees. Above the tongs is a "wrist" joint allowing the tong assembly to be lowered or raised, and the entire tong and wrist assembly can be rotated about the axis of the arm either clockwise or counterclockwise approximately 170 degrees.

The operator controls the slave arm motion with the master arm. The MSMs are paired and located to optimize view and control with respect to a shield window. Each finishing line has a pair of MSMs associated with each of two shield windows. The complete MSM, master arm, slave arm, and seal tube can be removed out-cave [3.8.1.2]. Manually powered MSMs are chosen for simplicity.

The MSMs consist of the following: Master (out-cell) and slave (in-cell) arms that are mechanically linked by a seal tube inside a through-wall liner, hard travel limits, electrically powered master slave X, Y and Z-axis drives and motors, electrical instrumentation, and interlock systems provide the required functionality.

The sampling station MSMs move empty vials from the vial holder to the shard tray, remove the vial lids, and place the funnel tray over the vials. The MSM uses the shard pickup assembly nozzle (or a tool to be determined) to create glass shard samples, and positions the nozzle to vacuum up the shards and empty the shards into the sample vials [3.8.1.1]. The MSM removes the funnel tray, attaches the vial lids, moves the sample vials to the vial holder, and transfers filled sample vials to the shard sampling posting port. The MSMs also uses the MSM vacuum tool to clean up or remove excess inert fill material in the container [3.8.1.1]. The MSMs also handle items imported through the posting port and can assist in recovery from abnormal conditions.

The lidding station MSMs use the seal prep tool to clean the container lid seal area and help guide and position the lidding press and recovery tool as needed. The MSMs can assist in recovery from abnormal conditions.

Figure 4-31 - Master Slave Manipulator

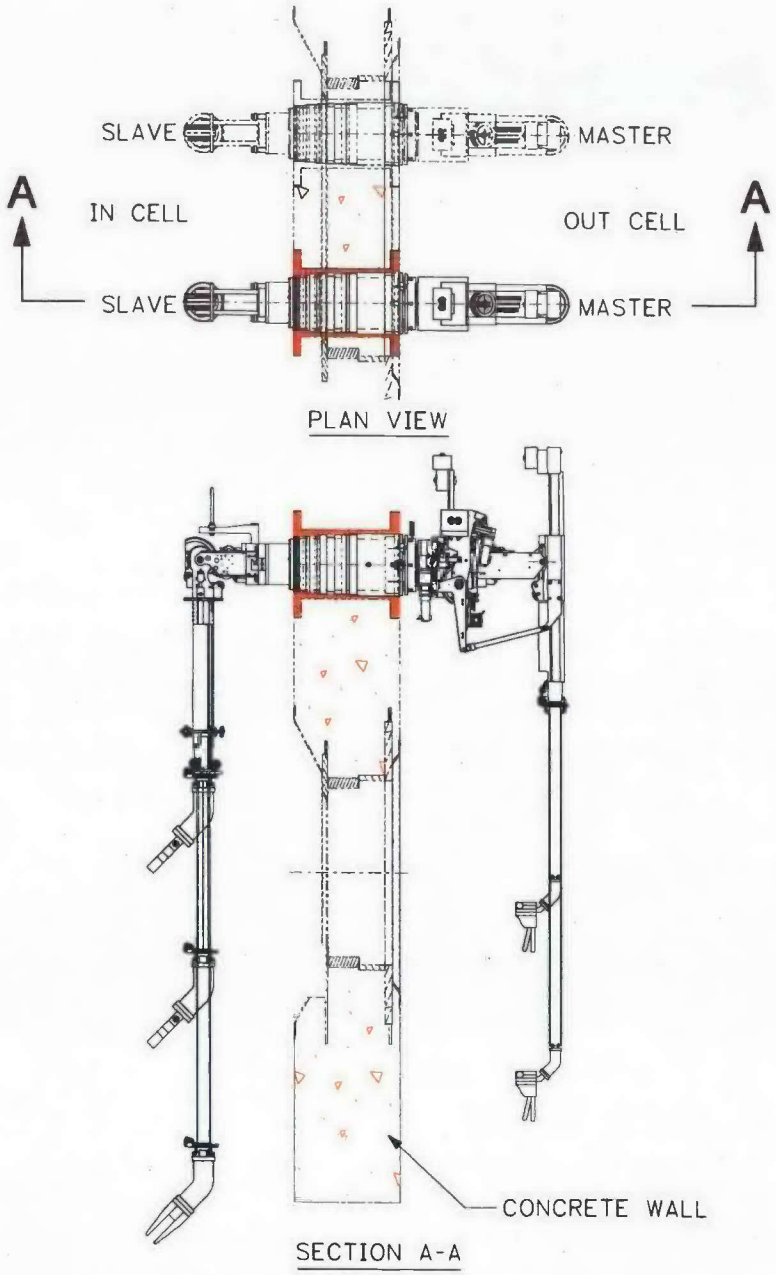

4.1.1.17 Posting Ports

Component Tag Number: 24590-LAW-JA-LFH-SMPLR-00009 – Shard Sampling Posting Port (North)
Component Tag Number: 24590-LAW-JA-LFH-SMPLR-00010 – Shard Sampling Posting Port (South)
Component Tag Number: 24590-LAW-JA-LFH-SMPLR-00006 – Swab Posting Port (North)
Component Tag Number: 24590-LAW-JA-LFH-SMPLR-00007 – Swab Posting Port (South
Refer to: 24590-WTP-3PS-M000-T0006, *Engineering Specification for WTP Facility Posting Port*

A posting port is used to transfer small objects (swabs, consumables, samples) between the finishing line and a glovebox. [3.12.1.1] Posting ports are through-wall openings equipped with in-cell and out-cell shield doors and a motorized sliding tray mounted on rollers. Sealed drives and bearings are used throughout. The doors are interlocked to ensure only one door can be open at any given time. The in-cave doors and tray are motor operated. The out-cave doors open into the glovebox and are manually operated using the glovebox gloves. The posting port tray is 12 in. by 19 in. and has a 50 lb capacity.

The shard sampling posting port is used to transfer glass shard sample vials from the sampling station to the glovebox. The swab posting post is used to transfer new and used swabs between the swabbing station and glovebox.

4.1.1.18 Gloveboxes

Component Tag Number: 24590-LAW-M0-LFH-GB-00001 – Shard Sampling Glovebox (South)
Component Tag Number: 24590-LAW-M0-LFH-GB-00002 – Shard Sampling Glovebox (North)
Component Tag Number: 24590-LAW-M0-LFH-GB-00003 – Swab Monitoring Glovebox (South)
Component Tag Number: 24590-LAW-M0-LFH-GB-00004 – Swab Monitoring Glovebox (North)
Refer to: 24590-WTP-3PS-M000-T0007, *Engineering Specification for WTP Facility Posting Port Glovebox*

Gloveboxes are sealed enclosures that allow viewing and handling of samples and small consumables via view ports and gloves mounted and sealed to the glovebox enclosure. The gloveboxes are vented to the cell, making them part of the cascading ventilation system from lower to higher areas of contamination. Glovebox internal pressure is negative with respect to the surrounding corridor. [3.12.1.3] Each posting port is connected to its own glovebox.

The shard sampling glovebox receives shard sample vials from the shard sampling posting port. The sample vial is bagged out and manually transferred to the Analytical Laboratory.

The swab monitoring glovebox receives used swabs from the swabbing station posting port and monitors the swabs for contamination. The glovebox is also used to introduce clean swabs into the cell.

Figure 4-32 - Posting Port

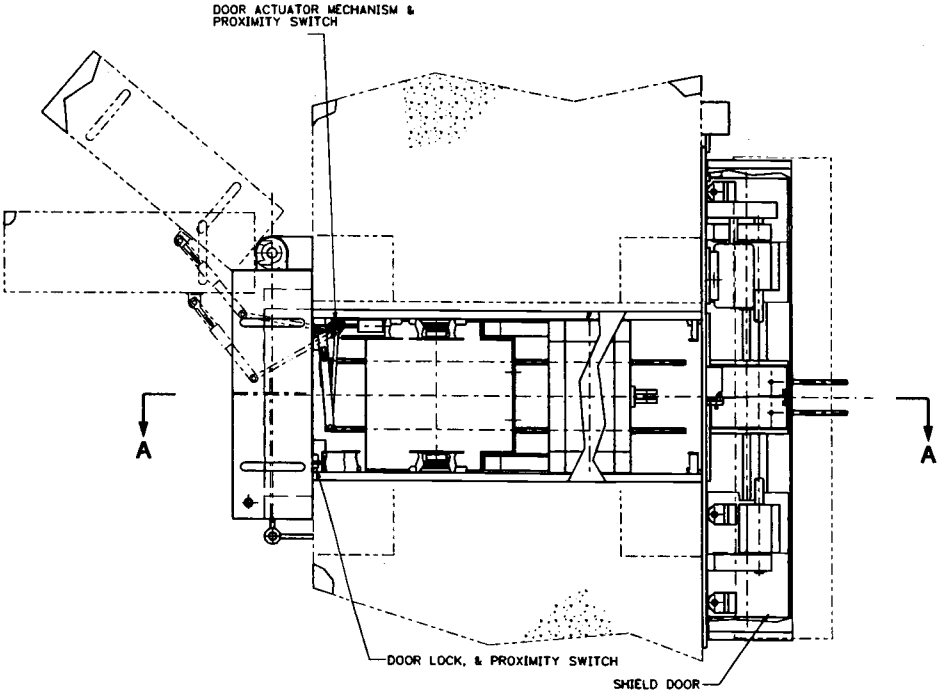

PLAN VIEW

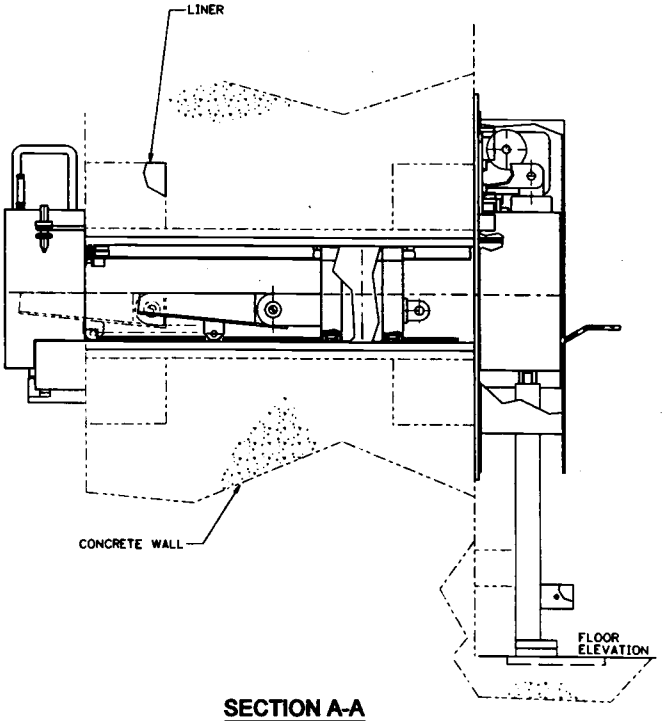

SECTION A-A

Figure 4-33 - Glovebox

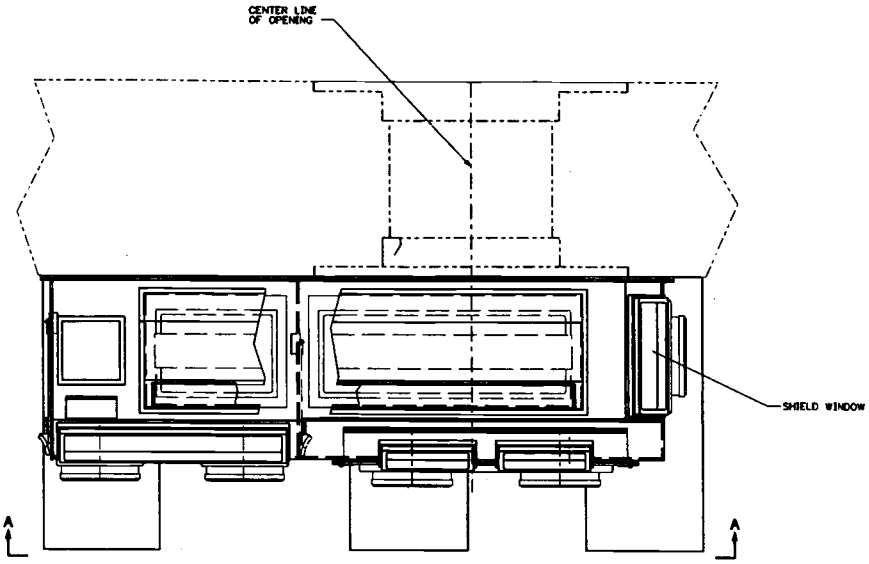

PLAN VIEW

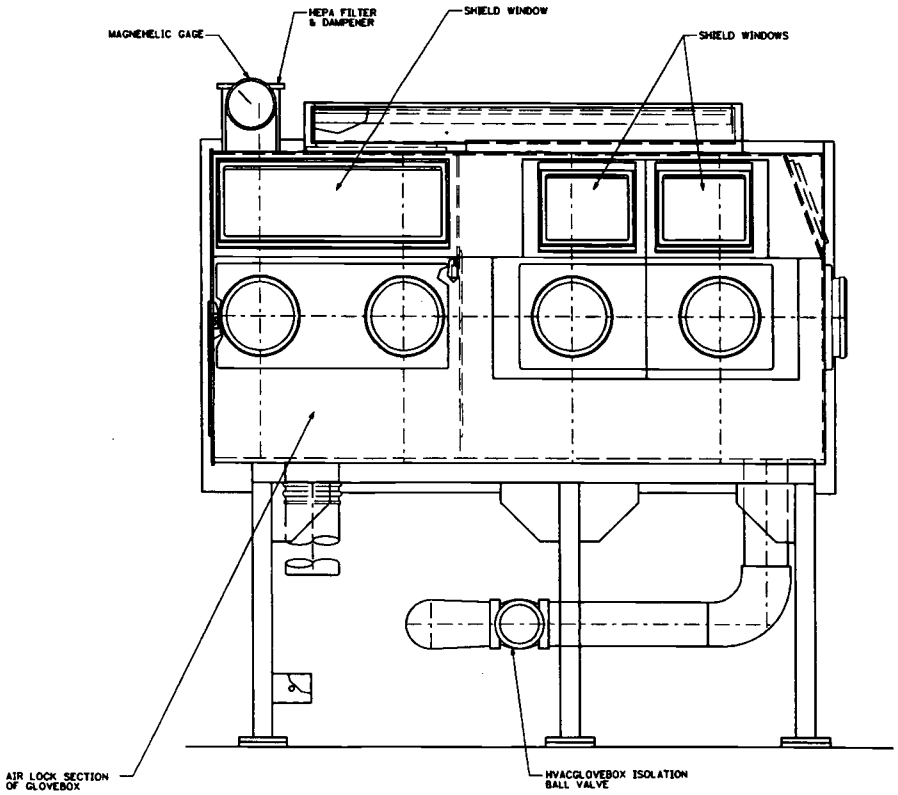

VIEW A-A

4.1.1.19 System Hardware and Software

The system hardware required to operate the system is shown in system block diagrams 24590-LAW-J1-LFH-00005 and 24590-LAW-J1-LFH-00018 through -00025. Software to operate LFH equipment and to communicate with the ICN via hardwired I/O and/or Profibus DP is supplied by the equipment seller. Interlocks and permissives are defined in 24590-LAW-M1-LFH-00001, *Mechanical Sequence Diagram (MSD) for LAW Vitrification System LFH MSD Detailing LAW Finishing Handling.*

4.1.1.20 Local Operator Interfaces and Closed Circuit Television Cameras

There are 8 permanent local operator interfaces (LOI) in system LFH, located in LC0105/0104 for the north line and LC0107/0108 for the south line. There is a LOI at the following stations: shard sampling and inert fill, lidding, decontamination, and swabbing. Each LOI has access to the local CCTV cameras.

There are 4 CCTV cameras in each lidding area, 2 cameras in each decontamination area, 2 cameras in each swabbing area, one camera in each monitoring/export area, and one camera in the line transfer station as follows (24590-LAW-J0-PTJ-00002 and 00003) [3.4.4.3]. The CCTV at the lidding station is used to inspect the container flange sealing surfaces prior to lid insertion and to view the lidding process.

North Finishing Line

- Lidding Area (L-0109D) XT-2056, XT-2059, XT-2061, XT-2063
- Decontamination Area (L-0109C) XT-2064, XT-2067
- Swabbing Area (L-0109B) XT-2070, XT-2073
- Monitoring/Export Area (L-0109E) XT-2076

South Finishing Line

- Lidding Area (L-0115D) XT-2031, XT-2036, XT-2038, XT-2040
- Decontamination Area (L-0115C) XT-2041, XT-2044
- Swabbing Area (L-0115B) XT-2047, XT-2050
- Monitoring/Export Area (L-0115E) XT-2053
- Line Transfer Station (L-0217C) XT-2146

4.1.2 Boundaries and Interfaces

System LFH boundaries and interfaces are listed in Table 4-1.

Table 4-1 - System LFH Interfaces

LFH Interfaces with	Nature of Interface
LPH – Container Pour Handling System	LPH bogie in L-B025B provides filled, cooled, LAW container to Lidding Monorail Hoist LFH-HST-00008/00009 (24590-LAW-M7-00001003/1008)
C5V – C5 Ventilation System	Provides suction to receive exhaust (air, carbon dioxide and particulates) from decontamination manipulator end effectors (24590-LAW-M8-C5V-00001003)
GFR – Glass Formers Reagent System	Supplies metered volume of glass former to Inert Fill Hoppers LFH-MHAN-00002/00004. (24590-LAW-M6-GFR-00001001/2001)
CDG – Carbon Dioxide Gas System	Supplies carbon dioxide pellets in transport air and heated air to decontamination manipulator end effectors LFH-TOOL-00006/20/25/26 (24590-LAW-M6-CDG-00002001/2002)
LEH – Container Export Handling System	LEH crane receives lidded, decontaminated, LAW container from swabbing bogie in L-0109E/0115E. (24590-LAW-M7-LFH-00001007/1012)
LVE – Low Voltage Power System	Supplies electrical power to System LFH equipment
MHJ – Mechanical Handling Control System	Provides control and monitoring of system LFH equipment
PSA – Plant Service Air System	Supplies plant service air to vacuum eductors, pneumatic actuators and cooling air (24590-LAW-M6-PSA-00003001/2002)
PTJ – Process and Mechanical Handling CCTV System	Provides remote viewing in the finishing lines and line transfer station. (24590-LAW-J0-PTJ-00002/3)

4.1.3 Physical Layout and Location

Refer to drawings 24590-LAW-P1-P01T-00002, 00003, and 00004, *LAW Vitrification Building General Arrangement Plan at EL. 3'-0", EL. 22'-0"* and *EL. 28'-0"*, for room locations.

The LFH system is composed of two, parallel, container finishing lines at the +3 ft elevation in the southeast corner of the LAW Facility. The two finishing lines (designated north and south) are separated by an east

west wall at column line H. The equipment location in each line is the mirror image of the other line. Each line is approximately 15 ft W × 45 ft L × 25 ft H. The north finishing line receives a container from the system LPH north bogie. The south finishing line receives a container from the system LPH south bogie.

The North line is located in rooms L-0109D/C/B/E and operated from corridors LC0105/0104. The South line is located in rooms L-0115D/C/B/E and operated from corridors LC0107/0108. The LAW container enters System LFH at L-0109D/0115D, travels west to east on bogies, and exits at L-0109E/0115E. The bogie tracks run continuously between the rooms. A shielding/confinement door or confinement door is opened to allow a bogie to travel between rooms.

A line transfer station in room L-0217C (located above L-0109C and L-0115C) at the +28 ft elevation can be used to transfer containers between the North and South lines during off-normal conditions. The transfer station can also be used to remove failed equipment or introduce new equipment into the lines.

Most equipment can be maintained in place after the LAW container has been removed. Platforms are provided to access equipment. All maintenance is hands on [3.4.4.2]. The finishing lines are dual-classified (R3/R5, C3/C5) dependent on the presence of an LAW container or other source.

4.1.3.1 Lidding Area (L-0109D/0115D)

The container is imported through the lidding trap door (LFH-DOOR-00009/00010) on the west side of the room. The lidding monorail hoist retrieves the container from the system LPH bogie and places the container on the lidding bogie at the sampling station. The bogie moves the container (west to east) to the inert fill station and lidding station. After completion of lidding, the lidding bogie moves the container to the decontamination area.

The lidding area is classified R5/C5 when a container is in the area and R3/C3 once a container is removed. As a result, the lidding area is classified R5/R3/C5/C3. Personnel access to the lidding area is through a shielded personnel access door (LFH-DOOR-00004/00006) from L-0108A/0114A. The monorail hoist is serviced from a platform (LP0109F/0115F) at elevation +19 ft 9.38 in. and the jib cranes are serviced from a platform (LP0109D/0115D) at elevation +17 ft.

There are 4 CCTV cameras in each lidding area:

- XT-2056/2031
- XT-2059/2036
- XT-2061/2038
- XT-2063/2040

Lidding area general equipment includes:

- Lidding Bogie (LFH-TRLY-00007/00006)
- Monorail Hoist (LFH-HST-00001/00009)
- Grapple (LFH-TOOL-00010/00009)

The sampling station equipment includes:

- Master Slave Manipulators (LFH-MANIP-00021/00022 and 00023/00024)

- Shield Window (20-SWIN-00011/00015)
- Shard Table (LFH-SMPLR-00002/00004)
- Shard Tray (LFH-SMPLR-00005/00003)
- Sample Vial Holder (LFH-LID-00015/00016) located on MSM tool tray
- Shard Pickup Assembly (LFH-SMPLR-00001/00008)
- MSM Tool Tray (LFH-MANIP-00003/00005)
- Shard Sampling Posting Port (LFH-SMPLR-00009/00010)
- Shard Sampling Glovebox (LFH-GB-00002/00001) located in LC0105/0107

The inert fill station equipment includes:

- Inert Fill Hopper (LFH-MHAN-00002/00004)
- MSM Vacuum Tool (LFH-TOOL-00029/00030), wand on MSM tool tray

The lidding station equipment includes:

- Master Slave Manipulators (LFH-MANIP-00025/00026 and 00027/00028)
- Shield Window (20-SWIN-00010/00014)
- Lidding Jib Crane (LFH-CRN-00006/00003)
- Sealing Jib Crane (LFH-CRN-00007/00004)
- Lid Press (LFH-LID-00025/00026) and Parking Stand (LFH-LID-00027/00028)
- Lid Magazine (LFH-LID-00023/00024)
- Lid Magazine B (LFH-LID-00035/00036)
- Lid Recovery Tool (LFH-LID-00029/00030) and Parking Stand (LFH-LID-00031/00032)
- Seal Prep Tool (LFH-LID-00039/00040), stored on the Lidding Tool Tray
- Lidding Tool Tray (LFH-LID-00037/00038)
- Lid Disposal Bin (LFH-LID-00033/00034)

The container lidding position, lid magazine, lid magazine B and lid press parking stand are located on the same radius arc of the lidding jib crane. The container lidding position and lid recovery tool parking stand are located on the same radius arc of the sealing jib crane.

4.1.3.2 Decontamination Area (L-0109C/0115C)

The decontamination area is located east of the lidding area. The dual rail hoist picks up the lidded container from the lidding bogie, suspends it above decontamination turntable for bottom decontamination, and lowers the container onto the decontamination turntable for side and top decontamination. The power manipulator directs a carbon dioxide pellet stream to decontaminate the container exterior surfaces. After decontamination is complete, the dual rail hoist transfers the container onto the decontamination bogie, which transfers the container to the swabbing area. The hoist grapple is also decontaminated by the CO_2 decontamination system.

The decontamination area is classified R5/C5 when a container is in the area and R3/C3 once a container is removed. As a result, the decontamination area is classified R5/R3/C5/C3. A shielded containment door (LFH-DOOR-00015/00019) separates the lidding area from the decontamination area. A confinement door (LFH-DOOR-00022/00020) separates the decontamination area from the swabbing area. For maintenance, personnel would enter from the lidding area or the swabbing area. The hoist is serviced from a platform (LP109C/115C) at the +20 ft elevation. A trap door (LFH-DOOR-00014/00011) in the ceiling provides access to the line transfer station (L-0217C).

There are 2 CCTV cameras in each decontamination area:

- XT-2064/2041 on east wall
- XT-2067/2044 on west wall

The decontamination station equipment includes:

- Shield Window (20-SWIN-00009/00013)
- Dual Rail Hoist (LFH-HST-00010/00005)
- Grapple (LFH-TOOL-00011/00012)
- Decontamination Turntable (LFH-TTBL-0001/00002)
- Upper Decontamination Power Manipulator (LFH-MANIP-00001/00008)
- Lower Decontamination Power Manipulator (LFH-MANIP-00011-00012)
- Manipulator End Effectors (LFH-TOOL-00025/00006 and 00026/00020)
- Manipulator Tool Trays (LFH-MANIP-00015/00016 and 00017/00018)
- Decontamination Bogie (LFH-TRLY-00005/00008)

4.1.3.3 Swabbing Area (L-0109B/0115B)

The swabbing area is located east of the decontamination area. The dual rail hoist picks up the lidded, decontaminated container from the decontamination bogie, suspends it above swabbing turntable for bottom swabbing, and lowers the container onto the swabbing turntable for side and top swabbing. The power manipulator swabs selected areas of the container exterior surfaces. The swab is transferred through the posting post to a glovebox, where the swab is monitored for contamination. Upon confirmation that contamination is below acceptance limits, the swabbing bogie transfers the container to the monitoring/export area.

The swabbing area is classified R5 when a container is in the area and R3 once a container is removed. Prior to the container being surveyed the area is potentially contaminated so it has a C3 classification. Once the container is surveyed and verified to meet the release limits, the area is classified C2. As a result, the swabbing area is classified R5/R3/C3/C2. A confinement door (LFH-DOOR-00016/00012) separates the swabbing area from the monitoring/ export area. Personnel access to the swabbing area is through a shielded personnel access door (LFH-DOOR-00005/00007) from L-0109A/0115A. The dual rail hoist is serviced from platform LP0109B/0115B at elevation +20 ft.

There are 2 CCTV cameras in each swabbing area:

- XT-2070/2047 on east wall

- XT-2073/2050 on west wall

The swabbing station equipment includes:
- Shield Window (20-SWIN-00008/00012)
- Dual Rail Hoist (LFH-HST-00011/00006)
- Grapple (LFH-TOOL-00016/00015)
- Swabbing Bogie (LFH-TRLY-00001/00015)
- Swabbing Turntable (LFH-TTBL-0005/00006), located on the Swabbing Bogie
- Swabbing Power Manipulator (LFH-MANIP-00002/00009)
- Swabbing Manipulator End Effectors (LFH-TOOL-00004/00005)
- Swab Posting Port (LFH-SMPLR-00006/00007)
- Swab Monitoring Glovebox (LFH-GB-00004/00003) located in LC0104/0108

4.1.3.4 Monitoring/Export Area (L-0109B/0115B)

The monitoring/export area is east of the swabbing area. The finished container on the swabbing bogie is monitored for external surface radiation rate. System LEH crane lifts the finished container through a trap door (LFH-DOOR-00002/00012) in the monitoring/export area ceiling at elevation +22 ft to L-0127 for facility export. A failed bogie can be retrieved into the monitoring/export area for maintenance.

The monitoring/export area is classified R5 when a container is present and R3 when the container is removed. As a result, the monitoring/export area is classified R5/R3/C2. Personnel access to the monitoring/export area is through a system LEH shielded personnel access door (LEH-DOOR-00007/00005) from L-0127.

There is one CCTV camera in each monitoring/export area:
- XT-2076/2053 on west wall

Monitoring/Export Area equipment includes:

- Bogie Recovery System (LFH-RCVY-00004/00003)
- Gamma Radiation Monitor (RS-4201/2001)

4.1.3.5 Line Transfer Station (L-0217C)

The line transfer station is located at the +28 ft elevation above the finishing line decontamination areas. A monorail hoist, which travels north south, is used to transfer containers between the two finishing lines. This removes the radiation source from a finishing line, which allows personnel to enter that line to perform hands on maintenance. The line transfer station is used to remove empty lid holders and introduce filled lid holders. It can also be used to remove failed equipment or introduce replacement equipment.

The line transfer station, which is about 32 ft W × 20 ft L × 20 ft H, has a monorail hoist, two trap doors (one door to each finishing line), and an equipment door between the line transfer station and staging/maintenance area (L-0217A). Platform LP0217A at elevation +37 ft 6.25 in. provides access for

inspection and maintenance of the hoist. The Transfer Station is classified R5/R3/C5/C3 and the staging/maintenance area is classified R3/C3.

There is one CCTV camera in the line transfer station.

- XT-2146

Line Transfer Station equipment includes:

- Monorail Hoist (LFH-HST-00001)
- Trap Doors (LFH-DOOR-00014/00011)
- Equipment Door (LFH-DOOR-00021)
- Grapple (LFH-TOOL-00014)
- Grapple Maintenance Stand (LFH-MHAN-00008)

Figure 4-34 - Plan View of System LFH at Elevation +3 ft

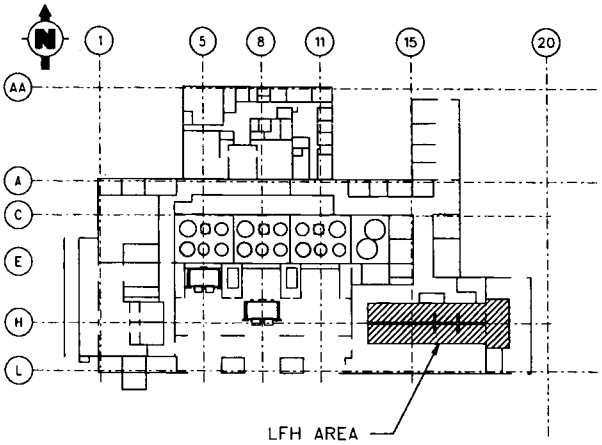

KEY PLAN AT EL +3'-0"

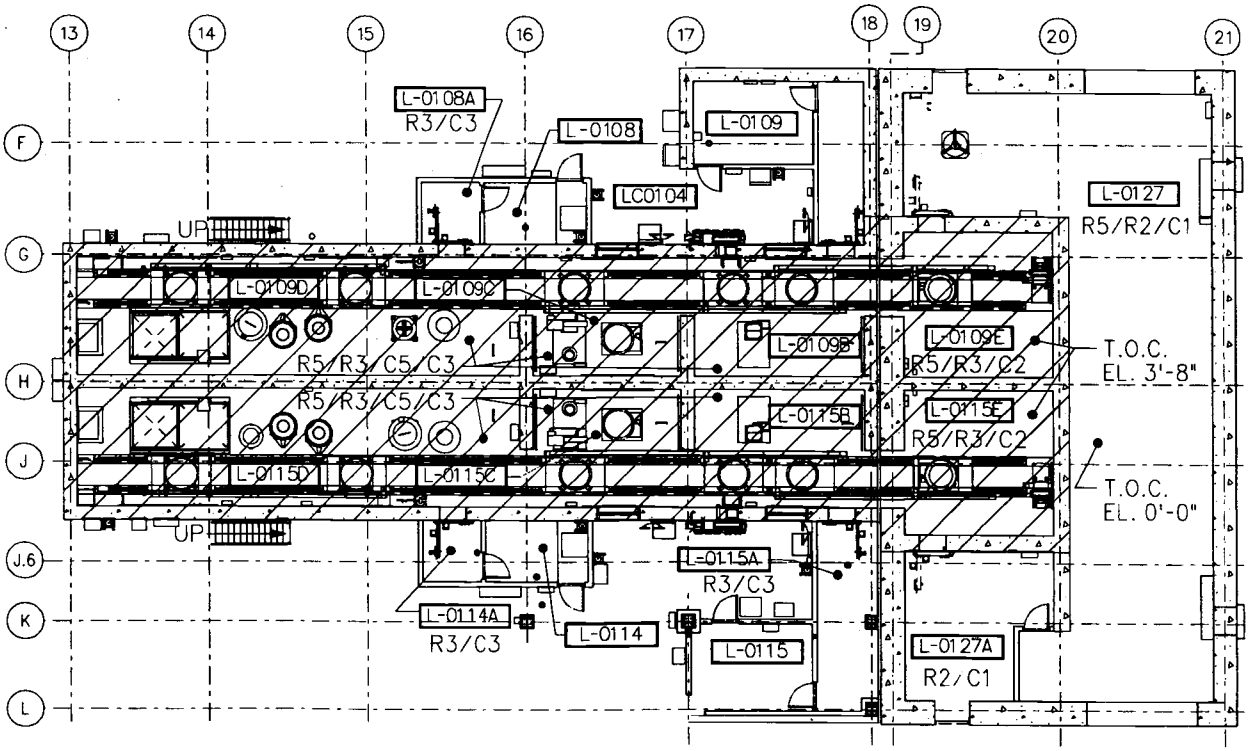

PARTIAL PLAN AT EL 3'-0"

4.1.4 Principles of Operation

The finishing line operation sequences are remotely controlled through the ICN. The operators use LOIs located in the corridor outside the finishing line to initiate sequences, manually raise and lower the hoists, and to respond to operator prompts requiring action. The operations sequence for a container is described in the following sections.

4.1.4.1 Container Import, Level Measurement and Lidding

Operations personnel initiate the sequence to import a filled ILAW container from the pour tunnel to the finishing line. The lidding bogie is at sampling station (park position). The lidding trap door is opened. The lidding monorail hoist is manually operated to raise the container from the system LPH bogie and lower it onto the lidding bogie. The lidding trap door is closed.

The automatic sequence then prompts the operator to obtain a glass shard sample, if required. The sample vial is transferred through a posting port to a glovebox. Then the sequence prompts the operator to measure the glass fill height level. If the glass level is low, the bogie moves container to the inert fill position and inert fill is added. The bogie moves back to sampling station to measure the glass fill height again. If needed, the operator uses the MSM vacuum tool to remove excess inert fill material. The shard tray measures the container level to confirm level specification is met. If the glass level is acceptable, the bogie moves the container to the lidding station.

The operator cleans the container flange sealing area if needed using the lid seal prep tool and MSMs, and then initiates the automatic sequence to begin the lidding process. The lid press retrieves a lid from the lid magazine and then is moved over the container. The lid press inserts and seals the lid onto container. If the lid fails to engage, the operator uses the lid recovery tool to remove the lid and the lidding process is repeated.

When the lid is properly engaged on the container, the shield door is opened. The lidding bogie moves the container to the decontamination area.

4.1.4.2 Container Decontamination

The operator initiates the sequence to transfer the container to the decon station using the lidding bogie. The lidding/decon shield door opens and the container is moved into the decon area. Operations personnel manually use the dual rail hoist to raise the container from the lidding bogie and suspend the container over the decontamination turntable. The automatic sequence then moves the lidding bogie to the park position in the lidding area. The operator is prompted to verify that the lidding bogie is clear of the door. Then the shield door is closed.

The operator is prompted to determine that the container is ready for decontamination. When the container is ready, the decontamination sequence is run. The lower power manipulator directs the CO_2 nozzle to decontaminate the container bottom (hoist hook rotates) and turntable (rotates). Operations manually lowers the hoist to place the container onto the turntable. Upper and lower power manipulators decontaminate the container top and sides (turntable rotates). The operator positions the grapple for decontamination and the upper manipulator decontaminates the grapple.

The operator initiates an automatic sequence to transfer the container to the swabbing area. The containment door between the decontamination and swabbing areas. The decontamination bogie travels from the swabbing area to the decontamination area opens. Operations manually hoists the container from the turntable and lowers it onto the decontamination bogie. The decontamination bogie moves the container to the swabbing area. The operator is prompted to verify that the decontamination bogie is clear of the door. Then the containment door is closed.

4.1.4.3 Container Swabbing

The automatic sequence for swabbing is initiated. Operations personnel manually use the dual rail hoist to raise the container from decontamination bogie. The decontamination bogie travels to the park position in the swabbing area. The operator is prompted to select the swab patterns. The automatic sequence then runs and the power manipulator swabs the container bottom while the hoist load block grapple rotates. The swabs are transferred in and out of the area through a posting port and a swab monitoring glovebox, where swabs are monitored for contamination.

If contamination is below allowable limits, the containment door between the monitoring/export area and swabbing area opens. The swabbing bogie travels from the monitoring/export area to the swabbing area. The swabbing bogie is then swabbed to check for contamination. If it is below acceptable limits, then Operations personnel manually use the dual rail hoist to lower the container onto the swabbing bogie turntable. Clean swabs are staged and the operator resumes the container swabbing cycle. The power manipulator swabs the container top and side (turntable rotates). Swabs are transferred through a posting port to a glovebox, where swabs are monitored for contamination. If contamination is below limits, the operator initiates a new sequence for the swabbing bogie to move the container to the monitoring/export area and the containment door is closed.

If at any time the swab monitoring indicates contamination is above limits, the container is returned to the decontamination area and the decontamination sequences are re-run.

4.1.4.4 Container Monitoring and Export

The swabbing bogie is positioned at the export station. Radiation monitors measure the container surface radiation. When the measured dose rate is within acceptable limits the container is ready for export. Export operations are included in the LEH SDD including the LFH trap door operation.

4.1.4.5 Line Transfer Station (container)

When a container needs to be transferred from one finishing line to the other, the line transfer automatic sequence is initiated. The line transfer trap door to the finishing line containing the container is opened. Operations personnel manually use the line transfer hoist to pick up the container on the lidding or decontamination bogie. Then the line transfer trap door closes.

The adjacent trap door is opened. Operations personnel use the line transfer hoist to lower the container onto the other lidding or decontamination bogie. Then the line transfer trap door closes. Removing the container from a finishing line allows manned entries to be made.

4.1.4.6 Line Transfer Station (equipment)

When equipment needs to be brought in and out of the finishing lines with the line transfer hoist, the operator manually selects a sequence or manually controls the equipment to perform the intended operations. The line transfer trap door to the finishing line containing the equipment is opened. Operations personnel manually use the line transfer hoist to pick up the equipment and then close the line transfer trap door. Operations personnel survey the item and the hoist. The equipment and/or hoist are decontaminated if necessary. The equipment door is opened. The hoist moves the item into the maintenance area and the equipment door is closed.

4.1.5 System Reliability Features

RESERVED

4.1.6 System Control Features

4.1.6.1 System Monitoring

Mechanical handling monitoring is described in the mechanical handling diagrams and equipment operation manuals. Refer to 24590-LAW-M1-LFH-00001, *MSD for LAW Vitrification System LFH MSD Detailing LAW Finishing Handling* for interlocks, permissives, instruments, and controls.

Table 4-2 shows the process instrumentation indicators for monitoring operations.

Table 4-2 - System Monitoring Instrumentation

Equipment No.	Instrument No.	Properties	Indication	Remarks
LFH-LID-00025 Lid Press (North)	LFH-WE-6170		Insertion force	
LFH-LID-00029 Lid Recovery Tool (North)	LFH-WE-6216		Insertion force	
LFH-LID-00026 Lid Press (South)	LFH-WE-6020		Insertion force	
LFH-LID-00030 Lid Recovery Tool (South)	LFH-WE-6066		Insertion force	
LFH-TOOL-00025 Upper Decontamination Power Manipulator End Effector (North)	LFH-TI-5501		Nozzle 1 (upper) temperature	
	LFH-TI-5502		Nozzle 2 (lower) temperature	
	LFH-TI-5510		Dew point temperature	
LFH-TOOL-00006 Lower Decontamination Power Manipulator End Effector (North)	LFH-TI-5503		Nozzle 1 (upper) temperature	
	LFH-TI-5504		Nozzle 2 (lower) temperature	
	LFH-TI-5511		Dew point temperature	
LFH-TOOL-00026 Upper Decontamination Power Manipulator End Effector (South)	LFH-TI-5269		Nozzle 1 (upper) temperature	
	LFH-TI-5260		Nozzle 2 (lower) temperature	
	LFH-TI-5267		Dew point temperature	
LFH-TOOL-00020 Lower Decontamination Power Manipulator End Effector (South)	LFH-TI-5251		Nozzle 1 (upper) temperature	
	LFH-TI-5261		Nozzle 2 (lower) temperature	
	LFH-TI-5268		Dew point temperature	

4.1.6.2 Control Capability and Locations

4.1.6.2.1 Remote Continuous Controls

There are no remote continuous controls in the LFH system.

4.1.6.2.2 Remote Discrete Controls

Remote discrete controls are identified in 24590-LAW-M1-LFH-00001, *MSD for LAW Vitrification System LFH MSD Detailing LAW Finishing Handling*. Also refer to 24590-LAW-M7-LFH-00001001 to 00001013, *LAW Vitrification System LFH Mechanical Handling Diagrams*.

4.1.6.3 Automatic and Manual Actions

For mechanical handling equipment instrumentation and control, refer to 24590-LAW-M1-LFH-00001, *MSD for LAW Vitrification System LFH MSD Detailing LAW Finishing Handling*. Also refer to 24590-LAW-M7-LFH-00001001 to 00001013, *LAW Vitrification System LFH Mechanical Handling Diagrams*.

4.1.6.4 Setpoints and Ranges

Setpoints and ranges for the LFH system are identified in 24590-LAW-JDX-LFH-00001, *Configuration Data Index for LAW Facility LFH System*.

4.1.6.5 Interlocks, Bypasses and Permissives

Interlocks for the LFH system are documented in 24590-LAW-M1-LFH-00001, *MSD for System LFH LAW Finishing Handling*. The MSD identifies the interlock requirements, applicable component tag numbers and applicable instrument numbers. There are no safety significant interlocks.

The bogies have interlocks to prevent collision with doors. The lidding bogie is interlocked to prevent bogie travel if the bogie elevating table is not in the transport (low) position. Bogies have ultimate travel interlocks.

The jib cranes are interlocked to prevent simultaneous jib, trolley or hoist movement. The hoists are interlocked to prevent simultaneous trolley and hoist movement. Crane trolleys and hoist trolleys have ultimate travel interlocks. Hoist raise/lower is interlocked to prevent collision with trap doors. Hoists have over extension and over raise interlocks.

Posting port doors are interlocked to prevent both doors open at the same time. The posting port tray is interlocked to prevent collision with posting port doors. Where appropriate for Heating, Ventilating, and Air Conditioning (HVAC) air flow or contamination control, trap doors and containment doors are interlocked to prevent both doors open at the same time. The trap door in the monitoring/export area is interlocked not to open if the container radiation is high.

See the MSD for detailed list of interlocks.

4.1.6.6 Package Mechanical Handling Equipment Local Control Only

Local controls associated with LFH system packaged equipment are identified in Table 4-3.

Table 4-3 - Packaged Equipment Local Controls

Equipment No.	Instrument No.	Properties	Function	Remarks
Shard Tray 24590-LAW-JA-LFH-SMPLR-00005/00003	Refer to vendor operating manual 24590-CM-POA-M000-00006-02-00003	N/A	Refer to vendor operating manual 24590-CM-POA-M000-00006-02-00003	None
Shard Pickup Assembly 24590-LAW-JA-LFH-SMPLR-00001	Refer to vendor operating manual 24590-CM-POA-M000-00006-02-00003	N/A	Refer to vendor operating manual 24590-CM-POA-M000-00006-02-00003	None
MSM Vacuum Tool 24590-LAW-FH-LFH-TOOL-00007/00008	Refer to vendor operating manual 24590-CM-POA-M000-00006-02-00003	N/A	Refer to vendor operating manual 24590-CM-POA-M000-00006-02-00003	None
Lid Press 24590-LAW-HC-LFH-LID-00025	Refer to vendor operating manual 24590–CM-POA-HCTH-00001-03-00002	N/A	Refer to vendor operating manual 24590–CM-POA-HCTH-00001-03-00002	None
Lid Magazine 24590-LAW-HC-LFH-LID-00023/24/35/36	Refer to vendor operating manual 24590–CM-POA-HCTH-00001-03-00002	N/A	Refer to vendor operating manual 24590–CM-POA-HCTH-00001-03-00002	None
Lid Recovery Tool 24590-LAW-HC-LFH-LID-00029/00030	Refer to vendor operating manual 24590–CM-POA-HCTH-00001-03-00002	N/A	Refer to vendor operating manual 24590–CM-POA-HCTH-00001-03-00002	None
Seal Prep Tool 24590-LAW-HC-LFH-LID-00039/00040	Refer to vendor operating manual 24590–CM-POA-HCTH-00001-03-00002	N/A	Refer to vendor operating manual 24590–CM-POA-HCTH-00001-03-00002	None
Inert Fill Hopper 24590-LAW-MH-LFH-MHAN-00002/00004	Refer to vendor operating manual 24590-CM-POA-HDHH-00001-03-00004	N/A	Refer to vendor operating manual 24590-CM-POA-HDHH-00001-03-00004	None
Lidding Bogie 24590-LAW-MQ-LFH-TRLY-00007/00006	Refer to vendor operating manual 24590–CM-POA-MQTS-00001-02-00003	N/A	Refer to vendor operating manual 24590–CM-POA-MQTS-00001-02-00003	None
Decontamination Bogie 24590-LAW-MQ-LFH-TRLY-00005/00008	Refer to vendor operating manual 24590–CM-POA-MQTS-00001-02-00003	N/A	Refer to vendor operating manual 24590–CM-POA-MQTS-00001-02-00003	None
Swabbing Bogie 24590-LAW-MQ-LFH-TRLY-00001/00015	Refer to vendor operating manual 24590–CM-POA-MQTS-00001-02-00003	N/A	Refer to vendor operating manual 24590–CM-POA-MQTS-00001-02-00003	None
Bogie Recovery System 24590-LAW-MH-LFH-RCVY-00004/00003	Refer to vendor operating manual 24590–CM-POA-MQTS-00001-02-00003	N/A	Refer to vendor operating manual 24590–CM-POA-MQTS-00001-02-00003	None
Upper Decontamination Power Manipulator 24590-LAW-MJ-LFH-MANIP-00001/00008	Refer to vendor operating manual 24590–CM-POA-HDYR-00002-14-00007	N/A	Refer to vendor operating manual 24590–CM-POA-HDYR-00002-14-00007	None
Lower Decontamination Power Manipulator 24590-LAW-MJ-LFH-MANIP-00011/00012	Refer to vendor operating manual 24590–CM-POA-HDYR-00002-14-00007	N/A	Refer to vendor operating manual 24590–CM-POA-HDYR-00002-14-00007	None
Decontamination Turntable 24590-LAW-MJ-LFH-TTBL-00001/00002	Refer to vendor operating manual 24590–CM-POA-HDYR-00002-14-00007	N/A	Refer to vendor operating manual 24590–CM-POA-HDYR-00002-14-00007	None
Swabbing Power Manipulator 24590-LAW-MJ-LFH-MANIP-00002/00009	Refer to vendor operating manual 24590–CM-POA-HDYR-00002-14-00005	N/A	Refer to vendor operating manual 24590–CM-POA-HDYR-00002-14-00005	None
Swabbing Turntable 24590-LAW-MJ-LFH-TTBL-00005/00006	Refer to vendor operating manual 24590–CM-POA-HDYR-00002-14-00005	N/A	Refer to vendor operating manual 24590–CM-POA-HDYR-00002-14-00005	None

Equipment No.	Instrument No.	Properties	Function	Remarks
Lidding Jib Crane 24590-LAW-MJ-LFH-CRN-00006/00003	Refer to vendor operating manual 24590-CM-POA-MJKJ-00003-17-00006/00003	N/A	Refer to vendor operating manual 24590-CM-POA-MJKJ-00003-17-00006/00003	None
Sealing Jib Crane 24590-LAW-MJ-LFH-CRN-00007/00004	Refer to vendor operating manual 24590-CM-POA-MJKJ-00003-17-00007/00005	N/A	Refer to vendor operating manual 24590-CM-POA-MJKJ-00003-17-00007/00005	None
Line Transfer Monorail Hoist 24590-LAW-MJ-LFH-HST-00001	Refer to vendor operating manual 24590-CM-POA-MJKH-00001-14-00015	N/A	Refer to vendor operating manual 24590-CM-POA-MJKH-00001-14-00015	None
Lidding Monorail Hoist 24590-LAW-MJ-LFH-HST-00008/00009	Refer to vendor operating manual 24590-CM-POA-MJKH-00001-14-00008/00012	N/A	Refer to vendor operating manual 24590-CM-POA-MJKH-00001-14-00008/00012	None
Decontamination Dual Rail Hoist 24590-LAW-MJ-LFH-HST-00010/00005	Refer to vendor operating manual 24590-CM-POA-MJKH-00001-14-00005/00014	N/A	Refer to vendor operating manual 24590-CM-POA-MJKH-00001-14-00005/00014	None
Swabbing Dual Rail Hoist 24590-LAW-MJ-LFH-HST-00011/00006	Refer to vendor operating manual 24590-CM-POA-MJKH-00001-14-00007/00006	N/A	Refer to vendor operating manual 24590-CM-POA-MJKH-00001-14-00007/00006	None
Shard Sampling Posting Port 24590-LAW-JA-LFH-SMPLR-00009/00010	Refer to vendor operating manual 24590-CM-POA-M000-00005-07-00002	N/A	Refer to vendor operating manual 24590-CM-POA-M000-00005-07-00002	None
Swab Posting Port 24590-LAW-JA-LFH-SMPLR-00006/00007	Refer to vendor operating manual 24590-CM-POA-M000-00005-07-00002	N/A	Refer to vendor operating manual 24590-CM-POA-M000-00005-07-00002	None
Lidding Trap Door 24590-LAW-AD-LFH-DOOR-00009/00010	Refer to vendor operating manual 24590-CM-POA-ADDH-00003-03-00015	N/A	Refer to vendor operating manual 24590-CM-POA-ADDH-00003-03-00015	None
Decontamination/Storage Trap Door 24590-LAW-AD-LFH-DOOR-00002 /18	Refer to vendor operating manual 24590-CM-POA-ADDH-00003-03-00015	N/A	Refer to vendor operating manual 24590-CM-POA-ADDH-00003-03-00015	None
Line Transfer Trap Door 24590-LAW-AD-LFH-DOOR-00014 /00011	Refer to vendor operating manual 24590-CM-POA-ADDH-00003-03-00015	N/A	Refer to vendor operating manual 24590-CM-POA-ADDH-00003-03-00015	None
Lidding/Decontamination Shielded Door 24590-LAW-AD-LFH-DOOR-00015/00019	Refer to vendor operating manual 24590-CM-POA-ADDH-00005-02-19	N/A	Refer to vendor operating manual 24590-CM-POA-ADDH-00005-02-19	None
Decontamination/Swabbing Containment Door 24590-LAW-AD-LFH-DOOR-00022/00020	Refer to vendor operating manual 24590-CM-POA-ADDH-00005-02-19	N/A	Refer to vendor operating manual 24590-CM-POA-ADDH-00005-02-19	None
Swabbing/Export Containment Door 24590-LAW-AD-LFH-DOOR-00016/00012	Refer to vendor operating manual 24590-CM-POA-ADDH-00005-02-19	N/A	Refer to vendor operating manual 24590-CM-POA-ADDH-00005-02-19	None
Line Transfer Equipment Door 24590-LAW-AD-LFH-DOOR-00021	Refer to vendor operating manual 24590-CM-POA-ADDH-00005-02-24	N/A	Refer to vendor operating manual 24590-CM-POA-ADDH-00005-02-24	None

4.2 Operations

RESERVED

4.2.1 Initial Configuration (Pre-startup)

RESERVED

4.2.2 System Startup

RESERVED

4.2.3 Normal Operations

RESERVED

4.2.4 Off-Normal Operations

RESERVED

4.2.5 System Shutdown

RESERVED

4.2.6 Safety Management Programs and Administrative Controls

RESERVED

4.3 Testing and Maintenance

RESERVED

4.3.1 Temporary Configurations

RESERVED

4.3.2 TSR-Required Surveillances

RESERVED

4.3.3 Non-TSR Inspections and Testing

RESERVED

4.3.4 Maintenance

RESERVED

4.4 Supplemental Information

RESERVED

5 References and Design Documents List

5.1 Source / Basis References

Document Number	Rev	Title	Text Reference
24590-WTP-DB-ENG-01-001	002	*Basis of Design*	BOD
24590-WTP-RPT-OP-01-001	005	*Operations Requirements Document*	ORD
DE-AC27-01RV14136	M339	*WTP Contract*	DOE/BNI Contract
24590-WTP-PL-RT-03-001	5	ILAW Product Compliance Plan	ILAW Compliance Plan
24590-WTP-ICD-MG-01-015	003	ICD 15 – Interface Control Document for Immobilized Low Activity Waste	ICD
24590-WTP-SRD-ESH-01-001-02	07F	*Safety Requirements Document, Volume II*	SRD
24590-LAW-FHA-RAFP-FP-0001	001	*Fire Hazards Analysis (FHA) for the Low-Activity Waste Facility (LAW)*	FHA – LAW

5.2 Other References

Document Number	Rev	Title
24590-WTP-3DP-G04B-00093	005	*System and Facility Design Descriptions*
24590-WTP-3DP-G04B-00004	003	*Technical Requirements Management*
24590-WTP-3DP-G04T-00901	025	*Design Change Control*
DOE-STD-3024-2011	N/A	*Content of System Design Descriptions*
24590-WTP-3DP-G04B-00046	031	*Engineering Drawings*
24590-WTP-GPG-ENG-0161	000	*Technical Requirements Management*
24590-WTP-GPG-ENG-033	002	*Evaluation for Seismic Interaction Effects*
24590-LAW-3ZD-LRH-00001	0	*LAW Container Receipt Handling (LRH) System Design Description*
WTP-PL-RACT-RT-0001	000	*WTP Remotability Verification Plan*
24590-WTP-ES-J-11-001	000	*Guidance For The Application Of Emergency Stops On Equipment At The WTP*
24590-LAW-JDX-LFH-00001	001	*Configuration Data Index for LAW Facility LFH System*

5.3 System Design Documents

Mechanical Handling Diagrams	
24590-LAW-M7-LFH-00001001	LAW Vitrification System LFH Mechanical Handling Diagram Container Finishing Handling System
24590-LAW-M7-LFH-00001002	LAW Vitrification System LFH Mechanical Handling Diagram South Lidding Station
24590-LAW-M7-LFH-00001003	LAW Vitrification System LFH Mechanical Handling Diagram Container Handling South Sampling and Inert Fill

24590-LAW-M7-LFH-00001004	LAW Vitrification System LFH Mechanical Handling Diagram South Lidding Station
24590-LAW-M7-LFH-00001005	LAW Vitrification System LFH Mechanical Handling Diagram South Decontamination Station
24590-LAW-M7-LFH-00001006	LAW Vitrification System LFH Mechanical Handling Diagram South Swabbing Station
24590-LAW-M7-LFH-00001007	LAW Vitrification System LFH Mechanical Handling Diagram South Export/Monitor Station
24590-LAW-M7-LFH-00001008	LAW Vitrification System LFH Mechanical Handling Diagram North Sampling and Inert Fill
24590-LAW-M7-LFH-00001009	LAW Vitrification System LFH Mechanical Handling Diagram North Lidding Station
24590-LAW-M7-LFH-00001010	LAW Vitrification System LFH Mechanical Handling Diagram North Decontamination Station
24590-LAW-M7-LFH-00001011	LAW Vitrification System LFH Mechanical Handling Diagram North Swabbing Station
24590-LAW-M7-LFH-00001012	LAW Vitrification System LFH Mechanical Handling Diagram North Export/Monitor Station
24590-LAW-M7-LFH-00001013	LAW Vitrification System LFH Mechanical Handling Diagram Line Transfer Station
Mechanical Sequence Diagram	
24590-LAW-M1-LFH-00001	Mechanical Sequence Diagram (MSD) for LAW Vitrification System LFH MSD Detailing Product LAW Finishing Handling
Equipment List	
24590-LAW-M0X-M40T-00005	Mechanical Handling Equipment List for LAW System LFH
General Arrangement Drawings	
24590-LAW-P1-P01T-00002	LAW Vitrification Building General Arrangement Plan at El. 3'-0"
24590-LAW-P1-P01T-00003	LAW Vitrification Building General Arrangement Plan at El. 22'-0"
24590-LAW-P1-P01T-00004	LAW Vitrification Building General Arrangement Plan at El. 28'-0"

Equipment Location Drawings	
24590-LAW-P1-P23T-00020	LAW Vitrification Building Equipment Location Plan at EL 3'-0" Area 13
24590-LAW-P1-P23T-00021	LAW Vitrification Building Equipment Location Plan at EL 3'-0" Area 14
24590-LAW-P1-P23T-00025	LAW Vitrification Building Equipment Location Plan at EL 3'-0" Area 18
24590-LAW-P1-P23T-00026	LAW Vitrification Building Equipment Location Plan at EL 3'-0" Area 19
24590-LAW-P1-P23T-00035	LAW Vitrification Building Equipment Location Plan at EL 22'-0" Area 9
24590-LAW-P1-P23T-00036	LAW Vitrification Building Equipment Location Plan at EL 22'-0" Area 10
24590-LAW-P1-P23T-00037	LAW Vitrification Building Equipment Location Plan at EL 22'-0" Area 11
24590-LAW-P1-P23T-00046	LAW Vitrification Building Equipment Location Plan at EL -8'-0" Area 9
Engineering Specifications	
24590-LAW-3PS-M000-T0006	Engineering Specification for Shard Sampling System – Low Activity Waste Vitrification Facility
24590-WTP-3PS-MJKH-T0002	Engineering Specification for Process Monorail Hoists (Commercial Quality)
24590-WTP-3PS-MJKJ-T0003	Engineering Specification for Remote Operated Under Running Crane and Jib Cranes (Commercial Quality)
24590-LAW-3PS-HCTH-T0001	Engineering Specification for Product Container Lidding System
24590-LAW-3PS-HDYR-T0001	Engineering Specification for Power Manipulators and Turntables – Low Activity Waste Vitrification Facility
24590-WTP-3PS-M000-T0012	Engineering Specification for Master Slave Manipulators for PTF, HLW, LAW and LAB
24590-LAW-3PS-ADDC-T0001	Engineering Specification for Low Activity Waste Facility System Transfer Trap Doors
24590-LAW-3PS-ADDM-T0003	Engineering Specification for LAW Bogie and Monorail Shield Doors
24590-LAW-3PS-HCHH-T0002	Engineering Specification for Special Inert Fill Hoppers – Low Activity Waste Vitrification Facility
24590-LAW-3PS-MQLL-T0001	Engineering Specification for LAW Container Stands / Bogie Shutters
24590-LAW-3PS-MX00-T0002	Engineering Specification for LAW Shielded Personnel Access Doors – Common Items
24590-WTP-3PS-MQR0-T0003	Engineering Specification for LAW and PTF Bogies
24590-WTP-3PS-MQL0-T0003	Engineering Specification for Special Grapples and Lifting Devices
24590-WTP-3PS-M000-T0006	Engineering Specification for WTP Facility Posting Port
24590-WTP-3PS-M000-T0007	Engineering Specification for WTP Facility Posting Port Glovebox
24590-WTP-3PS-MX00-T0002	Engineering Specification for Shielded Glass Windows
CCTV Drawings	

24590-LAW-J0-PTJ-00002	LAW Vitrification System PTJ, Supplemental Instr Diagram, CCTV Equipment Plan @ EL. 3'-0"
24590-LAW-J0-PTJ-00003	LAW Vitrification System PTJ, Supplemental Instr Diagram, CCTV Equipment Plan @ EL. 28'-0"
Vendor Drawings	
24590-CM-POA-M000-00006-06-00021	Shard Table 24590-LAW-JA-LFH-SMPLR-00002/00004
24590-CM-POA-M000-00006-06-00019	Shard Tray 24590-LAW-JA-LFH-SMPLR-00005/00003
24590-CM-POA-M000-00006-06-00061	Shard Pickup Assembly 24590-LAW-JA-LFH-SMPLR-00001
24590-CM-POA-M000-00006-06-00023	MSM Tool Tray 24590 LAW-MJ-LFH-MANIP-00003/00005
24590-CM-POA-M000-00006-06-00029	MSM Vacuum Tool 24590-LAW-FH-LFH-TOOL-00007/00008
24590-CM-POA-M000-00006-06-00027	Sample Vial Holder 24590-LAW-HC-LID-00015/16
24590-CM-POA-HCHH-00001-01-00064	Inert Fill Hopper 24590-LAW-MH-LFH-MHAN-00002/00004
24590-CM-POA-HCTH-00001-09-00014	Lid Press 24590-LAW-HC-LFH-LID-00025
24590-CM-POA-HCTH-00001-09-00061	Lid Magazine 24590-LAW-HC-LFH-LID-00023/24/35/36
24590-CM-POA-HCTH-00001-09-00016	Lid Recovery Tool 24590-LAW-HC-LFH-LID-00029/30
24590-CM-POA-HCTH-00001-09-00188	Seal Prep Tool 24590-LAW-HC-LFH-LID-00039/40
24590-CM-POA-HCTH-00001-09-00069	Lid Press Parking Stand 24590-LAW-HC-LFH-LID-00027/28
24590-CM-POA-HCTH-00001-09-00084	Lid Recovery Tool Parking Stand 24590-LAW-HC-LFH-LID-00031/32
24590-CM-POA-HCTH-00001-09-00262	Lid Recovery Cable Management 24590-LAW-HC-LFH-MHAN-00018/00020
24590-CM-POA-HCTH-00001-09-00261	Lid Press Cable Management 24590-LAW-HC-LFH-MHAN-00017/19
24590-CM-POA-HCTH-00001-09-00191	Lid Disposal Bin 24590-LAW-HC-LFH-LID-00033/34
24590-CM-POA-HCTH-00001-09-000194	Lidding Tool Tray 24590-LAW-HC-LFH-LID-00037/38
24590-CM-POA-HDYR-00002-01-00079	Lower Decontamination Power Manipulator 24590-LAW-MJ-LFH-MANIP-00011/12
24590-CM-POA-HDYR-00002-01-00076	Upper Decontamination Power Manipulator 24590-LAW-MJ-LFH-MANIP-00001
24590-CM-POA-HDYR-00002-01-00152	Upper Decontamination End Effector 24590-LAW-FH-LFH-TOOL-00025/26
24590-CM-POA-HDYR-00002-01-00152	Lower Decontamination End Effector 24590-LAW-FH-LFH-TOOL-00006/20

24590-CM-POA-HDYR-00002-01-00374	Upper Decontamination Manipulator Tool Tray 24590-LAW-MJ-LFH-MANIP-00015/17
24590-CM-POA-HDYR-00002-01-00372	Lower Decontamination Manipulator Tool Tray 24590-LAW-MJ-LFH-MANIP-00016/18
24590-CM-POA-HDYR-00002-01-00074	Decontamination Turntable 24590-LAW-MJ-LFH-TTBL-00001/2
24590-CM-POA-HDYR-00002-01-00329	Swabbing Power Manipulator 24590-LAW-MJ-LFH-MANIP-00002/9
24590-CM-POA-HDYR-00002-01-00130	Swabbing End Effector 24590-LAW-FH-LFH-TOOL-00004
24590-CM-POA-HDYR-00002-01-00033	Swabbing Turntable 24590-LAW-MJ-LFH-TTBL-00005/6
24590-CM-POA-MJKJ-00003-05-00001	Lidding Jib Crane 24590-LAW-MJ-LFH-CRN-00006/3
24590-CM-POA-MJKJ-00003-05-00007	Sealing Jib Crane 24590-LAW-MJ-LFH-CRN-00007/4
24590-CM-POA-MJKH-00001-05-00005	Lidding Monorail Hoist 24590-LAW-MJ-LFH-HST-00008/9
24590-CM-POA-MJKH-00001-05-00007	Decontamination Dual Rail Hoist 24590-LAW-MJ-LFH-HST-00010/00005
24590-CM-POA-MJKH-00001-05-00008	Swabbing Dual Rail Hoist 24590-LAW-MJ-LFH-HST-00011/00006
24590-CM-POA-MJKH-00001-05-00001	Line Transfer Monorail Hoist 24590-LAW-MJ-LFH-HST-00001
24590-QL-POA-FH00-00001-03-00009	Grapple 24590-LAW-FH-LFH-TOOL-00009
24590-QL-POA-FH00-00001-03-00002	Grapple Stand 24590-LAW-MH-LFH-MHAN-00008
24590-CM-POA-MQTS-00001-01-00058	Lidding Bogie 24590-LAW-MQ-LFH-TRLY-00007/6
24590-CM-POA-MQTS-00001-01-00062	Decontamination Bogie 24590-LAW-MQ-LFH-TRLY-00005/8
24590-CM-POA-MQTS-00001-01-00064	Swabbing Bogie 24590-LAW-MQ-LFH-TRLY-00001/15
24590-CM-POA-MQTS-00001-01-00104	Bogie Recovery System 24590-LAW-MH-LFH-RCVY-00004/3
24590-CM-POA-ADDH-00003-06-00275	Lidding Trap Door 24590-LAW-AD-LFH-DOOR-00009/10
24590-CM-POA-ADDH-00003-06-00321	Decontamination/Storage Trap Door 24590-LAW-AD-LFH-DOOR-00002 /18
24590-CM-POA-ADDH-00003-06-00093	Line Transfer Trap Door 24590-LAW-AD-LFH-DOOR-00014 /11
24590-CM-POA-ADDH-00005-06-184	Lidding/Decontamination Shielded Door 24590-LAW-AD-LFH-DOOR-00015/19
24590-CM-POA-ADDH-00005-06-183	Decontamination/Swabbing Containment Door 24590-LAW-AD-LFH-DOOR-00022/20
24590-CM-POA-ADDH-00005-06-180	Swabbing/Export Containment Door 24590-LAW-AD-LFH-DOOR-00016/12
24590-CM-POA-ADDH-00005-06-189	Line Transfer Equipment Door 24590-LAW-AD-LFH-DOOR-00021

24590-CM-POA-ADDB-00001-06-09 and 01	Lidding Shielded Personnel Access Door 24590-LAW-AD-LFH-DOOR-00004/6
24590-CM-POA-ADDB-00001-06-01 and 09	Swabbing Shielded Personnel Access Door 24590-LAW-AD-LFH-DOOR-00005/7
24590-QL-POA-SY00-00003-06-00003	Bogie Door Shutters 24590-LAW-SY-LFH-SPAN-00001/2
24590-QL-POA-SY00-00003-06-00002	Export Hatch Shutters 24590-LAW-SY-LFH-SPAN-00003/4
24590-CM-POA-M000-00005-07-00002	Shard Sampling Posting Port 24590-LAW-JA-LFH-SMPLR-00009/10
24590-CM-POA-M000-00005-07-00002	Swab Posting Port 24590-LAW-JA-LFH-SMPLR-00006/7
24590-CM-POA-M000-00005-07-00081	Shard Sampling Glovebox 24590-LAW-M0-LFH-GB-00001
24590-CM-POA-M000-00005-07-00083	Swab Monitoring Glovebox 24590-LAW-M0-LFH-GB-00003/4
24590-QL-POA-MJW0-00003-03-00011	Master Slave Manipulator 24590-LAW-MJ-LFH-MANIP-00021
24590-QL-POA-ADDP-00001-01-01	Shield Window 24590-WTP-AD-20-SWIN-00008 to 00015
Operations and Maintenance Manuals	
24590-CM-POA-M000-00006-02-00003	Shard Tray 24590-LAW-JA-LFH-SMPLR-00005/00003 Shard Pickup Assembly 24590-LAW-JA-LFH-SMPLR-00001 MSM Vacuum Tool 24590-LAW-FH-LFH-TOOL-00007/00008
24590–CM-POA-HCTH-00001-03-00002	Lid Press 24590-LAW-HC-LFH-LID-00025 Lid Magazine 24590-LAW-HC-LFH-LID-00023/24/35/36 Lid Recovery Tool 24590-LAW-HC-LFH-LID-00029/30 Seal Prep Tool 24590-LAW-HC-LFH-LID-00039/40
24590-CM-POA-HCHH-00001-03-00004	Inert Fill Hopper 24590-LAW-MH-LFH-MHAN-00002/00004
24590–CM-POA-MQTS-00001-02-00003	Lidding Bogie 24590-LAW-MQ-LFH-TRLY-00007/6 Decontamination Bogie 24590-LAW-MQ-LFH-TRLY-00005/8 Swabbing Bogie 24590-LAW-MQ-LFH-TRLY-00001/15 Bogie Recovery System 24590-LAW-MH-LFH-RCVY-00004/3
24590–CM-POA-HDYR-00002-14-00004 and 00005	Swabbing Power Manipulator 24590-LAW-MJ-LFH-MANIP-00002/9 Swabbing Turntable 24590-LAW-MJ-LFH-TTBL-00005/6
24590-CM-POA-HDYR-00002-14- 00007 (ops), -00008 (maint)	Upper and Lower Decontamination Power Manipulators 24590-LAW-MJ-LFH-MANIP-00011/12 Decontamination Turntable 24590-LAW-MJ-LFH-TTBL-00001/2

24590-CM-POA-ADDH-00005-02-19 (ops), -20 (maint)	Lidding/Decontamination Shielded Door 24590-LAW-AD-LFH-DOOR-00015/19 Decontamination/Swabbing Containment Door 24590-LAW-AD-LFH-DOOR-00022/20 Swabbing/Export Containment Door 24590-LAW-AD-LFH-DOOR-00016/12
24590-CM-POA-ADDH-00003-03-00015 (ops), -00017 (maint)	Lidding Trap Door 24590-LAW-AD-LFH-DOOR-00009/10 Decontamination/Storage Trap Door 24590-LAW-AD-LFH-DOOR-00002 /18 Line Transfer Trap Door 24590-LAW-AD-LFH-DOOR-00014 /11
24590-CM-POA-ADDH-00005-02-24 (ops), -23 (maint)	Line Transfer Equipment Door 24590-LAW-AD-LFH-DOOR-00021
24590-CM-POA-MJKH-00001-14-00015	Line Transfer Monorail Hoist 24590-LAW-MJ-LFH-HST-00001
24590-CM-POA-MJKH-00001-14-00008	Lidding Monorail Hoist 24590-LAW-MJ-LFH-HST-00008/9
24590-CM-POA-MJKH-00001-14-00005	Decontamination Dual Rail Hoist 24590-LAW-MJ-LFH-HST-00010/00005
24590-CM-POA-MJKH-00001-14-00007	Swabbing Dual Rail Hoist 24590-LAW-MJ-LFH-HST-00011/00006
24590-QL-POA-FH00-00001-TBD	Grapple
24590-CM-POA-MJKJ-00003-17-00006	Lidding Jib Crane 24590-LAW-MJ-LFH-CRN-00006/3
24590-CM-POA-MJKJ-00003-17-00007	Sealing Jib Crane 24590-LAW-MJ-LFH-CRN-00007/4
24590-CM-POA-M000-00005-04-00002 (ops), -00004 (maint)	Shard Sampling Posting Port 24590-LAW-JA-LFH-SMPLR-00009/10 Swab Posting Port 24590-LAW-JA-LFH-SMPLR-00006/7

Appendix A Test Objectives, Conditions, and Acceptance Criteria

NOTE: Demonstrations and Tests identified in this appendix are preliminary, pending completion of design activities. They are established to document the flowdown of verification needs established in Section 3 but are not sufficiently detailed for development of specific system and equipment test plans. They may be used for general planning only. This note is to be removed when design is sufficiently progressed to provide the details needed to establish the basis for testing and acceptance criteria. **[HOLD]**

Requirement (para #)	Test (T) or Demo (D)	SU or COM	Plan (including SSCs)	Acceptance Criteria (TAC or GTC)**	Notes/Comments	Test Conditions
3.4.1.5	D	SU/COM	Demonstrate the ability to transfer and transport the container. Trap Door CTNs Lidding Trap Door – LFH-DOOR-00009/-00010 Line Transfer Trap Door – LFH-DOOR-00011/-00014 Decontamination/Storage Trap Door – LFH-DOOR-00002/-00018 Shield/Containment Door CTNs Lidding/Decontamination Shield Door – LFH-DOOR-00015/-00019 Decontamination/Swabbing Containment Door – LFH-DOOR-00020/-00022 Swab/Export Containment Door – LFH-DOOR-00012/-00016 Bogie CTNs Lidding Bogie – LFH-TRLY-00007/-00006 Swabbing Bogie – LFH-TRLY-00001/-00015 Decontamination Bogie – LFH-TRLY-00005/-00008 Bogie-Mounted Swabbing Turntable – LFH-TTBL-00006/-00005 Crane/Hoist CTNs Lidding Monorail Hoist – LFH-HST-00008/-00009 Decontamination Dual-Rail Hoist – LFH-HST-00010/-00005 Swabbing Dual-Rail Hoist – LFH-HST-00011/-00006 Line Transfer Monorail Hoist – LFH-HST-00001	**(GTC)** The LFH mechanical handling equipment performs the container transfers and transports without failure.		A test container weighted to be equal to a filled ILAW container will be utilized during demonstration of container transfer capabilities. Pre-commissioning MHJ operating
3.4.1.7	D	SU/COM	Demonstrate the ability to transfer a container without cross contamination.	**(GTC)** A container is successfully transferred through the finishing line without cross contamination.		Pre-commissioning MHJ operating
3.4.4.3	D	SU/COM	Demonstrate cameras and/or shield windows provide adequate viewing to perform required remote LFH mechanical handling operations.	**(GTC)** Cameras and/or shield windows provide adequate viewing for LFH operations.	Adequate viewing capabilities may be demonstrated as part of the verification demonstration for remote operation of LFH equipment.	Pre-commissioning PCJ operating
3.4.4.4	D	SU/COM	Demonstrate operation of remotely operated LFH equipment from remote operator interfaces using CCTV monitors and/or shield windows.	**(GTC)** LFH equipment is successfully operated remotely using CCTV and/or shield windows.	Physical demonstration	Pre-commissioning
3.4.4.5	D	SU/COM	Demonstrate cameras provide adequate viewing to perform required container internal visual inspection.	**(GTC)**		Pre-commissioning PCJ operating

				Cameras provide adequate viewing for container visual inspections.		
3.6.3.1	T	SU/COM	Measure illumination levels below the LFH cranes and hoists to verify crane/hoist and facility lighting complies with IESNA Standards.	**(GTC)** The illumination levels below the LFH cranes and hoists comply with IESNA standards.		Pre-commissioning MHJ operating
3.6.4.1	D	SU/COM	Demonstrate that crane and hoist brakes engage with a loss of power. Crane/Hoist CTNs Lidding Monorail Hoist – LFH-HST-00008/-00009 Decontamination Dual-Rail Hoist – LFH-HST-00010/-00005 Swabbing Dual-Rail Hoist – LFH-HST-00011/-00006 Line Transfer Monorail Hoist – LFH-HST-00001	**(GTC)** The crane and hoist brakes engage when the power is off.		Pre-commissioning MHJ operating
3.6.4.4	D	SU/COM	Demonstrate crane and hoist recovery capability in accordance with 24590-WTP-PL-RACT-RT-0001, *WTP Remotability Verification Plan.*	**(GTC)** The cranes and hoists are successfully recovered to their respective maintenance areas.		Pre-commissioning MHJ operating
3.7.4.1	D	SU/COM	Demonstrate bogie recovery in accordance with 24590-WTP-PL-RACT-RT-0001, *WTP Remotability Verification Plan* Bogie CTNs: Lidding Bogie – LFH-TRLY-00007/-00006 Swabbing Bogie – LFH-TRLY-00001/-00015 Decontamination Bogie – LFH-TRLY-00005/-00008 Bogie-Mounted Swabbing Turntable – LFH-TTBL-00006/-00005	**(GTC)** The bogie is successfully recovered to the maintenance area.		Pre-commissioning MHJ operating
3.8.1.1	D	SU/COM	Demonstrate that the manipulators can perform the remote handling and maintenance operations listed above.	**(GTC)** The manipulators successfully perform remote installation, operation, maintenance, removal and disposal.	Assistance may be provided by in-cave cranes or other manipulators.	Pre-commissioning MHJ operating
3.8.1.2	D	SU/COM	Demonstrate MSM removal and replacement	**(GTC)** The manipulators can be recovered successfully by the line transfer hoist.	One MSM may be used to perform this demonstration.	Pre-commissioning MHJ operating
3.8.1.3	D	SU/COM	Demonstrate decontamination and swabbing activities	**(GTC)** Decontamination and swabbing activities are successfully performed.	Physical demonstration	Pre-commissioning MHJ operating CDG operating PSA operating A full scale ILAW container is to be used
3.10.1.1	D	SU/COM	Demonstrate LFH equipment control using the MHJ.	**(GTC)** LFH equipment is successfully controlled by the MHJ.		Pre-commissioning MHJ operating
3.10.1.3	D	SU/COM	Demonstrate the operability of local/maintenance mode features and functions during operation from the local control panels or pendants.	**(GTC)** Check operation and various interlocks for doors and cranes		Pre-commissioning MHJ operating
3.10.4.2	D	SU/COM	Demonstrate the capability to stop equipment using the equipment's dedicated emergency stop.	**(GTC)** Emergency stop removes all power to associated LFH equipment, causing all		Pre-commissioning MHJ operating

				equipment to immediately stop.		
3.10.4.3	D	SU/COM	Demonstrate E-stops reporting/indication and reset functions.	**(GTC)** Emergency stop signals are displayed through the MHJ. Parent equipment remains in shutdown until the emergency stop circuit is reset.		Pre-commissioning MHJ operating
3.11.1.1	D	SU/COM	Demonstrate lidding and sealing operations.	**(GTC)** Lidding and sealing operations are performed to ensure the lid and seal are properly engaged.		Pre-commissioning MHJ operating
3.11.1.2	D	SU/COM	Demonstrate container level measurement and inert fill addition operations.	**(GTC)** Glass level height measurement and inert fill addition operations are properly performed and verified.		Pre-commissioning MHJ operating
3.11.2.1	D	SU/COM	Demonstrate decontamination operations.	**(GTC)** Decontamination operations are performed and verified that the container surface is free of contamination.	Can be verified along with demonstration done in requirement 3.8.1.3	Pre-commissioning MHJ operating Use a substitute material on container surface to act as contamination.
3.12.1.1	D	SU/COM	Demonstrate the capability to transfer items through the posting port.	**(GTC)** The posting port demonstrates the capability to import and export swabs to/from the swabbing manipulator.		Pre-commissioning MHJ operating
3.12.1.3	T	SU/COM	Measure the pressure in the gloveboxes to verify that it is negative relative to the room environment.	**(GTC)** The pressure in the gloveboxes is negative relative to the room environment.	May be performed during C5V verification activities	Pre-commissioning
3.12.1.6	D	SU/COM	Demonstrate the ability to access maintainable items in the gloveboxes.	**(GTC)** All maintainable items in the glovebox are accessible.		Pre-commissioning
3.12.1.10	D	SU/COM	Demonstrate the ability to import and use portable instruments within the glovebox.	**(GTC)** Portable instruments are able to be imported and used within the glovebox.		Pre-commissioning

Notes:
* Test acceptance criteria (TAC) are based on requirements from authorization basis documents. General test criteria (GTC) are requirements from other sources.
Any non-safety related anomalies or issues experienced during the execution of a test or demonstration plan to validate a requirement can be put on **[HOLD]** until the issue has been resolved.

Appendix B Descriptions of System Functional Flow and Interactions

Function: A.1	Receive ILAW container
Detailed description: The lidding monorail hoists (LFH-HST-00008/-00009) receive filled ILAW containers from the LPH system through the lidding trap doors (LFH-DOOR-00009/-00010). There is one monorail hoist in each finishing line.	
Initiation: This function initiates when the container is ready to be transferred from the LPH system.	
Termination: This function terminates when the trap door is closed.	
Parallel or sequential functions: None	
Applicable Modes: Normal operations	

Function: A.2	Transport ILAW containers to lidding bogie
Detailed description: The lidding bogies (LFH-TRLY-00007/-00006) accept the filled ILAW containers from the lidding monorail hoists in each finishing line. The bogie transports the container to the shard sampling station for fill level measurement and shard sampling if required. The lidding bogies also transport the ILAW container to the inert fill station if the fill level is below the 90% volume minimum. The lidding bogies have an elevating table and serves as the operations platform at the shard sampling, inert fill, and lidding stations.	
Initiation: This function initiates when the lidding monorail hoist lowers the ILAW container onto the lidding bogie.	
Termination: This function terminates when the hoist releases the ILAW container.	
Parallel or sequential functions: None	
Applicable Modes: Normal operations	

Function: A.3	Sample glass
Detailed description: The shard sampling stations create, retrieve, and export for analysis glass shard samples (if required), and measures the fill level of the container. If a sample is collected, it is exported via a posting port to a glovebox and sent to the ASX system.	
Initiation: This function initiates when the lidding bogie arrives at the shard sampling station.	
Termination: This function terminates when a shard has been collected if needed and the fill level has been measured and meets the contract requirements.	
Parallel or sequential functions: A.4	
Applicable Modes: Normal operations	

Function: A.4	Measure glass fill level
Detailed description: The fill level of the ILAW container is measured at the shard sampling station in each finishing line. The container is returned to the shard sampling station after receiving inert fill to confirm adequate fill level.	
Initiation: This function initiates when the lidding bogie arrives at the shard sampling station.	
Termination: This function terminates when the fill level has been measured and meets the contract requirements.	
Parallel or sequential functions: A.3	
Applicable Modes: Normal operations	

Function: A.5	Lid and seal container
Detailed description: The ILAW container receives the lid with its attached seal at the lidding station. The lid press (LFH-LID-00025/-00026) retrieves a lid from the lid magazine and presses it into place. The lidding station can also clean the container lid seal and latch groove area, or remove a lid that has not properly engaged.	
Initiation: This function initiates when the lidding bogie arrives at the lidding station.	
Termination: This function terminates when the lid and seal are properly engaged on the ILAW container.	
Parallel or sequential functions: None	
Applicable Modes: Normal operations	

Function: A.6	Decontamination dual-rail hoist moves ILAW container to turntable
Detailed description: After the shield door (LFH-DOOR-00015/-00019) between the lidding and decontamination areas is opened, the decontamination dual-rail hoist (LFH-HST-00010/-00005) lifts the ILAW container. The hoist transports the container between the turntable and either the lidding or decontamination bogie. The hoist's rotating hook is used to rotate the container while the bottom is being decontaminated.	
Initiation: This function initiates when the decontamination dual-rail hoist lifts the ILAW container off of the lidding bogie.	
Termination: This function terminates when the bottom of the container surface is decontaminated.	
Parallel or sequential functions: None	
Applicable Modes: Normal operations	

Function: A.7	Decontaminate container surface, turntable, and grapple
Detailed description: The ILAW container is placed on a decontamination turntable (LFH-TTBL-00001/-00002) after the turntable has been decontaminated. The grapple is also decontaminated. . Power manipulators are used to decontaminate the ILAW container. There is an upper and lower manipulator in each decontamination station (LFH-MANIP-00011/-00012/-00001/-00008). The upper manipulators decontaminate the top and sides of the container. The lower manipulators decontaminate the bottom and sides. Decontamination is performed by CO_2 pellets being shot at the container surface from end-effectors on the upper and lower power manipulators. The pellets sublimate when they contact the container. The CO_2 produced by the CDG, the ablated contaminants, and transport air are removed by dedicated exhaust fans and HEPA filters within a duct attached to the shroud that contains the nozzles. The filtered exhaust stream is exhausted by the C5V system.	
Initiation: This function initiates when the decontamination dual-rail hoist lowers the container onto the turntable.	
Termination: This function terminates when the container surface is entirely decontaminated.	
Parallel or sequential functions: C.1, D.1	
Applicable Modes: Normal operations	

Function: A.8	Transport ILAW container to decontamination bogie
Detailed description: After the container is decontaminated, the decontamination dual-rail hoist places it on the decontamination bogie. The decontamination bogie (LFH-TRLY-00005/-00008) is brought in to the decontamination station from the swabbing station's clean environment. This prevents contamination of the now clean ILAW container. The decontamination bogie transports the container to the swabbing station through an opened decontamination/swabbing containment door (LFH-DOOR-00020/-00022).	
Initiation: This function initiates when the decontamination dual-rail hoist lifts the container off of the turntable.	
Termination: This function terminates when the decontamination dual-rail hoist places the container on the decontamination bogie.	
Parallel or sequential functions: None	
Applicable Modes: Normal operations	

Function: A.9	Swabbing dual-rail hoist lifts ILAW container to swabbing station
Detailed description: The swabbing dual-rail hoist (LFH-HST-00011/-00006) lifts the container from the decontamination bogie and places it on the swabbing bogie turntable. The hoist is also used to rotate the raised container while the bottom is swabbed.	
Initiation: This function initiates when the swabbing dual-rail hoist lifts the container off of the decontamination bogie.	
Termination: This function terminates when the swabbing dual-rail hoist places the container on the swabbing bogie turntable.	
Parallel or sequential functions: A.10	
Applicable Modes: Normal operations	

Function: A.10	Swab/smear container bottom
Detailed description: The swabbing dual-rail hoist rotates a raised ILAW container to allow the bottom surface to be swabbed. The bottom is swabbed to ensure that the product container does not exceed contract contamination limits.	
Initiation: This function initiates when the swabbing dual-rail hoist lifts the container off of the decontamination bogie.	
Termination: This function terminates when the container bottom is swabbed.	
Parallel or sequential functions: A.9	
Applicable Modes: Normal operations	

Function: A.11	Transport ILAW container to swabbing bogie
Detailed description: The swabbing dual-rail hoist lowers the container to the swabbing bogie (LFH-TRLY-00001/-00015) which is equipped with a turntable (LFH-TTBL-00006/-00005). The turntable rotates and acts as the operations platform for swabbing. The swabbing bogie is brought into the swabbing area from the export/monitor station through an opened swab/export containment door (LFH-DOOR-00012/-00016).	
Initiation: This function initiates when the bottom of the container is swabbed and the hoist lowers the container.	
Termination: This function terminates when the hoist places the container on the swabbing bogie and releases it.	
Parallel or sequential functions: None	
Applicable Modes: Normal operations	

Function: A.12	Swab/smear container surface
Detailed description: The container side, top, and flange areas is swabbed to ensure that the product container does not exceed contract contamination limits. Swabs are transported to the posting port in the swabbing area which conveys them to a glovebox for analysis.	
Initiation: This function initiates when the operators initiate swabbing operations.	
Termination: This function terminates when the operators have swabbed the pre-determined patches.	
Parallel or sequential functions: None	
Applicable Modes: Normal operations	

Function: A.13	Transport ILAW container to monitoring area and LEH
Detailed description: The swabbing bogie transports the ILAW container to the monitoring/export station through the swab/export containment door. Once the container has been filled to the required level, sealed, decontaminated, and has passed swabbing and monitoring, the export bridge crane exports it to the LEH system through the decontamination/storage trap doors (LFH-DOOR-00002/-00018).	
Initiation: This function initiates when the container has been successfully swabbed.	
Termination: This function terminates when the LEH export bridge crane lifts the container through the trap doors.	
Parallel or sequential functions: None	
Applicable Modes: Normal operations	

Function: A.14	Perform maintenance activities/transfer container
Detailed description: The line transfer monorail (LFH-HST-00001) is used to transport containers between the north and south finishing lines through trap doors (LFH-DOOR-00011/-00014). This allows manned entries to access failed equipment by routing in-process containers around failed in-cell equipment. Equipment, such as power manipulators, is also transferred in and out of the lidding and decontamination areas. The line transfer station is also used for reloading the lid magazines at the lidding station.	
Initiation: This function initiates when a container needs to be transferred to the other finishing line or when maintenance is performed.	
Termination: This function terminates when the container is transferred to the other finishing line or when the maintenance is finished.	
Parallel or sequential functions: None	
Applicable Modes: Maintenance operations	

Function: B.1	Fill ILAW container with inert fill
Detailed description: If the container fill level is below the 90% volume minimum contract requirement, it is sent to the inert fill station. The inert fill is added to a partially glass-filled container to comply with the contract void space requirements. The fill is silica from the GFR system and is delivered pneumatically from a totally enclosed system to ensure no moisture is introduced. This function may not be performed for each container.	
Initiation: This function initiates when the container fill level is below the 90% volume minimum contract.	
Termination: This function terminates when the container receives the necessary amount of inert fill material.	
Parallel or sequential functions: None	
Applicable Modes: Normal operations	

Function: C.1	Receive CO_2 pellets for decontamination
Detailed description: CO_2 pellets come from the CDG system and are used to decontaminate the ILAW containers.	
Initiation: This function initiates when the container is ready for decontamination.	
Termination: This function terminates when decontamination activities are finished.	
Parallel or sequential functions: A.7	
Applicable Modes: Normal operations	

Function: D.1	Receive air for decontamination
Detailed description: Plant service air is used as blast air for the CO_2 pellets to perform decontamination activities.	
Initiation: This function initiates when the container is ready for decontamination.	
Termination: This function terminates when decontamination activities are finished.	
Parallel or sequential functions: A.7	
Applicable Modes: Normal operations	

Function: E.1	Facilitate remote viewing of operations via CCTV
Detailed description: The PTJ system provides remote viewing of LFH operations via CCTV.	
Initiation: This function initiates when there is a container present in the finishing lines and operations personnel are monitoring the operation.	
Termination: This function terminates when a container is not present in the finishing lines.	
Parallel or sequential functions: All	
Applicable Modes: Normal operations, Maintenance	

Function: F.1	Receive Electrical Power
Detailed description: The low voltage electrical (480/208/120 V) system (LVE) provides normal power to LFH components requiring electrical power from the LVE.	
Initiation: This function initiates when the LAW facility is in startup operations.	
Termination: This function terminates when there is a loss of WTP site power.	
Parallel or sequential functions: All	
Applicable Modes: All modes.	

Function: G.1	Support Monitoring and Controlling
Detailed description: The mechanical handling control system (MHJ) provides monitoring and control functions as described below: • Monitor/Control inert fill operations • Monitor/Control lidding operations • Monitor/Control decontamination operations • Monitor/Control swabbing operations • Monitor/Control bogies • Monitor/Control shield doors • Monitor/Control posting ports • Monitor surface dose rate • Monitor/Control cranes and hoists	
Initiation: This function initiates when the LAW facility is in startup operations.	
Termination: This function terminates when the LAW facility is not in normal operations.	
Parallel or sequential functions: All	
Applicable Modes: Normal operations.	

Appendix C Active Safety Instruments and Functions

The listed instruments are designated as having active safety functions, implemented through interface with and programming in the PPJ system. Information in the table below reflects the current design of active safety instruments, including functions, and safety designations per the P&IDs and associated equipment and instrument lists. In some cases the current safety classification of the SSCs in design is known to exceed the design requirements. The information will be updated as needed to reflect changes to the design. The information below is provided in support of Plant Engineering and Operations and does not represent design requirements.

No active safety instrumented functions are identified.

Appendix D System Procedures

Reserved

Appendix E System History

Reserved

Issued by
RPP-WTP PDC

LAW Melter Feed Process (LFP) and Concentrate Receipt Process (LCP) System Design Description

Document title:	LAW Melter Feed Process (LFP) and Concentrate Receipt Process (LCP) System Design Description
Document number:	24590-LAW-3ZD-LFP-00001
Revision number:	0
Type:	☑ System Design Description ☐ Facility Design Description
Originator(s):	Chris Kryworuk
Checked by:	John Winslow
Checker's signature:	Signature — Date: 8/25/2015
Concurrence:	Mark Johnson 8/31/15
Concurrence signature:	Manager of Production Engineering Signature — Date: 8/31/15
Concurrence:	Ian Milgate
Concurrence signature:	Project Technical Director and Design Authority Signature — Date: 8/31/15
Approved by:	Natalie Harkey
Approver's position:	Systems Engineering Manager
Approver's signature:	Signature — Date: 8/31/2015

Validation

Appl.	Requirement Area	Requirement Developer	Signature	Date
☐	Architectural Design			
☐	Civil/Structural Design			
☑	Controls & Instrumentation Design	WAYNE UNDERHILL	[signature]	8/13/15
☐	Electrical Design & AHJ			
☐	Fire Protection Systems Design			
☐	Fire Protection AHJ			
☐	HVAC Design			
☐	Mechanical Handling Design			
☑	Mechanical Systems Design	JULIAN LEAM	[signature]	08.05.15 PL 8/27/15
☑	Plant Design	John Schuette	[signature]	8-10-15
☑	Process Engineering	Eric Slaathaug	[signature]	8/13/15
☐	Interface (External)			
☐	Interface (Internal)			
☑	System Functions and Requirements	P. Townsend	[signature]	8-24-15
☑	Equipment Environmental Qualification	G. RAJAGOPAL	G. Rajagopal	7/27/15
☑	Materials Engineering / Technology	Grant D Marr	[signature]	8/6/15
☐	Plant Software Design			
☑	Environmental Permitting (ESH)	C. Krupnik for Dale Gerardy	Per e-mail [signature]	7/27/15
☐	Fire Safety (ESH)			
☑	Nuclear Safety Engineering	Robert Birchenough	Robert Birch	8/7/2015
☐	Criticality Safety			
☑	Radiological Engineering	RUSSELL LANDER	[signature]	8/12/15
☐	Industrial Safety/Hygiene (ESH)			
☑	Mission (WTP Contract functional/performance rqmts)	BK Gifford	B.K. Gifford	8.4.15
☑	Operations Requirements Document	RANDA DUNN	[signature]	8/7/15
☑	Quality Assurance	CC Albin	CC Albin	7/28/15
☐	Safeguards & Security			
☐	Startup			
☐	Transportation & Logistics			

* Validation not required for alpha/preliminary design description documents.

History Sheet

Rev	Reason for revision	Revised by
0	Initial issue. Supersedes 24590- LAW-3YD-LFP-00001, Rev 04, System Description for Low Activity Waste Melter Feed Process System (LFP) and 24590-LAW-3YD-LCP-00001, Rev 04, System Description for LAW Concentrate Receipt Process (LCP)	C. Kryworuk

Contents

Validation ii
History Sheet iii
1 Introduction 1
1.1 System Identification 1
1.2 Limitations and Scope 1
1.3 Ownership and Maintenance 2
1.4 Definitions/Glossary 2
1.5 Acronyms and System Designators 3
2 General Overview 5
2.1 System Functions/Safety Functions 5
2.2 System Classification 11
2.3 Basic Operational Overview 11
3 Design Requirements 12
3.1 Requirements 12
3.2 Bases 12
3.3 References 12
3.4 General Requirements 13
3.4.1 Mission and Functional / Performance Requirements (Including States/Modes) 13
3.4.2 Nuclear Safety, ALARA, Environmental, and Other Regulatory Requirements 20
3.4.3 System Interface Requirements 21
3.4.4 Other Technical, Specialty, Operations and Maintenance Requirements 22
3.5 Vessel Requirements 25
3.5.1 Mission and Functional / Performance Requirements (Including States/Modes) 25
3.5.2 Nuclear Safety, ALARA, Environmental, and Other Regulatory Requirements 26
3.5.3 System Interface Requirements 26
3.5.4 Other Technical, Specialty, Operations and Maintenance Requirements 27
3.6 Piping Requirements 29
3.6.1 Mission and Functional / Performance Requirements (Including States/Modes) 29
3.6.2 Nuclear Safety, ALARA, Environmental, and Other Regulatory Requirements 31
3.6.3 System Interface Requirements 31
3.6.4 Other Technical, Specialty, Operations and Maintenance Requirements 32
3.7 Pump Requirements 32
3.7.1 Mission and Functional / Performance Requirements (Including States/Modes) 32
3.7.2 Nuclear Safety, ALARA, Environmental, and Other Regulatory Requirements 33
3.7.3 System Interface Requirements 33
3.7.4 Other Technical, Specialty, Operations and Maintenance Requirements 34
3.8 Monitoring and Controls Requirements 34
3.8.1 Mission and Functional / Performance Requirements (Including States/Modes) 34
3.8.2 Nuclear Safety, ALARA, Environmental, and Other Regulatory Requirements 34
3.8.3 System Interface Requirements 42

3.8.4 Other Technical, Specialty, Operations and Maintenance Requirements 42

3.9 Other Structures, Systems, and Components Requirements 43
3.9.1 Mission and Functional / Performance Requirements (Including States/Modes) 43
3.9.2 Nuclear Safety, ALARA, Environmental, and Other Regulatory Requirements 44
3.9.3 System Interface Requirements 44
3.9.4 Other Technical, Specialty, Operations and Maintenance Requirements 44

3.10 Relevant Codes and Standards 44
3.10.1 Codes of Record 44
3.10.2 WTP Design Criteria, Design Guides, and General Specifications 45

4 System Description 49

4.1 Configuration Information 49
4.1.1 Description of System, Subsystems, and Major Components 49
4.1.2 Boundaries and Interfaces 56
4.1.3 LCP Interfacing Systems 57
4.1.4 LFP Interfacing Systems 58
4.1.5 Reserved 60
4.1.6 Principles of Operation 60
4.1.7 System Reliability Features 63
4.1.8 System Control Features 63

4.2 Reserved 85

4.3 Reserved 85

4.4 Reserved 85

5 Sources, Bases, and Other References 85

5.1 Source / Basis References 85

5.2 Other References 86

5.3 Design References 86

Appendices

Appendix A Test Objectives, Conditions, and Acceptance Criteria A-1

Appendix B Descriptions of System Functional Flow and Interactions B-1

Appendix C Active Safety Instruments and Functions C-1

Appendix D Reserved-System Procedures D-1

Appendix E Reserved-System History E-1

Tables

Table 2-1 Functional Analysis and Crosswalk to Requirements 9

Table 3-1 LAW Facility Key Design Features Assumed in Modeling 13

Table 3-2 LCP and LFP Equipment and Components Design Life 15
Table 3-3 LCP and LFP Seismic Design Categories 19
Table 3-4 LCP and LFP Seismic Design Categories 20
Table 3-5 LCP and LFP Safety Designations 21
Table 3-6 LCP and LFP System Interfaces 21
Table 3-7 LCP and LFP Applicable Codes and Standards 45
Table 3-8 WTP Design Criteria, Design Guides, and General Specifications Applicable to LCP and LFP 46
Table 4-1 LCP System Interfaces 57
Table 4-2 LFP Interfacing Systems 59
Table 4-3 Remote Continuous Controls for LAW LFP System 64
Table 4-4 Remote Discrete (On/Off) Controls for LAW LCP System 64
Table 4-5 Remote Discrete (On/Off) Control for LAW LFP System 66
Table 4-6 Trips and Interlocks for LAW LCP System 71
Table 4-7 Trips and Interlocks for LAW LFP System 74

Figures

Figure 2-1 LCP and LFP Context Diagram 6
Figure 2-2 LCP and LFP Simplified Process Flow Diagram 7
Figure 2-3 LCP and LFP Functional Block Diagram 8
Figure 4-1 Concentrate Receipt Vessel 51
Figure 4-2 Process Schematic for a Single CRV, MFPV and MFV 61
Figure 4-3 Simplified Diagram of the Melter Feed Process 62

1 Introduction

1.1 System Identification

This system design description (SDD) defines the technical and functional/performance requirements of the low-activity waste (LAW) concentrate receipt process system (LCP) and LAW melter feed process system (LFP). This document details the waste treatment requirements, environmental compliance requirements, and authorization basis requirements of the LCP and LFP systems as they are currently known and understood. This SDD describes the process and functional design requirements of the LCP and LFP systems, including the following:

- Services and utility requirements, operating materials and supplies, and other external interfaces
- Operations limits and design bases
- Other criteria and requirements pertinent to the design of the LCP and LFP systems

The LCP and LFP systems take waste from the Pretreatment (PT) Facility, mix the waste with glass formers, ensure the waste meets established characteristics through sampling, and transfers the waste with glass formers to the melter system. The boundaries, system interfaces, and functional description of the LCP and LFP systems are provided in Sections 2 and 3.4.3.

1.2 Limitations and Scope

The scope of this document is to provide an authoritative source for the collected set of requirements applicable to the LCP and LFP systems, inclusive of interface requirements with other systems. The SDD scope is limited to LCP and LFP system features that support production and/or protect equipment, personnel, and the environment. This SDD does not include any consideration of changes that may or may not be required to accommodate direct feed of tank waste (i.e., bypassing the PT Facility).

The SDD is prepared in accordance with 24590-WTP-3DP-G04B-00093, *System and Facility Design Descriptions*. The intended use of these collected requirements is to establish the following:

- Inform the LCP and LFP system design effort
- Provide a validated basis upon which to confirm implementation of design requirements
- Provide the expected means of verification for requirements, including those that are post-construction (i.e., startup and commissioning test objectives and acceptance criteria)

All requirements established in this document are intended to be verified to be implemented in design and/or physical configuration using a graded approach commensurate with importance and risk.

Where numeric values are provided within requirements in Section 3, these values are provided without additional margin. For example if a value is established in the Basis of Design, no attempt is made to remove any margin that may or may not have gone into the establishment of that value, neither has any margin been added. Where values are stated as minimums or maximums, there is no expectation that additional margin is applied in the verifications that the design requirements have been met. Testing that is required to be performed in accordance with external codes and standards must follow the rules established in those documents.

This document is intended to be used in support of design development, design verification, turnover, startup testing, and commissioning activities. This document will be maintained current relative to changes in source requirements documents. Updates shall be made concurrent with these changes to source requirements, or implementation shall be tracked for completion in accordance with 24590-WTP-GPG-ENG-0170, *Impact Evaluation*.

Engineers are expected to be able to use the requirements in Section 3 of this document as input for design development without recourse to the upper-tier source documents or searches of the Design Criteria Database (Technical Requirements Management System). Design engineers are still required to ensure that requirements contained with the discipline/functional standards incorporated by reference in Section 3 are followed. These documents contain additional criteria that are based on applications of external codes/standards, corporate best practices, and engineering management expectations for a consistent approach to design.

Certain requirement statements in this document are preceded by a "**[HOLD]**" notation. This notation is used when there are unresolved technical issues, known inconsistencies among source requirements, or other management suspensions of work requiring resolution. Requirements with the "**[HOLD]**" notation may be used to proceed with preliminary or committed design (with inclusion of appropriate holds) but shall not be used in support of fabrication or construction until the "**[HOLD]**" is removed.

The contents of section 4 are being developed in a phased approach in support of future operations and maintenance. At this revision, only the contents of sections 4.1.1 through 4.1.4 and 4.1.6 have been updated and verified. Sections 4.1.5, 4.2, 4.3 and 4.4 are currently reserved and will be updated in a later phase.

1.3 Ownership and Maintenance

The Design Authority (DA) organization is responsible for the preparation and maintenance of this document through turnover of the included systems to Operations. Thereafter, maintenance of this document is the responsibility of the Plant Engineering organization; however, the Engineering DA organization retains responsibility for the establishment and definition of design requirements.

1.4 Definitions/Glossary

Confinement. For consistency, regardless of usage elsewhere, confinement is used in this document to denote the controls used to prevent or minimize the release or migration of airborne contaminants, including aerosols, hazardous vapors, or gases.

Containment. For consistency, regardless of usage elsewhere, containment is used in this document to denote the controls used to prevent or minimize the release or migration of liquid or liquid-entrained contaminants.

Primary confinement / containment. The structures, systems, or components (SSCs) and their associated boundaries that confine or contain airborne and liquid contaminants under normal conditions.

Secondary confinement / containment. The structures or other design features that capture and prevent further spread or migration of airborne or liquid contaminants after they have escaped primary confinement or containment.

1.5 Acronyms and System Designators

Acronyms

A, I, D, T	analysis, inspection, demonstration, test
ADS	air displacement slurry
AHL	analytical hotcell laboratory equipment system
ALARA	as low as reasonably achievable
ARL	analytical radiological laboratory equipment system
ASJ	autosampling control system
ASME	American Society of Mechanical Engineers
BOD	basis of design
CCN	correspondence control number
CDI	configuration data index
COM	commissioning
CON	construction
CRV	concentrate receipt vessel
CSR	control system requirement
CTN	component tag number
D&D	decontamination and decommissioning
DA	Design Authority
DBE	design basis earthquake
DIW	demineralized water (system)
DOE	US Department of Energy
DST	double-shell tank
DVR	design verification report
ENG	engineering
EQP	equipment qualification package
FCR	facility control room
HEPA	high efficiency particular air (filter)
HLW	High-Level Waste (Facility)
HMI	human-machine interface
ICN	integrated control network
ILAW	immobilized low-activity waste
LAW	Low-Activity Waste (Facility)
LDB	leak detection box
LIMS	laboratory information management system
MCC	motor control center
MFPV	melter feed preparation vessels
MFV	melter feed vessels
MR	material requisition

MTG	metric tons of glass
N/A	not applicable
NFPA	National Fire Protection Association
NSE	Nuclear Safety Engineering
ORD	operations requirements document
P&ID	piping and instrumentation diagram
PAM	post-accident monitoring
PDSA	preliminary documented safety analysis
PPE	personal protective equipment
PPJ	programmable protection system
PT	pretreatment (facility)
REC	receiving
RVM	requirement verification matrix
SAI	safety affecting instrument (ation)
SBS	submerged bed scrubber
SC	safety class
SDD	system design description
SQR	supplier quality representative
SRD	safety requirements document
SS	safety significant
SSC	structures, systems, or components
SSRS	safety system requirements specification
SU	startup
SUB	subcontractor
SUP	supplier
TCP	treated LAW concentrate storage process system
WAC	Washington Administrative Code
WTP	Hanford Tank Waste Treatment and Immobilization Plant

System Designators

ASX	autosampling system
CHW	chilled water system
DIW	demineralized water system
GFR	glass former reagent system
ISA	instrument service air system
LCP	LAW concentrate receipt process system
LFP	LAW melter feed process system
LMP	LAW melter process system
LOP	LAW primary offgas process system
LVE	low voltage electrical (480/208/120 V) system

LVP	LAW secondary offgas/vessel vent process system
PSA	plant service air system
PCJ	process control system
PPJ	programmable protection system
PWD	plant wash and disposal system
RLD	radioactive liquid waste disposal system
RWH	radioactive solid waste handling system
TCP	treated LAW concentrate storage process system
UPE	uninterruptible power system

2 General Overview

The LCP receives LAW concentrate, within the LAW Facility, from the treated LAW concentrate storage process system (TCP) in the Pretreatment (PT) Facility. The LCP boundary begins 5 ft outside the LAW Facility and transitions into the LFP at valves LFP-YV-1121 and LFP-YV-2121 in LCP-BULGE-00003 and at valves LFP-YV-1122 and LFP-YV-2122 in LCP-BULGE-00002. The LCP mixes and stores the LAW in concentrate receipt vessels (CRVs). Samples of the LAW concentrate are taken and the results are used to determine the quantity of each glass former that is added to the waste. The CRVs transfer the LAW concentrate to the LFP melter feed preparation vessels (MFPVs) where glass formers are added and mixed in with the LAW concentrate to form the melter feed. The melter feed is transferred from the MFPVs to the melter feed vessels (MFVs) for staging. The MFVs may also be sampled, but this is not part of the normal process control. The MFVs are capable of supplying the melter feed to the LAW melter process system (LMP) with continuous feed for glass production. The LFP boundary ends after the MFV on the outlet from the air displacement slurry (ADS) pump discharge line to the LMP. The LFP contains the MFPVs and MFVs (LFP vessels), including the associated piping, inline components, and equipment such as pumps and agitators.

Figure 2-1 provides a contextual depiction of the LCP and LFP systems in terms of their primary interrelationships with other systems and utilities. This diagram does not differentiate among some utilities that have both normal and safety significant functions. This diagram is used in support of functional and performance definition at the system level. Figure 2-2 provides a simplified process flow diagram of the overall LCP and LFP systems. Blue arrows are used in these figures to highlight the primary flow path of the LCP and LFP systems, orange arrows show the abnormal transfer lines between vessels in separate melter trains, and black arrows illustrate the supporting systems, utilities, and secondary flow paths. See Section 1.5 for the list of relevant system designators.

2.1 System Functions/Safety Functions

This section defines the LCP and LFP functions and attributes that need to be addressed by the system design. Figure 2-3 provides the functional block diagram for the LCP and LFP systems, indicating the internal and external systems and utilities that provide the primary support or interface for that function. Section 3 provides the design and performance design requirements to meet both functional and other requirements.

System interfaces are provided for reference only. See Section 1.5 for the list of relevant system designators. The functions included in Figure 2-3 are the primary and secondary level functions of the LCP and LFP systems. These functions are further described in Table 2-1. Where appropriate to support definition of functional and design requirements, functions have been further decomposed and additional levels of supporting functions are

also described. The requirement section number provides the location of the applicable functional analysis incorporated into system requirements.

Figure 2-1 LCP and LFP Context Diagram

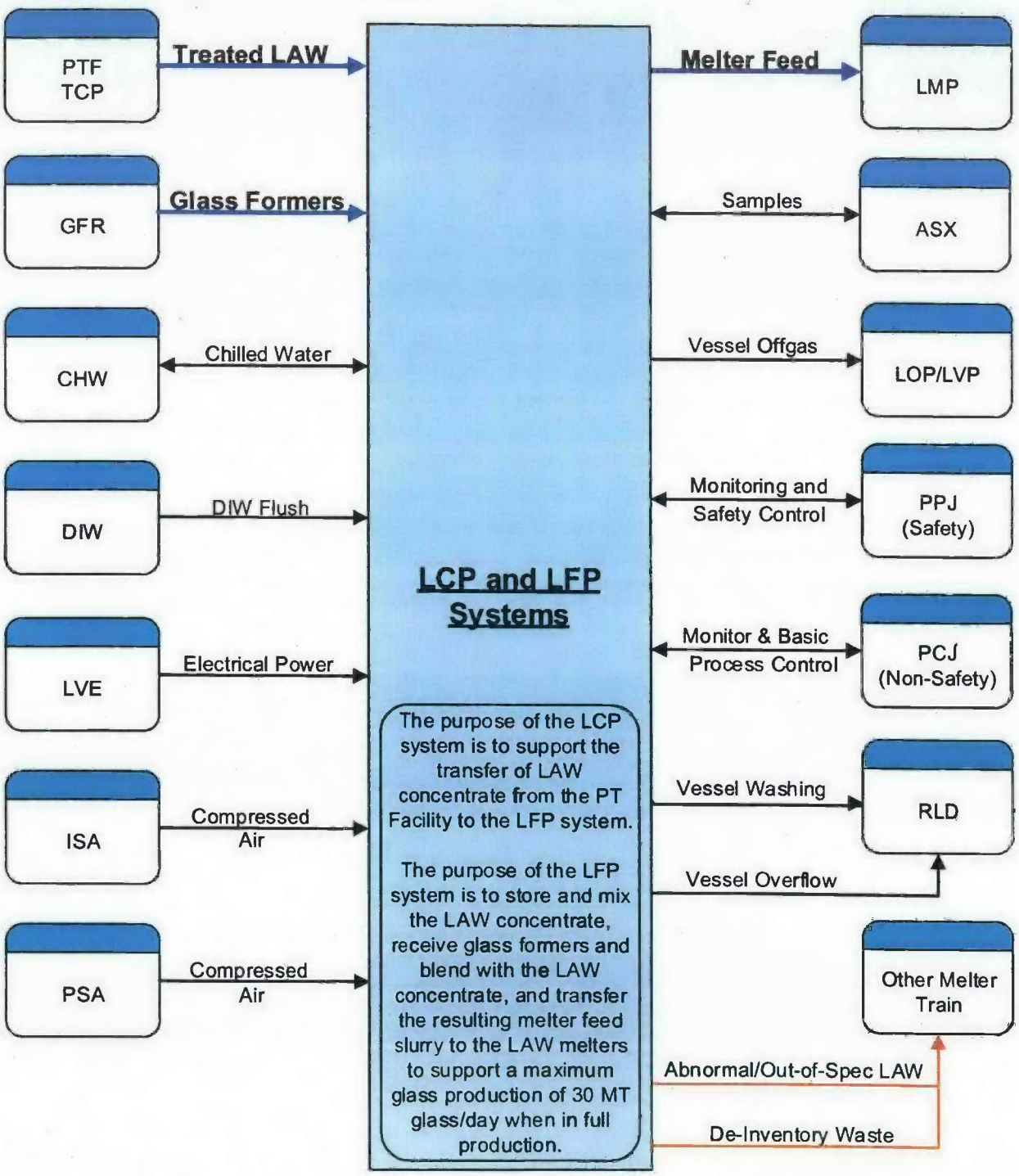

Figure 2-2 LCP and LFP Simplified Process Flow Diagram

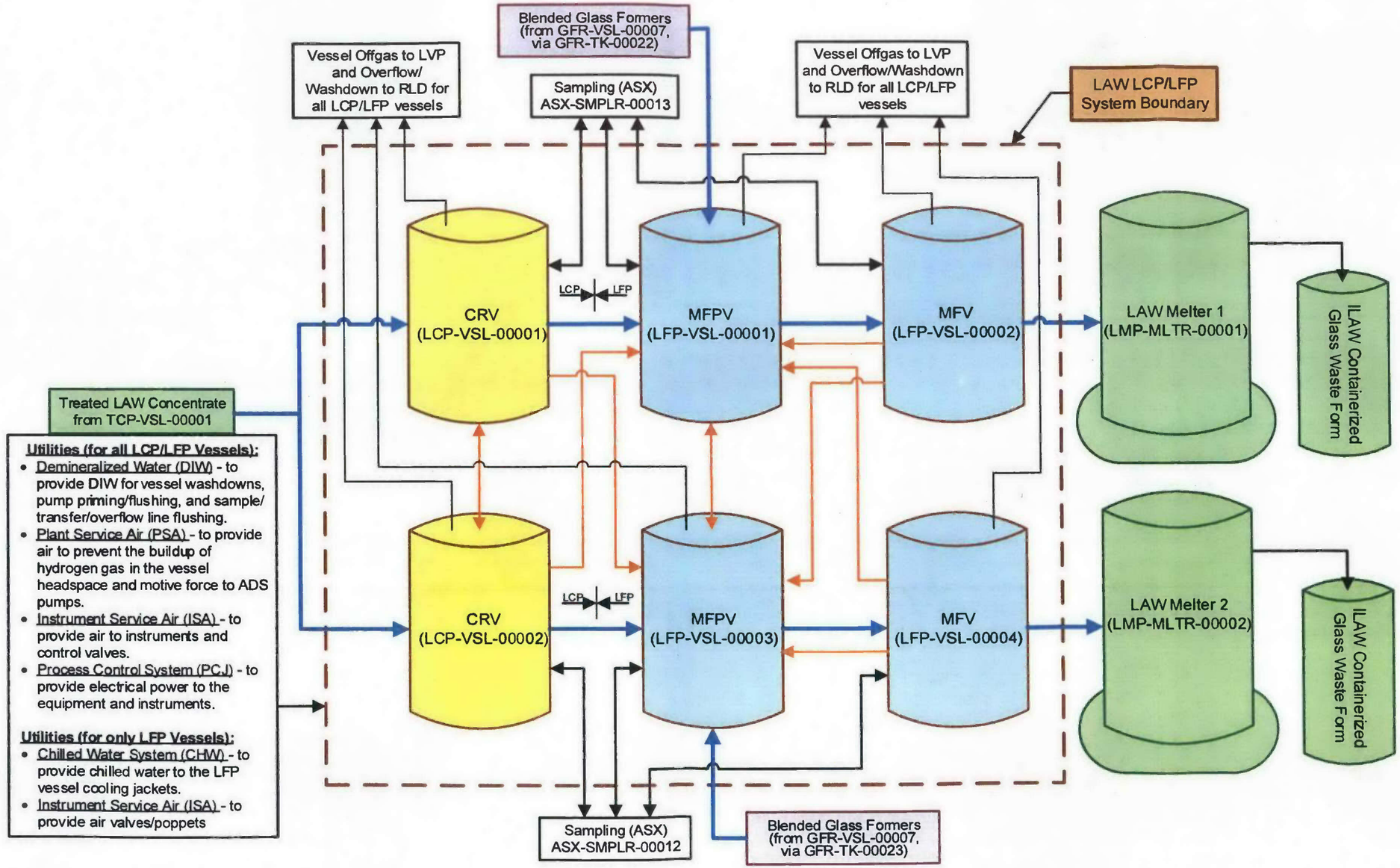

Figure 2-3 LCP and LFP Functional Block Diagram

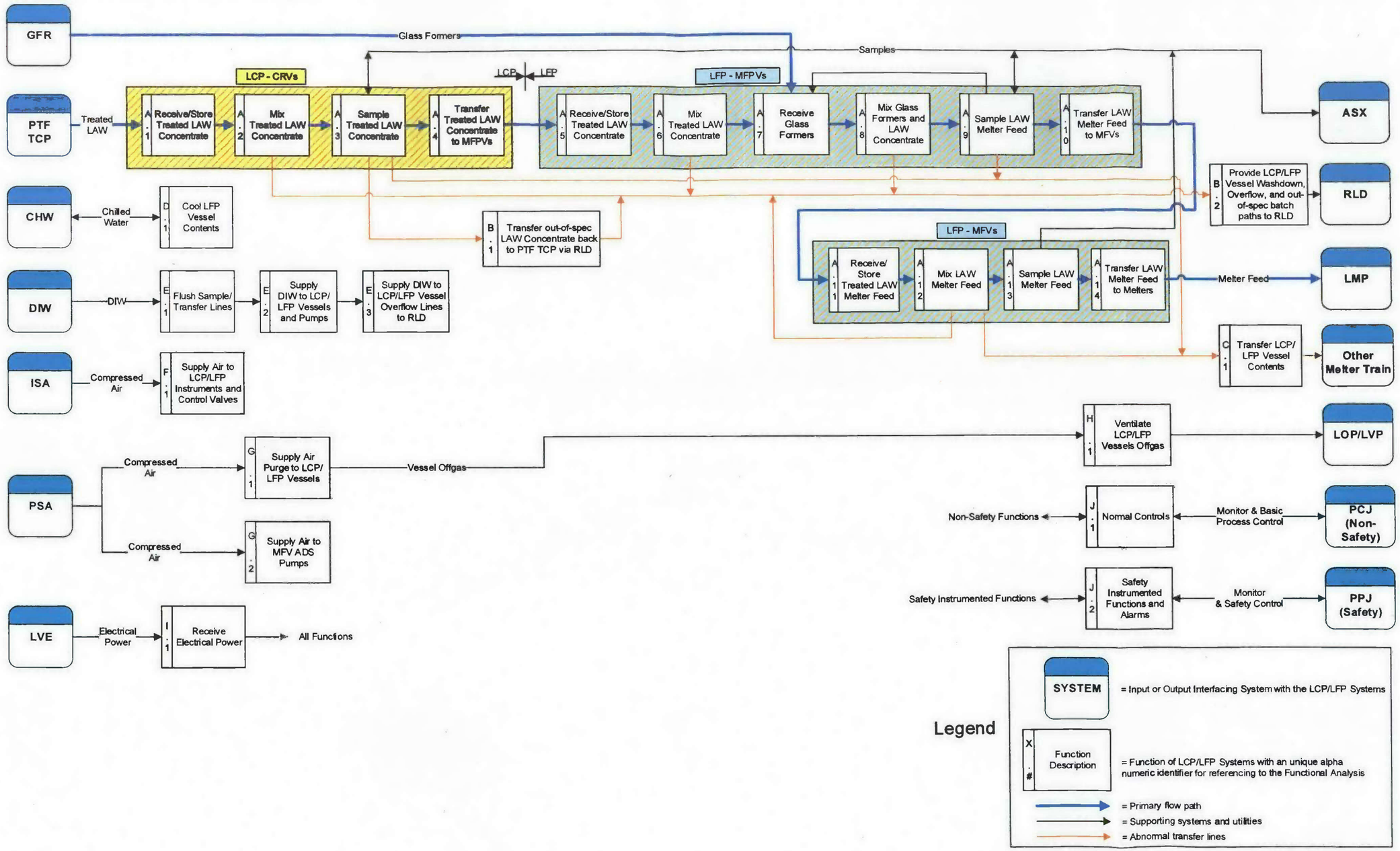

Appendix B provides a further decomposition of system terminating, and integrating events and functions.

Table 2-1 Functional Analysis and Crosswalk to Requirements

Reference	Functional Analysis Description	Requirement Section No.
A.	**Receive Waste, Glass Formers, and Prepare LAW Melter Feed for Vitrification**	N/A
A.1	Receive treated LAW concentrate - The LCP CRV receives LAW concentrate from the treated LAW concentrate storage process system (TCP) in the PT Facility via the LCP piping. The CRV interfaces with the autosampling system (ASX) to sample and characterize the LAW concentrate before transferring to the LFP MFPV.	3.4.1.1
A.2	Mix treated LAW concentrate - The LAW concentrate is mixed in the LCP CRV before transferring to the ASX, which collects a representative sample for analysis to determine the glass former recipe.	3.5.3.3 3.5.4.2.1
A.3	Sample treated LAW concentrate - The LAW concentrate is transferred from the CRV to the ASX and returns back to the CRV using a circulation loop. The ASX uses an auto sampler to extract a representative sample for analysis in the Analytical Laboratory. Sample data is returned, which determines the quantity of each glass former added to the waste to produce glass that meets glass property.	3.5.3.3
A.3.1	Flush sample line - DIW is used to flush the sample recirculation line.	3.6.3.1
A.4	Transfer LAW melter feed to MFPVs - Conforming LAW melter feed is transferred from the CRV to the MFPV.	3.4.1.1
A.4.1	Flush transfer line - DIW is used to flush the transfer line into the CRV.	3.6.3.1
A.5	Receive treated LAW concentrate - The LFP MFPV receives LAW concentrate from the LCP CRV. The MFPV interfaces with the ASX to sample and confirm the melter feed meets glass property and waste loading requirements for each particular batch	3.4.1.1
A.6	Mix treated LAW concentrate - The LAW concentrate is mixed in the LFP MFPV before receiving glass formers from the glass former reagent system (GFR).	3.5.3.3 3.5.4.2.1
A.7	Receive glass formers - The MFPV receives glass formers from the GFR. The proper proportions of various glass formers are added to the LAW concentrate, and mixed to prepare LAW feed material.	3.5.3.4
A.8	Mix glass formers with LAW concentrate - A mechanical agitator mixes glass formers and LAW concentrate in the MFPV to ensure data quality objectives are met in support of waste form qualification.	3.5.3.3 3.5.4.2.1
A.8.1	Flush sample line - DIW is used to flush the sample recirculation line.	3.6.3.1
A.9	Sample LAW melter feed - Representative samples of the LAW melter feed are taken from the MFPV by the ASX and analyzed to confirm the feed meets glass property and waste loading requirements for each particular batch. If the melter feed is not acceptable, additional glass formers can be added.	3.5.3.3
A.10	Transfer LAW melter feed to MFVs - Conforming LAW melter feed is transferred from the MFPV to the MFV.	3.4.1.1
A.11	Receive treated LAW concentrate - The LFP MFV receives LAW concentrate from the LFP MFPV.	3.4.1.1
A.12	Mix LAW melter Feed - The LAW melter feed is continuously mixed while being staged in the MFV before transferring to the melter for vitrification.	3.5.4.2.1

Reference	Functional Analysis Description	Requirement Section No.
A.13	Sample LAW melter feed - Representative samples of the LAW melter feed are taken from the MFV by the ASX and analyzed to confirm the feed meets glass property and waste loading requirements for each particular batch. If necessary, off-spec waste may be amended by further transfers from the MFPV (A.11) or may be transferred to the other melter train (C.1).	3.5.3.3
A.14	Transfer LAW melter feed to melters - Except for periodic line flushes, LAW feed is transferred from the MFV to the melter for vitrification as a low volumetric rate stream.	3.4.1.1
B.	**Transfer PT TCP out-of-spec LAW, Vessel Washdowns and Overflows to RLD**	N/A
B.1	Transfer out-of-spec LAW concentrate back to PT TCP via RLD - The out-of-spec LAW will be diluted with DIW and directed back to the PT Facility via the radioactive liquid waste disposal system (RLD).	3.5.3.5 3.4.3
B.2	Transfer LCP/LFP vessel washdowns and overflows to RLD - The LCP/LFP vessel washdowns and overflowed liquid will be directed to the RLD.	3.5.3.5 3.4.3
C.	**LCP/LFP Vessel Cross-ties Between Melter Trains**	N/A
C.1	Transfer LCP/LFP vessel contents - The LCP/LFP vessel contents can be removed and transfer off spec feed to the other melter train.	3.4.4.1
D.	**Cool LFP Vessels**	N/A
D.1	Cool LFP vessel contents - Each LFP vessel is cooled using water jackets and chilled water supplied by the LAW chilled water system (CHW) to remove heat generated by mixing and radioactive decay.	3.4.3
E.	**Supply LCP/LFP Vessels with DIW**	N/A
E.1	Flush sample/transfer lines - DIW is provided to flush the sample/transfer lines to prevent plugging.	3.6.3.1
E.2	Supply DIW to LCP/LFP vessels and pumps - DIW is used for priming the sample/transfer pumps to clear the pump and to initiate the pump, without waste, until the pump reaches operating capacity.	3.7.3.1.1 3.5.3.2
E.3	Supply DIW to LCP/LFP vessel overflow lines to RLD - DIW is used to flush the overflow line from the LCP/LFP vessels to the RLD.	3.6.3.1
F.	**Air Supply to Instruments and Control Valves**	N/A
F.1	Supply Air to LCP/LFP instruments and control valves - Compressed air from the instrument service air system (ISA) is supplied to LCP/LFP instruments and control valves.	3.4.3
G.	**Air Purge Vessel Headspace**	N/A
G.1	Supply Air Purge to LCP/LFP vessels - Compressed air from the plant service air system (PSA) provides a purge flow during normal mixing operations. The purge air flow is provided to prevent the buildup of hydrogen gas in the vessel headspace.	3.5.4.3
G.2	Supply Air to MFV ADS pumps - Compressed air from the PSA is supplied to MFV ADS pumps to provide the motive force for transferring LAW to the melters.	3.7.1.1 3.7.3.2.1
H.	**Ventilate LCP/LFP Vessels**	N/A
H.1	Ventilate LCP/LFP vessel offgas - Negative headspace pressure is maintained in the LCP/LFP vessels	3.5.4.3
I.	**Electrical Power**	N/A
I.1	Receive Electrical Power - The low voltage electrical (480/208/120 V) system (LVE) provides electrical power to the LCP/LFP equipment and instruments.	3.4.3
J.	**Support Monitoring, Control, and Communication Functions**	

Reference	Functional Analysis Description	Requirement Section No.
J.1	PCJ - Normal Controls	N/A
J.1.1	The LCP / LFP process shall be monitored and controlled by the PCJ system.	3.8.1.1
J.2	PPJ - Safety Instrumented Functions and Alarms	N/A
J.2.1	ADS Pump Interlocks – The ADS pump interlocks will terminate melter feed to the affected melter(s) upon detection of: • Melter Plenum High Pressure (Reduced Vacuum) • Melter Offgas Exhauster Shaft Seal Backup Air Low Pressure • MFV High Liquid Level • Melter Lid Cavity Cooling Water High Temperature • SBS Low or High Liquid Level • LVP HEPA Filter High Differential Pressure • Mercury Mitigation Skid (Carbon Bed Adsorbers) High Differential CO/CO_2 • Caustic Scrubber Recirculation Line Low Flow • LVP Header Low Vacuum • Loss of Normal Power	3.8.2.2.1 3.8.2.2.2 3.8.2.2.3 3.8.2.2.4 3.8.2.2.5 3.8.2.2.6 3.8.2.2.7 3.8.2.2.8 3.8.2.2.9 3.8.2.2.10

2.2 System Classification

The LFP and LCP systems contain components with the following classifications/designations:

- ☐ Safety Class
- ☒ Safety Significant
- ☒ Dangerous Waste Permit affecting
- ☐ Air Permit affecting
- ☐ Waste Acceptance Impacting
- ☒ General

2.3 Basic Operational Overview

A functional description of the system is provided in Sections 2 and 2.1, which provide the context diagram for the system, interfaces with other systems, a simplified system diagram, a functional block diagram, and descriptions of the system functions. A basic operational system overview is described in this section. Detailed operational information is provided in Section 4.

The LCP and LFP systems are located in the LAW Facility of the Hanford Tank Waste Treatment and Immobilization Plant (WTP). The LCP receives LAW concentrate from the PT Facility TCP and delivers it to the LFP. The LFP melter feed preparation vessels (MFPVs) receive the LAW concentrate from the LCP CRVs and interfaces with the ASX to sample the waste. LAW melter feed is a mixed, sampled, characterized, and listed waste regulated under the *Resource Conservation and Recovery Act*, which must meet specific treatment and performance standards for storage and repository disposal of the final waste form in accordance with the specific requirements of Contract DE-AC27-01RV14136, *DOE/BNI WTP Contract Mod No. 304, Section C - Statement of Work* (WTP Contract). The sample results determine the quantity of each glass former added to the waste to produce glass that meets glass property and waste loading requirements for each particular batch. The proper proportions of various glass formers are prepared, mixed, moistened, added to the LAW concentrate, and mixed to prepare the LAW melter feed. A confirmatory sample is used to ensure the resultant glass product will be

acceptable to the US Department of Energy (DOE). The resulting compliant melter feed is transferred from the MFPVs to the MFVs. The melter feed is transferred from the MFV into one of the two-joule heated LAW melters, which are part of the LMP. The melter glass output mixture will be poured into stainless-steel canisters. The vitrified waste in the canisters is referred to as immobilized LAW (ILAW).

3 Design Requirements

3.1 Requirements

Requirements are documented in Sections 3.4 through 3.9.4.1. Each requirement statement is accompanied by a basis discussion (as needed) and the expected means of verification. Requirements must be met in design. If a requirement stated in this document cannot be met in design, a revision to the requirement needs to be pursued, if possible, or the design must be changed to meet the requirement.

Requirements preceded by "**[HOLD]**" may only be used in support of preliminary or committed design, which shall also be issued with appropriate holds per procedure 24590-WTP-3DP-G04B-00046, *Engineering Drawings*. These requirements may not be used in support of fabrication or construction.

The following abbreviations are used to designate the selected method for verification (see 24590-WTP-GPG-ENG-0161, *Technical Requirements Management*, for additional guidance concerning methods of verification):

(I) Inspection
(A) Analysis
(D) Demonstration
(T) Test

The following abbreviations are used to designate the organization responsible for performing the verification:

(ENG) Engineering
(CON) Construction
(SU) Startup
(COM) Commissioning
(SUP) Supplier
(SUB) Subcontractor
(SQR) Supplier Quality Representative
(REC) Receiving

3.2 Bases

Basis discussions are provided as needed to explain the decomposition or interpretation from the originating source requirement(s). Where a **[HOLD]** has been applied to a requirement, this section will include the basis for the "HOLD".

3.3 References

The requirements include a source document reference and a DOORS® Unique Identification Numbers (hereafter referred to as Identification Numbers or IDs). Each unique source document reference, with ID number(s), is bracketed separately. Requirements may include a reference to the Section 2.1, Functional Description, listed in

parentheses following the source document and ID number references. A complete listing of all source references is provided in Section 5.

3.4 General Requirements

3.4.1 Mission and Functional / Performance Requirements (Including States/Modes)

The following sections detail requirements for the LCP and LFP system design. These requirements are subject to verification as indicated. Alternate means of verification may be used as documented and concurred with by System Engineering in the requirements verification matrix. Where included, basis discussions provide supplementary information to help the reader understand the origin or intent of a requirement. Basis statements do not include requirements and are not to be considered requirements.

3.4.1.1 LCP and LFP Throughput Capacity

Requirement: The LCP and LFP systems shall designed to support the LAW design capacity of 30 MTG per a day and a treatment capacity of 24 MTG per day. [Section C.6.5(e)(3)(ii)(A), No. DE-AC27-01RV14136, *DOE/BNI Contract,* [ID : DE-AC27-01RV14136 Section C ID#1619]] (A.1, A.4, A.5, A.10, A.11, A.14).

Basis Discussion: The design throughput (processing) capabilities for the LCP and LFP systems are defined in Section 6.3.2 of the BOD. Software models are used to validate the design throughput capacity is met by the designed systems, inclusive of treatment processes, individual system and component capabilities, and equipment reliability and maintainability inputs. The LCP is designed to accommodate the receipt and treatment of specific waste volumes, using batch processing, to meet the design throughput requirements. The throughput rates are a function of the feed characteristics in a given batch volume. Batch volume and nominal transfer rate are used as inputs in the overall throughput analysis to ensure LCP and LFP systems operations are designed to support the 100 % capacity melter throughput for glass production of 15 metric tons of glass (MTG)/day/melter (30 total MTG/day), as stipulated in the WTP Contract.

The batch volume includes LAW concentrate, line flushes, and glass formers.

The LAW key design features in the table below are assumed in the modeling, and ORP concurrence is required before the capability can be reduced in the design.

Table 3-1 LAW Facility Key Design Features Assumed in Modeling

Vessel	Design Batch Volume (gal)	Exiting Transfer Rate (gpm)
LCP-VSL-00001/2	9,115	88
LFP-VSL-00001/3	3,300	50
LFP-VSL-00002/4	3,300	3.4

Verification: Verification is expected to be achieved through the following:

Verif. Method	Verif. By	Plan	Notes/Comments
A	ENG	Perform an analysis of the LCP and LFP piping systems, ancillary equipment, vessels, and transfer rates based on meeting the capacities required.	
I	ENG	Review the design to verify conformance with the analysis.	
T	SU/ COM	Perform an integrated system test to verify the design batch capacities and transfer rate of the systems.	

3.4.1.2 MFV ADS Pump Redundancy

Requirement: The melter is fed from three zones with two pumps in each zone. Each pump shall be able to support a zone by itself for continued melter operations. [Section 15.3.3 BOD, [ID : DB-ENG-01-001 ID#12700]].

Basis Discussion: The design throughput (processing) capabilities are defined in Section 6.3.2 of the BOD. The LCP and LFP systems are designed to accommodate the receipt and treatment of specific waste volumes, using batch processing capabilities, to meet the design throughput requirements. The throughput rates are a function of the feed characteristics in a given batch. Melter feed rate is designed to support the 100 % capacity glass production rate of 30 total MTG/day.

The inputs and assumptions used to design the ADS pumps are discussed in *LAW Melter Feed Process System (LFP) Data* 24590-LAW-MVC-LFP-00001.

Verification: Verification is expected to be achieved through the following:

Verif. Method	Verif. By	Plan	Notes/Comments
I	ENG	Review of design to verify each ADS pump can support a melter zone.	**CTNs:** LFP-PMP-00007 to -00012 and LFP-PMP-00013 to -00018

3.4.1.3 CRV Maximum Capacity

Requirement: The CRV vessels (LCP-VSL-00001/2) shall each have a capacity conforming to the maximum capacity stated in the Dangerous Waste Permit. [Dangerous Waste Portion of RCRA Permit, Section III.10.E.9, [ID : WA7890008967 WTP ID#360]].

Basis Discussion:

The inputs and assumptions used to design these vessels are discussed in *LAW LCP and LFP Batch Volumes* 24590-LAW-M4C-20-00002.

Verification: Verification is expected to be achieved through the following:

Verif. Method	Verif. By	Plan	Notes/Comments
I	ENG	Review of design to verify each vessel has a maximum capacity conforming to the maximum capacity stated in the Dangerous Waste Permit.	**CTNs:** LCP-VSL-00001/2

3.4.1.4 MFPV Maximum Capacity

Requirement: The MFPV vessels (LFP-VSL-00001/3) shall each have a capacity conforming to the maximum capacity stated in the Dangerous Waste Permit. [Dangerous Waste Portion of RCRA Permit Section III.10.E.9, [ID : WA7890008967 WTP ID#360]].

Basis Discussion: The batch volume includes LAW concentrate, line flushes, and glass formers.

The inputs and assumptions used to design these vessels are discussed in *LAW LCP and LFP Batch Volumes* 24590-LAW-M4C-20-00002.

Verification: Verification is expected to be achieved through the following:

Verif. Method	Verif. By	Plan	Notes/Comments
I	ENG	Review of design to verify each vessel has a maximum capacity conforming to the maximum capacity stated in the Dangerous Waste Permit.	**CTNs:** LFP-VSL-00001/3

3.4.1.5 MFV Maximum Capacity

Requirement: The MFV vessels (LFP-VSL-00002/4) shall each have a capacity conforming to the maximum capacity stated in the Dangerous Waste Permit. [Dangerous Waste Portion of RCRA Permit Section III.10.E.9, [ID : WA7890008967 WTP ID#360]].

Basis Discussion: The batch volume includes LAW concentrate, line flushes, and glass formers.

The inputs and assumptions used to design these vessels are discussed in *LAW LCP and LFP Batch Volumes* 24590-LAW-M4C-20-00002.

Verification: Verification is expected to be achieved through the following:

Verif. Method	Verif. By	Plan	Notes/Comments
I	ENG	Review of design to verify each vessel has a maximum capacity conforming to the maximum capacity stated in the Dangerous Waste Permit.	**CTNs:** LFP-VSL-00002/4

3.4.1.6 Design (Operating) Life

Requirement: Except as noted in the table below, non-replaceable, permanent LCP and LFP system plant equipment listed in Table 3-2 shall be designed for a minimum design life of 40 years, inclusive of maintenance. All non-maintainable items of LCP and LFP system equipment shall be designed to last the life of the facility (40 years). Design life of equipment shall consider the effects of chemical, radiological and thermal exposure. [Sections 11.1.1, 11.7.4, BOD, [ID : DB-ENG-01-001 ID#11367], [ID : DB-ENG-01-001 ID#11368], [ID : DB-ENG-01-001 ID#11528]] [Section 14.2, ORD, [ID : WTP-RPT-OP-01-001 ID#1474]].

Table 3-2 LCP and LFP Equipment and Components Design Life

Equipment/Component Description	Design Life (Years)
CRVs	40
MFPVs	40
MFVs	40
Mechanical Agitators	>25

Table 3-2 LCP and LFP Equipment and Components Design Life

Equipment/Component Description	Design Life (Years)
Sample/Transfer Pumps	>5 (Target design life is 20 yr)
ADS Pumps	>5
Valve Cartridges Located in Bulges	10
Welded Piping	40

Basis Discussion: Equipment and material selection is based on proven performance, value engineering principles, and fit-for-function principles. The selection of equipment and materials is further addressed in detail as the design progresses. Equipment design needs to consider the routine environmental exposures under normal operations for non-safety equipment; safety equipment also considers abnormal and emergency exposures—this minimizes the need for equipment maintenance, exposure, and radiological waste generation in radiological areas. [ALARA]

References for Design Life <40 years:

- Mechanical Agitators - Section 3.2.2 of 24590-WTP-3PS-MACS-T0003, *Engineering Specification for Mechanical Agitators*
- Sample/Transfer Pumps - Section 3.2.1 of 24590-WTP-3PS-MPC0-T0009, *Engineering Specification for Vessel-Mounted Vertical Transfer Pumps - WTP LAW Facility*
- ADS Pumps - Section 3.3 - Item D of 24590-WTP-3PS-M000-T0001, *Engineering Specification for Air Displacement Slurry Pumps*
- Valves Located in Bulges – 24590-LAW-MXD-LFP-00001/2, *LFP-Bludge-00001/2 – Melter 1/2Feed/Preparation Valve Bulge*
- Inline components (valves, instruments) - Reliability to minimize impacts to plant availability

Verification: Verification is expected to be achieved through the following:

Verif. Method	Verif. By	Plan	Notes/Comments
I	ENG	The "qualified" design life verification for safety SSCs is to be verified through review of equipment design as documented in equipment qualification packages.	Design life for safety equipment to be documented in equipment qualification packages.
I	ENG	Review design to verify design life of non-replaceable, non-maintainable SSCs is documented in procurement documents and supported by supplier certificates of conformance.	May be documented in an assessment/evaluation.

3.4.1.7 Materials of Construction and Erosion/Corrosion Design Parameters

Requirement: The LCP and LFP systems shall be designed to include allowance for erosion/corrosion and use of materials of construction for the fluid service conditions in order to meet the life expectancy that is identified in Section 3.4.1.6 of this SDD. [Section 11.9, BOD, [ID : DB-ENG-01-001 ID#11572]].

Basis Discussion: The allowance for erosion/corrosion and applicable materials of construction are limited to those components that come into contact with the process fluids and that are required to maintain confinement/containment of those process fluids. Materials of construction that can withstand the

erosive/corrosive low-activity waste effluents and chemicals are selected. The materials for the LAW Facility LCP and LFP system equipment and components should be selected based on the stream data presented in the process corrosion data sheet report. If vessel washing via internal spray mechanisms is needed to prevent or minimize corrosion, the operational limitation shall be identified in the vessel corrosion evaluation. Refer to Tables A-26, B-16, B-17; 24590-WTP-DB-PET-09-001, Process Inputs Basis of Design (PIBOD); and 24590-WTP-M4C-V11T-00024, WTP Process Flowsheet Mass & Energy Balance Analysis for Input to Material Selection Assessments, for the fluid characteristics of the process streams.

Details of the allowed materials and corrosion allowances can be found in:

•24590-LAW0-N1D-LCP-00001, LCP-VSL-00001 and LCP-VSL-00002 (LAW) LAW Concentrate Receipt Vessel

•24590-LAW-N1D-LCP-00002, LCP-PMP-00001A/B and LCP-PMP-00002A/B (LAW) Concentrate Receipt Pump

•24590-LAW-N1D-LFP-00004, LFP-VSL-00001 and LFP-VSL-00003 (LAW) Melter 1 and 2 Feed Preparation Vessels

•24590-LAW-N1D-LFP-00006, LFP-VSL-00002 and LFP-VSL-00004 (LAW) Melter 1 and 2 Feed Vessels

•24590-LAW-N1D-LFP-00001, LFP-HX-00001/2/3/4 (LAW) Cooling Jacket

[ALARA]

Verification: Verification is expected to be achieved through the following:

Verif. Method	Verif. By	Plan	Notes/Comments
A/I	ENG	Perform an analysis/inspection of materials used in the LAW Facility LCP and LFP systems which are in contact with, and are required to maintain confinement or containment of, the process fluids to verify that they are acceptable for use in the operating environment and have adequate erosion and corrosion allowances.	
I	ENG	Review design components used in the LAW Facility LCP and LFP systems which are in contact with, and are required to maintain confinement or containment of, the process fluids for concurrence with analysis.	

3.4.1.8 Room Environment Conditions for Safety SSCs

Requirement: The SSCs in the LAW Facility LFP system credited with safety function(s) and post accident monitoring instruments shall be designed and qualified to perform their safety function(s) as intended in the environment conditions associated with the events for which they are intended to respond, inclusive of aging effects, throughout their qualified life. [Safety Criterion 4.1-3, Safety Criterion 4.4-1, SRD, [ID : SRD-ESH-01-001-02 ID#1519], [ID : SRD-ESH-01-001-02 ID#53]] [Section 11.7.3, BOD, [ID : DB-ENG-01-001 ID#11524], [ID : DB-ENG-01-001 ID#11526]].

Basis Discussion: Safety SSCs designated as safety significant (SS) are designed and qualified to function as intended in the room environment conditions associated with the events for which they are intended to respond. The effects of aging on normal and abnormal functioning are considered in design and qualification. LAW Room Environment Data Sheet, 24590-LAW-U0D-W16T-00001 identifies environmental conditions for rooms that house safety SSCs. 24590-LAW-RPT-ENS-12-001, LAW Post Accident Monitoring Report identifies PAM instrumentation.

[ALARA]

Verification: Verification is expected to be achieved through the following:

Verif. Method	Verif. By	Plan	Notes/Comments
A/T	ENG	Perform analysis or testing to verify the ability of the SSCs credited with a safety function to withstand the service conditions specified in LAW Room Environment Data Sheet, 24590-LAW-U0D-W16T-00001.	Document in equipment qualification package. See LAW Room Environment Data Sheet, 24590-LAW-U0D-W16T-00001, for room environment conditions.
I	ENG	Review the design to verify conformance to the as-tested or as-analyzed configuration.	Document in an assessment/report or EQP.

3.4.1.9 Protection of Safety Equipment from Water Spray

Requirements: The SS instrumentation and electrical equipment shall be designed with appropriate National Electrical Manufacturers Association (NEMA) ratings to survive exposure to water sprays, where such instrumentation and electrical equipment is co-located near water lines. Equipment enclosures shall be suitable for the area classification, as defined in NEMA 250, *Enclosures for Electrical Equipment (1000 Volts Maximum)* in which they are installed. [Section 4.4.19.3, PDSA – LAW Facility, [ID : WTP-PSAR-ESH-01-002-03 ID#12182]].

Basis Discussion: The SS instrumentation and electrical components that could be exposed to a water spray from the nonseismic failure of nearby water lines (e.g., water lines that are not safety and have no intervening splash barriers) must be designed to experience the water spray without the facility losing the required safety function. This is accomplished by designing the equipment to survive exposure to water without loss of function. NEMA 250 is the applicable standard for those instruments and electrical components that must survive a water spray from nearby water lines without loss of safety function.

Verification: Verification is expected to be achieved through the following:

Verif. Method	Verif. By	Plan	Notes/Comments
A	ENG	Determine which SS instruments are subject to water spray based on the SS proximity to nearby waterlines.	
I	ENG	Review design to verify that these instrument enclosure are designed according to standard NEMA 250.	

3.4.1.10 Room Environment Conditions for Non-Safety SSCs

Requirement: The LAW Facility LCP and LFP system equipment and components tagged non-safety shall be designed to operate and withstand the internal environment conditions of the LAW Facility. [Table 12-1, BOD, [ID : DB-ENG-01-001 ID#13175], [ID : DB-ENG-01-001 ID#13176]] [Sections 11.16, 16.1, ORD, [ID : WTP-RPT-OP-01-001 ID#1373], [ID : WTP-RPT-OP-01-001 ID#1606]].

Basis Discussion: Non-safety SSCs are designed to function as intended in the room environment conditions associated with their location.

Verification: Verification is expected to be achieved through the following:

Verif. Method	Verif. By	Plan	Notes/Comments
I	ENG	Review of design of non-safety, active SSCs to verify compliance with BOD Table 12-1 conditions.	May be documented in an assessment/evaluation report.

3.4.1.11 Seismic Design

Requirement: The LCP and LFP system equipment, including PAM, shall be designed for seismic conditions in accordance with the table below: [Sections 4.4.19.3, PDSA - LAW Facility, [ID : WTP-PSAR-ESH-01-002-03 ID#12183]] [Section 16.4.2.1, BOD, [ID : DB-ENG-01-001 ID#12804]].

Table 3-3 LCP and LFP Seismic Design Categories

Description	Seismic Category	Reference
Melter Feed Vessel Safety Level Instrumentation	SC-III	Section 4.4.19.3 PDSA - LAW Facility
Melter Feed ADS Pump Water and Air Supply Isolation Valves	SC-III	Section 4.4.19.3 PDSA - LAW Facility
PAM instruments	Seismic category designations per PAM report*	Safety Criterion 4.3-4, SRD

*24590-LAW-RPT-ENS-12-001, *LAW Post Accident Monitoring Report*

Basis Discussion: 24590-WTP-PSAR-ESH-01-002-01, Preliminary Documented Safety Analysis to Support Construction Authorization; General Information, states "All components and parts of the equipment that provide or contribute to the safety functions and accident monitoring functions, including equipment supports and anchorage, shall be qualified accordingly." This qualification ensures SSCs meet the designated seismic design requirements. Safety Criterion 4.1-3 in the safety requirements document (SRD) details the equivalence of the WTP seismic category to the seismic performance category of DOE-STD-1020-94, Natural Phenomena Hazards Design and Evaluation Criterial for Department of Energy Facilities. The SRD also states that SSCs designated as safety SSCs be designed to withstand the effects of natural phenomena hazard events (e.g., earthquakes, wind, and floods) without loss of capability to perform specified safety functions.

[ALARA]

Verification: Verification is expected to be achieved through the following:

Verif. Method	Verif. By	Plan	Notes/Comments
A/T	ENG/ SUP	Analysis or test performed on equipment listed in Table 3-2 to demonstrate capability to withstand seismic event.	This is expected to be documented in the EQPs.
I	ENG	Review design to verify conformance to the as-tested/as-analyzed configuration.	May be accomplished by EQP or separate assessment/evaluation.

3.4.1.12 Seismic Design for Interaction Effects

Requirement: The permanently mounted SSCs specified below, at a minimum, shall be designated Seismic Category-IV. Interaction effects shall be considered when determining the seismic category of individual items and, where an adverse seismic interaction with SC or SS equipment exists, adequate measures shall be taken to preclude the adverse interaction. [Criterion 4.1-3, SRD, [ID : SRD-ESH-01-001-02 ID#1519]] [Section 10.2.15,

BOD, [ID : DB-ENG-01-001 ID#13213], [ID : DB-ENG-01-001 ID#13213]] [Table 3A-7, PDSA - LAW Facility, [ID : WTP-PSAR-ESH-01-002-03 ID#13114], [ID : WTP-PSAR-ESH-01-002-03 ID#13115]].

Table 3-4 LCP and LFP Seismic Design Categories

Description	Vessel	Seismic Category	Reference
Anchorages (NPH interaction effects)	LCP-VSL-00001/2	SC-III/SC-IV	Table 3A-7 LAW PDSA
	LFP-VSL-00001/2/3/4	SC-III/SC-IV	

Basis Discussion: Equipment that is non-safety may be identified as having a potential for adverse interaction with safety equipment during a seismic event in accordance with 24590-WTP-GPG-ENG-033, Evaluation for Seismic Interaction Effects. Where a resolution strategy is selected to increase the seismic category of the source SSC to protect the safety (target) SSC, the resulting seismic category of the equipment may be greater than SC-IV. In those cases, the equipment design is verified to meet the higher seismic performance category such that the target SSC is protected.

Based on 24590-WTP-PSAR-ESH-01-002-01, Preliminary Documented Safety Analysis to Support Construction Authorization; General Information, seismic category IV piping are categorized as follows: i) non-safety piping and without an inventory of radioactive or hazardous material, but require seismic protection. ii) safety piping, but without seismic safety function. In accordance with 24590-WTP-GPG-M-036, Determining Quality Level and Seismic Category Classification of Sub-Components, Assemblies, Sub-Assemblies, and Parts, seismic category IV are SSCs that do not provide primary confinement of significant inventories of radioactive materials. Seismic category IV includes non-safety SSCs that required seismic protection per the Uniform Building Code (UBC).

As discussed in 24590-WTP-PSAR-ESH-01-002-01, Preliminary Documented Safety Analysis to Support Construction Authorization; General Information, Seismic Category V piping does not require any seismic consideration. Seismic Category V items include lockers, bicycles racks, desks, etc. per 24590-WTP-GPG-M-036, Determining Quality Level and Seismic Category Classification of Sub-Components, Assemblies, Sub-Assemblies, and Parts.

Verification: Verification is expected to be achieved through:

Verif. Method	Verif. By	Plan	Notes/Comments
I	ENG	Perform an evaluation of the LAW Facility LCP and LFP system to verify seismic categorization of equipment based on interaction effects per 24590-WTP-GPG-ENG-033 and devise a control strategy for all open interactions.	
A/T	ENG/ SUP	Analysis or testing performed on SSCs to demonstrate the ability to withstand the seismic loadings for their respective seismic categories to the extent necessary to prevent interactions.	Documented in an Equipment Seismic Qualification (ESQ) Review Form or supplier seismic design report.
I	ENG	Review design to verify conformance to the as-tested/as-analyzed configuration.	

3.4.2 Nuclear Safety, ALARA, Environmental, and Other Regulatory Requirements

The WTP dangerous waste permit requirements for leak detection on the LCP transfer line from the PT Facility are included in the TCP SDD. The LCP and LFP systems sump leak detection requirements are included in LAW

Facility design description and/or RLD SDD. WTP air permit requirements are not applicable to LCP and LFP systems.

3.4.2.1 Safety Designations

Requirement: SSCs shall be designated as safety SSCs in accordance with the table below: [Safety Criterion 4.1-2, 4.1-3, 4.4-1, SRD, [ID : SRD-ESH-01-001-02 ID#35], [ID : SRD-ESH-01-001-02 ID#1519], [ID : SRD-ESH-01-001-02 ID#53]] [Section 4.4.19, PDSA - LAW Facility, [ID : WTP-PSAR-ESH-01-002-03 ID#12176]].

Table 3-5 LCP and LFP Safety Designations

Equipment/ Component Description	Safety Function	Safety Designation	References
LFP-YV-1207 LFP-YV-1208 LFP-YV-2207 LFP-YV-2208 Melter Feed ADS Pump Water and Air Supply Isolation Valves	The upon receipt of an isolation signal the ADS pump interlocks must isolate the demineralized water and plant service air feeds to the ADS pumps within the affected melter feed vessel, which terminates feed to the melter.	SS	Section 4.4.19, PDSA - LAW Facility
LFP-LT-1145 LFP-LT-2145 MFV Level Instrumentation	The melter feed vessel level instrumentation must monitor melter feed vessel level and, if high level is detected, provide an actuation signal to the associated ADS pump interlocks.	SS	Section 4.4.19, PDSA - LAW Facility

Basis Discussion: Safety designation includes SSCs which support these components.

Verification: Verification is expected to be achieved through the following:

Verif. Method	Verif. By	Plan	Notes/Comments
I	ENG	Review of design for safety designations as identified in the Equipment Qualification Datasheet.	May be accomplished by EQP and/or DVR.

3.4.3 System Interface Requirements

Requirements associated with specific system interfaces are discussed in the subsequent requirement sections titled "System Interface Requirements." as applicable. The LCP and LFP system interfaces are listed in table below. (B.1, B.2, D.1, F.1, G.1, I.1).

Table 3-6 LCP and LFP System Interfaces

System Locator	System Name	Nature of Interface
ASX	Autosampling System	Receives waste samples from CRVs, MFPVs, and MFVs.
CHW	Chilled Water System	Provides chilled water used to cool LFP vessels.

Table 3-6 LCP and LFP System Interfaces

System Locator	System Name	Nature of Interface
DIW	Demineralized Water System	Supplies demineralized water to CRVs, MFPVs, and MFVs for washdowns and concentrate dilution, to LCP and LFP pumps for flushes, to LCP pumps for sealing, to LFP ADS pumps for flushes, and to LFP valve bulges for washdowns.
GFR	Glass Formers Reagent System	Supplies glass formers to MFPVs.
ISA	Instrument Service Air System	Supplies instrument air to LFP instruments and control valves.
LCP	LAW Concentrate Receipt	CRVs supply LAW concentrate to MFPVs.
LFP	LAW Melter Feed Process System	Receives feed concentrate from CRVs
LMP	LAW Melter Process System	Receive melter feed from MFVs.
LOP	LAW Primary Offgas System	Are interlocked to the ADS feed pumps to shut down associated melter when SBS indicates low level.
LVE	Low Voltage Electrical System	Supply power to LCP and LFP pumps and agitators.
LVP	LAW Secondary Offgas/Vessel Vent Process System	Vessel vent header receives vents from CRVs, MFPVs, and MFVs. Supplies vacuum for CRVs, MFPVs, and MFVs.
PCJ	Process Control System	Provides non-safety operational control and monitoring of the process instruments and equipment.
PPJ	Programmable Protection System	Monitors safety instruments and executes safety functions.
PSA	Plant Service Air System	Supplies plant air to ADS pumps. Provides air to CRVs, MFPVs, and MFVs for air purge.
RLD	Radioactive Liquid Waste Disposal System	Receives off-specification batches and washdowns from CRVs, MFPVs, and MFVs. Receives overflows from CRVs, MFPVs, and MFVs.
RWH	Radioactive Waste Handling System	Removal and packaging of equipment from the wet process cell is within the scope of the RWH.
TCP	Treated LAW Concentrate Storage Process	Supplies LAW concentrate to CRVs via the PT-PWD transfer lines.

3.4.4 Other Technical, Specialty, Operations and Maintenance Requirements

3.4.4.1 System Redundancy

Requirement: The system design shall incorporate redundant waste transfer capability necessary to achieve the throughput glass availability rate of 70%. The LCP and LFP design shall include cross-connections between the two melter trains that allow contents from vessels on one melter train to be transferred to the other melter train vessels. [Sections 6.3.2, 11.4.2, BOD, [ID : DB-ENG-01-001 ID#10348], [ID : DB-ENG-01-001 ID#10349], [ID : DB-ENG-01-001 ID#11434]] [Section 14.3, ORD, [ID : WTP-RPT-OP-01-001 ID#1480]] (C.1).

Basis Discussion: This requirement is decomposed from the BOD and ORD requirement to provide redundancy. The implementation of this cross-connection allows additional flexibility such that melter operations will continue even if one pump or feed line per melter zone becomes inoperable. In general, process systems and equipment that could fail during operations are designed for safe recovery, replacement, or redundancy. The need for redundancy has been evaluated in the basis of performing a failure modes, effects, and criticality analysis.

The LAW Facility is capable of producing 30 MTG/day at the facility design capacity. The LAW Facility is designed to process waste with an availability of 70 %. The facility design capacity is multiplied by the availability to derive the waste treatment capacity for the facility.

[ALARA]

Verification: Verification is expected to be achieved through the following:

Verif. Method	Verif. By	Plan	Notes/Comments
I	ENG	Review of the design to verify the capability exists to transfer LCP and LFP vessel contents between the two melter trains.	
I	ENG	Review design to verify an availability rate of 70% for the LCP and LFP systems.	

3.4.4.2 Startup Testing and Commissioning

Requirement: The system design shall include provisions, as necessary, to support startup and commissioning testing as identified in Appendix A. [Sections 11.4.7, 11.5.1, BOD, [ID : DB-ENG-01-001 ID#11448], [ID : DB-ENG-01-001 ID#11459]] [Section 9.1, ORD, [ID : WTP-RPT-OP-01-001 ID#1173]].

Basis Discussion: Additional nozzles, branch lines, removable spools or other provisions that are needed to support identified testing are to be provided, as jointly determined by the design agency, startup, and commissioning during the design development and review process, with consideration given to the tests and demonstration activities required for requirement verifications specified in Appendix A. This may include, but is not limited to, provisions to support the introduction or removal of fluids, gases, reagents or simulants; or the availability of special test ports, sampling ports, or temporary instruments or instrument lines.

Verification: Verification is expected to be achieved through the following:

Verif. Method	Verif. By	Plan	Notes/Comments
A	ENG	Analysis of the LCP and LFP systems to determine the provisions needed to support tests/demonstrations to be performed during startup and commissioning.	May be documented in an assessment/evaluation report.
I	ENG	Review design to verify requirement is met based on established tests/demonstrations to be performed during startup and commissioning.	

3.4.4.3 Bulge Design

Requirement: Equipment requiring maintenance such as process isolation valves and pumps that comes into contact with the radioactive process fluids shall be located in stainless steel bulges. [Section 10.4 ORD, [ID : WTP-RPT-OP-01-001 ID#1238]].

Basis Discussion: The bulges are an extension of the process cells which provides a containment boundary minimizing any release radioactive process fluids (gaseous and liquid).

[ALARA]

Verification: Verification is expected to be achieved through:

Verif. Method	Verif. By	Plan	Notes/Comments
I	ENG	Verify that stainless steel bulges are provided for pumps/isolation valves that comes into contact with the radioactive process fluids	

3.4.4.4 Decontamination

Requirement: The LAW Facility LCP and LFP system equipment subject to decontamination shall be designed to withstand this process without any reduction of functionality through degradation of the electrical, mechanical, or any other components involved. [Section 9.1, ORD, [ID : WTP-RPT-OP-01-001 ID#1171]].

Basis Discussion: Equipment operating in a contaminated environment is monitored and, if necessary, decontaminated before maintenance. The specifications must convey that the equipment design accounts for these processes. [ALARA]

Verification: Verification is expected to be achieved through the following:

Verif. Method	Verif. By	Plan	Notes/Comments
I	ENG	Review the LCP and LFP design to verify equipment/components listed above can withstand decontamination without degradation or reduction in equipment functionality	

3.4.4.5 Process Valve Actuator Speed Limitation

Requirement: Design of automatic valve operator closure time shall be sufficiently slow to prevent damage from water hammer. [Section 14.4, ORD, [ID : WTP-RPT-OP-01-001 ID#1489]] [Section 11.7.4, BOD, [ID : DB-ENG-01-001 ID#11532]].

Basis Discussion: This requirement applies for valves where "water hammer" can be a phenomenon. Valve stroke time is adjustable after installation. The actual stroke time is part of valve specifications and/or datasheets.

Verification: Verification is expected to be achieved through the following:

Verif. Method	Verif. By	Plan	Notes/Comments
A	ENG	Perform an analysis to determine which automatic valves are at risk of water hammer.	
I	ENG	Verify the design specifies slow closing actuators for automatic valves at risk of water hammer.	Evaluate with startup (SU) and commissioning (COM) and document in an evaluation/assessment.

3.4.4.6 Flush Mounted Instrumentation

Requirement: Instrumentation installed in piping with solids shall be flush-mounted. [Section 11.16, ORD, [ID : WTP-RPT-OP-01-001 ID#1373]].

Basis Discussion: Flush mounting prevents solids from plugging and the instrumentation from providing erroneous indications as it does not create an obstruction of flow where solids could accumulate. For example, transducers installed in a short pipe stub would fill with solids.
[ALARA]

Verification: Verification is expected to be achieved through the following:

Verif. Method	Verif. By	Plan	Notes/Comments
I	ENG	Review design to verify instrumentation installed in LCP/LFP process piping is flush mounted.	

3.4.4.7 Cathodic Protection

Requirement: Underground waste transfer lines shall be cathodically protected. [Section 8.9, BOD, [ID : DB-ENG-01-001 ID#10889]].

Basis Discussion: None

Verification: Verification is expected to be achieved through the following:

Verif. Method	Verif. By	Plan	Notes/Comments
I	ENG	Review design to verify that LCP/LFP underground waste transfer lines are cathodically protected.	

3.5 Vessel Requirements

3.5.1 Mission and Functional / Performance Requirements (Including States/Modes)

3.5.1.1 Vessel Design and Operating Conditions

3.5.1.1.1 Codes and Standards

Requirement: The LCP and LFP vessels shall be designed to American Society of Mechanical Engineers (ASME) *Boiler and Pressure Vessel Code*, Section VIII, Division 1 [Sections 11.7.1, 16.4.2.4, BOD, [ID : DB-ENG-01-001 ID#11510], [ID : DB-ENG-01-001 ID#12812]].

Basis Discussion: None.

Verification: Verification is expected to be achieved through the following:

Verif. Method	Verif. By	Plan	Notes/Comments
A	ENG	Analysis of the LFP vessel design prepared in accordance with ASME Section VIII, Division 1.	
I	ENG	Review of design to verify conformance to the results of the analysis.	
I	ENG	Review of supplier provided design and quality records.	Documented in an assessment/evaluation.

3.5.2 Nuclear Safety, ALARA, Environmental, and Other Regulatory Requirements

3.5.3 System Interface Requirements

3.5.3.1 PT Facility TCP - Receive LAW Concentrate in LCP CRV

Requirement: The CRVs shall interface with the PT Facility TCP transfer line to receive LAW concentrate. [Section 6.1.2, BOD, [ID : DB-ENG-01-001 ID#10311]].

Basis Discussion: The LCP transfer line provides the interface between the PT Facility and LAW Facility to support the glass throughput production. Minimum transfer rate and line velocity values to support glass production and to preclude line plugging will be provided in the PT Facility TCP SDD.

Verification: Verification is expected to be achieved through the following:

Verif. Method	Verif. By	Plan	Notes/Comments
I	ENG	Review design to verify the LCP transfer line provides a connection between the PT Facility TCP and the LAW Facility CRVs.	

3.5.3.2 Demineralized Water System - Vessel Wash Water and Decontamination

Requirement: The LCP and LFP vessels shall interface with the DIW system to receive DIW, with or without nitric acid, to wash and decontaminate the vessels and internals. [Sections 5.2, 14.1, 14.3, 20.0, ORD, [ID : WTP-RPT-OP-01-001 ID#1047], [ID : WTP-RPT-OP-01-001 ID#1467], [ID : WTP-RPT-OP-01-001 ID#1466], [ID : WTP-RPT-OP-01-001 ID#1479], [ID : WTP-RPT-OP-01-001 ID#1717], [ID : WTP-RPT-OP-01-001 ID#1718], [ID : WTP-RPT-OP-01-001 ID#1719], [ID : WTP-RPT-OP-01-001 ID#1720], [ID : WTP-RPT-OP-01-001 ID#1721]] (E.2).

Basis Discussion: None.

[ALARA]

Verification: Verification is expected to be achieved through the following:

Verif. Method	Verif. By	Plan	Notes/Comments
I	ENG	Review design to verify the interface between the DIW system with the LCP and LFP vessels to receive DIW for washing and decontamination.	

3.5.3.3 Interface with Autosampling System

Requirement: LCP and LFP systems shall provide interfaces with the ASX system to sample contents of the CRV, MFPV, and MFV. [Section 6.7.1, BOD, [ID : DB-ENG-01-001 ID#10417]] [Section 14.14, ORD, [ID : WTP-RPT-OP-01-001 ID#1545]] (A.2, A.3, A.6, A.8, A.9, A.13).

Basis Discussion: The WTP operator will confirm the waste composition by sampling and analyzing the waste in the CRVs, MFPVs, and MFVs. To ensure no segregation of the waste components occurs while in storage, agitation within the LAW feed receipt vessel systems is provided.

Verification: Verification is expected to be achieved through the following:

Verif. Method	Verif. By	Plan	Notes/Comments
I	ENG	Review design to verify sampling connections are provided between LFP and LCP vessels with the ASX system.	

3.5.3.4 Interface with Glass Former Reagent System

Requirement: The LFP system shall interface with the GFR system to receive glass formers into the MFPV. [Section 6.1.2, BOD, [ID : DB-ENG-01-001 ID#10311]] (A.7).

Basis Discussion: Proper proportions of various glass formers are added to the LAW concentrate, and mixed to prepare LAW feed material.

Verification: Verification is expected to be achieved through the following:

Verif. Method	Verif. By	Plan	Notes/Comments
I	ENG	Review of design to verify the MFPV interfaces with GFR to receive the glass formers.	

3.5.3.5 Interface with LAW RLD System

Requirement: LAW RLD vessels shall be capable of receiving effluent from the LCP and LFP vessels. [Sections 14.10.1.1, 14.10.1.2, BOD, [ID : DB-ENG-01-001 ID#12149], [ID : DB-ENG-01-001 ID#12150], [ID : DB-ENG-01-001 ID#12151], [ID : DB-ENG-01-001 ID#12156], [ID : DB-ENG-01-001 ID#12157]] (B.1, B.2).

Basis Discussion: None

Verification: Verification is expected to be achieved through the following:

Verif. Method	Verif. By	Plan	Notes/Comments
I	ENG	Review design to verify a connection between the LCP and LFP systems with the RLD.	

3.5.4 Other Technical, Specialty, Operations and Maintenance Requirements

3.5.4.1 Vessel Washing

Requirement: The CRV, MFPV, and MFV shall be designed with internal spray mechanisms to wash the vessel walls and internals. [Sections 11.7.4, 16.4.8, BOD, [ID : DB-ENG-01-001 ID#11534], [ID : DB-ENG-01-001 ID#12861]] [Sections 14.2, 20.0, ORD, [ID : WTP-RPT-OP-01-001 ID#1475], [ID : WTP-RPT-OP-01-001 ID#1730], [ID : WTP-RPT-OP-01-001 ID#1717], [ID : WTP-RPT-OP-01-001 ID#1718], [ID : WTP-RPT-OP-01-001 ID#1719], [ID : WTP-RPT-OP-01-001 ID#1720], [ID : WTP-RPT-OP-01-001 ID#1721]] (B.2).

Basis Discussion: The internal spray mechanisms used to wash the LCP and LFP vessels help to facilitate the removal of contamination and prevent the buildup of solids on the vessel walls. The LCP and LFP vessels are to be cleaned prior to removal for decommissioning and decontamination or maintenance/replacement activities.

[ALARA]

Verification: Verification is expected to be achieved through the following:

Verif. Method	Verif. By	Plan	Notes/Comments
I	ENG	Review of design for incorporation of internal spray mechanisms.	

3.5.4.2 Agitation

3.5.4.2.1 General Agitation/Mixing

Requirement: The LCP and LFP system shall be capable of mixing the vessel contents during the process of receiving, sampling, storing, and transferring waste. [Section 6.7.3, BOD, [ID : DB-ENG-01-001 ID#10424]] [Section 14.14, ORD, [ID : WTP-RPT-OP-01-001 ID#1545]] (A.2, A.6, A.8, A.12).

Basis Discussion: Agitation of the LCP and LFP vessels is also required to collect a representative sample of vessel contents. Mixing is accomplished through mechanical agitator.

Verification: Verification is expected to be achieved through the following:

Verif. Method	Verif. By	Plan	Notes/Comments
I	ENG	Verify that agitation capability is incorporated into the design and align with mixing requirements.	

3.5.4.3 Vessel Ventilation

Requirement: The ancillary equipment and vessels shall be designed to prevent the accumulation of hydrogen gas levels above the lower explosive limit. [Section III.10.H.1.a.xxviii, Dangerous Waste Portion of RCRA Permit, [ID : WA7890008967 WTP ID#500]] (G.1, H.1).

Basis Discussion:

Section 3.3.3.1 of Preliminary Documented Safety Analysis to Support Construction Authorization; LAW Facility Specific Information (LAW – PDSA) states:

> "Accumulation of flammable gasses such as hydrogen in the vapor space of the concentrate receipt vessels or melter feed vessels can occur as a result of thermolysis (e.g., CSD-LLCP/N0005 and CSD-LLFP/N0003), resulting in an explosion if ignited."

Verification: Verification is expected to be achieved through the following:

Verif. Method	Verif. By	Plan	Notes/Comments
A	ENG	Perform an analysis to determine generation rate of hydrogen for LFP and LCP vessels and ensure that the design maintains the hydrogen levels below the LEL.	May be documented in an assessment/evaluation report.
I	ENG	Review design to verify conformance with the analysis.	

3.6 Piping Requirements

3.6.1 Mission and Functional / Performance Requirements (Including States/Modes)

3.6.1.1 Piping Design

3.6.1.1.1 Codes and Standards

Requirement: The LCP and LFP piping design, fabrication, inspection, and testing of the piping shall be in accordance with ASME B31.3, *Process Piping,* 1996 edition, as tailored in Appendix C, Section C.26, of the Safety Requirements Document. . [Sections 11.7.6, 11.7.1, BOD, [ID : DB-ENG-01-001 ID#13128, [ID : DB-ENG-01-001 ID#13129], [ID : DB-ENG-01-001 ID#13130], [ID : DB-ENG-01-001 ID#11516]] [Appendix C, Section C.26, SRD, [ID : SRD-ESH-01-001-02 ID#666]].

Basis Discussion:

Although the LCP and LFP systems have non-safety portions of piping, ASME B31.3, *Process Piping*, 1996 edition, as tailored in Appendix C, Section C.26, of the Safety Requirements Document is used in all B31.3 pipe for design consistency.

The pipe, flanges, and valves are in accordance with the long stock code descriptions listed in applicable pipe class specifications used for the LCP and LFP. Each pipe class sheet lists the design code used for the specific pipe class specification. The pipe, fittings, flanges, and valves used are in accordance with the design code listed on the specific pipe class specification. There are specific numbered in-line components provided by other engineering disciplines that are in accordance with the design code requirements listed in the applicable engineering specification for the specific component.

Verification: Verification is expected to be achieved through:

Verif. Method	Verif. By	Plan	Notes/Comments
A	ENG	Perform an analysis of the piping design in accordance with ASME B31.3, 1996 edition, as tailored in Appendix C, Section C.26, of the SRD.	May be documented in an assessment/evaluation report.
I	ENG	Review of the design to verify conformance to the analysis results.	Document in an evaluation/assessment that may be performed using a sampling basis or documented in DVR or RVM.

3.6.1.1.2 Siphon Prevention

Requirement: The piping design shall include necessary means to prevent siphoning or backflow. [Section 5.1.2, BOD, [ID : DB-ENG-01-001 ID#10259]] [Section 7.1, ORD, [ID : WTP-RPT-OP-01-001 ID#1102], [ID : WTP-RPT-OP-01-001 ID#1100]].

Basis Discussion: Systems containing hazardous material will be provided with suitable isolation provisions to prevent diffusion, backflow, or other methods of leakage of the contents to areas where the material is not intended.

[ALARA]

Verification: Verification is expected to be achieved through the following:

Verif. Method	Verif. By	Plan	Notes/Comments
I	ENG	Review the piping design for conformance to this requirement.	

3.6.1.1.3 Double-Walled (Coaxial) Piping

Requirement: The LAW concentrate transfer piping from the PT Facility to the LAW Facility shall be an underground, double-walled (coaxial) pipeline. [Section 11.2.3, BOD, [ID : DB-ENG-01-001 ID#11380]].

Basis Discussion: To provide a dual containment boundary for transferring the LAW concentrate between the PT Facility and LAW Facility. Radioactive liquid transfer lines are double-encased to minimize the potential for release of contamination due to the breach of a process line.

This requirement only applies to LCP piping.

[ALARA]

Verification: Verification is expected to be achieved through the following:

Verif. Method	Verif. By	Plan	Notes/Comments
I	ENG	Review the piping design to verify the piping from the PT Facility to the LAW Facility is double-walled.	
I	ENG	Review installation records to verify the piping from the PT Facility to the LAW Facility is double walled.	

3.6.1.1.4 Testing of Co-Axial Pipe

Requirement: Co-axial lines (pipe-in-pipe) shall have the provision to pneumatically test both primary and secondary lines for leakage. [Section 14.3, ORD, [ID : WTP-RPT-OP-01-001 ID#1482]].

Basis Discussion: This requirement only applies to LCP and LFP piping.

Verification: Verification is expected to be achieved through the following:

Verif. Method	Verif. By	Plan	Notes/Comments
I	ENG	Review piping design to verify that co-axial pipes have the provision for pneumatically testing primary and secondary lines for leakage.	

3.6.1.1.5 Secondary Containment in Piping

Requirement: LCP and LFP piping that manages dangerous waste shall be designed with secondary containment. [Section 14.10.1.3, BOD, [ID : DB-ENG-01-001 ID#12173]].

Basis Discussion: LCP and LFP piping design (fittings, flanges, valves, pumps) used to control the flow of dangerous waste should include secondary containment. LCP and LFP piping design should provide a dual containment boundary such as double wall (co-axial) pipe, bulge for valves and pumps to minimize any release of dangerous waste due to leak. Exception such as daily visual inspection could be performed for the aboveground piping in lieu of using double wall piping or other secondary containment in accordance with WAC 173-303-640[4][f]. Refer to 24590-LAW-RPT-ENV-09-001, *Dangerous Waste Permit Secondary Containment*

Requirements for LAW Facility, for detailed information about secondary containment in piping system.

[ALARA]

Verification: Verification is expected to be achieved through the following:

Verif. Method	Verif. By	Plan	Notes/Comments
I	ENG	Review design to verify that secondary containment is provided.	

3.6.1.1.6 Piping Utility Connections

Requirement: The design shall include engineered devices such as air gaps or adequate backflow preventers to utility connections. [Section 7.1, ORD, [ID : WTP-RPT-OP-01-001 ID#1100]].

Basis Discussion: Prevents cross contamination.

[ALARA]

Verification: Verification is expected to be achieved through the following:

Verif. Metho d	Verif. By	Plan	Notes/Comments
I	ENG	Verify the utility connections will not allow cross contamination.	Document in an evaluation and assessment report.

3.6.2 Nuclear Safety, ALARA, Environmental, and Other Regulatory Requirements

3.6.2.1 Prevention of Cross Contamination

Requirement: The LCP and LFP systems shall include provisions to isolate contaminated process streams from non-contaminated systems. [Section 7.1, ORD, [ID : WTP-RPT-OP-01-001 ID#1101]] [Section 5.1.2, BOD, [ID : DB-ENG-01-001 ID#10259]].

Basis Discussion: None.

[ALARA]

Verification: Verification is expected to be achieved through the following:

Verif. Method	Verif. By	Plan	Notes/Comments
I	ENG	Review the piping design to verify isolation capabilities.	

3.6.3 System Interface Requirements

3.6.3.1 DIW - Pipe Flushing Interfaces

Requirement: The piping design shall interface with the DIW to provide flush water into the transfer pipe and overflow lines. [Section 6.2.1, BOD, [ID : DB-ENG-01-001 ID#10322]] [Section 14.3, ORD, [ID : WTP-RPT-OP-01-001 ID#1478], [ID : WTP-RPT-OP-01-001 ID#1479]] (A.3.1, A.4.1, A.8.1, E.1, E.3).

Basis Discussion: The transfer lines are flushed to remove waste from the lines to prevent plugging and the accumulation of waste that could generate hydrogen. The minimum flush velocity of 6 fps was determined in CCN 241253, *Response to Defense Nuclear Facilities Safety Board (DNFSB) Staff Issue Report Regarding Plugging of Process Lines, Pretreatment Facility, Waste Treatment Plant, Hanford Site* based on the test data.

Verification: Verification is expected to be achieved through the following:

Verif. Method	Verif. By	Plan	Notes/Comments
I	ENG	Review design to verify connection to DIW system.	

3.6.4 Other Technical, Specialty, Operations and Maintenance Requirements

3.6.4.1 Piping Drainage and Slope

Requirement: Piping shall be fully drainable and flushable with high point vents and low point drains and without traps or seals unless traps or seals will allow operator action for drainage. [Sections 7.1, 14.3, 20.0, ORD, [ID : WTP-RPT-OP-01-001 ID#1103], [ID : WTP-RPT-OP-01-001 ID#1477], [ID : WTP-RPT-OP-01-001 ID#1478], [ID : WTP-RPT-OP-01-001 ID#1725]].

Basis Discussion: Drainage and flushing capabilities are important for maintenance and decontamination activities.

For additional details on pipe sloping, see 24590-WTP-GPG-M-027, *Recommended Slopes for Piping System* and 24590-WTP-M6-50-00008, *P&ID Symbols and Legend Sheet 8 of 8*.

[ALARA]

Verification: Verification is expected to be achieved through the following:

Verif. Method	Verif. By	Plan	Notes/Comments
I	ENG	Review the LCP and LFP fluid piping design (i.e., P&IDs) to confirm piping is designed to drain and flush.	May be documented in an assessment/evaluation.
I	COM	Document inspection of installed lines to confirm draining and slope requirement.	

3.7 Pump Requirements

3.7.1 Mission and Functional / Performance Requirements (Including States/Modes)

See Sections 3.4.1.1 and 3.4.1.2.

3.7.1.1 Melter Feed (Air Displacement Slurry) Pumps

Requirement: The MFVs shall use ADS pumps for transferring melter feed to the melters. [Sections 11.7.4, 15.3.3, BOD, [ID : DB-ENG-01-001 ID#11530], [ID : DB-ENG-01-001 ID#12700]] (G.2).

Basis Discussion: The ADS pumps provide a pulsed transfer rate of LAW supply for glass production. The ADS pumps use air as the motive force to push slurry into the melter.

Verification: Verification is expected to be achieved through the following:

Verif. Method	Verif. By	Plan	Notes/Comments
I	ENG	Review of the design for incorporation of ADS pumps from the MFVs to the melters.	

3.7.2 Nuclear Safety, ALARA, Environmental, and Other Regulatory Requirements

3.7.2.1 Sample/Transfer Pumps

None.

3.7.2.2 Melter Feed (Air Displacement Slurry) Pumps

None.

3.7.3 System Interface Requirements

3.7.3.1 Sample/Transfer Pumps

3.7.3.1.1 Demineralized Water - Pump Priming

Requirement: The sample/transfer pumps shall interface with the DIW system to receive water for priming. (E.2).

Basis Discussion: The MFPV sample/transfer pumps use DIW for priming to clear the pump and to initiate pumping without waste transfer until pump reaches operating capacity.

Verification: Verification is expected to be achieved through the following:

Verif. Method	Verif. By	Plan	Notes/Comments
I	ENG	Review design and verify pumps are able to receive DIW water for priming.	

3.7.3.2 Melter Feed (Air Displacement Slurry) Pumps

3.7.3.2.1 Plant Service Air - Air Supply

Requirement: The ADS pumps shall interface with the PSA system to receive air supply to provide the motive force for operating the ADS pumps. (G.2).

Basis Discussion: The ADS pump motive force is compressed air, which acts to push the slurry using a pulsed flow.

Verification: Verification is expected to be achieved through the following:

Verif. Method	Verif. By	Plan	Notes/Comments
I	ENG	Review design to confirm ADS pumps are able to receive PSA.	

3.7.4 Other Technical, Specialty, Operations and Maintenance Requirements

None.

3.8 Monitoring and Controls Requirements

3.8.1 Mission and Functional / Performance Requirements (Including States/Modes)

3.8.1.1 Non-Safety Level Detection

Requirement: The LCP and LFP system shall have the capability to determine volume balances during transfers. [Section 7.1, ORD, [ID : WTP-RPT-OP-01-001 ID#1110]] (J.1.1).

Basis Discussion: None.,

Verification: Verification is expected to be achieved through the following:

Verif. Method	Verif. By	Plan	Notes/Comments
I	ENG	Review design to confirm capability to determine volume balances during transfers.	

3.8.2 Nuclear Safety, ALARA, Environmental, and Other Regulatory Requirements

3.8.2.1 Safety Class Interlocks

None.

3.8.2.2 Safety Significant Interlocks

The system design shall include the following SS interlocks:

- ADS Pump interlocks

All SS interlocks are performed via the PPJ. System instruments provide inputs to the PPJ. The PPJ evaluates these inputs and when a pre-determined condition is detected, the PPJ actuates final elements to place them into a known safe state.

3.8.2.2.1 Terminate Melter Feed - Melter Plenum High Pressure (Reduced Vacuum)

Requirement: Upon receipt of a high pressure (reduced vacuum) signal from the LMP melter plenum, melter feed shall be terminated to the affected melter. The method of feed termination is achieved by simultaneously isolating:

1. Air supply to the affected melter feed ADS pumps.
2. Water supply to the affected melter feed ADS pumps.

[Section 4.4.8.3, PDSA – LAW Facility, [ID : WTP-PSAR-ESH-01-002-03 ID#11950]] (J.2.1).

Basis Discussion: Terminating transfer to the melters when a high pressure setpoint is reached in the melter plenum helps prevent overpressurizing the LAW melter.

Section 4.4.8.5 of 24590-WTP-PSAR-ESH-01-002-03, *Preliminary Documented Safety Analysis to Support Construction Authorization; LAW Facility* states the following:
"Unlike most other requirements involving the termination of melter feed, a delay in the isolation of demineralized water to the ADS pumps is not allowed. This is because increasing melter pressure represents an immediate challenge to melter confinement, as opposed to many of the other melter feed termination requirements where conditions cause a trip, but a loss of melter depression is not an immediate risk."

[ALARA]

Verification: Verification is expected to be achieved through the following:

Verif. Method	Verif. By	Plan	Notes/Comments
I	ENG	Review the design for incorporation of the system specific interlock physical components.	Additional verification criteria for this interlock are discussed in the LMP SDD.

3.8.2.2.2 Terminate Melter Feed - Melter Offgas Exhauster Shaft Seal Backup Air Low Pressure

Requirement: Upon receipt of low pressure signal from the backup bottled air supply to the shaft seal on any of the three offgas exhausters in the LVP, feed to both melters shall be terminated. The method of feed termination is achieved by:

1. First isolating air to the melter feed ADS pumps of both melters.
2. Followed by the isolation of water (after line flushes, as necessary) to the melter feed ADS pumps of both melters.

[Sections 4.4.43.1, 4.4.43.3, PDSA - LAW Facility, [ID : WTP-PSAR-ESH-01-002-03 ID#12612], [ID : WTP-PSAR-ESH-01-002-03 ID#12616]] (J.2.1).

Basis Discussion: Section 4.4.43.5 of 24590-WTP-PSAR-ESH-01-002-03, *Preliminary Documented Safety Analysis to Support Construction Authorization; LAW Facility* states the following:
"When the pressure on the backup purge air supply to any exhauster drops to the point that only 2 hr of purge air remains, melter feed is terminated. This will ensure that before any of the exhauster shaft seals fail, the cold cap will be reduced sufficiently that releases into the exhauster rooms will be well below the exposure standards."

[ALARA]

Verification: Verification is expected to be achieved through the following:

Verif. Method	Verif. By	Plan	Notes/Comments
I	ENG	Review the design for incorporation of the system specific interlock physical components.	Additional verification criteria for this interlock are discussed in the LOP/LVP SDD.

3.8.2.2.3 Terminate Melter Feed - MFV High Liquid Level

Requirement: Upon detection of a high liquid level (**setpoint TBD**) in the MFV, melter feed from the affected MFV shall be terminated. The method of feed termination is achieved by simultaneously isolating:

1. Air supply to the melter feed ADS pumps of the affected MFV.
2. Water supply to the melter feed ADS pumps of the affected MFV.

[Sections 4.4.19.1, 4.4.19.2, 4.4.19.3, 4.4.19.5 PDSA - LAW Facility, [ID : WTP-PSAR-ESH-01-002-03 ID#12176], [ID : WTP-PSAR-ESH-01-002-03 ID#12177], [ID : WTP-PSAR-ESH-01-002-03 ID#12179], [ID : WTP-PSAR-ESH-01-002-03 ID#12181], [ID : WTP-PSAR-ESH-01-002-03 ID#12193], [ID : WTP-PSAR-ESH-01-002-03 ID#12194]] (J.2.1).

Basis Discussion: Section 4.4.19.2 of 24590-WTP-PSAR-ESH-01-002-03, *Preliminary Documented Safety Analysis to Support Construction Authorization; LAW Facility* states the following:
"ADS pump operations include alternating cycles of melter feed and air through the feed lines to the melter, and periodic flushing of the ADS pump with demineralized water. These activities have been identified as having a potential to lead to a situation where a sustained siphon of feed material can be fed to the melter, even though the ADS pump is no longer operating, provided melter feed vessel liquid levels are high enough. By shutting down ADS pump operations before liquid levels in the melter feed vessel are high enough to support a sustained siphon, the set of conditions necessary to initiate a siphon are prevented from occurring."

Section 4.4.19.3 of 24590-WTP-PSAR-ESH-01-002-03, *Preliminary Documented Safety Analysis to Support Construction Authorization; LAW Facility* states the following:
"Unlike most other requirements involving the termination of melter feed, a delay in the isolation of demineralized water to the ADS pumps is not allowed. This is based on the undesirability of the amount of water that could be added to the melter feed vessel during this period, and the fact that flushing activities would pressurize the line of concern, further extending the time required for a siphon to break."

Verification: Verification is expected to be achieved through the following:

Verif. Method	Verif. By	Plan	Notes/Comments
I	ENG	Review the design for incorporation of the interlock.	Documented in DVR.
T	SU/ COM	Perform a test to verify the capability to terminate transfer from MFV to the melter, using the PPJ, when high liquid level **(setpoint TBD)** is reached in the MFV.	The PPJ system is required to be operational to perform this test.

3.8.2.2.4 Terminate Melter Feed - Melter Lid Cavity Cooling Water High Temperature

Requirement: Upon detection of high cooling water temperature in the melter lid cavity, feed to both melters shall be terminated. The method of feed termination is achieved by:

1. First isolating air to the melter feed ADS pumps of both melters.
2. Followed by the isolation of water (after line flushes, as necessary) to the melter feed ADS pumps of both melters.

[Sections 4.4.27.1, 4.4.27.3, PDSA - LAW Facility, [ID : WTP-PSAR-ESH-01-002-03 ID#12321], [ID : WTP-PSAR-ESH-01-002-03 ID#12325]] (J.2.1).

Basis Discussion: Section 4.4.27.5 of 24590-WTP-PSAR-ESH-01-002-03, *Preliminary Documented Safety Analysis to Support Construction Authorization; LAW Facility* states the following:
"Feed is terminated to both melters, so that both melter cold caps are gone in the event that continuing temperature rises cause plate failure. This will ensure that there is no danger from an upset in one melter (e.g., excessive flow area into the melter beyond the capability of the exhausters to maintain depression) affecting the other melter in a way that could result in a release of offgas (e.g., losing depression due to preferential flow from the failed melter).

Terminating the air to the melter feed ADS pumps terminates melter feed. However, allowing unlimited water additions to the melter once the primary melter feed has been stopped can extend cold cap durations. Therefore,

water to the ADS pumps is also isolated. A timed delay in water isolation is allowed for flushing activities, with related analytical limits and setpoints accounting for this time delay. Based on the results presented in 24590-LAW-RPT-ENS-10-001, allowing a short delay in water isolation (on the order of 5-10 min) does not change that the NOx concentrations 2 hr after feed termination will be well below TEEL-3 values."

Verification: Verification is expected to be achieved through the following:

Verif. Method	Verif. By	Plan	Notes/Comments
I	ENG	Review the design for incorporation of the system specific interlock physical components.	Additional verification criteria for this interlock are discussed in the LMP SDD.

3.8.2.2.5 Terminate Melter Feed - SBS Low or High Liquid Level

Requirement: Upon detection of a low or high liquid level in the SBS, melter feed shall be terminated to the associated melter. The method of feed termination is achieved by:

1. First isolating air to the melter feed ADS pumps of the associated melter.
2. Followed by the isolation of water (after line flushes, as necessary) to the melter feed ADS pump of the associated melter.

[Section 4.4.5.3, PDSA - LAW Facility, [ID : WTP-PSAR-ESH-01-002-03 ID#11879]] (J.2.1).

Basis Discussion: Section 4.4.5.1 of 24590-WTP-PSAR-ESH-01-002-03, *Preliminary Documented Safety Analysis to Support Construction Authorization; LAW Facility* states the following:

"An interlock must stop feed to the associated melter if a high level is detected in the SBS. This control protects against continued level increases in the SBS as a result of condensing water vapor from the melter feed."

Feed is stopped to prevent a blocked offgas flow path to the stack.

Section 4.4.5.1 of 24590-WTP-PSAR-ESH-01-002-03, *Preliminary Documented Safety Analysis to Support Construction Authorization; LAW Facility* states the following:

"An interlock must stop feed to the associated melter if a low level is detected in the SBS. This control ensures NOx production is halted in the associated melters as the liquid level drops in the affected SBS. If liquid level continues to drop in the affected SBS due to evaporation, the NOx hazard from the associated melter is eliminated before overheat damage to the offgas system can occur."

Verification: Verification is expected to be achieved through the following:

Verif. Method	Verif. By	Plan	Notes/Comments
I	ENG	Review the design for incorporation of the system specific interlock physical components.	Additional verification criteria for this interlock are discussed in the LOP/LVP SDD.

3.8.2.2.6 Terminate Melter Feed - LVP HEPA Filter High Differential Pressure

Requirement: Upon detection of high differential pressure across both banks of HEPA filters, feed to both melters shall be terminated. The method of feed termination is achieved by:

1. First isolating air to the melter feed ADS pumps of both melters.

2. Followed by the isolation of water (after line flushes, as necessary) to the melter feed ADS pumps of both melters.

[Section 4.4.3.3, PDSA - LAW Facility, [ID : WTP-PSAR-ESH-01-002-03 ID#11783]] (J.2.1).

Basis Discussion: Section 4.4.3.5 of 24590-WTP-PSAR-ESH-01-002-03, *Preliminary Documented Safety Analysis to Support Construction Authorization; LAW Facility* states the following:
"To prevent blockage of the melter offgas system and to prevent overpressurization of the melter plenum which would result in a gas release to the operating environment, a HEPA filter differential pressure safety instrumented system performs a number of actions."

Section 4.4.3.5 of 24590-WTP-PSAR-ESH-01-002-03, *Preliminary Documented Safety Analysis to Support Construction Authorization; LAW Facility* states the following:
"A timed delay in water isolation is allowed for flushing activities with related analytical limits and setpoints accounting for this time delay. Based on the results presented in 24590-LAW-RPT-ENS-10-001, allowing a short delay in water isolation (on the order of 5-10 min) does not change that the NOx concentrations 2 hr after feed termination will be well below TEEL-3 values. The setpoint will be selected such that increasing differential pressure across the HEPA filters will not result in the loss of melter depression in less than 2 hr."

[ALARA]

Verification: Verification is expected to be achieved through the following:

Verif. Method	Verif. By	Plan	Notes/Comments
I	ENG	Review the design for incorporation of the system specific interlock physical components.	Additional verification criteria for this interlock are discussed in the LOP/LVP SDD.

3.8.2.2.7 Terminate Melter Feed – Mercury Mitigation Skid (Carbon Bed Adsorbers) High Differential COx

Requirement: Upon detection of high differential CO or CO_2 (COx) across the mercury mitigation skid (carbon bed adsorbers), feed to both melters shall be terminated. The method of feed termination is by:

1. First isolating air to the melter feed ADS pumps of both melters.
2. Followed by the isolation of water (after line flushes, as necessary) to the melter feed ADS pumps of both melters.

[Section 4.4.3.3, PDSA - LAW Facility, [ID : WTP-PSAR-ESH-01-002-03 ID#11785]] (J.2.1).

Basis Discussion: A high differential COx across the carbon bed adsorbers is indicative of a carbon bed fire which may lead to a melter offgas release.

Verification: Verification is expected to be achieved through the following:

Verif. Method	Verif. By	Plan	Notes/Comments
I	ENG	Review the design for incorporation of the system specific interlock physical components.	Additional verification criteria for this interlock are discussed in the LOP/LVP SDD.

3.8.2.2.8 Terminate Melter Feed - Caustic Scrubber Recirculation Line Low Flow

Requirement: Upon detection of low flow, in the caustic scrubber recirculation line, melter feed shall be terminated to the both melters. The method of feed termination is achieved by:

1. First isolating air to the melter feed ADS pumps of both melters.
2. Followed by the isolation of water (after line flushes, as necessary) to the melter feed ADS pumps of both melters.

[Sections 4.4.9.1, 4.4.9.3, 4.4.9.5, PDSA - LAW Facility, [ID : WTP-PSAR-ESH-01-002-03 ID#11969], [ID : WTP-PSAR-ESH-01-002-03 ID#11973], [ID : WTP-PSAR-ESH-01-002-03 ID#11985]] (J.2.1).

Basis Discussion: Section 4.4.9.1 of 24590-WTP-PSAR-ESH-01-002-03, *Preliminary Documented Safety Analysis to Support Construction Authorization; LAW Facility* states the following:
"This safety function ensures that on detection of low flow in the caustic scrubber recirculation line (corresponding to a loss of capability to maintain required loop seal liquid level), melter feed will be terminated and the NO_x hazard eliminated (due to subsequent cold cap burnoff) from the melter offgas system before loop seal liquid levels drop to a point that would allow in-leakage into the melter offgas system through the drain line."

Section 4.4.9.5 of 24590-WTP-PSAR-ESH-01-002-03, *Preliminary Documented Safety Analysis to Support Construction Authorization; LAW Facility* states the following:
"Terminating the air to the melter feed ADS pumps upon detection of a loss of adequate flow to the loop seal (recirculation line flow) terminates melter feed. However, allowing unlimited water additions to the melter once the primary melter feed has been stopped can extend cold cap durations. Therefore, water to the ADS pumps is also isolated. A timed delay in water isolation is allowed for flushing activities, with related analytical limits and setpoints accounting for this time delay. Based on the results presented in 24590-LAW-RPT-ENS-10-001, allowing a short delay in water isolation (on the order of 5-10 min) does not change that the NOx concentrations 2 hr after feed termination will be well below TEEL-3 values."

Verification: Verification is expected to be achieved through the following:

Verif. Method	Verif. By	Plan	Notes/Comments
I	ENG	Review the design for incorporation of the system specific interlock physical components.	Additional verification criteria for this interlock are discussed in the LOP/LVP SDD.

3.8.2.2.9 Terminate Melter Feed – LVP Header Low Vacuum

Requirement: Upon detection of low LVP header vacuum, feed to both melters shall be terminated. The method of feed termination is by:

1. Isolating air to the melter feed ADS pumps of both melters.

[Section 4.4.33.3, PDSA - LAW Facility, [ID : WTP-PSAR-ESH-01-002-03 ID#12442]] (J.2.1).

Basis Discussion:

Section 4.4.33.3 of 24590-WTP-PSAR-ESH-01-002-03, *Preliminary Documented Safety Analysis to Support Construction Authorization; LAW Facility* states the following:

"Shutting off feed on reduced LVP header vacuum removes the source of NO_x necessary for the formation of ammonium nitrate in the offgas system components, before complete blockage of flow can occur."

Section 4.4.33.3 of 24590-WTP-PSAR-ESH-01-002-03, *Preliminary Documented Safety Analysis to Support Construction Authorization; LAW Facility* states the following:

"It is noted that while other melter feed termination interlocks include a subsequent isolation of the water supply to the ADS pumps due to concerns related to cold cap durations, no such issue exists for low LVP header vacuum."

Verification: Verification is expected to be achieved through the following:

Verif. Method	Verif. By	Plan	Notes/Comments
I	ENG	Review the design for incorporation of the system specific interlock physical components.	Additional verification criteria for this interlock are discussed in the LOP/LVP SDD.

3.8.2.2.10 Terminate Melter Feed - Loss of Normal Power

Requirement: Upon detection of a loss of normal power, feed to both melters shall be terminated. The method of feed termination is achieved by:

1. First isolating air to the melter feed ADS pumps of both melters.
2. Followed by the isolation of water (after line flushes, as necessary) to the melter feed ADS pump of both melters.

[Sections 4.4.10.3, PDSA - LAW Facility, [ID : WTP-PSAR-ESH-01-002-03 ID#11998]] (J.2.1.).

Basis Discussion: Upon detection of loss of normal power, the melter offgas system must automatically be placed into a configuration that allows the exhausters, when placed at a predetermined setting, to maintain confinement for no less than 2 hr.

Section 4.4.10.1 of 24590-WTP-PSAR-ESH-01-002-03, *Preliminary Documented Safety Analysis to Support Construction Authorization; LAW Facility* states the following:

"Feed to both melters is terminated to support placing the melter offgas system into a configuration allowing the exhausters to maintain confinement for the required period during cold cap burn off."

Section 4.4.10.5 of 24590-WTP-PSAR-ESH-01-002-03, *Preliminary Documented Safety Analysis to Support Construction Authorization; LAW Facility* states the following:

"The uninterruptible power supplies for the offgas exhausters are sized such that no sequencing of the offgas exhausters will be necessary during a loss of power event - each UPS is sized sufficiently to power its associated exhauster for the required period during cold cap burn off. In support of this, upon detection of loss of normal power, the melter offgas system is automatically placed into a known configuration to ensure the exhausters can maintain the required confinement function...

Terminating the air to the melter feed ADS pumps terminates melter feed. However, allowing unlimited water additions to the melter once the primary melter feed has been stopped can extend cold cap durations. Therefore, water to the ADS pumps is also isolated. A timed delay in water isolation is allowed for flushing activities, with related analytical limits and setpoints accounting for this time delay. Based on the results presented in 24590-LAW-RPT-ENS-10-001, allowing a short delay in water isolation (on the order of 5-10 min) does not change that the NOx concentrations 2 hr after feed termination will be well below TEEL-3 values."

[ALARA]

Verification: Verification is expected to be achieved through the following:

Verif. Method	Verif. By	Plan	Notes/Comments
I	ENG	Review the design for incorporation of the system specific interlock physical components.	Additional verification criteria for this interlock are discussed in the UPE SDD.

3.8.2.3 Instrumentation Location

Requirement: Transducer panels housing liquid level systems, and associated input/output, and pressure transducers, shall be located in a C3 classified area as a precaution against back-contamination. [Sections 7.1, 9.1, 11.16, ORD, [WTP-RPT-OP-01-001 ID#1106], [ID : WTP-RPT-OP-01-001 ID#1373], [ID : WTP-RPT-OP-01-001 ID#1186]] [Section 9.5.6, BOD, [ID : DB-ENG-01-001 ID#11107]].

Basis Discussion: Transducer panels housing liquid level systems, and associated input/output, and pressure transducers are located in C3 areas in case leakage occurs.

[ALARA]

Verification: Verification is expected to be achieved through the following:

Verif. Method	Verif. By	Plan	Notes/Comments
I	ENG	Review design to verify that transducer panels and associated input/output, and pressure transducers are located in a shielded transducer bulge or a C3 classified areas.	

3.8.2.4 Implementation of Active Safety Instrumented Functions

Requirement: The active safety instrumented functions for the LCP and LFP systems shall be designed in accordance with the safety criterion 4.3-1, 4.3-3, 4.3-4, 4.3-6, 4.4-1 and 4.4-2 of 24590-WTP-SRD-ESH-01-001-02, Safety Requirements Document Volume II. [Safety Criterion 4.3-1, 4.3-3, 4.3-4, 4.3-6, 4.4-1 and 4.4-2, SRD, [ID : SRD-ESH-01-001-02 ID#44], [ID : SRD-ESH-01-001-02 ID#46], [ID : SRD-ESH-01-001-02 ID#47], [ID : SRD-ESH-01-001-02 ID#50], [ID : SRD-ESH-01-001-02 ID#53], [ID : SRD-ESH-01-001-02 ID#54], [ID : SRD-ESH-01-001-02 ID#47]].

Basis: The SRD establishes the criterion and applicable standards for the safety design. The design processes including 24590-WTP-GPG-J-015, *Safety Instrumented System Implementation* and electrical design criteria are used to ensure independence and that the design complies with the mandated standards. The completed designs are documented in Safety Systems Requirements Specification and other design documents, which are required to be verified to ensure compliance with the standards.

Verification: Verification is expected to be achieved through:

Verif. Method	Verif. By	Plan	Notes/Comments
I	ENG	Verify the Safety Systems Requirements Specifications and designs are in accordance with the criterion and standards in safety criterion 4.3-1, 4.3-3, 4.3-4, 4.3-6, 4.4-1 and 4.4-2 of 24590-WTP-SRD-ESH-01-001-02, Safety Requirements Document Volume II.	DVR report

3.8.3 System Interface Requirements

3.8.3.1 Programmable Protection System-Active Safety Instruments

Requirement: The LFP Instruments with active safety functions shall interface with the PPJ or be engineered as local safety instrumented functions. Signal interfaces shall use standard 4-20 mA or digital contacts. [Sections 7.1, 9.4.1 BOD, [ID : DB-ENG-01-001 ID#10529], [ID : DB-ENG-01-001 ID#10964]].

Basis Discussion: Active safety instrumentation is implemented independently to the normal control system (PCJ/ MHJ) through the PPJ system or in local logic solvers. The PPJ is the main safety system logic solver used on WTP and includes logic programming to implement the active safety controls.

Appendix C provides a list of the LFP active safety instrumented functions and implementing components for the LFP systems.

Verification: Verification is expected to be achieved through the following:

Verif. Method	Verif. By	Plan	Notes/Comments
I	ENG	Verify required interface included in specifications and material requisitions (MRs) used to procure active safety instruments.	

3.8.3.2 Process Control System - Instruments

Requirement: Instruments connected to the PCJ system shall not perform any credited active safety function. Instruments connected to the PCJ may include and perform safety boundary or retention functions. LFP instruments shall use standard commercially available instrumentation and communication protocols to interconnect to the PCJ system. Fieldbus, Modbus or Profibus communication may be used. [Sections 7.1, 9.4.1, BOD, [ID : DB-ENG-01-001 ID#10529], [ID : DB-ENG-01-001 ID#10963]].

Basis Discussion: The PCJ is used as the normal process control system. The PCJ allows remote operator control and monitoring of the LFP processes.

Verification: Verification is expected to be achieved through the following:

Verif. Method	Verif. By	Plan	Notes/Comments
I	ENG	Verify instruments connected to PCJ meets the applicable requirements.	

3.8.4 Other Technical, Specialty, Operations and Maintenance Requirements

3.8.4.1 Accessibility for Calibration, Testing, and Inspection

Requirement: The LCP and LFP system design shall provide the capability to access and perform (out cave) calibration, periodic functional testing, and inspections of equipment and components during normal operation. [Sections 6.7, 8.1.2, 9.12, 12.6.3, BOD, [ID : DB-ENG-01-001 ID#10415], [ID : DB-ENG-01-001 ID#10698], [ID : DB-ENG-01-001 ID#11150], [ID : DB-ENG-01-001 ID#11736]] [Section 9.1, 11.16, 14.4 ORD, [ID : WTP-RPT-OP-01-001 ID#1173], [ID : WTP-RPT-OP-01-001 ID#1373], [ID : WTP-RPT-OP-01-001 ID#1486]].

Basis Discussion: None.

[ALARA]

Verification: Verification is expected to be achieved through the following:

Verif. Method	Verif. By	Plan	Notes/Comments
I	ENG	Review LFP/LCP design for configurations out of cave that will facilitate calibration, periodic functional testing, and inspection of equipment and components during normal operation	May be documented in an assessment/evaluation.

3.8.4.1.1 Purge Air Liquid Level Instrumentation (Pneumercator)

Requirement: Purge air liquid level instrumentation (pneumercator) shall be designed ensuring the lines in process vessels do not plug (for example, automatic bubbler flushes) by including mechanical (clean-out port) capability for unplugging the pneumercator tubes if a plug occurs and flushing is unsuccessful. [Section 11.16, ORD, [ID : WTP-RPT-OP-01-001 ID#1373]].

Basis Discussion: None. [ALARA]

Verification: Verification is expected to be achieved through the following:

Verif. Method	Verif. By	Plan	Notes/Comments
I	ENG	Review design documentation to verify purge air liquid level instrumentation lines have capability for unplugging the pneumercator tubes.	

3.8.4.1.2 Temperature Element Installation

Requirement: Temperature elements shall be installed in thermowells to allow removal without significantly interrupting the process. [Section 11.16, ORD, [ID : WTP-RPT-OP-01-001 ID#1373]].

Basis Discussion: Installing temperature elements in thermowells reduces maintenance time and worker exposure to process fluids. Although processes will still be interrupted during maintenance, the extent of the interruption will be minimized.
[ALARA]

Verification: Verification is expected to be achieved through the following:

Verif. Method	Verif. By	Plan	Notes/Comments
I	ENG	Review design to verify temperature elements are installed in thermowells.	

3.9 Other Structures, Systems, and Components Requirements

3.9.1 Mission and Functional / Performance Requirements (Including States/Modes)

None.

3.9.2 Nuclear Safety, ALARA, Environmental, and Other Regulatory Requirements

None.

3.9.3 System Interface Requirements

None.

3.9.4 Other Technical, Specialty, Operations and Maintenance Requirements

None.

3.9.4.1 Test Points

Requirement: The design shall include isolation and test points, including drain and bleed valves on piping, to allow for removal, replacement, and testing of plant items required during normal operations. [Section 9.1, ORD, [WTP-RPT-OP-01-001 ID#1185], [ID : WTP-RPT-OP-01-001 ID#1173]] [Sections 11.5.1, BOD, [ID : DB-ENG-01-001 ID#11459]].

Basis Discussion: None.

[ALARA]

Verification: Verification is expected to be achieved through the following:

Verif. Method	Verif. By	Plan	Notes/Comments
I	ENG	Review design documents to verify accessible test points, including drain/bleed valves, exist where needed.	

3.10 Relevant Codes and Standards

3.10.1 Codes of Record

The table below identifies relevant external codes and standards applicable to the LCP and LFP design. These are selected from those documents that comprise the Code of Record (COR) as established in 24590-WTP-RPT-ENG-01-001, *Technical Baseline Description*, i.e., the WTP Contract, the Basis of Design (BOD), and the Safety Requirements Document Volume II (SRD). Use of these documents is typically invoked in the design process through the documents identified in Section 3.10.2. Beyond inclusion here, no attempt is made in this document to extract individual design requirements from these documents for allocation to SSCs.

In some cases, the expected means of verification may be established on the basis of tests or other criteria required by the codes and standards. This does not necessarily include verification or testing more appropriately defined in the procurement of individual sub-systems or components, or which is a routine activity defined by specifications and/or procedures used by construction and startup.

Table 3-7 LCP and LFP Applicable Codes and Standards

Implementing Codes and Standards: [Contract No. DE-AC27-01RV14136, WTP Contract]
• NFPA 801-2003, *Standard for Fire Protection for Facilities Handling Radioactive Materials*, as tailored in Appendix C of the SRD.
Implementing Codes and Standards: [24590-WTP-DB-ENG-01-001, Rev 02, Basis Of Design]
• API STD-620, *Design and Construction of Large, Welded, Low-Pressure Storage Tanks.*
• AWS D1.1, *Structural Welding Code - Steel.*
• AWS D1.6, *Structural Welding Code - Stainless Steel.*
Implementing Codes and Standards: [24590-WTP-SRD-ESH-01-001-02, Rev 7, Section 4, *SRD*]
• ANSI/ANS 58.8-1994, *Time Response Design Criteria for Safety-Related Operator Actions.*
• ANSI/ANS 58.9-1981, *Single Failure Criteria for Light Water Reactor Safety-Related Fluid Systems.*
• ANSI/ISA-67.04.01-2006, *Setpoints for Nuclear Safety-Related Instrumentation*, as tailored in Appendix C of the SRD.
• ANSI/ISA-S84.01-1996, *Application of Safety Instrumented Systems for the Process Industries.*
• ASME B31.3-1996, *Process Piping*, as tailored in Appendix C of the SRD
• ASME SEC VIII, Division I, *Boiler and Pressure Vessel Codes, Rules for Construction of Pressure Vessels*
• IEEE 323-1983, Qualifying Class 1E Equipment for Nuclear Power Generating Stations, as tailored in Appendix C of the SRD.
• IEEE 338-1987, *Standard Criteria for Periodic Surveillance Testing of Nuclear Power Generating Station Safety Systems*, as tailored in Appendix C of the SRD.
• IEEE 344-1987 (R1993), IEEE Recommended Practice for Seismic Qualification of Class 1E Equipment for Nuclear Power Generating Stations, as tailored in Appendix C of the SRD.
• IEEE 379-1994, Application of the Single Failure Criterion to Nuclear Power Generating Station Safety Systems, as tailored in Appendix C of the SRD.
• IEEE 384-1992, *Standard Criteria for Independence of Class 1E Equipment and Circuits*, as tailored in Appendix C of the SRD.
• IEEE 497-2002, *Standard Criteria for Accident Monitoring Instrumentation for Nuclear Power Generating Stations* as tailored in Appendix C of the SRD.
• IEEE 628-1987, *Standard Criteria for the Design, Installation, and Qualification of Raceway Systems for Class 1E Circuits for Nuclear Power Generating Stations,* as tailored in Appendix C of the SRD.
• IEEE 1023-1988, *Guide for the Application of Human Factors Engineering to Systems, Equipment, and Facilities of Nuclear Power Generating Stations.*
• NEMA 250, *Enclosures for Electrical Equipment (1000 Volts Maximum)*

3.10.2 WTP Design Criteria, Design Guides, and General Specifications

Table 3-8 WTP Design Criteria, Design Guides, and General Specifications Applicable to LCP and LFP identifies relevant discipline design criteria, guides, and general specifications applicable to the LAW Facility LCP/LFP systems. Use of these documents to develop the detailed design of SSCs is governed by engineering procedures. The majority of requirements contained within these documents is derived from external codes and standards or are specified methods and approaches to achieve standardization and consistency of design. Beyond inclusion here, no attempt is made in this document to extract individual design requirements from these documents for tracing and verification, or to define how direction provided by these documents is applicable and allocated (or not) to individual SSCs.

Table 3-8 WTP Design Criteria, Design Guides, and General Specifications Applicable to LCP and LFP

Document Number	Title
Design Criteria Documents:	
24590-WTP-DC-M-06-001	Mechanical Systems Design Criteria
24590-WTP-DC-E-01-001	Electrical Design Criteria
24590-WTP-DC-E-06-002	Design Criteria for Independence of Safety Equipment and Circuits
24590-WTP-DC-E-07-001	Design Criteria for Electrical Jumpers
24590-WTP-DC-ENG-06-001	Design Criteria for Environmental and Natural Phenomena Hazard Qualification of Structures Systems and Components
24590-WTP-DC-PS-01-001	Pipe Stress Design Criteria Including "Pipe Stress Criteria" and "Span Method Criteria"
24590-WTP-DC-PS-01-002	Pipe Support Design Criteria
24590-WTP-DC-PS-03-001	Jumper Stress Design Criteria
24590-WTP-DC-ST-04-001	Seismic Analysis and Design Criteria
Design Guides:	
24590-WTP-GPG-ENG-004	Design Guide Pipe Stress, Pipe Layout, and Support Spacing
24590-WTP-GPG-ENG-005	Engineering Design Guide for Pipe Support
24590-WTP-GPG-ENG-086	Equipment Environmental Qualification
24590-WTP-GPG-ENG-0094	Pipe Design Work Process
24590-WTP-GPG-ENG-0099	Design Verification of Plant Design Deliverables
24590-WTP-GPG-ENG-0103	Equipment Seismic Qualification
24590-WTP-GPG-ENG-0109	Accessibility Review of Equipment and Components
24590-WTP-GPG-ENG-0118	Piping Component Stock Codes
24590-WTP-GPG-ENG-0119	Isometric Drawings Production
24590-WTP-GPG-ENG-0123	Disposition of Hard to Reach Spools
24590-WTP-GPG-ENG-0127	Processing Engineering Calculations
24590-WTP-GPG-ENG-0141	WTP Radiation Damage Thresholds for Non-Metallic Materials
24590-WTP-GPG-ENG-0144	Piping Interface with Flexible Equipment-Stress Analysis Design Guide
24590-WTP-GPG-ENG-0145	SC-IIIE Piping - Stress Analysis Design Guide
24590-WTP-GPG-ENG-0146	Piping Coating System Selection Guide
24590-WTP-GPG-ENG-0149	Piping Classification Guide
24590-WTP-GPG-ENG-0150	Plant Design/Mechanical Systems Equipment Interfaces: Terminal End Equipment
24590-WTP-GPG-ENG-0153	Safety Instrumentation - Independent Protection Layer Identification
24590-WTP-GPG-ENG-0159	Single Failure Analysis Process for Mechanical, HVAC, and Control Systems
24590-WTP-GPG-ENG-0165	Pipe Stress and Supports Confirmation
24590-WTP-GPG-J-005	Control Systems Interfaces
24590-WTP-GPG-J-014	Control Systems Design Process Guide

Document Number	Title
24590-WTP-GPG-J-015	Safety Instrumented System Implementation
24590-WTP-GPG-J-016	Control Valve Sizing
24590-WTP-GPG-J-017	WTP Seismic Category Application to C&I Systems
24590-WTP-GPG-J-0057	Setpoint Calculations
24590-WTP-GPG-M-002	Hydraulic Seals
24590-WTP-GPG-M-011	Pipe Sizing for Compressible Flow
24590-WTP-GPG-M-012	Pump Net Positive Suction Head
24590-WTP-GPG-M-013	Plant Wash System Design
24590-WTP-GPG-M-016	Pipe Sizing for Lines with Liquids Containing Solids - Bingham Plastic Model
24590-WTP-GPG-M-017	Design Parameters & Test Pressures for Equipment & Piping
24590-WTP-GPG-M-019	Vessel Sizing
24590-WTP-GPG-M-022	Liquid and Vapor Line Sizing By Formula
24590-WTP-GPG-M-023	Other Losses in Piping Systems
24590-WTP-GPG-M-027	Recommended Slopes for Piping Systems
24590-WTP-GPG-M-028	Vent, Drain, and Root Valve Sizing and Selection for Piping Systems
24590-WTP-GPG-M-032	Vessel Overflow and Gravity Line Sizing
24590-WTP-GPG-M-036	Determining Quality Level and Seismic Category Classification of Sub-Components, Assemblies, Sub-Assemblies, and Parts
24590-WTP-GPG-M-047	Preparation of Corrosion Evaluations
24590-WTP-GPG-M-050	Pressure Vessel and Heat Exchanger Design
24590-WTP-GPG-M-052	Specifying Design Cycles for Equipment and Piping
24590-WTP-GPG-M-0058	Minimum Flow Velocity for Slurry Lines
24590-WTP-GPG-M-0059	Avoiding Chemical Line Plugging - Plant Design Considerations
24590-WTP-GPG-M-0061	Vessel Structural Analysis and ASME Section VIII Evaluation
24590-WTP-GPG-P-0003	Jumper Design Guide
24590-WTP-GPG-PL-002	Plant Design Material Control Guide
24590-WTP-GPG-SRAD-001	Design Guide for ALARA
24590-WTP-GPG-ENG-0168	Guide for Calculating Analytical Limits
Specifications:	
24590-WTP-3PS-G000-T0015	Engineering Specification for Environmental Qualification of Mechanical Equipment
24590-WTP-3PS-JQ00-T0004	Engineering Specification for Management of Supplier Software
24590-WTP-3PS-JQ00-T0005	Engineering Specification for Management of Supplier Safety Software
24590-WTP-3PS-JQ06-T0005	Engineering Specification for Environmental Qualification of Control and Electrical Systems and Components
24590-WTP-3PS-JQ07-T0001	Engineering Specification for Instrumentation for Package Systems

Document Number	Title
24590-WTP-3PS-JQ08-T0001	Engineering Specification for Construction and Installation of Controls and Instrumentation
24590-WTP-3PS-M000-T0001	Engineering Specification for Air Displacement Slurry Pumps
24590-WTP-3PS-MACS-T0003	Engineering Specification for Mechanical Agitators
24590-WTP-3PS-MPC0-T0009	Engineering Specification for Vessel-Mounted Vertical Transfer Pumps - WTP LAW Facility
24590-WTP-3PS-MV00-T0001	Engineering Specification for Pressure Vessel Design and Fabrication
24590-WTP-3PS-MV00-T0002	Engineering Specification for Seismic Qualification Criteria for Pressure Vessels
24590-WTP-3PS-MV00-T0003	Engineering Specification for Pressure Vessel Fatigue Analysis
24590-WTP-3PS-NWP0-T0001	Engineering Specification for General Welding and NDE Requirements for Supplier Fabricated Piping
24590-WTP-3PS-PB01-T0001	Engineering Specification for Technical Supply Conditions for Pipe, Fittings, and Flanges
24590-WTP-3PS-PH01-T0001	Engineering Specification for Technical Supply Conditions 'QL' Pipe Supports

4 System Description

4.1 Configuration Information

4.1.1 Description of System, Subsystems, and Major Components

4.1.1.1 LCP and LFP System Overview

The CRVs, MFPVs, and MFVs are located in the wet process cells. Primary confinement for waste is the process vessels and piping. The secondary confinement for waste is mainly provided by the cell structure and valve bulges, and associated ventilation equipment. The wet process cells have sumps with level instrumentation to detect and collect vessel overflow fluids and leaks. Vessel system components are tested for leak tightness prior to being placed in use. The vessels are designed, fabricated, tested and installed following all applicable specifications and design codes and standards to ensure vessel structural integrity.

The LCP and LFP systems rely on the Process Area Bridge Crane (RWH-CRN-00008) for removal/installation of heavy equipment, such as agitators and pumps. This crane is designed with the capacity to remove/install heavy equipment including the LFP vessels. Vessels will be emptied of contents and flushed prior to removal.

Operations using equipment located in the wet process cells and bulges are normally performed remotely by operators in the FCR. Most instruments and valves are placed out-cell in equipment bulges and instrument racks located in R3/C3 areas on the 28 ft, 0 in. level, above the wet process cells for personnel access. To facilitate periodic hands on maintenance for equipment in the wet process cell, the vessels are equipped with wash rings used for decontamination purposes. DIW and other utilities can be attached to the water supply line into the wet process cells for use during maintenance activities.

4.1.1.2 LCP System Components

4.1.1.2.1 TCP Transfer Lines

There are three TCP system pipelines that convey LAW concentrate from PT to the LCP system: one main transfer line connected to the LCP receipt header inside LCP-BULGE-00001, a second line piped to the header as a spare, and a third line capped off inside the bulge and not connected to the header. The third line is to be connected upon failure of the primary transfer lines. The TCP transfer header connected to the pipelines is monitored in PT for high radiation. On a high radiation alarm, local and remote indication will be annunciated while a trip closes valves to stop the transfer to the LCP system. See Section 4.2.3.1 for a description of the LAW concentrate receipt sequence.

The transfer lines are sloped back to PT and drain to the ultimate overflow vessel (PWD-VSL-00033) so all pipe drainage is recycled for reprocessing. The transfer lines are each encased with an outer pipe that drains to a LDB located in PT. The encasement piping is terminated inside the LAW wet process cells before entering LCP-BULGE-00001. The outer pipe has a hose connection so it can be flushed from the LCP system to the LDB.

There are four pipelines (one from each of the two pumps in each vessel) to move LAW concentrate from the CRV to the transfer headers in LCP-BULGE-00002 and -00003. Once the solution reaches the transfer header, it can be directed to either of the MFPVs, the other CRV, the autosampler, or the plant wash vessel.

4.1.1.2.2 Concentrate Receipt Vessels

The CRV vessels (LCP-VSL-00001/2) batch capacity is 9,115 gallons. The total vessel volume, which includes the heel volume and the vapor space, is ~18,000 gallons. The vessel foundation is designed to handle weight in excess of a filled vessel. Each CRV has the capacity to prepare four batches of melter feed for transfer forward to the LFP melter feed preparation vessels (LFP-VSL-00001/-00003).

For detailed vessel volumes see the LCP vessel sizing calculation, 24590-LAW-M6C-LCP-00001. The C3/C5 drains/sump collection vessel (RLD-VSL-00004) receives overflows from the CRVs. The combination of welded vessels/piping, process cell containment, and the offgas system provide multiple confinement barriers. The welded piping and vessels and C3/C5 sumps minimize system leaks, confine liquid releases, and route them to a dedicated area. The vessel anchorage is SC-III. Signs and labels, when required by code, are used to identify materials in the vessels as well as dangers associated with the materials.

The vessel size is based on the batch size, operator response time, instrument error, normal heel volume, and mixing volume. A profile sketch of the vessel is shown in Figure 4-1.

The equipment/operations associated with the CRVs that promote D&D include:

- Internal spray nozzles that spray the inside of the vessel with DIW,
- Flushing the inside of the vessel with DIW (from spray nozzles or from valve bulges),
- Pumping the vessel to its minimum volume,
- Use of other decontamination solutions through header connections to the spray nozzles during final D&D.

Each LAW CRV is equipped with the following:

- Mechanical agitator (LCP-AGT-00001 or -00002)
- Two 100% pumps (LCP-PMP-00001A/B or -00002A/B) to transfer LAW concentrate
- Two internal rotary spray nozzles (LCP-NOZ-00001, -00002 or LCP-NOZ-00003, -00004) for periodic wash-down (for the CRVs the rotary spray nozzles were preferred over a fixed spray ring). One nozzle is also used to provide sweep air form the PSA.
- Overflow to C3/C5 drains/sump collection vessel RLD-VSL-00004 via a common overflow header
- Pressure, level (redundant), temperature, and density instruments
- Vent to the LVP vessel vent collection header

Figure 4-1 Concentrate Receipt Vessel

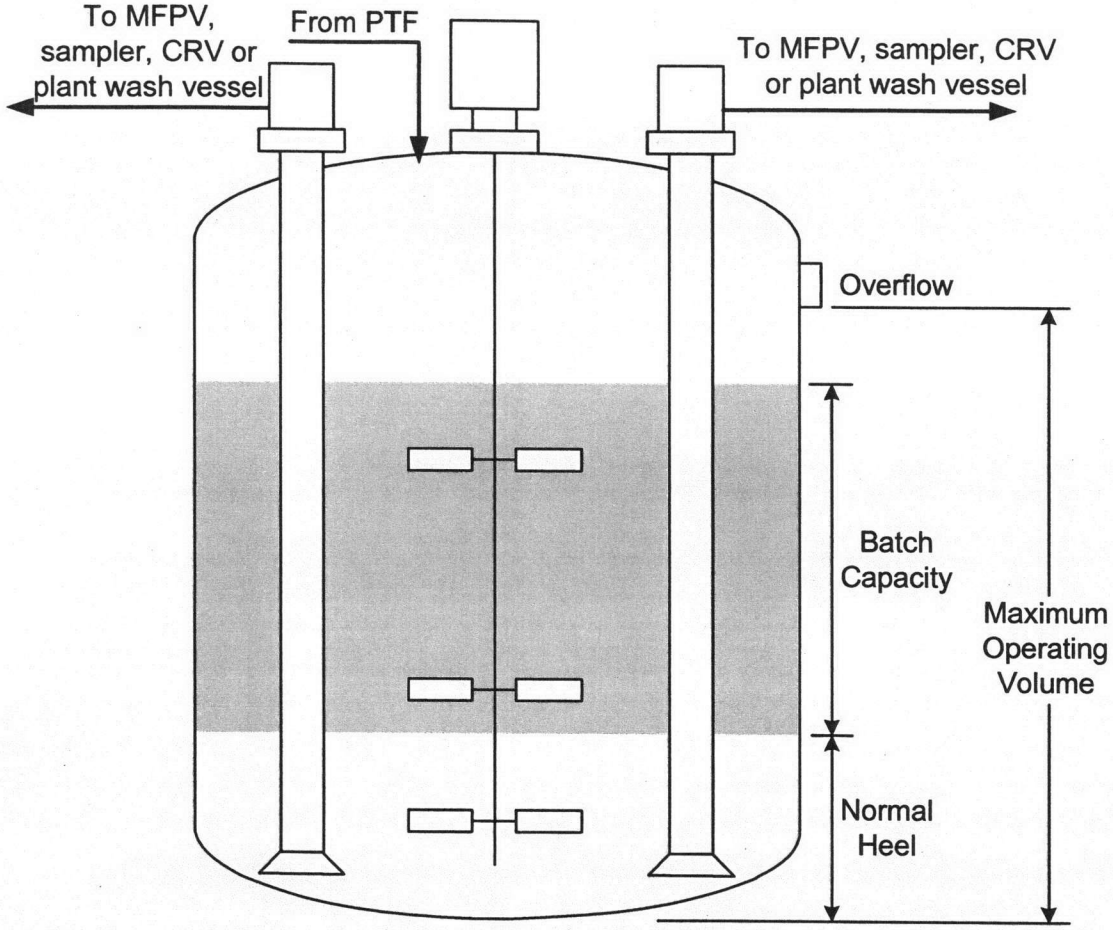

4.1.1.2.3 Mechanical Agitator

The mechanical agitators (LCP-AGT-00001 & -00002) for these vessels are designed for continuous operation. At minimum, the agitators must be used to mix the solution prior to and during sampling operations. This maintains the insoluble solids in suspension allowing representative samples to be extracted. Continuous agitation is used to maintain vessel temperature preventing dissolved solids from cooling, crystallizing. and dropping out of solution.

4.1.1.2.4 Pumps

Pumps (LCP-PMP-00001A/B, -00002A/B) are vertical centrifugal pumps and flange mounted on the vessel. The nominal 88 gpm discharge from the concentrate receipt vessel pump is routed to a valve bulge where the flow is directed by a valve manifold to either of the MFPVs, the autosampler, the other CRV, or to the plant wash vessel (RLD-VSL-00003). The pumps are tripped on high manifold pressure to protect against dead-head operation.

Each pump is provided with a pressurized column enclosing the pump shaft to prevent the concentrate within the vessel from contacting the upper and lower seals and bearings in the shaft. The pressure inside both pump columns of a CRV is maintained higher than the equivalent maximum static head of the concentrate outside the column using seal water supplied by a common expansion vessel (LCP-VSL-00005 or -00006). The expansion

vessels and associated valving and instruments are located on the 28 ft, 0 in. level. The seal water supply valve to each pump column (LCP-YV-0156, -0157, -0277, and -0278) is normally open.

4.1.1.2.5 Vessel Wash System

Each CRV is equipped with two rotary spray nozzles (360° spherical wash pattern) for periodic vessel washdown to support maintenance activities. The spray nozzles are connected to the DIW system and supply demineralized water to the vessel interior surfaces. The pumps transfer the wash solution into the plant wash vessel (RLD-VSL-00003). The plant wash vessel contents can be transferred back to the PT plant wash vessel (PWD-VSL-00044).

4.1.1.2.6 Valve Bulges

The valve bulges for the LCP system provide secondary containment away from the process cell where the control valves and valve actuators will be accessible for maintenance. Interfaces with the DIW systems and the process lines internal to the piping bulge are equipped with isolation valves and check valves to prevent back flow from the bulge to the C3 area. Each bulge is equipped with a wash ring and drain line for decontamination of the bulge internals. Each bulge also has a removable spool piece to allow addition of pressurized chemicals (such as antifoam reagents) to either the transfer lines or the LCP vessels as required.

4.1.1.2.7 Process Control Valves

The LCP bulges contain the LAW process control valves that are used during concentrate receipt, sampling, and transfer of the CRV contents. For each operation, there will be one valve alignment to ensure only one flow path, the desired path, is available.

4.1.1.2.8 Process Cell Sumps

The LCP bulges drain to a sump (RLD-SUMP-00029 or -00031) that is pumped to the plant wash vessel (RLD-VSL-00003). Any leaks from the CRVs will drain into the process cell sumps (RLD-SUMP-00029, -00030, -00031, or -00032). The sumps have level instrumentation with a high-high level alarm and a high rate of change alarm to notify operators of possible leaks from the piping or vessels.

4.1.1.2.9 Instrumentation and Controls

The CRVs and associated bulges are equipped with instrumentation. The data is collected by the sensing elements, which are located in the CRVs or in the bulges. The signal is sent to the transmitters, which are located in instrument racks on the 28 ft, 0 in. level.

The PCJ system is a plant-wide system for monitoring and control of the process, ventilation, and services within the PT, HLW, and LAW facilities. The PCJ is an integral part of the Integrated Control Network and provides the following functions:

- Monitoring of independent protection trips
- Device interlocks

The PCJ also provides startup initiation, status monitoring, and shutdown initiation of independently controlled services and utilities.

A main LAW control room is located on the 15 foot elevation of the LAW annex, located next to the LAW facility.

4.1.1.3 LFP System Components

4.1.1.3.1 Melter Feed Preparation Vessels

The MFPVs (LFP-VSL-00001 and -00003) receive and mix LAW concentrate with glass formers and sucrose. LAW concentrate is received in the MFPV from a CRV (LCP-VSL-00001 or -00002) via a valve bulge (LCP-BULGE-00002 or -00003). Glass formers are received in the MFPV from a glass former mixer enclosure (GFR-TK-00022 or -00023).

Each MFPV is equipped with the following:

- One mechanical agitator (LFP-AGT-00001 or LFP-AGT-00003)
- Two vertical pumps (LFP-PMP-00001A/B or LFP-PMP-00003A/B)
- Two spray nozzles (LFP-NOZ-00001 to -00002, or LFP-NOZ-00006 to -00007). One nozzle is also used to provide sweep air.
- Overflow line
- Vent line
- Sample return line

The mechanical agitator continuously mixes the vessel contents to keep insoluble solids in suspension. The time required for uniform blending of each batch is 2 hr.

Off-spec LAW concentrate or melter feed should be diluted down with demineralized water in the MFPV as much as possible. If the LAW concentrate or melter feed needs to be transferred back to the Pretreatment facility plant wash vessel (PWD-VSL-00044) for reprocessing, further dilution can be performed in the LAW plant wash vessel until the solids content is less than 5 wt%.

Demineralized water is also supplied to spray nozzles for washdown of MFPV interior surfaces. The wash water is transferred to the plant wash vessel. Each MFPV overflows to the C3/C5 drains/sump collection vessel (RLD-VSL-00004) via a common header. Each MFPV vents to the HEPA filter preheaters (LVP-HTR-00001A/B) via the vessel vent header.

Vessel LFP-VSL-00001 interfaces with sampler ASX-SMPLR-00013, and vessel LFP-VSL-00003 interfaces with sampler ASX-SMPLR-00012. Each MFPV shares a sample recirculation line with its corresponding MFV. Melter feed can be recirculated through a LFP bulge to the sampler cabinet where a representative portion of the stream is collected before the melter feed is returned to the MFPV. Sample lines are flushed at the completion of sampling operations with one pipeline volume.

4.1.1.3.2 Melter Feed Vessels

The MFVs (LFP-VSL-00002 and -00004) receive blended melter feed from the MFPVs for feed to the corresponding LAW melter (LMP-MLTR-00001 or -00002).

Each MFV is equipped with the following:

- One mechanical agitator (LFP-AGT-00002 or LFP-AGT-00004)
- Six ADS pumps (LFP-PMP-00007 thru -00012, or LFP-PMP-00013 thru -00018)
- One vertical pump (LFP-PMP-00002 or -00004)
- Three spray nozzles (LFP-NOZ-00003 to -00005, or LFP-NOZ-00008 to -00010). One nozzle is also used to provide sweep air.

- Overflow line
- Vent line
- Sample return line

The mechanical agitator continuously mixes the vessel contents to keep insoluble solids in suspension. If mixing is lost and solids settle out the time required to re-suspend and uniformly the solids in a batch of melter feed is 2 hr.

Off-spec melter feed should be diluted down with demineralized water in the MFV as much as possible. If the melter feed needs to be transferred back to the Pretreatment facility plant wash vessel (PWD-VSL-00044) for reprocessing, further dilution can be performed in the LAW plant wash vessel until the solids content is less than 5 wt%.

Demineralized water is also supplied to the spray nozzles for washdown of the MFV interior surfaces. The wash water is transferred to the plant wash vessel.

Each MFV overflows to its corresponding MFPV, which in turn overflows to the C3/C5 drains/sump collection vessel via a common header. Each MFV vents to the HEPA filter preheaters via the vessel vent header.

Vessel LFP-VSL-00002 interfaces with sampler ASX-SMPLR-00013, and vessel LFP-VSL-00004 interfaces with sampler ASX-SMPLR-00012. Each MFV shares a sample recirculation line with its corresponding MFPV. Melter feed can be recirculated through a LFP bulge to the sampler cabinet then back to the source LFP vessel. Once a steady flow is established several grab samples are pulled from the flow stream to provide a representative sample. Sample lines are flushed at the completion of sampling operations with one pipeline volume.

4.1.1.3.3 Feed/Prep Valve Bulges

Each feed/prep valve bulge (LFP-BULGE-00001 and -00002) houses twelve out-of-cell actuated valves that allow process streams to be directed to different destinations. The valve line-up within the bulge allows LAW concentrate or melter feed from a MFPV to be routed as described in section 4.1.1.3.1. The valve line-up also allows melter feed from a MFV to be routed as described in section 4.1.1.3.2. MFPV can not directly transfer to a non-corresponding MFV. Pipelines internal to the process bulges are sloped to allow free drainage to sending &/or the receiving vessels.

Each valve bulge is equipped with the following:

- Perimeter water spray
- HEPA filter (LFP-HEPA-00001 or -00002)
- Floor drain (LFP-FD-00001 or -00002)

The valve bulges contain a perimeter water spray for internal bulge rinse down. Any spills, leaks, or rinse water is routed to the wet process cell sump (RLD-SUMP-00030 or -00032) via the bulge floor drain. To prevent overflow of the LFP bulges into co-located areas there is an operational limit of a maximum run time of 5 minutes followed by 15 minutes of drain time. Each bulge also has a removable spool piece to allow addition of pressurized chemicals (such as antifoam reagents) to either the transfer lines or the LFP vessels as required. Flush connections internal to the bulge for cleaning of process lines is equipped with check valves as well as isolation valves to prevent cross-contamination of process waste into worker occupied (C3) areas. All valve actuators are located external to the bulge at the top. Valve bulges have top access ports for valve replacement.

4.1.1.3.4 Process Control Valves

The LFP bulges contain the LAW process control valves that are used during receipt, sampling, and transfer of the MFPV and MFV contents. For each operation, there will be one valve alignment to ensure only one flow path, the desired path, is available.

Glass former addition is controlled by valving in the GFR system.

4.1.1.3.5 MFPV and MFV Cooling Jackets

Each LFP vessel is equipped with a clamp on jacket. Chilled water is supplied by the CHW system secondary loop.

4.1.1.3.6 LFP Vertical Pumps

The LFP vessels are equipped with vertical centrifugal pumps for process fluid transfer, emptying during/following a vessel cleaning process, and sampling. These pumps are mounted to the vessels in the LFP system with bolted flanges. A priming line that connects at the suction entrance will prime the pump for pump start-up. The impeller and casing sit inside the vessel head. The only path for waste if the pump seals fail is back into the vessel; thereby preventing liquids or gases from the vessel to affect personnel or to the environment.

Lubrication is provided from electro-lube motor operated lubrication devices that provide lubrication equivalent to the bi-monthly lubrication recommended by the pump manufacturer. These devices are self-contained, microprocessor controlled, motor driven automatic lubrication dispensers equipped with batteries for power and a reservoir sufficient to operate for 24 months at the expected lubrication rate.

For a full break down of material types for the suction pipe, impeller, and other pump components, refer to the bill of materials located in 24590-CM-POA-MPC0-00003-03-00003.

The vertical pumps transfer melter feed or plant wash through the LFP valve bulges to the chosen destination vessel. LFP-PMP-00001A/B and LFP-PMP-00002 transfer through bulge LFP-BULGE-00001, and LFP-PMP-00003A/B and LFP-PMP-00004 transfer through bulge LFP-BULGE-00002. The vertical pumps and transfer lines are flushed with 1.5 pipe volumes of demineralized water after every pump shutdown. If the tank level is below the pump impeller, the pump can be primed and started by using the priming line provided which is fed with demineralized water.

4.1.1.3.7 LFP ADS Pumps

Each LAW melter is fed with six ADS feed pumps (total) or two ADS feed pumps per each of the three melter zones. Control of the six ADS pumps is coordinated to provide uniform feed delivery and helps maintain/establish cold cap integrity. ADS pumps are designed with built-in redundancy. The melter is designed to allow one feed nozzle/ADS pump combination per melter zone to be inoperable.

The ADS pump is a chamber near the bottom of the MFV. Each ADS pump has a corresponding vent valve assembly and an actuator assembly. The bottom of the chamber is hinged to open by the actuator assembly to fill the chamber with slurry. After the bottom of the chamber is closed, air is supplied through the vent valve assembly to pressurize the chamber. The slurry is transferred to the melter using the plant service air pressure as the motive force. The air blows the line clear of feed with each pump stroke. Other physical configuration attributes of the melter feed system which prevent a sustained siphoning of feed slurry into the melters (i.e., line size, elevated routing) are addressed in the LMP system description. The nominal total melter feed for each set (all 6 ADS pumps for a melter) of pumps is 195 gallons per hour (~3.4 gpm).

4.1.1.3.8 Instrumentation and Controls

The MFPVs, MFVs, ADS control racks and associated bulges are equipped with instrumentation. The data is collected by the sensing elements, which are located in the vessels, control racks, or the bulges. The signals are sent to the transmitters, which are located in instrument racks on the 28 ft, 0 in. level.

The PCJ is a plant-wide system for monitoring and control of the process, ventilation, and services within the PT, HLW, and LAW facilities. The PCJ is an integral part of the Integrated Control Network and provides the following non-safety functions:

- Monitoring of independent protection trips
- Device interlocks

The PCJ also provides startup initiation, status monitoring, and shutdown initiation of independently controlled services and utilities. This allows remote operation of the equipment located in-cave/cell. The PPJ is the plant-wide system for monitoring and control of the safety designated instrumentation and controls. This system works independently of the PCJ.

A FCR will be located adjacent to the LAW facility. The FCR will be the primary control location for the associated facility.

4.1.2 Boundaries and Interfaces

The LCP boundaries with interfacing systems are as follows:

- The boundary limits (system interface) with the PT-PWD system are 5 ft outside the LAW building. The PT-PWD system includes the transfer lines from the PT Treated LAW Concentrate Storage Vessel.
- The boundary limits with the LFP system are at valves LFP-YV-1121 and LFP-YV-2121 in LCP-BULGE-00003 and at valves LFP-YV-1122 and LFP-YV-2122 in LCP-BULGE-00002.
- The boundary limits with the RLD system are at valve LFP-YV-2121 in LCP-BULGE-00003, at valve LFP-YV-2123 in LCP-BULGE-00002, and at the CRV overflow line connection to the overflow header feeding the C3/C5 drains/sump collection vessel RLD-VSL-00004.
- The boundary limits with the LVP system are at the ventilation outlet nozzles on the CRVs.
- The boundary limits with the DIW system are at the main isolation valves on piping entering the LCP bulges and cells.
- The boundary limits with the ISA system are at the isolation valves on piping entering the LCP bulges and cells.
- The boundary limits with the LVE system are at the terminal box.
- The boundary limits with the ASX system are located at the connection to the vendor package for ASX-SMPLR-00012 and ASX-SMPLR-00013.

The LFP boundaries with interfacing systems are as follows:

- Concentrate transfer lines from LCP system to the MFPVs starting at the inlet to valves LFP-YV-1121, -1122, -2121, and -2122.
- Glass former supply lines from the GFR system to the MFPVs starting at the outlet from valves GFR-YV-2001 and -2002.
- Melter feed lines from the MFVs to the LMP system ending at the outlet from the ADS pump discharge hose.

- Sample lines from the valve bulges to the ASX system ending at the inlet to the sampler and return lines starting at the outlet from the sampler.
- The boundary limits with the ASX system are located at the connection to the vendor package for ASX-SMPLR-00013 and ASX-SMPLR-00012
- Demineralized water supply lines from the DIW system to the MFPV vertical pumps starting at the inlet to valves LFP-V-02724, -02725, -02744, -02745; to the MFPV spray nozzles starting at the inlet to valves LFP-YV-1117, -1132, -2117, and -2132; to the MFPV overflow lines starting at the inlet to valves LFP-V-02601 and -02602; to the MFV vertical pumps starting at the inlet to valves LFP-V-02741 and -02732; to the MFV spray nozzles starting at the inlet to valves LFP-YV-1133, -1137, -1152, -2133, -2137, and -2152; to the MFV overflow lines starting at the inlet to valves LFP-V-02756 and -02757; to the ADS pump racks starting at the inlet to valves LFP-V-02607 and -02661; and to the valve bulges starting at the inlet to valves LFP-YV-1102 and -2102, and LFP-V-02591 and -02595.
- Plant air from the PSA system to the ADS pump racks starting at the inlet to valves LFP-V-02609 and -02663.
- Instrument air from the ISA system to the ADS pump racks starting at the inlet to valves LFP-V-02608 and -02662.
- Effluent lines from the valve bulges to the RLD system ending at the RLD inlet valves and at the inlet to sumps RLD-SUMP-00030 and -00032.
- Overflow lines from the MFPVs to the RLD system ending at the inlet to the overflow header.
- Vent lines from the MFPVs and MFVs to the LVP system ending at the outlet from the vessel nozzles.
- Cleaning, decontamination, and preparation to remove equipment from the wet process cell form the boundary limit for the RWH. The lifting/removal operation for equipment located in the wet process cell is where RWH takes over from the LFP.

4.1.3 LCP Interfacing Systems

The interfaces with the LCP system are listed in Table 4-1.

Table 4-1 LCP System Interfaces

System Locator	System Name	Nature of Interface
ASX	Autosampling	Receives samples from CRVs
DIW	Demineralized water	Supplies water for washdown of CRVs, flushing of LCP piping, and sealing of LCP pumps.
ISA	Instrument service air	Supplies air for CRV density instruments and valve actuators
LFP	LAW melter feed process	Receives feed concentrate from CRVs
LVE	Low voltage electrical	Supplies power for LCP pumps and agitators
LVP	LAW secondary off-gas/vessel vent process	Supplies vacuum for CRVs
PCJ	Process Control System	Provides operational control of the process instruments and equipment
PSA	Plant Service Air	Provides air for air purge
RLD	Radioactive liquid waste disposal	Receives washdowns, overflows, and off-specification feeds from CRVs
TCP	Treated LAW concentrate storage process	Supplies LAW concentrate to CRVs via the PT-PWD transfer lines

4.1.3.1 Autosampler

The blended vessel contents are pumped into the transfer header from either LCP-VSL-00001 using LCP-PMP-00001A/B or LCP-VSL-00002 using LCP-PMP-00002A/B and routed to the autosampler (ASX-SMPLR-00013). The sampling device is located outside the cell in a shielded but accessible location on the 48 ft, 0 in. level. The solution circulates through the autosampler and back into the vessel for a specified amount of time. At required intervals the sampler diverts a portion of the concentrate into a sample vial. The pump and transfer piping are designed to ensure the liquid in the sample remains well-mixed and the solids remain in suspension between the vessel and the autosampler. Samples are analyzed in lab systems ARL and AHL. The results of analysis are uploaded, recorded, and made available to the operators through the LIMS.

4.1.3.2 Air Purge Equipment

Each CRV has air purge provided by lines from the PSA system. This purge removes flammable gasses toxic emissions generated by the waste and works in conjunction with the vessel vent to route these gasses to the LVP vent header. LVP and LOP systems then filter and process the emissions prior to release to the atmosphere. The PSA air purge line is equipped with an orifice and needle valve to regulate air flow into the CRVs. A flow meter placed on the air purge line after the needle valve allows setting the needle valve to get the desired flow; as well as, to monitor and trigger alarms on low air flow to the LCP vessels. The PSA system has a connection for a portable air compressor to be used as a back-up in the event of primary PSA supply failure.

4.1.3.3 Mechanical Handling Equipment

The LCP system does not use any mechanical handling equipment during normal operation. The LAW Process Area Bridge Crane (RWH-CRN-00008) is needed during the replacement of the pumps or agitators. The crane is located in the charge floor room L-0202, and can remove floor hatches to gain access to the process cells. The crane can then be used to remove the pumps or agitators.

4.1.3.4 Electrical Description

Power for the LCP system will be provided by the plant LVE system via non safety, 480V ac motor control centers. All motors will be monitored for current load.

4.1.3.5 TCP System

The LAW concentrate receipt system interfaces with the TCP system via three transfer pipelines (one duty, one standby, and one spare) that supply feed to the LAW concentrate receipt vessels. On the downstream side, the LAW concentrate receipt system interfaces with the LFP system via the transfer lines to the MFPVs.

4.1.4 LFP Interfacing Systems

The interfaces with the LFP system are listed in Table 4-2.

Table 4-2 LFP Interfacing Systems

System Locator	System Name	Nature of Interface
ASX	Autosampling System	ASX-SMPLR-00012 and -00013 receive waste samples from MFPVs and MFVs.
DIW	Demineralized Water System	DIW-TK-00003 supplies demineralized water to MFPVs and MFVs for washdowns and concentrate dilution, to LFP pumps for flushes, to ADS pumps for flushes, and to LFP valve bulges for washdowns and line flushes.
GFR	Glass Formers Reagent System	GFR-TK-00022 and -00023 supply glass formers to MFPVs.
ISA	Instrument Service Air System	ISA-VSL-00003 supplies instrument air to LFP instruments and control valves.
LCP	LAW Concentrate Receipt Process System	LCP-VSL-00001 and -00002 supply LAW concentrate to MFPVs.
LMP	LAW Melter Process System	LMP-MLTR-00001 and -00002 receive melter feed from MFVs.
LOP	LAW Primary Offgas System	LOP-SCB-00001 and 00002 are interlocked to the ADS feed pumps to shut down associated melter when SBS indicates low level.
LVE	Low Voltage Electrical System	LVE-MCC-20201, -20202, -20203, and -20204 supply power to LFP pumps and agitators.
LVP	LAW Secondary Offgas/Vessel Vent Process System	Vessel vent header receives vents from MFPVs and MFVs.
PCJ	Process Control System	Components without SC/SS functions receive control signals.
PPJ	Programmable Protection System	Performs safety instrumented functions.
PSA	Plant Service Air System	PSA-VSL-00006 supplies plant air to ADS pumps and vessel purge.
RLD	Radioactive Liquid Waste Disposal System	RLD-VSL-00003 receives off-spec batches and washdowns from MFPVs and MFVs. RLD-VSL-00004 receives overflows from MFPVs and MFVs.
RWH	Radioactive Waste Handling System	RWH-CRN-00008 provides the lifting capabilities to remove and replace LFP vessels and components. Removal and packaging of equipment from the wet process cell is within the scope of the RWH.

4.1.4.1 Autosampler

The blended waste can be sampled by routing the feed from LFP transfer/sampling pumps to the sampler associated with the transfer bulge those pumps are associated with. Pumps LFP-PMP-00001A/B (in LFP-VSL-00001) and LFP-PMP-00002 (in LFP-VSL-00002) feed to the transfer header in LFP-BULGE-00001 which routes to ASX-SMPLR-00013. Pumps LFP-PMP-00003A/B (in LFP-VSL-00003) and LFP-PMP-00004 (in LFP-VSL-00004) feed to the transfer header in LFP-BULGE-00002 which routes to ASX-SMPLR-00012. The sampling device is located outside the cell in a shielded but accessible location on the 48 ft, 0 in. level. The solution circulates through the autosampler and back into the sending vessel, by means of valving in the bulge associated with the sending vessel, for a specified amount of time. At designated time intervals, the sampler diverts a portion of the concentrate into a sample vial. The pump and transfer piping are designed to ensure the liquid in the sample remains well-mixed and the solids remain in suspension between the vessel and the autosampler. Seals for the sampling points are designed to withstand the total dynamic head of the sampling pumps. The ASJ controls the taking and dispatch of samples.

4.1.4.2 Mechanical Handling

The LFP system does not use any mechanical handling equipment during normal operations. The LAW process area bridge crane (RWH-CRN-00008) is used during the replacement of components contained in the wet process cell. This system is used to remove components from the wet process cell, package them for transfer, and remove them from the law facility.

4.1.4.3 Electrical

Power for the LFP system is provided by the LVE system via 480V ac MCCs. All motors are monitored at the operator workstation for current load. Upon loss of offsite power, the 13.8kV standby diesel generator will start automatically and initiate load sequencing to restart the agitators.

4.1.5 Reserved

4.1.6 Principles of Operation

The LAW process is designed to vitrify the liquid portion of DOE tank farm wastes (designated Envelopes A, B, and C) that have undergone ultrafiltration, cesium removal, and evaporation in the PT facility. The wastes are grouped into envelopes based on the waste characteristics. Envelope A wastes are low sulfate wastes and make up the bulk of the waste tanks. Envelope B includes high sulfate wastes, and Envelope C includes high organic wastes. The envelopes are further divided based on similar compositions of the waste in each DST. As more DSTs are characterized, more waste envelopes will be developed.

The LAW concentrate properties will vary depending on which waste tank is being processed and on the sodium molarity. Target molarities are based on rheology and saturation operating restrictions. The physical and chemical process operating conditions are documented in LCP process calculations. Agitation of the waste maintains the waste, fed in from TCP, at its initial temperature. This prevents solids dissolved in solution from crystallizing and precipitating.

The LAW vitrification facility equipment is sized to support a glass production rate of 30 MTG/d. Each CRV, MFPV, and MFV is sized to support a glass production rate of 15 MTG/d per melter. A process schematic for a single set of receipt and feed vessels is provided in Figure 4-2. A simplified diagram for the melter feed process reflecting both sets of feed vessels is provided in Figure 4-3.

Figure 4-2 Process Schematic for a Single CRV, MFPV and MFV

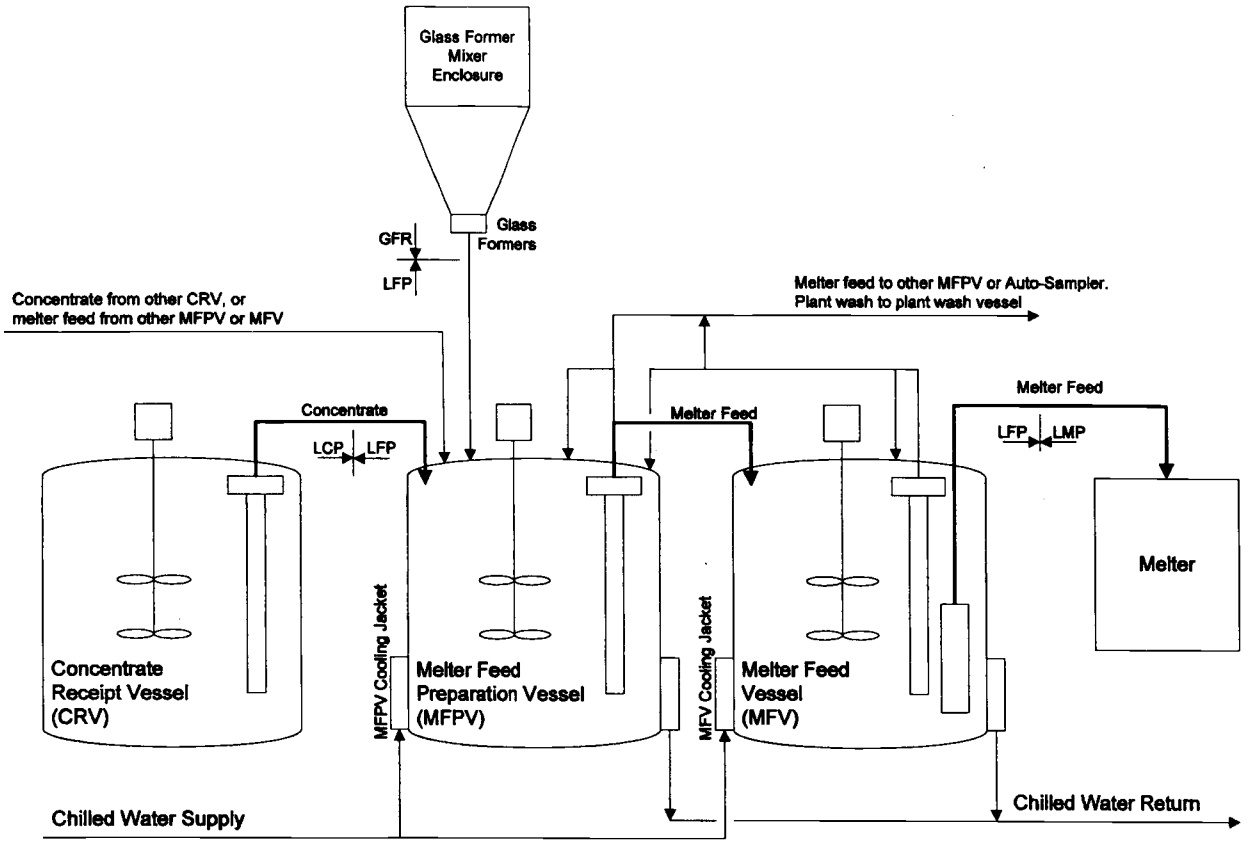

Figure 4-3 Simplified Diagram of the Melter Feed Process

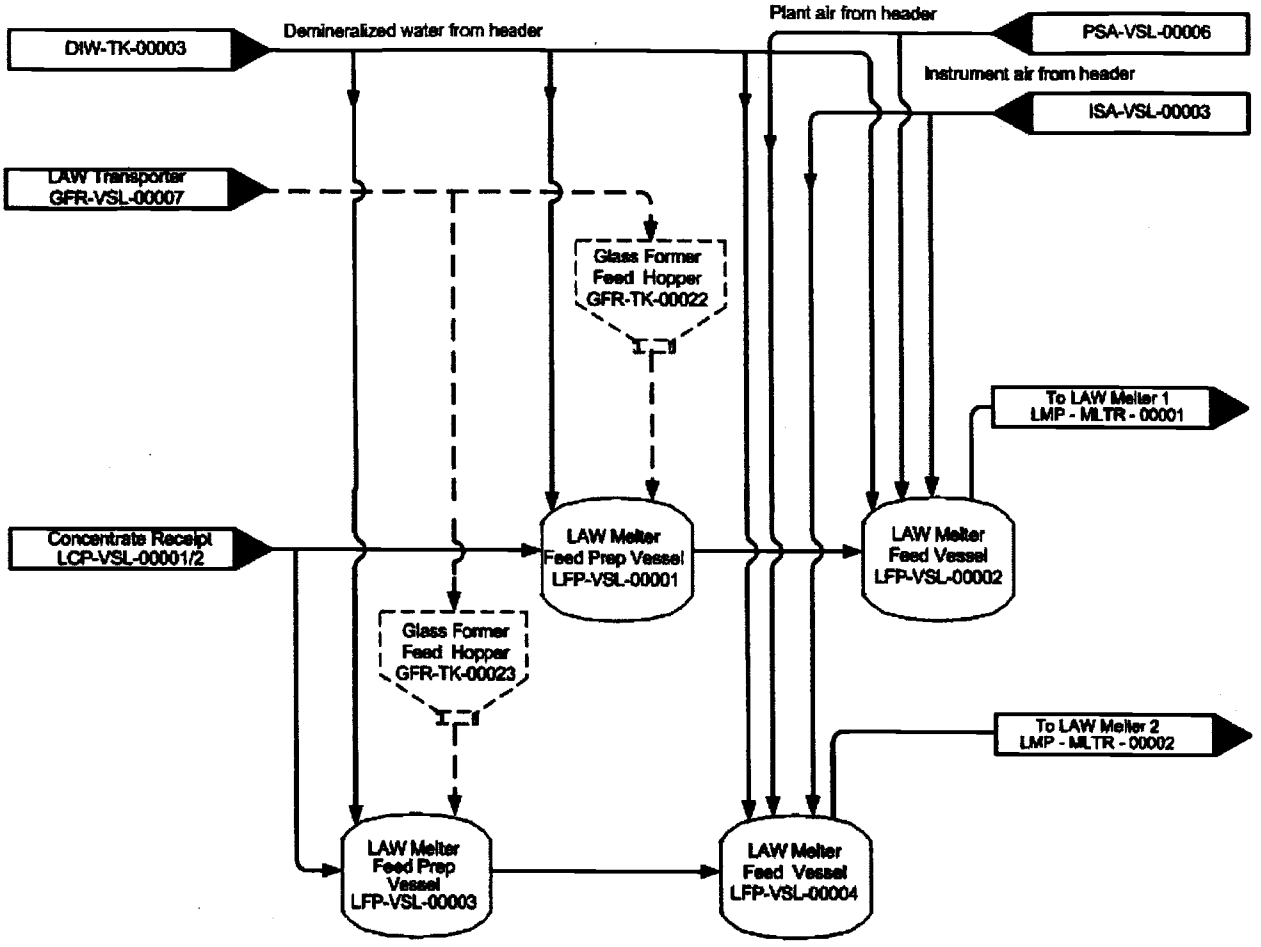

Each CRV is sized to hold a minimum of four MFPV batches of LAW concentrate. Before the first LAW concentrate batch is transferred to a MFPV, the CRV contents are thoroughly mixed and sampled. The sample is analyzed to confirm the chemical and radionuclide composition. A product control algorithm sets the amount of LAW concentrate and glass formers required to prepare a batch of melter feed that meets target ILAW compositions. This glass former recipe is entered into the PCJ. A single batch of glass formers is prepared at the glass former storage facility and transferred to the glass former mixer enclosures located in the LAW vitrification facility.

The LFP system is designed to provide continuous feed to both melters with each melter receiving two 16-hour duration batches. The CRV vessels are used in series16-hour duration batches. This means that while one CRV is filled and sampled the other CRV is feeding both melters. Therefore, one CRV will be filled every 32 hours (based on 4 batches for 2 MFPVs on a cycle time of 16 hours). This 32-hour fill to empty time for the CRV is more than sufficient to support the anticipated 20-hour sample time. While batch size will vary with the feed composition, the batch capacity of 9,115 gallons can accommodate a wide variety of waste compositions and cycle times while still providing adequate sample time and maintaining the total LAW production throughput of 30 MTG/day (15 MTG/day per melter).

A batch of sampled LAW concentrate is transferred to a MFPV from one of the two CRVs. Once the transfer is complete and the CRV sample analyses are available, the glass formers are added to the MFPV from the corresponding mixer enclosure. The glass former batch may consist of any of the following glass formers: aluminum silicate, boric acid, calcium silicate, ferric oxide, lithium carbonate, magnesium silicate, silica, sodium carbonate, sucrose, titanium dioxide, zinc oxide, zirconium silicate. The glass formers are mixed with the LAW concentrate using mechanical agitation. The volume and ratios of glass formers was determined based on the samples drawn from the LCP CRV vessels which provided the information for the glass algorithm. A sample is drawn from the MFPV to confirm that the glass formers were added in the correct ratios based on the resultant feed composition. The analytes measured will be the major cations, anions, and sugar that affect glass quality. This sample is not a hold point since the change in feed composition is gradual and a single transfer from the MFPV to the MFV is not expected to cause an upset in the melter. Batch cycle time will vary from batch to batch depending on the concentration of sodium in the concentrate and the waste loading of the glass.

A batch of melter feed is transferred from the MFPV to the corresponding MFV. Although a sample can be obtained and analyzed from the MFV, this is a non-routine sample point for product compliance purposes. The ADS pumps transfer the slurry from the MFV to the melter at a continuous rate.

To maintain a homogenous mixture in the vessel the agitators will normally be run continuously, but in the event of a loss of power or other failure that results in a loss of agitation the time to remix the vessel will depend on the waste contained in the vessel and whether or not the glass formers have been added. Prior to glass former addition pretreated waste in the MFPV would need to be mixed for a minimum of 35 minutes to homogenize the fluid in the vessel. Once glass formers have been added the minimum time to homogenize the waste increases to 60 minutes. The time required to blend the glass formers and sucrose into the waste feed is dependent on the waste fluid properties; based on the high bound LAW simulant testing performed the maximum time required to fully blend the glass formers into the waste is 44 minutes after final glass former addition.

High nitrate feed concentrate requires the addition of a reductant in order to control melter foaming. Sugar (sucrose) has been selected as the baseline reductant for WTP and is normally added with the glass formers. An alternate route is available to add sugar via a drum or wash cart connected to the demineralized water supply for the ADS pump racks. The waste (non-reagent) sodium concentration in the ILAW is the primary contract basis for determining waste loading. The waste loading in the glass is also strongly affected by the quantity of sulfate in the waste because sulfur is not soluble in the glass melt.

4.1.7 System Reliability Features

This information will be developed in the future.

4.1.8 System Control Features

4.1.8.1 Remote Continuous Controls

The LCP System does not have any remote continuous controls. The LFP remote continuous controls are shown below.

Table 4-3 Remote Continuous Controls for LAW LFP System

Equipment No.	Instrument No.	SAI	Function (CSR)	Remarks
LFP-PMP-00001A	LFP-HC-1128	-	Controls pump LFP-PMP-00001A by varying Speed Demand Output	
	LFP-HK-1166	-	Operator Adjusted Setpoint for pump LFP-PMP-00001A Totalized Flow (LFP-FQI-1166)	
LFP-PMP-00001B	LFP-HC-1130	-	Controls pump LFP-PMP-00001B by varying Speed Demand Output	
	LFP-HK-1167	-	Operator Adjusted Setpoint for pump LFP-PMP-00001B Totalized Flow (LFP-FQI-1167)	
LFP-PMP-00002	LFP-HC-1141	-	Controls pump LFP-PMP-00002 by varying Speed Demand Output	
	LFP-HK-1168	-	Operator Adjusted Setpoint for pump LFP-PMP-00002 Totalized Flow (LFP-FQI-1168)	
LFP-PMP-00003A	LFP-HC-2128	-	Controls pump LFP-PMP-00003A by varying Speed Demand Output	
	LFP-HK-2166	-	Operator Adjusted Setpoint for pump LFP-PMP-00003A Totalized Flow (LFP-FQI-2166)	
LFP-PMP-00003B	LFP-HC-2130	-	Controls pump LFP-PMP-00003B by varying Speed Demand Output	
	LFP-HK-2167	-	Operator Adjusted Setpoint for pump LFP-PMP-00003B Totalized Flow (LFP-FQI-2167)	
LFP-PMP-00004	LFP-HC-2141	-	Controls pump LFP-PMP-00004 by varying Speed Demand Output	
	LFP-HK-2168	-	Operator Adjusted Setpoint for pump LFP-PMP-00004 Totalized Flow (LFP-FQI-2168)	
LFP-BULGE-00001 (Melter 1 Feed/Preparation Valve Bulge)	LFP-HK-1102	-	Operator Adjusted Setpoint for valve LFP-YV-1102 Flush Time	
LFP-BULGE-00002 (Melter 2 Feed/Preparation Valve Bulge)	LFP-HK-2102	-	Operator Adjusted Setpoint for valve LFP-YV-2102 Flush Time	

4.1.8.2 Remote Discrete Controls

Table 4-4 Remote Discrete (On/Off) Controls for LAW LCP System

Equipment No.	Instrument No.	Properties	Function (CSR)	Remarks
LCP-VSL-00001 (Concentrate Receipt Vessel)	LCP-HS-0131	-	LCP-VSL-00001 Level Transmitter LCP-LT-0131/0139 Hi-Select Switch	
	LCP-YC-0120	-	Opens & Closes LCP-YV-0120	
	LCP-YC-0143	-	Opens & Closes LCP-YV-0143	
	LCP-YC-0102	-	Opens & Closes LCP-YV-0102	
	LCP-YC-0106	-	Opens & Closes LCP-YV-0106	

Table 4-4 Remote Discrete (On/Off) Controls for LAW LCP System

Equipment No.	Instrument No.	Properties	Function (CSR)	Remarks
	LCP-YC-0107	-	Opens & Closes LCP-YV-0107	
	LCP-YC-0109	-	Opens & Closes LCP-YV-0109	
	LCP-HS-0144	-	Starts & Stops Bubbler LCP-DT-0144/ LCP-PT-0147 Flush and Purge Sequence	
	LCP-YC-0144A	-	Opens & Closes LCP-YV-0144A	
	LCP-YC-0144B	-	Opens & Closes LCP-YV-0144B	
LCP-PMP-00001A	LCP-YC-0135	-	Starts & Stops LCP-PMP-00001A	
	LCP-YC-0150	-	Opens & Closes LCP-YV-0150	
	LCP-YC-0156	-	Opens & Closes LCP-YV-0156	
	LCP-YC-0119	-	Opens & Closes LCP-YV-0119	
LCP-PMP-00001B	LCP-YC-0137	-	Starts & Stops LCP-PMP-00001B	
	LCP-YC-0152	-	Opens & Closes LCP-YV-0152	
	LCP-YC-0157	-	Opens & Closes LCP-YV-0157	
	LCP-YC-0121	-	Opens & Closes LCP-YV-0121	
LCP-PMP-00001A/B	LCP-YC-0118	-	Opens & Closes LCP-YV-0118	
	LCP-YC-0115	-	Opens & Closes LCP-YV-0115	
LCP-AGT-00001	LCP-YC-0133	-	Starts & Stops LCP-AGT-00001	
LCP-BULGE-00001	LCP-YC-0108	-	Opens & Closes LCP-YV-0108	
	LCP-YC-0230	-	Opens & Closes LCP-YV-0230	
	LCP-YC-0104	-	Opens & Closes LCP-YV-0104	
LCP-BULGE-00002	LCP-YC-0123	-	Opens & Closes LCP-YV-0123	
	LCP-YC-0117	-	Opens & Closes LCP-YV-0117	
LCP-NOZ-00001	LCP-YC-0128	-	Opens & Closes LCP-YV-0128	
LCP-NOZ-00002	LCP-YC-0129	-	Opens & Closes LCP-YV-0129	
LCP-VSL-00005	LCP-YC-0153	-	Opens & Closes LCP-YV-0153	
LCP-VSL-00002	LCP-HS-0233	-	LCP-VSL-00002 Level Transmitter LCP-LT-0233/0252 Hi-Select Switch	
	LCP-YC-0207	-	Opens & Closes LCP-YV-0207	
	LCP-YC-0258	-	Opens & Closes LCP-YV-0258	
	LCP-HS-0259	-	Starts & Stops Bubbler LCP-DT-0259/ LCP-PT-0266 Flush and Purge Sequence	
	LCP-YC-0259A	-	Opens & Closes LCP-YV-0259A	
	LCP-YC-0259B	-	Opens & Closes LCP-YV-0259B	
LCP-PMP-00002A	LCP-YC-0236	-	Starts & Stops LCP-PMP-00002A	
	LCP-YC-0271	-	Opens & Closes LCP-YV-0271	
	LCP-YC-0278	-	Opens & Closes LCP-YV-0278	

Table 4-4 Remote Discrete (On/Off) Controls for LAW LCP System

Equipment No.	Instrument No.	Properties	Function (CSR)	Remarks
	LCP-YC-0206	-	Opens & Closes LCP-YV-0206	
LCP-PMP-00002B	LCP-YC-0238	-	Starts & Stops LCP-PMP-00002B	
	LCP-YC-0273	-	Opens & Closes LCP-YV-0273	
	LCP-YC-0277	-	Opens & Closes LCP-YV-0277	
	LCP-YC-0208	-	Opens & Closes LCP-YV-0208	
LCP-AGT-00002	LCP-YC-0235	-	Starts & Stops LCP-AGT-00002	
LCP-BULGE-00003	LCP-YC-0205	-	Opens & Closes LCP-YV-0205	
	LCP-YC-0209	-	Opens & Closes LCP-YV-0209	
	LCP-YC-0201	-	Opens & Closes LCP-YV-0201	
	LCP-YC-0204	-	Opens & Closes LCP-YV-0204	
LCP-NOZ-00003	LCP-YC-0229	-	Opens & Closes LCP-YV-0229	
LCP-NOZ-00004	LCP-YC-0228	-	Opens & Closes LCP-YV-0228	
LCP-VSL-00006	LCP-YC-0274	-	Opens & Closes LCP-YV-0274	
LCP-RK-00001	LCP-YC-0001	-	Opens & Closes LCP-YV-0001	
LCP-RK-00002	LCP-YC-0002	-	Opens & Closes LCP-YV-0002	

Table 4-5 Remote Discrete (On/Off) Control for LAW LFP System

Equipment No.	Instrument No.	SAI	Function (CSR)	Remarks
LFP-VSL-00001 (Melter 1 Feed Preparation Vessel)	LFP-YC-1117	-	Opens & Closes LFP-YV-1117, Melter 1 Feed Preparation Vessel Demineralized Water Spray Valve	
	LFP-YC-1127	-	Starts & Stops LFP-AGT-00001, Melter 1 Feed Preparation Vessel Agitator	
	LFP-YC-1128	-	Starts & Stops LFP-PMP-00001A, Melter 1 Feed Preparation Vessel Pump	
	LFP-YC-1130	-	Starts & Stops LFP-PMP-00001B, Melter 1 Feed Preparation Vessel Pump	
	LFP-YC-1132	-	Opens & Closes LFP-YV-1132, Melter 1 Feed Preparation Vessel Demineralized Water Spray Valve	
	LFP-YC-1163	-	Opens & Closes LFP-YV-1163, LFP-PMP-00001A DIW Priming Valve	
	LFP-HS-1171	-	Pump LFP-PMP-00001A Start Switch • Auto Opens LFP-YV-1163 • Auto Closes LFP-YV-1163 after a preset time • If LFP-YV-1163 is in Manual, override Closes LFP-YV-1164 after a preset time	
	LFP-YC-1164	-	Opens & Closes LFP-YV-1164, LFP-PMP-00001B DIW Priming Valve	

Table 4-5 Remote Discrete (On/Off) Control for LAW LFP System

Equipment No.	Instrument No.	SAI	Function (CSR)	Remarks
	LFP-HS-1172	-	Pump LFP-PMP-00001B Start Switch • Auto Opens LFP-YV-1164 • Auto Closes LFP-YV-1164 after a preset time • If LFP-YV-1164 is in Manual, override Closes LFP-YV-1164 after a preset time	
	LFP-YC-1154A	-	Opens & Closes LFP-YV-1154A, Bubbler LFP-PT-1159/LFP-DT-1154 Flush Valve	
	LFP-YC-1154B	-	Opens & Closes LFP-YV-1154B, Bubbler LFP-PT-1159/LFP-DT-1154 Purge Valve	
	LFP-HS-1154	-	Starts and Stops Bubbler LFP-PT-1159/LFP-DT-1154 Flush and Purge Sequence	
	LFP-HS-1124	-	High Selector Switch for LFP-VSL-00001 Level (LFP-LI-1124/LFP-LI-1140)	
	LFP-YC-1121	-	Opens & Closes LFP-YV-1121, Melter 1 Feed Preparation Vessel - Concentrate Vessel 2 Valve	
	LFP-YC-1122	-	Opens & Closes LFP-YV-1122, Melter 1 Feed Preparation Vessel - Concentrate Vessel 1 Valve	
LFP-VSL-00002 (Melter 1 Feed Vessel)	LFP-YC-1133	-	Opens & Closes LFP-YV-1133, Melter 1 Feed Vessel DIW Spray Valve	
	LFP-YC-1137	-	Opens & Closes LFP-YV-1137, Melter 1 Feed Vessel DIW Spray Valve	
	LFP-YC-1141	-	Starts & Stops LFP-PMP-00002, Melter 1 Feed Vessel Pump	
	LFP-YC-1143	-	Starts & Stops LFP-AGT-00002, Melter 1 Feed Vessel Agitator	
	LFP-YC-1152	-	Opens & Closes LFP-YV-1152, Melter 1 Feed Vessel DIW Spray Valve	
	LFP-YC-1165	-	Opens & Closes LFP-YV-1165, PMP-00002 DIW Priming Valve	
	LFP-HS-1173	-	Pump LFP-PMP-00002 Start Switch • Auto Opens LFP-YV-1165 • Auto Closes LFP-YV-1165 after a preset time	
	LFP-YC-1207A	-	Opens & Closes LFP-YV-1207, Melter 1 ADS Pump DIW Supply Valve	
	LFP-YC-1207B	SS	Opens & Closes LFP-YV-1207, Melter 1 ADS Pump DIW Supply Valve	
	LFP-YC-1208A	-	Opens & Closes LFP-YV-1208, Melter 1 ADS Pump PSA Supply Valve	
	LFP-YC-1208B	SS	Opens & Closes LFP-YV-1208, Melter 1 ADS Pump PSA Supply Valve	
	LFP-HS-9001	SS	LFP-LSHH-1145Z Vessel Level High High Manual Activation Switch	
	LFP-HS-9002	SS	LFP-LSHH-1145Z Vessel Level High High Reset Switch	

Table 4-5 Remote Discrete (On/Off) Control for LAW LFP System

Equipment No.	Instrument No.	SAI	Function (CSR)	Remarks
	LFP-YC-1157A	-	Opens & Closes LFP-YV-1157A, Bubbler LFP-PT-1160/LFP-DT-1157 Flush Valve	
	LFP-YC-1157B	-	Opens & Closes LFP-YV-1157B, Bubbler LFP-PT-1160/LFP-DT-1157 Purge Valve	
	LFP-HS-1157	-	Starts and Stops Bubbler LFP-PT-1160/LFP-DT-1157 Flush and Purge Sequence	
LFP-BULGE-00001 (Melter 1 Feed/Preparation Valve Bulge)	LFP-YC-1102	-	Opens & Closes LFP-YV-1102, Melter 1 Feed Preparation Bulge Main Demineralized Water Inlet Valve	
	LFP-YC-1103	-	Opens & Closes LFP-YV-1103, Melter 1 Feed/Preparation Bulge Bleed Valve	
	LFP-YC-1105	-	Opens & Closes LFP-YV-1105, Melter 1 Feed Vessel Demineralized Water Wash Valve	
	LFP-YC-1106	-	Opens & Closes LFP-YV-1106, Melter 1 Feed/Preparation Bulge LFP-VSL-00001 Return Valve	
	LFP-YC-1107	-	Opens & Closes LFP-YV-1107, Melter 1 Feed Preparation Vessel LFP-PMP-00001A Discharge Valve	
	LFP-YC-1108	-	Opens & Closes LFP-YV-1108, Melter 1 Feed Preparation Vessel LFP-PMP-00001B Discharge Valve	
	LFP-YC-1110	-	Opens & Closes LFP-YV-1110, Melter 1 Feed/Preparation Bulge LFP-VSL-00002 Return Valve	
	LFP-YC-1112	-	Opens & Closes LFP-YV-1112, Melter 1 Feed Vessel LFP-PMP-00002 Discharge Valve	
	LFP-YC-1115	-	Opens & Closes LFP-YV-1115, Melter 1 Feed Prep Vessel Demineralized Water Wash Valve	
	LFP-YC-1153	-	Opens & Closes LFP-YV-1153, Melter 1 Feed Vessel Sampler Valve	
	LFP-YC-1161	-	Opens & Closes LFP-YV-1161, Melter 1 Feed Preparation Vessel Sampler Return Valve	
	LFP-YC-1162	-	Opens & Closes LFP-YV-1162, Melter 1 Feed Vessel Sampler Return Valve	
	LFP-YC-2118	-	Opens & Closes LFP-YV-2118, Melter 2 Feed Preparation Vessel Melter 1 Return Valve	
LFP-VSL-00003 (Melter 2 Feed Preparation Vessel)	LFP-YC-2117	-	Opens & Closes LFP-YV-2117, Melter 2 Feed Preparation Vessel Demineralized Water Spray Valve	
	LFP-YC-2127	-	Starts & Stops LFP-AGT-00003, Melter 2 Feed Preparation Vessel Agitator	
	LFP-YC-2128	-	Starts & Stops LFP-PMP-00003A, Melter 2 Feed Preparation Vessel Pump	
	LFP-YC-2130	-	Starts & Stops LFP-PMP-00003B, Melter 2 Feed Preparation Vessel Pump	
	LFP-YC-2132	-	Opens & Closes LFP-YV-2132, Melter 2 Feed Preparation Vessel Demineralized Water Spray Valve	

Table 4-5 Remote Discrete (On/Off) Control for LAW LFP System

Equipment No.	Instrument No.	SAI	Function (CSR)	Remarks
	LFP-YC-2163	-	Opens & Closes LFP-YV-2163, PMP-00003A DIW Priming Valve	
	LFP-HS-2171	-	Pump LFP-PMP-00003A Start Switch • Auto Opens LFP-YV-2163 • Auto Closes LFP-YV-2163 after a preset time • If LFP-YV-2163 is in Manual, override Closes LFP-YV-2164 after a preset time	
	LFP-YC-2164	-	Opens & Closes LFP-YV-2164, PMP-00003B DIW Priming Valve	
	LFP-HS-2172	-	Pump LFP-PMP-00003B Start Switch • Auto Opens LFP-YV-2164 • Auto Closes LFP-YV-2164 after a preset time • If LFP-YV-2164 is in Manual, override Closes LFP-YV-2164 after a preset time	
	LFP-YC-2154A	-	Opens & Closes LFP-YV-2154A, Bubbler LFP-PT-2159/LFP-DT-2154 Flush Valve	
	LFP-YC-2154B	-	Opens & Closes LFP-YV-2154B, Bubbler LFP-PT-2159/LFP-DT-2154 Purge Valve	
	LFP-HS-2154	-	Starts and Stops Bubbler LFP-PT-2159/LFP-DT-2154 Flush and Purge Sequence	
	LFP-HS-2124	-	High Selector Switch for LFP-VSL-00003 Level (LFP-LI-2124/LFP-LI-2140)	
	LFP-YC-2122	-	Opens & Closes LFP-YV-2122, Melter 2 Feed Preparation Vessel - Concentrate Vessel 1 Valve	
	LFP-YC-2121	-	Opens & Closes LFP-YV-2121, Melter 2 Feed Preparation Vessel - Concentrate Vessel 2 Valve	
LFP-VSL-00004 (Melter 2 Feed Vessel)	LFP-YC-2133	-	Opens & Closes LFP-YV-2133, Melter 2 Feed Vessel DIW Spray Valve	
	LFP-YC-2137	-	Opens & Closes LFP-YV-2137, Melter 2 Feed Vessel DIW Spray Valve	
	LFP-YC-2141	-	Starts & Stops LFP-PMP-00004, Melter 2 Feed Vessel Pump	
	LFP-YC-2143	-	Starts & Stops LFP-AGT-00004, Melter 2 Feed Vessel Agitator	
	LFP-YC-2152	-	Opens & Closes LFP-YV-2152, Melter 2 Feed Vessel DIW Spray Valve	
	LFP-YC-2165	-	Opens & Closes LFP-YV-2165, PMP-00004 DIW Priming Valve	
	LFP-HS-2173	-	Pump LFP-PMP-00004 Start Switch • Auto Opens LFP-YV-2165 • Auto Closes LFP-YV-2165 after a preset time	
	LFP-YC-2207A	-	Opens & Closes LFP-YV-2207, Melter 2 ADS Pump DIW Supply Valve	

Table 4-5 Remote Discrete (On/Off) Control for LAW LFP System

Equipment No.	Instrument No.	SAI	Function (CSR)	Remarks
	LFP-YC-2207B	SS	Opens & Closes LFP-YV-2207, Melter 2 ADS Pump DIW Supply Valve	
	LFP-YC-2208A	-	Opens & Closes LFP-YV-2208, Melter 2 ADS Pump PSA Supply Valve	
	LFP-YC-2208B	SS	Opens & Closes LFP-YV-2208, Melter 2 ADS Pump DIW Supply Valve	
	LFP-HS-9011	SS	LFP-LSHH-2145Z Vessel Level High High Manual Activation Switch	
	LFP-HS-9012	SS	LFP-LSHH-2145Z Vessel Level High High Reset Switch	
	LFP-YC-2157A	-	Opens & Closes LFP-YV-2157A, Bubbler LFP-PT-2160/LFP-DT-2157 Flush Valve	
	LFP-YC-2157B	-	Opens & Closes LFP-YV-2157B, Bubbler LFP-PT-2160/LFP-DT-2157 Purge Valve	
	LFP-HS-2157	-	Starts and Stops Bubbler LFP-PT-2160/LFP-DT-2157 Flush and Purge Sequence	
LFP-BULGE-00002 (Melter 2 Feed/Preparation Valve Bulge)	LFP-YC-2102	-	Opens & Closes LFP-YV-2102, Melter 2 Feed Preparation Bulge Main Demineralized Water Inlet Valve	
	LFP-YC-2103	-	Opens & Closes LFP-YV-2103, Melter 2 Feed/Preparation Bulge Bleed Valve	
	LFP-YC-2105	-	Opens & Closes LFP-YV-2105, Melter 2 Feed Vessel Demineralized Water Wash Valve	
	LFP-YC-2106	-	Opens & Closes LFP-YV-2106, Melter 2 Feed/Preparation Bulge LFP-VSL-00003 Return Valve	
	LFP-YC-2107	-	Opens & Closes LFP-YV-2107, Melter 2 Feed Preparation Vessel LFP-PMP-00003A Discharge Valve	
	LFP-YC-2108	-	Opens & Closes LFP-YV-2108, Melter 2 Feed Preparation Vessel LFP-PMP-00003B Discharge Valve	
	LFP-YC-2110	-	Opens & Closes LFP-YV-2110, Melter 2 Feed/Preparation Bulge LFP-VSL-00004 Return Valve	
	LFP-YC-2112	-	Opens & Closes LFP-YV-2112, Melter 2 Feed Vessel LFP-PMP-00004 Discharge Valve	
	LFP-YC-2115	-	Opens & Closes LFP-YV-2115, Melter 2 Feed Prep Vessel Demineralized Water Wash Valve	
	LFP-YC-2153	-	Opens & Closes LFP-YV-2153, Melter 2 Feed Vessel Sampler Valve	
	LFP-YC-2161	-	Opens & Closes LFP-YV-2161, Melter 2 Feed Preparation Vessel Sampler Return Valve	
	LFP-YC-2162	-	Opens & Closes LFP-YV-2162, Melter 2 Feed Vessel Sampler Return Valve	
	LFP-YC-1119	-	Opens & Closes LFP-YV-1119, Melter 1 Feed Preparation Vessel Melter 2 Return Valve	

4.1.8.3 Trips and Interlocks

Alarm setpoints and process trips are identified in CDI 24590-LAW-JDX-LCP-00001 and 24590-LAW-JDX-LFP-00001. Safety instrumented function trip setpoints are identified in the associated SSRS for the specific safety instrumented function.

Table 4-6 Trips and Interlocks for LAW LCP System

Equipment No.	Instrument No.	Properties	Function (CSR)	Remarks
LCP-VSL-00001	LCP-LSHH-0131A (LCP-LT-0131/ 0139)	-	LCP-VSL-00001 Level High High • Override Closes LCP-YV-0150 • Override Closes LCP-YV-0152 • Override Closes LCP-YV-0108 • Override Closes LCP-YV-0118 • Override Closes LCP-YV-0123 • Override Closes LCP-YV-0128 • Override Closes LCP-YV-0129 • Override Closes LCP-YV-0156 • Override Closes LCP-YV-0157 • Override Closes LCP-YV-0119 • Override Closes LCP-YV-0120 • Override Closes LCP-YV-0121	
	LCP-LSLL-0131A (LCP-LT-0131/ 0139)	-	LCP-VSL-00001 Level Low Low • Override Stops LCP-PMP-00001A • Override Stops LCP-PMP-00001B	
	LCP-LSLLL-0131A (LCP-LT-0131/ 0139)	-	LCP-VSL-00001 Level Low Low Low Override Stops LCP-AGT-00001	
LCP-PMP-00001A	LCP-YC-0135_RNG	-	LCP-PMP-00001A Not Running Override Closes LCP-YV-0119	
	LCP-LS-0149	-	LCP-PMP-00001A Seal Level Low Override Stops LCP-PMP-00001A	
	LCP-FSLL-0158 (LCP-FT-0158)	-	LCP-PMP-00001A Flow Low Low Stops LCP-PMP-00001A if Running	
	LCP-FQSH-0158 (LCP-FT-0158)	-	LCP-PMP-00001A Flow Totalizer High Override Stops LCP-PMP-00001A	
	LCP-YC-0156_OPND	-	LCP-YV-0156 Not Open Override Stops LCP-PMP-00001A	
LCP-PMP-00001B	LCP-YC-0137_RNG	-	LCP-PMP-00001A Not Running Override Closes LCP-YV-0121	
	LCP-LS-0151	-	LCP-PMP-00001B Seal Level Low Override Stops LCP-PMP-00001B	
	LCP-FSLL-0159 (LCP-FT-0159)	-	LCP-PMP-00001B Flow Low Low Override Stops LCP-PMP-00001B if Running	
	LCP-FQSH-0159 (LCP-FT-0159)	-	LCP-PMP-00001B Flow Totalizer High Override Stops LCP-PMP-00001B	

Table 4-6 Trips and Interlocks for LAW LCP System

Equipment No.	Instrument No.	Properties	Function (CSR)	Remarks
	LCP-YC-0157_OPND	-	LCP-YV-0157 Not Open Override Stops LCP-PMP-00001B	
LCP-PMP-00001A/B Header	LCP-PSHH-0142 (LCP-PT-0142)	-	LCP-PMP-00001A/B Header Pressure High High • Override Stops LCP-PMP-00001A • Override Stops LCP-PMP-00001B	
LCP-VSL-00005	LCP-PSH-0154 (LCP-PT-0154)	-	LCP-VSL-00005 Pressure High Auto Closes LCP-YV-0153	
	LCP-PSL-0154 (LCP-PT-0154)	-	LCP-VSL-00005 Pressure Low Auto Opens LCP-YV-0153	
	LCP-PSLL-0154 (LCP-PT-0154)	-	LCP-VSL-00005 Pressure Low Low • Override Stops LCP-PMP-00001A • Override Stops LCP-PMP-00001B	
LCP-VSL-00002	LCP-LSHH-0233A (LCP-LT-0233/ 0252)	-	LCP-VSL-00002 Level High High • Override Closes LCP-YV-0271 • Override Closes LCP-YV-0272 • Override Closes LCP-YV-0230 • Override Closes LCP-YV-0205 • Override Closes LCP-YV-0209 • Override Closes LCP-YV-0228 • Override Closes LCP-YV-0229 • Override Closes LCP-YV-0277 • Override Closes LCP-YV-0278 • Override Closes LCP-YV-0206 • Override Closes LCP-YV-0207 • Override Closes LCP-YV-0208	
	LCP-LSLL-0233A (LCP-LT-0233/ 0252)	-	• LCP-VSL-00002 Level Low Low • Override Stops LCP-PMP-00002A • Override Stops LCP-PMP-00002B	
	LCP-LSLLL-0233A (LCP-LT-0233/ 0252)	-	LCP-VSL-00002 Level Low Low Low Override Stops LCP-AGT-00002	
LCP-PMP-00002A	LCP-YC-0236_RNG	-	LCP-PMP-00002A Not Running Override Closes LCP-YV-0206	
	LCP-LS-0270	-	LCP-PMP-00002A Seal Level Low Override Stops LCP-PMP-00002A	
	LCP-FSLL-0279 (LCP-FT-0279)	-	LCP-PMP-00002A Flow Low Low Override Stops LCP-PMP-00002A if Running	
	LCP-FQSH-0279 (LCP-FT-0279)	-	LCP-PMP-00002A Flow Totalizer High Override Stops LCP-PMP-00002A	
	LCP-YC-0278_OPND	-	LCP-YV-0278 Not Open Override Stops LCP-PMP-00002A	

Table 4-6 Trips and Interlocks for LAW LCP System

Equipment No.	Instrument No.	Properties	Function (CSR)	Remarks
LCP-PMP-00002B	LCP-YC-0238_RNG	-	LCP-PMP-00002B Not Running Override Closes LCP-YV-0208	
	LCP-LS-0272	-	LCP-PMP-00002B Seal Level Low Override Stops LCP-PMP-00002B	
	LCP-FSLL-0280 (LCP-FT-0280)	-	LCP-PMP-00002B Flow Low Low Override Stops LCP-PMP-00002B if Running	
	LCP-FQSH-0280 (LCP-FT-0280)	-	LCP-PMP-00002B Flow Totalizer High Override Stops LCP-PMP-00002B	
	LCP-YC-0277_OPND	-	LCP-YV-0277 Not Open Override Stops LCP-PMP-00002B	
LCP-PMP-00002A/B Header	LCP-PSHH-0255 (LCP-PT-0255)	-	LCP-PMP-00002A/B Header Pressure High High • Override Stop LCP-PMP-00002A • Override Stop LCP-PMP-00002B	
LCP-VSL-00006	LCP-PSH-0275 (LCP-PT-0275)	-	LCP-VSL-00006 Pressure High Auto Closes LCP-YV-0274	
	LCP-PSL-0275 (LCP-PT-0275)	-	LCP-VSL-00006 Pressure Low Auto Opens LCP-YV-0274	
	LCP-PSLL-0275 (LCP-PT-0275)	-	LCP-VSL-00006 Pressure Low Low • Override Stops LCP-PMP-00002A • Override Stops LCP-PMP-00002B	
RLD-VSL-00004	RLD-LSHH-2205A (RLD-LT-2205/ 2206)	-	RLD-VSL-00004 Level High High • Override Closes LCP-YV-0201 • Override Closes LCP-YV-0204 • Override Closes LCP-YV-0102 • Override Closes LCP-YV-0104 • Override Closes LCP-YV-0115 • Override Closes LCP-YV-0117	
LCP-VSL-00001/2 Inlet	LCP-YC-0108_CLSD & LCP-YC-0230_CLSD	-	LCP-YV-0108 Closed and LCP-YV-0230 Closed • Auto Closes TCP-YV-0023 • If TCP-YC-0023 in Manual, Override Closes TCP-YV-0023 • Auto Closes TCP-YV-0024 • If TCP-YC-0024 in Manual, Override Closes TCP-YV-0024	
PT Facility to LAW Transfer	TCP-YC-0023_CLSD	-	TCP-YV-0023 Closed Override Closes LCP-YV-0109	
	TCP-YC-0024_CLSD	-	TCP-YV-0024 Closed Override Closes LCP-YV-0107	
	TCP-YC-0023_CLSD	-	Both TCP-YV-0023 Closed and TCP-YV-0024 Closed	

Table 4-6 Trips and Interlocks for LAW LCP System

Equipment No.	Instrument No.	Properties	Function (CSR)	Remarks
	& TCP-YC-0024_CLSD		• Override Closes LCP-YV-0108 • Override Closes LCP-YV-0230	
LCP-RK-00001	LFP-HS-1154_START	-	Initiates LFP-DT-1154 Flush and Purge Sequence: Auto Opens then Auto Closes LCP-YV-0001	
	LFP-HS-1154_STOP	-	Stops LFP-DT-1154 Flush and Purge Sequence at any point: Auto Closes LCP-YV-0001	
	LFP-HS-1157_START	-	Initiates LFP-DT-1157 Flush and Purge Sequence: Auto Opens then Auto Closes LCP-YV-0001	
	LFP-HS-1157_STOP	-	Stops LFP-DT-1157 Flush and Purge Sequence at any point: Auto Closes LCP-YV-0001	
LCP-RK-00002	LFP-HS-2154_START	-	Initiates LFP-DT-2154 Flush and Purge Sequence: Auto Opens then Auto Closes LCP-YV-0002	
	LFP-HS-2154_STOP	-	Stops LFP-DT-2154 Flush and Purge Sequence at any point: Auto Closes LCP-YV-0002	
	LFP-HS-2157_START	-	Initiates LFP-DT-2157 Flush and Purge Sequence: Auto Opens then Auto Closes LCP-YV-0002	
	LFP-HS-2157_STOP	-	Stops LFP-DT-2157 Flush and Purge Sequence at any point: Auto Closes LCP-YV-0002	

Table 4-7 Trips and Interlocks for LAW LFP System

Equipment No.	Instrument No.	SAI	Function (CSR)	Remarks
LFP-VSL-00001 (Melter 1 Feed Preparation Vessel)	LFP-LSHH-1124A (LFP-LT-1124/1140)	-	LFP-VSL-00001 Level High High • Override Closes LFP-YV-1105 • Override Closes LFP-YV-1106 • Override Closes LFP-YV-1115 • Override Closes LFP-YV-1117 • Override Closes LFP-YV-1119 • Override Closes LFP-YV-1121 • Override Closes LFP-YV-1122 • Override Closes LFP-YV-1132 • Override Closes LFP-YV-1161 • Override Closes LFP-YV-1163 • Override Closes LFP-YV-1164 • Override Closes GFR-YV-2001	

Table 4-7 Trips and Interlocks for LAW LFP System

Equipment No.	Instrument No.	SAI	Function (CSR)	Remarks
	LFP-LSLL-1124A (LFP-LT-1124/1140)	-	LFP-VSL-00001 Level Low Low Override Stops LFP-AGT-00001	
	LFP-LSLLL-1124A (LFP-LT-1124/1140)	-	LFP-VSL-00001 Level Low Low Low • Override Stops LFP-PMP-00001A • Override Stops LFP-PMP-00001B	
	LFP-TSHH-1125 (LFP-TT-1125)	-	LFP-VSL-00001 Temperature High High Override Stops LFP-AGT-00001	
	LFP-YC-1127_RNG	-	Not Running Override Closes GFR-YV-2001	
LFP-PMP-00001A (Melter 1 Feed Preparation Pump)	LFP-YC-1163_OPND	-	• Auto Starts pump LFP-PMP-00001A • Auto Opens valve LFP-YV-1107	
	LFP-FSLL-1166 (LFP-FT-1166) AND LFP-YC-1128_RNG	-	Pump LFP-PMP-00001A Discharge Flow Low Low and LFP-PMP-00001A Running Override Stops LFP-PMP-00001A	
	LFP-FQSH-1166 (LFP-FT-1166) AND (LFP-YC-1161_OPND AND LFP-YC-1153_OPND) AND LFP-YC-1106_OPND	-	Pump LFP-PMP-00001A Discharge Totalizer Flow High, and at least one of LFP-VSL-00001 Sampler Return Path and LFP-VSL-00002 Sampler Feed Path not Open, and LFP-VSL-00001 Feed Return Valve not Open Auto Stops pump LFP-PMP-00001A	
	LFP-YC-1128_RNG	-	• When pump Not Running, Override Closes valve LFP-YV-1107 • Auto Closes valve LFP-YV-1163 after a preset time • Override Closes LFP-YV-1163 after a preset time when pump in Manual	
	LFP-YC-1107_OPND	-	When Not Open, Override Stops pump LFP-PMP-00001A	
LFP-PMP-00001B (Melter 1 Feed Preparation Pump)	LFP-YC-1164_OPND	-	• Auto Starts pump LFP-PMP-00001B • Auto Opens valve LFP-YV-1108	
	LFP-FSLL-1167 (LFP-FT-1167) AND LFP-YC-1130_RNG	-	Pump LFP-PMP-00001B Discharge Flow Low Low and LFP-PMP-00001B Running Override Stops LFP-PMP-00001B	

Table 4-7 Trips and Interlocks for LAW LFP System

Equipment No.	Instrument No.	SAI	Function (CSR)	Remarks
	LFP-FQSH-1167 (LFP-FT-1167) AND (LFP-YC-1161_OPND AND LFP-YC-1153_OPND) AND LFP-YC-1106_OPND	-	Pump LFP-PMP-00001B Discharge Totalizer Flow High, and at least one of LFP-VSL-00001 Sampler Return Path and LFP-VSL-00002 Sampler Feed Path not Open, and LFP-VSL-00001 Feed Return Valve not Open Auto Stops LFP-PMP-00001B	
	LFP-YC-1130_RNG	-	• When Pump Not Running, Override Closes LFP-YV-1108 • Auto Closes LFP-YV-1164 after a preset time • When in Manual, Override Closes LFP-YV-1164 after a preset time	
	LFP-YC-1108_OPND	-	Not Open Override Stops pump LFP-PMP-00001B	
LFP-VSL-00002 (Melter 1 Feed Vessel)	LFP-LSHH-1145Z (LFP-LT-1145Z)	SS	Melter 1 Anti-Siphon Level High High • Override Closes LFP-YV-1207 • Override Closes LFP-YV-1208	
	LFP-UAHH-1145Z (LFP-LT-1145Z)	SS	LFP-LSHH-1145Z Trip Alarm	
	LFP-LSHH-1146A (LFP-LT-1146)	-	LFP-VSL-00002 Level High High • Override Closes LFP-YV-1105 • Override Closes LFP-YV-1110 • Override Closes LFP-YV-1115 • Override Closes LFP-YV-1133 • Override Closes LFP-YV-1137 • Override Closes LFP-YV-1152 • Override Closes LFP-YV-1162 • Override Closes LFP-YV-1165 • Override Closes LFP-YV-1207 • Override Closes LFP-YV-1208	
	LFP-LSLL-1146A (LFP-LT-1146)	-	LFP-VSL-00002 Level Low Low Override Stops LFP-AGT-00002	

Table 4-7 Trips and Interlocks for LAW LFP System

Equipment No.	Instrument No.	SAI	Function (CSR)	Remarks
	LFP-LSLL-1146A (LFP-LT-1146)	-	LFP-VSL-00002 Level Low Low • Sequence Stops LFP-PMP-00007 • Sequence Stops LFP-PMP-00008 • Sequence Stops LFP-PMP-00009 • Sequence Stops LFP-PMP-00010 • Sequence Stops LFP-PMP-00011 • Sequence Stops LFP-PMP-00012	
	LFP-LSLLL-1146A (LFP-LT-1146)	-	LFP-VSL-00002 Level Low Low Low Override Stops LFP-PMP-00002	
	LFP-TSHH-1147 (LFP-TT-1147)	-	LFP-VSL-00002 Temperature High High Override Stops LFP-AGT-00002	
	LMP-PDSHH-1528Z (LMP-PDT-1528Z/1529Z)	SS	LMP Melter 1 Plenum Pressure High High • Override Closes LFP-YV-1207 • Override Closes LFP-YV-1208	
	LMP-PDSHH-1410A (LMP-PDT-1410/1411)	-	LMP Melter 1 Plenum Differential Pressure High High • Override Closes LFP-YV-1207 • Override Closes LFP-YV-1208	
	LOP-LSLL-1011Z OR LOP-LSHH-1011Z (LOP-LT-1011Z)	SS	Melter 1 SBS Level Low Low • Override Closes LFP-YV-1207 • Override Closes LFP-YV-1208	
	LMP-LSHH-1403A (LMP-LT-1403/1405)	-	LMP-BBLR-00055 Level High High Override Closes LFP-YV-1208	
LFP-VSL-00002/00004 (Melter 1/2 Feed Vessel)	LMP-TSHH-1637Z/2637Z (LMP-TT-1637Z/1638Z, 2637Z/2638Z)	SS	Melter 1 and 2 Lid Cooling Compartment Temperature High High • Override Closes LFP-YV-1207/2207 • Override Closes LFP-YV-1208/2208	
	UPE-YSLL-2303Z (UPE-YY-2303Z/2403Z/2503Z)	SS	UPE-UPS-20301/20302/20303 Loss of Power • Override Closes LFP-YV-1207/2207 • Override Closes LFP-YV-1208/2208	
	LVP-PDSHH-0502Z (LVP-PDT-0502Z/0504Z)	SS	LVP-SKID-00002 Differential Pressure High High • Override Closes LFP-YV-1207/2207 • Override Closes LFP-YV-1208/2208	
	LVP-PDSHH-0083Z (LVP-PDT-0083Z, -0084Z)	SS	LVP HEPA Filters Differential Pressure High High • Override Closes LFP-YV-1207/2207 • Override Closes LFP-YV-1208/2208	

Table 4-7 Trips and Interlocks for LAW LFP System

Equipment No.	Instrument No.	SAI	Function (CSR)	Remarks
	LVP-FSLL-0221Z (LVP-FT-0221Z)	SS	LVP Caustic Scrub Drain Seal Flow Low Low • Override Closes LFP-YV-1207/2207 • Override Closes LFP-YV-1208/2208	
	LVP-PDSHH-0139Z (LVP-PT-0139Z/0140Z)	SS	Melter Offgas Vessel Vent Header Differential Pressure High High Override Closes LFP-YV-1208/2208	
LFP-PMP-00002 (Melter 1 Feed Pump)	LFP-YC-1165_OPND	-	• Auto Starts pump LFP-PMP-00002 • Auto Open valve LFP-YV-1112	
	LFP-FSLL-1168 (LFP-FT-1168) AND LFP-YC-1141_RNG	-	Pump LFP-PMP-00002 Discharge Flow Low Low and LFP-PMP-00002 Running Override Stops LFP-PMP-00002	
	LFP-FQSH-1168 (LFP-FT-1168) AND LFP-YC-1110_OPND AND (LFP-YC-1162_OPND AND LFP-YC-1153_OPND)	-	Pump LFP-PMP-00002 Discharge Totalizer Flow High, and LFP-VSL-00002 Feed Return Valve not Open, and at least one of Sampler Return Valve and LFP-VSL-00002 Sampler Feed Valve not Open Auto Stops LFP-PMP-00002	
	LFP-YC-1141_RNG	-	• Not Running Override Closes LFP-YV-1112 • Auto Closes LFP-YV-1165 • Override Closes LFP-YV-1165 when in Manual	
	LFP-YC-1112_OPND	-	Not Open Override Stops LFP-PMP-00002	
LFP-BULGE-00001 (Melter 1 Feed/Preparation Valve Bulge)	LFP-PSHH-1150 (LFP-PT-1150)	-	Pump LFP-PMP-00001/00002 Discharge Header Pressure High High • Override Stops LFP-PMP-00001A • Override Stops LFP-PMP-00001B • Override Stops LFP-PMP-00002	
	LFP-YC-1102_OPND	-	Override Closes LFP-YV-1102 after Valve Opened for a preset time	
LFP-BULGE-00001/00002 (Melter 1/2 Feed/Preparation Valve Bulge)	RLD-LSHH-2205A (RLD-LT-2205/2206)	-	RLD-VSL-00004 Level High High Override Closes LFP-YV-1102/2102	
LFP-UK-1210	LMP-TSLL-1263G (LMP-TT-1263B/1264B/1265B/1266B/1267B)	-	Melter 1 Plenum Average Temperature Low Low Begins Melter 1 ADS Pump Normal Shutdown Sequence	

Table 4-7 Trips and Interlocks for LAW LFP System

Equipment No.	Instrument No.	SAI	Function (CSR)	Remarks
	LVP-PDSHH-0007 (LVP-PDT-0007) OR LVP-PDSHH-0008 (LVP-PDT-0008) OR LVP-PDSHH-0011 (LVP-PDT-0011) OR LVP-PDSHH-0012 (LVP-PDT-0012)	-	Melter Offgas HEPA Filter 1B/2B/2A/3A Pressure Differential High High Begins Melter 1 ADS Pump Normal Shutdown Sequence	
	LFP-YC-1143_RNG	-	Not Running begins Melter 1 ADS Pump Normal Shutdown Sequence after preset time	
	LFP-LSLL-1146A (LFP-LT-1146)	-	LFP-VSL-00002 Level Low Low Begins Melter 1 ADS Pump Normal Shutdown Sequence	
	LOP-LSHH-1063 OR LOP-LSLL-1063 (LOP-LT-1063)	-	LOP-SCB-00001 Level High High or Low Low Begins Melter 1 ADS Pump Normal Shutdown Sequence	
LFP-UK-1210/2210	LOP-YC-1002_ZSL	-	Melter 1 Offgas Bypass Valve Not Closed Begins Melter 1/2 ADS Pump Normal Shutdown Sequence	
	LVP-TDSLL-0001Z (LVP-TT-0005/0001/0136/0137)	SS	Melter Offgas HEPA Preheater Differential Temperature Low Low Begins Melter 1/2 ADS Pump Normal Shutdown Sequence	
	LVP-YSL-0017A	-	LVP One Exhauster Running Begins Melter 1 ADS Pump Normal Shutdown Sequence	
	LVP-ZSL-0097	-	Caustic Scrubber Bypass Valve Not Closed Begins Melter 1 ADS Pump Normal Shutdown Sequence	
	LVP-YC-0403A_CLSD	-	Mercury Absorber Bypass Valve Not Closed Begins Melter 1 ADS Pump Normal Shutdown Sequence	
	LVP-ZSL-0501	-	Catalytic Oxidizer Bypass Valve Not Closed Begins Melter 1 ADS Pump Normal Shutdown Sequence	
	LVP-ASH-0423A	-	Offgas Average Hg Level High Begins Melter 1 ADS Pump Normal Shutdown Sequence	

Table 4-7 Trips and Interlocks for LAW LFP System

Equipment No.	Instrument No.	SAI	Function (CSR)	Remarks
LFP-VSL-00003 (Melter 2 Feed Preparation Vessel)	LFP-LSHH-2124A (LFP-LT-2124/2140)	-	LFP-VSL-00003 Level High High • Override Closes LFP-YV-2105 • Override Closes LFP-YV-2106 • Override Closes LFP-YV-2115 • Override Closes LFP-YV-2117 • Override Closes LFP-YV-2118 • Override Closes LFP-YV-2121 • Override Closes LFP-YV-2122 • Override Closes LFP-YV-2132 • Override Closes LFP-YV-2161 • Override Closes LFP-YV-2163 • Override Closes LFP-YV-2164 • Override Closes GFR-YV-2002	
	LFP-LSLL-2124A (LFP-LT-2124/2140)	-	LFP-VSL-00003 Level Low Low Override Stops LFP-AGT-00003	
	LFP-LSLLL-2124A (LFP-LT-2124/2140)	-	LFP-VSL-00003 Level Low Low Low • Override Stops LFP-PMP-00003A • Override Stops LFP-PMP-00003B	
	LFP-TSHH-2125 (LFP-TT-2125)	-	LFP-VSL-00003 Temperature High High Override Stops LFP-AGT-00003	
	LFP-YC-2127_RNG	-	Not Running Override Closes GFR-YV-2002	
LFP-PMP-00003A (Melter 2 Feed Preparation Pump)	LFP-YC-2163_OPND	-	• Auto Starts pump LFP-PMP-00003A • Auto Open valve LFP-YV-2107	
	LFP-FSLL-2166 (LFP-FT-2166) AND LFP-YC-2128_RNG	-	Pump LFP-PMP-00003A Discharge Flow Low Low and LFP-PMP-00003 Running Override Stops LFP-PMP-00003A	
	LFP-FQSH-2166 (LFP-FT-2166) AND (LFP-YC-2161_OPND AND LFP-YC-2153_OPND) AND LFP-YC-2106_OPND	-	Pump LFP-PMP-00003A Discharge Totalizer Flow High, and at least one of LFP-VSL-00003 Sampler Return Path and LFP-VSL-00004 Sampler Feed Path not Open, and LFP-VSL-00002 Feed Return Valve not Open Auto Stops pump LFP-PMP-00003A	
	LFP-YC-2128_RNG	-	• When pump Not Running, Override Closes valve LFP-YV-2107 • Auto Closes LFP-YV-2163 after a preset time • Override Closes LFP-YV-2163 after a preset time when pump in Manual	

Table 4-7 Trips and Interlocks for LAW LFP System

Equipment No.	Instrument No.	SAI	Function (CSR)	Remarks
	LFP-YC-2107_OPND	-	When Not Open, Override Stops pump LFP-PMP-00003A	
LFP-PMP-00003B (Melter 2 Feed Preparation Pump)	LFP-YC-2164_OPND	-	• Auto Starts pump LFP-PMP-00003B • Auto Opens valve LFP-YV-2108	
	LFP-FSLL-2167 (LFP-FT-2167) AND LFP-YC-2130_RNG	-	Pump LFP-PMP-00003B Discharge Flow Low Low and LFP-PMP-00003B Running Override Stops LFP-PMP-00003B	
	LFP-FQSH-2167 (LFP-FT-2167) AND (LFP-YC-2161_OPND AND LFP-YC-2153_OPND) AND LFP-YC-2106_OPND	-	Pump LFP-PMP-00003B Discharge Totalizer Flow High, and at least one of LFP-VSL-00003 Sampler Return Path and LFP-VSL-00004 Sampler Feed Path not Open and, LFP-VSL-00003 Feed Return Valve not Open Auto Stops LFP-PMP-00003B	
	LFP-YC-2130_RNG	-	• When Pump Not Running, Override Closes LFP-YV-2108 • Auto Closes LFP-YV-2164 after a preset time • When in Manual, Override Closes LFP-YV-2164 after a preset time	
	LFP-YC-2108_OPND	-	Not Open Override Stops pump LFP-PMP-00003B	
LFP-VSL-00004 (Melter 2 Feed Vessel)	LFP-LSHH-2145Z (LFP-LT-2145Z)	SS	Melter 2 Anti-Siphon Level High High • Override Closes LFP-YV-2207 • Override Closes LFP-YV-2208	
	LFP-LSHH-2146A (LFP-LT-2146)	-	LFP-VSL-00004 Level High High • Override Closes LFP-YV-2105 • Override Closes LFP-YV-2110 • Override Closes LFP-YV-2115 • Override Closes LFP-YV-2133 • Override Closes LFP-YV-2137 • Override Closes LFP-YV-2152 • Override Closes LFP-YV-2162 • Override Closes LFP-YV-2165 • Override Closes LFP-YV-2207 • Override Closes LFP-YV-2208	
	LFP-LSLL-2146A (LFP-LT-2146)	-	LFP-VSL-00004 Level Low Low Override Stops LFP-AGT-00004	

Table 4-7 Trips and Interlocks for LAW LFP System

Equipment No.	Instrument No.	SAI	Function (CSR)	Remarks
	LFP-LSLL-2146A (LFP-LT-2146)	-	LFP-VSL-00004 Level Low Low • Sequence Stops LFP-PMP-00013 • Sequence Stops LFP-PMP-00014 • Sequence Stops LFP-PMP-00015 • Sequence Stops LFP-PMP-00016 • Sequence Stops LFP-PMP-00017 • Sequence Stops LFP-PMP-00018	
	LFP-LSLLL-2146A (LFP-LT-2146)	-	LFP-VSL-00002 Level Low Low Low Override Stops LFP-PMP-00004	
	LFP-TSHH-2147 (LFP-TT-2147)	-	LFP-VSL-00002 Temperature High High Override Stops LFP-AGT-00004	
	LMP-PDSHH-2528Z (LMP-PDT-2528Z/2529Z)	SS	LMP Melter 2 Plenum Pressure High High • Override Closes LFP-YV-2207 • Override Closes LFP-YV-2208	
	LMP-PDSHH-2410A (LMP-PDT-2410/2411)	-	LMP Melter 2 Plenum Differential Pressure High High • Override Closes LFP-YV-2207 • Override Closes LFP-YV-2208	
	LOP-LSLL-2011Z OR LOP-LSHH-2011Z (LOP-LT-2011Z)	SS	Melter 2 SBS Level Low Low • Override Closes LFP-YV-2207 • Override Closes LFP-YV-2208	
	LMP-LSHH-2403A (LMP-LT-2403/2405)	-	LMP-BBLR-00056 Level High High Override Closes LFP-YV-2208	
LFP-PMP-00004 (Melter 2 Feed Pump)	LFP-YC-2165_OPND	-	• Auto Starts pump LFP-PMP-00004 • Auto Opens valve LFP-YV-2112	
	LFP-FSLL-2168 (LFP-FT-2168) AND LFP-YC-2141_RNG	-	Pump LFP-PMP-00004 Discharge Flow Low Low and LFP-PMP-00004 Running Override Stops LFP-PMP-00004	
	LFP-FQSH-2168 (LFP-FT-2168) AND LFP-YC-2110_OPND AND (LFP-YC-2162_OPND AND LFP-YC-2153_OPND)	-	Pump LFP-PMP-00004 Discharge Totalizer Flow High, and LFP-VSL-00004 Feed Return Valve not Open, and at least one of Sampler Return Valve and LFP-VSL-00004 Sampler Feed Valve not Open Auto Stops LFP-PMP-00004	

Table 4-7 Trips and Interlocks for LAW LFP System

Equipment No.	Instrument No.	SAI	Function (CSR)	Remarks
	LFP-YC-2141_RNG	-	• Not Running Override Closes LFP-YV-2112 • Auto Closes LFP-YV-2165 • Override Closes LFP-YV-2165 when in Manual	
	LFP-YC-2112_OPND	-	Not Open Override Stops LFP-PMP-00004	
LFP-BULGE-00002 (Melter 2 Feed/Preparation Valve Bulge)	LFP-PSHH-2150 (LFP-PT-2150)	-	Pump LFP-PMP-00003/00004 Discharge Header Pressure High High • Override Stops LFP-PMP-00003A • Override Stops LFP-PMP-00003B • Override Stops LFP-PMP-00004	
	LFP-YC-2102_OPND	-	Override Closes LFP-YV-2102 after Valve Opened for a preset time	
LFP-UK-2210	LMP-TSLL-2263G (LMP-TT-2263B/2264B/2265B /2266B/-2267B)	-	Melter 2 Plenum Average Temperature Low Low Begins Melter 2 ADS Pump Normal Shutdown Sequence	
	LVP-PDSHH-0007 (LVP-PDT-0007) OR LVP-PDSHH-0008 (LVP-PDT-0008) OR LVP-PDSHH-0011 (LVP-PDT-0011) OR LVP-PDSHH-0012 (LVP-PDT-0012)	-	Melter Offgas HEPA Filter 1B/2B/2A/3A Pressure Differential High High Begins Melter 2 ADS Pump Normal Shutdown Sequence	
	LFP-YC-2143_RNG	-	Not Running begins Melter 2 ADS Pump Normal Shutdown Sequence after preset time	
	LFP-LSLL-2146A (LFP-LT-2146)	-	LFP-VSL-00004 Level Low Low Begins Melter 2 ADS Pump Normal Shutdown Sequence	
	LOP-LSHH-2063 OR LOP-LSLL-2063 (LOP-LT-2063)	-	LOP-SCB-00002 Level High High or Low Low Begins Melter 2 ADS Pump Normal Shutdown Sequence	

4.1.8.4 Packaged Equipment

N/A

4.1.8.5 Complex Control Schemes

1. Vessel LCP-VSL-00001 Bubbler LCP-DT-0144/PT-0147 Flush and Purge Sequence
   a. Normal Operation
      i. Place the following valves in Auto: LCP-YV-0001 (LCP-RK-00001 Utilities Valve), LCP-YV-0144A, LCP-YV-0144B (LCP-VSL-00001 Bubbler LCP-DT-0144/PT-0147 Flush & Purge Valves)
      ii. Start the Flush and Purge sequence by placing the ICN/HMI Sequence handswitch LCP-HS-0144 in the Start position. The valves sequence as follows:
         1. Hold the last value for LCP-DI-0144, LCP-PI-0147.
         2. Flush LCP-DT-0144 with DIW for a preset time by Auto Opening LCP-YV-0001 to select DIW and LCP-YV-0144A to perform flush.
         3. Purge LCP-DT-0144 and LCP-PT-0147 with air for a preset time by Auto Closing LCP-YV-0001 to select air and Auto Opening LCP-YV-0144A and LCP-YV-0144B to perform purge.
         4. All valves Auto Closes
         5. After a predetermined amount of time release the last value hold on LCP-DI-0144 and LCP-PI-0147.
   b. Sequence Shutdown:
      i. The sequence stops at any time by using the STOP handswitch. The following occurs:
         1. All valves Auto Closes
         2. After a predetermined amount of time release the last value hold on LCP-DI-0144 and LCP-PI-0147.

2. Vessel LCP-VSL-00002 Bubbler LCP-DT-0259/PT-0266 Flush and Purge Sequence
   a. Normal Operation
      i. Place the following valves in Auto: LCP-YV-0002 (LCP-RK-00002 Utilities Valve), LCP-YV-0259A, LCP-YV-0259B (LCP-VSL-00002 Bubbler LCP-DT-0259/PT-0266 Flush & Purge Valves)
      ii. Start the Flush and Purge sequence by placing the ICN/HMI Sequence handswitch LCP-HS-0259 in the Start position. The valves sequence as follows:
         1. Hold the last value for LCP-DI-0259, LCP-PI-0266.
         2. Flush LCP-DT-0259 with DIW for a preset time by Auto Opening LCP-YV-0002 to select DIW and LCP-YV-0259A to perform flush.
         3. Purge LCP-DT-0259 and LCP-PT-0266 with air for a preset time by Auto Closing LCP-YV-0002 to select air and Auto Opening LCP-YV-0259A and LCP-YV-0259B to perform purge.
         4. All valves Auto Closes
         5. After a predetermined amount of time release the last value hold on LCP-DI-0259 and LCP-PI-0266.
   b. Sequence Shutdown:
      i. The sequence stops at any time by using the STOP handswitch. The following occurs:
         1. All valves Auto Closes
         2. After a predetermined amount of time release the last value hold on LCP-DI-0259 and LCP-PI-0266.

3. Vessel LFP-VSL-00001 Flush and Purge Sequence
   a. Normal Operation:

i. Place the following valves in Auto: LCP-YV-0001 (LCP-RK-00001 Utilities Valve), LFP-YV-1154A, LFP-YV-1154B (LFP-VSL-00001 Bubbler LFP-DT-1154/PT-1159 Flush & Purge Valves)

ii. Start the Flush and Purge sequence for Vessel LFP-VSL-00001 Bubbler LFP-DT-1154/PT-1159 by placing the ICN/HMI Sequence handswitch LFP-HS-1154 in the Start position. The valves sequence as follows:

1. Hold the last value for LFP-DI-1154, LFP-PI-1159
2. Flush LFP-DT-1154 with DIW for a preset time by Auto Open LCP-YV- 0001 to select DIW and LFP-YV-1154A to perform flush
3. Purge LFP-DT-1154 and LFP-PT-1159 with air for a preset time by Auto Close LCP-YV-0001 to select air and energizing LFP-YV-1154A and LFP-YV-1154B to perform purge
4. Release the last value hold on LFP-DI-1154 and LFP-PI-1159
5. The sequence can be terminated by operator action at any time using the ICN/HMI sequence handswitch LFP-HS-1154.

Note: The above steps are identical for all Bubbler Flush and Purge Sequences:

- LFP-VSL-00001: LFP-DT-1154/PT-1159,
- LFP-VSL-00002: LFP-DT-1157/PT-1160,
- LFP-VSL-00003: LFP-DT-2154/PT-2159,
- LFP-VSL-00004: LFP-DT-2157/PT-2160.
- The appropriate tag numbers will have to be substituted.

4.2 Reserved

4.3 Reserved

4.4 Reserved

5 Sources, Bases, and Other References

5.1 Source / Basis References

Document Number	Rev	Title	Text Reference
24590-WTP-DB-ENG-01-001	02	Basis of Design	BOD
24590-WTP-RPT-OP-01-001	005	Operations Requirements Document	ORD
24590-WTP-PSAR-ESH-01-002-03	05K	Preliminary Documented Safety Analysis to Support Construction Authorization; LAW Facility Specific Information	PDSA - LAW Facility
24590-WTP-PSAR-ESH-01-002-02	05D	Preliminary Documented Safety Analysis to Support Construction Authorization; PT Facility Specific Information	PDSA - PT Facility
24590-WTP-SRD-ESH-01-001-02	07F	Safety Requirements Document, Volume II	SRD

Document Number	Rev	Title	Text Reference
DE-AC27-01RV14136	N/A	DOE/BNI WTP Contract Mod No. 350, Section C - Statement of Work	WTP Contract
WA7890008967	N/A	Dangerous Waste Portion of RCRA Permit	Dangerous Waste Portion of RCRA Permit

5.2 Other References

Document Number	Rev	Title
24590-LAW-MVC-LFP-00001	000	LAW Melter Feed Process System (LFP) Data
24590-LAW-M4C-20-00002	000	LAW LCP and LFP Batch Volumes
24590-WTP-3PS-MACS-T0003	004	Engineering Specification for Mechanical Agitators
24590-WTP-3PS-MPC0-T0008	001	Engineering Specification for Vessel-Mounted Vertical Transfer Pumps - LAW Facility
24590-WTP-3PS-M000-T0001	001	Engineering Specification for Air Displacement Slurry Pumps
24590-LAW-N1D-LCP-00001	03	LCP-VSL-00001 and LCP-VSL-00002 (LAW) LAW Concentrate Receipt Vessel
24590-LAW-N1D-LCP-00002	0	LCP-PMP-00001A/B and LCP-PMP-00002A/B (LAW) Concentrate Receipt Pump
24590-LAW-N1D-LFP-00004	02	LFP-VSL-00001 and LFP-VSL-00003 LAW - LAW Melter 1 and 2 Feed Preparation Vessel
24590-LAW-N1D-LFP-00006	0	LFP VSL 00002 and LFP VSL 00004 (LAW) Melter 1 and 2 Feed Vessels
24590-LAW-N1D-LFP-00001	0	LFP-HX-00001/2/3/4 (LAW) Cooling Jacket
24590-WTP-DB-PET-09-001	1	Process Inputs Basis of Design [PIBOD]
24590-LAW-RPT-ENS-12-001	0	LAW Preliminary Post Accident Monitoring Report
24590-LAW-U0D-W16T-00001	2	LAW Room Environment Data Sheet
24590-WTP-Z0C-W13T-00010	00F	Contact Dose Rates to Equipment from Beta and Gamma Emitters
DOE-STD-1020-94	N/A	Natural Phenomena Hazards Design and Evaluation Criteria for Department of Energy Facilities
24590-WTP-PD-ENG-0001	01	Equipment Qualification Program Description
24590-WTP-GPG-ENG-033	003	Evaluation For Seismic Interaction Effects
24590-WTP-GPG-M-027	05	Recommended Slopes for Piping System
24590-LAW-RPT-ENS-10-001	000	LAW Melter Facility NOx Concentrations 2 Hours after Loss of Off-Site Power (Batteries Exhausted)

5.3 Design References

Document Number	Title
Process Flow Diagrams	
24590-LAW-M5-V17T-00001	Process Flow Diagram LAW Concentrate Receipt & Melter 1 Feed (System LCP, GFR, and LFP)

Document Number	Title
24590-LAW-M5-V17T-00002	Process Flow Diagram LAW Concentrate Receipt & Melter 2 Feed (System LCP, GFR, and LFP)
24590-LAW-MXD-LFP-00001	LFP-BULGE-00001 - Melter 1 Feed/Prep Valve Bulge
24590-LAW-MXD-LFP-00002	LFP-BULGE-00002 - Melter 2 Feed/Prep Valve Bulge
P&IDs	
24590-PTF-M6-PWD-00058	PTF - P&ID Plant Wash & Disposal System Underground Transfer Lines
24590-LAW-M6-LCP-00001001	P&ID - LAW Concentrate Receipt Process System LCP-Bulge-00001
24590-LAW-M6-LCP-00001002	P&ID - LAW Concentrate Receipt Process System Concentrate Receipt Vessel LCP-VSL-00001
24590-LAW-M6-LCP-00001003	P&ID - LAW Concentrate Receipt Process System Concentrate Receipt Vessel LCP-VSL-00001
24590-LAW-M6-LCP-00001004	P&ID - LAW Concentrate Receipt Process System LCP-Bulge-00002 (Sheet 1 of 2)
24590-LAW-M6-LCP-00001005	P&ID - LAW Concentrate Receipt Process System LCP-Bulge-00002 (Sheet 2 of 2)
24590-LAW-M6-LCP-00001006	P&ID - LAW Concentrate Receipt Process System Expansion Vessel LCP-VSL-00005
24590-LAW-M6-LCP-00002001	P&ID - LAW Concentrate Receipt Process System LCP-Bulge-00003 (Sheet 1 of 2)
24590-LAW-M6-LCP-00002002	P&ID - LAW Concentrate Receipt Process System LCP-Bulge-00003 (Sheet 1 of 2)
24590-LAW-M6-LCP-00002003	P&ID - LAW Concentrate Receipt Process System Concentrate Receipt Vessel LCP-VSL-00002
24590-LAW-M6-LCP-00002004	P&ID - LAW Concentrate Receipt Process System Concentrate Receipt Vessel LCP-VSL-00002
24590-LAW-M6-LCP-00002005	P&ID - LAW Concentrate Receipt Process System Expansion Vessel LCP-VSL-00006
24590-LAW-M6-LFP-00001001	P&ID - LAW Melter Feed Process System Melter 1 Feed Preparation LFP-VSL-00001
24590-LAW-M6-LFP-00001002	P&ID - LAW Melter Feed Process System Melter 1 Feed Preparation LFP-VSL-00001
24590-LAW-M6-LFP-00001003	P&ID - LAW Melter Feed Process System Melter 1 Feed LFP-VSL-00002
24590-LAW-M6-LFP-00001004	P&ID - LAW Melter Feed Process System Melter 1 Feed LFP-VSL-00002
24590-LAW-M6-LFP-00001005	P&ID - LAW Melter Feed Process System Melter 1 Feed Preparation and Feed LFP-Bulge-00001
24590-LAW-M6-LFP-00001006	P&ID - LAW Melter Feed Process System Melter 1 Feed Preparation and Feed LFP-Bulge-00001
24590-LAW-M6-LFP-00003001	P&ID - LAW Melter Feed Process System Melter 2 Feed Preparation LFP-VSL-00003
24590-LAW-M6-LFP-00003002	P&ID - LAW Melter Feed Process System Melter 2 Feed Preparation LFP-VSL-00003
24590-LAW-M6-LFP-00003003	P&ID - LAW Melter Feed Process System Melter 2 Feed LFP-VSL-00004
24590-LAW-M6-LFP-00003004	P&ID - LAW Melter Feed Process System Melter 2 Feed LFP-VSL-00004
24590-LAW-M6-LFP-00003005	P&ID - LAW Melter Feed Process System Melter 2 Feed Preparation and Feed LFP-Bulge-00002
24590-LAW-M6-LFP-00003006	P&ID - LAW Melter Feed Process System Melter 2 Feed Preparation and Feed LFP-Bulge-00002
24590-LAW-M6-LFP-00002001	P&ID - LAW Melter Feed Process System Ads Pump Utilities

Document Number	Title
24590-LAW-M6-LFP-00002002	P&ID - LAW Melter Feed Process System Ads Pump Controls LFP-PMP-00010
24590-LAW-M6-LFP-00002003	P&ID - LAW Melter Feed Process System Ads Pump Controls LFP-PMP-00009
24590-LAW-M6-LFP-00002004	P&ID - LAW Melter Feed Process System Ads Pump Controls LFP-PMP-00007
24590-LAW-M6-LFP-00002005	P&ID - LAW Melter Feed Process System Ads Pump Controls LFP-PMP-00008
24590-LAW-M6-LFP-00002006	P&ID - LAW Melter Feed Process System Ads Pump Controls LFP-PMP-00011
24590-LAW-M6-LFP-00002007	P&ID - LAW Melter Feed Process System Ads Pump Controls LFP-PMP-00012
24590-LAW-M6-LFP-00004001	P&ID - LAW Melter Feed Process System Ads Pump Utilities
24590-LAW-M6-LFP-00004002	P&ID - LAW Melter Feed Process System Ads Pump Controls LFP-PMP-00016
24590-LAW-M6-LFP-00004003	P&ID - LAW Melter Feed Process System Ads Pump Controls LFP-PMP-00015
24590-LAW-M6-LFP-00004004	P&ID - LAW Melter Feed Process System Ads Pump Controls LFP-PMP-00013
24590-LAW-M6-LFP-00004005	P&ID - LAW Melter Feed Process System Ads Pump Controls LFP-PMP-00014
24590-LAW-M6-LFP-00004006	P&ID - LAW Melter Feed Process System Ads Pump Controls LFP-PMP-00017
24590-LAW-M6-LFP-00004007	P&ID - LAW Melter Feed Process System Ads Pump Controls LFP-PMP-00018
24590-LAW-M6-ASX-00009001	P&ID - LAW Autosampling System Isolok ASX-SMPLR-00012
24590-LAW-M6-ASX-00007001	P&ID - LAW Autosampling System Isolok ASX-SMPLR-00013
General Arrangement / Equipment Location Drawings	
24590-LAW-P1-P01T-00002	LAW Vitrification Building General Arrangement Plan at EL 3'-0"
24590-LAW-P1-P01T-00003	LAW Vitrification Building General Arrangement Plan at EL 22'-0"
24590-LAW-P1-P01T-00004	LAW Vitrification Building General Arrangement Plan at EL 28'-0"
24590-LAW-P1-P01T-00005	LAW Vitrification Building General Arrangement Plan at EL 48'-0"
24590-LAW-P1-P01T-00010	LAW Vitrification Building General Arrangement Section K-K, L-L and M-M
24590-LAW-P1-P01T-00011	LAW Vitrification Building General Arrangement Section P-P, R-R and U-U
24590-LAW-P1-P23T-00013	LAW Vitrification Building Equipment Location Plan EL. 0'-0" / Area 6

Appendix A Test Objectives, Conditions, and Acceptance Criteria

NOTE: Demonstrations and Tests identified in this appendix are preliminary, pending completion of design activities. They are established to document the flowdown of verification needs established in Section 3 but are not sufficiently detailed for development of specific system and equipment test plans. They may be used for general planning only. This note is to be removed when design is sufficiently progressed to provide the details needed to establish the basis for testing and acceptance criteria. **[HOLD]**

Requirement (para #)	Test (T) or Demo (D)	Plan (including SSCs)	Acceptance Criteria (TAC or GTC)*	Notes/Comments	Test Conditions
3.4.1.1	T	Store LAW Concentrate - LAW Concentrate Receipt Vessels (LCP-VSL-00001/2) The system receives treated LAW concentrate from the PT Facility treated LAW concentrate storage system (TCP). Transfer Process Fluids - LCP-PMP-00001A/B and 00002A/B In no rmal operations the pumps are used to recirculate through ASX-SMPLR-00013 and transfers treated LAW concentrate to the Melter Feed Preparation Vessels. In off-normal operations the pumps are used to transfer from one Concentrate Receipt vessel to another; as well as, transferring to RLD-VSL-00003 for routing back to the PT facility. Recirculation by LCP pumps is required as needed upon detection of low temperature in the CRVs. The system has the capability to route LAW concentrate for normal and off-normal operations via the alignment of valves in the LCP process bulge.	Demonstrate normal operation of LAW Concentrate Receipt Vessels (LCP-VSL-00001/2). (1) Vessel head space pressure maintained at a vacuum no less than 2 inches of water column. (2) Visually inspect, via open manway, vessel to insure wash nozzle wets all vessel internals below the vessel overflow. Demonstrate that the Concentrate Receipt Pumps can transfer at a minimum flow rate not less than 88 gpm for all operations. Normal Operations: • Auto-Sampler Recirculation • Transfer to LFP-VSL-00001 • Transfer to LFP-VSL-00003 Off-normal Operations: • Transfer to RLD-VSL-00003 • Transfer to LCP-VSL-00002 • Transfer to LCP-VSL-00001 **(GTC)**	1) Demonstrate function of purge/vent system to provide purge air to the vessel headspace while maintaining headspace negative pressure. Use LCP-PI-0147 to measure headspace pressure in LCP-VSL-00001. Use LCP-PI-0266 to measure headspace pressure in LCP-VSL-00002. (2) Demonstrate normal function (decontamination or flushing) of vessel wash nozzles. Adjust wash nozzle as needed if required to meet success criteria. •Use LCP-FI-0158 for flow measurement on LCP-PMP-00001A. •Use LCP-FI-0159 for flow measurement on LCP-PMP-00001B. •Use LCP-FI-0279 for flow measurement on LCP-PMP-00002A. •Use LCP-FI-0280 for flow measurement on LCP-PMP-00002B. The rated flow rate of the Concentrate Receipt Pumps, LCP-PMP-00001A/B and 00002A/B, is 88 gpm.	LVP: Operational The testing of the DIW spray nozzles is to be performed using onsite water (down to RWW quality). The testing of the vessel ventilation function is to be performed with the vessel filled with water to a level equal to the high level of the vessel. LCP/ASX/RLD: Operational This test to be performed using simulant. Simulant type used is on Hold. Cold Commissioning Test
3.4.1.1	T	Receive LAW Concentrate - LAW Melter Feed Preparation Vessel (LFP-VSL-00001/3) The MFPVs receive treated LAW concentrate from the LAW concentrate receipt system (LCP). The waste gets sampled. The glass formers are added and mixed in.	Demonstrate normal operation of LAW Melter Feed Preparation Vessel (LFP-VSL-00001/3). Vessel head space pressure maintained at a vacuum no less than 2 inches of water column. **(GTC)**	•Demonstrate function of purge/vent system to provide purge air to the vessel headspace while maintaining headspace negative pressure no less than 2 inches of water column. Use LFP-PI-1159 to measure headspace pressure in LFP-VSL-00001. Use LFP-PI-2159 to	LVP: Operational The testing of the vessel ventilation function is to be performed with the vessel filled to a level no less than 8 feet. Either temporary air supply, water supply, and controls are needed; or, the permanent systems for the facility are required. Cold Commissioning Test

Requirement (para #)	Test (T) or Demo (D)	Plan (including SSCs)	Acceptance Criteria (TAC or GTC)*	Notes/Comments	Test Conditions
				measure headspace pressure in LFP-VSL-00003. Adjust purge line needle valve as needed to adjust the air flow into the vessel. •Use Level instrument LFP-LT-1140 for level determination in LFP-VSL-00001. •Use Level instrument LFP-LT-2140 for level determination in LFP-VSL-00003.	
3.4.1.1	T	Receive LAW Melter Feed - LAW Melter Feed Vessels (LFP-VSL-00002/4) The MFVs receive blended waste from the MFPVs (LFP-VSL-00001/3). The waste is mixed via vessel agitators and is fed via the ADS pumps to the LAW melters.	Demonstrate normal operation of LAW Melter Feed Vessel (LFP-VSL-00002/4). Vessel head space pressure maintained at a vacuum no less than 2 inches of water column. **(GTC)**	•Demonstrate function of purge/vent system to provide purge air to the vessel headspace while maintaining headspace negative pressure no less than 2 inches of water column. Use LFP-PI-1160 to measure headspace pressure in LFP-VSL-00001. Use LFP-PI-2160 to measure headspace pressure in LFP-VSL-00003. Adjust purge line needle valve as needed to adjust the air flow into the vessel. •Use Level instrument LFP-LT-1146 for level determination in LFP-VSL-00002. •Use Level instrument LFP-LT-2146 for level determination in LFP-VSL-00004.	LVP: Operational The testing of the vessel ventilation function is to be performed with the vessel filled a level no less than 7 feet. Either temporary air supply, water supply, and controls are needed; or, the permanent systems for the facility are required. Cold Commissioning Test
3.4.1.1	T	Transfer LAW Melter Feed - LFP-PMP-00001A/B and 00003A/B In normal operations the pumps are used to recirculate through ASX-SMPLR-00012/13 and transfers blended melter feed to the Melter Feed Vessels. In off-normal operations the pumps are used to transfer from one MFPV to another; and, transferring to RLD-VSL-00003 for routing back to the PT facility. The system has the capability to route LAW concentrate for normal and off-normal operations via the alignment of valves in the LFP process bulge.	Demonstrate that the Melter Feed Preparation Pumps can transfer to the following end users at a flow rate no greater than 50 gpm and no less than the minimum flow rate identified below. Normal Operations: •Auto-Sampler Recirculation - 50 gpm (min) •Transfer to LFP-VSL-00002 - 50 gpm (min) •Transfer to LFP-VSL-00004 - 50 gpm (min) Off-normal Operations: •Transfer to RLD-VSL-00003 - 50 gpm (min) •Transfer to LFP-VSL-00001 - 50 gpm (min)	•Use LFP-FI-1166 for flow measurement on LFP-PMP-00001A. •Use LFP-FI-1167 for flow measurement on LFP-PMP-00001B. •Use LFP-FI-2166 for flow measurement on LFP-PMP-00003A. •Use LFP-FI-2167 for flow measurement on LFP-PMP-00003B. The design flow rate of the Concentrate Receipt Pumps, LFP-PMP-00001A/B and 00003A/B, is 50 gpm.	RLD/ASX: Operational This test to be performed using simulant. Simulant type used is on Hold. Electrical power for the pumps and agitators is required. Also, means of reading out put from flow measurement instruments is required. Cold Commissioning Test

Requirement (para #)	Test (T) or Demo (D)	Plan (including SSCs)	Acceptance Criteria (TAC or GTC)*	Notes/Comments	Test Conditions
			•Transfer to LFP-VSL-00003 - 50 gpm (min) **(GTC)**		
3.4.1.1	T	Transfer LAW Melter Feed - LFP-PMP-00002 and 00004 In normal operations the pumps are used to recirculate through ASX-SMPLR-00012/13. In off-normal operations the pumps are used to transfer from one MFPV to another; and, transferring to RLD-VSL-00003 for routing back to the PT facility. The system has the capability to route LAW concentrate for normal and off-normal operations via the alignment of valves in the LFP process bulge.	Demonstrate that the Melter Feed Sampling Pumps can transfer to the following end users at a flow rate no greater than 60 gpm and no less than the minimum flow rate identified below. Normal Operations: •Auto-Sampler Recirculation - 50 gpm (min) Off-normal Operations: •Transfer to RLD-VSL-00003 - 50 gpm (min) •Transfer to LFP-VSL-00002 - 50 gpm (min) •Transfer to LFP-VSL-00004 - 50 gpm (min) **(GTC)**	•Use LFP-FI-1168 for flow measurement on LFP-PMP-00002. •Use LFP-FI-2168 for flow measurement on LFP-PMP-00004. The rated flow rate of the Concentrate Receipt Pumps, LFP-PMP-00002 and 00004, is 50 gpm.	RLD/ASX: Operational This test to be performed using simulant. Simulant type used is on Hold. Electrical power for the pumps and agitators is required. Also, means of reading out put from flow measurement instruments is required. Cold Commissioning Test
3.4.1.1	T	Perform integrated system test during cold commissioning to verify the ADS pumps are capable of providing a minimum transfer rate of 3.4 gpm from the MFV to the melter.	Demonstrate that the ADS pumps can transfer to the following end users at a minimum transfer rate of 3.4 GPM. **(GTC)**	**CTNs:** LFP-PMP-00007 to -000112 and LFP-PMP-00013 to -00018	RLD/ASX: Operational This test to be performed using simulant. Simulant type used is on Hold. Electrical power for the pumps and agitators is required. Also, means of reading out put from flow measurement instruments is required. Cold Commissioning Test
3.8.2.2.3	T	Demonstrate that the ADS pump interlock will detect high liquid level in the MFV and isolate the DIW and PSA to appropriate ADS pumps.	Interlocks valves isolate in appropriate time **(TBD) (TAC)**		

Requirement (para #)	Test (T) or Demo (D)	Plan (including SSCs)	Acceptance Criteria (TAC or GTC)*	Notes/Comments	Test Conditions
N/A	T	For all instruments, complete development and documentation of configuration settings for all applicable equipment, perform Clean Build test, and software validation. Configuration settings shall ensure that associated equipment meets all performance and functional requirements.	Record all firmware names, revisions, and configurations. Document Clean Build and Validation. **(GTC)**	Information needed to complete Life Cycle Documentation and place software/firmware on baseline for use. For configuration settings, the requirement for a clean build test is satisfied if documentation of configuration settings is verified in a process where the memory of the equipment is cleared and configuration settings are re-entered from supplied documentation. Validation of configuration settings is accomplished by demonstrating that the equipment on which the configuration settings reside meets its functional and performance requirements.	

Notes:

* Test acceptance criteria (TAC) are based on requirements from authorization basis documents. General test criteria (GTC) are requirements from other sources.

Any non-safety related anomalies or issues experienced during the execution of a test or demonstration plan to validate a requirement can be put on **[HOLD]** until the issue has been resolved.

Appendix B Descriptions of System Functional Flow and Interactions

Function: A.1	Receive Treated LAW Concentrate
Detailed description: The LAW operator determines the size of the batch volume to be transferred. This function will align the valves in the transfer path to send the LAW waste stream to the selected melter train. The operator initiates the transfer and monitors for leaks and vessel levels in the CRV. The transfer terminates when the level in the CRV hits the expected height, when a line leak is detected, or when a volume balance mismatch occurs during transfer.	
Initiation: This function initiates when an LAW batch is determined by the operator to be ready and the LAW operator issues a permissive signal.	
Termination: This function terminates when the minimum volume of flush water has run through the transfer pipe from the PT Facility to the LAW Facility.	
Parallel or sequential functions: Mixing by the agitators; idle air purging; vessel cooling; line flushing from the PT Facility PWD.	
Applicable Modes: Normal operations	

Function: A.2	Mix Treated LAW Concentrate
Detailed description: Mixing must occur before sampling in order to obtain a representative sample. The mechanical agitator mixes the waste for a predetermined amount of time.	
Initiation: This function initiates during the LAW concentrate transfer to the MFPVs.	
Termination: This function does not terminate unless the agitator stops rotating due to operator action or a malfunction/accident.	
Parallel or sequential functions: Transfer of LAW concentrate to MFPVs; sampling of LAW concentrate.	
Applicable Modes: Normal operations; seismic DBE accident conditions	

Function: A.3	Sample Treated LAW
Detailed description: The operator chooses which CRV and associated transfer pump to use in order to obtain a sample. Operational pre-checks are performed to ensure the system is ready to sample. The priming line valve in the chosen transfer/recirculation pump is opened allowing priming DIW to flow through the pump before the waste. The pump then recirculates waste through the auto sampler for a minimum of 10 minutes to get a representative sample. The ASX takes samples, which are then analyzed to determine the waste characteristics and provide the glass former recipe.	
Initiation: This function initiates after the MFPVs receive LAW concentrate and mix the waste for a predetermined amount of time.	
Termination: This function terminates after a predetermined amount of time upon completion of sampling.	
Parallel or sequential functions: Mixing by the agitators; idle air purging; vessel cooling; DIW addition to the CRV via the ASX sample line flush	
Applicable Modes: Normal operations	

Function: A.4	Transfer LAW melter feed to MFPVs
Detailed description: Conforming LAW melter feed is transferred from the CRV to the MFPV.	
Initiation: This function initiates after the Lab determines the glass former recipe based on ASX samples from either the initial LAW concentrate transfer or an already blended and resampled melter feed batch.	
Termination: This function terminates when the batch of glass formers are finished being added to the MFPV.	
Parallel or sequential functions: Receive LAW Concentrate	
Applicable Modes: Normal operations	

Function: A.5	Receive LAW Concentrate
Detailed description: The MFPV receives LAW cocenterate from the CRV.	
Initiation: This function initiates after the Lab determines the glass former recipe based on ASX samples from either the initial LAW concentrate transfer or an already blended and resampled melter feed batch.	
Termination: This function terminates when the batch of glass formers are finished being added to the MFPV.	
Parallel or sequential functions: Mixing by the agitators; idle air purging; vessel cooling	
Applicable Modes: Normal operations	

Function: A.6	Mix LAW Concentrate
Detailed description: The MFPV agitator is operating at all times and mixes the glass former batch with the treated LAW concentrate in order to obtain a representative sample.	
Initiation: This function initiates when the glass formers are added to the MFPV.	
Termination: This function does not terminate unless the agitator stops rotating due to operator action or a malfunction/accident.	
Parallel or sequential functions: Idle air purging; vessel cooling; and addition of DIW	
Applicable Modes: Normal operations; seismic DBE accident conditions	

Function: A.7	Receive Glass Formers
Detailed description: The MFPV agitator is operating at all times and mixes the glass former batch with the treated LAW concentrate in order to obtain a representative sample.	
Initiation: This function initiates when the glass formers are added to the MFPV.	
Termination: This function does not terminate unless the agitator stops rotating due to operator action or a malfunction/accident.	
Parallel or sequential functions: Mixing by the agitators; idle air purging; vessel cooling; and addition of DIW	
Applicable Modes: Normal operations; seismic DBE accident conditions	

Function: A.8	Mix Glass Formers with LAW Concentrate
Detailed description: The MFPV agitator is operating at all times and mixes the glass former batch with the treated LAW concentrate in order to obtain a representative sample.	
Initiation: This function initiates when the glass formers are added to the MFPV.	
Termination: This function does not terminate unless the agitator stops rotating due to operator action or a malfunction/accident.	
Parallel or sequential functions: Mixing by the agitators; idle air purging; vessel cooling; and addition of DIW	
Applicable Modes: Normal operations; seismic DBE accident conditions	

Function: A.9	Sample LAW Melter Feed
Detailed description: Mixing must occur before sampling in order to obtain a representative sample. The operator chooses which MFPV and associated transfer pump to use in order to obtain a sample. Operational pre-checks are performed to ensure the system is ready to sample. The priming line valve in the chosen transfer/recirculation pump is opened allowing priming DIW to flow through the pump before the waste. The pump then recirculates waste through the autosampler for a minimum of 10 minutes to get a representative sample. The ASX takes samples which are then analyzed to determine the waste characteristics and provide the glass former recipe.	
Initiation: This function initiates after the MFPVs receive the glass former batch and mix the glass formers with the LAW concentrate for a predetermined amount of time in order to obtain a representative sample.	
Termination: This function terminates when the ASX flush valve is opened and directs a line flush of the recirculation line and transfer/recirculation pump.	
Parallel or sequential functions: Mixing by the agitators; idle air purging; vessel cooling; DIW addition to the MFPV via the ASX sample line flush	
Applicable Modes: Normal operations	

Function: A.10	Transfer LAW melter feed to MFVs.
Detailed description: The MFPV transfers a batch of melter feed to the MFV. The transfer begins by the operator determining the sending vessel (MFPV), the transfer pump to be used, and the receiving vessel (MFV). Operational pre-checks are performed to ensure the system is ready to transfer. The operator then aligns the valves in the transfer route and enters the volume to be transferred into a flow totalizer. The priming line valve in the chosen transfer/sample pump is opened allowing priming DIW to flow through the pump before the waste. After a predetermined amount of time, the priming valve is closed and allows the LAW melter feed to be transferred to the MFV.	
Initiation: This function initiates once the MFPV LAW melter feed is within the acceptable limits for glass production.	
Termination: This function terminates when the approved batch volume has been transferred.	
Parallel or sequential functions: Mixing by the agitators; idle air purging; vessel cooling; and addition of DIW	
Applicable Modes: Normal operations	

Function: A.11	Receive treated LAW concentrate.
Detailed description: The LFP MFV receives LAW concentrate from the LFP MFPV.	
Initiation: This function initiates during the LAW melter feed transfer from the MFPV to the MFV.	
Termination: This function does not terminate unless the agitator stops rotating due to operator action or a malfunction/accident.	
Parallel or sequential functions: Mixing by the agitators; idle air purging; vessel cooling	
Applicable Modes: Normal operations	

Function: A.12	Mix LAW Melter Feed
Detailed description: The mechanical agitator mixes the waste in order to obtain a representative sample. Additionally, the ISA provides idle purge airflow through the sparge tubes in order to agitate the waste and release trapped hydrogen gas from waste that settles on the bottom of the vessel. Upon loss of a mechanical agitator, the ISA provides air for emergency sparge mode (at least 42 scfm) intermittently to prevent an episodic release of hydrogen.	
Initiation: This function initiates during the LAW melter feed transfer from the MFPV to the MFV.	
Termination: This function does not terminate unless the agitator stops rotating due to operator action or a malfunction/accident.	
Parallel or sequential functions: Mixing by the agitators; idle air purging; vessel cooling	
Applicable Modes: Normal operations; seismic DBE accident conditions	

Function: A.13	Sample LAW melter feed
Detailed description: Representative samples of the LAW melter feed are taken from the MFV by the ASX and analyzed to confirm the feed meets glass property and waste loading requirements for each particular batch.	
Initiation: This function initiates when there is LAW melter feed in the MFV and the operator starts the transfer to the melter.	
Termination: This function terminates if a non-routine event interrupts operations or if the level in the MFV gets too low.	
Parallel or sequential functions: Mixing by the agitators; idle air purging; vessel cooling; addition of DIW for line flushing	
Applicable Modes: Normal operations	

Function: A.14	Transfer LAW Melter Feed to Melters
Detailed description: The ADS pumps pump the melter feed into the melters. There are two ADS pumps per melter train. The pumps operate in cycles instead of both operating at the same time.	
Initiation: This function initiates when there is LAW melter feed in the MFV and the operator starts the transfer to the melter.	
Termination: This function terminates if a non-routine event interrupts operations or if the level in the MFV gets too low.	
Parallel or sequential functions: Mixing by the agitators; idle air purging; vessel cooling; addition of DIW for line flushing	
Applicable Modes: Normal operations	

Function: B.1	Transfer out-of-spec LAW concentrate back to PT TCP via RLD
Detailed description: The out-of-spec LAW will be diluted with DIW and directed back to the PT Facility via the radioactive liquid waste disposal system (RLD).	
Initiation: This function initiates after the LAW concentrate is transferred to the MFPV.	
Termination: This function terminates when the required flush volume of DIW has flowed through the transfer pipe.	
Parallel or sequential functions: N/A	
Applicable Modes: Normal, abnormal, and maintenance operations	

Function: B.2	Transfer LCP/LFP vessel washdowns and overflows to RLD
The LCP/LFP vessel washdowns and overflowed liquid will be directed to the RLD.	
Initiation: This function initiates during LCP/LFP vessel overflow.	
Termination: This function terminates when overflow has ceased.	
Parallel or sequential functions: N/A	
Applicable Modes: Normal, abnormal, and maintenance operations	

Function: C.1	Transfer LCP/LFP vessel contents
Detailed description: The LCP/LFP vessel contents can be removed and transferred to the other melter train. Normally, the CRVs and MFPVs feed forward to the next vessel (CRV to MFPV and MFPV to MFV) on the same melter train.	
Initiation: This function initiates when a vessel is in abnormal operation.	
Termination: This function terminates when the vessel content level drops below the overflow line.	
Parallel or sequential functions: N/A	
Applicable Modes: Abnormal operations; seismic DBE accident conditions	

Function: D.1	Cool LFP Vessel Contents
Detailed description: The CHW provides cooling water to the LFP vessel cooling jackets. The cooling jackets remove radioactive decay heat and heat generated by the agitator motor. Water is constantly flowing through the cooling jackets as long as there is waste in the LFP vessels. The cooling water supplied to the jackets is in a secondary loop to reduce the probability of spreading radiation contamination to the Balance of Facilities.	
Initiation: This function initiates when the waste is transferred to the MFPVs and MFVs.	
Termination: This function terminates when the vessels are being decontaminated for removal and do not contain any waste or if vessel the contents temperature falls below the minimum operating temperature.	
Parallel or sequential functions: Transferring waste to the MFPV and MFV; mixing the waste with the agitator; and adding glass formers	
Applicable Modes: Normal operations; seismic DBE accident conditions	

Function: E.1	Flush Sample/Transfer Line
Detailed description: The LFP vessel sample recirculation loops, sample/transfer pumps, and transfer line from the MFPV to MFV are flushed using DIW to prevent the pumps and lines from plugging. The ASX initiates the flush and the water goes to the LFP vessels.	
Initiation: This function initiates after the ASX has obtained a representative sample of the LAW concentrate or when a transfer from MFPV to MFV is completed.	
Termination: This function terminates when sample/transfer line and pump have been flushed with the required amount of DIW.	
Parallel or sequential functions: N/A	
Applicable Modes: Normal operations	

Function: E.2	Supply DIW to LCP/LFP vessels and pumps
Detailed description: DIW is used for priming the sample/transfer pumps to clear the pump and to initiate the pump, without waste, until the pump reaches operating capacity. DIW is used for diluting the waste in the LCP/LFP vessels via the internal spray mechanisms.	
Initiation: Normal Operation	
Termination: N/A	
Parallel or sequential functions: N/A	
Applicable Modes: Normal operations	

Function: E.3	Supply DIW to LCP/LFP vessel overflow lines to RLD
Detailed description: DIW is used to flush the overflow line from the LCP/LFP vessels to the RLD.	
Initiation: N/A	
Termination: N/A	
Parallel or sequential functions: N/A	
Applicable Modes: Normal operations	

Function: F.1	Supply Air to LCP/LFP instruments and control valves
Detailed description: Compressed air from the instrument service air system (ISA) is supplied to LCP/LFP instruments and control valves.	
Initiation: Overflow line requires DIW flush.	
Termination: Flush complete.	
Parallel or sequential functions: N/A	
Applicable Modes: Normal operations	

Function: G.1	Supply Air Purge to LCP/LFP vessels
Detailed description: Compressed air from the plant service air system (PSA) provides a purge flow during normal mixing operations. The purge air flow is provided prevent the buildup of hydrogen gas in the vessel headspace.	
Initiation: N/A	
Termination: N/A	
Parallel or sequential functions: All	
Applicable Modes: Normal operations	

Function: G.2	Supply Air to MFV ADS pumps
Detailed description: Compressed air from the PSA is supplied to MFV ADS pumps to provide the motive force for transferring LAW to the melters.	
Initiation: N/A	
Termination: Safety interlock activation	
Parallel or sequential functions: All	
Applicable Modes: Normal operations	

Function: H.1	Ventilate LFP Vessel Offgas
Detailed description: The LOP and LVP ventilate the LFP vessels to remove hydrogen from the headspace. The functions of the LOP/LVP are not included in the scope of this document. If the LOP/LVP goes offline for any reason, the vessel has air amplifiers and an overflow feature with a flapper valve that will be used to vent the vessel gases to the melter cave. The air amplifiers maintain negative pressure in the headspace and draw the air out. The overflow feature flapper valve is a passive device that opens when the pressure inside the vessel is greater than that of the melter cave and allows the headspace to vent to the melter cave and C5V.	
Initiation: This function initiates when the LFP vessels contain LAW concentrate or a blended batch of LAW melter feed. If the LOP/LVP is not operating, the air amplifiers activate and vent the headspace. The overflow feature flapper valve is passive and will initiate ventilation when the pressure in the headspace becomes positive.	
Termination: This function terminates when the vessels are empty.	
Parallel or sequential functions: Transferring waste to the MFPV, MFV, and melter; mixing the waste with the agitator; adding glass formers; providing idle purge and emergency sparge air	
Applicable Modes: Normal operations; seismic DBE accident conditions	

Function: I.1	Receive Electrical Power
Detailed description: Electrical power to the LFP equipment and instruments is supplied by the LVE.	
Initiation: This function initiates when the LAW Facility is in startup operations.	
Termination: This function terminates when LAW glass production operations are complete.	
Parallel or sequential functions: All	
Applicable Modes: All modes	

Function: J.1	PCJ - Normal Controls to Support Monitoring, Control, and Communication
Detailed description: The LCP / LFP process shall be monitor and controlled by the PCJ system.	
Initiation: N/A	
Termination: This function terminates when LAW glass production operations are complete.	
Parallel or sequential functions: All	
Applicable Modes: Not credited for DBE	

Function: J.2	PPJ - Safety Instrumented Functions and Alarms to Support Monitoring, Control, and Communication
Detailed description: Automatic Safety monitoring and control functions are supported by the PPJ. The functions that are monitored and controlled by the PPJ are: • Melter Feed Vessel Level Instrumentation	
Initiation: This function initiates when the LAW Facility is in startup operations.	
Termination: This function terminates when LAW glass production operations are complete.	
Parallel or sequential functions: All	
Applicable Modes: Off-normal	

Appendix C Active Safety Instruments and Functions

The listed instruments are designated as having active safety functions, implemented through interface with and programming in the PPJ system. Information in the table below reflects the current design of active safety instruments, including functions, and safety designations per the P&IDs and associated equipment and instrument lists. In some cases the current safety classification of the SSCs in design is known to exceed the design requirements. The information will be updated as needed to reflect changes to the design. The information below is provided in support of Plant Engineering and Operations and does not represent design requirements.

Note: Only safety functions initiated in the LCP/LFP are listed. For other safety functions see the respective SDDs for those systems.

Function Title	Safety Designation	Sensors	Final Control Elements	Functional Description
Melter 1 Feed Vessel High Level Interlocks	SS	LFP-LT-1145	LFP-YV-1207 via YY-1207B and YC-1207B LFP-YV-1208 via YY-1208B and YC- 1208B	High level closes valves.
Melter 2 Feed Vessel High Level Interlocks	SS	LFP-LT-2145	LFP-YV-2207 via YY-2207B and YC-2207B LFP-YV-2208 via YY-2208B and YC- 2208B	High level closes valves.

Appendix D Reserved-System Procedures

Appendix E Reserved-System History

[Start body of appendix here]

ISSUED BY
RPP-WTP PDC

Document title:	**LAW Melter Handling (LMH) System Design Description**
Document number:	24590-LAW-3ZD-LMH-00001
Revision number:	0
Type:	☒ System Design Description ☐ Facility Design Description
Originator(s):	Andrew Foote
Checked by:	Neil Darwen
Checker's signature:	Signature — Date: 6/16/15
Concurrence:	~~Mark Johnson~~ Jeremy Wilkins 6/18/15
Concurrence signature:	LAW DPEM — Manager of Production Engineering Signature — Date: 6/18/15
Concurrence:	Ian Milgate
Concurrence signature:	Project Technical Director and Design Authority Signature — Date: 6/22/15
Approved by:	for Natalie Harkey
Approver's position:	Systems Engineering Manager
Approver's signature:	P. Townsend — Systems Engineering Manager Signature — Date: 6/23/15

Validation

– Signatures below indicate acceptance of the requirements established in Section 3 as the complete and correct set of requirements for this system relative to the requirement sources for which the Requirement Developer is responsible.

Appl.	Requirement Area	Designated Validator	Signature	Date
☐	Architectural Design			
☐	Civil/Structural Design			
☒	Controls & Instrumentation Design	A. Foote for Wayne Underhill per Email	Andrew Foote	6/9/15
☐	Criticality Safety			
☒	Electrical Design & AHJ	A. Foote for Gary Lucke Per Email	Andrew Foote	6/9/15
☒	Environmental Permitting (ESH)	A. Foote for Roger Landon Per Email	Andrew Foote	6/9/15
☒	Equipment Environmental Qualification	A. Foote for Govind Rajagopal Per Email	Andrew Foote	6/9/15
☒	Fire Protection Engineering	A. Foote for Ben Johnson Per Email	Andrew Foote	6/9/15
☒	HVAC Design	A. Foote for Julian Leam Per Email	Andrew Foote	6/9/15
☐	Industrial Safety/Hygiene (ESH)			
☐	Interface (External)			
☐	Interface (Internal)			
☒	Materials Engineering / Technology	A. Foote for Grant Mort Per Email	Andrew Foote	6/9/15
☒	Mechanical Handling Design	A. Foote for Julian Leam Per Email	Andrew Foote	6/9/15
☒	Mechanical Systems Design	A. Foote for Julian Leam Per Email	Andrew Foote	6/9/15
☐	Mission (WTP Contract functional/performance rqmts)			
☒	Nuclear Safety Engineering	A. Foote for John (Shan) Hill Per Email	Andrew Foote	6/9/15
☒	Operations Requirements Document	A. Foote for [redacted] Per Email	Andrew Foote	6/9/15
☒	Plant Design	A. Foote for Travis Vincent Per Email	Andrew Foote	6/9/15
☐	Plant Software Design			
☐	Process Engineering			
☒	Quality Assurance	A. Foote for Charles Albin Per Email	Andrew Foote	6/9/15
☒	Radiological Engineering	A. Foote for Russell Lanber Per Email	Andrew Foote	6/9/15
☐	Safeguards & Security			
☐	Startup			
☐	System Functions and Requirements			
☐	Transportation & Logistics			

* Validation not required for alpha/preliminary criteria documents.

History Sheet

Rev	Reason for revision	Revised by
0	Initial issue. Supersedes 24590-LAW-3YD-LMH-00001, rev. 3, *System Description for the LAW System LMH Melter Handling System (LMH).*	Andrew Foote

Contents

1 Introduction 1
1.1 System Identification 1
1.2 Limitations and Scope 1
1.3 Ownership and Maintenance 2
1.4 Definitions/Glossary 2
1.5 Acronyms and System Designators 3
2 General Overview 4
2.1 System Functions/Safety Functions 8
2.2 System Classification 8
2.3 Basic Operational Overview 8
3 Design Requirements 10
3.1 Requirements 10
3.2 Bases 11
3.3 References 11
3.4 General Requirements 11
3.4.1 Mission and Functional / Performance Requirements (Including States/Modes) 11
3.4.2 Nuclear Safety, ALARA, Environmental, and Other Regulatory Requirements 14
3.4.3 System Interface Requirements 15
3.4.4 Other Technical, Specialty, Operations and Maintenance Requirements 16
3.5 Crane/Hoist Requirements 16
3.5.1 Mission and Functional / Performance Requirements (Including States/Modes) 16
3.5.2 Nuclear Safety, ALARA, Environmental, and Other Regulatory Requirements 17
3.5.3 System Interface Requirements 17
3.5.4 Other Technical, Specialty, Operations and Maintenance Requirements 17
3.6 Melter Transfer Path Components 18
3.6.1 Mission and Functional / Performance Requirements (Including States/Modes) 18
3.6.2 Nuclear Safety, ALARA, Environmental and Other Regulatory Requirements 19
3.6.3 System Interface Requirements 19
3.6.4 Other Technical, Specialty, Operations and Maintenance Requirements 19
3.7 Monitoring and Controls Requirements 19
Mission and Functional / Performance Requirements (Including States/Modes) 19
3.7.1 19
3.7.2 Nuclear Safety, ALARA, Environmental and Other Regulatory Requirements 20
3.7.3 System Interface Requirements 20
3.7.4 Other Technical, Specialty, Operations and Maintenance Requirements 20
3.8 Relevant Codes and Standards 22
3.8.1 Codes of Record 22
3.8.2 WTP Design Criteria, Design Guides, and General Specifications 23
4 System Description 25
4.1 Configuration Information 25

4.1.1 Description of System, Subsystems, and Major Components 25
4.1.2 Boundaries and Interfaces 34
4.1.3 Physical Layout and Location 35
4.1.4 Principles of Operation 36
4.1.5 System Reliability Features 37
4.1.6 System Control Features 37

4.2 Operations 37
4.2.1 Initial Configuration (Pre-startup) 37
4.2.2 System Startup 37
4.2.3 Normal Operations 37
4.2.4 Off-Normal Operations 37
4.2.5 System Shutdown 37
4.2.6 Safety Management Programs and Administrative Controls 38

4.3 Testing and Maintenance 38
4.3.1 Temporary Configurations 38
4.3.2 TSR-Required Surveillances 38
4.3.3 Non-TSR Inspections and Testing 38
4.3.4 Maintenance 38

4.4 Supplemental Information 38

5 References and Design Documents List 38

5.1 Source / Basis References 39

5.2 Other References 39

5.3 System Design Documents 41

Appendices

Appendix A - Test Objectives, Conditions, and Acceptance Criteria A-1

Appendix B - Descriptions of System Functional Flow and Interactions B-1

Appendix C - Active Safety Instruments and Functions C-5

Appendix D - Reserved - Operation Procedures D-1

Appendix E - Reserved - System History E-1

Tables

Table 2-1 Functional Analysis and Crosswalk to Requirements 10

Table 3-1 LMH Seismic Design Categories 13

Table 3-2 LMH System Safety Designations 14

Table 3-3 LMH System Interfaces 16

Table 3-4 LMH Applicable Codes and Standards 23

Table 3-5 WTP Design Criteria, Guides, and General Specifications Applicable to LAW LMH 24

Figures

Figure 2-1 Low-Activity Waste Melter Handling System Context Diagram 5
Figure 2-2 LMH System LSM Import/Export Plan View, Elevation +3'-0" 6
Figure 2-3 LMH System Simplified Mechanical Flow Diagram LSM Position and Winch Arrangement 7
Figure 2-4 Low-Activity Waste Melter Handling System Functional Block Diagram 9
Figure 4-1 Rail System 27
Figure 4-2 Seismic Anchor Pin 28
Figure 4-3 Winch Assembly 29
Figure 4-4 Removable Pulley Blocks 30
Figure 4-5 Pulley Blocks 31
Figure 4-6 Over-Travel Restraints 31
Figure 4-7 C1/C2 Airlock Monorail 33

1 Introduction

1.1 System Identification

This system design description (SDD) defines the technical and functional/performance requirements of the low-activity waste (LAW) Facility melter handling system (LMH) of the Hanford Tank Waste Treatment and Immobilization Plant (WTP). This document details the melter handling requirements, environmental compliance requirements, and authorization basis requirements of the LMH system as it is currently known and understood. This SDD describes the process and functional requirements of the LMH system, including the following:

- Services and utility requirements, operating materials and supplies, and other external interfaces
- Operations limits and design bases
- Other criteria and requirements pertinent to LMH design

The LMH system transfers new and failed or spent Locally Shielded Melters (LSM) and other equipment between the melter assembly pad and the melter gallery. The boundaries, system interfaces, and functional description of the LMH system are provided in Section 2.

1.2 Limitations and Scope

The scope of this document is to provide an authoritative source for the collected set of requirements applicable to the design of the LMH system inclusive of interface requirements with other systems. The SDD is prepared in accordance with 24590-WTP-3DP-G04B-00093, *System and Facility Design Descriptions*. The intended use of these collected requirements is to establish the following:

- Inform the LMH system design effort.
- Provide a validated basis upon which to confirm implementation of design requirements.
- Provide the expected means of verification for requirements, including those that are post-construction (i.e., startup and commissioning test objectives and acceptance criteria).

All requirements established in this document are intended to be verified as implemented in the design and/or physical configuration using a graded approach commensurate with importance and risk.

Where numeric values are provided within requirements in Section 3, these values are provided without additional margin. For example if a value is established in 24590-WTP-DB-ENG-01-001, *Basis of Design* (BOD), no attempt is made to remove any margin that may or may not have gone into the establishment of that value; neither has any margin been added. Where values are stated as minimums or maximums, there is no exception that additional margin be applied in the verifications that the design requirements have been met. Testing required to be performed in accordance with external codes and standards must follow the rules established in those documents.

This document is intended to be used in support of design development, design verification, turnover, startup testing, and commissioning activities. This document will be maintained current relative to changes in source requirements documents. Updates shall be made concurrent with these changes to source requirements, or implementation shall be tracked for completion in accordance with 24590-WTP-GPG-ENG-0170, *Impact Evaluation*.

Engineers are expected to be able to use the requirements in Section 3 of this document as input for design development without recourse to the upper-tier source documents or searches of the Design Criteria Database (Technical Requirements Management System). Design engineers are still required to ensure that requirements contained within the discipline or functional standards incorporated by reference in Section 3 are followed. These documents contain additional criteria that are based on applications of external codes/standards, corporate best practices, and engineering management expectations for a consistent approach to design.

Certain requirement statements in this document are preceded by a "**[HOLD]**" notation. This notation is used when there are unresolved technical issues, known inconsistencies among source requirements, or other management suspensions of work requiring resolution. Requirements with the "**[HOLD]**" notation may be used to proceed with preliminary or committed design (with inclusion of appropriate holds) but shall not be used in support of fabrication or construction until the "**[HOLD]**" is removed.

The contents of Section 4 are being developed in a phased approach in support of future operations and maintenance. At this revision, only the contents of Sections 4.1.1 through 4.1.4 and 4.1.6 have been updated and verified. Sections 4.1.5, 4.2, 4.3 and 4.4 are currently reserved and will be updated in a later phase to support completion of these sections has been completed.

1.3 Ownership and Maintenance

The Design Authority (DA) organization is responsible for the preparation and maintenance of this document through turnover of the included systems to Operations. Thereafter, maintenance of this document is the responsibility of the Plant Engineering organization; however, the Engineering DA organization retains responsibility for the establishment and definition of design requirements.

1.4 Definitions/Glossary

Confinement – For consistency, regardless of usage elsewhere, *confinement* is used in this document to denote the controls used to prevent or minimize the release or migration of airborne contaminants, including aerosols, hazardous vapors, or gases.

Containment – For consistency, regardless of usage elsewhere, *containment* is used in this document to denote the controls used to prevent or minimize the release or migration of liquid or liquid-entrained contaminants.

Primary confinement/containment – The structures, systems, or components (SSCs) and their associated boundaries that confine/contain airborne and liquid contaminants under normal conditions.

Secondary confinement/containment – The SSCs or other design features that capture and prevent further spread or migration of airborne/liquid contaminants after they have escaped primary confinement or containment.

1.5 Acronyms and System Designators

Acronyms

AISC	American Institute of Steel Construction
ALARA	as low as reasonably achievable
ANSI	American National Standard Institute
ASCE	American Society of Civil Engineers
ASME	American Society of Mechanical Engineers
AWS	American Welding Society
BOD	*Basis of Design*
CM	commercial
COM	commissioning
CON	construction
CTN	component tag number
DA	Design Authority
DOE	US Department of Energy
ENG	Engineering
EQP	equipment qualification package
E-stop	Emergency Stop
GTC	general test criteria
HI	hoist maximum lift height value
FAC	functional acceptance criteria
HVAC	heating, ventilation, and air conditioning
ICD	interface control document
ICN	Integrated Control Network
IEEE	Institute of Electrical and Electronics Engineers
LAW	Low-Activity Waste (Facility)
LOW	hoist lower lift height value
LSM	locally shielded melter
NFPA	National Fire Protection Association
NPH	natural phenomena hazard
ORD	operations requirements document
P&ID	piping and instrumentation diagram
PDSA	preliminary documented safety analysis
PES	Programmable Electronic System
Q	quality-related
REC	receiving
ROIN	requirement object identification number

SC	safety class
SC-X	seismic category
SDD	system design description
SRD	*Safety Requirements Document, Volume II*
SS	safety significant
SSC	structures, systems, or components
SQR	supplier quality representative
SU	startup
SUB	subcontractor
TAC	test acceptance criteria
WAC	Washington Administrative Code
WTP	Hanford Tank Waste Treatment and Immobilization Plant

System Designators

LMH	LAW melter handling system
LMP	low activity waste melter system
LPH	LAW container pour handling system
LVE	low voltage electrical (480/208/120 V) system
MHJ	Mechanical handling control system

2 General Overview

The LMH system provides the mechanical handling equipment to move melters and other maintenance equipment into and out of the melter gallery in the LAW facility. The LAW melters have an operational lifespan estimated to be 5 years, and the WTP is to operate for 40 years. Given the shielding and containment concerns, as well as the size, weight, and acceleration limitations of the LAW melters, a dedicated system of resources is required for melter installation and removal. Once the melter reaches the end of its operational lifetime, the LMH system retrieves the spent or failed melter and moves it to the melter assembly pad.

Figure 2-1 provides a contextual depiction of the LMH system in terms of its primary interrelationships with other systems and utilities. This diagram does not differentiate among some utilities that have both normal and safety service provisions. This diagram is used in support of functional and performance definition at the system level. Bold, blue arrows are used in the figure to highlight the primary functions of the LMH, while the black arrows illustrate the supporting systems and utilities. Figure 2-2 and Figure 2-3 provide a plan view and a process flow diagram, respectively, of the overall LMH system showing melter import and export. Refer to Section 1.5 for the list of relevant system designators.

Figure 2-1 Low-Activity Waste Melter Handling System Context Diagram

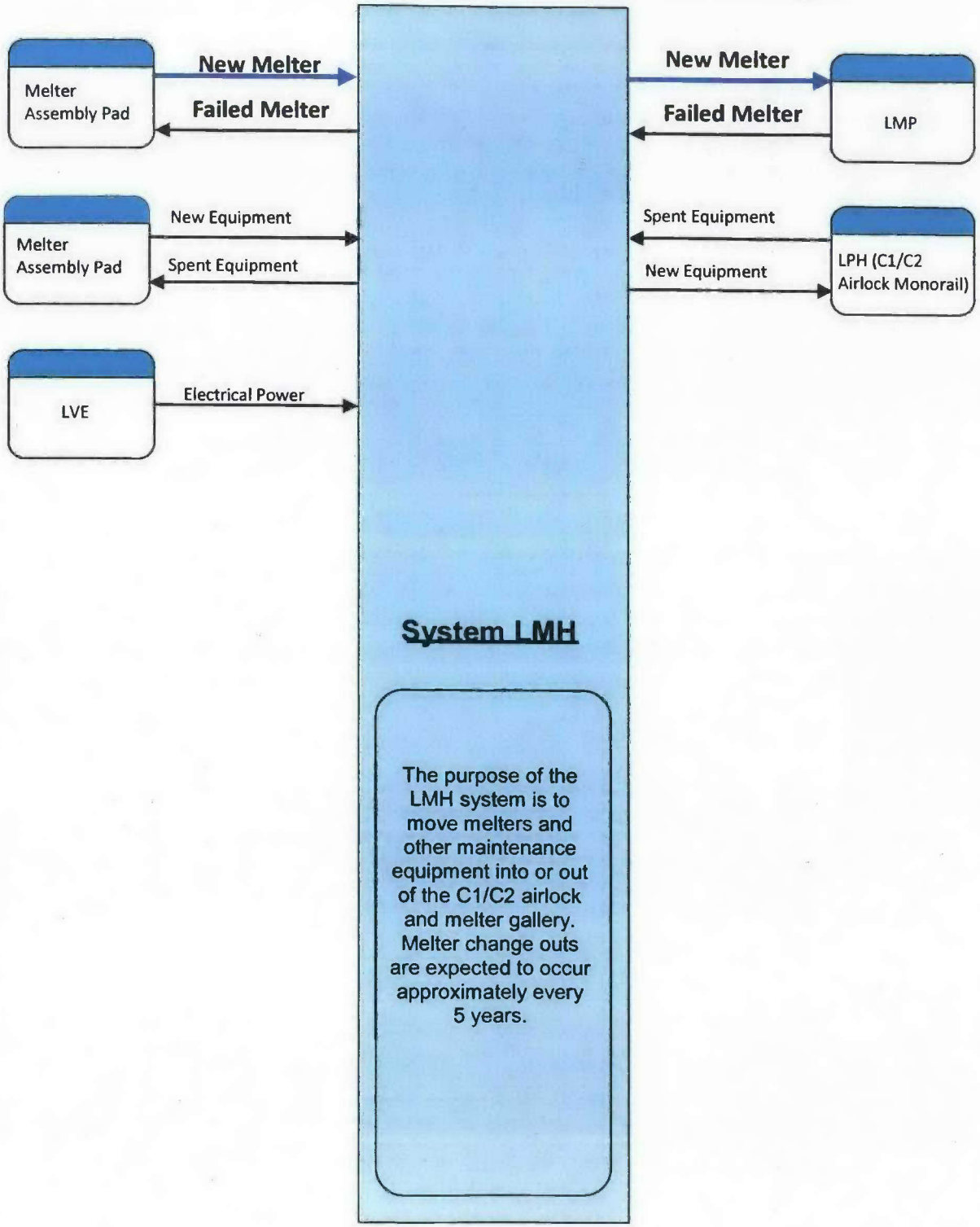

Figure 2-2 LMH System LSM Import/Export Plan View, Elevation +3'-0"

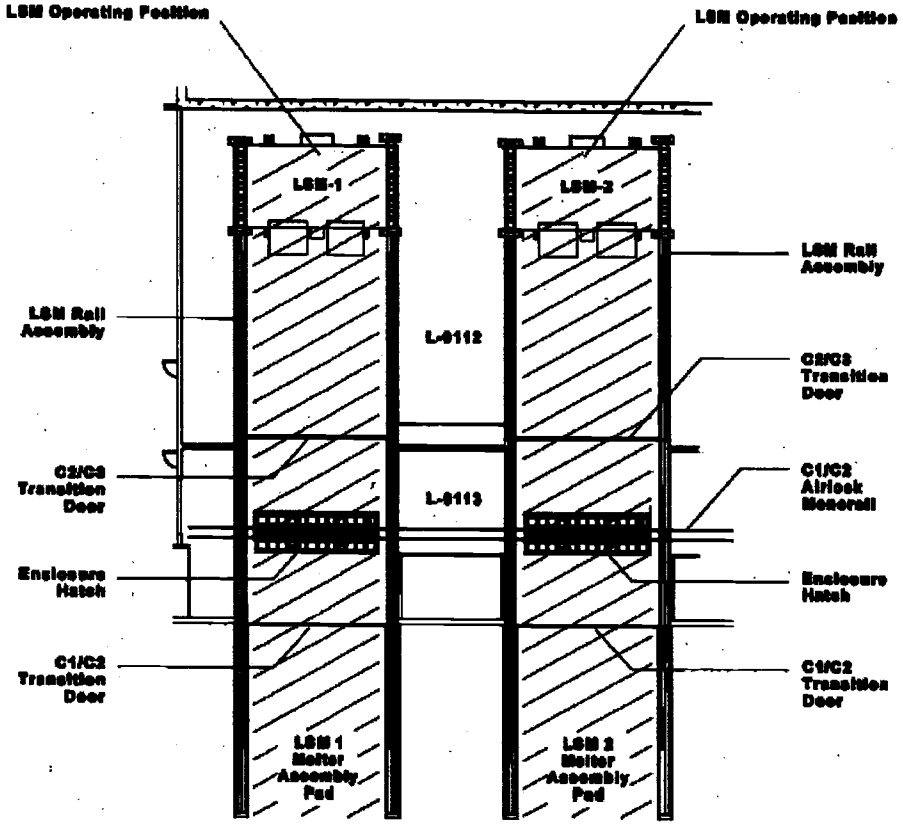

Figure 2-3 LMH System Simplified Mechanical Flow Diagram LSM Position and Winch Arrangement

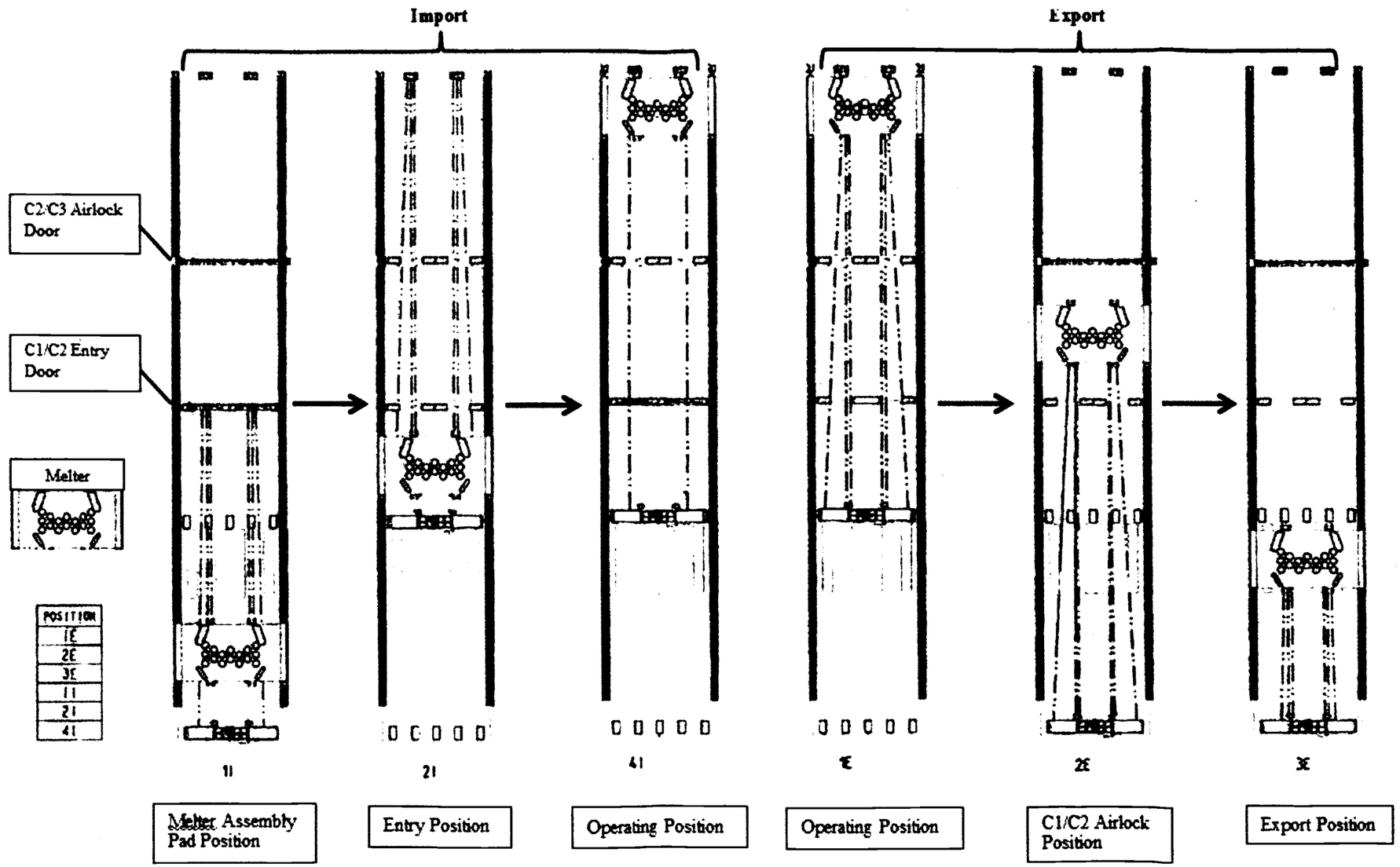

2.1 System Functions/Safety Functions

This section defines the LMH functions and attributes that need to be addressed by the system design. Figure 2-4 provides the functional block diagram for the LMH system, indicating the internal and external systems and utilities that provide the primary support or interface for that function. Section 3 provides the design and performance design requirements to meet both functional and other requirements.

System interfaces are provided for reference only. See Section 1.5 for the list of relevant system designators.

The functions included in Figure 2-4 are the primary and secondary level functions of the LAW LMH system. These functions are further described in Table 2-1. Where appropriate to support definition of functional and design requirements, functions have been further decomposed and additional levels of supporting functions are also described. The requirement section number provides the location of the applicable functional analysis incorporated into system requirements.

Appendix B provides a further decomposition of system functions, including initiating, terminating, and integrating events and functions.

2.2 System Classification

The LMH system contains components with the following classifications/designations:

- ☐ Safety Class
- ☒ Safety Significant
- ☒ Dangerous Waste Permit affecting
- ☐ Air Permit affecting
- ☐ Waste Acceptance Impacting (WAI)
- ☒ General

2.3 Basic Operational Overview

A functional description of the system is provided in Sections 2 and 2.1 which provide the context diagram for the system, interfaces with other systems, a simplified system diagram, a functional block diagram, and descriptions of the system functions. A basic operational system overview is described in this section. Detailed operational information is provided in Section 4.

The LMH system is located in the LAW facility of the WTP. The LMH system transports new and spent/failed melters into and out of the LAW melter gallery, as well as other maintenance equipment. The LAW winch assembly and dedicated LAW melter rails are used to move a new or spent/failed melter from the melter assembly pad to a melter gallery interface point and back. Melters require travel through the C1/C2 airlock and its associated entry and airlock doors on their way through the LAW facility. Entry and airlock doors are provided with one motor and have two position switches, which identify door position (open or closed). Entry and airlock doors are administratively controlled.

Figure 2-4 Low-Activity Waste Melter Handling System Functional Block Diagram

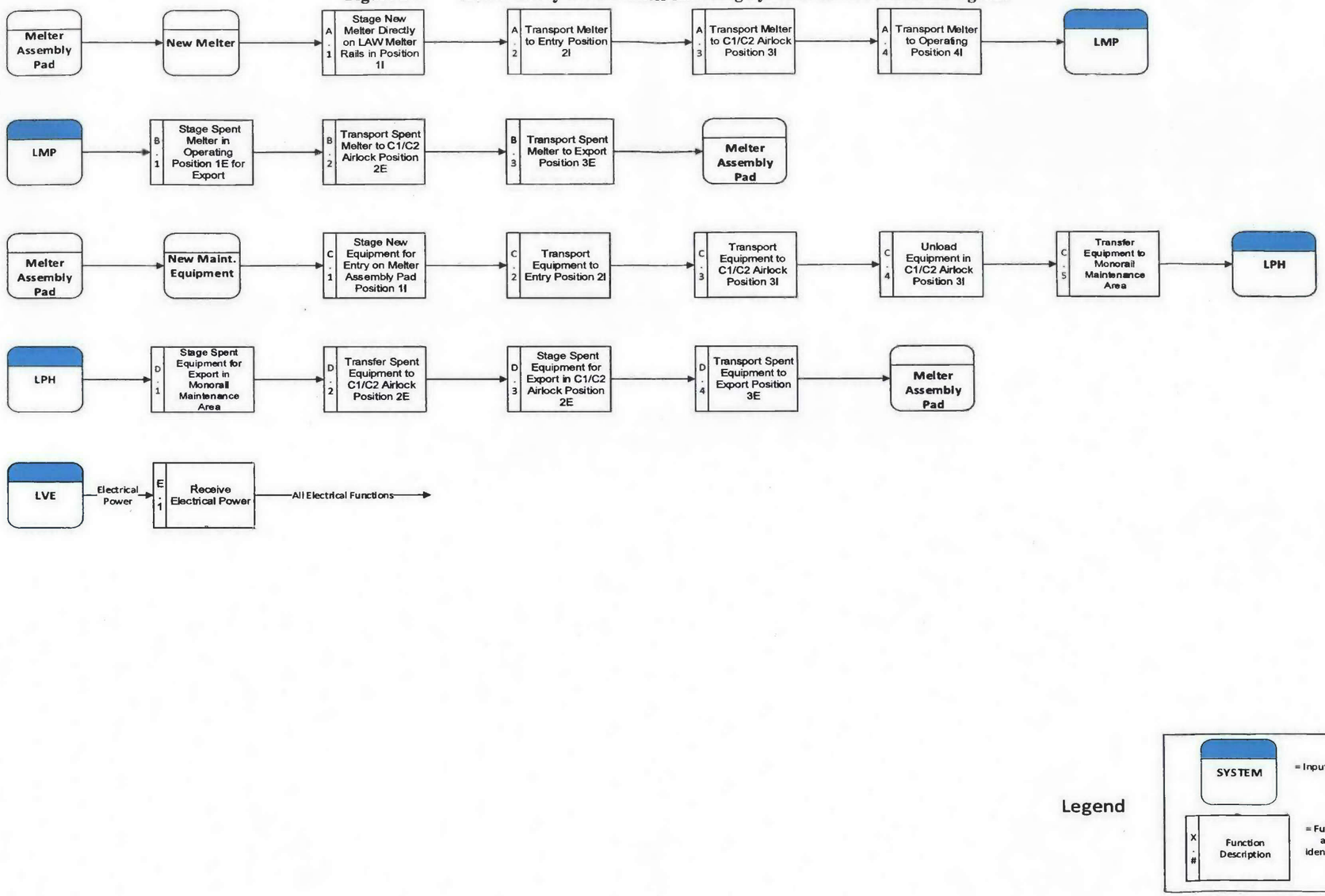

Table 2-1 Functional Analysis and Crosswalk to Requirements

Reference	Functional Analysis Description	Requirement Section No.
A.	**Transfer New Melter to Melter Gallery**	**N/A**
A.1	Stage new melter directly on LAW melter rails in position 1I – The melter will be assembled and staged directly on the LAW melter rails located on the melter assembly pad.	3.6.1.1
A.2	Transport melter to entry position 2I – The fully assembled melter is transported on the LAW melter rails to the entry position 2I.	3.6.1.1
A.3	Transport melter to C1/C2 airlock position 3I – The melter is transported on the LAW melter rails to the C1/C2 airlock position 3I.	3.6.1.1
A.4	Transport melter to operating position 4I – The melter is transported on the LAW melter rails to the operating position 4I.	3.6.1.1
B.	**Transfer Spent Melter to Melter Assembly Pad**	**N/A**
B.1	Stage spent melter in operating position 1E for export – The spent melter is staged in operating position 1E for export.	3.6.1.1
B.2	Transport spent melter to C1/C2 airlock position 2E - The spent melter is transported on the LAW melter rails to the C1/C2 airlock position 2E.	3.6.1.1, 3.6.1.2
B.3	Transport spent melter to export position 3E – The spent melter is transported on the LAW melter rails to the export position 3E.	3.6.1.1, 3.6.1.2
C.	**Import of Maintenance Equipment**	**N/A**
C.1	Stage new equipment for entry on melter assembly pad position 1I –New equipment is prepared and staged for entry on the melter assembly pad.	3.6.1.3
C.2	Transport equipment to entry position 2I – The new equipment is transported to the entry position 2I.	3.6.1.3
C.3	Transport equipment to C1/C2 airlock position 3I – The new equipment is transported to the C1/C2 airlock position 3I	3.6.1.3
C.4	Unload equipment in C1/C2 airlock position 3I – The new equipment is unloaded in the C1/C2 airlock position.	3.6.1.3
C.5	Transfer equipment to monorail maintenance area– The new equipment is transferred to the LAW container pour handling system (LPH) monorail maintenance area.	3.4.3, 3.5.1.2
D.	**Export of Maintenance Equipment**	**N/A**
D.1	Stage spent equipment for export in monorail maintenance area –Spent equipment is prepared and staged for export in the LPH monorail maintenance area.	3.4.3
D.2	Transfer spent equipment to C1/C2 airlock position 2E– The t spent equipment is transferred to the C1/C2 airlock position 2E.	3.4.3, 3.5.1.2
D.3	Stage Spent Equipment for Export in C1/C2 Airlock Position 2E – The spent equipment is prepared in the C1/C2 airlock position for export.	3.6.1.3
D.4	Transport spent equipment to export position 3E – The spent equipment is transported to the export position 3E for disposal.	3.6.1.3
E.	**Electrical Power**	**N/A**
E.1	Receive Electrical Power – the low voltage electrical system (LVE) provides electrical power to the LMH equipment and instruments	3.4.3

3 Design Requirements

3.1 Requirements

Requirements are documented in Section 3.4 through Section 3.8. Each requirement statement is accompanied by a basis discussion (as needed) and the expected means of verification. Requirements must be met in design. If a

requirement stated in this document cannot be met in design, a revision to the requirement needs to be pursued, if possible, or the design must be changed to meet the requirement. Requirements preceded by "**[HOLD]**" may only be used in support of preliminary or committed design, which shall also be issued with appropriate holds, per procedure 24590-WTP-3DP-G04B-00046, *Engineering Drawings*. These requirements may not be used in support of fabrication or construction.

The following abbreviations are used to designate the selected method for verification (see 24590-WTP-GPG-ENG-0161, *Technical Requirements Management*, for additional guidance concerning methods of verification):

(I) Inspection
(A) Analysis
(D) Demonstration
(T) Test

The following abbreviations are used to designate the organization responsible for performing the verification:

(ENG) Engineering
(CON) Construction
(SU) Startup
(COM) Commissioning
(SUP) Supplier
(SUB) Subcontractor
(SQR) Supplier Quality Representative
(REC) Receiving

3.2 Bases

Basis discussions are provided as needed to explain the decomposition or interpretation from the originating source requirement(s). Where a "**[HOLD]**" has been applied to a requirement, this section will include the basis for the "HOLD."

3.3 References

The requirements include a source document reference and a requirement object identification number (ROIN) included in brackets following the requirement statement. Each unique source document reference, with ROIN number(s), is bracketed separately. Requirements may include a reference to Section 2.2, Functional Description, listed in parentheses following the source document and ROIN number references. A complete listing of all source references is provided in Section 5.1.

3.4 General Requirements

3.4.1 Mission and Functional / Performance Requirements (Including States/Modes)

3.4.1.1 Design (Operating) Life

Requirement: Non-replaceable, permanent LMH system plant equipment shall be designed for a minimum design life of 40 years, inclusive of maintenance. All non-maintainable items of LMH system equipment shall be designed to last the life of the facility (40 years). Design life of equipment shall consider the effects of chemical, radiological and thermal exposure. [Sections 11.1.1, 11.7.4, BOD, ROIN: 1-41120, ROIN: 1-41121B, ROIN: 1-41210]

Basis Discussion: Equipment and material selection is based on proven performance, value engineering principles, and fit-for-function principles. The selection of equipment and materials is further addressed in detail as the design progresses. Equipment design needs to consider the routine environmental exposures under normal operations for non-safety equipment; safety equipment also considers abnormal and emergency exposures—this minimizes the need for equipment maintenance, exposure, and radiological waste generation in radiological areas. [ALARA]

Verification: Verification is expected to be achieved through the following:

Verif. Method	Verif. By	Plan	Notes/Comments
I	ENG	The "qualified" design life verification for safety SSCs is to be verified through review of equipment design as documented in equipment qualification packages.	Design life for safety equipment may be documented in equipment qualification packages.
I	ENG	Review design to verify design life of non-replaceable, non-maintainable SSCs is documented in procurement documents and supported by supplier certificates of conformance.	May be documented in an assessment/evaluation.

3.4.1.2 Room Environment Conditions for Non-Safety SSCs

Requirement: The LAW Facility LMH system equipment and components tagged as non-safety shall be designed to operate and withstand the internal environment conditions of the LAW Facility. [Section 12, Table 12-1, BOD, ROIN: 2-39186, ROIN: 2-39187, ROIN: 2-39193][Sections 11.16, 16.1, ORD, ROIN: 14-1248E, ROIN: 8-7000]

Basis discussion: Non-safety SSCs are designed to function as intended in the room environment conditions associated with their location.
[ALARA]

Verification: Verification is expected to be achieved through:

Verif. Method	Verif. By	Plan	Notes/Comments
I	ENG	Review of design of non-safety SSCs to verify compliance with BOD Table 12-1 conditions.	May be documented in an evaluation/assessment report

3.4.1.3 Seismic Design

Requirement: The LMH system equipment shall be designed and qualified for seismic conditions in accordance with Table 3-1 below. [Safety Criterion 4.1-3, SRD, ROIN: 1-38653, ROIN: 8-14293] [Sections 4.4.2.3, 5.6.4, 3.3.4.2, Appendix 3A Table 3A-7, PDSA - LAW Facility, ROIN: 8-3075, ROIN: 8-1286, ROIN: 8-5263, ROIN: 40-3187] [Section 11.7.3, BOD, ROIN: 8-13210, ROIN: 8-13211]

Table 3-1 LMH Seismic Design Categories

Description	Seismic Category	Reference
LAW melter rail assemblies (LMH-RAIL-00001, LMH-RAIL-00002, LMH-RAIL-00003, LMH-RAIL-00004)	SC-III	Sections 3.3.4.2, 4.4.2.3, 5.6.4, Appendix 3A Table 3A-7, PDSA – LAW Facility, ROIN: 8-3075, ROIN: 8-1286, ROIN: 8-5263, ROIN: 40-3187

Basis discussion: Section 2.4.12 of 24590-WTP-PSAR-ESH-01-002-01, *Preliminary Documented Safety Analysis to Support Construction Authorization; General Information* states "All components and parts of the equipment that provide or contribute to the safety functions and accident monitoring functions, including equipment supports and anchorage, shall be qualified accordingly." This qualification ensures SSCs meet the designated seismic design requirements. The 24590-WTP-SRD-ESH-01-001-02, *Safety Requirements Document Volume II* (SRD), Safety Criterion 4.1-3 details the equivalence of the WTP seismic category to the seismic performance category of DOE-STD-1020-94, *Natural Phenomena Hazards Design and Evaluation Criteria for Department of Energy Facilities*. The SRD also states that SSCs designated as safety SSCs be designed to withstand the effects of natural phenomena hazard events (e.g., earthquakes, wind, and floods) without loss of capability to perform specified safety functions.

Verification: Verification is expected to be achieved through the following:

Verif. Method	Verif. By	Plan	Notes/Comments
A/T	ENG/ SUP	Analysis or testing performed on safety SSCs to verify capability to withstand seismic event.	This is expected to be documented in the equipment qualification packages.
I	ENG	Review of design to verify conformance to the results of the analysis requirements and to verify that the safety function, as established in the PDSA is correctly reflected in the equipment qualification documents.	May be accomplished by EQP or separate evaluation/assessment.

3.4.1.4 Seismic Interaction

Requirement: Interaction effects shall be considered when determining the seismic category of individual items and, where an adverse seismic interaction with safety class (SC) or safety significant (SS) equipment exists, adequate measures shall be taken to preclude the adverse interaction. [Safety Criterion 4.1-3, SRD, ROIN: 1-38653] [Section 10.2.15, BOD, ROIN: 45-21847, ROIN: 45-21848]

Basis discussion: In accordance with [GPG-ENG-033], equipment that is non-safety may be identified as having a potential for adverse interaction with safety equipment during a seismic event. Where a resolution strategy is selected to increase the seismic category of the source SSC to protect the safety (target) SSC, the resulting seismic category of the equipment may be greater than SC-IV. In those cases, the equipment design must be verified to meet the higher seismic performance category such that the target SSC is protected.

Based on 24590-WTP-PSAR-ESH-01-002-01, *Preliminary Documented Safety Analysis to Support Construction Authorization; General Information*, seismic category IV piping are categorized as follows: i) non-safety piping and without an inventory of radioactive or hazardous material, but require seismic protection. ii) safety piping, but without seismic safety function. In accordance with 24590-WTP-GPG-M-036, *Determining Quality Level and Seismic Category Classification of Sub-Components, Assemblies, Sub-Assemblies, and Parts,* seismic category IV

are SSCs that do not provide primary confinement of significant inventories of radioactive materials. Seismic category IV includes non-safety SSCs that required seismic protection per the Uniform Building Code (UBC).

As discussed in 24590-WTP-PSAR-ESH-01-002-01, *Preliminary Documented Safety Analysis to Support Construction Authorization; General Information*, Seismic Category V piping does not require any seismic consideration. Seismic Category V items include lockers, bicycles racks, desks, etc. per 24590-WTP-GPG-M-036, *Determining Quality Level and Seismic Category Classification of Sub-Components, Assemblies, Sub-Assemblies, and Parts.*

Verification: Verification is expected to be achieved through:

Verif. Method	Verif. By	Plan	Notes/Comments
I	ENG	Perform an evaluation of the LAW Facility LMH system to verify seismic categorization of equipment based on interaction effects per 24590-WTP-GPG-ENG-033 and devise a control strategy for all open interactions.	
A/T	ENG/SUP	Analysis or testing performed on SSCs to demonstrate the ability to withstand the seismic loadings for their respective seismic categories to the extent necessary to prevent interactions.	May be documented in an equipment seismic qualification review or supplier seismic design report.
I	ENG	Review design to verify conformance to the as-tested/as-analyzed configuration.	

3.4.2 Nuclear Safety, ALARA, Environmental, and Other Regulatory Requirements

3.4.2.1 Safety Designations

Requirement: The following SSCs shall be designated as safety SSCs. [Safety Criterion 4.4-1, 4.1-2, 4.1-3, SRD, ROIN: 1-38690, ROIN: 1-38650, ROIN: 1-38653] [Sections Appendix 3A Table 3A-7, 4.4.2.3, PDSA - LAW Facility, ROIN: 40-3187, ROIN: 8-3075]

Table 3-2 LMH System Safety Designations

Equipment/ Component Description	Safety Function	Safety Classification	References
LAW melter rail assemblies and seismic anchor pins (LMH-RAIL-00001, LMH-RAIL-00002, LMH-RAIL-00003, LMH-RAIL-00004)	Reduces the frequency of an accident by providing seismic restraint of the melter while operating.	SS	Appendix 3A Table 3A-7, PDSA – LAW Facility

Basis Discussion: None.

Verification: Verification is expected to be achieved through the following:

Verif. Method	Verif. By	Plan	Notes/Comments
I	ENG	Review design to verify identification of the correct safety classification, as established in the PDSA/DSA.	EQP is issued and verified to align with the PDSA/DSA. Review is expected to be joint effort between design agency and EQ group.

3.4.2.2 Design Life

3.4.2.2.1 Room Environment Conditions for Safety SSCs

Requirement: The safety SSCs in the LAW Facility LMH system credited with a safety function and post accident monitoring instruments (24590-LAW-RPT-ENS-12-001, LAW Post Accident Monitoring Report) shall be designed to operate and withstand the most severe environmental conditions identified for the room in which they are installed, inclusive of aging effects, throughout their qualified life. [Safety Criterion 4.4-1, SRD, ROIN: 1-38690][Section 11.7.3, BOD, ROIN: 8-13210, ROIN: 8-13212]

Basis discussion: Safety SSCs designated as Safety Class (SC) or Safety Significant (SS) are designed and qualified to perform their safety function as intended in the environments associated with the events for which they are intended to respond. The effects of aging on normal and abnormal functioning are considered in design and qualification. LAW Room Environmental Data Sheet, 24590-LAW-U0D-W16T-00001, identifies environmental conditions for rooms that house safety SSCs.
[ALARA]

Verification: Verification is expected to be achieved through the following:

Verif. Method	Verif. By	Plan	Notes/Comments
A/T	ENG/SUP	Perform analysis or testing to verify the ability of the SSCs credited with a safety function and post accident monitoring to withstand the specified environmental conditions.	Document in EQP. See 24590-LAW-U0D-W16T-00001, *LAW Room Environment Data Sheet* for room environmental conditions.
I	ENG	Review of design of safety SSCs to verify conformance to the as-tested/analyzed configuration.	May be documented in an evaluation/assessment or EQP

3.4.3 System Interface Requirements

The LMH system interfaces are listed in Table 3-3 below: (C.5) (D.1, D.2) (E.1)

Table 3-3 LMH System Interfaces

System Locator	System Name	Nature of Interface
LMP	LAW Melter Process System	Utilizes LMH rail assemblies in order to interface with the LSM.
LPH	LAW Container Pour Handling System	Supplies spent equipment for export and accepts new equipment for import through hatches located between C1/C2 airlock and LPH monorail maintenance room.
LVE	Low Voltage Electrical System	Supplies electrical power to the LMH equipment and instruments.

3.4.4 Other Technical, Specialty, Operations and Maintenance Requirements

3.4.4.1 Equipment Decontamination

Requirement: The LMH system subject to decontamination shall be designed to withstand this process without any reduction of functionality through degradation of the electrical, mechanical, or any other components involved. [Sections 9.1, 14.16, ORD, ROIN: 8-8065, ROIN: 8-475][Section 11.8.3.2, BOD, ROIN: 2-43173]

Basis discussion: Equipment operating in a contaminated environment is monitored and, if necessary, decontaminated before maintenance. The specifications must convey that the equipment design accounts for these processes.

The LAW Facility is a hands-on maintenance facility and cranes shall be decontaminated using local decontamination methods such as wipes, strippable coating and tack cloths in lieu of gross decontamination methods (steam, warm water, detergent solutions). [ALARA]

Verification: Verification is expected to be achieved through:

Verif. Method	Verif. By	Plan	Notes/Comments
I	ENG	Review the LMH design to verify that equipment can withstand decontamination without degradation or reduction in equipment functionality	May be documented in an evaluation/assessment report. Ops to participate in or review evaluation/assessment

3.5 Crane/Hoist Requirements

3.5.1 Mission and Functional / Performance Requirements (Including States/Modes)

3.5.1.1 Codes and Standards

Requirement: Overhead electric wire rope hoists shall be designed per ASME B30.16. [Section 11.1.2, BOD, ROIN: 40-10531]

Basis Discussion: None.

Verification: Verification is expected to be achieved through the following:

Verif. Method	Verif. By	Plan	Notes/Comments
I	ENG	Review of C1/C2 airlock monorail design to verify adherence to applicable codes and standards.	

3.5.1.2 Lifting Capacity

Requirement: Cranes/hoists shall be designed with sufficient capacity to lift new or spent/failed LPH equipment, in conjunction with applicable lifting beams or apparatus. [Section 20, ORD, ROIN: 8-4687] (C.5) (D.2)

Basis Discussion: None.

Verification: Verification is expected to be achieved through the following:

Verif. Method	Verif. By	Plan	Notes/Comments
I	ENG	Review of crane/hoist design to verify crane/hoist capacity meets or exceeds the heaviest required lift to and from the LPH monorail maintenance area.	May be documented in an evaluation/assessment.

3.5.1.3 Modular Construction of Cranes/Hoists

Requirement: Cranes/hoists shall be designed to be standardized and of modular construction to facilitate removal and replacement of failed components to dedicated maintenance areas. Components between cranes/hoists shall be standardized and interchangeable. Components shall also be oriented such that the time for maintenance will be minimized. In Addition, modules shall have quick connectors to allow rapid reconnection of cabling or other services. [Section 14.16, ORD, ROIN: 1-40089, ROIN: 8-472, ROIN: 8-469][Section 11.8.3.2, BOD, 2-43170]

Basis Discussion: It is anticipated that the number of modules for hoists will be limited.

Verification: Verification is expected to be achieved through the following:

Verif. Method	Verif. By	Plan	Notes/Comments
I	ENG	Review the C1/C2 airlock monorail design to confirm modular construction and design commonality with other LAW hoists.	May be documented in an evaluation/assessment report.

3.5.2 Nuclear Safety, ALARA, Environmental, and Other Regulatory Requirements

None.

3.5.3 System Interface Requirements

None.

3.5.4 Other Technical, Specialty, Operations and Maintenance Requirements

3.5.4.1 Crane/Hoist Brakes

Requirement: Brakes on all cranes/hoists shall be designed to set when power is off. [Section 14.16, ORD, ROIN: 8-478][Section 11.8.3.2, BOD, ROIN: 2-43174]

Basis Discussion: To prevent the cranes/hoists from raising or lowering when not in operation, the brakes on the cranes/hoists drive functions set when the power is off.

Verification: Verification is expected to be achieved through the following:

Verif. Method	Verif. By	Plan	Notes/Comments
I	ENG	Review design to verify brakes are set when crane and hoist power is off	
D	SU/COM	Demonstrate that all crane/hoist brakes are set when power is off.	

3.5.4.2 Lubrication Systems

Requirement: Crane/hoist systems shall be designed with lubrication systems that are accessible for ease of maintenance. [Section 14.16, ORD, ROIN: 8-486] [Section 11.8.3.2, BOD, ROIN: 2-43174]

Basis Discussion: The lubrication systems on hoist systems are accessible to personnel for ease of maintenance.

Verification: Verification is expected to be achieved through the following:

Verif. Method	Verif. By	Plan	Notes/Comments
I	ENG	Review crane/hoist design to verify incorporation for accessible lubrication systems.	

3.6 Melter Transfer Path Components

3.6.1 Mission and Functional / Performance Requirements (Including States/Modes)

3.6.1.1 Melter Transport Handling

Requirement: The WTP Contractor shall provide transport for new and spent or failed melters between the melter assembly pad and the melter gallery melter operating position. (A.1, A.2, A.3, A.4) (B.1, B.2, B.3)

Basis Discussion: The LAW winch assembly is designed to transport new and spent melters between the melter assembly pad and the melter gallery.

Verification: Verification is expected to be achieved through the following:

Verif. Method	Verif. By	Plan	Notes/Comments
I	ENG	Review of design to verify capability to transport new and spent or failed melters between melter assembly pad and melter gallery.	May be documented in an evaluation/assessment report.

3.6.1.2 Melter Pulling Capacity

Requirement: The LMH system shall have the capability to pull the spent or failed melter during the export of a melter between the melter gallery and the melter assembly pad. (B.2, B.3)

Basis Discussion: The LAW melter is expected to be heaviest when spent or failed and full of glass.

Verification: Verification is expected to be achieved through the following:

Verif. Method	Verif. By	Plan	Notes/Comments
A	ENG	Perform an analysis to determine the load of a failed melter full of glass.	
I	ENG	Review LMH design to verify capacity to pull the melter between the melter assembly pad and the melter gallery.	May be documented in an evaluation/assessment report.

3.6.1.3 LPH Equipment Transfer

Requirement: The LMH system shall provide the means for transfer of new and spent or failed LPH equipment between the melter assembly pad and the C1/C2 airlock. (C.1, C.2, C.3, C.4) (D.3, D.4)

Basis Discussion: None.

Verification: Verification is expected to be achieved through the following:

Verif. Method	Verif. By	Plan	Notes/Comments
I	ENG	Review LMH system design to verify ability to transfer new and spent or failed LPH equipment between the melter assembly pad and the C1/C2 airlock.	May be documented in an evaluation/assessment report.
D	SU/COM	Demonstrate LPH equipment transfer between the melter assembly pad and the C1/C2 airlock.	

3.6.2 Nuclear Safety, ALARA, Environmental and Other Regulatory Requirements

None.

3.6.3 System Interface Requirements

None.

3.6.4 Other Technical, Specialty, Operations and Maintenance Requirements

None.

3.7 Monitoring and Controls Requirements

3.7.1 Mission and Functional / Performance Requirements (Including States/Modes)

3.7.1.1 Local Mode

Requirement: LMH equipment shall be operated directly from a local panel, pendant, or MCC, and maintain independent protection interlocks. [Section 7.3.5.3, BOD, ROIN: 1-40658, ROIN: 1-40659] [Sections 11.10, 11.12.3.6, ORD, ROIN: 8-6071, ROIN: 8-6072, ROIN: 8-6073, ROIN: 1-40012]

Basis discussion: Local mode allows equipment to be operated for maintenance/diagnostic purposes. Independent protection interlocks remain in-force to prevent mis-operation of equipment.

Verification: Verification is expected to be achieved through the following:

Verif. Method	Verif. By	Plan	Notes/Comments
I	ENG	Review design to verify local mode features and functions are provided.	
D	SU/COM	Demonstrate the operability of local mode features and functions during operation from the local control panels or pendants.	

3.7.2 Nuclear Safety, ALARA, Environmental and Other Regulatory Requirements

None.

3.7.3 System Interface Requirements

None.

3.7.4 Other Technical, Specialty, Operations and Maintenance Requirements

3.7.4.1 Cranes and Hoists

3.7.4.1.1 Standardized Operator Controls

Requirement: Control units for the LMH system cranes and hoists shall be standardized with similar mechanical handling control units facility-wide. [Section 14.16, ORD, ROIN: 8-473]

Basis Discussion: Standardized operator controls are provided as much as possible to avoid errors that might occur when moving from one crane or hoist to another. Differences to accommodate specialized crane or hoist operations are acceptable.

Verification: Verification is expected to be achieved through the following:

Verif. Method	Verif. By	Plan	Notes/Comments
I	ENG	Review design and/or physical configuration to verify similar control units, including push-buttons on local control panels, pendants, and radio control units, are provided for similar cranes and hoists.	May be documented in a facility-wide assessment/report. Operations to participate in or review assessment.

3.7.4.2 Emergency Stop (E-Stop)

Requirement: Where operators will be co-located with operating equipment and physical injury is credible, dedicated emergency-stop (E-Stop) buttons shall be provided near the equipment. The location of such stops will depend on the equipment's physical and operational characteristics. [Section 11.12.5.3, ORD, ROIN: 1-40021] [Section 7.3.9.1, BOD, ROIN: 1-40683]

Basis discussion: Guidance for the application of E-stops for equipment at the WTP is provided in 24590-WTP-ES-J-11-001.

Verification: Verification is expected to be achieved through:

Verif. Method	Verif. By	Plan	Notes/Comments
A	ENG	Evaluate any potential credible events that may lead to operator injury for every piece of MH equipment located in normally accessible areas to determine which equipment requires E-stops.	May be documented in an evaluation/ assessment report. Operations to participate in or review assessment.
I	ENG	Review of design to verify incorporation of emergency stops on equipment deemed to have a credible injury hazard.	
D	SU/COM	Demonstrate the capability to stop equipment using the equipment's dedicated emergency stop.	

3.7.4.3 Emergency Stop Reporting and Reset

Requirement: When the E-stops are activated, the equipment shall remain in a shutdown state until the circuit is physically reset to prevent equipment restart while the dangerous condition exists. Each individual E-stop, however configured, shall report its status back to their respective control system. Equipment with MHJ connection shall report E-stop status both to the MHJ and to the local control system. Equipment with no MHJ connection shall only provide E-stop status to the local control system. [Section 11.12.5.3, ORD, ROIN: 8-8287] [Section 7.3.9.1, BOD, ROIN: 1-40684, ROIN: 40-23262]

Basis discussion: E-stops are normally implemented by Programmable Electronic System (PES) dedicated for that purpose. For systems with safety instrumented functions, E-stops may also be implemented in conjunction with related safety instrumented systems (for example, using an existing PPJ controller).

There are no safety instrumented functions associated with the LMH system

Verification: Verification is expected to be achieved through:

Verif. Method	Verif. By	Plan	Notes/Comments
I	ENG	Review design to verify E-stops provide the appropriate status reporting and remain in a shutdown state until the circuit is physically reset.	
D	SU/COM	Demonstrate E-stops status indication and reset functions.	

3.7.4.4 Accessibility for Calibration, Testing, and Inspection

Requirement: The LMH system design shall provide the capability to access and perform direct calibration, periodic functional testing, removal, replacement, and inspections of equipment and components during normal operation. [Sections 6.7, 8.1.2, 9.12, 12.6.3, BOD, ROIN: 1-40577, ROIN: 1-40729, ROIN: 1-41030, ROIN: 1-41328] [Section 9.1, ORD, ROIN: 8-4345, ROIN: 8-4346]

Basis Discussion: None.
[ALARA]

Verification: Verification is expected to be achieved through the following:

Verif. Method	Verif. By	Plan	Notes/Comments
I	ENG	Review design to verify that equipment configurations will facilitate replacement and removal, calibration, periodic functional testing, and inspections of equipment and components without impact to operations.	May be Documented in an evaluation/assessment. Operations or Plant Engineering may participate in or review the evaluation/assessment.

3.8 Relevant Codes and Standards

3.8.1 Codes of Record

Table 3-4 identifies relevant external codes and standards applicable to the LMH design. These are selected from those documents that comprise the Code of Record (COR) as established in 24590-WTP-RPT-ENG-01-001, Technical Baseline Description (i.e., the WTP Contract, BOD, and SRD). Use of these documents is typically invoked in the design process through the documents identified in Section 3.8.2. Beyond inclusion here, no attempt is made in this document to extract individual design requirements from these documents for allocation to SSCs.

In some cases, the expected means of verification may be established on the basis of tests or other criteria required by the codes and standards. This does not necessarily include verification or testing more appropriately defined in the procurement of individual sub-systems or components, or verification or testing that is a routine activity defined by specifications and/or procedures used by construction and startup.

Table 3-4 LMH Applicable Codes and Standards

Implementing Codes and Standards: [Contract No. DE-AC27-01RV14136, WTP Contract]
• Not applicable
Implementing Codes and Standards: [24590-WTP-DB-ENG-01-001, Rev 2, Basis Of Design]
• ASME B30.16, *Overhead Hoists (Underhung).*
• AWS D1.1/D1.1M, *Structural Welding Code - Steel.*
• AWS D1.6, *Structural Welding Code - Stainless Steel.*
• DOE-STD-1020-94 (Change 1 1996), *Natural Phenomena Hazards Design and Evaluation Criteria for Department of Energy Facilities.*
• NFPA 70-1999, *National Electrical Code.*
• UBC 1997, *Uniform Building Code.*
• WAC 173-303, *Dangerous Waste Regulation.*
Implementing Codes and Standards: [24590-WTP-SRD-ESH-01-001-02, Rev 7E, Section 4, SRD]
• ANSI/AISC N690-1994, *Specification for Safety-Related Steel Structures for Nuclear Facilities.*
• ASCE 4-98, *Seismic Analysis of Safety-Related Nuclear Structures.*
• ASCE 7-98, *Minimum Design Loads for Buildings and Other Structures.*
• DOE-STD-1020-94 (Change 1 1996), *Natural Phenomena Hazards Design and Evaluation Criteria for Department of Energy Facilities.*
• IEEE 338-1987, *Criteria for the Periodic Surveillance Testing of Nuclear Power Generating Station Safety Systems.*
• IEEE 379-1994, *Standard Application of the Single Failure Criterion to Nuclear Power Generating Stations.*
• IEEE 497-2002, *Criteria for Accident Monitoring Instrumentation for Nuclear Power Generating Stations.*
• IEEE 1023-1988, *Recommended Practice for the Application of Human Factors Engineering to Systems, Equipment, and Facilities of Nuclear Power Generating Stations and Other Nuclear Facilities.*
• NFPA 70-1999, *National Electrical Code.*
• NFPA 801-2003, *Standard for Fire Protection for Facilities Handling Radioactive Materials.*
• UBC 1997, *Uniform Building Code.*

3.8.2 WTP Design Criteria, Design Guides, and General Specifications

Table 3-5 identifies relevant discipline design criteria, guides, and general specifications applicable to the LAW LMH. Use of these documents to develop the detailed design of SSCs is governed by engineering procedures. The majority of requirements within these documents are derived from external codes and standards or are specified methods and approaches to achieve standardization and consistency of design. Beyond inclusion here, no attempt is made in this document to extract individual design requirements from these documents for tracing and verification, or to define how direction provided by these documents is applicable and allocated (or not) to individual SSCs.

Table 3-5 WTP Design Criteria, Guides, and General Specifications Applicable to LAW LMH

Document Number	Title
Design Criteria Documents	
24590-WTP-DC-M-06-001	*Mechanical Systems Design Criteria*
24590-WTP-DC-E-01-001	*Electrical Design Criteria*
24590-WTP-DC-ENG-06-001	*Design Criteria for Environmental and Natural Phenomena Hazard Qualification of Structures Systems and Components*
24590-WTP-DC-ST-04-001	*Seismic Analysis and Design Criteria*
Design Guides	
24590-WTP-GPG-ENG-086	Equipment Environmental Qualification
24590-WTP-GPG-ENG-0103	Equipment Seismic Qualification
24590-WTP-GPG-ENG-0109	Accessibility Review of Equipment and Components
24590-WTP-GPG-ENG-0127	Processing Engineering Calculations
24590-WTP-GPG-ENG-0141	WTP Radiation Damage Thresholds for Non-Metallic Materials
24590-WTP-GPG-ENG-0159	Single Failure Analysis Process for Mechanical, HVAC, and Control Systems
24590-WTP-GPG-J-005	Control Systems Interfaces
24590-WTP-GPG-J-014	Control Systems Design Process Guide
24590-WTP-GPG-J-017	WTP Seismic Category Application to C&I Systems
24590-WTP-GPG-M-036	Determining Quality Level and Seismic Category Classification of Sub-Components, Assemblies, Sub-Assemblies, and Parts
24590-WTP-GPG-M-052	Specifying Design Cycles for Equipment and Piping
24590-WTP-GPG-SRAD-001	Design Guide for ALARA
Specifications	
24590-WTP-3PS-FB01-T0001	Equipment Specification for Seismic Qualification of Seismic Category III & IV Equipment and Tanks
24590-WTP-3PS-G000-T0015	Engineering Specification for Environmental Qualification of Mechanical Equipment
24590-WTP-3PS-JQ00-T0004	Engineering Specification for Management of Supplier Software
24590-WTP-3PS-JQ07-T0001	Engineering Specification for Instrumentation for Package Systems
24590-WTP-3PS-JQ08-T0001	Engineering Specification for Construction and Installation of Controls and Instrumentation
24590-WTP-3PS-MJKH-T0001	Engineering Specification for Commercial Quality Monorail Hoists, Job Cranes, and Under Running Single Girder Cranes
24590-WTP-3PS-SS90-T0002	Engineering Specification for WTP Project Tailoring of ANSI/AISC N690 & IEEE 323, 344 & 382

4 System Description

This section summarizes design output information, describing the current design and the operational and maintenance aspects of the system. The information provided below does not contain design requirements and should not be used as design input. The description of the current design contained in this section may not fully align with design requirements. This is acceptable within the context of this document. Areas of misalignment are to be resolved through appropriate mechanisms and the SDD updated to reflect changes made to the design. Changes to the descriptive text will be made following the changes to the lower tiered Engineering documents.

4.1 Configuration Information

The LMH system is part of the LAW Facility, and is located on the south face of the facility. In order of north to south, the physical boundaries of the LMH system are the LSM melter gallery (room L-0112), the C1/C2 airlock (room L-0113), and the melter assembly pad (LEP004) at the +3 ft elevation (Figure 2-2). The equipment contained within the listed rooms is designed to implement operational and ALARA requirements. The LMH System equipment supports the primary function of safely installing and removing the LAW melters to and from the melter gallery. The LAW melters, used in the glass-vitrification process, weigh approximately 698,500 lbs. when full of glass, and, when installed, have envelope dimensions of 262 inches (length) x 367 inches (width) x 190 inches (height). In addition LMH system equipment provides lifting capabilities to support operations.

The LMH system provides equipment and structures to facilitate LAW melter import and export. The melters are placed on a purpose built melter rail system that extends from the building exterior into the melter gallery. The melter rail system includes components to locate and anchor the LAW melter at the facility operating position. The motive force to move the melter is a winch and pulley block arrangement.

The LMH system provides a monorail hoist in the C1/C2 airlock area to support plant maintenance operations. The monorail hoist removes floor hatches (Room L-0113) and transfers equipment and supplies to the LPH monorail hoist maintenance area on the -21 ft elevation.

Refer to drawings 24590-LAW-P1-P23T-00018, 00023, 00024, 00034, and 00035, *LAW Vitrification Building Equipment Location Plan* for room locations

4.1.1 Description of System, Subsystems, and Major Components

4.1.1.1 Description of Mechanical Handling Equipment

The LMH system mechanical handling equipment is designed to meet operational and ALARA requirements, with a nominal plant life of 40 years to minimize worker exposure by reducing maintenance and replacement activities. Where commercially available components do not have a design life of 40 years, the equipment is designed to facilitate maintenance. [3.4.1.1]

The equipment supporting the LMH system is specified as the standard commercial offering. Where the application demands enhanced commercial products and/or custom designs are implemented and standardized with other WTP facilities to promote ease of maintenance and operator familiarity. The design of the equipment has been simplified to improve reliability and maintainability where practical. Materials and coatings have been selected to withstand the radiological environment, and withstand decontamination. [3.4.2.2.1, 3.4.4.1]

4.1.1.1.1 LAW Melter Rails

Plant Item Number: 24590-LAW-MH-LMH-RAIL-00001

24590-LAW-MH-LMH-RAIL-00002
24590-LAW-MH-LMH-RAIL-00003
24590-LAW-MH-LMH-RAIL-00004

Refer to: 24590-QL-POA-MQR0-00001-02-00009, *Drawing – LAW Vitrification System LMH Rails General Assembly Melter Bay 1*

Refer to: 24590-QL-POA-MQR0-00001-02-00010, *Drawing – LAW Vitrification System LMH Rail General Assembly Melter Bay 2*

Refer to: 24590-QL-POA-MQR0-00001-02-00001, *Drawing – 0942367000-00110HS LAW Vitrification System LMH LSM Sub Assembly 1 (East Line) Assembly & Machining*

Refer to: 24590-QL-POA-MQR0-00001-02-00002, *Drawing – 0942367000-00210HS LAW Vitrification System LMH LSM Sub Assembly 2 (East Line) Assembly & Machining*

Refer to: 24590-QL-POA-MQR0-00001-02-00003, *Drawing – 0942367000-00310HS LAW Vitrification System LMH LSM Sub Assembly 3 (East Line) Assembly & Machining*

Refer to: 24590-QL-POA-MQR0-00001-02-00004, *Drawing – 0942367000-00410HS LAW Vitrification System LMH LSM Sub Assembly 4 (East Line) Assembly & Machining*

Refer to: 24590-QL-POA-MQR0-00001-02-00005, *Drawing – 0942367000-00510HS LAW Vitrification System LMH LSM Sub Assembly 1 (West Line) Assembly & Machining*

Refer to: 24590-QL-POA-MQR0-00001-02-00006, *Drawing – 0942367000-00610HS LAW Vitrification System LMH LSM Sub Assembly 2 (West Line) Assembly & Machining*

Refer to: 24590-QL-POA-MQR0-00001-02-00007, *Drawing – 0942367000-00710HS LAW Vitrification System LMH LSM Sub Assembly 3 (West Line) Assembly & Machining*

Refer to: 24590-QL-POA-MQR0-00001-02-00008, *Drawing – 0942367000-00810HS LAW Vitrification System LMH LSM Sub Assembly 4 (West Line) Assembly & Machining*

Refer to: 24590-LAW-DB-S13T-00158, *LAW Vitrification Building Main Building Melter Rail Anchorage Enlarge Plan*

The LAW melter rails extend from the melter assembly pad to the LSM melter gallery. At the melter assembly pad, the melter is placed directly on the LAW melter rails, mating the wheels on the bottom of the melter with the LAW melter rails. The rails at the melter assembly pad provide a LAW melter assembly location and the necessary guidance to transfer the LAW melter into the facility. At the C1/C2 airlock, the rail assemblies provide guidance to transfer the LSM into the facility. The LAW melter rail segments on the LSM melter gallery provide guidance to transfer the LSM into the facility, a mounting surface for the melter over travel restraints, and seismic restraint for the LSM in the operating position.

All rail segments on the melter assembly pad do not provide any safety functions. The final two rail segments, supporting the LSM in the operating position, are designated as Safety Class SS and Seismic Category SC-III. The passive safety function is seismic restraint (NPH) of the LSM while operating. [3.4.1.3, 3.4.2.1]

The LAW melter rails are secured to the melter assembly pad, the C1/C2 airlock, and the melter gallery at the +3 ft elevation. The installed top of rail elevation is 3 ft 11-1/8 in.

Figure 4-1 Rail System

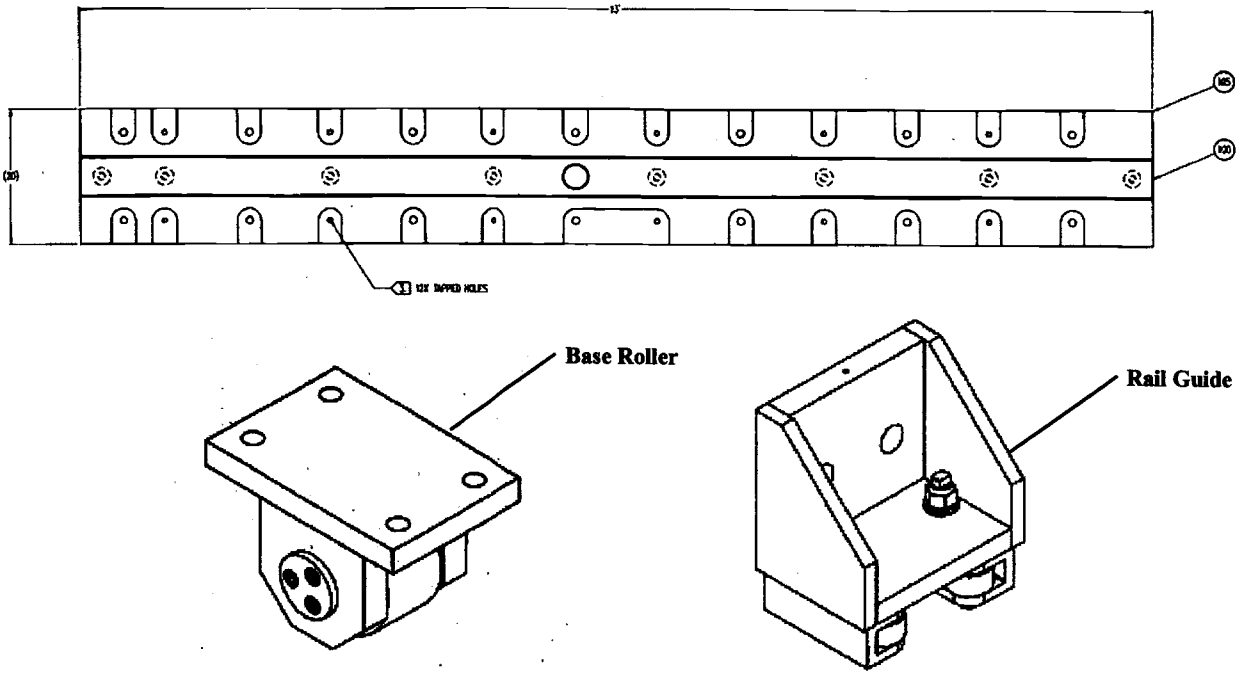

4.1.1.1.2 Seismic Anchor Pin

Refer to: 24590-101-TSA-W000-0010-409-453, *Final – 100% Design – LAW, Seismic Pin Support Frame*

Refer to: 24590-QL-POA-MQR0-00001-02-00015, *Drawing – 0942367000-00050HS LAW Vitrification System LMH Seismic Anchor Pin*

The seismic anchor pins provide seismic restraint (North/South direction) for the LSM in the operating position. The cube portion of the seismic anchor pin interfaces with the LSM seismic pin support frame provided on the LSM. The cylindrical portion of the seismic anchor pin engages the LAW melter rails.

The seismic anchor pins provide a seismic safety function of the LSM in the operating position and are designated as Safety Class SS and Seismic Category SC-III. The passive safety function of the seismic anchor pins is seismic restraint of the LSM while operating. [3.4.1.3, 3.4.2.1]

Figure 4-2 Seismic Anchor Pin

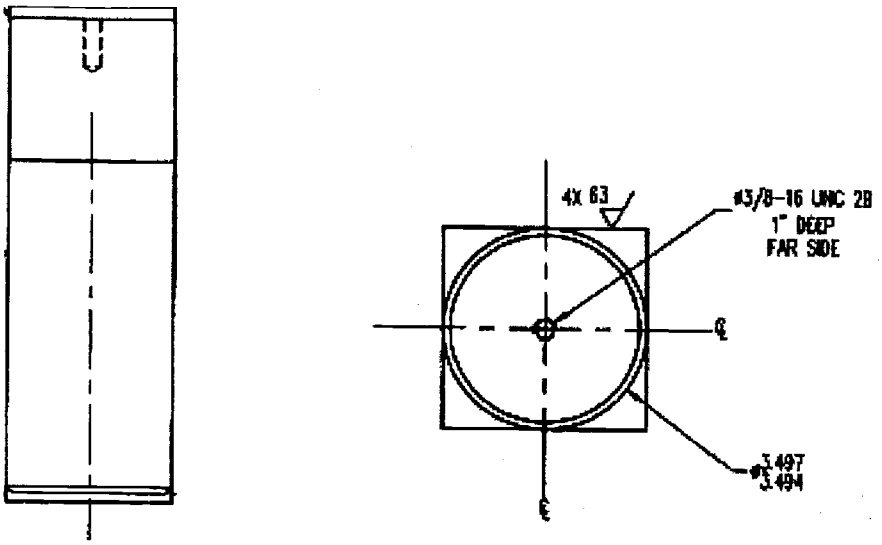

4.1.1.1.3 LAW Winch Assembly

Plant Item Number: 24590-LAW-MH-LMH-MHAN-00079

Refer to: 24590-CM-POA-MQTS-00003-04-00001, *Drawing- Project 228 LAW: LMH – LAW Winch General Arrangement*

Refer to: 24590-CM-POA-MQTS-00003-04-00091, *Drawing – Project 228 LAW:LMH – LAW Winch*

Refer to: 24590-CM-POA-MQTS-00003-01-00004, *Manual – Operations Manual for the LAW Melter Import Winches/Pulleys L/DS CM*

Refer to: 24590-LAW-P1-P23T-00023, *LAW Vitrification Building Equipment Location Plan EL 3'-0"/Area 16*

Refer to: 24590-LAW-P1-P23T-00024, *LAW Vitrification Building Equipment Location Plan EL 3'-0"/Area 17*

Refer to: 24590-LAW-DB-S13T-00615, *LAW Vitrification Facility Melter Assembly Pad Conc Forming Plan @ Elevation (+)3'-0"*

The LAW winch assembly provides the motive force for transferring the LSM along fixed melter rails. The winch assembly operates in conjunction with removable pulley blocks and pulley blocks (permanently installed) to import and export LAW melters form the melter assembly pad to the melter gallery. The winch assembly is only installed for LSM transfer operations and then is removed and stored. The winch is supplied power at the melter assembly pad. [3.6.1.1, 3.6.1.2]

The winch assembly does not provide a safety function.

The winch assembly is a dual drum system with a maximum dual line pull of 43,000 lbs. The winch assembly has three operator selectable line speeds (6 ipm, 60 ipm, 75 fpm). [3.6.1.2]

- The 6 inches per minute (ipm) line speed is for final locating of the LSM with respect to the LSM operating position (seismic anchor pin location) in the LSM melter gallery.

- The 60 ipm line speed is to grossly locate the LSM during the transition from the melter assembly pad to the melter gallery.
- The 75 feet per minute (fpm) line speed is torque limited to prohibit movement of an LSM, and is used for unwinding or winding the wire rope from the winch drums only.

The winch assembly is mounted to one of four embed locations (two per melter) on the melter assembly pad. The embed locations furthest from the building are used to transfer the LAW melter from the assembly position to the exterior door of the facility. The embed locations closest to the building are used to continue transfer of the LAW melter from the building exterior to the operating position. The winch is located on the embeds by guide pins and secured using multiple threaded fasteners. The winch assembly is guarded by an enclosure which is interlocked with the drive mechanism in order to protect the operator and other employees in the area from hazards such as those created by point of operation, ingoing nip points, rotating parts, flying chips, and sparks (OSHA 1910).

The winch wire rope is routed through pulley blocks mounted to facility embeds, the winch frame, and the LSM base, depending on the relocation activities. For wire rope reeving configurations refer to the *Operations Manual for the LAW Melter Import Winches/Pulleys L/DS CM.*

Figure 4-3 Winch Assembly

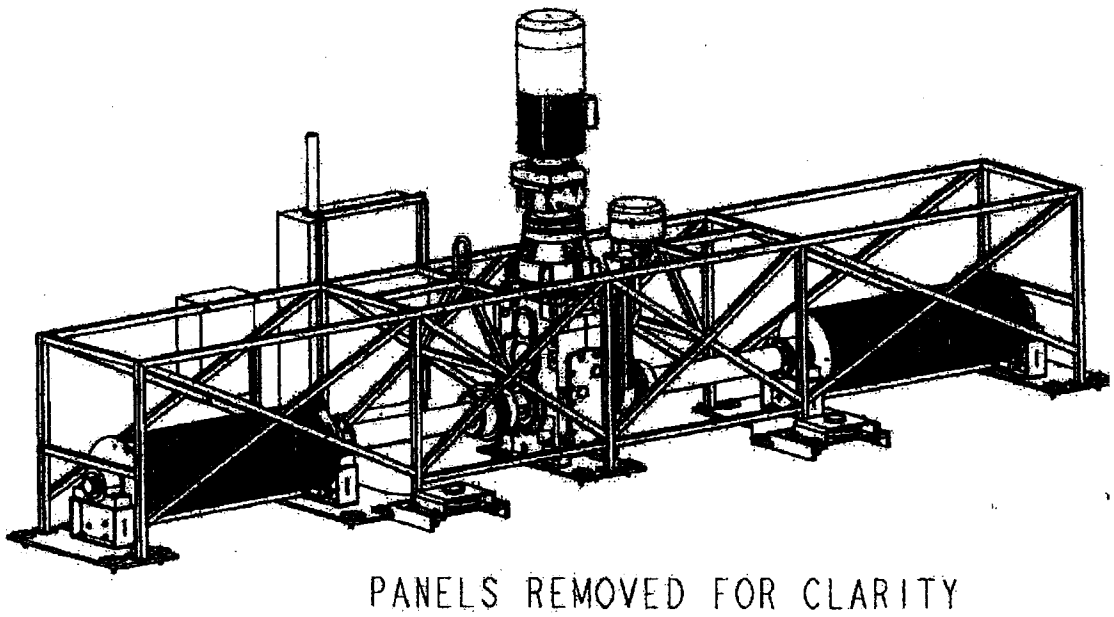

4.1.1.1.4 Removable Pulley Blocks

Plant Item Number: 24590-LAW-MH-LMH-MHAN-00081
24590-LAW-MH-LMH-MHAN-00082

Refer to: 24590-CM-POA-MQTS-00003-04-00013, *Drawing – Project 228 LAW: LMH – Removable Pulley Block SE*

Refer to: 24590-CM-POA-MQTS-00003-04-00071, *Drawing – Project 228 LAW: LMH – Removable Pulley Block SW*

The removable pulley block assemblies are temporarily installed during LSM positioning on the melter assembly pad. The removable pulley blocks are secured to embed plates at the exterior door threshold in the C1/C2 airlock. The LAW winch assembly, when used in conjunction with the removable pulley blocks, is mounted on the embeds furthest from the LAW facility. The removable pulley blocks are guarded by an enclosure in order to protect the operator and other employees in the area from hazards such as those created by point of operation, ingoing nip points, rotating parts, flying chips, and sparks (OSHA 1910).

The removable pulley blocks do not provide a safety functions.

Figure 4-4 Removable Pulley Blocks

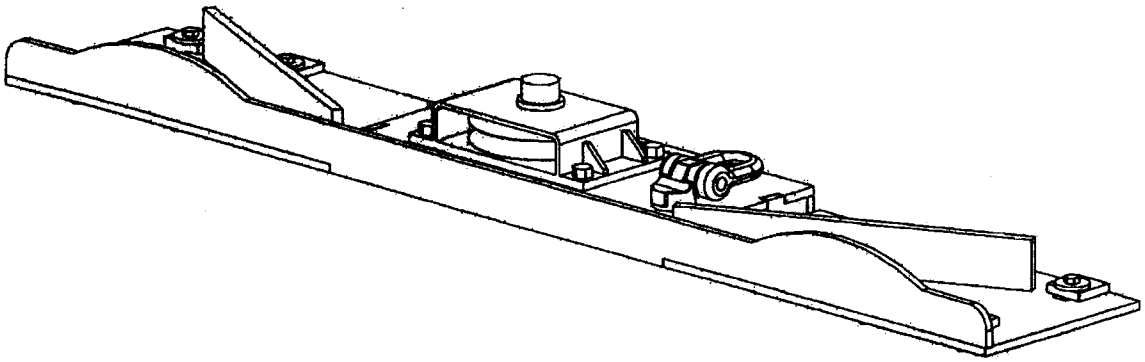

4.1.1.1.5 Pulley Blocks

Plant Item Number: 24590-LAW-MH-LMH-MHAN-00083
24590-LAW-MH-LMH-MHAN-00084
24590-LAW-MH-LMH-MHAN-00085
24590-LAW-MH-LMH-MHAN-00086

Refer to: 24590-CM-POA-MQTS-00003-04-00011, *Drawing – Project 228 LAW:LMH – Import Pulley Block NE*

Refer to: 24590-CM-POA-MQTS-00003-04-00012, *Drawing – Project 228 LAW:LMH – Pulley Weldment NE*

Refer to: 24590-CM-POA-MQTS-00003-04-00088, *Drawing – Project 228 LAW:LMH – Pulley Weldment NW*

Refer to: 24590-CM-POA-MQTS-00003-04-00089, *Drawing – Project 228 LAW:LMH – Import Pulley Block NW*

The pulley block assemblies work in conjunction with the LAW winch assembly to locate the LSM within the melter gallery. The pulley blocks are secured to embeds on the +3'-0" elevation, north of the LSM operating position. The LAW winch assembly is mounted on the embeds closest to the LAW facility when used in conjunction with these pulley blocks. The pulley blocks are guarded by an enclosure in order to protect the operator and other employees in the area from hazards such as those created by point of operation, ingoing nip points, rotating parts, flying chips, and sparks (OSHA 1910).

The pulley blocks do not provide a safety function.

Figure 4-5 Pulley Blocks

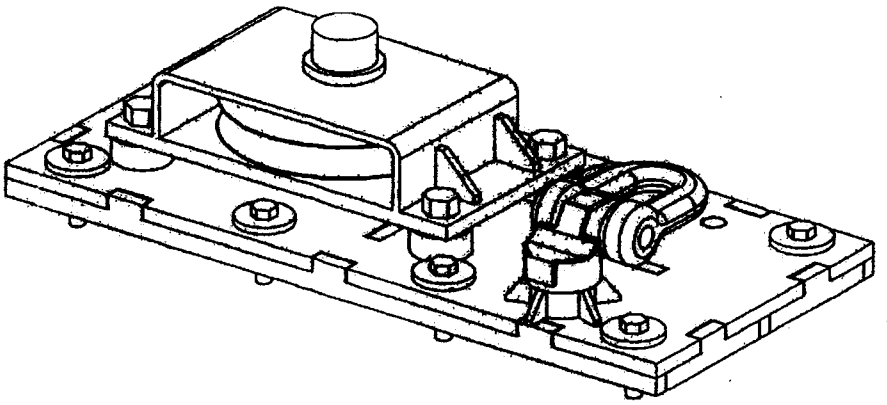

4.1.1.1.6 Melter Over-Travel Restraints

Plant Item Number: 24590-LAW-MH-LMH-MHAN-00074
24590-LAW-MH-LMH-MHAN-00075
24590-LAW-MH-LMH-MHAN-00076
24590-LAW-MH-LMH-MHAN-00077

Refer to: 24590-CM-POA-MQTS-00003-04-00015, *Drawing – Project 228 LAW:LMH – Over-Travel Restraint*

The melter over-travel restraints are physical stops that prohibit the LSM from impacting facility structures, as a result of the LSM being positioned beyond the normal operating position. The over-travel restraints are mounted to the facility rails and secured with concrete anchors.

The melter over-travel restraints do not provide a safety function.

Figure 4-6 Over-Travel Restraints

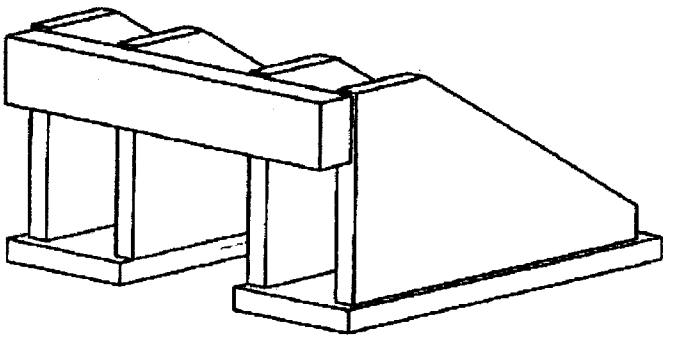

4.1.1.1.7 Side Pull Hoist Ring

Refer to: 24590-CM-POA-MQTS-00003-01-00002, *Manual – Installation Manual for the LAW Melter Import Winches/Pulleys L/DS CM*

Refer to: 24590-CM-POA-MQTS-00003-01-00004, *Manual, - Operations Manual for the LAW Melter Import Winches/Pulleys L/DS CM*

The side pull hoist ring are installed to the melter (threaded holes underneath the melter near the melter pulley blocks) to allow attachment of wire rope to the melter for removal purposes.

The side pull hoist ring does not provide a safety function.

4.1.1.1.8 C1/C2 Airlock Monorail

Plant Item Number: 24590-LAW-MJ-LMH-HST-00001

Refer to: 24590-CM-POA-MJKH-00002-01-00026, *Drawing – 10 Ton Monorail Electric Wire Rope Hoist General Arrangement*

Refer to: 24590-CM-POA-MJKH-00002-10-00003, *Manual – Operating, Parts & Maintenance Manual - 10 Ton Monorail Electric Wire Rope Hoist*

Refer to: 24590-LAW-S1-S15T-00809, *LAW Vitrification Building Main Building South Floor Hatch Cover Plates Plan, Sections and Details*

Refer to: 24590-LAW-SS-S15T-00131, *LAW Vitrification Building Main Building Structural Steel Monorail Plans, Sections and Details*

The C1/C2 airlock monorail is located in the C1/C2 airlock, travels from column 4.3 to 12.5, and has a design capacity of 10 tons. The monorail is an electric wire rope hoist with a service class defined by American Society of Mechanical Engineers as ASME B30.16. The monorail is controlled from the +3 ft elevation manually using a digital radio controller supplied with the equipment. The hoist brakes activate upon loss/ removal of power. [3.5.1.1, 3.5.4.1]

The function of the C1/C2 airlock monorail is to support maintenance activities through a transfer of equipment to/from the LPH system. The monorail hoist interfaces with removable floor hatch covers to gain access to the -21'-0" elevation monorail hoist maintenance areas (Rooms L-B023A, L-B023B, and L-B022A) to support the LPH system by transferring equipment between the +3ft to -21ft elevations. The transfer of LPH equipment from the +3ft to -21ft elevations will not occur simultaneously with a new or spent melter import or export. The balance of the maintenance activities are limited only by physical location and monorail capacity. [3.4.3, 3.5.1.2]

The C1/C2 airlock monorail does not provide a safety function.

Figure 4-7 C1/C2 Airlock Monorail

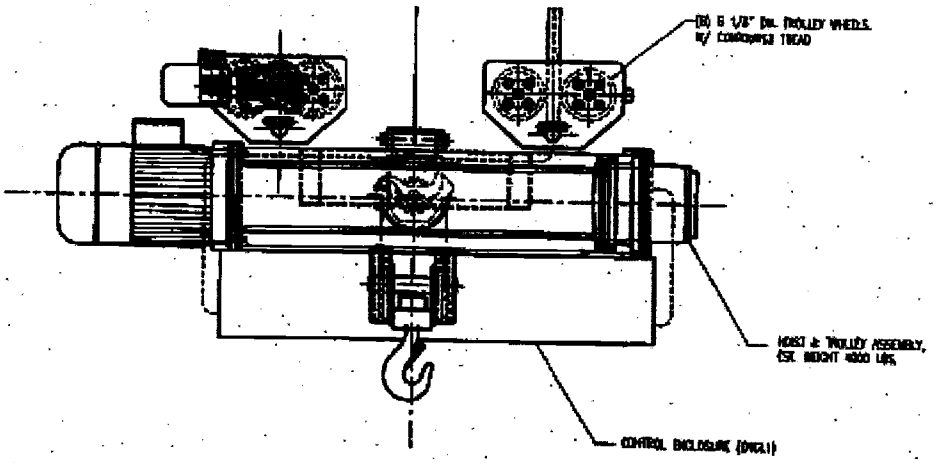

4.1.1.2 Description of Architectural Roll-Up Doors and Threshold

Note: The following is for information only. The architectural roll-up doors and thresholds are not part of the LMH system.

Movement of the LAW melter from the melter assembly pad to the LSM melter gallery requires the melter to move through two doors. The LAW melter 1 (LMP-MLTR-00001) located in west bay 1 (center line with column 5) moves through architectural roll-up doors L-0113-4 and L-0112-3. The LAW melter 2 (LMP-MLTR-00002) located in east bay 2 (center line with column 8) moves through architectural roll-up doors L-0113-3 and L-0112-2. The architectural roll-up doors are described in the following sections.

4.1.1.2.1 C1/C2 Entry Doors

Plant Item Number (Door No.): L-0113-3, C1/C2 Entry Door (East Bay 2)
L-0113-4, C1/C2 Entry Door (West Bay 1)

Refer to: 24590-LAW-AD-A18T-05101001, *LAW Vitrification Building Architectural Door Schedule EL 0'-0" & 3'-0"*

Refer to: 24590-LAW-A1-A10T-01201003, *LAW Vitrification Building Architectural Floor Plan EL 3'-0" Zone 3*

The C1/C2 entry doors (L-0113-3 and L-0113-4) separate the MAp and the C1/C2 airlock. These architectural roll-up doors are located on the exterior of the south wall of the LAW facility between the melter assembly pad and the C1/C2 airlock on column L and between column line 4.3 and 6 for Bay 1 and column lines 7 and 9 for Bay 2. The doors are each powered by one motor and have two position switches, which identify door position (open/closed). The C1/C2 entry doors are administratively controlled.

The C1/C2 entry doors do not provide a safety function.

4.1.1.2.2 C1/C2 Transition Door Threshold

Refer to: 24590-LAW-S1-S15T-00120, *LAW Vitrification Building Main Building Melter Overhead Doors Raised Thresholds Plan and Sections*

Refer to: 24590-LAW-S1-S15T-00121, *LAW Vitrification Building Main Building Melter Overhead Doors Raised Thresholds Sections and Details*

The C1/C2 transition door thresholds interface with the C1/C2 entry doors to provide ventilation from areas of lower contamination to higher contamination potential, from the melter assembly pad to the C1/C2 airlock. It attaches to the bottom edge of the C1/C2 entry door to assists in the control of ventilation while providing passage for the Melter Winch Assembly cables. The transition door thresholds are located on column L, between column lines 4.3 and 6 for Bay 1 and column lines 7 and 9 for Bay 2.

The C1/C2 transition door threshold does not provide a safety function.

4.1.1.2.3 C2/C3 Airlock Doors

Plant Item Number (Door No): L-0112-2, C2/C3 Airlock Door (East Bay 2)
L-0112-3, C2/C3 Airlock Door (West Bay 1)

Refer to: 24590-LAW-AD-A18T-05101001, *LAW Vitrification Building Architectural Door Schedule EL 0'-0" & 3'-0"*

Refer to: 24590-LAW-A1-A10T-01201003, *LAW Vitrification Building Architectural Floor Plan EL 3'-0" Zone 3*

The C2/C3 airlock doors (L-0112-2 and L-0112-3) separate the C1/C2 airlock and the LSM melter gallery. These architectural roll-up doors are located on column J between column lines 4.3 and 6 for Bay 1 and column lines 7 and 9 for Bay 2. The doors are each powered by one motor and have two position switches, which identify door position (open/closed). The C2/C3 airlock doors are administratively controlled.

The C2/C3 airlock doors do not provide a safety function.

4.1.1.2.4 C2/C3 Transition Doors Threshold

Refer to: 24590-LAW-S1-S15T-00120, *LAW Vitrification Building Main Building Melter Overhead Doors Raised Thresholds Plan and Sections*

Refer to: 24590-LAW-S1-S15T-00121, *LAW Vitrification Building Main Building Melter Overhead Doors Raised Thresholds Sections and Details*

The C2/C3 transition door thresholds interface with the C2/C3 airlock doors to provide ventilation from areas of lower contamination to higher contamination potential, from the C1/C2 airlock to the LSM melter gallery. It attaches to the bottom edge of the C2/C3 airlock door to assist in the control of ventilation while providing passage for the melter winch assembly cables. The transition door thresholds for the C2/C3 airlock doors are located on column J, between column lines 4.3 and 6 for Bay 1 and column lines 7 and 9 for Bay 2.

The C2/C3 transition door threshold does not provide a safety function.

4.1.2 Boundaries and Interfaces

4.1.2.1 System LMP – LAW Melter Process System

The LMP system provides design features (roller assembly, rail guide assembly, base seismic assembly, seismic support frame, and pulley assembly) to allow the LSM to interface with the winch and rail assemblies for import/export activities. [3.4.3]

Refer to: 24590-101-TSA-W000-0010-409-428, *Drawing – LAW Melter Rail Guide Assembly*

Refer to: 24590-101-TSA-W000-0010-409-430, *95% Design – LAW, Base Roller Assembly*

Refer to: 24590-101-TSA-W000-0010-409-450, *95% Design – LAW, Base Seismic Clamp Assembly*

Refer to: 24590-101-TSA-W000-0010-409-453, *Final – 100% Design – LAW, Seismic Pin Support Frame*

Refer to: 24590-101-TSA-W000-0010-409-456, *95% Design – LAW, Pulley Assembly*

Refer to: 24590-WTP-VDCN-ML-05-00573, *WTP-M-11701, Sheet 2: Add Holes for Current Spent Melter Winch Configuration*

4.1.2.2 System LPH – LAW Container Pour Handling System

The LMH system provides a monorail hoist that transfers equipment between the LMH system (3 ft Elevation) and the LPH system monorail maintenance areas (-21 ft). [3.4.3]

4.1.2.3 System LVE – Low Voltage Power

The LVE system provides power to LMH system equipment and components, such as the C1/C2 airlock monorail and the architectural roll-up doors. [3.4.3]

4.1.2.4 Melter Assembly

The LSM is delivered as subcomponents and constructed on the LMH system rail assemblies. The LMH system does not provide equipment to assemble the LSM. Melter assembling activities are outside the scope of the LMH system.

4.1.3 Physical Layout and Location

4.1.3.1 Melter Assembly Pad

The melter assembly pad (LEP004) is located external to the LAW Facility at an elevation of +3 ft elevation. North to the assembly pad are the exterior wall of the LAW Facility and two architectural roll-up doors (C1/C2 entry doors) where the melters travel through. The East side of the pad is configured as a loading dock to permit transfer of a spent LAW melter to the TOC supplied melter transport system.

The melter assembly pad provides an area for mating the LSM to melter rails and anchoring for equipment required to transport the LSM. The pad incorporates LAW melter rails that sit on embedded plates and provides multiple embedded plates that locate the winch assembly to support melter transfers. The rails traverse north-south and support the melter. The winch assembly is installed at two different locations on the melter assembly pad to support LSM import/export operations. Refer to Figure 2-3 for the winch assembly operating locations.

The melter assembly pad is designated as an R1/C1 area and is external to the LAW facility.

4.1.3.2 LSM Staging Area

The LSM staging area (also referred to as the C1/C2 airlock, room L-0113) is located on the South end of the LAW facility at the +3 ft elevation. The LSM staging area provides a contamination zone transition area, encompasses melter rail segments for melter transfer, and supports equipment transfers to the -21 ft elevation via C1/C2 airlock monorail. The airlock is separated from the melter assembly pad and the lower melter gallery by architectural roll up doors L-0113-4 (melter bay 1) and L-0113-3 (melter bay 2). Architectural door L-0112-3

(melter bay 1) and L-0112-2 (melter bay 2) separate the airlock from the melter gallery. For melter import/export activities, the architectural door in conjunction with the transition door thresholds support ventilation control from areas of lower to higher contamination potential.

Inside the airlock, there are embed plates that locate the removable pulley blocks during melter import activities from the melter assembly pad assembly location to a location close to the C1/C2 airlock doors (position 2I in Figure 2-3).

The airlock monorail hoist, inside the C1/C2 airlock, interfaces with removable floor hatches for access to the LPH system monorail maintenance areas. Refer to drawing 24590-LAW-S1-S15T-00809 for removable cover plate details.

The LSM staging area is designated as a R3/R2/C2 area.

4.1.3.3 LSM Melter Gallery

The LSM melter gallery (Room L-0112) is located in the center of the LAW facility at the +3 ft elevation. The LSM melter gallery provides operating space for the LSM and support equipment/services, anchoring for LSM transfer equipment, and seismic anchor capabilities for the LSM when operating. The pulley blocks (permanently installed) and the melter over travel restraints are located north of the melter operating position.

The Melter Gallery is designated a R3/C3/C2 area.

4.1.4 Principles of Operation

The LMH system consists of all the equipment associated with the import of new LSMs and export of failed or spent LSMs. The LMH system operations are conducted in a manner that meets ALARA and Radioactive Air Permit requirements. Prior to deployment of system LMH equipment, the areas and equipment are surveyed and decontaminated as required. During export operations, this includes disconnect of LSM services and preparations for facility release.

The following paragraph(s) provide a general description of equipment setup for transfers of the LAW LSM between the melter assembly pad and the melter gallery. Prior to importing the LAW LSM, melter import equipment and the immediate area along the melter path, from the melter assembly pad to the melter gallery, are released to allowable contamination levels. Prior to exporting the LAW LSM from the melter gallery, the LAW melter and the immediate area around the melter are released to C2 contamination levels. If the bottom of the melter is contaminated, the removable floor hatches between the airlock (L-0113) and the monorail hoist maintenance rooms (L-B023A or L-B023B) may be removed to assist in decontamination activities. The melter export equipment is monitored and decontaminated to allowable contamination levels. Refer to Figure 2-3 for melter positions.

The LSM is imported from the melter assembly pad (Position 1I) to a location close to the LAW facility C1/C2 entry door (Position 2I) using the LAW winch assembly and the removable pulley blocks. The winch is secured to the embeds furthest from the LAW facility on the melter assembly pad. The removable pulley blocks are secured to the embeds in the C1/C2 airlock. To continue import of the LSM from the melter assembly pad (Position 2I) to the C1/C2 airlock requires the installation of the winch assembly and the C2/C3 raised threshold. The winch is secured to the embeds nearest to the LAW facility on the melter assembly pad. The C2/ C3 raised threshold is installed at the C2/C3 airlock door location (L-0113/ L-0112 transition) and the C2/C3 door closed. The C1/C2 airlock door is opened. The removable pulley blocks are not required for this operation. The pulley blocks permanently mounted on the north wall of the melter bay are utilized for this and all subsequent import operations. If the LSM is being installed to the operating position (Position 4I), after the new LSM is located in the C1/C2 airlock, the C1/C2 threshold is installed at the C1/C2 airlock door location (L-0113/ LEP004 transition)

and the C1/C2 airlock door is closed. The C2/C3 door is opened and the C2/C3 raised threshold is removed. After the LSM is located in its operating location, the winch assembly and C1/C2 threshold are removed. The C1/C2 and C2/C3 airlock doors are closed.

The rest of this section provides a general description of equipment setup to export the LAW LSM from the melter gallery to the melter assembly pad. The removable pulley blocks are not installed for melter export operations. Refer to Figure 2-3 for melter positions.

The spent/failed LSM is exported from the operating position (Position 1E) to a location by the C2/C3 airlock doors using the winch assembly, C2/C3 raised threshold, and the C1/ C2 raised threshold. The winch is secured to the embeds nearest to the LAW facility on the melter assembly pad. The raised thresholds are installed at the C1/C2 airlock door and at C2/C3 airlock door locations and the doors closed. Before exporting the LSM to a location inside the C1/C2 airlock (Position 2E), the C2/C3 airlock door is raised and the raised threshold is removed/stored. After the LSM is located inside the C1/C2 airlock, the C2/C3 airlock door is closed. To continue export of the LSM from the C1/C2 airlock (Position 2E) to the export position in the melter assembly pad (Position 3E) requires installation of the winch assembly. The winch is secured to the embeds furthest from the LAW facility on the melter assembly pad. The C1/C2 airlock door is raised and the raised threshold is removed/ stored. After the LSM is located at position 3E, the winch assembly is removed /stored and the C1/C2 airlock door is closed.

Section 4.2 provides details of the LMH system equipment operations in its different configurations.

4.1.5 System Reliability Features

RESERVED

4.1.6 System Control Features

The LMH System contains no equipment with permissive or interlocks and does not interface with the Integrated Control Network (ICN). All LMH system equipment is controlled via direct operator control.

4.2 Operations

RESERVED

4.2.1 Initial Configuration (Pre-startup)

RESERVED

4.2.2 System Startup

RESERVED

4.2.3 Normal Operations

RESERVED

4.2.4 Off-Normal Operations

RESERVED

4.2.5 System Shutdown

RESERVED

4.2.6 Safety Management Programs and Administrative Controls

RESERVED

4.3 Testing and Maintenance

RESERVED

4.3.1 Temporary Configurations

RESERVED

4.3.2 TSR-Required Surveillances

RESERVED

4.3.3 Non-TSR Inspections and Testing

RESERVED

4.3.4 Maintenance

RESERVED

4.4 Supplemental Information

RESERVED

5 References and Design Documents List

5.1 Source / Basis References

Document Number	Rev	Title	Text Reference
24590-WTP-DB-ENG-01-001	2	Basis of Design	BOD
24590-WTP-RPT-OP-01-001	005	Operations Requirements Document	ORD
24590-WTP-PSAR-ESH-01-002-03	5I	Preliminary Documented Safety Analysis to Support Construction Authorization; LAW Facility Specific Information	PDSA - LAW Facility
24590-WTP-PSAR-ESH-01-002-01	5D	Preliminary Documented Safety Analysis to Support Construction Authorization; General Information	PDSA- General
24590-WTP-SRD-ESH-01-001-02	7E	Safety Requirements Document, Volume II	SRD
24590-WTP-ICD-MG-01-003	005	ICD 03 - Interface Control Document for Radioactive Solid Waste	ICD-03

5.2 Other References

Document Number	Rev	Title
24590-WTP-GPG-ENG-0161	000	Technical Requirements Management
24590-LAW-U0D-W16T-00001	002	LAW Room Environment Data Sheet
24590-WTP-3PS-JQ00-T0004	001	Management of Supplier Software
24590-WTP-GPG-ENG-033	002	Evaluation for Seismic Interaction Effects
Engineering Specifications		
24590-WTP-3PS-MJKH-T0001	005	Engineering Specification for Commercial Quality Monorail Hoists, Job Cranes, and Under Running Single Girder Cranes
General Arrangement /Equipment Location Drawings		
24590-LAW-P1-P23T-00018	005	LAW Vitrification Building Equipment Location Plan at EL 3'-0" Area 11
24590-LAW-P1-P23T-00023	004	LAW Vitrification Building Equipment Location Plan at EL 3'-0" Area 16
24590-LAW-P1-P23T-00024	004	LAW Vitrification Building Equipment Location Plan at EL 3'-0" Area 17
24590-LAW-A1-A10T-01201003	008	LAW Vitrification Building Architectural Floor Plan at EL 3'-0" Zone 3

24590-LAW-DB-S13T-00158	003	LAW Vitrification Building Main Building Melter Rail Anchorage Enlarge Plan
24590-LAW-DB-S13T-00615	004	LAW Vitrification Facility Melter Assembly Pad Conc Forming Plan @ Elevation (+)3'-0"
24590-LAW-S1-S15T-00809	000	LAW Vitrification Building Main Building South Floor Hatch Cover Plates Plan, Sections and Details
24590-LAW-SS-S15T-00131	001	LAW Vitrification Building Main Building Structural Steel Monorail Plans, Sections and Details
24590-LAW-S1-S15T-00120	002	LAW Vitrification Building Main Building Melter Overhead Doors Raised Thresholds Plan and Sections
24590-LAW-S1-S15T-00121	001	LAW Vitrification Building Main Building Melter Overhead Doors Raised Thresholds Sections and Details
LMH Equipment Vendor Documents		
24590-QL-POA-MQR0-00001-02-00009	00A	Drawing – LAW Vitrification System LMH Rails General Assembly Melter Bay 1
24590-QL-POA-MQR0-00001-02-00010	00A	Drawing – LAW Vitrification System LMH Rail General Assembly Melter Bay 2
24590-QL-POA-MQR0-00001-02-00001	00E	Drawing – 0942367000-00110HS LAW Vitrification System LMH LSM Sub Assembly 1 (East Line) Assembly & Machining
24590-QL-POA-MQR0-00001-02-00002	00E	Drawing – 0942367000-00210HS LAW Vitrification System LMH LSM Sub Assembly 2 (East Line) Assembly & Machining
24590-QL-POA-MQR0-00001-02-00003	00E	Drawing – 0942367000-00310HS LAW Vitrification System LMH LSM Sub Assembly 3 (East Line) Assembly & Machining
24590-QL-POA-MQR0-00001-02-00004	00E	Drawing – 0942367000-00410HS LAW Vitrification System LMH LSM Sub Assembly 4 (East Line) Assembly & Machining
24590-QL-POA-MQR0-00001-02-00005	00D	Drawing – 0942367000-00510HS LAW Vitrification System LMH LSM Sub Assembly 1 (West Line) Assembly & Machining
24590-QL-POA-MQR0-00001-02-00006	00D	Drawing – 0942367000-00610HS LAW Vitrification System LMH LSM Sub Assembly 2 (West Line) Assembly & Machining
24590-QL-POA-MQR0-00001-02-00007	00D	Drawing – 0942367000-00710HS LAW Vitrification System LMH LSM Sub Assembly 3 (West Line) Assembly & Machining
24590-QL-POA-MQR0-00001-02-00008	00D	Drawing – 0942367000-00810HS LAW Vitrification System LMH LSM Sub Assembly 4 (West Line) Assembly & Machining
24590-101-TSA-W000-0010-409-453	00C	Final – 100% Design – LAW, Seismic Pin Support Frame
24590-QL-POA-MQR0-00001-02-00015	00G	Drawing – 0942367000-00050HS LAW Vitrification System LMH Seismic Anchor Pin
24590-CM-POA-MQTS-00003-04-00001	00F	Drawing- Project 228 LAW: LMH – LAW Winch General Arrangement
24590-CM-POA-MQTS-00003-04-00091	00C	Drawing – Project 228 LAW:LMH – LAW Winch

24590-CM-POA-MQTS-00003-01-00004	00B	Manual – Operations Manual for the LAW Melter Import Winches/Pulleys L/DS CM
24590-CM-POA-MQTS-00003-04-00013	00E	Drawing – Project 228 LAW: LMH – Removable Pulley Block SE
24590-CM-POA-MQTS-00003-04-00071	00D	Drawing – Project 228 LAW: LMH – Removable Pulley Block SW
24590-CM-POA-MQTS-00003-04-00011	00C	Drawing – Project 228 LAW:LMH – Import Pulley Block NE
24590-CM-POA-MQTS-00003-04-00012	00F	Drawing – Project 228 LAW:LMH – Pulley Weldment NE
24590-CM-POA-MQTS-00003-04-00088	00C	Drawing – Project 228 LAW:LMH – Pulley Weldment NW
24590-CM-POA-MQTS-00003-04-00089	00C	Drawing – Project 228 LAW:LMH – Import Pulley Block NW
24590-CM-POA-MQTS-00003-04-00015	00B	Drawing – Project 228 LAW:LMH – Over-Travel Restraint
24590-CM-POA-MQTS-00003-01-00002	00C	Manual – Installation Manual for the LAW Melter Import Winches/Pulleys L/DS CM
24590-CM-POA-MJKH-00002-01-00026	00B	Drawing – 10 Ton Monorail Electric Wire Rope Hoist General Arrangement
24590-CM-POA-MJKH-00002-10-00003	00B	Manual – Operating, Parts & Maintenance Manual - 10 Ton Monorail Electric Wire Rope Hoist
24590-101-TSA-W000-0010-409-428	B00	Drawing – LAW Melter Rail Guide Assembly
24590-101-TSA-W000-0010-409-430	00B	95% Design – LAW, Base Roller Assembly
24590-101-TSA-W000-0010-409-450	00B	95% Design – LAW, Base Seismic Clamp Assembly
24590-101-TSA-W000-0010-409-453	00C	Final – 100% Design – LAW, Seismic Pin Support Frame
24590-101-TSA-W000-0010-409-456	00B	95% Design – LAW, Pulley Assembly
24590-QL-POA-MQR0-00001-06-00002	00B	Low Activity Waste Facility Special Rails L/S QL – Installation Manual
Architectural Documents		
24590-LAW-AD-A18T-05101001	010	LAW Vitrification Building Architectural Door Schedule EL 0'-0" & 3'-0"
24590-LAW-A1-A10T-01201003	008	LAW Vitrification Building Architectural Floor Plan EL 3'-0" Zone 3

5.3 System Design Documents

Document Number	Title
Mechanical Handling Diagrams	
24590-LAW-M7-LMH-00001001	LAW Vitrification System LMH Mechanical Handling Diagram Melter Handling System
24590-LAW-M7-LMH-00001007	LAW Vitrification System LMH Mechanical Handling Diagram Component Identification Tabulation

General Arrangement /Equipment Location Drawings	
24590-LAW-P1-P01T-00002	LAW Vitrification Building General Arrangement Plan at EL 3'-0"
24590-LAW-P1-P01T-00003	LAW Vitrification Building General Arrangement Plan at El 22'-0"
24590-LAW-P1-P23T-00034	LAW Vitrification Building Equipment Location Plan at EL 22'-0" Area 8
24590-LAW-P1-P23T-00035	LAW Vitrification Building Equipment Location Plan at EL 22'-0" Area 9
24590-LAW-P1-P23T-00018	LAW Vitrification Building Equipment Location Plan at EL 3'-0" Area 11
24590-LAW-P1-P23T-00023	LAW Vitrification Building Equipment Location Plan at EL 3'-0" Area 16
24590-LAW-P1-P23T-00024	LAW Vitrification Building Equipment Location Plan at EL 3'-0" Area 17
Design Proposal Drawings	
24590-LAW-M0-LMH-00001001	LAW Vitrification System LMH Design Proposal Drawing LSM Area Layout Plan at El. 3 Ft. -0 in
24590-LAW-M0-LMH-00001006	LAW Vitrification System LMH Design Proposal Drawing LSM Front Seismic Anchor Detail
24590-LAW-M0-LMH-00001007	LAW Vitrification System LMH Design Proposal Drawing LSM Left Rear Seismic Anchor Detail
24590-LAW-M0-LMH-00001008	LAW Vitrification System LMH Design Proposal Drawing LSM Right Rear Seismic Anchor Detail
24590-LAW-M0-LMH-00002001	LAW Vitrification System LMH Design Proposal Drawing LSM Rail Assembly
24590-LAW-M0-LMH-00002002	LAW Vitrification System LMH Design Proposal Drawing LSM Rail Assembly Details
24590-LAW-M0-LMH-00002003	LAW Vitrification System LMH Design Proposal Drawing LSM Rail Assembly Details
24590-LAW-M0-LMH-00003	LAW Vitrification System LMH Design Proposal Drawing LSM Enclosure Skid
24590-LAW-M0-LMH-00017001	LAW Vitrification System LMH Design Proposal Drawing LAW Melter Assembly and Spent Melter Removal Pad Layout
24590-LAW-M0-LMH-00017002	LAW Vitrification System LMH Design Proposal Drawing LAW Melter Assembly and Spent Melter Removal Pad Sections and Details
24590-LAW-M0-LMH-00018001	LAW Vitrification System LMH Design Proposal Drawing Winching Import Sequence
24590-LAW-M0-LMH-00018002	LAW Vitrification System LMH Design Proposal Drawing Winching Export Sequence
24590-LAW-M0-LMH-00018003	LAW Vitrification System LMH Design Proposal Drawing Winching Import/Export Equipment Details
24590-LAW-M0-LMH-00021001	LAW Vitrification System LMH Design Proposal Drawing LAW Melter Over-Travel Restraint Assembly and Plant
24590-LAW-M0-LMH-00021002	LAW Vitrification System LMH Design Proposal Drawing LAW Melter Over-Travel Restraint Sections and Details
24590-LAW-M0-LMH-00022	LAW Vitrification System LMH Melter Rails Filler Plate Details

Engineering Specifications	
24590-WTP-3PS-MQTS-T0001	Engineering Specification for LAW Winch Arrangement
24590-LAW-3PS-AE00-T00001	Engineering Specification for Low Activity Waste Melters
Material Requisitions	
24590-CM-MRA-MQTS-00003	Material requisition Law Melter Import Winches/Pulleys L/Ds CM
24590-CM-MRA-MJKH-00002	Material Requisition Monorail Hoists, Jib Cranes, Under Running Ringle Commercial C/s
Calculations	
24590-QL-POA-MQR0-00001-03-00001	Calculation - LAW rails allowable bearing load
24590-QL-POA-MQR0-00001-03-00003	Calculation Sheet Seismic Qualification of the LAW Facility Melter Rails
24590-CM-POA-MQTS-00003-05-00001	Calculation – LAW Winch Calc – Calc-M-228-001
Architectural Documents	
24590-LAW-AD-A18T-05101001	LAW Vitrification Building Architectural Door Schedule EL 0'-0" & 3'-0"
24590-LAW-A1-A10T-01201003	LAW Vitrification Building Architectural Floor Plan EL 3'-0" Zone 3
24590-LAW-A1-A10T-01201004	LAW Vitrification Building Architectural Floor Plan at EL 3'-0" Zone 4

Appendix A - Test Objectives, Conditions, and Acceptance Criteria

NOTE: Demonstrations and Tests identified in this appendix are preliminary, pending completion of design activities. They are established to document the flowdown of verification needs established in Section 3 but are not sufficiently detailed for development of specific system and equipment test plans. They may be used for general planning only. This note is to be removed when design is sufficiently progressed to provide the details needed to establish the basis for testing and acceptance criteria.**[HOLD]**

Requirement Section No.	Test (T) or Demo (D)	SU or COM	Plan (Including SSCs)	Acceptance Criteria (TAC or GTC)*	Notes/Comments	Test Conditions
3.5.4.1	D	SU/COM	Demonstrate the hoist brakes set when the power is off. C1/C2 Airlock Monorail CTN: LMH-HST-00001	**(GTC)** The hoist brakes set when the power is off.		
3.6.1.3	D	SU/COM	Demonstrate transfer of LPH equipment to the entry position 2I (for both west-bay and east-bay).	**(GTC)** Successfully move the LPH equipment to the entry position 2I.		1) LPH equipment positioned on melter assembly pad. • The LPH equipment is moved to the entry position 2I.
3.6.1.3	D	SU/COM	Demonstrate transfer of LPH equipment to the C1/C2 airlock position 3I (for both west-bay and east-bay). C1/C2 Entry Door CTN:L-0113-4, L-0113-3	**(GTC)** Successfully move the LPH equipment to the C1/C2 airlock position 3I.		2) LPH equipment movement is a continuation from step 1. • The C1/C2 entry door is opened. • The LPH equipment is moved to the C1/C2 airlock position 3I.
3.7.4.2	D	SU/COM	Demonstrate the capability to stop equipment deemed to have a credible injury hazard with collocated emergency stops.	**(GTC)** When the emergency stop button is contacted the equipment will stop operating in a safe condition.		
3.7.4.3	D	SU/COM	Demonstrate the emergency stop reporting and reset functions.	**(GTC)** Successful reporting of the emergency stop position and resetting of the emergency stop.		
N/A	T	SU/COM	Test C1/C2 airlock monorail ability to raise/lower C1/C2 airlock floor hatch covers. C1/C2 Airlock Monorail CTN: LMH-HST-00001	**(GTC)** Successful C1/C2 airlock monorail hoist raising/lowering of C1/C2 airlock floor hatch covers		
N/A	T	SU/COM	Test C1/C2 airlock monorail hoist motion within specified speeds. C1/C2 Airlock Monorail CTN: LMH-HST-00001	**(GTC)** The C1/C2 airlock monorail is shown to have full range of hoist motion within specified speeds.		
N/A	T	SU/COM	Test C1/C2 airlock monorail trolley motion with specified speeds. C1/C2 Airlock Monorail CTN: LMH-HST-00001	**(GTC)** The C1/C2 airlock monorail is shown to have full range of trolley motions within specified speeds.		

Requirement Section No.	Test (T) or Demo (D)	SU or COM	Plan (Including SSCs)	Acceptance Criteria (TAC or GTC)*	Notes/Comments	Test Conditions
N/A	T	SU/COM	Test C1/C2 airlock monorail hoist lift height and hoist HI & LOW limit switches. C1/C2 Airlock Monorail CTN: LMH-HST-00001	**(GTC)** The C1/C2 airlock monorail hoist maximum (HI) and lower (LOW) lift height are as specified.		
N/A	T	SU/COM	Test C1/C2 airlock monorail hook approach. C1/C2 Airlock Monorail CTN: LMH-HST-00001	**(GTC)** The C1/C2 airlock monorail hook successfully approaches as specified.		
N/A	T	SU/COM	Test C1/C2 airlock monorail ability to identify hoist overload and ability to stop hoist operation. C1/C2 Airlock Monorail CTN: LMH-HST-00001	**(GTC)** Successful actuation of C1/C2 airlock monorail overload limit switch, preventing further hoist operation.		

Notes:
* Test acceptance criteria (TAC) are based on requirements from authorization basis documents. General test criteria (GTC) are requirements from other sources.
CTN = component tag number

Appendix B - Descriptions of System Functional Flow and Interactions

Function: A.1	Stage New Melter Directly on LAW Melter Rails in Position 1I
Detailed description: Preconditions for new melter import: (1) A new melter is fully-assembled (by others) on the melter assembly pad. (2) A fully-functional melter lift system is available on the melter assembly pad. The new melter is lifted using the melter lift system onto the LAW melter rails in position 1I.	
Initiation: This function initiates when the new melter is fully assembled and docked along the LAW melter assembly pad.	
Termination: This function terminates when the melter is in position 1I.	
Parallel or sequential functions: Sequential with other new melter import functions A.1 through A.4.	
Applicable Modes: Maintenance Operations	

Function: A.2	Transport Melter to Entry Position 2I
Detailed description: The C1/C2 entry door (L-0113-3, -4) is manually opened by the operator. The melter is transported on the LAW melter rails to the entry position 2I just outside the door threshold of the LAW facility.	
Initiation: This function initiates when the C1/C2 entry door is manually opened by the operator.	
Termination: This function terminates when the melter is in the entry position 2I.	
Parallel or sequential functions: Sequential with other new melter import functions A.1 through A.4.	
Applicable Modes: Maintenance Operations	

Function: A.3	Transport Melter to C1/C2 Airlock Position 3I
Detailed description: The C1/C2 entry door is opened by the operator. The melter is then transported at on the LAW melter rails to the airlock position 3I. Finally, the C1/C2 entry door is closed by the operator.	
Initiation: This function initiates when the C1/C2 entry door is opened by the operator. .	
Termination: This function terminates when the C1/C2 entry door is closed by the operator.	
Parallel or sequential functions: Sequential with other new melter import functions A.1 through A.4.	
Applicable Modes: Maintenance Operations	

Function: A.4	Transport Melter to Operating Position 4I
Detailed description: The C2/C3 airlock door is manually opened by the operator. The melter is transported on the LAW melter rails to the operating position 4I. Once in the operating position 4I, the melter is seismically secured on the LAW melter rails, providing the melter with north/south directive seismic restraint. The C2/C3 airlock door is then manually closed by the operator.	
Initiation: This function initiates when the C2/C3 airlock door is manually opened by the operator.	
Termination: This function terminates when the C2/C3 airlock door is manually closed by the operator.	
Parallel or sequential functions: Sequential with other new melter import functions A.1 through A.4.	
Applicable Modes: Maintenance Operations	

Function: B.1	Stage Spent Melter in Operating Position 1E for Export
Detailed description: The spent melter is staged in the operating position 1E for final export. Operations personnel prepares the spent melter to ensure the spent melter is ready and suitable for export.	
Initiation: This function initiates when a failed/spent melter is awaiting retrieval from the melter gallery.	
Termination: This function terminates when the operator ensures the failed/spent melter is ready for export.	
Parallel or sequential functions: Sequential with other spent melter export functions B.1 through B.4.	
Applicable Modes: Maintenance Operation	

Function: B.2	Transport Spent Melter to C1/C2 Airlock Position 2E
Detailed description: The C2/C3 airlock door is then manually opened by the operator. The melter is released from the	

seismic restraint, enabling north/south directive movement. The spent melter is then transported on the LAW melter rails to the C1/C2 airlock position 2E. The C2/C3 airlock door is finally manually closed by the operator.
Initiation: This function initiates when the C2/C3 airlock door is manually opened by the operator.
Termination: This function terminates when the C2/C3 airlock door has been manually closed by the operator.
Parallel or sequential functions: Sequential with other spent melter export functions B.1 through B.4.
Applicable Modes: Maintenance Operations

Function: B.3	Transport Spent Melter to Export Position 3E
Detailed description: The C1/C2 entry door is manually opened by the operator. The spent melter is then transported on the LAW melter rails to the export position 3E on the melter assembly pad. The C1/C2 entry door is then manually closed by the operator.	
Initiation: This function initiates when the C1/C2 entry door is manually opened by the operator.	
Termination: This function terminates when the C1/C2 entry door is manually closed by the operator.	
Parallel or sequential functions: Sequential with other spent melter export functions B.1 through B.4.	
Applicable Modes: Maintenance Operations	

1) For all B functions, the word spent and failed can be used interchangeably.

Function: C.1	Stage New Equipment for Entry on Melter Assembly Pad Positon 1I
Detailed description: The new equipment is prepared on the melter assembly pad position1I for entry.	
Initiation: This function initiates when the new equipment has arrived on the melter assembly pad.	
Termination: This function terminates when the new equipment is staged and ready for transport.	
Parallel or sequential functions: Sequential with other new equipment import functions C.1 through C.5.	
Applicable Modes: Maintenance Operations	

Function: C.2	Transport Equipment to Entry Position 2I
Detailed description: The new equipment is transported to entry position 2I just outside the door threshold of the LAW facility.	
Initiation: This function initiates when the new equipment begins transport to entry position 2I.	
Termination: This function terminates when the new equipment arrives in entry position 2I just outside the door threshold of the LAW facility.	
Parallel or sequential functions: Sequential with other new equipment import functions C.1 through C.5.	
Applicable Modes: Maintenance Operations	

Function: C.3	Transport Equipment to C1/C2 Airlock Position 3I
Detailed description: The C1/C2 entry door is manually opened by the operator. The new equipment is then transported into the C1/C2 airlock to position 3I. Finally, the operator manually closes the C1/C2 entry door.	
Initiation: This function initiates when the C1/C2 entry door is manually opened by the operator.	
Termination: This function terminates when the C1/C2 entry door is manually closed by the operator.	
Parallel or sequential functions: Sequential with other new equipment import functions C.1 through C.5.	
Applicable Modes: Maintenance Operations	

Function: C.4	Unload Equipment in C1/C2 Airlock Position 3I
Detailed description: The new equipment is unloaded in the C1/C2 airlock. The new equipment is then placed in a convenient location in the C1/C2 airlock providing access to the C1/C2 airlock monorail (LMH-HST-00001) and the C1/C2 airlock floor hatch.	
Initiation: This function initiates when the new equipment has begun unloading.	
Termination: This function terminates when the new equipment is placed in a convenient location in the C1/C2 airlock.	
Parallel or sequential functions: Sequential with other new equipment import functions C.1 through C.5.	
Applicable Modes: Maintenance Operations	

Function: C.5	Transfer Equipment to Monorail Maintenance Area Using C1/C2 Monorail
Detailed description: The C1/C2 airlock monorail picks up and removes the C1/C2 floor hatch covers in the C1/C2 airlock.	

The C1/C2 airlock monorail then sets down the C1/C2 floor hatch covers in the C1/C2 airlock away from the new equipment. Following this, the C1/C2 airlock monorail transfers the new equipment through the open floor hatch in the C1/C2 airlock and sets down the new equipment in an appropriate location on the floor of the LPH monorail maintenance area on elevation -21'-0". The C1/C2 airlock monorail then raises the wire rope hoist back through the open floor hatch and into the C1/C2 airlock. Finally, the C1/C2 airlock monorail lifts the C1/C2 floor hatch covers off of the floor in the C1/C2 airlock and place them back onto the C1/C2 airlock floor hatch. The C1/C2 airlock monorail returns to its starting position.
Initiation: This function initiates when the C1/C2 airlock monorail picks up the C1/C2 floor hatch covers.
Termination: This function terminates when the C1/C2 airlock monorail returns to its starting position.
Parallel or sequential functions: Sequential with other new equipment import functions C.1 through C.5.
Applicable Modes: Maintenance Operations

Function: D.1	Stage Spent Equipment for Export in Monorail Maintenance Area
Detailed description: The spent equipment is prepared and staged for export in the monorail maintenance area. The spent equipment is moved to a convenient location in the monorail maintenance area accessible to the C1/C2 airlock monorail by means of the C1/C2 airlock floor hatch.	
Initiation: This function initiates when equipment is deemed to need extraction.	
Termination: The function terminates when the spent equipment is in a convenient location in the monorail maintenance area accessible to the C1/C2 airlock monorail.	
Parallel or sequential functions: Sequential with other spent equipment export functions D.1 through D.4.	
Applicable Modes: Maintenance Operations	

Function: D.2	Transfer Spent Equipment to C1/C2 Airlock Position 2E
Detailed description: The C1/C2 airlock monorail picks up the C1/C2 floor hatch covers in the C1/C2 airlock. The C1/C2 airlock monorail then sets down the C1/C2 floor hatch covers in an appropriate location in the C1/C2 airlock away from the spent equipment set-down location.. The C1/C2 airlock monorail then lifts the spent equipment up through the open floor hatch in the C1/C2 airlock and sets down the spent equipment in a designated location on the floor of the C1/C2 airlock accessible to operations personnel and away from the C1/C2 floor hatch covers. Finally, the C1/C2 airlock monorail lifts the C1/C2 floor hatch covers off of the floor in the C1/C2 airlock and back onto the C1/C2 airlock floor hatch. The C1/C2 airlock monorail returns to its starting position.	
Initiation: This function initiates when the C1/C2 airlock monorail picks up the C1/C2 floor hatch covers.	
Termination: This function terminates when the C1/C2 airlock monorail returns to its starting position.	
Parallel or sequential functions: Sequential with other spent equipment export functions D.1 through D.4.	
Applicable Modes: Maintenance Operations	

Function: D.3	Stage Spent Equipment for Export in C1/C2 Airlock Position 2E
Detailed description: The spent equipment is prepared for export in C1/C2 airlock position 2E.	
Initiation: This function initiates when the spent equipment is set down in the C1/C2 airlock position.	
Termination: This function terminates when the spent equipment is staged and ready for export.	
Parallel or sequential functions: Sequential with other spent equipment export functions D.1 through D.4.	
Applicable Modes: Maintenance Operations	

Function: D.4	Transport Spent Equipment to Export Position 3E
Detailed description: The C1/C2 entry door is manually opened by the operator. The spent equipment is then transported to the export position 3E for disposal. Finally, the operator manually closes the C1/C2 entry door.	
Initiation: This function initiates when the C1/C2 entry door is manually opened by the operator.	
Termination: This function terminates when the C1/C2 entry door is manually closed by the operator.	
Parallel or sequential functions: Sequential with other spent equipment export functions D.1 through D.4.	
Applicable Modes: Maintenance Operations	

1) For all D functions, the word spent and failed can be used interchangeably.

Function: E.1	Receive Electrical Power
Detailed description: Electrical power to the LMH equipment and instruments is supplied by the LVE system.	
Initiation: This function initiates when the LAW facility is in start-up operations.	

Termination: This function terminates when LAW glass production operations are complete.
Parallel or sequential functions: All functions
Applicable Modes: Maintenance Operations

Appendix C- Active Safety Instruments and Functions

Information in the following table reflects the current design of active safety instruments, including functions, and safety designations per the piping and instrumentation diagrams (P&IDs), and associated equipment and instrument lists. In some cases, the current safety classification of the SSCs in design is known to exceed the design requirements. The information will be updated as needed to reflect changes to the design. The information below is provided in support of Plant Engineering and Operations and does not represent design requirements.

No active safety instrumented functions are identified.

Appendix D - Reserved – System Procedures

Reserved

Appendix E - Reserved - System History

Reserved

Issued by
RPP-WTP PDC

BECHTEL

Document title:	**LAW Container Pour Handling (LPH) System Design Description**
Document number:	24590-LAW-3ZD-LPH-00001
Revision number:	0
Type:	☒ System Design Description ☐ Facility Design Description
Originator(s):	Peter Suyderhoud
Checked by:	Neil Darwen
Checker's signature:	Signature — Date: 7/9/15
Concurrence:	~~Mark Johnson~~ 7/16/15 Jeremy Wilkins
Concurrence signature:	Manager of Production Engineering Signature — Date: 7/16/15
Concurrence:	Ian Milgate
Concurrence signature:	Project Technical Director and Design Authority Signature — Date: 7/20/15
Approved by:	Natalie Harkey
Approver's position:	Systems Engineering Manager
Approver's signature:	Systems Engineering Manager Signature — Date: 7/20/2015

Validation – signatures below indicate acceptance of the requirements established in Section 3 as the complete and correct set of requirements for this system relative to the requirement sources for which the Requirement Developer is responsible.

Appl.	Requirement Area	Designated Validator	Signature	Date
☐	Architectural Design			
☐	Civil/Structural Design			
☒	Controls & Instrumentation Design	P. Snyderhoud for Wayne Underhill per email	[illegible]	7/09/15
☒	Electrical Design & AHJ	P. Snyderhoud for Gary Locke per email	[illegible]	7/09/15
☒	Fire Protection Engineering	P. Snyderhoud for Ben Johnson per email	[illegible]	7/09/15
☒	HVAC Design	P. Snyderhoud for Julian Lewis per email	[illegible]	7/09/15
☒	Mechanical Handling Design	P. Snyderhoud for Julian Lewis per email	[illegible]	7/09/15
☒	Mechanical Systems Design	P. Snyderhoud for Julian Lewis per email	[illegible]	7/09/15
☐	Plant Design			
☐	Process Engineering			
☐	Interface (External)			
☐	Interface (Internal)			
☒	System Functions and Requirements	NEIL J DARWEN	[illegible]	7/9/15
☒	Equipment Environmental Qualification	P. Snyderhoud for Gurbal Rajagopal per email	[illegible]	7/09/15
☒	Materials Engineering / Technology	P. Snyderhoud for Grant Marr per email	[illegible]	7/09/15
☐	Plant Software Design			
☒	Environmental Protection (ESH)	P. Snyderhoud for Roger Leadon per email	[illegible]	7/09/15
☒	Nuclear Safety Engineering	P. Snyderhoud for Steve Hill per email	[illegible]	7/09/15
☐	Criticality Safety			
☒	Radiological Engineering	P. Snyderhoud for Ross Lauber per email	[illegible]	7/09/15
☐	Industrial Safety/Hygiene (ESH)			
☐	Mission (WTP Contract functional/performance rqmts)			
☒	Operations Requirements Document (Plant Ops)	P. Snyderhoud for Rand Bunn per email	[illegible]	7/09/15
☒	Quality Assurance	P. Snyderhoud for Chuck Allen per email	[illegible]	7/09/15
☐	Safeguards & Security			
☐	Startup			
☐	Transportation & Logistics			

* Validation not required for alpha/preliminary criteria documents.

History Sheet

Rev	Reason for revision	Revised by
0	Initial issue. Supersedes 24590-LAW-3YD-LPH-00001, Rev 4, *System Description for the LAW Container Pour Handling (LPH) System*	P. Suyderhoud

Contents

1 Introduction 6
1.1 System Identification 6
1.2 Limitations and Scope 6
1.3 Ownership and Maintenance 7
1.4 Definitions/Glossary 7
1.5 Acronyms and System Designators 7
1.5.1 Acronyms 7
1.5.2 System Designators 9
2 General Overview 9
2.1 System Functions/Safety Functions 12
2.2 System Classification 12
2.3 Basic Operational Overview 12
3 Design Requirements 15
3.1 Requirements 15
3.2 Bases 16
3.3 References 16
3.4 General Requirements 16
3.4.1 Mission and Functional / Performance Requirements (Including States/Modes) 16
3.4.2 Nuclear Safety, ALARA, Environmental, and Other Regulatory Requirements 19
3.4.3 System Interface Requirements 20
3.4.4 Other Technical, Specialty, Operations and Maintenance Requirements 20
3.5 Crane and Hoist Requirements 23
3.5.1 Mission and Functional / Performance Requirements (Including States/Modes) 23
3.5.2 Nuclear Safety, ALARA, Environmental, and Other Regulatory Requirements 26
3.5.3 System Interface Requirements 26
3.5.4 Other Technical, Specialty, Operations and Maintenance Requirements 26
3.6 Bogie Requirements 27
3.6.1 Mission and Functional / Performance Requirements (Including States/Modes) 27
3.6.2 Nuclear Safety, ALARA, Environmental, and Other Regulatory Requirements 28
3.6.3 System Interface Requirements 28
3.6.4 Other Technical, Specialty, Operations and Maintenance Requirements 28
3.7 Grapple Requirements 28
3.8 Master-Slave Manipulator Requirements 28
3.8.1 Mission and Functional / Performance Requirements (Including States/Modes) 28
3.8.2 Nuclear Safety, ALARA, Environmental, and Other Regulatory Requirements 29
3.8.3 System Interface Requirements 29
3.8.4 Other Technical, Specialty, Operations and Maintenance Requirements 29
3.9 Shield Door and Hatch Requirements 29
3.9.1 Mission and Functional / Performance Requirements (Including States/Modes) 29
3.9.2 Nuclear Safety, ALARA, Environmental, and Other Regulatory Requirements 31
3.9.3 System Interface Requirements 31

3.9.4 Other Technical, Specialty, Operations and Maintenance Requirements 31

3.10 Monitoring and Controls Requirements 32
3.10.1 Mission and Functional / Performance Requirements (Including States/Modes) 32
3.10.2 Nuclear Safety, ALARA, Environmental, and Other Regulatory Requirements 33
3.10.3 System Interface Requirements 33
3.10.4 Other Technical, Specialty, Operations and Maintenance Requirements 34

3.11 Other Structures, Systems, and Components Requirements 36
3.11.1 Mission and Functional / Performance Requirements (Including States/Modes) 36
3.11.2 Nuclear Safety, ALARA, Environmental, and Other Regulatory Requirements 36
3.11.3 System Interface Requirements 36
3.11.4 Other Technical, Specialty, Operations and Maintenance Requirements 37

3.12 Relevant Codes and Standards 37
3.12.1 Codes of Record 37
3.12.2 WTP Design Criteria, Design Guides, and General Specifications 38

4 System Description 40

4.1 Configuration Information 40
4.1.1 Description of System, Subsystems, and Major Components 40
4.1.2 Boundaries and Interfaces 58
4.1.3 Physical Layout and Location 60
4.1.4 Principles of Operation 62
4.1.5 System Reliability Features 64
4.1.6 System Control Features 64

4.2 Operations 66
4.2.1 Initial Configuration (Pre-startup) 66
4.2.2 System Startup 67
4.2.3 Normal Operations 67
4.2.4 Off-Normal Operations 67
4.2.5 System Shutdown 67
4.2.6 Safety Management and Administrative Controls 67

4.3 Testing and Maintenance 67
4.3.1 Temporary Configurations 67
4.3.2 TSR-Required Surveillances 67
4.3.3 Non-TSR Inspections and Testing 67
4.3.4 Maintenance 67

4.4 Supplemental Information 67

5 References and Design Documents List 68

5.1 Source / Basis References 68

5.2 Other References 69

5.3 System Design Documents 71

Appendices

Appendix A – Test Objectives, Conditions, and Acceptance Criteria A-1

Appendix B – Descriptions of System Functional Flow and Interactions B-1

Appendix C – Active Safety Instruments and Functions C-1

Appendix D – [Reserved] System Procedures D-1
Appendix E – [Reserved] System History E-1

Tables

Table 2-1 Functional Analysis & Crosswalk to Requirements 14
Table 3-1 Applicable Codes and Standards for LPH Cranes and Hoists 23
Table 3-2 LAW LPH Applicable Codes and Standards 37
Table 3-3 WTP Design Criteria, Guides, and General Specifications Applicable to LAW LPH 39
Table 4-1 Equipment Layout and Location 60
Table 4-2 Remote Status Indications for LAW LPH System 64
Table 4-3 Packaged Equipment Local Controls 66

Figures

Figure 2-1 LPH System Context Diagram 10
Figure 2-2 LPH System Simplified Process Flow Diagram 11
Figure 2-3 LPH System Functional Block Diagram 13
Figure 4-1 Container Transport Bogie 41
Figure 4-2 Bogie Maintenance Doors 42
Figure 4-3 Bogie Recovery System 43
Figure 4-4 Monorail Maintenance Doors 46
Figure 4-5 Pour Cave Shield Doors 47
Figure 4-6 Pour Cave Turntable 49
Figure 4-7 Container Lower Overpack 50
Figure 4-8 Pour Cave Elevator and Modified Platform 51
Figure 4-9 Transfer Corridor Shield Door 52
Figure 4-10 Buffer Store Crane Maintenance Shield Door 55
Figure 4-11 Master-Slave Manipulator 56

1 Introduction

1.1 System Identification

This system design description (SDD) defines the technical, functional, and performance requirements of the low-activity waste (LAW) container pour handling (LPH) system. This document details the waste treatment requirements, environmental compliance requirements, and authorization basis requirements of the LPH as they are currently known and understood. This SDD describes the process and functional requirements of the LPH, including the following:

- Services and utility requirements, operating materials and supplies, and other external interfaces
- Operations limits and design bases
- Other criteria and requirements pertinent to LPH design

The LPH system provides all the mechanical handling (MH) operations required to import and export new or filled containers through the LAW pour caves located on the (-) 21 ft. elevation of the LAW Facility. The boundaries, system interfaces and functional description of the LPH system are provided in Section 2.

1.2 Limitations and Scope

The scope of this document is to provide an authoritative source for the collected set of requirements applicable to the design of the LPH system, inclusive of interface requirements with other systems. The SDD is prepared in accordance with 24590-WTP-3DP-G04B-00093, *System and Facility Design Descriptions*. The intended use of these collected requirements is to establish the following:

- Inform the LPH design effort
- Provide a validated basis upon which to confirm implementation of design requirements
- Provide the expected means of verification for requirements, including those that are post-construction (i.e., startup and commissioning test objectives and acceptance criteria)

All requirements established in this document are intended to be verified to be implemented in design and/or physical configuration using a graded approach commensurate with importance and risk.

Where numeric values are provided within requirements in Section 3, these values are provided without additional margin. For example, if a value is established in 24590-WTP-DB-ENG-01-001, *Basis of Design*, no attempt is made to remove any margin that may or may not have gone into the establishment of that value, neither has any margin been added. Where values are stated as minimums or maximums, there is no expectation that additional margin be applied in the verifications that the design requirements have been met. Testing required to be performed in accordance with external codes and standards must follow the rules established in those documents.

This document is intended to be used in support of design development, design verification, turnover, start-up testing, and commissioning activities. This document will be maintained current relative to changes in source requirements documents. Updates shall be made concurrent with these changes to source requirements, or implementation shall be tracked for completion in accordance with 24590-WTP-GPG-ENG-0170, *Impact Evaluation*.

Engineers are expected to be able to use the requirements in Section 3 of this document as input for design development without recourse to the upper-tier source documents or searches of the Design Criteria Database (Technical Requirements Management System). Design engineers are still required to ensure that requirements contained with the discipline/functional standards incorporated by reference in Section 3 are followed. These documents contain additional criteria that are based on applications of external codes/standards, corporate best practices, and engineering management expectations for a consistent approach to design.

Certain requirement statements in this document are preceded by a "**[HOLD]**" notation. This notation is used when there are unresolved technical issues, known inconsistencies among source requirements, or other management suspensions of work requiring resolution. Requirements with the "**[HOLD]**" notation may be used to proceed with preliminary or committed design (with inclusion of appropriate holds) but shall not be used in support of fabrication or construction until the "**[HOLD]**" is removed.

The contents of Section 4 are being developed in a phased approach in support of future operations and maintenance. At this revision, only the contents of Sections 4.1.1 through 4.1.4 and 4.1.6 have been updated and verified. Sections 4.1.5, 4.2, 4.3 and 4.4 are currently reserved and will be updated in a later phase after the work to support completion of these sections has been completed.

1.3 Ownership and Maintenance

The Design Authority (DA) organization is responsible for the preparation and maintenance of this document through turnover of the included systems to Operations. Thereafter, maintenance of this document is responsibility of the Plant Engineering organization; however, the Engineering DA organization retains responsibility for the establishment and definition of design requirements.

1.4 Definitions/Glossary

Confinement - For consistency, regardless of usage elsewhere, *confinement* is used in this document to denote the controls used to prevent or minimize the release or migration of airborne contaminants, including aerosols, hazardous vapors, or gases.

Containment - For consistency, regardless of usage elsewhere, *containment* is used in this document to denote the controls used to prevent or minimize the release or migration of liquid or liquid-entrained contaminants.

1.5 Acronyms and System Designators

1.5.1 Acronyms

A	analysis
AISC	American Institute of Steel Construction
ALARA	as low as reasonably achievable
ANSI	American National Standard Institute
ASD	allowable stress design
ASME	American Society of Mechanical Engineers
AWS	American Welding Society
BNI	Bechtel National, Inc.

BOD	Basis of Design
C&I	controls & instrumentation
CAM	continuous air monitor
CCTV	closed circuit television
CFD	computational fluid dynamics
CFR	Code of Federal Regulations
CMAA	Crane Manufacturers Association of America
COM	commissioning
CON	construction
CS&A	Civil Structural & Architectural
CTN	component tag number
D	demonstration
DOE	United States Department of Energy
ECI	export controlled information
ENG	Engineering
E-stop	emergency stop
FCR	facility control room
HLW	High Level Waste (Facility)
HVAC	heating, ventilation, and air conditioning
I	inspection
IBC	International Building Code
ICN	integrated control network
IEEE	Institute of Electrical and Electronics Engineers
IESNA	Illuminating Engineering Society of North America
ILAW	immobilized low-activity waste
LAB	Analytical Laboratory (Facility)
LAW	Low-Activity Waste (Facility)
LOI	local operator interface
MCC	motor control center
MH	mechanical handling
MSM	master slave manipulator
MTG	metric tons of glass
NFPA	National Fire Protection Association
ORD	Operations Requirements Document
P&ID	piping and instrumentation diagram
PTZ	pan tilt zoom
REC	receiving
ROIN	requirement object identification number
SAI	safety affecting instrumentation
SC	safety class
SC-x	seismic category - x
SDD	system design description
SPAD	shielded personnel access door

SQR	supplier quality representative
SRD	Safety Requirements Document, Volume II
SS	safety significant
SSC	structures, systems, or components
SU	startup
SUB	subcontractor
SUP	supplier
T	test
UBC	uniform building code
WAI	waste acceptance impacting
WTP	Hanford Tank Waste Treatment and Immobilization Plant

1.5.2 System Designators

C5V	contamination level 5 system
EMJ	environmental monitoring system
ISA	instrument service air system
LFH	LAW container finishing handling system
LMH	LAW melter handling system
LMP	LAW melter process system
LPH	LAW container pour handling system
LRH	LAW container receipt handling system
LTE	lighting electrical system
LVE	low voltage electrical (480/208/120 V) system
MHJ	mechanical handling control
PCW	plant cooling water system
PPJ	programmable protection system
PTJ	process and mechanical handling CCTV system

2 General Overview

The LPH system supports the vitrification process by moving containers into and out of the LAW pour caves, placing the containers under the melter pour spout to be filled with glass by the LAW melter process (LMP) system, and allowing for preliminary container cooling. It also interfaces with the container receipt handling (LRH) and container finish handling (LFH) systems to support importing and exporting containers to the LAW container transfer corridor.

Figure 2-1 provides a contextual depiction of the LPH system in terms of its primary interrelationships with other systems and utilities. This diagram is used in support of functional and performance definition at the system level. Bold, blue arrows are used in the figure to highlight the primary functions of the LPH system, while the black arrows illustrate the supporting systems and utilities. Figure 2-2 provides a process flow diagram of the overall LPH system, showing the mechanical handling operations provided to support container import and export. Refer to Section 1.5 for the list of relevant system designators.

Figure 2-1 LPH System Context Diagram

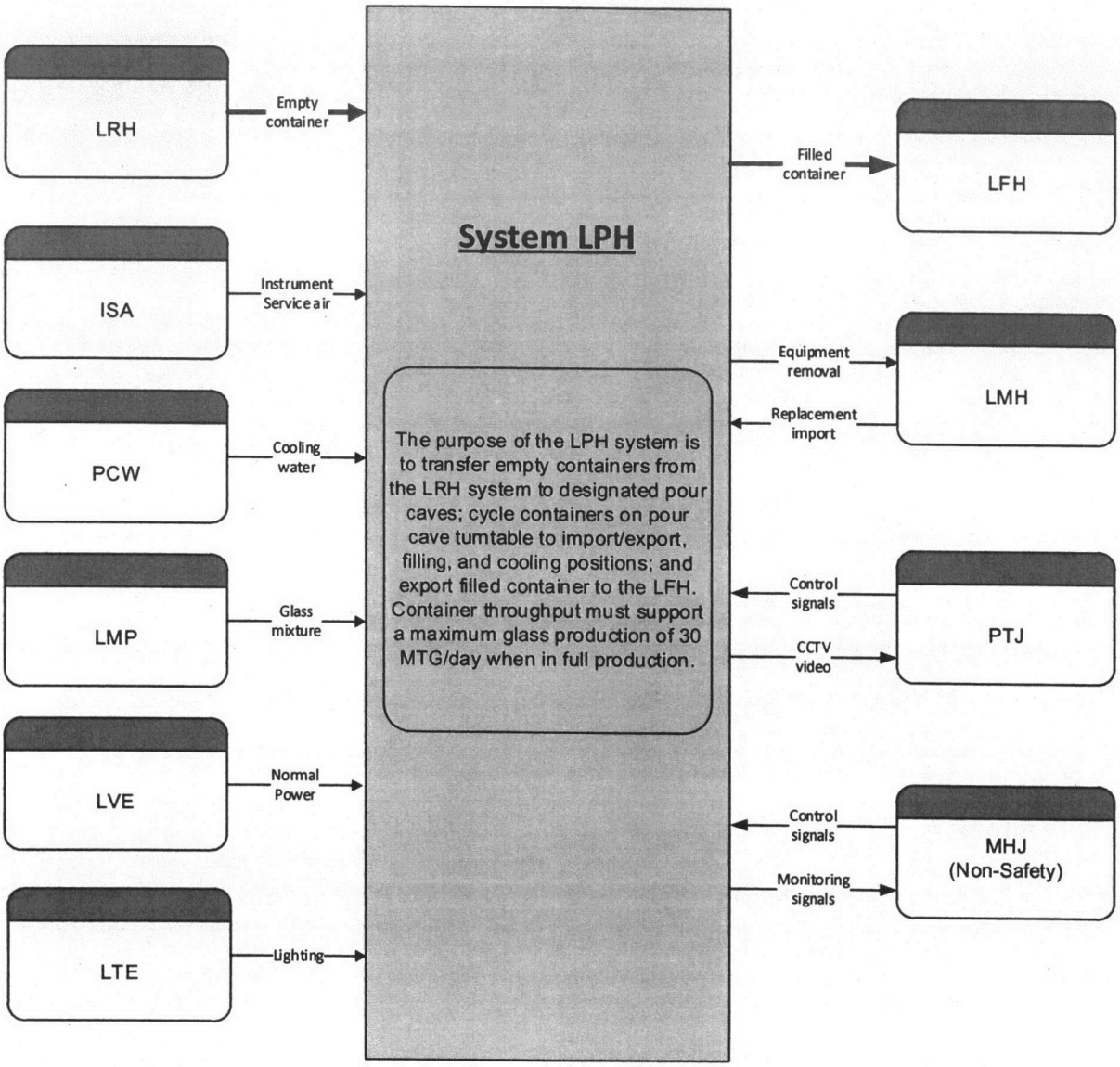

Figure 2-2 LPH System Simplified Process Flow Diagram

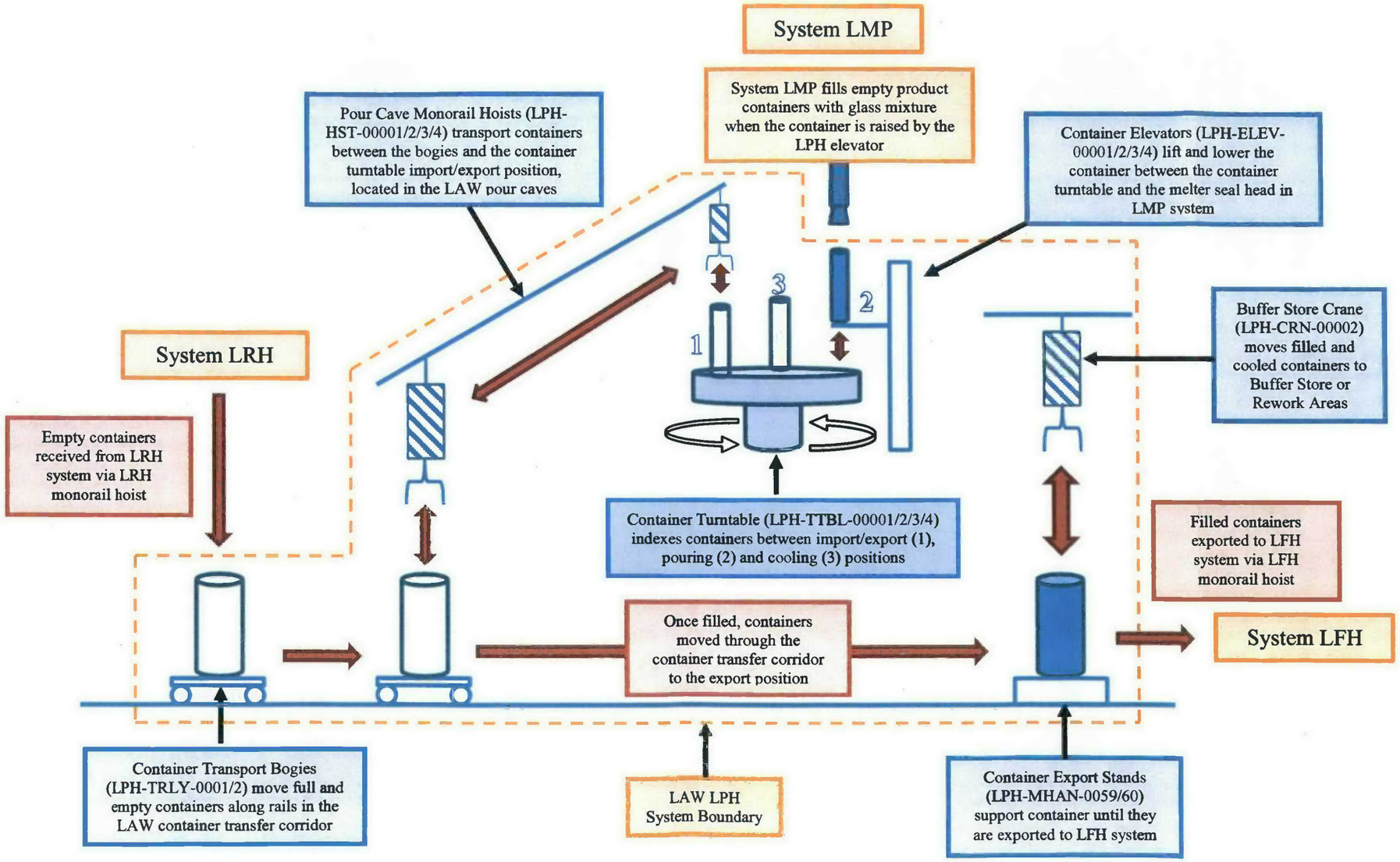

2.1 System Functions/Safety Functions

This section defines the LPH functions and attributes that need to be addressed by the system design. Figure 2-3 provides the functional block diagram for the LPH system, indicating the internal and external systems and utilities that provide the primary support or interface for that function. Section 3 provides the design and performance design requirements to meet both functional and other requirements.

System interfaces are provided for reference only. See Section 1.5 for the list of relevant system designators.

The functions included in Figure 2-3 are the primary and secondary level functions of the LAW LPH system. These functions are further described in Table 2-1. Where appropriate to support definition of functional and design requirements, functions have been further decomposed and additional levels of supporting functions are also described. The requirement section number provides the location of the applicable functional analysis incorporated into system requirements.

Appendix B provides a further decomposition of system functions, including initiating, terminating, and integrating events and functions.

2.2 System Classification

The LPH system contains components with the following classifications/designations:

- ☐ Safety Class
- ☐ Safety Significant
- ☒ Dangerous Waste Permit affecting
- ☐ Air Permit affecting
- ☐ Waste Acceptance Impacting (WAI)
- ☒ General

2.3 Basic Operational Overview

A functional description of the system is provided in Sections 2 and 2.1 which provide the context diagram for the system, interfaces with other systems, a simplified system diagram, a functional block diagram, and descriptions of the system functions. A basic operational system overview is described in this section. Detailed operational information is provided in Section 4.

The LPH system is located in the LAW Facility of the Hanford Tank Waste Treatment and Immobilization Plant (WTP). The interfacing LAW container receipt handling (LRH) system transfers empty containers to the container transfer corridor through two import hatches located at the west end of the corridor. The containers are placed on one of two transport bogies that operate along parallel rail lines running in the east-west direction. The bogies move the empty containers east to the pour caves where they are transferred to the container turntables via monorail hoists. The interfacing LAW melter process (LMP) system fills the containers with glass mixture and the containers are transferred back to the bogies where they continue to move east in the container transfer corridor. Once they arrive at the east end of the corridor, the filled containers are transferred to the LAW container finish handling (LFH) system by LRH hoists.

Figure 2-3 LPH System Functional Block Diagram

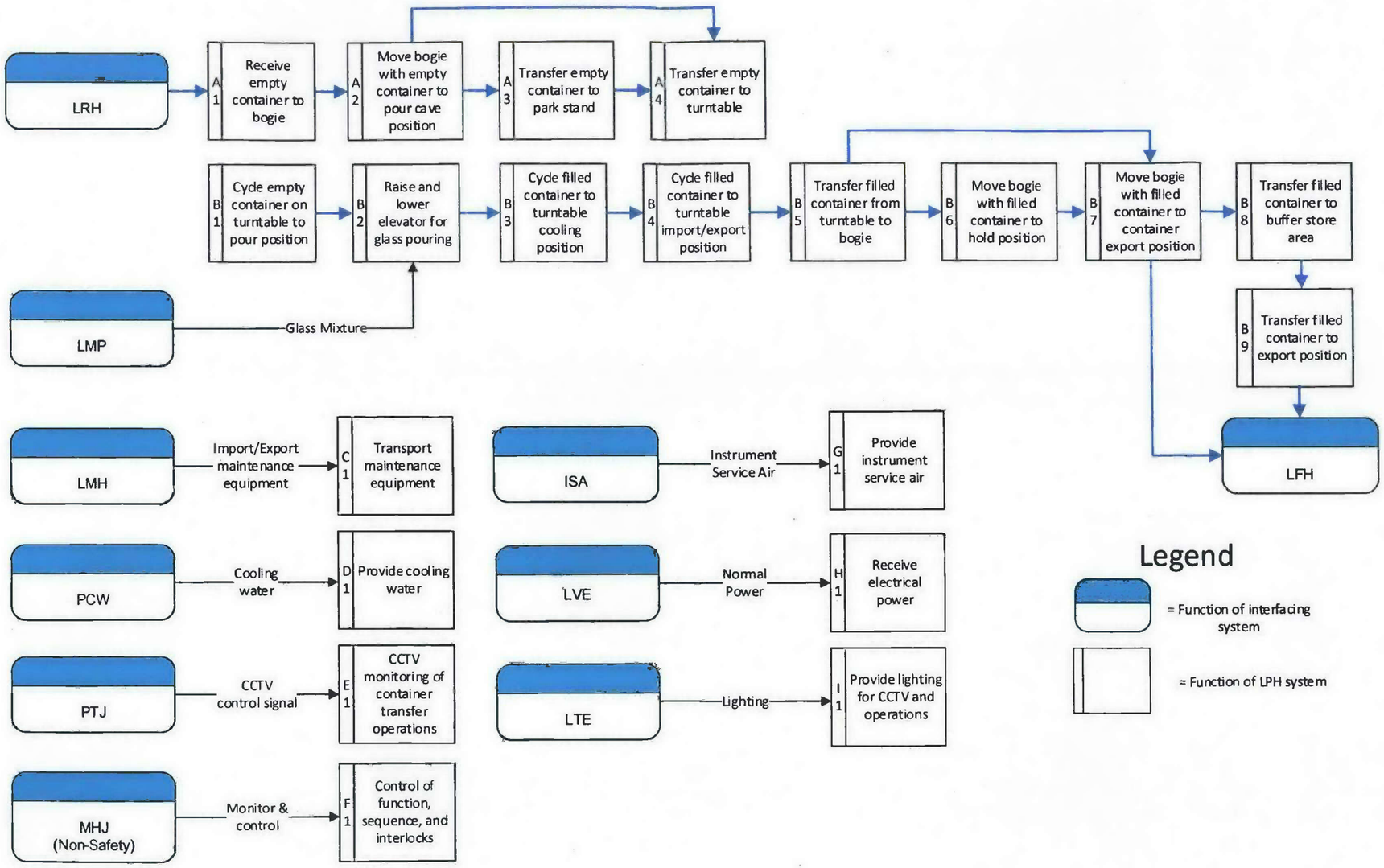

Table 2-1 Functional Analysis & Crosswalk to Requirements

Reference	Functional Analysis Description	Requirement Section No.
A.	**Container Import from LRH and Turntable Loading**	N/A
A.1	Receive empty container to bogie – empty containers are received from the LAW Receipt Handling (LRH) system through the container import hatches (LRH-HTCH-00001/00002) via the container import hoists (LRH-HST-00001/00002). The containers are placed on container transport bogies (LPH-TRLY-00001/00002) that are used to advance the containers through the container transfer corridor.	3.4.1.4
A.2	Move bogie with empty container to pour cave position – the container transport bogie delivers the empty container to a position adjacent to the container park stand (LPH-MHAN-00058/00059/00060/00061) located to the south of the container pour caves.	3.4.1.4
A.3	Transfer empty container to park stand – The operator uses the pour cave monorail hoist (LPH-HST-00001/00002/00003/00004) and its respective grapple (LPH-TOOL-00001/00002/00003/00004) to transfer the empty container from the container transport bogie to the container park stand.	3.4.1.4 3.5.1.2
A.4	Transfer empty container to turntable – The operator uses the pour cave monorail hoist and its respective grapple to transfer an empty container from the container park stand to the import/export position of the container turntable in the pour cave.	3.4.1.4 3.5.1.2
B.	**Turntable Cycling and Transfer of Container to LFH**	N/A
B.1	Cycle empty container on turntable to pour position – the container turntable rotary lock pin disengages and the container turntable rotates 120 degrees. The empty container previously located at the import/export position of the turntable moves to the pouring position.	3.4.1.4
B.2	Raise and lower elevator for glass pouring – the container elevator (LPH-ELEV-00001/00002/00003/00004) located at the container turntable pouring position raises the empty container to the melter pour seal head where it interfaces with system LMP to receive glass. Once the glass pour cycle is complete the elevator lowers the container back to the turntable.	3.4.1.4
B.3	Cycle filled container to turntable cooling position – to the container turntable rotary lock pin disengages and the turntable rotates 120 degrees. The filled container previously located at the pouring position moves to the cooling position of the turntable and remains there to provide initial container cooling.	3.4.1.4
B.4	Cycle filled container to turntable import/export position – once the container has cooled for a sufficient amount of time, the turntable rotary lock pin disengages and the container turntable rotates 120 degrees. The filled container previously located at the cooling position of the turntable moves to the import/export position.	3.4.1.4
B.5	Transfer filled container from turntable to bogie – The operator uses the pour cave monorail hoist and its respective grapple to transfer a filled and cooled container from the import/export position of the container turntable to the container transfer bogie in the container transfer corridor.	3.4.1.4 3.5.1.2
B.6	Move bogie with filled container to hold position – The container transport bogie moves a filled container from the pour cave to the bogie hold position where the bogie waits for buffer store and export operations to conclude before proceeded further down the transfer corridor.	3.4.1.4
B.7	Move bogie with filled container to container export position – The container transport bogie at the bogie hold position moves the filled container east in the transfer corridor until it reaches the container export position adjacent to the buffer store and container rework areas.	3.4.1.4
B.8	Transfer filled container to buffer store area – if system LFH is not ready to accept a filled container or the container is out-of-specification, the operator uses the buffer store crane (LPH-CRN-00002) to transfer the container from the container transport bogie at the container export position to the buffer store area.	3.4.1.4 3.5.1.2

Reference	Functional Analysis Description	Requirement Section No.
B.9	Transfer filled container to export position – if system LFH is ready to accept a filled container and there are no bogies present at the hold position, the operator uses the buffer store crane to transfer a container from the buffer store area to the container export stand (LPH-MHAN-00019/00020).	3.4.1.4 3.5.1.2
C.	**Equipment removal/import and transport from LMH**	N/A
C.1	Transport maintenance equipment – equipment imported/exported from/to system LMH is moved to the pour caves via the pour cave monorail hoist and moved to the buffer store area via the container transport bogies.	3.5.1.2
D.	**Receive Plant Cooling Water**	N/A
D.1	Provide cooling water – system PCW provides water to the cooling jacket located on the container turntable near the concrete floor, as well as the pour cave cooling panels. The cooling jacket and panels remove heat from the pour cave to protect LPH equipment.	3.11.3.1
E.	**Remote Viewing**	N/A
E.1	CCTV monitoring of container transfer operations –PTJ system provides monitoring of all LPH container transfer operations through CCTV cameras.	3.4.4.5 3.4.4.6
F.	**Mechanical Handling Monitoring and Control**	N/A
F.1	Control of function, sequence, and interlocks –The MHJ system provides non-safety monitoring and control functions for LPH operations.	3.10.1.1
G.	**Receive Instrument Service Air**	N/A
G.1	Provide instrument service air – system ISA supplies air to the buffer store crane to cool the crane mounted cameras and the laser positioning device, as well as to PTJ cameras located in the container transfer corridor and equipment maintenance areas.	3.11.3.2
H.	**Electrical Power**	N/A
H.1	Receive electrical power – system LVE provides power to the LPH equipment.	N/A
I.	**Lighting**	N/A
I.1	Provide lighting for CCTV and operations – system LTE provides lighting to LPH areas to support monitoring of container operations.	3.5.4.1

3 Design Requirements

3.1 Requirements

Requirements are documented in Section 3.4 through Section 3.11. Each requirement statement is accompanied by a basis discussion (as needed) and the expected means of verification. Requirements must be met in design. If a requirement stated in this document cannot be met in design, a revision to the requirement needs to be pursued, if possible, or the design must be changed to meet the requirement. Requirements preceded by "**[HOLD]**" may only be used in support of preliminary or committed design, which shall also be issued with appropriate holds per procedure 24590-WTP-3DP-G04B-00046, *Engineering Drawings*. These requirements may not be used in support of fabrication or construction.

The following abbreviations are used to designate the selected method for verification (see 24590-WTP-GPG-ENG-0161, *Technical Requirements Management*, for additional guidance concerning methods of verification):

(I) Inspection
(A) Analysis
(D) Demonstration
(T) Test

The following abbreviations are used to designate the organization responsible for performing the verification:

(ENG) Engineering
(CON) Construction
(SU) Startup
(COM) Commissioning
(SUP) Supplier
(SUB) Subcontractor
(SQR) Supplier Quality Representative
(REC) Receiving

3.2 Bases

Basis discussions are provided as needed to explain the decomposition or interpretation from the originating source requirement(s). Where a [**HOLD**] has been applied to a requirement, this section will include the basis for the "HOLD".

3.3 References

The requirements include a source document reference and a requirement object identification number (ROIN) included in brackets following the requirement statement. Each unique source document reference, with ROIN number(s), is bracketed separately. Requirements may include a reference to Section 2.2, Functional Description, listed in parentheses following the source document and ROIN number references. A complete listing of all source references is provided in Section 5.1.

3.4 General Requirements

3.4.1 Mission and Functional / Performance Requirements (Including States/Modes)

3.4.1.1 LPH Production Rates

Requirement: The LPH system shall be designed to support LAW facility design capacity of 30 MTG/day and treatment capacity of 21 MTG/day (which is an availability of 70% multiplied by design capacity). This equates to a normal production rate of five (5) ILAW packages/day. [Section 6.3.2, BOD, ROIN: 1-40495] [Section 1.4.2, ICD 15, ROIN: 1-26749] [Section C.7(b)(2), WTP Contract, ROIN: 1-25955]

Basis Discussion: The LPH system works in conjunction with other LAW systems to support a 30 MTG/day design production rate with availability of 70% (21 MTG/day). Each container contains 6 MTG which leads to a throughput capacity of 5 containers per day at 100% availability.

Verification: Verification is expected to be achieved through the following:

Verif. Method	Verif. By	Plan	Notes/Comments
A	ENG	Perform an analysis to verify that LPH system will support the production rate of 30 MTG/day and availability of 70% (21 MTG/day).	
I	ENG	Review of design to verify conformance to throughput analysis requirement.	

3.4.1.2 Design Life

Requirement: Non-replaceable, permanent LPH system plant equipment shall be designed for a minimum design life of 40 years, inclusive of maintenance. All non-maintainable items of LPH system equipment shall be designed to last the life of the facility (40 years). Design life of equipment shall consider the effects of chemical, radiological and thermal exposure. [Sections 11.1.1, 11.7.4, BOD, ROIN: 1-41120, ROIN: 1-41121B, ROIN: 1-41210].

Basis Discussion: Equipment and material selection is based on proven performance, value engineering principles, and fit-for-function principles. The selection of equipment and materials is further addressed in detail as the design progresses. Equipment design needs to consider the routine environmental exposures under normal operations for non-safety equipment; this minimizes the need for equipment maintenance, exposure, and radiological waste generation in radiological areas. [ALARA]

Verification: Verification is expected to be achieved through the following:

Verif. Method	Verif. By	Plan	Notes/Comments
I	ENG	Review design to verify design life of non-replaceable, non-maintainable SSCs is documented in procurement documents and supported by supplier certificates of conformance.	May be documented in an assessment/evaluation.

3.4.1.3 Seismic Design for Interaction Effects

Requirement: Interaction effects shall be considered when determining the seismic category of individual items and, where an adverse seismic interaction with SC or SS equipment exists, adequate measures shall be taken to preclude the adverse interaction. [Section 10.2.15, BOD, ROIN: 45-21847].

Basis Discussion: All SSCs in system LPH are non-safety, seismic category SC-IV. Equipment that is non-safety may be identified as having a potential for adverse interaction with safety equipment during a seismic event in accordance with 24590-WTP-GPG-ENG-033, *Evaluation for Seismic Interaction Effects*. Where a resolution strategy is selected to increase the seismic category of the source SSC to protect the safety (target) SSC, the resulting seismic category of the equipment may be greater than SC-IV. In those cases, the equipment design should be verified to meet the higher seismic performance category such that the target SSC is protected.

Verification: Verification is expected to be achieved through the following:

Verif. Method	Verif. By	Plan	Notes/Comments
I	ENG	Perform an evaluation of the LAW Facility LPH system to verify seismic categorization of equipment based on interaction effects per 24590-WTP-GPG-ENG-033 and devise a control strategy for all open interactions.	
A/T	ENG/SUP	Analysis or testing performed on SSCs to demonstrate the ability to withstand the seismic loadings for their respective seismic categories to the extent necessary to prevent interactions.	May be documented in an Equipment Seismic Qualification (ESQ) Review Form or supplier seismic design report.

3.4.1.4 Container Transfers

Requirement: The LPH system shall provide the capability to perform the following container transfers: (A.1, A.2, A.3, A.4) (B.1, B.2, B.3, B.4, B.5, B.6, B.7, B.8, B.9)

- Receive empty container on the transport bogie (A.1)
- Move empty container to the pour cave position (A.2)
- Transfer empty container from bogie to container park stand (A.3)
- Transfer empty container from container park stand to import/export position of turntable (A.4)
- Cycle empty container on turntable to pour position (B.1)
- Raise and lower container on elevator to/from melter seal pour head (B.2)
- Cycle filled container on turntable to turntable cooling position (B.3)
- Cycle filled container on turntable to turntable import/export position (B.4)
- Transfer filled container from import/export position of turntable to transport bogie (B.5)
- Move filled container on bogie to bogie hold position (B.6)
- Move filled container on bogie from bogie hold position to container export position (B.7)
- Transfer filled container to Buffer Store Area (B.8)
- Transfer filled container to export stand (B.9)

Basis Discussion: The listed container transfers are performed by LPH equipment.

Verification: Verification is expected to be achieved through the following:

Verif. Method	Verif. By	Plan	Notes/Comments
I	ENG	Review the design to verify the capability to perform the listed container transfers.	
D	SU/COM	Demonstrate the ability to transfer and transport the container.	

3.4.1.5 Container Temperature Measurement

Requirement: Temperature measurement capabilities (ambient and container surface) shall be provided to verify the container environment is being controlled. [Section 14.12, ORD, ROIN: 8-4335]

Basis Discussion: The temperature of ILAW package containers is measured to ensure they pass the equivalent criteria to maintain an acceptable finishing line exhaust temperature, as stated in calculation 24590-LAW-M4C-C5V-00001, *CFD Analysis of LAW Pour Caves (With Additional Cooling) and Finishing Lines*. The package exterior temperature is not to exceed 465 °F for alternating pours or 550 °F for single pours. Ambient temperatures are measured by instruments in C5V.

Verification: Verification is expected to be achieved through the following:

Verif. Method	Verif. By	Plan	Notes/Comments
I	ENG	Review the design to verify the capability to measure the temperature of ILAW package containers.	
D	SU/COM	Demonstrate the ability to measure the temperature of ILAW package containers.	

3.4.2 Nuclear Safety, ALARA, Environmental, and Other Regulatory Requirements

All SSCs in system LPH are non-safety.

3.4.2.1 Room Environment Conditions for Structures, Systems, or Components

Requirement: The LAW Facility LPH system equipment and components shall be designed to operate and withstand the internal environment conditions of the LAW Facility. [Sections 11.16, 16.1, ORD, ROIN: 14-1248E, ROIN: 8-7000].

Basis Discussion: SSCs are designed to function as intended in the room environment conditions associated with their location. [ALARA]

Verification: Verification is expected to be achieved through the following:

Verif. Method	Verif. By	Plan	Notes/Comments
A	ENG	Perform an analysis to determine the internal environment temperatures of the rooms containing LPH equipment and components.	
I	ENG	Review the design of LPH equipment and components to verify that they are able to operate and withstand the internal environment conditions associated with their locations.	

3.4.2.2 Fire Barrier

Requirement: LPH equipment shall be designed with materials and methods of construction that do not reduce the required fire-resistance rating of the barrier they penetrate, as required by IBC 2000 and DOE-STD-1066-97. [Section 10.3.4.7, BOD, ROIN: 1-41107]

Basis Discussion: Fire barrier drawings which include barriers related to LPH are the following:

- 24590-LAW-U1-60-00001, *LAW VITRIFICATION BUILDING FIRE BARRIER DRAWING PLAN AT EL (-)21' 0"*
- 24590-LAW-U1-60-00002, *LAW VITRIFICATION BUILDING FIRE BARRIER DRAWING PLAN AT EL 0' 0" & 3' 0"*

Verification: Verification is expected to be achieved through the following:

Verif. Method	Verif. By	Plan	Notes/Comments
I	ENG	Verify all components that penetrate a fire barrier are tested to not less than the required fire resistance rating of the barrier based on the fire exposure and acceptance criteria specified in ASTM E 119. Use of alternative methods for determining fire resistance shall be approved by building official.	May be documented in an evaluation/assessment. Assessment to be submitted to the building official for approval. Testing to ASTM E 119 is invoked by IBC 2000 and DOE-STD-1066-97.

3.4.3 System Interface Requirements

None

3.4.4 Other Technical, Specialty, Operations and Maintenance Requirements

3.4.4.1 Decontamination

Requirement: The LAW Facility LPH system equipment and shield doors subject to decontamination shall be designed to withstand this process without any reduction of functionality through degradation of the electrical, mechanical, or any other components involved. [Sections 7.1, 9.1, 14.16, ORD, ROIN: 8-488, ROIN: 8-8065, ROIN: 8-475] [Section 11.8.3.2, BOD, ROIN: 2-43173].

Basis Discussion: Equipment operating in a contaminated environment is monitored and, if necessary, decontaminated before maintenance. The specifications convey that the equipment design accounts for these processes. LPH equipment subject to decontamination includes:

- Container Transport Bogies
- Pour Cave Monorail Hoists
- Bogie Maintenance Hoist
- Buffer Store & Buffer Store Maintenance Cranes
- Container Elevators & Turntables

The LAW Facility is a hands-on maintenance facility and cranes and hoists are decontaminated using local decontamination methods such as wipes, strippable coating, and tack cloths in lieu of gross decontamination methods (e.g., steam, warm water, detergent solutions). [ALARA]

Verification: Verification is expected to be achieved through the following:

Verif. Method	Verif. By	Plan	Notes/Comments
I	ENG	Review the design to verify LPH equipment and shield doors subject to decontamination facilitate local decontamination methods.	May be documented in an evaluation/assessment.

Verif. Method	Verif. By	Plan	Notes/Comments
I	ENG	Review the LPH design to verify equipment and shield doors subject to decontamination can withstand local decontamination methods without degradation or reduction in equipment functionality.	
A	ENG	Review shield door design, and facility architectural room finish schedules, to verify coatings applied to shield door panels are, at a minimum, equivalent to those specified for the room that houses the door panel.	Document in an evaluation/assessment. (See 24590-WTP-3PS-AFPS-T0001, Appendix D, Note 1. Stainless steel cladding exceeds all coating systems)

3.4.4.2 Equipment/Component Maintenance and Replacement

Requirement: Maintainable or replaceable LPH equipment and components shall be designed for transport from their installed location to their dedicated maintenance areas and back. [Sections 7.1, 8.1.3, 9.1, 14.1, 14.16, ORD, ROIN: 8-3582, ROIN: 1-39963, ROIN: 1-39969, ROIN: 8-4350, ROIN: 8-3584, ROIN: 8-472, ROIN: 8-481] [Sections 11.3.2.2, 11.4.1, 11.8.3.2, BOD, ROIN: 1-41136, ROIN: 1-41151, ROIN: 2-43170]

Basis Discussion: LPH equipment and components within a high radiation area that could fail during operations are designed for either safe recovery or replacement during worst-case credible failure, or redundancy. Handling features help to facilitate interfacing with equipment or components when using remote handling equipment. The following LPH equipment and their associated components are designed to be replaceable and maintainable: [ALARA]

- Buffer Store Crane (LPH-CRN-00002)
- Pour Cave Monorail Hoists (LPH-HST-00001/00002/00003/00004)
- Product Container Grapples (LPH-TOOL-00001/00002/00003/00004)
- Container Transport Bogies (LPH-TRLY-00001/00002)
- Container Turntable (LPH-TTBL-00001/00002/00003/00004)
- Container Elevator (LPH-ELEV-00001/00002/00003/00004)
- Master Slave Manipulators (installed on as-needed basis)

Verification: Verification is expected to be achieved through the following:

Verif. Method	Verif. By	Plan	Notes/Comments
I	ENG	Review of design to verify LPH equipment and components are maintainable, replaceable, and are designed for transport to/from their dedicated maintenance areas.	May be documented in an evaluation/assessment.

3.4.4.3 Buffer Store and Rework Areas

Requirement: LPH design shall include Buffer Store and Container Rework Areas for over-packing and addressing out-of-specification glass or containers. [Section 14.12, ORD, ROIN: 1-40077]

Basis Discussion: The Buffer Store Area (L-B025C) is located to the north of the Container Transfer Corridor (L-B025B) and provides storage for up to 12 filled containers. The Container Rework Area (L-B025D) is located to

the south of the Container Transfer Corridor and provides space for addressing out-of-specification glass or containers.

Verification: Verification is expected to be achieved through the following:

Verif. Method	Verif. By	Plan	Notes/Comments
I	ENG	Review design to verify inclusion of Buffer Store and Container Rework Areas.	

3.4.4.4 Out-Cave Equipment Location

Requirement: Maintainable equipment components shall be located out of high radiation cave areas to the extent possible. [Section 7.1, ORD, ROIN: 9-58] [Sections 11.4.1, 11.8.3.2, BOD, ROIN: 1-41149, ROIN: 1-41216]

Basis Discussion: Motor drives and valve power actuators should be operated through the cave wall and be maintained external to the cave. [ALARA]

Verification: Verification is expected to be achieved through the following:

Verif. Method	Verif. By	Plan	Notes/Comments
I	ENG	Review design to verify maintainable equipment components are located out of the LPH Pour Caves.	

3.4.4.5 Viewing Operations

Requirement: Cameras and/or shield windows shall be provided for remote viewing of LPH mechanical handling equipment requiring remote operation. [Sections 11.5, 12.4, 14.16, ORD, ROIN: 8-9102, ROIN: 1-40045, ROIN: 8-14259, ROIN: 8-14261, ROIN: 8-14262, ROIN: 8-468, ROIN: 8-14269] [Sections 7.2.5, 9.3, BOD, ROIN: 1-40642, ROIN: 1-40904, ROIN: 1-40905, ROIN: 1-40906] (E.1)

Basis Discussion: Cameras and/or shield windows for viewing operations are located to provide optimum viewing angles and distance to suit the operations. CCTV monitoring is provided adjacent to or integrated with remote operator interfaces in the control rooms and local operator interfaces when operations are not visible. [ALARA]

Verification: Verification is expected to be achieved through the following:

Verif. Method	Verif. By	Plan	Notes/Comments
I	ENG	Review design to verify cameras and/or shield windows are provided for viewing of remotely operated LPH equipment.	
D	SU/COM	Demonstrate cameras and/or shield windows provide adequate viewing to perform required remote LPH mechanical handling operations.	May be demonstrated as part of the verification demonstration for remote operation of LPH equipment.

3.4.4.6 Remote Operation

Requirement: LPH mechanical handling equipment requiring remote operation, including cranes and hoists, shall be operated from remote operator interfaces using CCTV monitors or through shield windows by direct observation. [Sections 11.5, 12.4, 14.16, ORD, ROIN: 8-9102, ROIN: 1-40045, ROIN: 8-14259, ROIN: 8-468, ROIN: 8-14269] [Sections 7.2.5, 9.3, BOD, ROIN: 1-40642, ROIN: 1-40904, ROIN: 1-40905, ROIN: 1-40906] (E.1)

Basis Discussion: Cranes and hoists in maintenance areas are not required to be operated remotely. [ALARA]

Verification: Verification is expected to be achieved through the following:

Verif. Method	Verif. By	Plan	Notes/Comments
I	ENG	Review design to verify remotely operated LPH equipment can be operated from various remote operator interfaces using CCTV monitors and/or shield windows.	
D	SU/COM	Demonstrate operation of remotely operated LPH equipment from remote operator interfaces using CCTV monitors and/or shield windows.	Physical demonstration

3.5 Crane and Hoist Requirements

3.5.1 Mission and Functional / Performance Requirements (Including States/Modes)

3.5.1.1 Codes and Standards

Requirement: The following cranes and hoists shall be designed per the applicable codes and standards: [Sections 11.1.2, 11.8.1, BOD, ROIN: 40-10531, ROIN: 8-8061]

Table 3-1 Applicable Codes and Standards for LPH Cranes and Hoists

Crane/Hoist	Applicable Codes and Standards
Buffer Store Crane	CMAA 70
Buffer Store Maintenance Facility Crane	CMAA 74
Pour Cave Monorail Hoists	ASME B30.11
Bogie Maintenance Hoist	ASME B30.16

Basis Discussion: None.

Verification: Verification is expected to be achieved through the following:

Verif. Method	Verif. By	Plan	Notes/Comments
I	ENG	Review design of LPH cranes to verify adherence to applicable codes and standards.	May be documented in an evaluation/assessment

3.5.1.2 Lifting Capacity

Requirement: System LPH cranes and hoists shall be designed with sufficient capacity to lift the following equipment/components, in conjunction with applicable lifting beams or apparatus: (A.3, A.4) (B.5, B.8, B.9) (C.1)

- Pour Cave Monorail Hoist
  - Empty or filled ILAW Product Container (with Lower Overpack)
  - Container Turntable components
  - Pour Cave Elevator platform
  - Maintenance equipment to/from system LMH
- Buffer Store Crane
  - Filled ILAW Product Container
- Bogie Maintenance Hoist
  - Container Transport Bogie (without ILAW Product Container)
- Buffer Store Maintenance Facility Crane
  - Buffer Store Crane components

Basis Discussion: None.

Verification: Verification is expected to be achieved through the following:

Verif. Method	Verif. By	Plan	Notes/Comments
I	ENG	Review crane, hoist, and lifting device design to verify capability of lifting all hoisted equipment.	May be documented in an evaluation/assessment.

3.5.1.3 Design for Modular Construction

Requirement: System LPH cranes, hoists, and crane cable reels shall include modular, separable components for ease of maintenance/replacement. Modules shall have quick connectors to allow rapid reconnection of cabling or other services. [Section 7.4, 14.16 ORD, ROIN: 8-493, ROIN: 8-469, ROIN: 1-39957, ROIN: 1-40089] [Section 11.8.3.2, BOD, ROIN: 2-43170].

Basis Discussion: Motors, gear reducers, and wheel bearings subject to failure are located and mounted such that they can be replaced by one or two personnel working from the bridge, trolley, scissors lift, or scaffolding using an overhead maintenance crane as necessary. This is to be done by minimizing shimming for alignment of motors and gearboxes. This may consist of the following components: [ALARA]

- Wheel assemblies
- Hoist gearboxes, motors, and brakes
- Trolley gearboxes, motors, and brakes
- Bridge gearboxes, motors, and brakes
- Cable reel enclosure and cassette

Verification: Verification is expected to be achieved through the following:

Verif. Method	Verif. By	Plan	Notes/Comments
I	ENG	Review equipment design to verify the use of modular components.	May be documented in an evaluation/assessment. Plant Engineering to participate in or review the evaluation/assessment.

3.5.1.4 Materials of Construction

Requirement: Cranes, hoists and rails shall be of carbon steel construction. [Section 11.8.3.2, BOD, ROIN: 2-43170].

Basis Discussion: None.

Verification: Verification is expected to be achieved through the following:

Verif. Method	Verif. By	Plan	Notes/Comments
I	ENG	Review design of cranes and hoists to verify carbon steel construction.	

3.5.1.5 Brakes

Requirement: Brakes on hoists and all crane drive functions shall be designed to set when power is off. [Section 14.16, ORD, ROIN: 8-478] [Section 11.8.3.2, BOD, ROIN: 2-43174].

Basis Discussion: To prevent the cranes from traveling and the hoist from raising or lowering when not in operation, the brakes on all drive functions are set when the power is off.

Verification: Verification is expected to be achieved through the following:

Verif. Method	Verif. By	Plan	Notes/Comments
I	ENG	Review design to verify brakes are set when crane and hoist power is off	
D	SU/COM	Demonstrate that all crane and hoist brakes are set when power is off.	

3.5.1.6 Crane Support for Equipment Transfer

Requirement: LPH cranes and hoists shall be designed to support the removal and replacement of equipment. [Section 20, ORD, ROIN: 8-4687] (C.1)

Basis Discussion: The source requirements do not address in detail the removal and replacement of failed equipment by the LPH system. The specific procedures for these derived tasks are developed and managed by the plant operations team.

Verification: Verification is expected to be achieved through the following:

Verif. Method	Verif. By	Plan	Notes/Comments
D	SU/COM	Demonstrate that designated cranes/hoists can support the removal and replacement of the required equipment.	

3.5.2 Nuclear Safety, ALARA, Environmental, and Other Regulatory Requirements

None

3.5.3 System Interface Requirements

None

3.5.4 Other Technical, Specialty, Operations and Maintenance Requirements

3.5.4.1 Lighting

Requirement: Lights shall be mounted on cranes and hoists to aid in illumination of the working area below (except on single girder cranes with adequate lighting). [Section 14.16, ORD, ROIN: 8-479] [Sections 8.6.1.1, 8.6.1.3, 11.8.3.2, BOD, ROIN: 1-40822, ROIN: 1-40829, ROIN: 2-43174] (I.1)

Basis Discussion: Adequate lighting complies with the requirements of Illuminating Engineering Society of North America (IESNA) Standard RP-7.

Verification: Verification is expected to be achieved through the following:

Verif. Method	Verif. By	Plan	Notes/Comments
I	ENG	Review design documentation to verify lights are mounted on cranes and adequate lighting is provided.	
T	SU/COM	Measure illumination levels below the cranes to verify lighting complies with IESNA Standard RP-7	

3.5.4.2 Lubrication Systems

Requirement: Cranes and hoist systems shall be designed with accessible lubrication systems. [Section 14.16, ORD, ROIN: 8-486] [Section 11.8.3.2, BOD, ROIN: 2-43174].

Basis Discussion: The lubrication systems on crane and hoist systems are accessible to personnel for ease of maintenance. [ALARA]

Verification: Verification is expected to be achieved through the following:

Verif. Method	Verif. By	Plan	Notes/Comments
I	ENG	Review crane and hoist design to verify incorporation of accessible lubrication systems.	

3.5.4.3 Maintenance Crane Interference

Requirement: The Buffer Store Maintenance Facility Crane shall be designed and installed such that it does not interfere with normal operations of the Buffer Store Crane. [Section 14.16, ORD, ROIN: 8-471] [Section 11.8.3.2, BOD, ROIN: 2-43171].

Basis Discussion: None.

Verification: Verification is expected to be achieved through the following:

Verif. Method	Verif. By	Plan	Notes/Comments
I	ENG	Review design to verify maintenance crane will not interfere with normal process crane operations.	

3.6 Bogie Requirements

3.6.1 Mission and Functional / Performance Requirements (Including States/Modes)

3.6.1.1 Design for Modular Construction

Requirement: Bogies shall include modular, separable components for ease of maintenance/replacement. [Section 11.8.3.2, BOD, ROIN: 2-43175][Sections 7.1, 7.4, ORD, ROIN: 8-6578, ROIN: 8-493, ROIN: 1-39957].

Basis Discussion: Motors, gear reducers, and wheel bearings subject to failure are located and mounted such that they can be replaced by one or two personnel using an overhead maintenance crane as necessary. This is to be done by minimizing shimming and alignment of motors and gear boxes. This may consist of the following components: [ALARA]

- Wheel assemblies
- Gear boxes, motors, and brakes

Verification: Verification is expected to be achieved through the following:

Verif. Method	Verif. By	Plan	Notes/Comments
I	ENG	Review bogie design to verify the use of modular components.	May be documented in an evaluation/assessment. Plant Engineering to participate in or review the evaluation/assessment.

3.6.1.2 Materials of Construction

Requirement: Bogies shall not contact the ILAW product containers with any material other than stainless steel. [Section 11.8.3.2, BOD, ROIN: 2-43175].

Basis Discussion: The remaining LPH bogie components may be of carbon steel construction. Placing stainless steel containers onto carbon steel surfaces could result in the deposit of carbon in the stainless steel components.

The carbon steel components shall have special protective coatings applied for ease of decontamination. [ALARA]

Verification: Verification is expected to be achieved through the following:

Verif. Method	Verif. By	Plan	Notes/Comments
I	ENG	Review design of all portions of the bogie or container guides that may contact an ILAW product container to ensure material used is stainless steel.	

3.6.2 Nuclear Safety, ALARA, Environmental, and Other Regulatory Requirements

None

3.6.3 System Interface Requirements

None

3.6.4 Other Technical, Specialty, Operations and Maintenance Requirements

None

3.7 Grapple Requirements

All LAW grapples are of the same design for consistency and interchangeability. Reference 24590-LAW-3ZD-LRH-00001, *LAW Container Receipt Handling (LRH) System Design Description*, for general container grapple design requirements.

Grapple CTNs: 24590-LAW-FH-LPH-TOOL-00001/00002/00003/00004/00007

3.8 Master-Slave Manipulator Requirements

3.8.1 Mission and Functional / Performance Requirements (Including States/Modes)

3.8.1.1 Master Slave Manipulator Operations

Requirement: The LPH Pour Caves and Container Rework Area shall incorporate Master Slave Manipulators (MSMs) designed and located to assist in container handling and in-cave recovery operations. The entire operating area for manipulators in the X-Y-Z dimensions shall be designed with no obstructions adjacent to the shield window station from which they are operated. [Sections 11.4.1, 11.4.5, BOD, ROIN: 1-41155, ROIN: 8-6553] [Section 9.2, ORD, ROIN: 1-39982B]

Basis Discussion: In-cave recovery operations are accomplished with through-wall manipulators. MSMs provide remote manipulation of tools and equipment at cave face shield window stations. The following functions are provided by LPH pour cave manipulators: [ALARA]

- Remove glass chips that have hardened on the outer surfaces of the container
- Perform override to release the grapple from a container should the sequencing mechanism fail to retract the jaws

Verification: Verification is expected to be achieved through the following:

Verif. Method	Verif. By	Plan	Notes/Comments
I	ENG	Review the design to confirm that the MSMs may be located to assist in container handling and recovery operations.	
D	SU/COM	Demonstrate that the manipulators assist in recovery functions for LPH. Assistance may be provided by in-cave hoists or other manipulators.	

3.8.1.2 MSM Removal and Replacement

Requirement: Master-slave manipulator slave arms shall be designed to allow for removal and transport to decontamination/maintenance areas and placement in a storage area for future repair/replacement. [Sections 9.2, 10.5, ORD, ROIN: 8-9095A, ROIN: 8-9095B, ROIN: 1-39982A].

Basis Discussion: In case of failure, the manipulators need to be removable and replaceable.

Verification: Verification is expected to be achieved through the following:

Verif. Method	Verif. By	Plan	Notes/Comments
I	ENG	Review design and installation to verify the ability to remove and replace the MSMs. Inspect installation to verify that reserved pull-space is adequate and no interferences prevent accessibility for MSM removal/replacement.	
D	SU/COM	Demonstrate MSM removal and replacement	

3.8.2 Nuclear Safety, ALARA, Environmental, and Other Regulatory Requirements

None

3.8.3 System Interface Requirements

None

3.8.4 Other Technical, Specialty, Operations and Maintenance Requirements

None

3.9 Shield Door and Hatch Requirements

3.9.1 Mission and Functional / Performance Requirements (Including States/Modes)

3.9.1.1 Shield Door Design

Requirement: The shield door design shall permit simultaneous control of contamination and routing of breathing air hoses without pinching. [Sections 7.1, 14.6, ORD, ROIN: 8-1263, ROIN: 8-1273]

Basis Discussion: None.

Verification: Verification is expected to be achieved through the following:

Verif. Method	Verif. By	Plan	Notes/Comments
I	ENG	Review design to verify shield door assembly permits simultaneous contamination control and breathing air hose routing.	

3.9.1.2 Shield Door Engineered Air Gap

Requirement: Shield doors and hatches shall utilize an airtight seal or engineered air gap which, in conjunction with the facility ventilation system, maintains an air cascade with a minimum perimeter airflow velocity of 200 feet per minute. [Section 7.1, ORD, ROIN: 8-489][Sections 5.1.2, 11.8.3.2, 12.3.2, BOD, ROIN: 1-40441, ROIN: 2-43176, ROIN: 8-15078].

Basis Discussion: Airtight seals or an engineered air gap helps to control the spread of contamination and to maintain the cascading airflow from areas of low contamination to areas of higher contamination. This is exclusive of Buffer Store and Container Rework shield doors (LPH-DOOR-00024/00026). [ALARA]

Verification: Verification is expected to be achieved through the following:

Verif. Method	Verif. By	Plan	Notes/Comments
A	ENG	Perform an analysis to determine air gap value(s) necessary to achieve 200 feet/minute airflow velocity around shield door perimeters	
I	SUP/ENG	Review the door design to verify conformance to airtight seals or engineered air gap requirements.	May be documented in Factory Acceptance Test Report.
I	CON	Inspect installation design to verify conformance to engineered air gap requirements.	

3.9.1.3 Shielded Personnel Access Doors (SPADs)

Requirement: Shielded Personnel Access Doors (SPADs) shall be designed with airtight seals. [Section 11.8.3.2, BOD, ROIN: 2-43176] [Section 7.1, ORD, ROIN: 8-489].

Basis Discussion: The shield doors maintain confinement of the C5V boundary by ensuring that, when the doors are closed, they seal to restrict air from leaking out of the airlocks. The following LPH SPADs are designed with airtight seals: [ALARA]

- 24590-LAW-AD-LPH-DOOR-00001
- 24590-LAW-AD-LPH-DOOR-00002
- 24590-LAW-AD-LPH-DOOR-00003
- 24590-LAW-AD-LPH-DOOR-00004

Verification: Verification is expected to be achieved through the following:

Verif. Method	Verif. By	Plan	Notes/Comments
I	ENG	Review of shield door design to verify airtight seals.	
I	CON	Inspect installation design to verify conformance to the above requirement.	

3.9.2 Nuclear Safety, ALARA, Environmental, and Other Regulatory Requirements

3.9.2.1 Ease of Decontamination

Requirement: Shield doors shall be of carbon steel design with a surface that is easily decontaminated. [Section 7.1, ORD, ROIN: 8-488][Section 11.8.3.2, BOD, ROIN: 2-43176].

Basis Discussion: Door decontamination is performed using the same methods/agents used on the surrounding room. [ALARA]

Verification: Verification is expected to be achieved through the following:

Verif. Method	Verif. By	Plan	Notes/Comments
I	ENG	Review shield door design to verify materials or coatings applied facilitate decontamination.	May be documented in an evaluation/assessment.

3.9.3 System Interface Requirements

None

3.9.4 Other Technical, Specialty, Operations and Maintenance Requirements

3.9.4.1 Fail in Place

Requirement: LPH shield doors shall fail safe by remaining in place on loss of power or control signals. [Sections 11.4.1, 11.8.3.2, BOD, ROIN: 1-41151, ROIN: 1-41152, ROIN: 2-43176]

Basis Discussion: This is exclusive of LPH SPADs (LPH-DOOR-00001/00002/00003/00004).

Verification: Verification is expected to be achieved through the following:

Verif. Method	Verif. By	Plan	Notes/Comments
I	ENG	Review of design to verify doors remain in place on loss of power.	May be documented in an evaluation/assessment
D	SUP/SU/ COM	Demonstrate doors remain in place on loss of power	

3.10 Monitoring and Controls Requirements

3.10.1 Mission and Functional / Performance Requirements (Including States/Modes)

3.10.1.1 Mechanical Handling Control System

Requirement: LPH mechanical handling equipment requiring remote control shall be controlled and monitored through the MHJ. [Section 9.6.2, BOD, ROIN: 8-15066] (F.1)

Basis Discussion: The MHJ system utilizes a number of operator interfaces for Facility Control Room (FCR) control, cave face control, or local control, and provides the following functions for LPH where appropriate:

- Sequence control of discrete mechanical handling equipment
- Device interlocks
- Control of process functions integral to the mechanical handling system
- Control of package-supplied equipment

Equipment located in normally accessible locations (C1/R1 to C3/R3 areas), which require remote (MHJ) control also has the ability to be controlled locally. Some equipment located in normally accessible locations may not have any connection to the MHJ and is only operated directly in a local mode.

Verification: Verification is expected to be achieved through the following:

Verif. Method	Verif. By	Plan	Notes/Comments
I	ENG	Review the LPH design to verify equipment requiring remote control is controlled through the MHJ.	
D	SU/COM	Demonstrate equipment control using the MHJ.	

3.10.1.2 Level of Automation

Requirement: Mechanical handling operations requiring remote control will be controlled through the MHJ using manual control to the extent practical. Automatic control will be used for repetitive sequences, or where operating complexity or even timing requirements preclude manual operation. Automatic control for repetitive sequences shall utilize operator-initiated sequence control, where practical and safe, up to critical steps requiring operator decision or verification. Sequences shall also be capable of stepping through each step, provided that doing so does not create safety hazards. Manual mode will be provided for equipment operated in automatic mode to enable equipment operation outside of automatic mode. [Sections 7.1, 7.1.1, 7.3.5.1, 7.3.5.2, BOD, ROIN: 1-40611, ROIN: 1-40618, ROIN: 1-40652, ROIN: 1-40655] [Sections 11.10, 11.12.3, 11.12.3.1, 11.12.3.2, 11.12.3.4, 14.1, ORD, ROIN: 8-6071, ROIN: 8-8276, ROIN: 1-40006, ROIN: 8-8289, ROIN: 1-40008, ROIN: 40010, ROIN: 8-3586]

Basis Discussion: Operation of equipment requiring remote control through the MHJ is operated in manual mode to the extent possible to reduce the need for high maintenance on automated equipment.

Verification: Verification is expected to be achieved through the following:

Verif. Method	Verif. By	Plan	Notes/Comments
I	ENG	Review LPH design to verify automation of repetitive sequences using sequence control and inclusion of manual mode for device operation outside of automatic mode.	

3.10.1.2.1 Limited Automation for Cranes and Hoists

Requirement: Cranes and hoists shall be designed with limited automation, as they will be primarily operated directly via the MHJ in manual mode or locally using pushbuttons on local panels or control pendants.[Sections 11.10, 11.12.3.2, 11.12.3.6, 14.16, ORD, ROIN: 8-6071, ROIN: 1-40008, ROIN: 1-40012, ROIN: 8-487] [Section 7.3.6, BOD, ROIN: 1-40663]

Basis Discussion: Direct operation of cranes and hoists reduces the need for high maintenance on automated equipment.

Verification: Verification is expected to be achieved through the following:

Verif. Method	Verif. By	Plan	Notes/Comments
I	ENG	Review LPH design to verify cranes and hoists can be primarily operated directly and limited automation is provided.	

3.10.1.3 Local Mode

Requirement: LPH equipment operated under MHJ control shall have a local mode that allows direct actuation of the equipment from a local panel, pendant, or MCC, disregards MHJ commands and interlocks, maintains independent protection interlocks, and provides a local/remote status signal to the MHJ. The selection of local control will be logged by the control systems. Some equipment may not have any connection to the MHJ and will only be operated directly in local mode. Operator actions for this equipment will not be recorded by the MHJ. [Sections 11.10, 11.12.3.6, ORD, ROIN: 8-6071, ROIN: 8-6072, ROIN: 8-6073, ROIN: 1-40012][Section 7.3.5.3, BOD, ROIN: 1-40658, ROIN: 1-40659]

Basis Discussion: Local mode allows equipment to be operated for maintenance/diagnostic purposes. Independent protection interlocks remain in-force to prevent mis-operation of equipment.
Verification: Verification is expected to be achieved through the following:

Verif. Method	Verif. By	Plan	Notes/Comments
I	ENG	Review design to verify local mode features and functions are provided.	
D	SU/COM	Demonstrate the operability of local mode features and functions during operation from the local control panels or pendants.	

3.10.2 Nuclear Safety, ALARA, Environmental, and Other Regulatory Requirements

None

3.10.3 System Interface Requirements

None

3.10.4 Other Technical, Specialty, Operations and Maintenance Requirements

3.10.4.1 Cranes and Hoists

3.10.4.1.1 Standardized Operator Controls

Requirement: Control units for the LPH cranes and hoists shall be standardized with similar mechanical handling control units facility-wide. [Section 14.16, ORD, ROIN: 8-473]

Basis Discussion: Standardized operator controls are provided as much as possible to avoid errors that might occur when moving from one crane to another. Differences to accommodate specialized crane/hoist operations are acceptable.

Verification: Verification is expected to be achieved through the following:

Verif. Method	Verif. By	Plan	Notes/Comments
I	ENG	Review design and/or physical configuration to verify similar control units, including push-buttons on local control panels, pendants, and radio control units, are provided for similar cranes and hoists.	May be documented in a facility-wide assessment/report. Operations to participate in or review assessment.

3.10.4.1.2 Off-board Logics

Requirement: Cranes and hoists that enter C5/R5 areas shall have no on-board logic, and all power and signal cables shall be marshalled off-board. [Section 14.16, ORD, ROIN: 8-470]

Basis Discussion: On-board logic is permissible in normally accessible areas (C1/R1 to C3/R3). [ALARA]

Verification: Verification is expected to be achieved through the following:

Verif. Method	Verif. By	Plan	Notes/Comments
I	ENG	Review design of cranes and hoists in C5/R5 areas to verify power and signal cables are marshalled off-board, and devices that execute control logic are located off-board.	

3.10.4.2 Emergency Stop (E-Stop)

Requirement: Where operators will be co-located with operating equipment and physical injury is credible, dedicated emergency stop (E-Stop) buttons shall be provided near the equipment. The location of such stops will depend on the equipment's physical and operational characteristics. [Sections 7.3.9.1, BOD, ROIN: 1-40683][Section 11.12.5.3, ORD, ROIN: 1-40021].

Basis Discussion: Guidance for the application of E-Stops for equipment at the WTP is provided in 24590-WTP-ES-J-11-001.

Verification: Verification is expected to be achieved through the following:

Verif. Method	Verif. By	Plan	Notes/Comments
A	ENG	Evaluate any potential credible events that may lead to operator injury for every piece of MH equipment located in normally accessible areas to determine which equipment requires E-stops.	May be documented in an evaluation/assessment. Operations to participate in or review assessment.
I	ENG/OPS	Review of design to verify incorporation of emergency stops on equipment deemed to have a credible injury hazard.	
D	SU/COM	Demonstrate the capability to stop equipment using the equipment's dedicated emergency stop	

3.10.4.3 Emergency Stop Reporting and Reset

Requirement: When the E-stops are activated, the equipment shall remain in a shutdown state until the circuit is physically reset to prevent equipment restart while the dangerous condition exists. Each individual E-stop, however configured, shall report its status back to their respective control system. Equipment with MHJ connection shall report E-stop status both to the MHJ and to the local control system. Equipment with no MHJ connection shall only provide E-stop status to the local control system. [Section 7.3.9.1, BOD, ROIN: 1-40684, ROIN: 40-23262] [Section 11.12.5.3, ORD, ROIN: 8-8287]

Basis Discussion: E-Stops are normally implemented by the Programmable Electronic System (PES) dedicated for that purpose. For systems with safety instrumented functions, E-stops may also be implemented in conjunction with related safety instrumented systems (for example, using an existing PPJ controller).

There are no safety instrumented functions associated with LPH.

Verification: Verification is expected to be achieved through the following:

Verif. Method	Verif. By	Plan	Notes/Comments
I	ENG	Review design to verify E-stops provide the appropriate status reporting and remain in shutdown state until the circuit is physically reset.	
D	SU/COM	Demonstrate E-stops reporting and reset functions.	

3.10.4.4 Accessibility for Calibration, Testing, and Inspection

Requirement: The LPH system design shall provide the capability to access and perform remote (in cave) or direct (out cave) calibration, periodic functional testing, and inspections of equipment and components during normal operation. [Sections 6.7, 8.1.2, 9.12, 12.6.3, BOD, ROIN: 1-40577, ROIN: 1-40729, ROIN: 1-41030, ROIN: 1-41328][Sections 9.1, 11.16, ORD, ROIN: 8-4345, ROIN: 8-4346, ROIN: 8-10056].

Basis Discussion: None. [ALARA]

Verification: Verification is expected to be achieved through the following:

Verif. Method	Verif. By	Plan	Notes/Comments
I	ENG	Review design to verify in-cave and out-cave configurations facilitate calibration, functional testing, and inspections replacement of equipment and components.	May be documented in an evaluation/assessment. Plant Engineering or Ops to participate in the evaluation/assessment.

3.11 Other Structures, Systems, and Components Requirements

3.11.1 Mission and Functional / Performance Requirements (Including States/Modes)

None

3.11.2 Nuclear Safety, ALARA, Environmental, and Other Regulatory Requirements

None

3.11.3 System Interface Requirements

3.11.3.1 PCW Interface

Requirement: LPH shall interface with the PCW system to provide cooling water for LPH equipment. (D.1)

Basis Discussion: Plant cooling water is supplied to the pour cave cooling panels and the container turntable cooling jacket. Water flows through the jacket and removes heat from the base of the container turntable near the concrete floor. The water-cooling maintains concrete temperatures below the 150°F limit and also reduces temperatures for the turntable rotary bearing.

Verification: Verification is expected to be achieved through the following:

Verif. Method	Verif. By	Plan	Notes/Comments
I	ENG	Review system design to verify PCW provides cooling water for LPH equipment.	

3.11.3.2 ISA Interface

Requirement: LPH shall interface with the ISA system to provide provisions for cooling both Buffer Store Crane components and viewing cameras in the Container Transfer Corridor (G.1)

Basis Discussion: The ISA System supplies air to the Buffer Store Crane (LPH-CRN-00002) to cool the crane mounted cameras and the laser positioning device.

Verification: Verification is expected to be achieved through the following:

Verif. Method	Verif. By	Plan	Notes/Comments
I	ENG	Review design documentation to verify cooling features are incorporated on the Buffer Store Crane.	

3.11.4 Other Technical, Specialty, Operations and Maintenance Requirements

None

3.12 Relevant Codes and Standards

3.12.1 Codes of Record

Table 3-2 identifies relevant external codes and standards applicable to the LPH design. These are selected from those documents that comprise the Code of Record as established in 24590-WTP-RPT-ENG-01-001, Technical Baseline Description, i.e., the WTP Contract, the Basis of Design (BOD), and the Safety Requirements Document Volume II (SRD). Use of these documents is typically invoked in the design process through the documents identified in Section 3.12.2. Beyond inclusion here, no attempt is made in this document to extract individual design requirements from these documents for allocation to SSCs.

In some cases, the expected means of verification may be established on the basis of tests or other criteria required by the codes and standards. This does not necessarily include verification or testing more appropriately defined in the procurement of individual sub-systems or components, or verification or testing that is a routine activity defined by specifications and/or procedures used by construction and startup.

Table 3-2 LAW LPH Applicable Codes and Standards

Implementing Codes and Standards: [Contract No. DE-AC27-01RV14136, WTP Contract]
• Not applicable
Implementing Codes and Standards: [24590-WTP-DB-ENG-01-001, Rev 2, Basis Of Design]
• 29 CFR 1910, *Occupational Safety and Health Standards*
• ANSI N14.6, *Radioactive Materials Special Lifting Devices for Shipping Containers Weighing 10.000 Pounds*
• ASME B30.2, *Overhead and Gantry Cranes (Top Running Bridge, Single or Multiple Girder, Top Running Trolley Hoist)*
• ASME B30.11, *Monorails and Underhung Cranes*
• ASME B30.16, *Overhead Hoists (Underhung)*
• IBC 2000, *International Building Code*
• AWS D1.1/D1.1M, *Structural Welding Code - Steel*
• AWS D1.6, *Structural Welding Code - Stainless Steel*
• CMAA 70, *Specifications for Top Running Bridge and Gantry Type Multiple Girder Electric Overhead Traveling Cranes*
• DOE-STD-1020-94 (Change 1 1996), *Natural Phenomena Hazards Design and Evaluation Criteria for Department of Energy Facilities*

Table 3-2 LAW LPH Applicable Codes and Standards

• NFPA 70-1999, *National Electrical Code*
• UBC 1997, *Uniform Building Code*
• WAC 173-303, *Dangerous Waste Regulation*
Implementing Codes and Standards: [24590-WTP-SRD-ESH-01-001-02, Rev 7c, Section 4, *SRD*]
• AISC M016-89, *ASD Manual of Steel Construction*
• ANSI/AISC N690-1994, *Specification for Safety-Related Steel Structures for Nuclear Facilities*
• ASCE 4-98, *Seismic Analysis of Safety-Related Nuclear Structures*
• ASCE 7-98, *Minimum Design Loads for Buildings and Other Structures*
• DOE-STD-1066-97, *Fire Protection Design Criteria*
• DOE O 420.1B, *Facility Safety*
• IESNA RP-7 (2002), *Industrial Lighting*
• NFPA 70-1999, *National Electrical Code*
• NFPA 801-2003, *Standard for Fire Protection for Facilities Handling Radioactive Materials*

3.12.2 WTP Design Criteria, Design Guides, and General Specifications

Table 3-3 identifies relevant discipline design criteria, guides, and general specifications applicable to the LAW LPH. Use of these documents to develop the detailed design of SSCs is governed by engineering procedures. The majority of requirements within these documents are derived from external codes and standards or are specified methods and approaches to achieve standardization and consistency of design. Beyond inclusion here, no attempt is made in this document to extract individual design requirements from these documents for tracing and verification, or to define how direction provided by these documents is applicable and allocated (or not) to individual SSCs.

Table 3-3 WTP Design Criteria, Guides, and General Specifications Applicable to LAW LPH

Document Number	Title
Design Criteria Documents	
24590-WTP-DC-M-06-001	*Mechanical Systems Design Criteria*
24590-WTP-DC-E-01-001	*Electrical Design Criteria*
24590-WTP-DC-ENG-06-001	*Design Criteria for Environmental and Natural Phenomena Hazard Qualification of Structures Systems and Components*
24590-WTP-DC-ST-04-001	*Seismic Analysis and Design Criteria*
Design Guides	
24590-WTP-GPG-ENG-086	Equipment Environmental Qualification
24590-WTP-GPG-ENG-0103	Equipment Seismic Qualification
24590-WTP-GPG-ENG-0109	Accessibility Review of Equipment and Components
24590-WTP-GPG-ENG-0127	Processing Engineering Calculations
24590-WTP-GPG-ENG-0141	WTP Radiation Damage Thresholds for Non-Metallic Materials
24590-WTP-GPG-ENG-0159	Single Failure Analysis Process for Mechanical, HVAC, and Control Systems
24590-WTP-GPG-J-005	Control Systems Interfaces
24590-WTP-GPG-J-014	Control Systems Design Process Guide
24590-WTP-GPG-J-017	WTP Seismic Category Application to C&I Systems
24590-WTP-GPG-M-036	Determining Quality Level and Seismic Category Classification of Sub-Components, Assemblies, Sub-Assemblies, and Parts
24590-WTP-GPG-M-052	Specifying Design Cycles for Equipment and Piping
24590-WTP-GPG-SRAD-001	Design Guide for ALARA
Specifications	
24590-WTP-3PS-FB01-T0001	Equipment Specification for Seismic Qualification of Seismic Category III & IV Equipment and Tanks
24590-WTP-3PS-G000-T0015	Engineering Specification for Environmental Qualification of Mechanical Equipment
24590-WTP-3PS-JQ00-T0004	Engineering Specification for Management of Supplier Software
24590-WTP-3PS-JQ07-T0001	Engineering Specification for Instrumentation for Package Systems
24590-WTP-3PS-JQ08-T0001	Engineering Specification for Construction and Installation of Controls and Instrumentation
24590-WTP-3PS-M000-T0002	Engineering Specification for Master Slave Manipulators for PTF, HLW, LAW, and LAB
24590-WTP-3PS-MJKH-T0001	Engineering Specification for Commercial Quality Monorail Hoists, Job Cranes, and Under Running Single Girder Cranes
24590-WTP-3PS-MJKH-T0002	Engineering Specification for Process Monorail Hoists
24590-WTP-3PS-SS90-T0002	Engineering Specification for WTP Project Tailoring of ANSI/AISC N690 & IEEE 323, 344 & 382

4 System Description

This section summarizes design output information, describing the current design and the operational and maintenance aspects of the system. The information provided below does not contain design requirements and should not be used as design input. The description of the current design contained in this section may not fully align with design requirements. This is acceptable within the context of this document. Areas of misalignment are to be resolved through appropriate mechanisms and the SDD updated to reflect changes made to the design. Changes to the descriptive text will be made following the changes to the lower tiered Engineering documents.

4.1 Configuration Information

The System LPH facility layout design is configured to comply with ALARA, As Low As Reasonably Achievable, by segregating and classifying areas based on their potential for contamination and radiological dose rates. Contamination is controlled by cascading air flow from areas of low or no contamination to areas of higher potential contamination. System LPH also contains dedicated maintenance areas where equipment located in areas of higher contamination can be brought into an area of lower contamination for decontamination and hands-on maintenance activities. The Pour Caves are the areas with the highest contamination. The concrete surfaces are covered with a stainless steel lining for easy decontamination. Concrete surfaces in the remaining C5 areas are covered with a smooth surface Novolac coating and C3 areas are coated with an epoxy coating both which allows for easy decontamination. Room finish details can be found on drawing 24590-LAW-A5-A19T-05200001, *LAW Vitrification Building Architectural Room finish Schedule.*

4.1.1 Description of System, Subsystems, and Major Components

Mechanical handling equipment in System LPH is designed to meet ALARA requirements. System LPH uses dedicated equipment for process operations such as bogies and cranes. Maintenance operations are carried out by maintenance equipment. Mechanical handling equipment is designed for a nominal plant life of 40 years to minimize worker exposure by not requiring routine maintenance. Where commercially available components do not have a design life of 40 years, the equipment is designed to incorporate special features to minimize personnel exposure during maintenance such as ease of decontamination and modular components to minimize dismantling and maintenance time. Where equipment is subject to radiation and remote handling, equipment is designed with remote handling features. Components of in-cave equipment that require a high degree of maintenance are located out-cave. Wherever possible, permanently lubricated sealed for life components are used. Refer to 24590-WTP-3PS-M000-T0002, *General Specification for Mechanical Handling Equipment Design and Manufacture.* [3.4.1.2, 3.4.4.2]

4.1.1.1 Container Transport Bogie

Plant Item Numbers: 24590-LAW-MQ-LPH-TRLY-00001/00002

Refer to:

24590-WTP-3PS-MQR0-T0003, *Engineering Specification for LAW and PTF Bogies*
24590-CM-MRA-MQTS-00001, *Bogies Standardized C/DS*

Two variable speed motorized Container Transport Bogies service the four Pour Caves (L-B011C, L-B013B, L-B013C, L-B015A). Each Container Transport Bogie operates on its own sets of rails that run east to west in the Container Transfer Corridor (L-B025B) between column lines 2 and 14. The Container Transport Bogies are capable of carrying one full container with an attached lower overpack. They have four wheels, two of which are powered by electric motors. The Container Transport Bogies get their power from a conductor bar (24590-LAW-

MQ-LPH-TRLY-00003/00004) located between the north and south container transfer lines. The Container Transport Bogie positioning is obtained from a laser-positioning device (24590-LAW-MQ-LPH-TRLY-00005/00006) located at column line 2 in the Bogie Maintenance Facility (L-B025A) and a reflector mounted on the Container Transport Bogie. The Container Transport Bogies can be remotely operated from the LAW Facility Control Room (FCR) or from a Local Operator Interface (LOI). Normal operations occur between column lines 3 and 14 in the Container Transfer Corridor. See Figure 4-1. [3.6.1.1, 3.6.1.2]

The Container Transport Bogies' functional purpose is to:

- Move full and empty containers between the Container Import, Pour Cave, and Container Storage/Export Positions
- Move equipment to any of the four Monorail Hoists and Buffer Store Crane (LPH-CRN-00002)

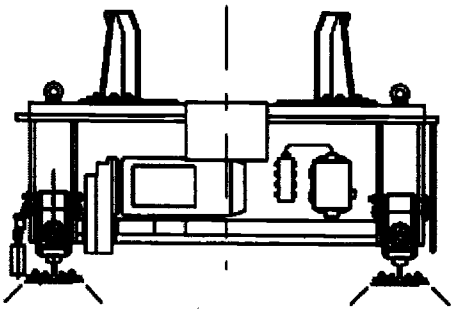

Figure 4-1 Container Transport Bogie

4.1.1.2 Bogie Maintenance Doors

Plant Item Numbers: 24590-LAW-AD-LPH-DOOR-00008/00027

Refer to:

24590-LAW-3PS-ADDM-T0003, *LAW Bogie and Monorail Shield Doors*
24590-CM-MRA-ADDH-00005, *Shield Doors Standardized Bogie Maintenance C/DS*
24590-CM-POA-ADDH-00005-10-02, *Report – Analysis & Design Report – Compliance Matrix*

Separating the Container Transfer Corridor (R5/R3/C5) and the Bogie Maintenance Facility (R3/C3) are two Bogie Maintenance Doors, one door for each transfer line. The doors aid in contamination control by regulating air flow between adjoining rooms. The facility ventilation system and the doors work in tandem to maintain a controlled airflow pattern that cascades from areas of lower potential contamination into areas of higher potential contamination. An adjustable air gap provides an allowable pressure drop between the C3 and C5 environments. The adjustable gap is a slotted plate attached to the doorframe by screws. The slotted plates can slide horizontally between the confinement door and the frame to reduce the air gap around the opening of the door. These doors are vertically raised and lowered by an electrically driven chain and sprocket drive. The doors can be remotely operated from the LAW FCR or from a LOI. The door remains closed during normal operations. The Bogie Maintenance Facility Door Laser Window (24590-LAW-MH-LPH-MHAN-00022/00023) in the door allows the laser-positioning device, used by the Transport Bogie, to operate while the door is closed. See Figure 4-2. [3.9.1.1, 3.9.1.2]

The Bogie Maintenance Doors' functional purpose is to:

- Minimize contamination migration from the Container Transfer Corridor into the Bogie Maintenance Facility
- Regulate airflow through an engineered gap from the Bogie Maintenance Facility into the Container Transfer Corridor

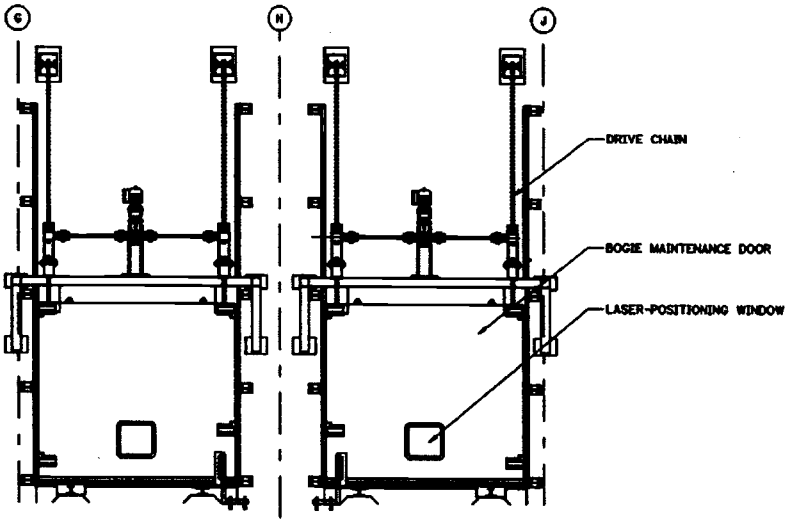

Figure 4-2 Bogie Maintenance Doors

4.1.1.3 Bogie Recovery System

Plant Item Numbers: 24590-LAW-MH-LPH-RCVY-00001/00002

Refer to:

24590-WTP-3PS-MQR0-T0003, *Engineering Specification for LAW and PTF Bogies*
24590-CM-MRA-MQTS-00001, *Bogies Standardized C/DS*

The Bogie Recovery System will only be used during an off-normal event. A cable sits between the rails that span between column lines 2 and 14 in the Container Transfer Corridor. A drag block that sits on the east end of the rail is attached to the cable. The other end of the cable is attached to a winch located in the Bogie Maintenance Facility. When the Container Transport Bogie becomes immobilized on the rails due to a component failure, the electric winch will reel in and catch the Container Transport Bogie with the drag block. This Bogie Recovery System is controlled by the Integrated Control Network (ICN) or through a LOI. If a container is present on the Container Transport Bogie, the operator will be required to unload the container at a Pour Cave entrance prior to bringing it into the Bogie Maintenance Facility. Once the Container Transport Bogie is repaired, the Container Transport Bogie will push the drag block and cable back to its original position. See Figure 4-3. [3.4.4.2]

The Bogie Recovery System's functional purpose is to:

- Recover Container Transport Bogies when motor has failed or wheels have seized
- Move Container Transport Bogie to any of the four Pour Cave Monorail Hoists for unloading of containers prior to entering the Bogie Maintenance Facility

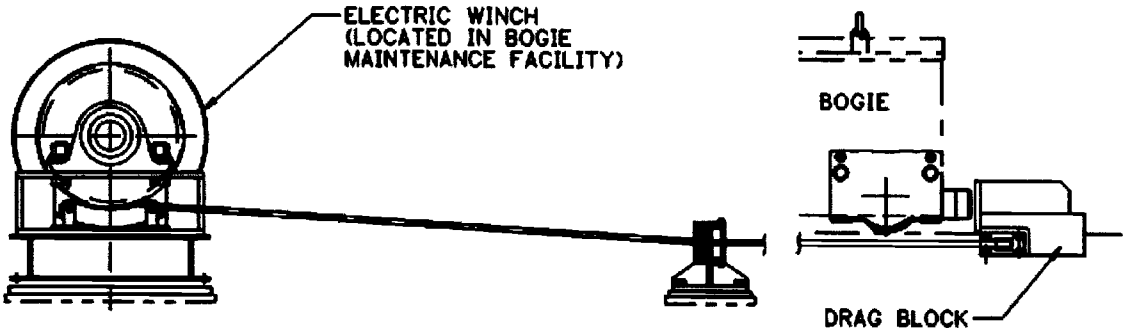

Figure 4-3 Bogie Recovery System

4.1.1.4 Bogie Maintenance Hoist

Plant Item Number: 24590-LAW-MJ-LPH-HST-00007

Refer to:

24590-WTP-3PS-MJKH-T0001, *Commercial Quality Monorail Hoists, Jib Cranes, and Under-Running Single Girder Cranes*
24590-CM-MRA-MJKH-00002, *Monorail Hoists, Jib Cranes, Under-Running Single Commercial C/S (MH013) (VHC8)*

The Bogie Maintenance Hoist is located above the north and south Transport Bogie Lines in the Bogie Maintenance Facility, running in the north and south directions. The Bogie Maintenance Hoist is an electrically driven hoist and trolley with local operator control. The 3-ton Bogie Maintenance Hoist is capable of lifting a Container Transport Bogie off the rails and moving it in the North and South directions. [3.5.1.2]

The Bogie Maintenance Hoist's functional purpose is to:

- Lift and lower the Container Transport Bogie and/or components to perform inspections and maintenance

4.1.1.5 Pour Cave Monorail Hoists

Plant Item Numbers: 24590-LAW-MJ-LPH-HST-00001/00002/00003/00004

Refer to:

24590-WTP-3PS-MJKH-T0002, *Process Monorail Hoists*

24590-CM-MRA-MJKH-00001, *Monorail Hoists Standardized High Integrity C/DS*

There are four, 10-ton Monorail Hoists serving four Pour Caves. The primary purpose of the Pour Cave Monorail Hoist is to lift and move containers between the Container Park Stand, the Container Transport Bogie, and the Pour Cave import/export position. The hoists run along overhead beams located between row lines F and K. The overhead beam runs north from row line K and then curves towards the center of the Container Turntable just after row line G. The curve in the beam allows the hoist to be positioned over the import/export position (normal operating position). The Pour Cave Monorail Hoist can also be used to assist personnel in removing the Container Turntable components. The hoist is not capable of performing a true vertical lift from the turntable center. The hoist is capable of lifting the Container Turntable from its base to maintain the Container Turntable components. There are onboard motors for both the trolley and hoist functions, powered by a festoon system. A laser-positioning device located in the Monorail Hoist Maintenance Facility (L-B023A & L-B023B) and a reflector mounted onboard the Pour Cave Monorail Hoist controls the trolley position. The hoist operations are completely operator-controlled with assistance from the CCTV cameras located in the Container Transfer Corridor and Pour Caves. The hoist and trolley can be remotely operated from the LAW FCR or a LOI. [3.5.1.2]

The Monorail Hoists' functional purpose is to:

- Move full and empty containers between Pour Cave import/export position, Container Transport Bogie, and Container Park Stand
- Provide removal of Container Turntable components during maintenance work
- Provide container presence

4.1.1.6 Container Park Stands

Plant Item Numbers: 24590-LAW-MH-LPH-MHAN-00040 through 24590-LAW-MH-LPH-MHAN-00061

Refer to:

24590-LAW-3PS-MQLL-T0001, *Engineering Specification for LAW Container Stands/Bogie Shutters*
24590-QL-MRA-SY00-00003, *Process Canister Racks L/DS QL*

There is one Container Park Stand (LPH-MHAN-00058/59/60/61), located between the south Transport Bogie Line and the Monorail Hoist Maintenance Facility entrance, for each of the Pour Cave Monorail Hoists. These four Container Park Stands stage empty containers while a full container is being exported from the Pour Cave. There are also 12 Container Park Stands (LPH-MHAN-00040 through LPH-MHAN-00051) located in the Buffer Store Area (L-B025C) and three Park Stands (LPH-MHAN-00052/53/54) located in the Container Rework Area (L-B025D). These are used to stage full containers when the finishing lines are unable to accept any additional containers. Each Container Park Stand is permanently set in place and designed to support a container during cooling and protect the concrete by dissipating heat from the filled container. The Container Park Stands in the Buffer Store Area are designed with a top ring that the container sits on. The top ring has an inner diameter of 36" and an outer diameter of 50"and has a 2"offset from the outer edges of the Container Park Stand. The Container Park Stands are located adjacent to each other north to south direction and 6" apart in the east to west direction. Therefore, containers will be a minimum of 4" apart in the north to south direction and a maximum distance of 14" in the east to west direction. Refer to drawings 24590-LAW-M0-LPH-00001001 through 24590-LAW-M0-LPH-00001004.

The Container Park Stands' functional purpose is to:

- Provide a location to place full and empty containers.
- Provide insulation to concrete floor from full containers.

4.1.1.7 Monorail Maintenance Shield Doors

Plant Item Numbers: 24590-LAW-AD-LPH-DOOR-00011/00012/00020/00021

Refer to:

24590-LAW-3PS-ADDM-T0003, *LAW Bogie and Monorail Shield Doors*
24590-CM-MRA-ADDH-00005, *Shield Doors Standardized Bogie Maintenance C/DS*
24590-CM-POA-ADDH-00005-10-05, *Report – Monorail Maintenance Shield Doors – Compliance Matrix*

Separating the Container Transfer Corridor (R5/R3/C5) and the Monorail Hoist Maintenance Facilities (R3/C3) are four sets of double-hinged doors that, when closed, provide contamination control and radiological shielding for personnel and equipment positioned inside the Monorail Hoist Maintenance Facilities. A single electric linear actuator opens and closes the Monorail Maintenance Shield Doors. The doors swing inward towards the Monorail Hoist Maintenance Facility with all of the actuators mounted on the inside of the Monorail Hoist Maintenance Facility. Each door is three inches thick. A P-strip seal is used around the perimeter of the Monorail Maintenance Shield Door opening. When the doors close the P-strip seal is compressed. Cutouts in the door accommodate the festoon/reel system and overhead monorail beam. Adjustable plates are placed over the cutouts to obtain an allowable pressure drop between the Monorail Hoist Maintenance Facility and the Container Transfer Corridor. A small window in the door allows the laser-positioning device, used by the Pour Cave Monorail Hoist, to operate while the door is closed. These doors are closed during normal operation. The doors can be remotely operated from the LAW FCR or from a LOI. See Figure 4-4. [3.9.1.1. 3.9.1.2]

The Monorail Maintenance Shield Doors' functional purpose is to:

- Minimize contamination migration from the Container Transfer Corridor into the Monorail Hoist Maintenance Facility
- Regulate airflow from the Monorail Hoist Maintenance Facility into the Container Transfer Corridor
- Provide shielding to personnel in the Monorail Hoist Maintenance Facility from container operations in the Container Transfer Corridor

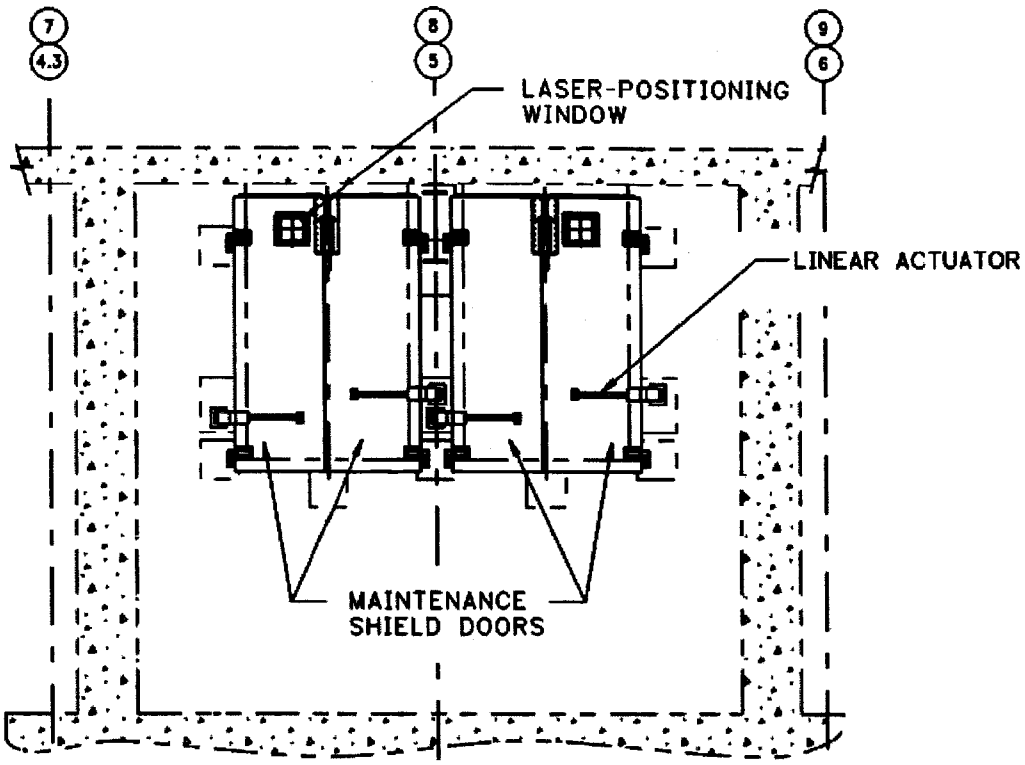

Figure 4-4 Monorail Maintenance Doors

4.1.1.8 Pour Cave Shield Doors

Plant Item Number: 24590-LAW-AD-LPH-DOOR-00009/00010/00016/00017

Refer to:

24590-LAW-3PS-ADDM-T0003, *LAW Bogie and Monorail Shield Doors*
24590-CM-MRA-ADDH-00005, *Shield Doors Standardized Bogie Maintenance C/DS*
24590-CM-POA-ADDH-00005-10-06, *Report – Pour Cave Shield Doors – Compliance Matrix*

Separating the Container Transfer Corridor from the Pour Caves are four Pour Cave Shield Doors. The doors can be actuated both horizontally and vertically. A horizontally actuated door rolls in front of the Pour Cave entrance and then a vertically actuated door extension panel, mounted to the front of the horizontally moving door, moves over the gap between the ceiling and the horizontally actuated door. The horizontal door has two wheels, one of which is actuated by an electric motor. The vertically sliding door is actuated by a linear drive motor and has four wheels guided by two rails. A U-channel seal is used around the perimeter of the door opening. The shield doors are open during normal operations. When the doors close, the door will slide against the U-channel creating a seal. The doors are three inches thick. The doors can be remotely operated from the LAW FCR or from a LOI. See Figure 4-5. [3.9.1.1, 3.9.1.2]

The Pour Cave Shield Doors' functional purpose is to:

- Minimize contamination migration from the Pour Cave to the Container Transfer Corridor during maintenance activities
- Regulate airflow from the Container Transfer Corridor to the Pour Cave during maintenance operations
- Provide shielding to personnel in the Pour Cave from container transfer operations in the Container Transfer Corridor during maintenance operations
- Provide shielding to maintenance personnel in the Container Transfer Corridor from containers in the Pour Cave during maintenance activities.

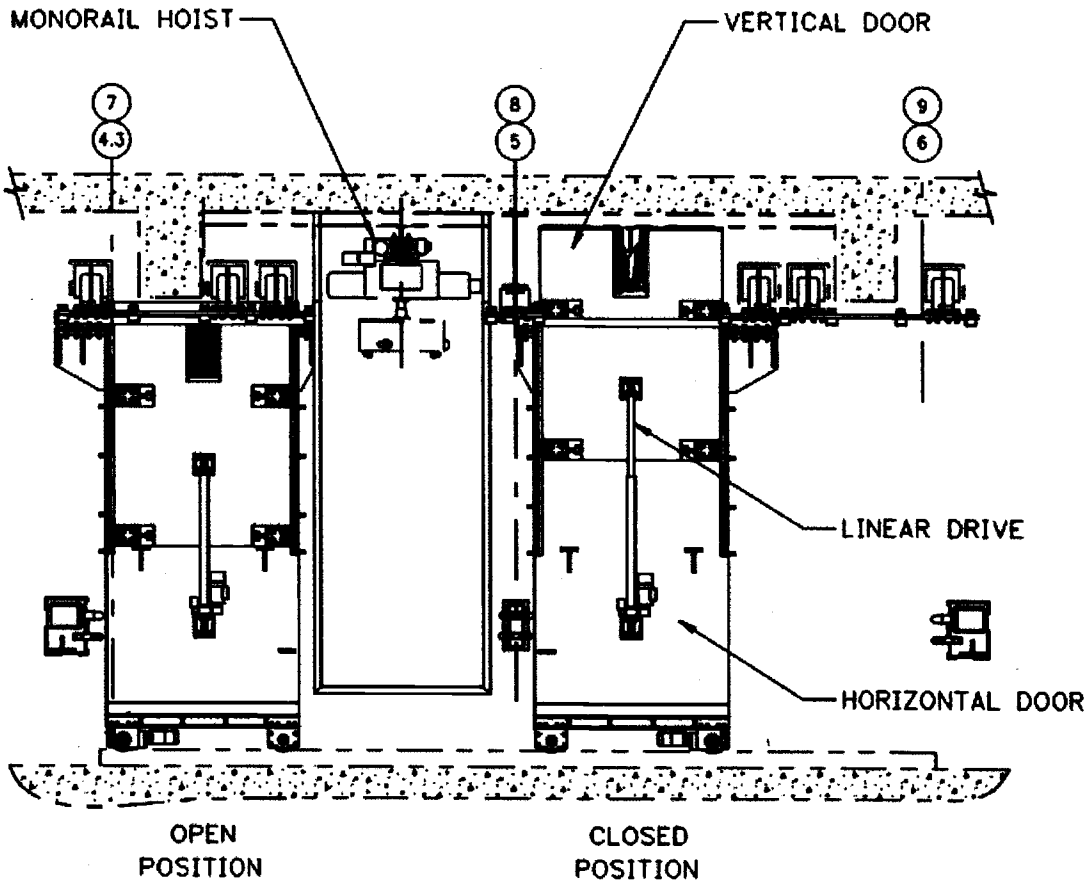

Figure 4-5 Pour Cave Shield Doors

4.1.1.9 Container Turntables

Plant Item Numbers: 24590-LAW-MJ-LPH-TTBL-00001/00002/00003/00004

Refer to:

24590-LAW-3PS-MJT0-T0002, *Engineering Specification for LAW Pour Cave Turntable and Elevator Equipment*

24590-CM-MRA-MJW0-00001, *LAW Pour Caves (Includes Turntable and Elevator) C/DS*
24590-CM-POA-MJW0-00001-01-01, *Matrix – Design Compliance/Requirements*

There is one Container Turntable located in each of the four Pour Caves that allows simultaneous operation of import/export, elevating and filling, and container cooling. The Container Turntable contains three Lower Overpacks that support the product containers on the turntable in a circular arrangement. All actuators and sensors associated with the Container Turntable are located through-wall, outside the Pour Cave. A through-wall drive (24590-LAW-EM-LPH-MTR-00001/00002/00003/00004) rotates the Container Turntable in both the clockwise and counter-clockwise directions. A right-angle gearbox, placed in-line between the through-wall drive and the Container Turntable, reduces the Container Turntable speed to ½ - revolutions per minute (RPM). The gearbox and through-wall drive is installed and uninstalled as one piece. A through-wall position sensor confirms the Container Turntable position prior to lock pin engagement. A through-wall lock pin engages the Container Turntable at its pour position and prevents accidental rotation from occurring while the Container Elevator (See section 4.1.1.11) is in the raised position. Each Container Turntable is capable of holding three full containers. The Container Turntable has a special cooling jacket to protect the concrete floor. The cooling jacket interfaces with the Plant Cooling Water (PCW) System (refer to Section 4.1.2.6). Water flows through the jacket and removes heat from the base of the Container Turntable near the concrete floor. The Container Turntable can be remotely operated from the LAW FCR or from an LOI. See Figure 4-6. [3.4.4.4, 3.11.3.1]

The Container Turntables' functional purpose is to:

- Provide positioning of three containers for import/export, glass pouring, and cooling
- Provide indexing and support for three Lower Overpacks at the above mentioned locations
- Provide thermal protection of the concrete floor through a cooling jacket, which is supplied by plant water
- Prevent movement of the Container Turntable while the container elevator is in the raised position using a locking pin

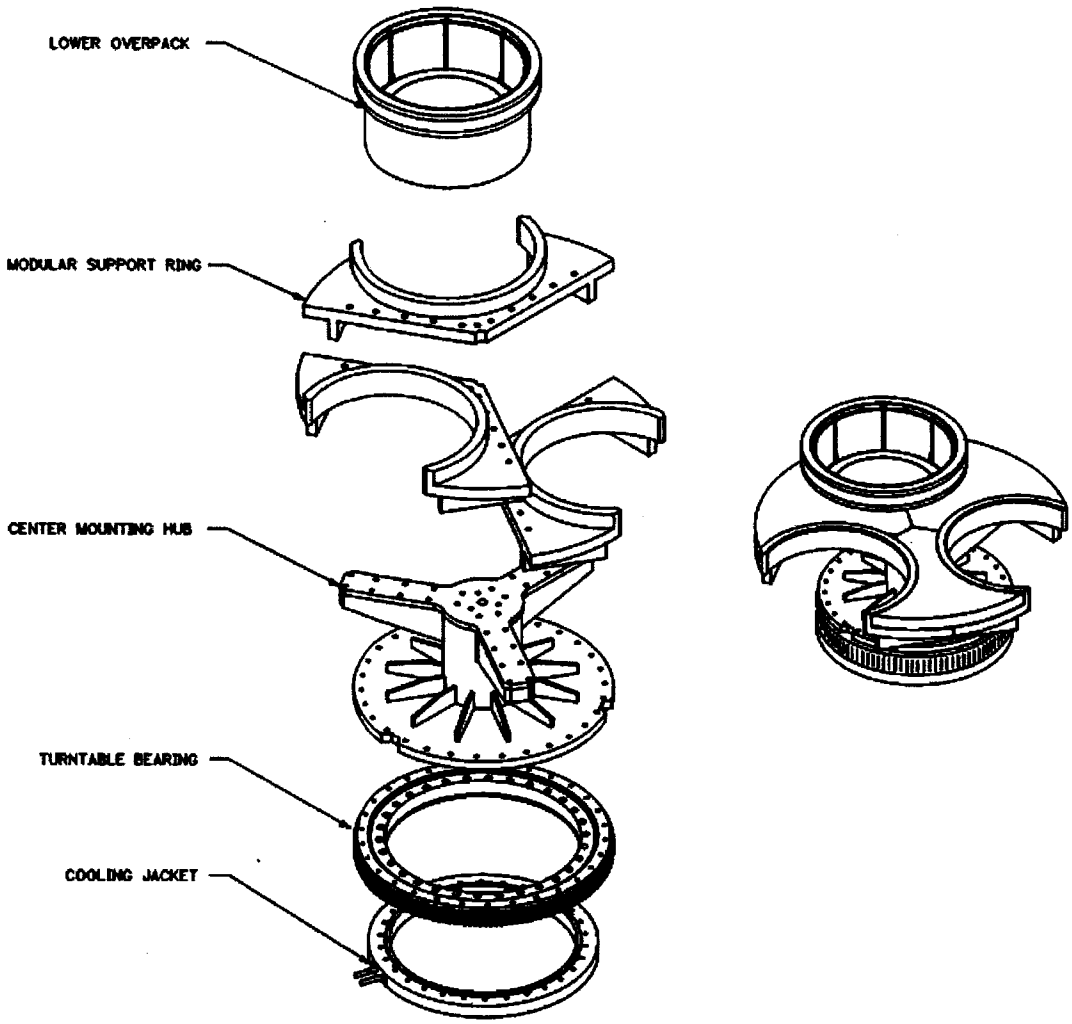

Figure 4-6 Pour Cave Turntable

4.1.1.10 Container Lower Overpack

The Container Lower Overpack provides support for the container. A Lower Overpack is located at each of the three positions on the Container Turntable. A Lower Overpack receives a container at the import/export position on the Container Turntable. At the pour position, both the Lower Overpack and the container are raised and lowered by the Container Elevator. At the cooling position, the Lower Overpack offers thermal shielding of the filled container for the Container Turntable. Ribs on the inside of the Lower Overpack provide spacing between the container and overpack walls and help to avoid glass shards being crushed by the container. See Figure 4-7.

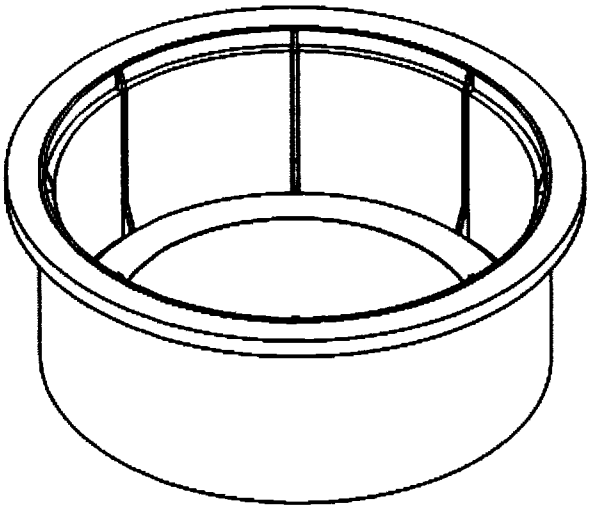

Figure 4-7 Container Lower Overpack

4.1.1.11 Container Elevators

Plant Item Numbers: 24590-LAW-AC-LPH-ELEV-00001/00002/00003/00004

Refer to:

24590-LAW-3PS-MJT0-T0002, *Engineering Specification for LAW Pour Cave Turntable and Elevator Equipment*
24590-CM-MRA-MJW0-00001, *LAW Pour Caves (Includes Turntable and Elevator) C/DS*
24590-CM-POA-MJW0-00001-01-01, *Matrix – Design Compliance/Requirements*

The Container Elevator raises empty containers from the Container Turntable to the Melter Seal Head of System LMP. Once filled, the Container Elevator lowers the filled container to the Container Turntable. The Container Elevators are located in the Pour Caves along row line E.8. Dual electric drive motors (24590-LAW-EM-LPH-MTR-00005/00006/00007/00008/00009/00010/00011/00012) and sensors are located outside the Pour Cave to facilitate maintenance. The Container Elevators have load cells to detect whether a container is full or not. The Container Elevator has redundant drive motors to prevent a container from prematurely lowering when one motor fails. The drive system also incorporates redundant rigid chain to support the container load. Each rigid chain is capable of supporting the full elevator load. The Container Elevator can be remotely operated from the LAW FCR or from a LOI. See Figure 4-8.

The elevator assembly separates the Pour Caves (R5/C5) and the Mechanical Rooms L-B012 and L-B014 (R3/C3). The Container Elevator provides the necessary radiological shielding and containment barrier between these areas by incorporation of hinged metal shield doors. During maintenance downtime, the doors can be opened from the mechanical rooms to access elevator components.

The Container Elevators' functional purpose is to:

- Raise and lower the container between the Container Turntable and the LMP Melter Seal Head
- Provide indication of a full, partially full, or empty container using load cells
- Provide radiological shielding and containment barrier

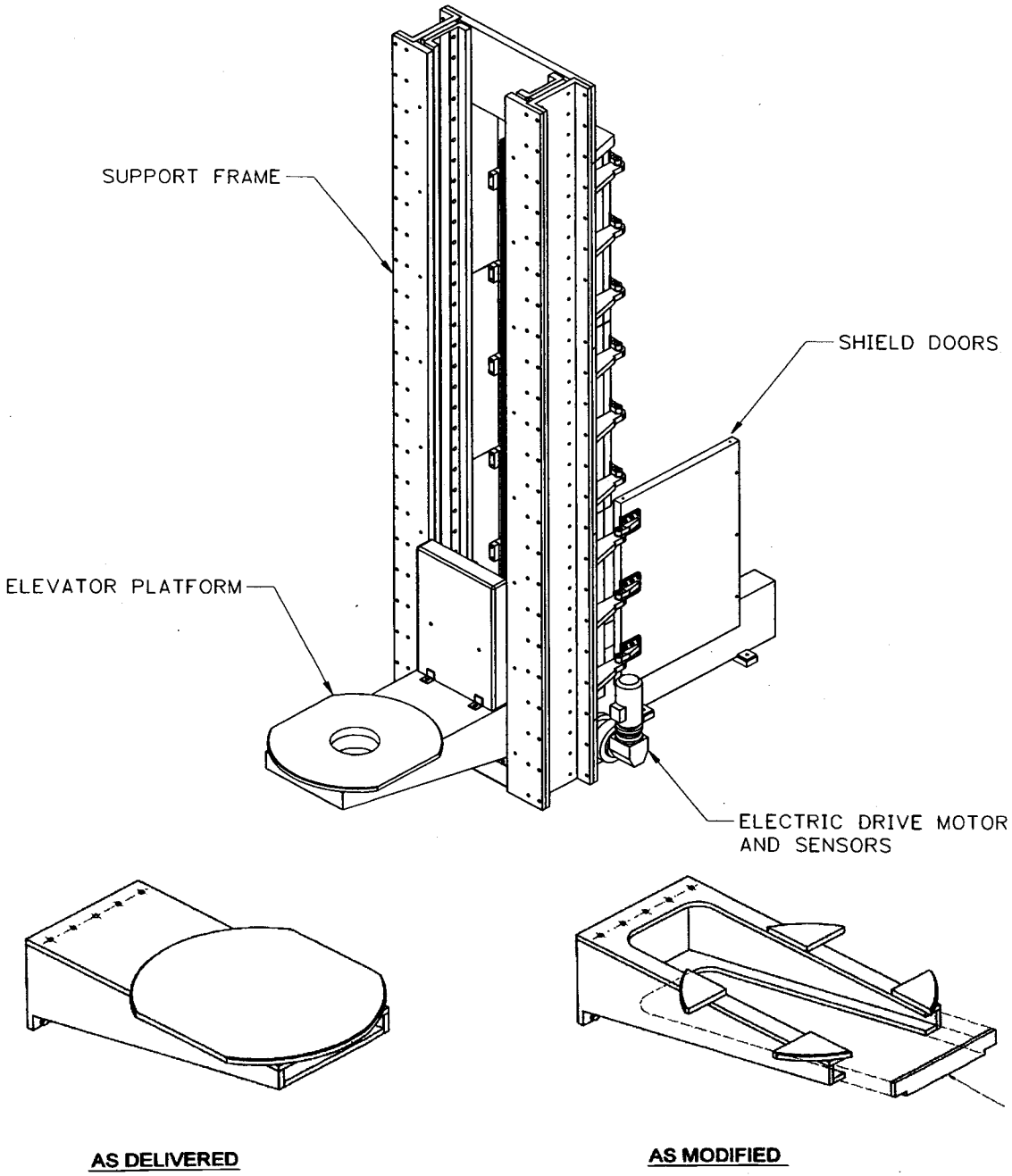

Figure 4-8 Pour Cave Elevator and Modified Platform

4.1.1.12 Transfer Corridor Shield Door

Plant Item Numbers: 24590-LAW-AD-LPH-DOOR-00024/00026

Refer to:

24590-LAW-3PS-ADDM-T0003, *LAW Bogie and Monorail Shield Doors*
24590-CM-MRA-ADDH-00005, *Shield Doors Standardized Bogie Maintenance C/DS*

The Transfer Corridor Shield Doors separate the Container Transfer Corridor from both the Buffer Store and Container Rework Areas. The single-hinged, manually-operated Transfer Corridor Shield Doors are for shielding only and are not a contamination barrier. The doors are mounted to the front of an opening in a half-height wall. They are physically closed during maintenance operations. The doors remain open during normal operations. Door status is available to the ICN. See Figure 4-9. [3.9.1.1]

The Transfer Corridor Shield Doors' functional purpose is to:

- Shield personnel in the Container Transfer Corridor from the full containers in the Buffer Store Area to the north and Container Rework Area to the south

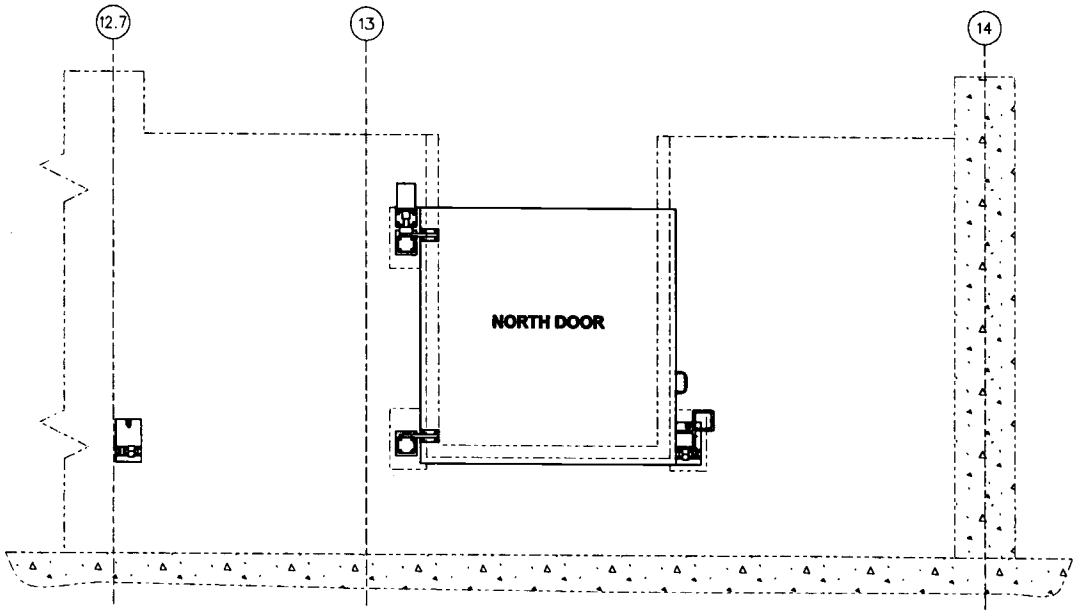

Figure 4-9 Transfer Corridor Shield Door

4.1.1.13 Container Export Stands

Plant Item Numbers: 24590-LAW-MH-LPH-MHAN-00019/00020

Refer to:

24590-LAW-3PS-MQLL-T0001, *Engineering Specification for LAW Container Stands/Bogie Shutters*
24590-QL-MRA-SY00-00003, *Process Canister Racks L/DS QL*

The Container Export Stands are permanently fixed between the rails of both the north and south transfer lines. These stands have a low profile to allow the Container Transport Bogie to move over the top of them without any obstructions. Product containers are staged on the Container Export Stand prior to exportation to System LFH. Containers may also be exported directly from the Container Transport Bogie, which requires operator verification that the Container Export Stand is vacant prior to moving the bogie to the export position. The Container Export Stand insulates the concrete floor from the high temperature of the product container.

The Container Export Stands' functional purpose is to:

- Provide a location to place a container when the Container Transport Bogie is not located at the export position

4.1.1.14 Container Rework Turntable

Plant Item Number: 24590-LAW-MJ-LPH-TTBL-00TBD

Note: This item is a future conceptual recovery design and will be procured on an as-needed basis. Reserved space for the turntable has been allocated in 24590-LAW-P1-P23T-00007.

The Container Rework Turntable is an electrically-driven, portable device located in the Container Rework Area for use in off-normal container rework operations. The Container Rework Turntable replaces container position A10 (as seen in 24590-LAW-M7-LPH-00001003, *LAW Vitrification System LPH Mechanical Handling Diagram Container Pour Handling System)* where it can be handled by a locally controlled MSM (to be procured on an as-needed basis).

The Container Rework Turntable's functional purpose is to:

- Allow the MSM to work on areas of over-filled product containers that are unreachable, by rotating the product container 360 degrees

4.1.1.15 Buffer Store Crane

Plant Item Number: 24590-LAW-MJ-LPH-CRN-00002

Refer to:

24590-LAW-3PS-MJKG-T0001, *Top Running, Overhead Process Cranes – Low Activity Waste Vitrification Facility*
24590-CM-MRA-MJKG-00003, *CMAA 70 Commercial Grade Cranes (MH018) (VHCA) (ECI)*

The Buffer Store Crane operates within the bounds of column lines 12.7 & 14, and row lines E & K. The Buffer Store crane is a 10-ton bridge crane capable of remotely lifting a full container or Container Rework Turntable. The Buffer Store Crane primarily moves full containers between the Buffer Store Area, Container Transport Bogies, and export positions.

The bridge portion of the Buffer Store Crane has four wheels each driven by its own electric motor (24590-LAW-EM-LPH-MTR-00036/00037/00038/00039). The trolley portion has two sets of dual wheels: a front and rear set. Each wheel in a set is connected together by a shaft. Each set is driven by an electric motor (24590-LAW-EM-LPH-MTR-00044/00045). There are electrically actuated jack-down wheels for the recovery of the bridge and trolley. The hoist portion has a dual drum configuration where one end of the cable is attached to the main drum while the other end is attached to the recovery drum. Each drum is driven by an electric motor. A laser-positioning device located on the Buffer Store Crane and a reflector mounted on the south wall of the Buffer Store Area controls the bridge. A laser-positioning device and reflector mounted on the Buffer Store Crane controls the trolley. The hoist is manually controlled with an encoder mounted on the Buffer Store Crane. The crane operates between row lines F and J.6 during normal operations. The Buffer Store Crane can be remotely operated from the LAW FCR or from a LOI. For maintenance operations, the crane is parked in the Buffer Store Crane Maintenance Facility where inspections are performed in a low radiation/contamination area. [3.4.4.2, 3.4.4.3, 3.5.1.2]

The Buffer Store Crane is equipped with crane mounted remote control pan/tilt/zoom (PTZ) cameras (PTJ-XT-2026/2027) for overhead viewing of the containers. The cameras provide visual confirmation of the crane's position for the operator. Refer to 24590-LAW-J0-PTJ-00001, *LAW Vitrification System PTJ Supplemental Instrumentation Diagram CCTV Equipment at El. -21 FT - 0 in.* The Buffer Store Crane is equipped with floodlights mounted at the lower edge of the crane bridge girders to illuminate the working area below. [3.4.4.5, 3.4.4.6, 3.5.4.1]

The Buffer Store Crane's functional purpose is to:

- Move full containers from the north and south transfer lines into the Buffer Store Area
- Move full containers within the Buffer Store Area as required
- Move full containers between the Buffer Store Area and the container export position
- Provide over-head camera view of containers
- Place the Container Rework Turntable in the Buffer Store Area
- Remove the Container Recovery Frame from the Buffer Store Crane Maintenance Facility

4.1.1.16 Buffer Store Crane Maintenance Shield Door

Plant Item Number: 24590-LAW-AD-LPH-DOOR-00025

Refer to:

24590-LAW-3PS-ADDM-T0001, *Engineering Specification for LAW Crane Maintenance Shield Doors*
24590-CM-MRA-ADDH-00002, *Shield Doors, Decontamination, Maintenance Cranes C/DS (MH005) (VHC4)*

The Buffer Store Crane Maintenance Shield Door separates the Buffer Store Area (R5/R3/C5) from the Buffer Store Crane Maintenance Facility (R3/C3). The Buffer Store Crane Maintenance Shield Door has four guide wheels, which ride on vertically mounted rails. An electric continuous chain drive system moves the Buffer Store Crane Maintenance Shield Door vertically. The drive system consists of a gearbox with dual right angle shafts extending to the drive chain sprockets. The motor operation and speed are controlled by a three-horsepower variable frequency drive. An adjustable air gap provides an allowable pressure drop between the C3 and C5 environments. The adjustable gap is a slotted plate attached to the doorframe by screws. The slotted plates can slide horizontally between the shield door and the frame to reduce the air gap around the opening of the door. Cutouts in the door accommodate the drag chain and crane rail. The door is three inches thick. The door remains

closed during normal operations. The door can be remotely operated from the LAW FCR or from a LOI. See Figure 4-10. [3.9.1.1, 3.9.1.2]

The Buffer Store Crane Maintenance Shield Door's functional purpose is to:

- Minimize contamination migration from the Buffer Store Area to the Buffer Store Crane Maintenance Facility.
- Regulate airflow from the Buffer Store Crane Maintenance Facility to the Buffer Store Area.
- Provide shielding to personnel in the Buffer Store Crane Maintenance Facility from container operations in the Buffer Store Area.

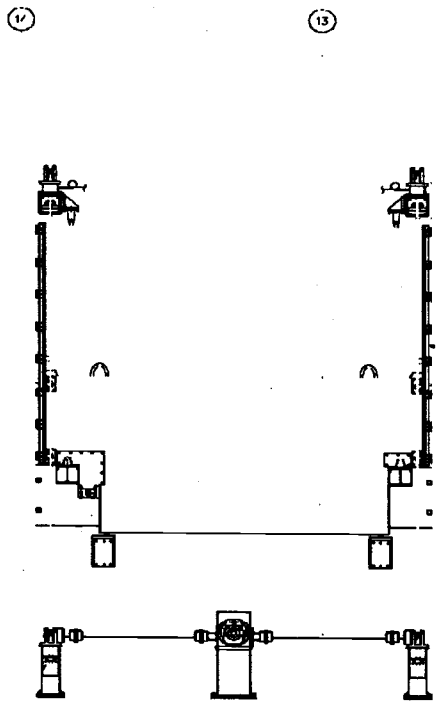

Figure 4-10 Buffer Store Crane Maintenance Shield Door

4.1.1.17 Buffer Store Maintenance Facility Crane

Plant Item Number: 24590-LAW-MJ-LPH-CRN-00001

Refer to:

24590-WTP-3PS-MJKG-T0002, *CMAA 74 Top Running and Under Running Single Girder and CMAA 70 Top Running Bridge and Gantry Type Multiple Girder EOT Cranes*
24590-CM-MRA-MJKG-00002, *Cranes, Bridge CMAA 74*
24590-CM-POA-MJKG-00002-03-01, *Drawing – 5 Ton Underhung Single Girder Crane Number 2770 General Arrangement*

The Buffer Store Maintenance Facility Crane is a 5-ton under running, single girder crane located on the ceiling of the Buffer Store Crane Maintenance Area (L-B019A) between the (+) 3 foot and (+) 28 foot elevation. The Buffer Store Maintenance Facility Crane can be accessed from a staircase leading up to a door on the west wall of room L-0106. The crane covers the area bounded by column line 12.7 and 14, and row line E and E.8. The bridge, trolley and hoist have digital radio operated electric motors. [3.5.1.2, 3.5.4.3]

The Buffer Store Maintenance Facility Crane's functional purpose is to:

- Support Buffer Store Crane maintenance operations

4.1.1.18 Master-Slave Manipulator

Plant Item Numbers: 24590-LAW-MJ-LPH-MANIP-00TBD

All four Pour Caves and the Container Rework Area contain through wall penetrations that facilitate the installation of MSMs on an as needed basis. The penetrations contain shielded wall plugs that will be removed if MSMs are required (refer to 24590-LAW-MX-M40T-00001001, *Detail of 10 1/2" Bore-20" Wall Plug*, and 24590-LAW-MX-M40T-00001002, *Wall Plug 10 1/2" Bore-20"* for details). If required, the MSM will be used to remove glass that has hardened on the outside surface of the container. Refer to 24590-WTP-3PS-M000-T0012, *Engineering Specification for Master Slave Manipulators for PTF, HLW, LAW and LAB* and 24590-QL-MRA-MJW0-00003, *ECI - Power Manipulators (MSM) L/S* for more information on MSMs. See Figure 4-11. [3.8.1.1, 3.8.1.2]

The MSM's functional purpose is to:

- Remove glass chips from outer surfaces of the container
- Release the grapple from a container should the sequencing mechanism fail to retract the jaws

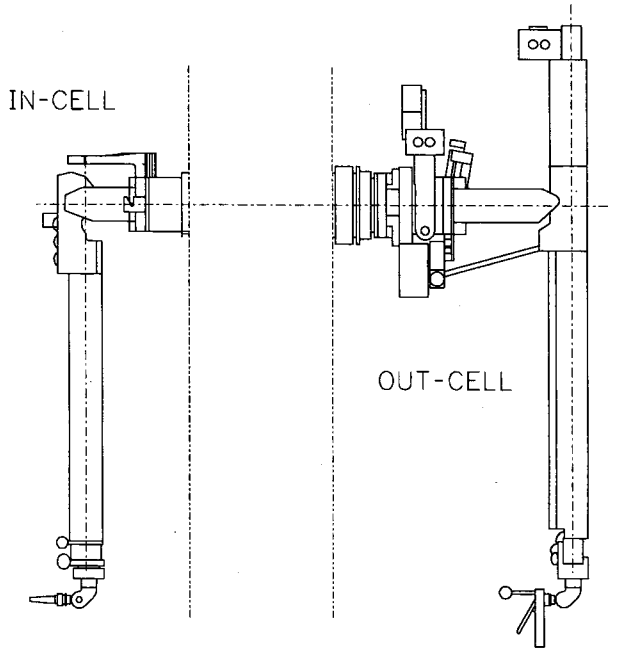

Figure 4-11 Master-Slave Manipulator

4.1.1.19 Grapples

Plant Item Numbers: 24590-LAW-FH-LPH-TOOL-00001/00002/00003/00004/00007

Refer to:

24590-WTP-3PS-MQL0-T0003, *Engineering Specification for Special Grapples and Lifting Devices*
24590-QL-MRA-FH00-00001, *Grapples Special L/DS (In Cell Containers)*
24590-QL-POA-FH00-00001-03-00009, *Drawing – LAW Container Grapple Arrangement*

The Grapples are mechanically actuated lifting devices used for transporting full or empty product containers. The Grapples are suspended from the overhead cranes and monorails. The Grapple assembly has a rated capacity of 16,500 lbs. and does not exceed the container diameter when in the disengaged configuration. The Grapples are designed to be remotely engaged and disengaged. The Grapples contain an indexing feature and status indicator that is clearly visible to the operator through shielded windows or closed circuit television (CCTV) cameras. The Grapple is equipped with an emergency means to disengage the Grapple from the load if the normal disengagement mechanism fails. The emergency release mechanism is actuated by the MSM. [3.7]

4.1.1.20 Shielded Glass Windows

Plant Item Numbers: 24590-WTP-AD-20-SWIN-00001/00002/00003/00004/00007

Refer to:

24590-WTP-3PS-MX00-T0002, *Engineering Specification for Shielded Glass Windows*
24590-QL-MRA-ADDP-00001, *Shielded, Window Lead Glass L/DS QL-2 (MH009) (VHL3) (ECI)*

The Shielded Glass Windows shield personnel from radiation sources within the Pour Caves and Container Rework Area. The Shielded Glass Windows provide wide angle viewing of the in-cave process and maintenance activities. The windows are designed for installation and service from the cold side. The windows are non-fogging with an inert gas filled system to prevent dust and moisture accumulation. There is one window for each Pour Cave that provides shielding to personnel located in the Pour Cave Airlocks (L-B011A, L-B013A, L-B015) and one window located in the Container Rework Area that provides shielding to personnel located at the Container Rework Area (LPB005). [3.4.4.5, 3.4.4.6]

The Shielded Glass Window's functional purpose is to

- Provide viewing of in-cave process and maintenance activities
- Provide shielding to personnel

4.1.1.21 Shielded Personnel Access Doors

Plant Item Numbers: 24590-LAW-AD-LPH-DOOR-00001/00002/00003/00004

Refer to:

24590-LAW-3PS-MX00-T0002, *Engineering Specification for LAW Shielded Personnel Access Doors – Common Items*
24590-CM-MRA-ADDB-00001, *LAW Shielded Personnel Access Doors – 1 In & 3 In – Commercial (MH008) (VHC5) C/DS*

LAW Shielded Personnel Access Doors allow personnel to access restricted plant areas while providing protection from radiation during normal process operations. The door provides basic sealing capability to minimize air in-flow, thus maintaining a differential pressure across the door boundary. [3.9.1.3]

The Shielded Personnel Access Doors' functional purpose is to:

- Provide shielding to personnel located in Pour Cave Airlocks from the Pour Cave
- Minimize contamination migration from the Pour Cave into the Pour Cave Airlocks
- Regulate airflow from the Pour Cave Airlocks into the Pour Caves

4.1.1.22 System Hardware and Software

The system hardware required to operate the system is shown in system block diagrams, LAW *Vitrification MH System LPH System Block Diagram Container Pour Handling System*, document numbers 24590-LAW-J1-LPH-00001/2/8/9/10/11 and 12.

4.1.1.23 Local Operator Interfaces (LOI) and Close Circuit Television (CCTV) Cameras

A permanent LOI is located in the viewing area for the Container Rework Turntable. LOIs are designed with standardized operator controls to avoid human errors that might occur from an operator moving from one LOI to another.

Each LOI has access to the local CCTV Cameras. The location of each CCTV camera and LOI is shown in drawing 24590-LAW-J0-PTJ-00001, *LAW Vitrification System PTJ Supplemental Instrumentation Diagram CCTV Equipment at El. -21 FT - 0 in.* There are ten through wall fixed view cameras and ten PTZ wall mounted cameras. The cameras enable personnel to view and identify the container handling operations for System LPH.

4.1.2 Boundaries and Interfaces

4.1.2.1 Interfaces

4.1.2.1.1 LAW System LRH - Container Receipt Handling

System LRH imports new empty containers, on the (+) 3'-0" elevation, to the Container Transport Bogies located on the (-) 21'-0" elevation of system LPH. System LRH has two import lines that interface with the north and south lines in the Container Transfer Corridor.

4.1.2.1.2 LAW System LMP - Melter Process

System LMP fills empty product containers with the glass/waste mixture. This operation takes place when the container is raised by the system LPH Container Elevator, to the LMP Melter Seal Head. Refer to 24590-LAW-3PS-AE00-T0001, *Engineering Specification for Low Activity Waste Melters*, for details on the LAW Melter.

4.1.2.1.3 LAW System LFH - Container Finishing Handling

System LFH exports full product containers from the export positions of System LPH, located on the (-) 21'-0" elevation, to the sampling stations on (+) 3'-0" elevation. System LFH has two export lines that interface with the north and south lines in the Transfer Corridor.

4.1.2.1.4 LAW System LMH - Melter Handling

The physical boundaries of System LPH and System LMH are separated by two melter decontamination hatches (provided by CS&A, Civil Structural & Architectural). The hatches are located in System LMH's C1/C2 Airlock (room L-0113) at the (+) 3'-0" elevation; one centered on column line 5, and one centered on column line 8 and between column lines J and K. Each hatch consists of three separate plates that provide passage for the introduction of the Monorail Hoist and replacement Container Turntable parts. Parts and equipment will be entering to or exiting from the LPH System in the Monorail Maintenance Areas, (room L-B023A or room L-B023B) at the (-) 21'-0" elevation (see drawings 24590-LAW-P1-P23T-00023, *LAW Vitrification Building Equipment Location Plan EL. 3'-0"/Area 16* and 24590-LAW-P1-P23T-00024, *LAW Vitrification Building Equipment Location Plan EL. 3'-0"/Area 17*).

4.1.2.1.5 WTP System ISA - Plant Instrument Service Air

System ISA supplies air to the Buffer Store Crane to cool the crane mounted cameras and the laser positioning device. The air lines are capable of supplying 10 cubic feet per minute flow at 90 to 150 psig (pounds per square inch gage). Also refer to 24590-LAW-M6-ISA-00001001, *P&ID - LAW Instrument Service Air System Distribution at EL -21 FT -0 IN* and 24590-LAW-P3-ISA-GL01725003, *ISA-GL-01725-S10A-0.75 - LAW Vitrification Building Isometric.*

4.1.2.1.6 WTP System PCW - Plant Cooling Water

The Container Turntable has a special cooling jacket to protect the concrete floor. The cooling jacket interfaces with the Plant Water; water flows through the jacket and removes heat from the base of the Container Turntable near the concrete floor. Also refer to 24590-WTP-3YD-PCW-00001, Section 6.3.2.10, P&IDs 24590-LAW-M6-PCW-00010001, 24590-LAW-M6-PCW-00010002, 24590-LAW-M6-PCW-00014001, and 24590-LAW-M6-PCW-00014002 and data sheet 24590-LAW-M6D-PCW-00002.

4.1.2.1.7 WTP System PTJ - Process and Mechanical Handling CCTV Systems

System PTJ provides the means of remote viewing and monitoring the process areas. PTJ is used by operations and maintenance personnel to monitor maintenance activities and mechanical handling operations within the Pour Caves and the Container Transfer Corridor. The location of each CCTV camera and LOI is shown in drawing 24590-LAW-J0-PTJ-00001, *LAW Vitrification System PTJ Supplemental Instrumentation Diagram CCTV Equipment at El. -21 FT - 0 in.*

4.1.2.1.8 WTP System LVE - Low-Voltage Power Distribution

System LVE supplies electrical power to the LPH equipment and instruments.

4.1.2.1.9 WTP System LTE - Lighting

System LTE receives power from System LVE and provides illumination in C3 and C5 areas that complies with IESNA Standard RP-7.

4.1.2.1.10 WTP System MHJ - Mechanical Handling Control

The Mechanical Handling Control System provides the following non-safety monitoring and control functions:

- Sequence control of discrete mechanical handling equipment
- Device interlocks
- Control of process functions integral to the mechanical handling system
- Control of package-supplied equipment

4.1.3 Physical Layout and Location

Table 4-1 Equipment Layout and Location

Equipment Name	Equipment Number	Location / Layout
Container Transport Bogie	24590-LAW-MQ-LPH-TRLY-00001/00002	Runs east/west between column lines 2 and 14. Areas L-B025A and L-B025B.
Bogie Maintenance Confinement Doors	24590-LAW-AD-LPH-DOOR-00008/00027	Between column lines 2 and 3. Separates areas L-B025B and L-B025A.
Bogie Recovery System		Spans column lines 2 through 14. Winch at West edge of L-B025A. Drag block at east end of Bogie rails.
Bogie Maintenance Hoist	24590-LAW-MJ-LPH-HST-00007	Area L-B025A, runs north/south.
Pour Cave Monorail Hoists	24590-LAW-MJ-LPH-HST-00001	There is one Monorail Hoist for each Pour Cave. Between column lines 4 and 5. Runs from L-B015A to LPB023A.
	24590-LAW-MJ-LPH-HST-00002	Between column lines 5 and 6. Runs from L-B013C to LPB023A.
	24590-LAW-MJ-LPH-HST-00003	Between column lines 7 and 8. Runs from L-B013B to LPB023B.
	24590-LAW-MJ-LPH-HST-00004	Between column lines 8 and 9. Runs from L-B011C to LPB023B.

Table 4-1 Equipment Layout and Location		
Equipment Name	**Equipment Number**	**Location / Layout**
Container Park Stands	24590-LAW-MH-LPH-MHAN-00040 through -00061	In front of each Monorail Maintenance Shield Door is one Stand. The Buffer Store Area (L-B025C) contains 12 stands and the Rework Area (L-B025D) has 3 stands.
Monorail Maintenance Shield Doors	24590-LAW-AD-LPH-DOOR-00011	Between column lines 4 and 5. Separating areas L-B025B and LPB023A.
	24590-LAW-AD-LPH-DOOR-00012	Between column lines 5 and 6. Separating areas L-B025B and LPB023A.
	24590-LAW-AD-LPH-DOOR-00020	Between column lines 7 and 8. Separating areas L-B025B and LPB023B.
	24590-LAW-AD-LPH-DOOR-00021	Between column lines 8 and 9. Separating areas L-B025B and LPB023B.
Pour Cave Shield Doors	24590-LAW-AD-LPH-DOOR-00009	Between column lines 4 and 5. Separating areas L-B025B and L-B015A.
	24590-LAW-AD-LPH-DOOR-00010	Between column lines 5 and 6. Separating areas L-B025B and L-B013C.
	24590-LAW-AD-LPH-DOOR-00016	Between column lines 7 and 8. Separating areas L-B025B and L-B013B.
	24590-LAW-AD-LPH-DOOR-00017	Between column lines 8 and 9. Separating areas L-B025B and L-B011C.
Container Turntables	24590-LAW-MJ-LPH-TTBL-00001/00002/00003/00004	Inside each Pour Cave. L-B015A, L-B013C, L-B013B, L-B011C.
Container Lower Overpacks		One for each position of the Container Turntable in each Pour Cave. B015A, L-B013C, L-B013B, L-B011C.
Container Elevators	24590-LAW-AC-LPH-ELEV-00001/00002/00003/00004	Inside each Pour Cave. L-B015A, L-B013C, L-B013B, L-B011C.
Transfer Corridor Shield Door	24590-LAW-AD-LPH-DOOR-00024	Between column lines 13 and 14. Separating areas L-B025C and L-B025B.
	24590-LAW-AD-LPH-DOOR-00026	Between column lines 13 and 14. Separating areas L-B025B and L-B025D.
Container Export Stands	24590-LAW-MH-LPH-MHAN-00019/00020	Between the rails on both the north and south container transfer lines at the east end of the rails.
Container Rework Turntable		Container Rework Area, L-B025D.

Table 4-1 Equipment Layout and Location		
Equipment Name	**Equipment Number**	**Location / Layout**
Buffer Store Crane	24590-LAW-MJ-LPH-CRN-00002	Between column lines 12.7 and 14. Service areas include L-B019A, L-B025C, L-B025B, and L-B025D.
Buffer Store Crane Maintenance Shield Door	24590-LAW-AD-LPH-DOOR-00025	Between column lines 12.7 and 14. Separates areas L-B019A and L-B025C.
Buffer Store Maintenance Facility Crane	24590-LAW-MJ-LPH-CRN-00001	Between column lines 12.7 and 14. Area L-B019A.
Master-Slave Manipulator		Installed as needed. West wall of Pour Cave L-B015A. East wall of Pour Cave L-B013C. West wall of Pour Cave L-B013B. East wall of Pour Cave L-B011C. East wall of Container Rework Area, L-B025D.
Grapples	24590-LAW-FH-LPH-TOOL-00001/00002/00003/00004/00007	Grapples are mounted to each Pour Cave Monorail Hoist and to the Buffer Store Crane.
Shielded Glass Windows	24590-WTP-AD-20-SWIN-00001	West wall of Pour Cave L-B015A.
	24590-WTP-AD-20-SWIN-00002	East wall of Pour Cave L-B013C.
	24590-WTP-AD-20-SWIN-00003	West wall of Pour Cave L-B013B.
	24590-WTP-AD-20-SWIN-00004	East wall of Pour Cave L-B011C.
	24590-WTP-AD-20-SWIN-00007	East wall of Container Rework Area, L-B025D.
Shielded Personnel Access Doors	24590-LAW-AD-LPH-DOOR-00001	West wall of Pour Cave L-B015A.
	24590-LAW-AD-LPH-DOOR-00002	East wall of Pour Cave L-B013C.
	24590-LAW-AD-LPH-DOOR-00003	West wall of Pour Cave L-B013B.
	24590-LAW-AD-LPH-DOOR-00004	East wall of Pour Cave L-B011C.
LOI and CCTV Cameras		24590-LAW-J0-PTJ-00001, *LAW Vitrification System PTJ Supplemental Instrumentation Diagram CCTV Equipment at El. -21 FT - 0 in*

4.1.4 Principles of Operation

4.1.4.1 Pour Caves (L-B011C, L-B013B, L-B013C and L-B015A) (R5/R3/C5)

The Pour Caves are located in the (-) 21 elevation. In each of the four Pour Caves reside one turntable and one elevator. The turntables will index the containers from the import/export, to the filling, and to the cooling positions. The elevator will raise and lower the container at the filling position. The pour caves can be accessed from the Pour Cave Airlocks (R3/C2) through shielded personnel access doors for maintenance. The Pour Caves are equipped with alpha and beta continuous air monitors (CAM) to detect contamination, warn personnel in the

immediate vicinity and record contamination levels for retrospective analysis. The location of CAMs and sample penetrations are identified on drawing 24590-LAW-J0-EMJ-00001, *LAW Vitrification System EMJ Supplemental Instrument Diagram CAM's Plan at EL. -21'-0"*.

4.1.4.2 Pour Cave Airlocks (L-B011A, L-B013A, L-B015) (R3/C2)

The Pour Cave Airlocks are located adjacent to the Pour Caves (R5/R3/C5) on the (-) 21 elevation. The Pour Cave Airlocks are equipped with MSM penetrations and shielded glass windows to facilitate maintenance and operations. MSMs will be installed or removed as needed (see Section 4.1.1.19). The Pour Cave Airlocks are equipped with alpha and beta continuous air monitors (CAM) to detect contamination, warn personnel in the immediate vicinity and record contamination levels for retrospective analysis. The location of CAMs and sample penetrations are identified on 24590-LAW-J0-EMJ-00001, *LAW Vitrification System EMJ Supplemental Instrument Diagram CAM's Plan at EL. -21'-0"*.

4.1.4.3 Container Buffer Storage Area (L-B025C) (R5/R3/C5)

The Container Buffer Storage Area is located on the (-) 21 elevation. It will store ILAW containers after they are filled with glass and prior to being transported to the finishing line. The Container Buffer Storage Area is equipped with 12 park stands. The containers are stored unstacked 4 to 16 inches apart.

4.1.4.4 Buffer Store Crane Maintenance Area (L-B019A) (R3/C3)

A Buffer Store Crane Maintenance Area (L-B019A) is located to the north of the Container Buffer Store Area (L-B025C) (R5/R3/C5). The Buffer Store Crane Maintenance Area is equipped with a maintenance crane used to perform maintenance or repair services on the Buffer Store Crane (LPH-CRN-00002). A portable CAM will be used in the Buffer Store Crane Maintenance Area. The location of CAMs and sample penetrations are identified on 24590-LAW-J0-EMJ-00001, *LAW Vitrification System EMJ Supplemental Instrument Diagram CAM's Plan at EL. -21'-0"*.

4.1.4.5 Container Transfer Corridor (L-B025B) (R5/R3/C5)

The Container Transfer Corridor is located in the (-) 21 elevation. The Container Transfer Corridor contains two Transport Bogie lines, north and south, each having the capability of servicing four Pour Caves (L-B011C, L-B013B, L-B013C and L-B015A) (R5/R3/C5). The Transport Bogies run east and west from the import position (West end of L-B025B), through the Container Transfer Corridor (L-B025B) to the Pour Caves, and to the export position (East end of L-B025B).

4.1.4.6 Bogie Maintenance Area (L-B025A) (R3/C3)

The Bogie Maintenance Area is located on the West end of the Container Transfer Corridor (L-B025B) (R5/R3/C5) on the (-) 21 elevation. One Bogie Maintenance area (L-B025A) services both the North and South lines. It is equipped with a maintenance crane to facilitate maintenance operations on the Transport Bogies. The Container Transfer Corridor and Bogie Maintenance Area is separated by a containment door. The Bogie Maintenance Area is equipped with alpha and beta continuous air monitors (CAM) to detect contamination, warn personnel in the immediate vicinity and record contamination levels for retrospective analysis. The location of CAMs and sample penetrations are identified on 24590-LAW-J0-EMJ-00001, *LAW Vitrification System EMJ Supplemental Instrument Diagram CAM's Plan at EL. -21'-0"*.

4.1.4.7 Monorail Maintenance Area (L-B023A and L-B023B) (R3/C3)

System LPH has four Monorail Hoists; one each will provide service to the Pour Caves. The Monorail Hoists transfer empty and full containers between the north and south container transfer lines and the import/export position of the turntables. System LPH has two separate Monorail Maintenance rooms (L-B023A and L-B023B). The Monorail Hoist Maintenance rooms are located South of the Pour Caves and service two Monorail Hoists for the respective Pour Caves. The Monorail Maintenance Areas contain sample penetrations for CAMs. The location of the sample penetrations are identified on 24590-LAW-J0-EMJ-00001, *LAW Vitrification System EMJ Supplemental Instrument Diagram CAM's Plan at EL. -21'-0"*.

Equipment requiring maintenance or repair can be imported or exported through the Monorail Maintenance Area using the 10-ton monorail. If required, the Melter Decontamination Hatches (Provided by CS&A) (see drawings 24590-LAW-P1-P23T-00023, *LAW Vitrification Building Equipment Location Plan EL. 3'-0"/Area 16* and 24590-LAW-P1-P23T-00024, *LAW Vitrification Building Equipment Location Plan EL. 3'-0"/Area 17*) can be removed allow replacement equipment to be imported and damaged equipment to be removed for disposal. The equipment requiring disposal is relocated to (+) 3 foot elevation for export.

4.1.4.8 Container Rework Area (L-B025D) (R5/R3/C5)

System LPH has a Container Rework Area (L-B025D) that provides for storage and rework capabilities of the containers. The rework area is located on the South end of the Container Buffer Storage Area on the (-) 21 elevation. The Buffer Store Crane (LPH-CRN-00002) moves full containers between the north and south container transfer lines and the Container rework area. If a container is over-filled with glass the container is transferred to the container rework area to remove excess glass. If the container is deemed acceptable, it is moved to the container buffer store, L-B025C, for temporary storage of the container until it is sent up to the finish line. The Container Rework Area is equipped with MSM penetrations and a shielded glass window to facilitate rework operations. MSMs will be installed as needed (see Section 4.1.1.19). The Container Rework area contains 3 container park stands. The Container Rework area also includes a reserved space for a rework turntable that will be procured on an as needed basis (see Section 4.1.1.14). Refer to 24590-LAW-P1-P23T-00007, *LAW Vitrification Building Equipment Location Plan EL. (-) 21'-0"/Area 6,* for the location of the Container Rework Area.

4.1.5 System Reliability Features

TBD

4.1.6 System Control Features

4.1.6.1 Remote Continuous Controls

Table 4-2 Remote Status Indications for LAW LPH System

Equipment No.	Instrument No.	SAI*	Function (CSR**)	Remarks
LPH-CRN-00002	LPH-WI-6825	-	LPH-CRN-00002 Hoist Weight (LPH-WT-6825)	
	LPH-SDI-6801	-	LPH-CRN-00002 Bridge Speed Deviation (LPH-JZ-6801 & -6831)	
	LPH-SDI-6810	-	LPH-CRN-00002 Trolley Speed Deviation (LPH-JZ-6810 & -6811)	
LPH-DOOR-00025	LPH-WDI-7112	-	LPH-DOOR-00002 Door Weight Deviation (LPH-WT-7112 & 7113)	
	LPH-SI-7104	-	LPH-DOOR-00025 Door Speed (LPH-QT-7104)	
	LPH-ZI-7104	-	LPH-DOOR-00025 Door Position (LPH-QT-7104)	
LPH-ELEV-00001	LPH-QDI-3509	-	LPH-ELEV-00001 Position	

Table 4-2 Remote Status Indications for LAW LPH System				
Equipment No.	**Instrument No.**	**SAI***	**Function (CSR**)**	**Remarks**
			Deviation (LPH-QT-3509 & 3513)	
	LPH-WI-3505		LPH-ELEV-00001 Elevator Weight (LPH-WT-3505)	
LPH-ELEV-00002	LPH-QDI-4009	-	LPH-ELEV-00002 Position Deviation (LPH-QT-4009 & 4013)	
	LPH-WI-4005		LPH-ELEV-00002 Elevator Weight (LPH-WT-4005)	
LPH-ELEV-00003	LPH-QDI-4609	-	LPH-ELEV-00003 Position Deviation (LPH-QT-4609 & 4613)	
	LPH-WI-4605		LPH-ELEV-00003 Elevator Weight (LPH-WT-4605)	
LPH-ELEV-00004	LPH-QDI-5209	-	LPH-ELEV-00004 Position Deviation (LPH-QT-5209 & 5213)	
	LPH-WI-5205		LPH-ELEV-00004 Elevator Weight (LPH-WT-5205)	
_	LPH-TI-8301	_	North Line Container Surface Temperature (LPH-TT-8301)	
_	LPH-TI-8302	_	South Line Container Surface Temperature (LPH-TT-8302)	

* SAI – Safety Affecting Instrumentation
** CSR – Control System Requirement

4.1.6.2 Remote Discrete Controls

There is no Discrete (On/Off) Control for the LAW LPH System

4.1.6.3 Trips and Interlocks

Refer to 24590-LAW-M1-LPH-00001, *Mechanical Sequence Diagram (MSD) for LAW Vitrification System LPH MSD Detailing LAW Container Pour Handling* for interlocks, permissives, instruments, and controls.

4.1.6.4 Packaged Equipment Local Control Only

Local controls associated with LPH system packaged equipment are identified in table 4.1.6-2.

Table 4-3 Packaged Equipment Local Controls

Equipment #	Instrument #	SAI	Function
LPH-CRN-00002	Refer to vendor operating manual 24590-CM-POA-MJKG-00003-17-00005	Not applicable	Refer to vendor operating manual 24590-CM-POA-MJKG-00003-17-00005
LPH-ELEV-00001 thru -00004	Refer to vendor operating manual 24590-CM-POA-MJW0-00001-11-00001	Not applicable	Refer to vendor operating manual 24590-CM-POA-MJW0-00001-11-00001
LPH-TTBL-00001 thru -00004	Refer to vendor operating manual 24590-CM-POA-MJW0-00001-11-00001	Not applicable	Refer to vendor operating manual 24590-CM-POA-MJW0-00001-11-00001
LPH-DOOR-00017	Refer to vendor operating manual 24590-CM-POA-ADDH-00005-02-04	Not applicable	Refer to vendor operating manual 24590-CM-POA-ADDH-00005-02-04
LPH-DOOR-00025	Refer to vendor operating manual 24590-CM-POA-ADDH-00002-02-00002	Not applicable	Refer to vendor operating manual 24590-CM-POA-ADDH-00002-02-00002
LPH-HST-00001 thru -00004	Refer to vendor operating manual 24590-CM-POA-MJKH-00001-14-00009, -00010, -00011, & -00013	Not applicable	Refer to vendor operating manual 24590-CM-POA-MJKH-00001-14-00009, -00010, -00011, & -00013
LPH-TRLY-00001 & -00002	Refer to vendor operating manual 24590-CM-POA-MQTS-00001-02-00003	Not applicable	Refer to vendor operating manual 24590-CM-POA-MQTS-00001-02-00003

4.1.6.5 Complex Control Schemes

The LPH equipment is operated on demand, therefore; there are no complex control schemes.

4.2 Operations

RESERVED

4.2.1 Initial Configuration (Pre-startup)

RESERVED

4.2.2 System Startup

RESERVED

4.2.3 Normal Operations

RESERVED

4.2.4 Off-Normal Operations

RESERVED

4.2.5 System Shutdown

RESERVED

4.2.6 Safety Management and Administrative Controls

RESERVED

4.3 Testing and Maintenance

RESERVED

4.3.1 Temporary Configurations

RESERVED

4.3.2 TSR-Required Surveillances

RESERVED

4.3.3 Non-TSR Inspections and Testing

RESERVED

4.3.4 Maintenance

RESERVED

4.4 Supplemental Information

RESERVED

5 References and Design Documents List

5.1 Source / Basis References

Document Number	Rev	Title	Text Reference
24590-WTP-DB-ENG-01-001	2	*Basis of Design*	BOD
24590-WTP-ICD-MG-01-015	3	*ICD 15 – Interface Control Document for Immobilized Low-Activity Waste*	ICD 15
24590-WTP-RPT-OP-01-001	5	*Operations Requirements Document*	ORD
24590-WTP-PSAR-ESH-01-002-03	5J	*Preliminary Documented Safety Analysis to Support Construction Authorization; LAW Facility Specific Information*	PDSA- LAW Facility
24590-WTP-SRD-ESH-01-001-02	7F	*Safety Requirements Document, Volume II*	SRD
DE-AC27-01RV14136	M339	*DOE/BNI WTP Contract Mod No. 339, Section C – Statement of Work*	WTP Contract

5.2 Other References

Document Number	Rev	Title
24590-WTP-GPG-ENG-0161	000	*Technical Requirements Management*
24590-LAW-U0D-W16T-00001	002	*LAW Room Environment Data Sheet*
24590-WTP-3PS-JQ00-T0004	001	*Management of Supplier Software*
24590-WTP-GPG-ENG-033	002	*Evaluation for Seismic Interaction Effects*
24590-WTP-PL-RACT-RT-0001	000	*WTP Remotability Verification Plan*
Engineering Specifications		
24590-WTP-3PS-MJKG-T0002	008	*Engineering Specification for CMAA 74 Top Running & Under Running Single Girder & CMAA 70 Top Running Bridge & Gantry Type Multiple Girder EOT Cranes*
24590-WTP-3PS-MJKH-T0001	005	*Engineering Specification for Commercial Quality Monorail Hoists, Jib Cranes, and Under Running Single Girder Cranes*
24590-WTP-3PS-MJKH-T0002	003	*Engineering Specification for Process Monorail Hoists*
24590-WTP-3PS-M000-T0012	002	*Engineering Specification for Master Slave Manipulators for PTF, HLW, LAW and LAB*
General Arrangement & Equipment Location Drawings		
24590-LAW-J0-EMJ-00001	004	*LAW Vitrification System EMJ Supplemental Instrumentation Diagram CAMs and ARMs Plan at EL (-)21'-0"*
24590-LAW-J0-EMJ-00002	003	*LAW Vitrification System EMJ Supplemental Instrumentation Diagram CAMs and ARMs Plan at EL 3'-0"*
24590-LAW-J0-PTJ-00001	001	*LAW Vitrification System PTJ Supplemental Instrumentation Diagram CCTV Equipment Plan at EL (-)21'-0"*
24590-LAW-J0-PTJ-00002	000	*LAW Vitrification System PTJ Supplemental Instrumentation Diagram CCTV Equipment Plan at EL 3'-0"*
24590-LAW-M6-ISA-00001001	000	*P&ID – LAW Instrument Service Air System Distribution at EL (-)21'-0"*
24590-LAW-M6-PCW-00010001	000	*P&ID – LAW Plant Cooling Water System Melter 1 Pour Cave Pipe Manifold Cooling Panels*
24590-LAW-M6-PCW-00010002	000	*P&ID – LAW Plant Cooling Water System Melter 1 Pour Cave Pipe Manifold Cooling Panels*
24590-LAW-M6-PCW-00014001	000	*P&ID – LAW Plant Cooling Water System Melter 2 Pour Cave Pipe Manifold Cooling Panels*
24590-LAW-M6-PCW-00014002	000	*P&ID – LAW Plant Cooling Water System Melter 2 Pour Cave Pipe Manifold Cooling Panels*
LPH Equipment Vendor Documents		
24590-CM-POA-ADDH-00005-06-16	00B	*Drawings – LAW Maintenance Shield Doors, Door General Assembly*
24590-CM-POA-ADDH-00005-06-82	00C	*Drawings – LAW Maintenance Shield Doors – Door General Assembly, Monorail Maintenance LPH-DOOR-00011*
24590-CM-POA-ADDH-00005-06-57	00C	*Drawings – LAW Maintenance Shield Doors – Door General Assembly, Monorail Maintenance LPH-DOOR-00012*
24590-CM-POA-ADDH-00005-06-58	00C	*Drawings – LAW Maintenance Shield Doors – Door General Assembly, Monorail Maintenance LPH-DOOR-00020*
24590-CM-POA-ADDH-00005-06-59	00C	*Drawings – LAW Maintenance Shield Doors – Door General Assembly, Monorail Maintenance LPH-DOOR-00021*

24590-CM-POA-MJW0-00001-03-55	00D	*Drawing – LAW Pour Caves Turntable and Elevator – Turntable Assembly, Left Hand*
24590-CM-POA-MJW0-00001-03-56	00D	*Drawing – LAW Pour Caves Turntable and Elevator – Turntable Assembly, Right Hand*
24590-CM-POA-MJW0-00001-03-83	00G	*Drawing – Turntable Drive Cassette Assembly*
24590-CM-POA-MJW0-00001-03-84	00D	*Drawing – Turntable Drive Cassette Assembly*
24590-CM-POA-MJW0-00001-03-85	00D	*Drawing – Turntable Drive Cassette Assembly*
24590-CM-POA-MJW0-00001-03-87	00B	*Drawing – Turntable Rotary Lock Assembly*
24590-CM-POA-MJW0-00001-03-91	00C	*Drawing – LAW Pour Caves Turntable and Elevator – Turntable Position Detection Assembly*
24590-CM-POA-MJW0-00001-03-92	00B	*Drawing – Locking Pin/Position Detection Penetration Assembly*
24590-CM-POA-MJW0-00001-03-47	00E	*Drawing – LAW Pour Caves and Turntable – Elevator Assembly*
24590-CM-POA-MJW0-00001-03-48	00C	*Drawing – LAW Pour Caves and Turntable – Elevator Assembly*
24590-CM-POA-MJW0-00001-03-49	00C	*Drawing – LAW Pour Caves and Turntable – Elevator Assembly*
24590-CM-POA-MJW0-00001-03-50	00D	*Drawing – LAW Pour Caves and Turntable – Elevator Assembly*
Architectural Documents		
24590-LAW-AD-A18T-05100001	005	*LAW Vitrification Building Architectural Door Schedule EL (-)21'-0"*
24590-LAW-AD-A18T-05101001	010	*LAW Vitrification Building Architectural Door Schedule EL 0'-0" & 3'-0"*
24590-LAW-A1-A10T-01100001	005	*LAW Vitrification Building Architectural Floor Plan EL (-)21'-0"*

5.3 System Design Documents

Document Number	Title
Mechanical Handling Diagrams	
24590-LAW-M7-LPH-00001001	*LAW Vitrification System LPH Mechanical Handling Diagram Container Pour Handling System*
24590-LAW-M7-LPH-00001002	*LAW Vitrification System LPH Mechanical Handling Diagram Container Pour Handling System*
24590-LAW-M7-LPH-00001003	*LAW Vitrification System LPH Mechanical Handling Diagram Container Pour Handling System*
24590-LAW-M7-LPH-00001004	*LAW Vitrification System LPH Mechanical Handling Diagram Container Pour Handling System*
24590-LAW-M7-LPH-00001005	*LAW Vitrification System LPH Mechanical Handling Diagram Container Pour Handling System*
24590-LAW-M7-LPH-00001006	*LAW Vitrification System LPH Mechanical Handling Diagram Container Pour Handling System*
24590-LAW-M7-LPH-00001007	*LAW Vitrification System LPH Mechanical Handling Diagram Container Pour Handling System*
24590-LAW-M7-LPH-00001008	*LAW Vitrification System LPH Mechanical Handling Diagram Container Pour Handling System*
24590-LAW-M7-LPH-00001009	*LAW Vitrification System LPH Mechanical Handling Diagram Container Pour Handling System*
24590-LAW-M7-LPH-00001010	*LAW Vitrification System LPH Mechanical Handling Diagram Container Pour Handling System*
24590-LAW-M7-LPH-00001011	*LAW Vitrification System LPH Mechanical Handling Diagram Container Pour Handling System*
24590-LAW-M7-LPH-00001012	*LAW Vitrification System LPH Mechanical Handling Diagram Container Pour Handling System*
24590-LAW-M7-LPH-00001013	*LAW Vitrification System LPH Mechanical Handling Diagram Container Pour Handling System*
24590-LAW-M7-LPH-00001018	*LAW Vitrification System LPH Mechanical Handling Diagram Container Pour Handling System*
24590-LAW-M7-LPH-00001019	*LAW Vitrification System LPH Mechanical Handling Diagram Container Pour Handling System*
24590-LAW-M7-LPH-00001021	*LAW Vitrification System LPH Mechanical Handling Diagram Container Pour Handling System*
24590-LAW-M7-LPH-00001022	*LAW Vitrification System LPH Mechanical Handling Diagram Container Pour Handling System*
24590-LAW-M7-LPH-00001023	*LAW Vitrification System LPH Mechanical Handling Diagram Component Identification Tabulation*
24590-LAW-M7-LPH-00001024	*LAW Vitrification System LPH Mechanical Handling Diagram Component Identification Tabulation*
General Arrangement/Equipment Location Drawings	
24590-LAW-P1-P01T-00001	*LAW Vitrification Building General Arrangement Plan at El. (-)21'- 0"*
24590-LAW-P1-P01T-00002	*LAW Vitrification Building General Arrangement Plan EL. 3'-0"*
24590-LAW-P1-P23T-00005	*LAW Vitrification Building Equipment Location Plan EL. (-)21'-0" / Area 4*
24590-LAW-P1-P23T-00006	*LAW Vitrification Building Equipment Location Plan EL. (-)21'-0" / Area 5*
24590-LAW-P1-P23T-00007	*LAW Vitrification Building Equipment Location Plan EL. (-)21'-0" / Area 6*
24590-LAW-P1-P23T-00023	*LAW Vitrification Building Equipment Location Plan EL. 3'-0" / Area 16*
24590-LAW-P1-P23T-00024	*LAW Vitrification Building Equipment Location Plan EL. 3'-0" / Area 17*
24590-LAW-P1-P23T-00039	*LAW Vitrification Building Equipment Location Plan EL. 28'-0" / Area 2*
Design Proposal Drawings	
24590-LAW-M0-LPH-00001001	*LAW Vitrification System LPH Design Proposal Drawing Container Park/Export Stand*
24590-LAW-M0-LPH-00002001	*LAW Vitrification System LPH Design Proposal Drawing Bogie Maintenance Doors*
24590-LAW-M0-LPH-00003001	*LAW Vitrification System LPH Design Proposal Drawing Container Transport Bogie Arrangement*
24590-LAW-M0-LPH-00004001	*LAW Vitrification System LPH Design Proposal Drawing Monorail Maintenance Shield Doors*

Document Number	Title
24590-LAW-M0-LPH-00006001	*LAW Vitrification System LPH Design Proposal Drawing Pour Cave Shield Doors*
24590-LAW-M0-LPH-00006002	*LAW Vitrification System LPH Design Proposal Drawing Pour Cave Shield Doors*
24590-LAW-M0-LPH-00006003	*LAW Vitrification System LPH Design Proposal Drawing Pour Cave Shield Doors*
24590-LAW-M0-LPH-00010001	*LAW Vitrification System LPH Design Proposal Drawing Pour Cave Turntable*
24590-LAW-M0-LPH-00010009	*LAW Vitrification System LPH Pour Cave Turntable Lower Over Pack Modification*
24590-LAW-M0-LPH-00011001	*LAW Vitrification System LPH Design Proposal Drawing Container Elevator Arrangement*
24590-LAW-M0-LPH-00011002	*LAW Vitrification System LPH Pour Cave Elevator Lifting Platform Modifications*
24590-LAW-M0-LPH-00012001	*LAW Vitrification System LPH Design Proposal Drawing Transfer Corridor Shield Door (South)*
24590-LAW-M0-LPH-00013001	*LAW Vitrification System LPH Design Proposal Drawing Transfer Corridor Shield Door (North)*
24590-LAW-M0-LPH-00014001	*LAW Vitrification System LPH Design Proposal Drawing Buffer Store Crane*
24590-LAW-M0-LPH-00017001	*LAW Vitrification System LPH Design Proposal Drawing Bogie Recovery System*
24590-LAW-M0-LPH-00026	*LAW Vitrification System LPH Design Proposal Drawing Container Transport Bogie*
24590-LAW-M0-LPH-00030	*LAW Vitrification System LPH Pour Cave Lower Overpack Container Support Ring Modifications*
Engineering Specifications	
24590-LAW-3PS-ADDM-T0001	*Engineering Specification for LAW Crane Maintenance Shield Doors*
24590-LAW-3PS-ADDM-T0003	*Engineering Specification for LAW Bogie and Monorail Shield Doors*
24590-LAW-3PS-MJT0-T0002	*Engineering Specification for LAW Pour Cave Turntable and Elevator Equipment*
24590-LAW-3PS-MQLL-T0001	*Engineering Specification for LAW Container Stands/Bogie Shutters*
24590-LAW-3PS-MX00-T0002	*Engineering Specification for LAW Shielded Personnel Access Doors – Common Items*
24590-WTP-3PS-MQR0-T0003	*Engineering Specification for LAW and PTF Bogies*
24590-WTP-3PS-MQL0-T0003	*Engineering Specification for Special Grapples and Lifting Devices*
24590-WTP-3PS-MX00-T0002	*Engineering Specification for Shielded Glass Windows*
Material Requisitions	
24590-CM-MRA-ADDB-00001-01	*LAW Shielded Personnel Access Doors – 1" & 3" – Commercial (MH008) (VHC5) C/DS*
24590-CM-MRA-ADDH-00002	*Shield Doors, Decontamination, Maintenance Crane C/DS (MH005) (VHC4)*
24590-CM-MRA-ADDH-00005	*Shield Doors Standardized Bogie Maintenance C/DS*
24590-CM-MRA-MJKG-00002	*Cranes, Bridge CMAA 74*
24590-CM-MRA-MJKG-00003	*CMAA 70 Commercial Grade Cranes (MH018) (VHCA)*
24590-CM-MRA-MJKH-00001	*Monorail Hoists Standardized High Integrity C/DS*
24590-CM-MRA-MJKH-00002	*Monorail Hoists, Jib Cranes, Under-Running Single Commercial C/S (MH013) (VHC8)*
24590-CM-MRA-MJW0-00001	*LAW Pour Caves (Includes Turntable and Elevator) C/DS*
24590-CM-MRA-MQTS-00001	*Bogies Standardized C/DS*
Calculations	
24590-LAW-M4C-C5V-00001	*CFD Analysis of LAW Pour Caves (with additional cooling) and Finish Lines*
Architectural Documents	
24590-LAW-AD-A18T-05100001	*LAW Vitrification Building Architectural Door Schedule EL (-)21'-0"*

Document Number	Title
24590-LAW-AD-A18T-05101001	*LAW Vitrification Building Architectural Door Schedule EL 0'-0" & 3'-0"*
24590-LAW-A1-A10T-01100001	*LAW Vitrification Building Architectural Floor Plan EL (-)21'-0"*
24590-LAW-A5-A19T-05200001	*LAW Vitrification Building Architectural Room Finish Schedule*

Appendix A – Test Objectives, Conditions, and Acceptance Criteria

NOTE: Demonstrations and Tests identified in this appendix are preliminary, pending completion of design activities. They are established to document the flowdown of verification needs established in Section 3 but are not sufficiently detailed for development of specific system and equipment test plans. They may be used for general planning only. This note is to be removed when design is sufficiently progressed to provide the details needed to establish the basis for testing and acceptance criteria. **[HOLD]**

Requirement Section No.	Test (T) or Demo (D)	SU or COM	Plan (Including SSCs)**	Acceptance Criteria (TAC or GTC)*	Notes/Comments	Test Conditions
3.4.1.4	D	SU/COM	Demonstrate the container transfers required for the LPH system listed below: • Receive empty container on the transport bogie • Move empty container to the pour cave position • Transfer empty container from bogie to container park stand • Transfer empty container from container park stand to import/export position of turntable • Cycle empty container on turntable to pour position • Raise and lower container on elevator to/from melter seal pour head • Cycle filled container on turntable to turntable cooling position • Cycle filled container on turntable to turntable import/export position • Transfer filled container from import/export position of turntable to transport bogie • Move filled container on bogie to bogie hold position • Move filled container on bogie from bogie hold position to container export position • Transfer filled container to Buffer Store Area • Transfer filled container to export position Crane CTN: LPH-CRN-00002 Hoist CTNs: LPH-HST-00001, LPH-HST-00002, LPH-HST-00003, LPH-HST-00004 Grapple CTNs: LPH-TOOL-00001, LPH-TOOL-00002, LPH-TOOL-00003, LPH-TOOL-00004 Bogie CTNs: LPH-TRLY-00001, LPH-TRLY-00002 Turntable CTNs: LPH-TTBL-00001, LPH-TTBL-00002, LPH-TTBL-00003, LPH-TTBL-00004 Elevator CTNs: LPH-ELEV-00001, LPH-ELEV-00002, LPH-ELEV-00003, LPH-ELEV-00004 Park Stand CTNs: LPH-MHAN-00019/00020/00058/00059/00060/00061	**(GTC)** The permanent LPH mechanical handling equipment performs the container transfers without failure or dropping a container.		A test container weighted to be equal to a filled ILAW container will be utilized during demonstration of container transfer capabilities.
3.4.1.5	D	SU/COM	Demonstrate the ability to measure the temperature of ILAW package containers.	**(GTC)** The temperature of the ILAW package containers is measurable		

Requirement Section No.	Test (T) or Demo (D)	SU or COM	Plan (Including SSCs)**	Acceptance Criteria (TAC or GTC)*	Notes/Comments	Test Conditions
3.5.1.5	D	SU/COM	Demonstrate that all crane and hoist brakes are set when power is off. Crane CTNs: LPH-CRN-00001, LPH-CRN-00002 Hoist CTNs: LPH-HST-00001, LPH-HST-00002, LPH-HST-00003, LPH-HST-00004, LPH-HST-00007	**(GTC)** The crane and hoist brakes engage when the power is off		
3.5.4.1	T	SU/COM	Measure illumination levels below the Buffer Store Crane to verify lighting complies with IESNA Standard RP-7.	**(GTC)** The lighting below the Buffer Store Crane complies with IESNA Standard RP-7.		
3.4.4.5	D	SU/COM	Demonstrate cameras and/or shield windows provide adequate viewing to perform required remote LPH mechanical handling operations. Additionally, demonstrate: • Adequate viewing capabilities of grapple sequence indicator in pour cave and buffer store area • Adequate viewing capabilities of container ID at container handling positions (i.e. in bogie, in turntable, and in storage location)	**(GTC)** Remote control stations and shield windows provide adequate viewing for LPH mechanical handling operations **(GTC)** The grapple sequence indicator and container ID are visible at all required locations		
3.4.4.6	D	SU/COM	Demonstrate operation of remotely operated LPH equipment from remote operator interfaces using CCTV monitors and/or shield windows.	**(GTC)** LPH equipment is operable from remote operator interfaces using CCTV monitors and/or shield windows.	Physical demonstration	
3.5.1.6	D	SU/COM	Demonstrate that designated crane/hoist can support the removal and replacement of the required equipment. Crane CTN: LPH-CRN-00002 Hoist CTN: LPH-HST-00001, LPH-HST-00002, LPH-HST-00003, LPH-HST-00004	**(GTC)** LPH cranes and hoists successfully remove and replace equipment		
3.8.1.1	D	SU/COM	Demonstrate that the manipulators assist in recovery functions for LPH. Assistance may be provided by in-cave hoists or other manipulators.	**(GTC)** The MSMs successfully perform the required remote handling and in-cave maintenance operations		

Requirement Section No.	Test (T) or Demo (D)	SU or COM	Plan (Including SSCs)**	Acceptance Criteria (TAC or GTC)*	Notes/Comments	Test Conditions
3.8.1.2	D	SU/COM	Demonstrate MSM removal and replacement	**(GTC)** 1. Demonstrate that the pour cave monorail hoists can be used to remove a MSM slave arm and transport the arm into the monorail maintenance area. 2. Demonstrate that the pour cave monorail hoists can be used to re-fit a pour cave MSM.	Testing may be performed on one MSM only; Commissioning to select the MSM.	
3.9.4.1	D	SUP/SU/ COM	Demonstrate shield doors remain in place on loss of power Maintenance Shield Door CTN: LPH-DOOR-00008/00011/00012/00020/00021/00025/00027 Pour Cave Shield Door CTN: LPH-DOOR-00009/00010/00016/00017 Transfer Corridor Shield Door CTN: LPH-DOOR-00024/00026	**(GTC)** The listed shield doors remain in place on loss of facility power		
3.10.1.1	D	SU/COM	Demonstrate MHJ provides the following functions for LPH: • Sequence control of discrete mechanical handling equipment • Device interlocks • Control of process functions integral to the mechanical handling system • Control of package-supplied equipment Additionally, demonstrate the following interlocks function as indicated in 24590-LAW-M1-LPH-00001: • Bogie: Anti-collision and ultimate E/W switches operate correctly • Crane: Bridge ultimate N/S, Trolley ultimate E/W switches operate correctly • Hoists: Ultimate hi-hi and weight overload switches operate correctly • Elevator/Turntable: Ultimate raised and lowered operate correctly	**(GTC)** MHJ provides the required listed functions for LPH **(GTC)** The interlocks function as indicated in 24590-LAW-M1-LPH-00001		
3.10.1.3	D	SU/COM	Demonstrate the operability of local mode features and functions during operation from the local control panels or pendants for the following equipment: • Cranes: LPH-CRN-00001, LPH-CRN-00002 • Hoists: LPH-HST-00001, LPH-HST-00002, LPH-HST-00003, LPH-HST-00004, LPH-HST-00007 • Shielded Personnel Access Doors (SPADs): LPH-DOOR-00001, LPH-DOOR-00002, LPH-DOOR-00003, LPH-DOOR-00004 • Shield Doors (LPH-DOOR-00009/00010/00016/00017/00024/00026) • Maintenance Shield Doors (LPH-DOOR-00008/00011/00012/00020/00021/00025/00027)	**(GTC)** Check operation and various interlocks for doors and cranes		

Requirement Section No.	Test (T) or Demo (D)	SU or COM	Plan (Including SSCs)**	Acceptance Criteria (TAC or GTC)*	Notes/Comments	Test Conditions
3.10.4.2	D	SU/COM	Demonstrate the capability to stop equipment using the equipment's dedicated emergency stop Crane CTN: LPH-CRN-00001, LPH-CRN-00002 Hoist CTNs: LPH-HST-00001, LPH-HST-00002, LPH-HST-00003, LPH-HST-00004, LPH-HST-00007 Bogie CTNs: LPH-TRLY-00001, LPH-TRLY-00002 Turntable CTNs: LPH-TTBL-00001, LPH-TTBL-00002, LPH-TTBL-00003, LPH-TTBL-00004 Elevator CTNs: LPH-ELEV-00001, LPH-ELEV-00002, LPH-ELEV-00003, LPH-ELEV-00004	**(GTC)** Emergency stop removes all power to the equipment immediately, causing all equipment motion to stop.		
3.10.4.3	D	SU/COM	Demonstrate emergency stop status indication and reset functions. Crane CTN: LPH-CRN-00001, LPH-CRN-00002 Hoist CTNs: LPH-HST-00001, LPH-HST-00002, LPH-HST-00003, LPH-HST-00004, LPH-HST-00007 Bogie CTNs: LPH-TRLY-00001, LPH-TRLY-00002 Turntable CTNs: LPH-TTBL-00001, LPH-TTBL-00002, LPH-TTBL-00003, LPH-TTBL-00004 Elevator CTNs: LPH-ELEV-00001, LPH-ELEV-00002, LPH-ELEV-00003, LPH-ELEV-00004	**(GTC)** Equipment e-stop signals are displayed through the MHJ. **(GTC)** Parent equipment remains in shutdown until its e-stop circuit is reset.		
N/A	D	SU/COM	Product Quality Demonstrations: • Container label is readable through viewing windows or cameras during and after System LPH container handling activities • System LPH container handling operations do not compromise or damage container or label integrity • System LPH container handling operations do not introduce foreign material from entering container	**(GTC)** The product quality criteria are successfully demonstrated		

Notes:
* Test acceptance criteria (TAC) are based on requirements from authorization basis documents. General test criteria (GTC) are requirements from other sources.
CTN = component tag number

Appendix B – Descriptions of System Functional Flow and Interactions

Function: A.1	***Receive Empty Container to Bogie***
Detailed description: The operator is notified that a container is received by the buffer store or system LFH. The operator selects either the north or south transport bogie (LPH-TRLY-00001/00002) to service a new container. The operator initiates the automatic bogie transfer to the container receipt position sequence. If the transport bogie is not already located at the container import position (bogie position P4) of the container transfer corridor (L-025B), then it moves west on either the north or south transfer line to P4. The operator signals system LRH to deliver empty container once bogie presence at P4 is confirmed.	
Initiation: This function initiates when the operator is notified that a container has been received by the buffer store or system LFH	
Termination: This function terminates when the operator signals system LRH to deliver an empty container	
Parallel or sequential functions: None.	
Applicable Modes: Normal Operations	

Function: A.2	***Move Bogie with Empty Container to Pour Cave Position***
Detailed description: Once the operator verifies a container is present on the transport bogie, the operator selects a pour cave (L-B011C, L-B013B, L-B013C, or L-B015A) and verifies that the adjacent container park stand (LPH-MHAN-00058/00059/00060/00061), located between the south transfer line and monorail maintenance shield doors, is vacant. The operator initiates the automatic bogie transfer to pour cave sequence and the transport bogie holding the empty container moves east in the container transfer corridor to the pour cave transfer position (bogie position P7, P9, P11 or P13). P7 corresponds to pour cave L-B015A, P9 corresponds to pour cave L-B013C. P11 corresponds to pour cave L-B013B, and P13 corresponds to pour cave L-B011C.	
Initiation: This function initiates when the operator verifies a container is present on the transport bogie.	
Termination: This function terminates when the bogie with a filled container is located at P7, P9, P11 or P13.	
Parallel or sequential functions: None.	
Applicable Modes: Normal Operations	

Function: A.3	***Transfer Empty Container to Park Stand***
Detailed description: The pour cave monorail hoist (LPH-HST-00001/00002/00003/00004) moves to the selected transport bogie on the transfer line at the pour cave transfer position. LPH-HST-00001 is used for bogies at P7, LPH-HST-00002 for bogies at P9, LPH-HST-00003 for bogies at P11, and LPH-HST-00004 for bogies at P13. After ensuring the hoist is positioned over the container at the transport height, the operator lowers the hoist to the container height using an adjustable speed drive that lowers the hoist at a rate of 20 feet per minute. The product container grapple (LPH-TOOL-00001/00002/00003/00004) engages the container upon contact and the operator confirms that the grapple has engaged. The operator uses the adjustable speed drive to raise the hoist and container back to the transport height. The operator initiates the automatic monorail transfer to park stand sequence and the empty container is moved, with the pour cave monorail hoist and grapple assembly, south to the selected container park stand (monorail position P5). Once the container is confirmed to be in the proper position above the container park stand, the operator begins the set-down sequence. When setting down a container, the grapple will disengage after two complete set downs-down. Therefore, the operator first lowers the container and hoist to the set down height on the container park stand. The operator then raises the container and hoist to a height just above the set down height. Lastly, the operator again lowers the container and hoist to the set down height on the container park stand and confirms that the grapple has disengaged. The operator then raises the hoist, without the container, to the transport height.	
Initiation: This function initiates when the pour cave monorail hoist moves to a position over the bogie and container on the transfer line.	
Termination: This function terminates when the container has been set down on the container park stand	
Parallel or sequential functions: None.	
Applicable Modes: Normal Operations	

Function: A.4	***Transfer Empty Container to Turntable***
Detailed description: The pour cave monorail hoist moves to the selected container park stand supporting an empty container.	

Using the monorail hoist and grapple assembly, the operator picks-up the empty container from the container park stand through the pick-up sequence detailed in function A.3. Once the hoist and container have been raised to the transport height, the operator initiates the automatic monorail transfer to turntable import/export position sequence. The pour cave monorail hoist moves north to a position above the selected container turntable (LPH-TTBL-00001/00002/00003/00004) import/export position (monorail position P2). The operator lowers the empty container to the lower overpack located at the import/export position of the container turntable (turntable position P1), using the set-down sequence detailed in function A.3. The operator raises the hoist and grapple assembly to the transport height and initiates the automatic monorail transfer to park stand sequence. The pour cave monorail hoist moves south to the park stand position (monorail positon P5).
Initiation: This function initiates when the pour cave monorail hoist moves to the selected container park stand supporting an empty container.
Termination: This function terminates when the pour cave monorail hoist moves south to P5.
Parallel or sequential functions: None
Applicable Modes: Normal Operations

Function: B.1	***Cycle Empty Container on Turntable to Pour Position***
Detailed description: The container turntable rotary lock pin disengages and the respective turntable rotary drive (LPH-MTR-00001/00002/00003/00004) rotates the container turntable 120 degrees at approximately ½ rotations per minute. The rotation detector, a rolling cam follower that senses the presence of dimples located at 120-degree increments around the container turntable, ensures the container turntable is in the proper position and the turntable engages the rotary lock pin. Interlocks prevent the rotary lock pin from engaging when the rotation detector does not agree with the rotary drive's encoder. The empty container that had been present at the import/export position of the turntable (P1) is now located at the pour position (P2).	
Initiation: This function initiates when the container turntable rotary lock pin disengages.	
Termination: This function terminates when the empty container is located at the pour position of the container turntable.	
Parallel or sequential functions: None	
Applicable Modes: Normal Operations	

Function: B.2	***Raise and Lower Elevator for Glass Pouring***
Detailed description: The container elevator (LPH-ELEV-00001/00002/00003/00004), using dual elevator drives (LPH-MTR-00005/00006/00007/00008) and (LPH-MTR-00009/00010/00011/00012), raises the elevator platform located at the pour position of the container turntable. The platform raises the empty container and lower overpack from the lowered position (elevator position P1) at a rate of approximately 2 feet per minute until it contacts the melter pour seal head at the elevator raised position (P2). A signal is sent to system LMP that a container is present and ready for filling. System LMP then fills the container in a series of glass pours. Upon completion of the glass pours, the filled container and lower overpack is lowered on the elevator platform back to the pour position of the container turntable.	
Initiation: This function initiates when the elevator platform raises the empty container and lower overpack.	
Termination: This function terminates when the elevator platform lowers the filled container and lower overpack to the container turntable.	
Parallel or sequential functions: None	
Applicable Modes: Normal Operations	

Function: B.3	***Cycle Filled Container to Turntable Cooling Position***
Detailed description: The container turntable rotary lock pin disengages and the respective turntable rotary drive rotates the container turntable 120 degrees at approximately ½ rotations per minute. The rotation detector, a rolling cam follower that senses the presence of dimples located at 120-degree increments around the container turntable, ensures the container turntable is in the proper position and the turntable engages the rotary lock pin. Interlocks prevent the rotary lock pin from engaging when the rotation detector does not agree with the rotary drive's encoder. The filled container that had been present at the pour position of the turntable (P2) is now located at the cooling position (P3).	
Initiation: This function initiates when the container turntable rotary lock pin disengages.	
Termination: This function terminates when the filled container is located at the cooling position of the container turntable.	
Parallel or sequential functions: None	
Applicable Modes: Normal Operations	

Function: B.4	***Cycle Filled Container to Turntable Import/Export Position***

Detailed description: The container turntable rotary lock pin disengages and the respective turntable rotary drive rotates the container turntable 120 degrees at approximately ½ rotations per minute. The rotation detector, a rolling cam follower that senses the presence of dimples located at 120-degree increments around the container turntable, ensures the container turntable is in the proper position and the turntable engages the rotary lock pin. Interlocks prevent the rotary lock pin from engaging when the rotation detector does not agree with the rotary drive's encoder. The filled container that had been present at the cooling position of the turntable (P3) is now located at the import/export position (P1).
Initiation: This function initiates when the container turntable rotary lock pin disengages.
Termination: This function terminates when the filled container is located at the import/export position of the container turntable.
Parallel or sequential functions: None
Applicable Modes: Normal Operations

Function: B.5	***Transfer Filled Container from Turntable to Bogie***
Detailed description: The operator initiates the automatic bogie transfer to pour cave sequence and the empty bogie moves to the pour cave transfer position (P7, P9, P11, or P13). Once it is confirmed the bogie is in position, the operator initiates the automatic monorail transfer to turntable import/export position sequence and the pour cave monorail hoist moves north to the turntable import/export position (monorail position P2). Upon confirming that the pour cave monorail hoist is at the turntable import/export position above a filled and cooled container, the operator picks-up the container with the monorail hoist and grapple assembly and raises it to the transport height, using the sequence detailed in function A.3. The operator initiates the automatic monorail transfer to bogie sequence and the monorail hoist with a filled container moves south to a position above the selected empty transport bogie (monorail position P3 or P4, depending on north/south transfer line). The operator lowers the filled container to the transport bogie using the same set-down process detailed in section A.3.	
Initiation: This function initiates when the operator initiates the automatic bogie transfer to pour cave sequence.	
Termination: This function terminates when the filled container is placed on the transport bogie.	
Parallel or sequential functions: None	
Applicable Modes: Normal Operations	

Function: B.6	***Move Bogie with Filled Container to Hold Position***
Detailed description: The operator raises the pour cave monorail hoist from the filled container on the transport bogie and initiates the automatic monorail transfer to park stand sequence. The monorail hoist moves south to the park stand position (monorail position P5). Once the monorail hoist is clear of the transport bogie carrying the filled container, the operator initiates the automatic bogie transfer to hold position sequence and the bogie moves east on the transfer line to the bogie hold position (bogie position P15).	
Initiation: This function initiates when the operator raises the pour cave monorail hoist from the filled container on the transport bogie.	
Termination: This function terminates when the transport bogie moves on the transfer line with the filled container to P15.	
Parallel or sequential functions: None	
Applicable Modes: Normal Operations	

Function: B.7	***Move Bogie with Filled Container to Container Export Position***
Detailed description: The operator selects either the north or south transport bogie carrying a filled container at the bogie hold position (P15). The operator verifies that the corresponding container export stand (LPH-MHAN-00019/00020) at the container export position (P18) is vacant. Once confirmed, the operator initiates the automatic bogie transfer to export position sequence and the transport bogie moves east on the transfer line to the container export position.	
Initiation: This function initiates when the operator initiates the automatic bogie transfer to export position sequence.	
Termination: This function terminates when the transport bogie moves to P18.	
Parallel or sequential functions: None	
Applicable Modes: Normal Operations	

Function: B.8	***Transfer Filled Container to Buffer Store Area***
Detailed description: If the filled container is out-of-specification or the finishing line cannot accept a container at that time, the operator initiates the automatic buffer store crane to export position sequence. The buffer store crane (LPH-CRN-00002) moves to the north or south bogie line container export position. The operator verifies that a selected buffer store position is vacant. The operator uses the buffer store crane and hoist assembly to pick-up the filled container from the transport bogie,	

using the pick-up sequence detailed in function A.3. Once the container has been raised to the transport height, the operator initiates the automatic buffer store crane to storage position sequence and the buffer store crane moves the filled container to the selected buffer area storage position. The operator sets-down the container in the buffer store area with the buffer store crane hoist, using the set-down sequence detailed in A.3.
Initiation: This function initiates when the operator initiates the automatic buffer store crane to export position sequence.
Termination: This function terminates when the filled container is set-down in the buffer store area.
Parallel or sequential functions: None
Applicable Modes: Normal Operations

Function: B.9	***Transfer Filled Container to Export Position***
Detailed description: The operator selects the north or south container export stand and verifies that the selected export stand is vacant. If the exit path to the export stand is available, the operator initiates the automatic buffer store crane to storage position sequence. The buffer store crane moves to the location of the selected container. The operator uses the buffer store crane hoist to pick-up the container, using the pick-up sequence detailed in A.3. The operator identifies the location as a vacant position in the buffer storage area. The operator initiates the automatic buffer store crane to export position sequence and the buffer store crane moves the filled container to the selected container export stand. The operator sets-down the container on the export stand with the buffer store crane hoist. The operator initiates the automatic buffer store crane to alternate position sequence. The buffer store crane moves to the alternate position (opposite bogie line, buffer storage area) to avoid interference with export operations of LFH.	
Initiation: This function initiates when the operator verifies that the selected container export stand is vacant.	
Termination: This function terminates when the filled container has been placed on the container export stand.	
Parallel or sequential functions: None	
Applicable Modes: Normal Operations	

Function: C.1	***Transport Maintenance Equipment***
Detailed description: LPH parts and equipment are imported through two melter decontamination hatches located in the monorail maintenance area. The pour cave monorail hoists transport replacement container turntable parts from the monorail maintenance area to the pour caves for installation. Equipment intended for the buffer store area is transported using the container transport bogies and the buffer store crane.	
Initiation: This function initiates when it is necessary to import maintenance equipment to system LPH.	
Termination: This function terminates upon completion of maintenance activities.	
Parallel or sequential functions: None	
Applicable Modes: Maintenance	

Function: D.1	***Provide Cooling Water***
Detailed description: System PCW supplies cooling water to each of the four LAW container turntables, as well as the pour cave cooling panels. When pouring cycles are initiated, water enters the cooling jacket located at the base of each container turntable and removes heat to protect the surrounding concrete floor. Globe valves at the outlet of the turntable jacket are used for controlling the water flow rates. Upon completion of the pour cycle, the jacket is emptied in preparation for the next cycle.	
Initiation: This function initiates when the melter pour spout begins its pouring cycle.	
Termination: This function terminates when pouring cycles have been completed.	
Parallel or sequential functions: All	
Applicable Modes: Normal Operations	

Function: E.1	***CCTV Monitoring of Container Transfer Operations***
Detailed description: System PTJ utilizes closed circuit television cameras (CCTVs) in the container transport tunnel to allow remote viewing of operations and equipment.	
Initiation: This function initiates when the LAW Facility is in startup operations.	
Termination: This function terminates final glass pouring operations have finished.	
Parallel or sequential functions: All	
Applicable Modes: Normal Operations	

Function: F.1	***Control of Function, Sequence, and Interlocks***

Detailed description: The Mechanical Handling Control System (MHJ) provides non-safety monitoring and control functions for LPH operations.
Initiation: This function initiates when the LAW Facility is in startup operations.
Termination: This function terminates when LAW glass production operations are complete.
Parallel or sequential functions: All
Applicable Modes: All Modes

Function: G.1	***Provide Instrument Service Air***
Detailed description: System ISA supplies air to the buffer store crane to cool the crane mounted cameras and the laser positioning device, as well as PTJ cameras located in the container transfer corridor and equipment maintenance rooms.	
Initiation: This function initiates when filled containers are present in LPH.	
Termination: This function terminates when there are no filled containers present in LPH.	
Parallel or sequential functions: All	
Applicable Modes: Normal Operations	

Function: H.1	***Receive Electrical Power***
Detailed description: The low voltage electrical system (LVE) system supplies electrical power to the LPH equipment and instruments.	
Initiation: This function initiates when the LAW Facility is in startup operations.	
Termination: This function terminates on loss of WTP site power.	
Parallel or sequential functions: All	
Applicable Modes: All modes	

Function: I.1	***Provide Lighting for CCTV and Operations***
Detailed description: Lights are installed on the buffer store crane (LPH-CRN-00002) and are used to provide illumination in the buffer store area during normal and maintenance operations.	
Initiation: This function initiates when the LAW Facility is in startup operations.	
Termination: This function terminates when glass production operations are complete.	
Parallel or sequential functions: All	
Applicable Modes: Normal, Maintenance	

Appendix C – Active Safety Instruments and Functions

Information in the following table reflects the current design of active safety instruments, including functions, and safety designations per the P&IDs and associated equipment and instrument lists. In some cases, the current safety classification of the SSCs in design is known to exceed the design requirements. The information will be updated as needed to reflect changes to the design. The information below is provided in support of Plant Engineering and Operations and does not represent design requirements.

No active safety instrumented functions are identified.

Appendix D – [Reserved] System Procedures

RESERVED

Appendix E – [Reserved] System History

RESERVED