Department of Energy
Richland Operations Office
P.O. Box 550
Richland, Washington 99352

16-ESQ-0023

JAN 11 2016

Ms. J. A. Hedges, Program Manager
Nuclear Waste Program
Washington State Department of Ecology
3100 Port of Benton Boulevard
Richland, Washington 99354

CLASS 1 MODIFICATIONS TO THE HANFORD FACILITY RESOURCE CONSERVATION AND RECOVERY ACT PERMIT, QUARTER ENDING DECEMBER 31, 2015

Dear Ms. Hedges:

In accordance with the Hanford Facility Resource Conservation and Recovery Act Permit, Dangerous Waste Portion for the Treatment, Storage, and Disposal of Dangerous Waste (Permit) Condition I.C.3, enclosed for your notification is a Class 1 Modification for the quarter ending December 31, 2015.

The modification updates information in Part III of the Permit Revision 8C and pertains to the 242-A Evaporator. The modification is being made to ensure that activities are conducted in compliance with the Permit. A record of the modification is maintained in the Hanford Facility Operating Record.

The enclosed permit modification notification Form 242-A-2015-01 replaces the previous version dated November 5, and 12, of 2015, respectively that was previously informally provided to the Washington State Department of Ecology.

If you have any questions, please contact me, or your staff may contact Jeffrey A. Frey, Assistant Manager for Safety and Environment on (509) 376-7727.

Sincerely,

Stacy Charboneau
Manager

ESQ:ACM

Enclosure

cc: See page 2

cc w/encl:
J. L. Cantu, Ecology (CD ROM)
R. G. Hastings, ORP (CD ROM)
Administrative Record, TSD: H-0-1, T-2-6 (Hard Copy & CD ROM)
Ecology NWP Library (Hardcopy & CD ROM)
Environmental Portal, LMSI, A3-95 (CD ROM)
Portland State University, Government Information (CD ROM)
Gonzaga University, Foley Center Library (CD ROM)
HF Operating Record (J. K. Perry, MSA, A3-01) (CD ROM)
University of Washington, Suzzallo Library, Govt Publications Department (CD ROM)
Washington State University, Tri Cities, DOE Public Reading Room, Consolidated Information Ctr., (CD ROM)

cc w/o encl:
D. J. Alexander, Ecology
L. E. Borneman, WRPS
A. S. Carlson, Ecology
B. L. Curn, URS
S. L. Dahl, Ecology
K. A. Hadley, WCH
M. E. Jones, Ecology
B. L. Becker-Khaleel, CHPRC
S. Kosjerina, CHPRC
P. W. Martin, CHPRC
S. Murdock, BNI
B. Peck, BNI
R. R. Skinnarland, Ecology
S. A. Thompson, WRPS
H. T. Tilden, PNNL
M. B. Wilson, MSA
D. M. Yasek, BNI

ENCLOSURE

CLASS 1 MODIFICATIONS FOR QUARTER ENDING DECEMBER 31, 2015
Ms. S. L. Dahl-Crumpler, Ecology

Consisting of 71 pages,
including this cover page

Hanford Facility RCRA Permit Modification Forms

Part III, Operating Unit Group 4

242-A Evaporator

Index

Page	Permit Section
Page 2 of 4:	Hanford Facility RCRA Permit III.4, Permit Conditions
Page 3 of 4:	Chapter 4.0 Process Information (Page 2 of 2)
Page 4 of 4:	Chapter 4.0 Process Information (Page 2 of 2)

Submitted by WRPS Co-Operator:

D. Kent Smith — Date 12/17/15

Reviewed by DOE-ORP Program Office:

Thomas W. Fletcher — Date 12/22/15

Hanford Facility RCRA Permit Modification Form

Unit:	Permit Part
242-A Evaporator	**Part III, Operating Unit Group 4**

Description of Modification:

Part III, Operating Unit Group 4 Permit Conditions

CHAPTERS SPECIFIC TO OPERATING UNIT GROUP 4:

Chapter 4.0 Process Information, dated ~~September 30, 2013~~December 31, 2015

~~Appendix 4B Tank Integrity Assessment, dated December 31, 2002~~

WAC 173-303-830 Modification Class	Class 1	Class 1	Class 2	Class 3
Please mark the Modification Class:	X			

Enter relevant WAC 173-303-830, Appendix I Modification citation number: A.1

Enter wording of WAC 173-303-830, Appendix I Modification citation: Administrative and informational changes.

Modification Approved: ☑ Yes ☐ No (state reason for denial)

Reason for denial:

Reviewed by Ecology:

for S. L. Dahl-Crumpler 12/30/15

Date

Hanford Facility RCRA Permit Modification Form

Unit:	Permit Part
242-A Evaporator	**Part III, Operating Unit Group 4**

Description of Modification:

Chapter 4.0, Process Information (1 of 2)

- Editorial: Updated header to be consistent with other Chapters (i.e., deleted 'Quarter Ending'), and corrected page numbering for Section 4.0 to start on page 4.1 and not 4.5 and re-generated all Table of Contents (this change does not show up in redline/strikeout).
- Editorial acronyms spelled out on first use, and unit name corrections: Sections 4.0, 4.1.1, 4.1.3, 4.1.4, 4.1.5, 4.1.5.1, 4.1.6, 4.1.7.1, 4.1.7.2.5, 4.1.7.3, 4.1.7.3.3, 4.1.7.3.2, 4.1.8, 4.1.10, 4.1.11, and 4.3.
- Editorial English/metric unit of measure conversions and corrected conversion errors : Sections 4.0, 4.1.2, 4.1.3, 4.1.4, 4.1.7.2, 4.1.7.2.1, 4.1.7.2.2, 4.1.7.2.3, 4.1.7.2.4, 4.1.7.2.5, 4.1.7.3.1, 4.1.7.3.2, 4.1.7.3.3, 4.1.8, 4.1.10, 4.2.1, 4.2.2.1, and 4.2.2.2.
- Editorial component naming/numbering: Sections 4.0, 4.1.2, 4.1.3, 4.1.4, 4.1.5, 4.1.7.2, 4.1.7.2.1, 4.1.7.2.3, 4.1.7.2.4, 4.1.7.3, 4.1.7.3.2, 4.1.7.4.1, 4.1.9, 4.1.10, 4.1.11, 4.2.1, 4.3, and Table 4.1.
- Editorial correct degrees symbol: Sections 4.0, and 4.1.7.2.
- Editorial change 'fence line' to 'boundary': Sections 4.1.7.3, and 4.1.7.3.3.
- Editorial corrected Section reference numbers/replaced section symbol '§' with 'Section': Sections 4.1.2, 4.1.6, 4.1.7.2.2, 4.1.7.2.4, and 4.1.7.3.2.
- Editorial corrected use of singular/plural, and capitalization: Sections 4.1.3, 4.1.4, 4.1.7.3, 4.1.7.1, 4.1.7.3.2, 4.2.2.3, and Table 4.1.
- Grammatical sentence structure corrections/clarification, document/diagram titles: Section 4.1.5, 4.1.5.1, 4.1.7.1, 4.1.7.2, 4.1.7.3, 4.1.8, and 4.1.11.
- Consistency chapter title with chapter number, and capitalize chapter names: Section 4.1.3, 4.1.9, 4.1.10, 4.1.12, 4.1.13, and 4.2.2.2.
- Clarification regarding DST System components: Sections 4.1.3, and 4.1.7.2.5.
- Consistency Integrity Assessment Reports (IARs). Referred to the 2008 IARs located in the 242-A Evaporator Unit-Specific Operating Record file; and deleted reference to Appendix 4B, Tank Integrity Assessment, dated December 31, 2002: Sections 4.1.1, 4.1.5, 4.1.5.1, 4.1.6, 4.1.7.1, and 4.1.8.

WAC 173-303-830 Modification Class	Class 1	Class '1	Class 2	Class 3
Please mark the Modification Class:	X			

Enter relevant WAC 173-303-830, Appendix I Modification citation number: A.1

Enter wording of WAC 173-303-830, Appendix I Modification citation: Administrative and informational changes.

Modification Approved: ☑ Yes ☐ No (state reason for denial)

Reason for denial:

Reviewed by Ecology:

12/30/15

fn

S. L. Dahl-Crumpler Date

Hanford Facility RCRA Permit Modification Form

Unit:	Permit Part
242-A Evaporator	**Part III, Operating Unit Group 4**

Description of Modification:

Chapter 4.0, Process Information (1 of 2)

- Section 4.0, Process Information: Consistency revised process condensate description to be consistent with language in Waste Analysis Plan, Section 3.5.1, second paragraph. Inserted text stating that the cooling water and steam condensate waste streams do not designate as dangerous waste, which is consistent with text in Section 3.4.
- Section 4.1.2, PC-5000 Transfer Line: Editorial inserted 'approximate'.
- Section 4.1.3, Vapor-Liquid Separator (C-A-1) and Ancillary Equipment: Editorial inserted 'approximately'. Replaced 'slurry line' with 'recirculation loop'.
- Section 4.1.4, Condensate Collection Tank (TK-C-100) and Ancillary Equipment: Editorial changed heading level from 4 to 3, clarified language for candidate feed tank waste samples, and corrected filter component numbering.
- Section 4.1.7.3.3, PC-5000: Editorial changed 'carrier' to 'primary'.
- Section 4.1.9, Tank Management Practices: Editorial inserted 'operators using', deleted 'vessel', inserted 'the', replaced 'recirculation pump (P-B-1)' with 'process condensate pump (P-C-100)', replaced 'will' with 'can', deleted 'The process condensate pump (P-C-100) will be shut down manually at the direction of the Shift Manager or 242-A Evaporator Control Room Operator if a leak occurs' because P-C-100 shutdown information is stated earlier in the paragraph.
- Section 4.2, Air Emissions Control: Inserted '40 CFR 264' for Subpart AA clarification.
- Section 4.2.1, Applicability of Subpart AA Standards: Deleted outdated reference to DOE/RL-1996 report, and deleted outdated reference to 1994 campaigns.

WAC 173-303-830 Modification Class	Class 1	Class '1	Class 2	Class 3
Please mark the Modification Class:	X			

Enter relevant WAC 173-303-830, Appendix I Modification citation number: A.1

Enter wording of WAC 173-303-830, Appendix I Modification citation: Administrative and informational changes.

Modification Approved: ☑ Yes ☐ No (state reason for denial)

Reason for denial:

Reviewed by Ecology:

for [signature] 12/30/15

S. L. Dahl-Crumpler Date

Remove and Replace the Following Pages:

Replace:

- Part III, Operating Unit Group 4, Permit Conditions
- Chapter 4.0, Process Information

Remove:

- Appendix 4B, Tank Integrity Assessment, dated December 31, 2002

OPERATING UNIT 4 UNIT-SPECIFIC CONDITIONS
242-A EVAPORATOR

UNIT DESCRIPTION

The 242-A Evaporator is a mixed waste treatment and storage unit consisting of a conventional forced-circulation, vacuum evaporation system to concentrate mixed-waste solutions located in the 200 East Area.

This document sets forth the operating conditions for the 242-A Evaporator.

III.4.A COMPLIANCE WITH UNIT SPECIFIC PERMIT CONDITIONS

The Permittees shall comply with all requirements set forth in the Hanford Facility RCRA Permit (Permit) as specified in Permit Attachment 9, Permit Applicability Matrix, including all approved modifications. All chapters, subsections, figures, tables, and appendices included in the following unit-specific Permit Conditions are enforceable in their entirety.

In the event that the Part III-Unit-Specific Conditions for Operating Unit 4, 242-A Evaporator conflict with the Part I-Standard Conditions and/or Part II-General Facility Conditions of the Permit, the unit-specific conditions for Operating Unit 4, 242-A Evaporator prevail.

CHAPTERS SPECIFIC TO OPERATING UNIT GROUP 4:

Chapter 1.0 Part A Form, dated March 31, 2014

Chapter 3.0 Waste Analysis Plan, dated March 31, 2014

Chapter 4.0 Process Information, dated ~~September 30, 2013~~December 31, 2015

~~Appendix 4B Tank Integrity Assessment, dated December 31, 2002~~

Chapter 5.0 Groundwater Monitoring, dated (not applicable)

Chapter 6.0 Procedures to Prevent Hazards, dated December 31, 2014

Chapter 7.0 Contingency Plan, dated December 31, 2014

Chapter 8.0 Personnel Training, dated September 30, 2013

Chapter 11.0 Closure, dated September 30, 2013

III.4.B COMPLIANCE WITH UNIT-SPECIFIC PERMIT CONDITIONS

III.4.B.1 Portions of permit attachment 4 (DOE/RL-94-02) that are not made enforceable by inclusion in the applicability matrix for that document are not made enforceable by reference in this document.

This page intentionally left blank.

CHAPTER 4.0
PROCESS INFORMATION

This page intentionally left blank.

CHAPTER 4.0
PROCESS INFORMATION

CONTENTS

4.0 PROCESS INFORMATION 4.5

4.1 Tank Systems 4.6
4.1.1 Design Requirements 4.6
4.1.2 PC-5000 Transfer Line 4.7
4.1.3 Vapor-Liquid Separator (C-A-1) and Ancillary Equipment 4.7
4.1.4 Condensate Collection Tank (TK-C-100) and Ancillary Equipment 4.9
4.1.5 Integrity Assessments 4.11
4.1.6 Additional Requirements for Existing Tanks 4.12
4.1.7 Secondary Containment and Release Detection for Tank Systems 4.12
4.1.8 Variances from Secondary Containment Requirements 4.17
4.1.9 Tank Management Practices 4.18
4.1.10 Labels or Signs 4.19
4.1.11 Air Emissions 4.19
4.1.12 Management of Ignitable or Reactive Wastes in Tank Systems 4.19
4.1.13 Management of Incompatible Wastes in Tank Systems 4.19

4.2 Air Emissions Control 4.19
4.2.1 Applicability of Subpart AA Standards 4.19
4.2.2 Process Vents - Demonstrating Compliance 4.20

4.3 Engineering Drawings 4.21

FIGURES

Figure 4.1. 242-A Evaporator Simplified Process Flow Diagram 4.23
Figure 4.2. 242-A Evaporator Process Loop 4.24
Figure 4.3. 242-A Evaporator Slurry System 4.25
Figure 4.4. 242-A Evaporator Process Condensate System 4.26
Figure 4.5. 242-A Evaporator Vacuum Condenser System 4.27
Figure 4.6. 242-A Evaporator Drain System 4.28

TABLE

Table 4.1. Process and Instrumentation Diagrams 4.21
Table 4.2. 242-A Evaporator Secondary Containment Systems Drawings 4.22

This page intentionally left blank.

4.0 PROCESS INFORMATION

Where information regarding treatment, management, and disposal of the radioactive source byproduct material and/or special nuclear components of mixed waste (as defined by the Atomic Energy Act of 1954 as amended) has been incorporated into this document, it is not incorporated for the purpose of regulating the radiation hazards of such components under the authority of this permit or chapter 70.105 RCW and its implementing regulations but is provided for information purposes only.

The 242-A Evaporator receives mixed waste from the DST System that contains inorganic and organic constituents and radionuclides.
_Additional_Requirements_for_Secondary_Containment_andA 242-A Evaporator simplified process flow diagram is given in Figure 4.1. The 242-A Evaporator separates the mixed waste received from the DST System, generating the following waste streams:

- A concentrated aqueous waste stream (slurry) containing the nonvolatile components, including most of the radionuclides, inorganic constituents, and nonvolatile organics such as tri-butyl phosphate
- A dilute aqueous waste stream (process condensate) containing the volatile components, primarily water with low concentrations of radionuclides, inorganic constituents, and volatile constituents such as ammonia and acetone.

The slurry is routed back to the DST System pending further treatment. The process condensate is transferred to ~~the~~ Liquid Effluent Retention Facility (LERF) for storage until processed through the 200 Area Effluent Treatment Facility (ETF).

The 242-A Evaporator process employs a conventional forced circulation, vacuum evaporation system to concentrate the DST System waste solution. The major components of this system include the reboiler (E-A-1), vapor-liquid separator (C-A-1), recirculation pump (P-B-1) and pipe loop, slurry product pump, condenser, jet vacuum system, and condensate collection tank (TK-C-100).

The vapor-liquid separator~~,~~ (C-A-1)~~,~~ also called the evaporator vessel, and the condensate collection tank~~,~~ (TK-C-100), meet the definition of a tank in WAC 173-303-040. Other process equipment associated with these tank systems is considered ancillary equipment. Drawings that aid in understanding the systems are provided in Section 4.3.

The 242-A Evaporator receives waste from ~~a~~ DST System tank~~,~~ 241-AW-102 that serves as the 242-A Evaporator feed tank. The feed enters the recirculation line and blends with the main process slurry stream, which is pumped to the reboiler.

In the reboiler, the mixture is heated to the specified operating temperature, normally 100 to 155°F (38 to ~~77F~~68°C), using 21 to 69 kilopascals (3 to 10 pounds per square inch [psig]) gauge pressure steam. The low-pressure steam provides adequate heat input, and the resulting low-temperature differential across the reboiler minimizes scale formation on the heat transfer surfaces. The static pressure of the waste in the reboiler is sufficient to suppress the boiling point so the waste does not boil in the reboiler tubes. Boiling occurs only near or at the liquid surface in the vapor-liquid separator (C-A-1).

The heated slurry stream is discharged from the reboiler to the vapor-liquid separator (C-A-1) that is typically ~~is~~ maintained at an absolute pressure of 5.3 to 10.7 kilopascals (0.77 to 1.55 pounds per square inch absolute). Under this reduced pressure, a fraction of the water in the heated slurry flashes to steam and the steam is drawn through two, wire mesh deentrainer pads into a 1.1-meter (42-inch) diameter vapor line that leads to the primary condenser, leaving behind a more concentrated slurry solution in the vapor-liquid separator (C-A-1).

After a brief residence time in the vapor-liquid separator (C-A-1), the slurry exits from the bottom through the lower portion of the recirculation line and is recirculated by the recirculation pump (P-B-1). The pump discharges the slurry back to the reboiler via the upper portion of the recirculation line, thus completing the recirculation loop.

The specific gravity of the waste liquid is monitored closely to ensure that the target density, established before the beginning of the campaign, is not exceeded. A portion of the slurry is removed from the upper portion of the recirculation line using ~~the~~ slurry pump (P-B-2) and transferred through an encased underground pipeline (pipe-within-a-pipe) to a designated slurry receiver tank in the DST System.

The vapors are drawn from the vapor-liquid separator (C-A-1), through a 1.1-meter (42-inch) diameter vapor line and enter a series of three condensers, where the vapors are condensed using raw water. The condensed vapors, called process condensate, are collected in the condensate collection tank (TK-C-100). Steam jets are used to create a vacuum on the vapor liquid separator drawing the process vapors into and through the condensers. Noncondensable vapors are drawn from the condensers, then through a series of particulate filters and vented to the atmosphere. The air discharges are monitored continuously when the 242-A Evaporator is operating to verify that standards for radionuclide and ammonia emissions standards are met.

The ~~P~~process condensate, a mixed waste, is a dilute aqueous solution with ammonia, ~~contains the~~ volatile ~~constituents~~ organics, ~~of the waste~~ and trace quantities of non-volatile constituents~~inorganic materials and radionuclides~~. The process condensate is pumped from the condensate collection tank (TK-C-100) through the PC-5000~~an~~ encased underground pipeline (pipe-within-a-pipe) to the LERF.

During a campaign, the evaporation process is continuous with typical feed flow rates of 260 to 450 liters (69 to 119 gallons) per minute, process condensate flow rates of 150 to 230 liters (39 to 61 gallons) per minute, and slurry flow rates of 110 to 230 liters (29 to 61 gallons) per minute. The evaporator process is shutdown when the desired endpoint concentration of the slurry is met. Endpoints are established at the beginning of the campaign, based on the target specific gravity of the waste, or allowable waste volume reduction ~~(WVR)~~ and defined operating limits. If the evaporation rate cannot achieve the desired endpoint, slurry in the DST System serving as the slurry receiver is transferred to the feed tank for one or more passes through the 242-A Evaporator. At the end of each campaign, the 242-A Evaporator process equipment is shutdown, emptied, flushed with raw water, and placed in a safe standby mode.

Other discharges during 242-A Evaporator processing include condensate from the steam used to heat the waste and cooling water used to condense the vapors. The 242-A Evaporator is designed to prevent contamination of these streams, as such the cooling water and steam condensate waste streams do not designate as dangerous waste. The fluids on the uncontaminated side of the heat exchangers are maintained at a higher pressure than the waste stream so that uncontaminated fluid migrates toward the contaminated waste if a leak were to occur. The steam condensate and the cooling water are monitored continuously for radiation, pH, conductivity, and discharged to TEDF as long as none of the discharge limits are exceeded. The steam condensate and cooling water streams were assessed in the stream specific reports (WHC 1990a and WHC 1990b) and are not dangerous waste in accordance with WAC 173-303.

The 242-A Evaporator process is controlled by operators using the Monitoring Control System (MCS). The MCS computer monitors process parameters and controls the parameters where required. Once the configuration parameters and other process control inputs are set, the MCS maintains the process parameters within specified ranges by sending output signals that operate specific pieces of equipment (e.g., control valves).

4.1 Tank Systems

This section discusses information associated with design requirements, integrity assessments, and any additional requirements for tanks used to treat and store mixed waste in the 242-A Evaporator.

4.1.1 Design Requirements

The following design requirements were addressed in the 242-A Evaporator/Crystallizer Tank System Integrity Assessment Reports (IARs), which are identified in Section 4.1.5~~(Appendix 4B)~~:

- Minimum design wall thicknesses and measured wall thicknesses at various points throughout the tank systems
- Design standards used in construction, including references
- Waste characteristics
- Materials of construction and compatibility of materials with the waste being processed
- Corrosion protection
- Seismic design basis evaluation

The conclusion of the latest ~~integrity assessment report~~IARs are~~is~~ that the 242-A Evaporator system and associated PC-5000 transfer line is not leaking and is fit for use. The inspections, tests, and analyses performed provide assurance that the tank system has adequate design, sufficient structural strength, and sufficient compatibility with the waste to not collapse, rupture, or fail during operation. The report also states that a review of construction files indicates that the building structure was designed and constructed to withstand a design-basis earthquakehttp://apps.leg.wa.gov/WAC/default.aspx?cite=173-303-640.

4.1.2 PC-5000 Transfer Line

Process condensate from the 242-A Evaporator is transferred to the LERF using a pump located in the 242-A Evaporator and approximately 1,500 meters (5,000 feet) of pipe, consisting of a 7.6-centimeter (3~~-~~-inch) carrier pipe within a 6-inch (15 centimeter) outer containment pipeline. Flow through the pump is controlled through a valve at approximate flow rates from 150 to 300 liters (40 to 80 gallons) per minute.

The encased fiberglass transfer line (PC-5000) exits the 242-A Evaporator below grade and remains below grade at a minimum 1.2-meter (3.9-feet) depth for freeze protection, until the pipeline emerges at the LERF catch basin, at the corner of each basin. All piping at the catch basin that is less than 1.2- meters (3.9 feet) below grade is wrapped with electric heat tracing tape and insulated for protection from freezing. Additional detail including information on secondary containment, leak detection and integrity assessment for this line is provided in ~~§~~Sections 4.1.7~~6~~.3.3 and §4.1.5~~4~~.1.

4.1.3 Vapor-Liquid Separator (C-A-1) and Ancillary Equipment

The following sections describe the vapor-liquid separator (C-A-1) and ancillary equipment.

Waste Feed System. Feed to the 242-A Evaporator is supplied via a pump located in the 241-AW-102 feed tank. The feed pump transfers the waste to the 242-A Evaporator through a 7.6-centimeter (3-inch) diameter carbon steel transfer pipeline encased in a 6-inch (15 centimeter) diameter carbon steel pipe to provide secondary containment. The feed pipeline is equipped with a leak detection system that is part of the DST System.

Waste feed will be sampled from 241-AW-102 or identified candidate feed tanks as described in the Waste Analysis Plan (Chapter 3.0). The feed sampler (SAMP-F-1) located in a sample enclosure located in the hot equipment storage room has been isolated and blanked, and will be closed in accordance with the approved Closure Plan.

Evaporator Process Loop. The 242-A Evaporator process loop equipment components are as follows:

- Reboiler (E-A-1)
- Vapor-liquid separator (C-A-1)
- Recirculation pump (P-B-1)
- Recirculation loop

Figure 4.2 is a simplified process flow diagram showing the major components of the process loop.

Reboiler (E-A-1). Waste is heated as the waste passes through the reboiler before entering the vapor-liquid separator (C-A-1). The reboiler is a vertical tube unit with steam on the shell-side and process

solution on the tube-side. The 364 tubes in the reboiler are enclosed in an approximately 1~~.03~~ meter 40-inch)-outside diameter, 4.6-meter (15-feet)-long stainless steel shell. Both the reboiler shell and tubes are constructed of 304L stainless steel. The shell is 0.64centimeter (1/4-inch) thick and the tubes are 14-~~-~~gauge steel. The reboiler is designed to distribute steam evenly and to prevent tube damage from water droplets that may be present in the steam.

Vapor-Liquid Separator (C-A-1). Process solution from the reboiler enters the vapor-liquid separator (C-A-1) via the upper recirculation line. Some of the solution flashes into vapor, which exits through a vapor line at the top of the vapor-liquid separator (C-A-1). The remaining solution (slurry) exits through the recirculation line at the bottom.

The vapor-liquid separator (C-A-1) consists of a lower and upper section. The lower (liquid) section is a stainless steel shell approximately 4.3 meters (14 feet) in diameter having ~~an~~a 85,200 to 98,400~~94,600~~ liter (22,500 to 26,000 gallon) normal operating capacity (including recirculation loop and reboiler). The maximum design capacity is 103,000 liters (27,200 gallons). The upper (vapor) section is a stainless steel shell 3.5 meters (11.5 feet) in diameter containing two deentrainment pads. These wire mesh pads remove liquids and solids that entrain into the vapor section of the vessel. Spray nozzles, using recycled process condensate or filtered raw water, wash collected solids from the deentrainment pads and vessel walls. Both sections of the vapor-liquid separator (C-A-1) are constructed of 0.95-~~-~~centimeter (3/8-inch)-thick stainless steel.

Operating parameters in the vapor-liquid separator (C-A-1) are monitored to provide an indication of process problems such as slurry foaming, deentrainer flooding, or excessive vapor temperatures. Instrumentation also is available to monitor the liquid levels in the vapor-liquid separator (C-A-1). Interlocks are activated when high pressures or high- or low-liquid levels are detected, shutting down the evaporation process and placing the facility in a safe configuration. The vapor-liquid separator (C-A-1) and recirculation loop can be flushed to remove any residual solids from the system and/or to reduce radiation levels. The most common flush solution is water, but dilute nitric or citric acid solutions could be used. All acidic flush solutions are chemically adjusted to meet DST acceptance criteria before transfer to the DST System. Antifoam solution is added (at very low flow rates - approximately 0.04 to 0.4 liters per minute) to the vessel to prevent foaming. The antifoam solution is a noncorrosive, nonregulated silicone-based solution that is compatible with the evaporator components.

Recirculation Pump. The stainless steel recirculation pump (P-B-1)~~,~~ is constructed as part of the recirculation loop to the reboiler. The 0.7-meter (28-inch) diameter axial flow pump has nominal flow rate of 49,210 to 60,567~~60,900~~ liters (13,000 to 16,000 gallons) per minute output. The recirculation pump is designed to handle slurry up to 30 percent undissolved solids by volume at specific gravities up to 1.8. The recirculation pump moves waste at high velocities through the reboiler to improve heat transfer, keep solids in suspension, and reduce fouling of the heat transfer surfaces.

The recirculation pump is equipped with shaft seals with high-pressure recycled process condensate (or water) introduced between the seals to prevent the waste solution from leaking out of the system. Seal water pressure and flow are monitored and controlled to shut down the recirculation pump if conditions are not adequate to prevent waste liquid from migrating into the seal water. The used seal water is routed to the feed tank.

Recirculation Loop. The recirculation loop consists of a 0.7-meter (28-inch) diameter stainless steel pipe that connects the vapor-liquid separator (C-A-1) to the recirculation pump and reboiler. The lower loop runs from the bottom of the vapor-liquid separator (C-A-1) to the recirculation pump inlet. The upper loop connects the pump discharge to the reboiler and the reboiler to the vapor-liquid separator (C-A-1). The feed line from the DST System feed tank and the slurry line to underground storage tanks are connected to the upper recirculation line.

Slurry System. The slurry system draws a portion of the concentrated waste from the upper recirculation loop and transfers it to the DST System. The major components of the slurry system are the slurry pump

and the slurry transfer pipelines. Figure 4.3 shows a simplified flow diagram of the slurry system. These components are described in the following paragraphs.

The slurry pump (P-B-2) is used to transfer slurry from the recirculation loop to the designated DST System ~~underground storage~~ tank~~s~~. The pump is driven by a variable speed motor and is constructed of 304L stainless steel. The slurry pump is designed to generate high pressures to alleviate the possibility of a transfer line plugging.

Interlocks control the operation of the slurry pump. The slurry pump (P-B-2) is shutdown if any of the following occur:

- Excessive pressure is detected in the slurry lines to 241-AW Tank Farm
- A leak is detected in the slurry transfer lines secondary containment
- A leak is detected in the 241-AW Tank Farm process pits (see Section 4.1.7.3.2)~~where the transfer lines enter the DST System~~.

The slurry pump uses a shaft seal with recycled process condensate (or water) and pressure and flow controls similar to the system described above for the recirculation pump.

Transfer pipelines are 5.1-centimeter (2-inch) diameter, carbon steel encased lines which route slurry to a designated underground DST within the 200 East Area. All transfer pipelines are encased in a secondary containment pipe and equipped with leak detectors between the primary and encasement piping. The pipelines are sloped to drain to the valve pit. The detection of any leak by the automated leak detection system shuts off the slurry pump. In lieu of the MCS automated shutdown, the slurry pump (P-B-2) can be manually shutdown at the direction of the Shift manager or 242-A Evaporator Control Room operator if a leak occurs.

The flow rate of the slurry transfer to the DST System is monitored and a decrease in flow below a specified value automatically will shut down the slurry pump (P-B-2) and initiate a line flush with water. The objective of flushing the transfer line is to prevent settling of solids, which precludes plugging the slurry transfer lines.

Samples can be taken from the recirculation loop~~slurry line~~ when needed via a sampler (SAMP-F-2) that is located near the feed sampler in the load out and hot equipment storage room.

~~4.1.3.1~~4.1.4 Condensate Collection Tank (TK-C-100) and Ancillary Equipment

The following section discusses the condensate collection tank (TK-C-100) and ancillary equipment. This equipment collects process condensate via the condensers in the vacuum condenser system, filters the condensate, and pumps the process condensate to LERF. Figure 4.4 provides a simplified process flow diagram showing the major components of the process condensate system. The following major components make up the process condensate system:

- Vacuum condenser system
- Condensate collection tank (TK-C-100)
- Process condensate pump (P-C-100)
- Condensate filters (F-C-1, ~~F-C-2,~~ and F-C-3)
- Process condensate radiation monitoring, sampling system and diversion system (RC3)
- Seal pot
- Process condensate recycle system
- Vessel Vent System

Vacuum Condenser System. Vapors removed from the vapor-liquid separator (C-A-1) flow to a series of three condensers where the vapors are condensed using raw water. Condensate drains to the condensate collection tank (TK-C-100). The vacuum condenser system consists of the following major components:

- Primary condenser (E-C-1)
- Intercondenser (E-C-2)

- Aftercondenser (E-C-3)
- Steam jet ejectors (J-EC1-1 and J-EC2-2)

Figure 4.5 provides a simplified process flow diagram showing the major components of the vacuum condenser system. These system components are discussed in the following sections.

Primary Condenser (E-C-1). Vapors drawn from the vapor-liquid separator flow through the 1.1-meter (42-inch) ~~(3.5 feet)~~ vapor line, into the E-C-1 condenser where the majority of the condensation takes place. Noncondensed vapors exit to the intercondenser (E-C-2) while the condensed vapors (process condensate) drain to the condensate collection tank (TK-C-100). Cooling water passes through the cooling tubes and exits to TEDF.

The carbon steel condenser shell measures approximately 5.3 meters (17.4 feet) long and has a 2.2-meter (7.2-~~-~~feet) inside diameter. The condenser consists of 2,950 equally spaced carbon steel tubes that are 3.6 meters (11.8 feet) long with a 1.9-centimeter (0.75-~~-~~inch~~es~~) outside diameter.

Intercondenser (E-C-2). Noncondensed vapors from E-C-1 enter the intercondenser. The vapor stream contacts the cooling tubes in the condenser where cooling water provides additional condensation. The condensate drains to the condensate collection tank (TK-C-100). Noncondensed vapors and used cooling water are routed to the after condenser.

The carbon steel intercondenser measures 2.2 meters (7.2 feet) long with a 0.39 meter (1.3 feet) inside diameter. This heat exchanger contains 144 tubes that are 1.7 meters (5.6 feet) long with a 1.9-centimeter (0.75 inches) outside diameter.

After-condenser (E-C-3). Vapor discharged from the intercondenserenters the after condenser. Cooling is supplied to the after condenser by the cooling water from the intercondenser. Condensate is routed to the condensate collection tank (TK-C-100), while the noncondensed vapors are filtered, monitored, and discharged to the atmosphere through the vessel ventilation system. The cooling water is discharged to TEDF.

The carbon steel after condenser measures 2.3 meters (7.5 feet) long and has a 0.20-meter (0.66 feet) inside diameter. This heat exchanger contains 45 tubes that are 1.8 meters (5.9 feet) long with a 1.9-centimeter (0.75 inches) outside diameter.

Steam Jet Ejectors. The vacuum that draws the vapors from vapor-liquid separator (C-A-1) into the condensers is created by a two-stage steam jet ejector system. The first-stage jet ejector (J-EC1-1) maintains a vacuum on the primary condenser, which in turn creates a vacuum on the vapor-liquid separator. The ejector consists of a steam jet, pressure controller, and air bleed-in valve. Steam and noncondensed vapors from the primary condenser are ejected fromJ-EC1-1 into the intercondenser. The desired vacuum is obtained by controlling steam pressure and bleeding ambient air as necessary into the vapor header through an air intake filter. The second-stage jet ejector (J-EC2-1) creates the vacuum that moves vapors from the intercondenser through the after condenser.

Condensate Collection Tank (TK-C-100). Process condensate from the primary condenser, intercondenser, after condenser, and the vessel ventilation system drain to the condensate collection tank (TK-C-100). The tank is 4.3 meters (14 feet) in diameter, 5.8 meters (19 feet) high, and is constructed of 0.79-centimeter (0.31 inches)-thick stainless steel. The tank has a maximum design capacity of about 67,400 liters (17,800~~5~~ gallons). Normal operating volume is approximately 50 percent of the tank capacity. A carbon steel base supports the tank. An agitator is installed but not used.

In the event of a tank overflow, the solution is routed through an overflow line to the drain system, which returns waste to the feed tank (241-AW-102). Overflow occurs when the volume exceeds about 60,600 liters (16,000 gallons). The overflow line is equipped with a liquid filled trap to isolate the drain system from the tank.

~~Process feed~~ Candidate feed tank waste samples are evaluated for the presence of a separate organic layer as described in the Waste Analysis Plan (Chapter 3.0) and process controls are used to reduce the risk of

the condensate collection tank (TK-C-100) to receive small amounts of immiscible organics with the condensed waste. If detected, the organic layer is removed by overflowing the condensate collection tank (TK-C-100) back to the feed tank 241-AW-102. The liquid level in the tank is controlled well above the discharge pump intake point and a controlled overflow is conducted upon completion of each processing cycle (campaign) to ensure that an organic layer does not accumulate and cannot be pumped to LERF.

Process Condensate Pump. A pump (P-C-100) moves the process condensate from the condensate collection tank (TK-C-100) through the condensate filter to LERF. The process condensate pump is a centrifugal pump constructed of 316 stainless steel.

Condensate Filters. After leaving the condensate collection tank (TK-C-100), the process condensate is filtered to remove solids. The primary condensate filter (F-C-1) has a welded steel housing. A second filter system (F-C-3), installed downstream is also used to filter the process condensate. This system has duplex in-line filters in cast iron housing. Both filters employ a filter material that is compatible with the process condensate.

Process Condensate Radiation Monitoring, Sampling and Diversion System. The process condensate transferred to LERF is monitored continuously for radiation. If radiation levels exceed established limits, an alarm is received and interlocks immediately divert the stream back to the condensate collection tank (TK-C-100), or the feed tank and shut off the process condensate pump. This ensures process condensate containing excessive radionuclides due to an accidental carryover from the vapor-liquid separator (C-A-1) is not transferred to LERF.

Seal Pot. The condensate collection tank (TK-C-100) receives condensed liquids from the vessel ventilation system. A seal pot collects the drainage before discharge into the condensate collection tank (TK-C-100) and isolates the tank from the vessel ventilation system.

Condensate Recycle System. For waste minimization, a portion of the process condensate from the condensate collection tank (TK-C-100) is recycled for use as decontamination solution for the deentrainment pad sprays and seal water for the recirculation pump (P-B-1) and slurry pump (P-B-2). Use of process condensate instead of raw water results in approximately 10 percent reduction in waste volume generated during continuous operation of the 242-A Evaporator. Filtered raw water also is available as a backup for sprays and seal water. A 5.1-centimeter (2-inch (5.1 centimeters) diameter carbon steel line, stainless steel centrifugal pump (P-C-106), and filters (F-C-5 and F-C-46) supply process condensate from condensate collection tank (TK-C-100) to the pad sprays and pump seals. The filters are disposable cartridge filters in carbon steel housings arranged in parallel with one filter in service while the other is in standby.

4.1.44.1.5 Integrity Assessments

The integrity assessment reportIARs are maintained in the Hanford Facility Operating Record, 242-A Evaporator unit-specific portion (Appendix 4B, Integrity Assessment Report) discusses:

- The standards used during design and construction of the 242-A Evaporator and the adequacy of those standards
- The characteristics of the DST System waste processed
- The adequacy of the materials of construction to provide corrosion protection from the waste processed
- The age of the tanks and the aeffect of age on tank integrity
- The results of the leak tests, visual inspections, and tank wall thickness inspections
- The frequency and scope of future integrity assessments
- Deficiencies in secondary containment design. These deficiencies are discussed in- the integrity assessment reportIARs.

An ~~i~~Independent~~,~~ ~~q~~Qualified~~,~~ ~~r~~Registered ~~p~~Professional ~~e~~Engineer (IQRPE) certified the integrity assessment.

The inspections, tests, and analyses performed provide assurance that the 242-A Evaporator tank system has adequate design, sufficient structural strength, and sufficient compatibility with the waste to not collapse, rupture, or fail during operation. No evidence of degradation was noted during the visual test, ultrasonic test, or leak test. Both the condensate collection tank (TK-C-100) and the vapor-liquid separator (C-A-1)/reboiler loop passed leak tests. The frequency of subsequent integrity assessments has been established at every 10 years. This frequency is based on the results of the ~~1998~~ 2008 IARs ~~integrity assessments~~ transmitted to Ecology on May 27, 2008, which include:

- *IQRPE Integrity Assessment Report for the 242-A Evaporator Tank System*, RPP-RPT-33306, Revision 0, 2007.
- *Integrity Assessment Report for the 242-A PC-5000 Transfer Pipeline*, RPP-RPT-33307, Revision 0, 2007.
- *IQRPE Integrity Assessment Report for the 242-A Evaporator Tank System*, RPP-RPT-33306, Revision 0-A.IQRPE, 2008.

~~4.1.4.1~~4.1.5.1 Transfer Line (PC-5000)

An integrity assessment for the PC-5000 transfer line was performed, including a hydrostatic leak/pressure test at 10.5 kilograms per square centimeter gauge (150 pounds per square inch). A statement by an ~~independent, qualified, registered professional engineer~~ IQRPE attesting to the integrity of the piping system is included in the latest IAR~~Integrity Assessment Report *for the 242-A Evaporator/LERF Waste Transfer Piping, Project W105* (WHC 1993)~~, along with the results of the leak/pressure test. The next integrity assessment for the PC-5000 transfer line will be completed on or before May 27, 2018, in accordance with the 2008 IARs~~conducted in the calendar year 2008~~. The schedule for conducting integrity assessments will be at a frequency of every 10- ~~(calendar)~~ years unless otherwise required by an IQRPE or as required for system repairs and upgrades. All integrity assessments will be conducted in accordance with WAC 173-303-640.

~~4.1.5~~4.1.6 Additional Requirements for Existing Tanks

Refer to information in Section 4.1.1~~2~~ and the IARs~~integrity assessment report~~, which includes measuring tank wall thicknesses, evaluating corrosion protection, and performing leak tests.

~~4.1.6~~4.1.7 Secondary Containment and Release Detection for Tank Systems

This section describes the design and operation of secondary containment sumps, drain lines, and leak detection systems for the 242-A Evaporator.

~~4.1.6.1~~4.1.7.1 Requirements for All Tank Systems

The Construction Specification for 242-A Evaporator-Crystallizer Facilities Project B-100 (*Construction Specification for 242-A Evaporator-Crystallizer Facilities Project B-100, B-100-C1, Automated Industries, Vitro Engineering Division, Richland Washington,* Vitro 1974) was used during preparation, design, and construction of the tank and secondary containment systems. The ~~integrity assessment report~~ 2008 IARs detail~~s~~ how the construction specification relates to the national codes and standards.

Constructing the building and vessels per this specification ensures that foundations are capable of supporting tank and secondary containment systems and that uneven settling and failures from pressure gradients do not occur. The 2008 IARs~~integrity assessment report~~ ~~(Appendix 4B)~~ state~~s~~ that the "*242-A Evaporator has adequate design, sufficient structural strength, and sufficient compatibility with the wastes to not collapse, rupture, or fail during service loads associated with normal operations and that the building structure was designed and constructed to withstand a design basis earthquake*".

The 2008 IARs~~integrity assessment report (Appendix 4B)~~ describe~~s~~ the building and secondary containment system. This system is designed to ensure any release is detected within 24 hours. The secondary containment system also is designed to contain 100 percent of the maximum operating capacity of the vapor-liquid separator (C-A-1)/reboiler loop, and the drain systems are sloped to allow collection of solution and have sufficient capacity to drain this volume in less than the required 24 hours.

The IAR~~integrity assessment report~~ describes the protective coating material and sealant used to protect concrete and joints from attack by leaks to the secondary containment. The materials of construction for the sump and drain lines are also compatible with the waste processed at the 242-A Evaporator.

~~4.1.6.2~~4.1.7.2 242-A Building Secondary Containment

The 242-A Building serves as a secondary containment vault for the vapor-liquid separator (C-A-1), condensate collection tank (TK-C-100), and ancillary equipment used for transferring mixed waste at the 242-A Evaporator. The concrete for the operating area was poured to form a monolithic structure. Where needed, joints in the concrete were fabricated with preformed filler conforming to the standards of the American Society of Testing and Materials. Joint filler is sealed with a polysulfide sealant per the requirements of the construction specifications (*Construction Specification for 242-A Evaporator-Crystallizer Facilities Project B-100, B-100-C1, Automated Industries, Vitro Engineering Division, Richland Washington,* Vitro 1974).

Before restart in 1994, a new acrylic special protective coating was applied to the concrete in the pump, evaporator, and condenser rooms. The coating meets the requirements of the construction specifications (*Construction Specification for 242-A Evaporator-Crystallizer Facilities Project B-100, B-100-C1, Automated Industries, Vitro Engineering Division, Richland Washington,* Vitro 1974), including resistance to very high radiations doses, temperatures of 170°F (77~~o~~°-C), and spills of 25 percent caustic solution. The protective coating is maintained.

The following six rooms contain equipment used to process or store*mixed waste:

- Pump room
- Evaporator room
- Condenser room
- Ion exchange room
- Loading ~~out~~ room* (used for temporary storage of mixed waste)
- Loadout and ~~H~~hot equipment storage room.

~~4.1.6.2.1~~4.1.7.2.1 Pump Room

The pump room secondary containment walls are 0.38 to 0.56-meter (1.25 to 1.84-feet) thick reinforced concrete. The secondary containment floor is 0.51-meter (20-inch)-thick reinforced concrete. The pump room floor is lined with 0.64-centimeter (0.25-inch) stainless steel and the concrete walls and ceiling cover blocks are painted with a special protective coating. The pump room contains pipe jumpers used to transport feed and slurry solutions between the vapor-liquid separator and the DST System, and the process recirculation loop, recirculation pump (P-B-1), and slurry pump (P-B-2).

Leaks in the pump room collect in the pump room sump, a 1.5-meter (4.9-feet) by 1.5-meter (4.9-feet) by 1.8-meter (5.9 feet) deep sump with a 0.64-centimeter (0.25-inch) stainless steel liner. The pump room sump collects spills from various sources for transfer to the feed tank, 241-AW-102. Figure 4.6 provides a simplified process flow schematic of sources, which drain to the pump room sump. Drainage to the sump includes:

- Leaks to the pump room floor from equipment in the pump room
- Evaporator room floor drain
- Loadout and ~~H~~hot equipment storage room floor drain
- Loading ~~out~~ room floor drain
- Raw water backflow preventer drain

Solution in the pump room sump is transferred to the feed tank (241-AW-102) using a steam jet. A 25-centimeter (10-inch) secondary containment overflow line is provided for draining large volumes of solution should a catastrophic tank failure occur. Because the overflow line provides a direct path between the air space of tank 241-AW-102 and the pump room, a minimum level of water must be maintained in the sump to prevent cross ventilation. A leak into the pump room sump would be detected by a rise in the sump level. Instrumentation provided alarms on high sump level.

The recirculation and slurry pumps in the pump room are equipped with mechanical seals having pressurized water introduced between the seals. The seal water is maintained at a pressure that exceeds the process pressure at the seal to ensure water leaks into the process solution, but waste solution does not leak out. Water from seal leakage is collected in funnels in the pump room and routed to feed tank 241-AW-102 via the 25-centimeter (10-inch) overflow line described previously.

~~4.1.6.2.2~~4.1.7.2.2 Evaporator Room

The evaporator room secondary containment walls are 0.56-meter (22-inch)-thick reinforced concrete. The secondary containment floor is 0.51-meter (20-inch)-thick reinforced concrete. The evaporator room contains the vapor-liquid separator vessel (C-A-1), part of the recirculation loop, the reboiler, the 1.1-meter (42-inch) vapor line, and line used to empty the vapor-liquid separator to feed tank 241-~~-~~AW-~~-~~102.

Leaks in the evaporator room flow to a floor drain that routes through a 7.6-centimeter (3-inch) line to the pump room sump described in Section 4.1.7.2.1~~4.1.6.2.1~~. A leak in the evaporator room would be detected by a rise in the pump room sump level. The floor of the evaporator room and a portion of the pump room floor are 3.0 meters (9.8 feet) below grade to contain the entire contents of the vapor-liquid separator, reboiler, and recirculation loop in the event of a catastrophic failure. The floor and walls of the evaporator room up to an elevation of 1.8 meters (5.9 feet) are painted with a special protective coating.

~~4.1.6.2.3~~4.1.7.2.3 Condenser Room

The condenser room secondary containment walls are 0.30~~6~~- to 0.56-meter (12 to 22-inch)-thick reinforced concrete. The secondary containment floor is 0.51-meter (20-inch)-thick reinforced concrete. The condenser room contains all the components of the process condensate system described in Section 4.1.4~~3.1~~ (refer Figure 4.4), including the condensate collection tank TK-C-100.

Leaks in the condenser room flow to two floor drains that join and route through a 15-centimeter (6-inch) line to feed tank 241-AW-102. Leaks in the condenser room are detected by the following:

- Unexpected changes in liquid level in the condensate collection tank (TK-C-100). Instrumentation is provided to monitor liquid level in the tank, including high- and low-level alarms.
- Daily visual inspections of process condensate system components and piping.

The floor and walls of the condenser room up to an elevation of 1.2 meters (3.9 feet) are painted with a special protective coating.

~~4.1.6.2.4~~4.1.7.2.4 Loading Room and Loadout and Hot Equipment Storage Rooms

The loadout and hot equipment storage rooms ~~secondary containment~~ walls are 0.30- to 0.56-meter (12 to 22-inch~~0.98- to 1.84-feet~~) thick reinforced concrete. The ~~secondary containment~~ floors are 0.15-meter (0.49-feet) thick reinforced concrete. The room contains two recirculation lines and samplers used to sample the feed and slurry streams. The feed sampler has been isolated and is no longer capable of sampling feed. The lines and samplers are located in a shielded enclosure adjacent to the pump room wall.

The load~~-~~-out and hot equipment storage room contains two sumps: the drain sump and decontamination sump. The sumps are approximately 0.91 meter (3 feet) in diameter, about 1.2 meters (4 feet) deep, and lined with stainless steel. Both sumps drain via a 7.6-centimeter (3-inch) drain line to the pump room

sump described in Section 4.1.7~~6~~.2.1. The sumps, floor, and walls of the load out and hot equipment storage room up to an elevation of 3.8 meters (12.5 feet) are painted with a special protective coating.

Leaks in the sampler piping, flow into two drains in the sample enclosure that~~, which~~ drain via a 5.1-centimeter (2-inch) line to the decontamination sump, which drains to the pump room sump (described in Section 4.1.7~~6~~.2.1). Leak detectors in the sampler enclosures or a rise in the pump room sump level detects leaks in the sampler piping.

~~4.1.6.2.5~~4.1.7.2.5 242-A Building Drain Lines

Figure 4.6 provides a simplified process flow schematic of sources routed to the 242-A Building drain lines. The 242-A treatment, storage, and/or disposal (TSD) unit boundary includes these lines up until they exit the 242-A Building. At this point, the lines are considered DST ~~s~~System components. Four lines serve to drain the 242-A Building and equipment to feed tank 241-AW-102:

- Pump room sump drain line (DR-334): ~~a~~ 25-centimeter (10-inch) carbon steel line that transfers process condensate overflow/diverted liquids and empty out of the pump room sump to the feed tank
- Vapor-liquid separator vessel drain line (DR-335): ~~a~~25-centimeter (10-inch) carbon steel line that allows gravity drain of the vessel to the feed tank 241-AW-102
- Condenser room drain line (DR-343): ~~a~~ 15-centimeter (6-inch) carbon steel line that drains potential leakage from the condenser room.
- Diverted process condensate drain line (DR-338): process condensate liquid drains through DR-338 into sump drain line (DR-334) which drains to 241-AW-102.

The four lines are sloped to drain about 170 meters (560 feet) to feed tank 241-AW-102 via the drain pit (241-AW-02D). Although WAC 173-303-640(1)(c) exempts systems that serve as secondary containment from requiring secondary containment, drain line DR-334, DR-335, and DR-338 have outer encasement piping and are part of the DST System.

The drain lines are connected to a cathodic protection system to prevent external corrosion from contact with the soil. The cathodic protection system consists of:

- A rectifier that converts supplied alternating current voltage to an adjustable direct current voltage
- Numerous anodes buried near the underground piping and connected to the rectifier.
- Return wiring that connects the piping to the rectifier, completing the circuit.
- The rectifiers are inspected to ensure component degradation has not occurred. Test stations along the system are checked annually to verify they meet the performance criteria established by the National Association of Corrosion Engineers (RP-02-85). The criteria used to determine compliance will be documented in the Hanford Facility Operating Record, 242-A Evaporator unit specific portion.

Further detail regarding design and construction of DR-334,-335,-338 and -343 is provided in DOE/RL-90-39 (Hanford Facility Dangerous Waste Permit Application Double-Shell Tank System). Further detail regarding the design, operation, maintenance, and inspection of the cathodic protect system for these lines are also provided in DOE/RL-90-39.

~~4.1.6.3~~4.1.7.3 Transfer Line Containment

This section describes the design and operation of secondary containment and leak detection systems for transfer lines between the DST System and the 242-A Evaporator, and from 242-A Evaporator to LERF ~~(one line only, PC-5000)~~. The 242-A Evaporator TSD unit boundary for lines running between the 242-A Evaporator and the DST System ends at the exterior wall of 242-A building. At this point, these

lines (e.g., feed and slurry line piping [SN-269, SN-270, SL-167, and SL-168]) are DST System components~~. For further detail regarding SN-269, SN-270, SL-167, and SL-168 refer to DOE/RL-90-39~~.

The PC-5000 transfer line transfers process condensate (Section 4.1.2) from the 242-A building to LERF. The 242-A Evaporator TSD unit boundary includes the PC-5000 transfer line up to the LERF ~~fence line~~ TSD unit boundary (Part A Form, Chapter 1.0,~~ topographic map,~~ and Section 4.1.2~~, for the TSD unit boundary~~).

~~4.1.6.3.1~~4.1.7.3.1 Feed Line Piping

Two feed lines (SN-269 and SN-270) (one in service and one spare), each consist of 7.6-centimeter (3-inch) transfer piping within a 15-centimeter (6-inch) secondary containment encasement piping. Both the transfer and encasement pipes are constructed of Schedule 40 carbon steel. The lines run below grade about 120 meters (400 feet) from pump pit 241-AW-02E (above feed tank 241-AW-102) to the 242-A Building.

To detect transfer-piping failures, leak detector risers equipped with conductivity probes are installed on the encasement lines. The transfer piping and encasements are sloped towards the conductivity probe, which, on leak detection, annunciates an alarm in the 242-A Evaporator control room. A valve in the pump pit (241-AW-02E) can be opened to drain solution from the encasement pipe into the pit, which drains to feed tank 241-AW-102.

~~4.1.6.3.2~~4.1.7.3.2 Slurry Line Piping

The slurry pump (P-B-2) transfers mixed waste ~~solution~~ through one of two transfer lines: SL-167, for transfer to valve pit 241-AW-B (standard configuration), or SL-168 for transfer to valve pit 241-AW-A (alternate configuration). Slurry solution can be routed via double-encased piping from these valve pits to any designated DST System slurry receiver tank. Both slurry transfer lines consist of 5.1-centimeter (2-inch) transfer piping within a 10.2-centimeter (4-inch) secondary containment encasement piping. Both the transfer and encasement pipes are constructed of Schedule 40 carbon steel. The lines run below grade about 73 meters (240 feet) between the 242-A Building and the valve pits.

These slurry lines contain leak detector risers and conductivity probes similar to the feed line piping described in Section 4.1.7~~6~~.3.1.

~~4.1.6.3.3~~4.1.7.3.3 PC-5000

The process condensate transfer line (PC-5000) from the 242-A Evaporator is centrifugally cast, fiberglass-reinforced epoxy thermoset resin pressure pipe fabricated to meet the requirements of ASME D2997 (ASME 1984). The 7.6-centimeter (3-inch)~~ (7.6-cm)~~ carrier piping is centered and supported within 15-centimeter (6-inch) ~~(15.2-cm)~~ containment piping. Pipe supports are fabricated of the same material as the pipe, and meet the strength requirements of ANSI B31.3 (ANSI 1987) for dead weight, thermal, and seismic loads.

Drawing H-2-79604 provides details of the piping from the 242-A Evaporator to LERF.

This permit includes the portion of the PC-5000 transfer line leaving the 242-A Evaporator ~~facility~~ to the ~~fence line~~ TSD unit boundary of LERF (Part A Form, Chapter 1.0~~ and topographic maps for unit boundary~~).

Single-point electronic leak detection elements are installed along the transfer line at 305-meter (1000 foot) intervals. The leak detection elements are located in the bottom of specially designed test risers. Each sensor element employs a conductivity sensor, which provides a signal to the 242-A Evaporator control room when a potential leak is detected. If a leak develops in the primary~~carrier~~ pipe, fluid will travel down the exterior surface of the ~~carrier~~ primary pipe or the interior of the containment pipe. As moisture contacts a sensor unit, a general alarm sounds in the 242-A Evaporator control room on the MCS~~Monitoring Control System~~. In addition, the zone of the sensor unit causing the general alarm can be determined using the leak detection-monitoring panel. Upon verification of a leak, the pump located in the 242-A Evaporator is shut-down, stopping the flow of aqueous waste through the

transfer line. A low-volume air purge of the annulus between the primary~~carrier~~ pipe and the secondary containment pipe is provided to prevent condensation buildup and minimize false alarms by the leak detection elements.

If a leak is detected using visual inspection of the PC-5000 transfer line encasement at the encasement catch tank (TK-PC-101) in the LERF catch basin (242AL-43), the shift manager is notified. The Shift Manger will direct shutdown of the aqueous waste through the PC-5000 transfer line.

~~4.1.6.4~~4.1.7.4 Additional Requirements for Specific Types of Systems

Addressed in this section are additional requirements in WAC 173-303-640 for vault systems like the 242-A Building to ensure neither buildup of ignitable vapors nor does infiltration of precipitation occur. This section also addresses secondary containment for ancillary equipment and piping associated with the tank systems.

~~4.1.6.4.1~~4.1.7.4.1 Vault Systems

The 242-A Building is a vault constructed partially below ground, providing secondary containment for the tank systems. The DST System waste processed at the 242-A Evaporator is designated ignitable and reactive because of the presence of nitrite and nitrate salts, which are considered oxidizers per 49 CFR 173. Because of their low volatility, these compounds are unlikely to be present in the vapor phase of the tank systems at the 242-A Evaporator. However, to prevent the spread of contamination, the vapor-liquid separator (C-A-1) is ventilated and maintained at lower air pressure than the building air space. This ensures air leakage is from uncontaminated building air space into the tank vapor space. Vapors from the vapor-liquid separator (C-A-1) flow to the vacuum condenser system described in Section 4.0.

The condensate collection tank (TK-C-100), collects process condensate that is not designated ignitable or reactive.

The tank systems and ancillary equipment are located within the 242-A Building, which is completely enclosed to prevent run-on and infiltration of precipitation into the secondary containment system.

~~4.1.6.4.2~~4.1.7.4.2 Ancillary Equipment

The 242-A Building provides secondary containment for ancillary equipment. Double containment is provided for the feed and slurry transfer lines between the 242-A Building and the AW Tank Farm by pipe-in-pipe arrangements. Therefore, all ancillary equipment has secondary containment and the daily inspection requirements in (4)(f) are not applicable.

~~4.1.7~~4.1.8 Variances from Secondary Containment Requirements

The ~~integrity assessment report~~IARs identified in Section 4.1.5 ~~(Appendix 4B)~~ discuss~~es~~ the following three deficiencies associated with the secondary containment system:

Pump Room Sump. The pump room sump does not comply with secondary containment requirements because liquid must be kept in the sump to provide a seal to prevent airflow between the pump room and feed tank 241-AW-102. Although the sump has a 0.63-centimeter (0.25-inch)-thick stainless steel liner to prevent corrosion of the concrete floor, the sump does not have secondary containment.

Routine Discharges through Secondary Containment. The configuration of the 242-A Evaporator process requires routine, batch discharges of dangerous waste through secondary containment drain lines. These routine discharges include the following.

- Steam condensate, cooling water, and process condensate sample stations drain to the feed tank, 241-AW-102, through drain line DR-343. Total discharge is about 38 liters (10 gallons) per month during operation.

- Sample bottle water sprays down in the slurry sample station drains to the decontamination sump in the load out and hot equipment storage room. The decontamination sump then drains to the pump room sump. Total discharge is about 76 liters (20 gallons) per month during operation.

Transfer Piping Wall Penetrations. Three dangerous waste transfer line piping sections passing through the 242-A Building wall are single-walled, i.e., no secondary confinement in the wall (about 56-centimeter (22-inch)-thick reinforced concrete).

These deficiencies were identified to Ecology, October 28, 1993. http://pdw.hanford.gov/arpir/index.cfm/viewDoc?accession=D196105854Ecology's response stated, "No physical revision of the pipe wall penetrations or the floor drains in the evaporator pump room will be required prior to evaporator restart". The response required the following.

- If at any time leakage is seen or detected from these installations, or if for any reason these installations are repaired or rebuilt, they will be rebuilt or repaired in accordance with regulations.
- Should a spill occur in the evaporator pump room the sump and the piping shall be rinsed three times as required in WAC 173-303-160, as appropriate. 'Appropriate' in this case means that the original regulation was written for a free container, not a sump, so that judgment will have to be used in the application of the regulation. The rinsate shall be transferred to the double-shell tanks.

~~4.1.8~~4.1.9 Tank Management Practices

All waste to be processed at the 242-A Evaporator must be sampled to determine if the waste is compatible with the materials of construction at the 242-A Evaporator. Before each campaign, candidate feed tanks are sampled per the requirements of the W~~w~~aste ~~a~~Analysis ~~p~~Plan (Chapter 3.0). Based on the results, three possible options are implemented.

- The waste is acceptable for processing without further actions.
- The waste is unacceptable for processing as a single batch, but is acceptable if blended with other waste that is going to be processed.
- The waste is unacceptable for processing.

The 242-A Evaporator process is controlled by operators using the MCS. The MCS computer monitors liquid levels in the vapor-liquid separator (C-A-1) and condensate collection tank (TK-C-100). The MCS system manages liquid levels in the vapor-liquid separator (C-A-1) using an auto-cascade function that controls feed delivery to the vapor-liquid separator (C-A-1)~~ vessel~~. The MCS system also manages liquid levels in the condensate collection tank (TK-C-100) using an auto-cascade function to maintain the tank level at approximately 50-percent. The MCS has alarms that annunciate on high-liquid levels for both the vapor-liquid separator (C-A-1) and condensate collection tank (TK-C-100) to notify operators that actions must be taken to prevent overfilling of these vessels.

An interlock is activated when high-liquid level in the vapor-liquid separator (C-A-1) is detected, automatically shutting down the feed transfer pump at feed tank 241-AW-102, thereby preventing overfilling of the vessel and carryover of slurry into the process condensate system. The condensate collection tank (TK-C-100) has an overflow line that routes solution to feed tank 241-AW-102 in case of overfilling.

Process and instrumentation drawings are listed in Section 4.3.

The MCS also provides an automated interlock to shutdown the ~~recirculation pump (P-B-1)~~process condensate pump (P-C-100) and slurry pump (P-B-2) if a leak is detected. The process condensate pump (P-C-100), recirculation pump (P-B-1), and slurry pump (P-B-2) ~~will~~ can be shutdown automatically using the MCS interlock ~~and/~~or manually at the direction of the Shift Manager or 242-A Evaporator Control Room Operator if a leak occurs.~~ The process condensate pump (P-C-100) will be shut down~~

~~manually at the direction of the Shift Manager or 242-A Evaporator Control Room Operator if a leak occurs.~~

~~4.1.9~~4.1.10 Labels or Signs

A labeling upgrade was completed before restart in 1994 for condensate collection tank TK-C-100 to identify the waste contents and major risks associated with waste stored within the tank. http://apps.leg.wa.gov/WAC/default.aspx?cite=173-303-640Condensate collection ~~T~~tank TK-C-100 ancillary piping is labeled "PROCESS CONDENSATE" to alert trained personnel which pipes in the condenser room contain dangerous waste. The vapor-liquid separator (C-A-1) is located in the evaporator room, a normally unoccupied area. This area is posted as a high radiation area with as low as reasonably achievable (ALARA) access controlled and limited to ~~trained~~ personnel in accordance with Personnel Training (Chapter 8.0)~~only~~. The tank labels are visible from the walls of the tank enclosure rooms, which are less than 15 meters (50 feet) from the tank systems; therefore, label visibility requirements are met.

~~4.1.10~~4.1.11 Air Emissions

Tank systems that contain extremely hazardous waste, and is acutely toxic by inhalation must be designed to prevent the escape of such vapors. The DST System waste in the vapor-liquid separator~~,~~ (C-A-1)~~,~~ is designated extremely hazardous waste; however, no determination has been performed to determine if the waste is acutely or chronically toxic. Most of the toxic compounds in the DST waste are not volatile, but because of the high radioactivity of the waste, controls are included to prevent or mitigate the release of tank vapors. The vapor-liquid separator (C-A-1) is maintained under vacuum to ensure air leakage is from uncontaminated building air space into the tank vapor space. The ~~boiling~~ vapor in the vapor-liquid separator (C~~-~~-A~~-~~-1) passes through deentrainment pads ~~and sprays~~ to prevent liquid and solid carryover into condensers (E-C-1, E-C-2, and E-C-3)~~the vapor section of the tank~~. The vapor stream passes through the three condensers that remove the condensable components. The noncondensable vapors pass through high-efficiency particulate air (HEPA) filters before being discharged to the environment.

~~4.1.11~~4.1.12 Management of Ignitable or Reactive Wastes in Tank Systems

Although the DST System waste reprocessed at the 242-A Evaporator is designated ignitable because of the presence of oxidizers (nitrates and nitrites), the waste does not meet the definition of a combustible or flammable liquid given in National Fire Protection Association (NFPA) code number 30 (NFPA 1996). The buffer zone requirements in NFPA-30, which require tanks containing combustible or flammable solutions be a safe distance from each other and from public way, are not applicable.

An analysis is performed on the DST System waste to be processed to verify the waste does not react exothermically at the elevated temperatures at the 242-A Evaporator. The ~~w~~Waste ~~a~~Analysis ~~p~~Plan (Chapter 3.0) discusses waste acceptance requirements due to the reactive waste designation.

~~4.1.12~~4.1.13 Management of Incompatible Wastes in Tank Systems

Waste transferred to the 242-A Evaporator must be compatible before mixing. The ~~w~~Waste ~~a~~Analysis ~~p~~Plan (Chapter 3.0) includes waste compatibility requirements.

4.2 Air Emissions Control

This section addresses the requirements of Air Emission Standards for Process Vents, under 40 CFR 264 Subpart AA (incorporated by reference in WAC 173-303-690).

4.2.1 Applicability of Subpart AA Standards

The 242-A Evaporator performs distillation that specifically requires evaluation of process vents for the applicability of 40 CFR 264 Subpart AA.

Waste processed at the 242-A Evaporator routinely contains greater than 10 parts per million organic concentrations; therefore, organic air emissions are subject to 40 CFR 264.1032, which requires organic emissions from all affected vents at the Hanford Facility be less than 1.4 kilograms (3 pounds) per hour

and 2.8 megagrams (3.1 tons) per year, or control devices be installed to reduce organic emissions by 95%.

The 242-A Evaporator has one process ventilation system that vents both the vapor-liquid separator (C-A-1) and the condensate collection tank (TK-C-100). The vent lines from both tanks combine before entering an off-gas system consisting of a deentrainer, a prefilter/demister, HEPA filters, and an exhaust fan. The vessel vent off-gas system is located on the third floor of the condenser room, with the exhaust stack extending horizontally through the east wall of the building at an elevation of approximately 14.7 meters (48 feet) above ground level. The exhaust stack bends to run vertically with the discharge point approximately 18.6 meters (61 feet) above ground level.

~~The annual average flow rate for the vessel vent is given in *Radionuclide Air Emissions Report for the Hanford Site - Calendar* Year *1995* (DOE-RL 1996) as 18 cubic meters per minute and the total annual flow was 9.6 E+06 cubic meters.~~ During waste processing, the airflow is about 20.5 cubic meters (720 cubic feet) per minute, with about 4.3 cubic meters (150 cubic feet) per minute ventilated from the condensate collection tank (TK-C-100) and the remainder from the vapor-liquid separator (C-A-1) and air in leakage.

Organic emissions occur during waste processing, which is less than 6 months (182 days) each year. This is the maximum annual operating time for the 242-A Evaporator, as shutdowns are required during the year for maintenance outages, candidate feed tank analysis, and establishing transfer routes for staging waste in the DST System. ~~The total operating time for the two campaigns in 1994 was 86 days.~~

4.2.2 Process Vents - Demonstrating Compliance

This section outlines how the 242-A Evaporator complies with the requirements of 40 CFR 264, Subpart AA, including a discussion of the basis for meeting the organic emission limits, calculations demonstrating compliance, and conditions for reevaluating compliance.

4.2.2.1 Basis for Meeting Limits/Reductions

The TSD units at the Hanford Facility subject to 40 CFR 264, Subpart AA meet the organic air emission limits of 1.4 kilograms (3 pounds) per hour and 2.8 megagrams (3.1 tons) per year, established in 40 CFR 264.1032, by the design of the facility. The 242-A Evaporator and the other TSD units collectively can meet these standards without the use of air pollution control devices.

4.2.2.2 Demonstrating Compliance

Process vent organic air emissions are controlled by establishing limits for acceptance of waste at the 242-A Evaporator. Before startup of each campaign, the waste to be processed is sampled in the DST System to determine the organic content. If the concentrations of organic constituents are less than the limits in the ~~w~~Waste ~~a~~Analysis ~~p~~Plan (Chapter 3.0), the waste can be processed, provided the Hanford Facility will not exceed 1.4 kilograms (3 pounds) per hour and 2.8 megagrams (3.1 tons) per year. The waste acceptance limits in the ~~w~~Waste ~~a~~Analysis ~~p~~Plan (Chapter 3.0) are based on equilibrium calculations and assumptions given in *Organic Emission Calculations for the 242-A Evaporator Vessel Vent System* (WHC 1996). The calculation to determine organic emissions consists of the following steps:

1. Determine the emission rate of each candidate feed tank organic constituent by multiplying the constituent concentration by the corresponding partition factor in *Organic Emission Calculations for the 242-A Evaporator Vessel Vent System* (WHC 1996).

2. Sum the emission rates of all organic constituents to determine the emission rate for the candidate feed tank. The maximum emission rate for the campaign is the rate from the candidate tank with the greatest emission rate.

3. Determine the total amount of emission during the campaign by using operating time and a weighted average emission rate, based on the volume of each candidate feed tank processed.

The organic emission rates and quantity of organics emitted during the campaign are determined using these calculations and are included in the operating record for each campaign, as required by 40 CFR 264.1035. The Hanford Facility has a system to ensure organic emissions from units subject to 40 CFR 264, Subpart AA are less than the limits of 1.4 kilograms (3 pounds) per hour and 2.8 -megagrams (3.1 tons) per year. Records documenting total organic emissions are available for Ecology review on request.

4.2.2.3 Reevaluating Compliance with Subpart AA Standards

Calculations to determine compliance with Subpart AA will be reviewed when any of the following conditions occur at the 242-A Evaporator:

- Changes in the configuration or operation that affect the assumptions in the Organic Emission Calculations for the 242-A Evaporator Vessel Vent System (WHC 1996).
- Annual operating time exceeds 182 days.

4.3 Engineering Drawings

The drawings in Table 4.1 are ~~p~~Process and ~~i~~Instrumentation ~~d~~Diagrams (P&IDs) for the systems at the 242-A Evaporator that contact mixed waste. These drawings are provided for general information, and demonstrate adequacy of the tank systems design.

Table 4.1. Process and Instrumentation Diagrams

System	Drawing Number	Drawing Title
Vapor-Liquid Separator (C-A-1)	H-2-98988 Sheet 1	P~~-~~&~~-~~ID Evaporator Recirc System
Reboiler (E-A-1)/Recirculation Line	H-2-98988 Sheet 2	P~~-~~&~~-~~ID Evaporator Recirc System
Slurry System	H-2-98989 Sheet 1	P~~-~~&~~-~~ID Slurry System
Condensate Collection Tank(TK-C-100)	H-2-98990 Sheet 1	P~~-~~&~~-~~ID Process Condensate System
Secondary Containment Drain System	H-2-98995 Sheet 1	P~~-~~&~~-~~ID Drain System
Secondary Containment Drain System	H-2-98995 Sheet 2	P~~-~~&~~-~~ID Drain System
Condensers	H-2-98999 Sheet 1	P~~-~~&~~-~~ID Vacuum Condenser System
Pump Room Sump	H-2-99002 Sheet 1	P~~-~~&~~-~~ID Jet Gang Valve System
Condensate Recycle System	H-2-99003 Sheet 1	P~~-~~&~~-~~ID Filtered Raw Water System
Process Condensate Line PC-5000	H-2-79604	Piping Plot & Key Plans 242-A Evap Cond Stream~~for PC-5000 between 242-A and the LERF fence line~~

The drawings in Table 4.2 are for secondary containment systems for the 242-A Evaporator. Because secondary containment systems are the final barrier for preventing the release of dangerous waste into the environment, modifications that affect the secondary containment systems will be submitted to the Washington State Department of Ecology, as a Class 1, 2, or 3 Permit modifications, as required by WAC 173-303-830.

Table 4.2. 242-A Evaporator Secondary Containment Systems Drawings

System	Drawing Number	Drawing Title
242-A Building	H-2-69277 Sheet 1	Structural Foundation Plan Sections & General Notes - Areas 1 & 2
	H-2-69278 Sheet 1	Structural Foundation Elevations & Details - Areas 1 & 2
	H-2-69279 Sheet 1	Structural First Floor Plan & AMU - Areas 1 & 2
Pump Room Sump Drainage	H-2-69352 Sheet 1	Sections Process Waste Drainage
242-A Building Drainage	H-2-69354 Sheet 1	Plan Process Waste Drainage
Pump Room Sump	H-2-69369 Sheet 1	Pump Room Sump Assembly & Details

Figure 4.1. 242-A Evaporator Simplified Process Flow Diagram

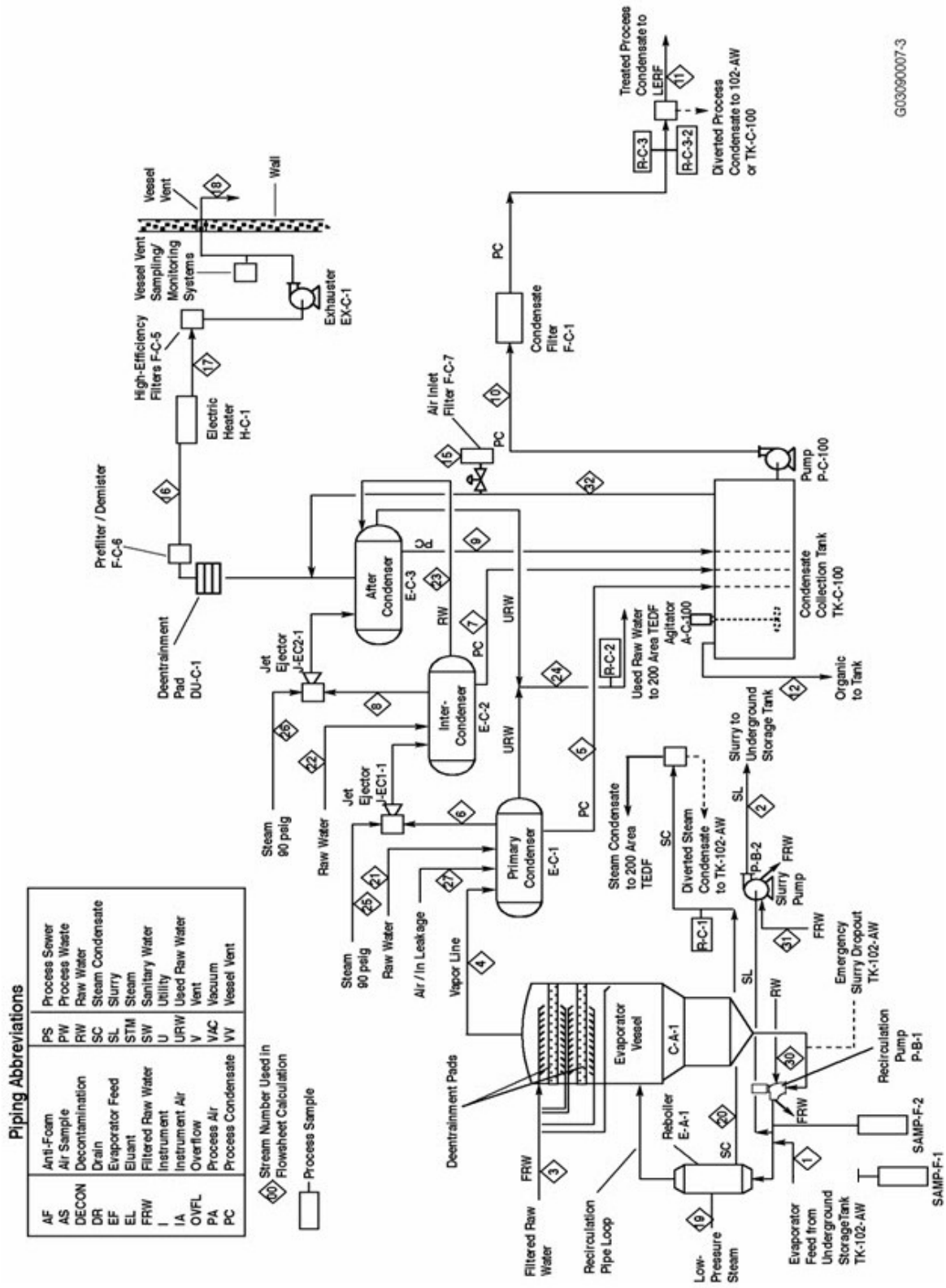

Figure 4.2. 242-A Evaporator Process Loop

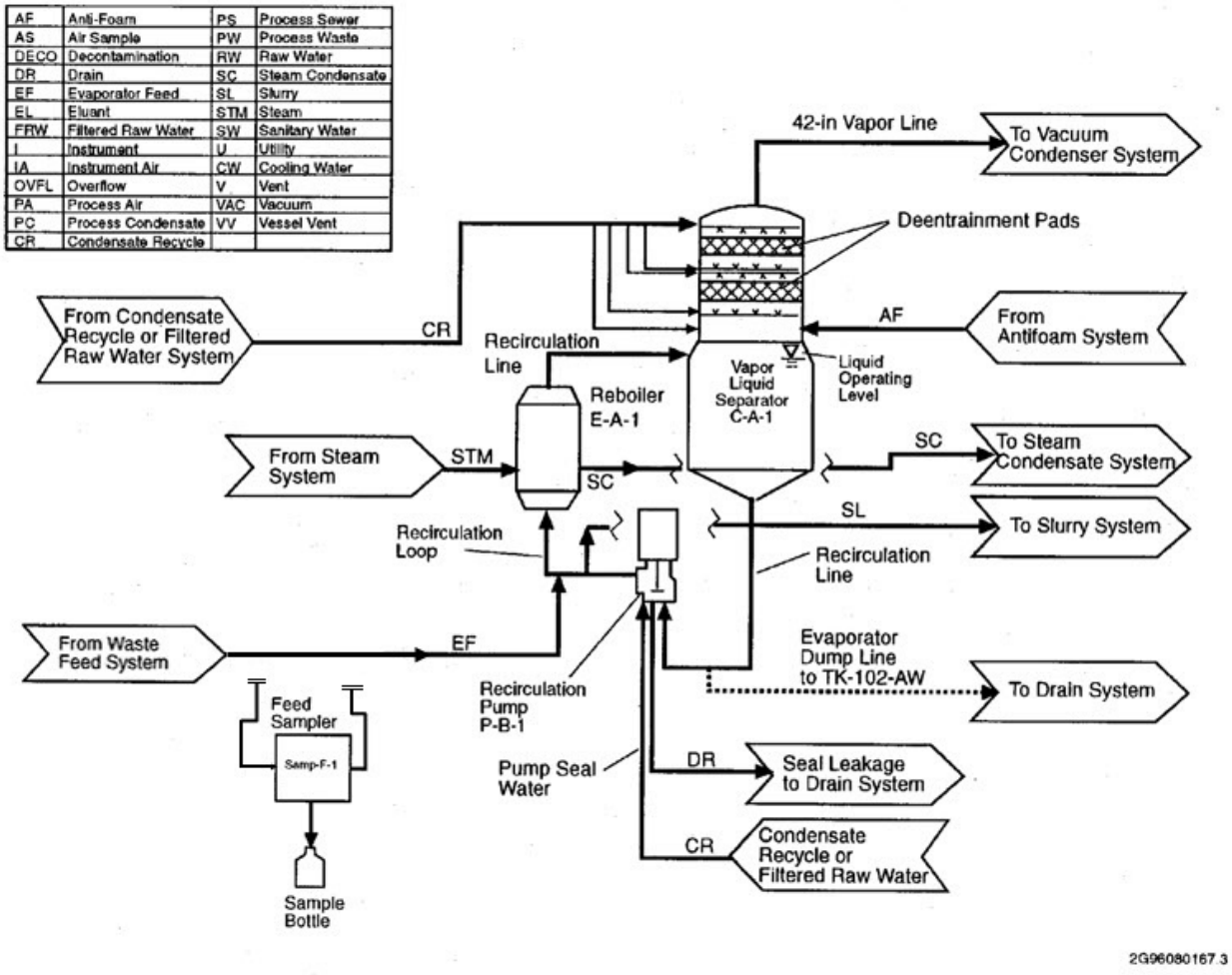

Figure 4.3. 242-A Evaporator Slurry System

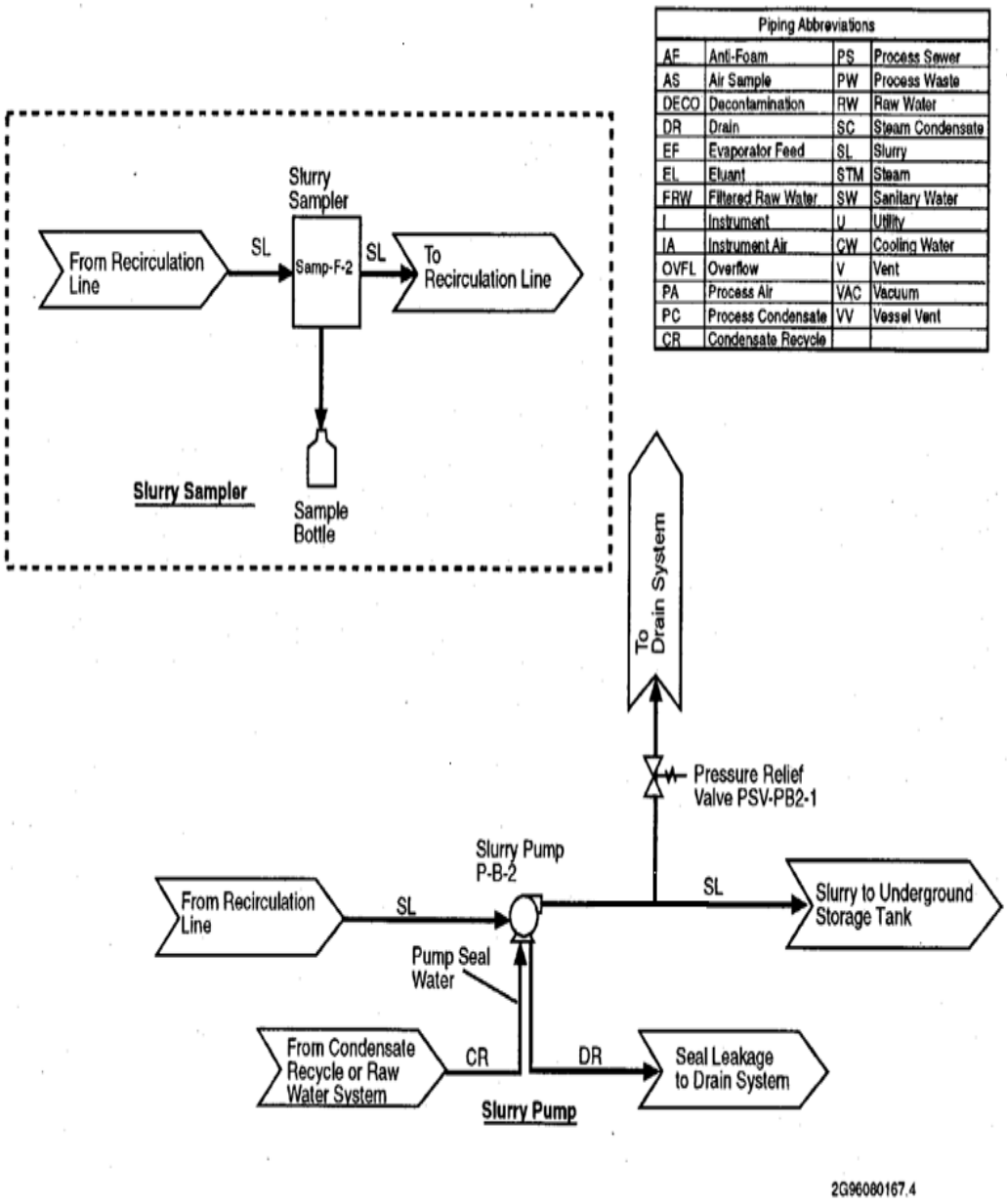

Figure 4.4. 242-A Evaporator Process Condensate System

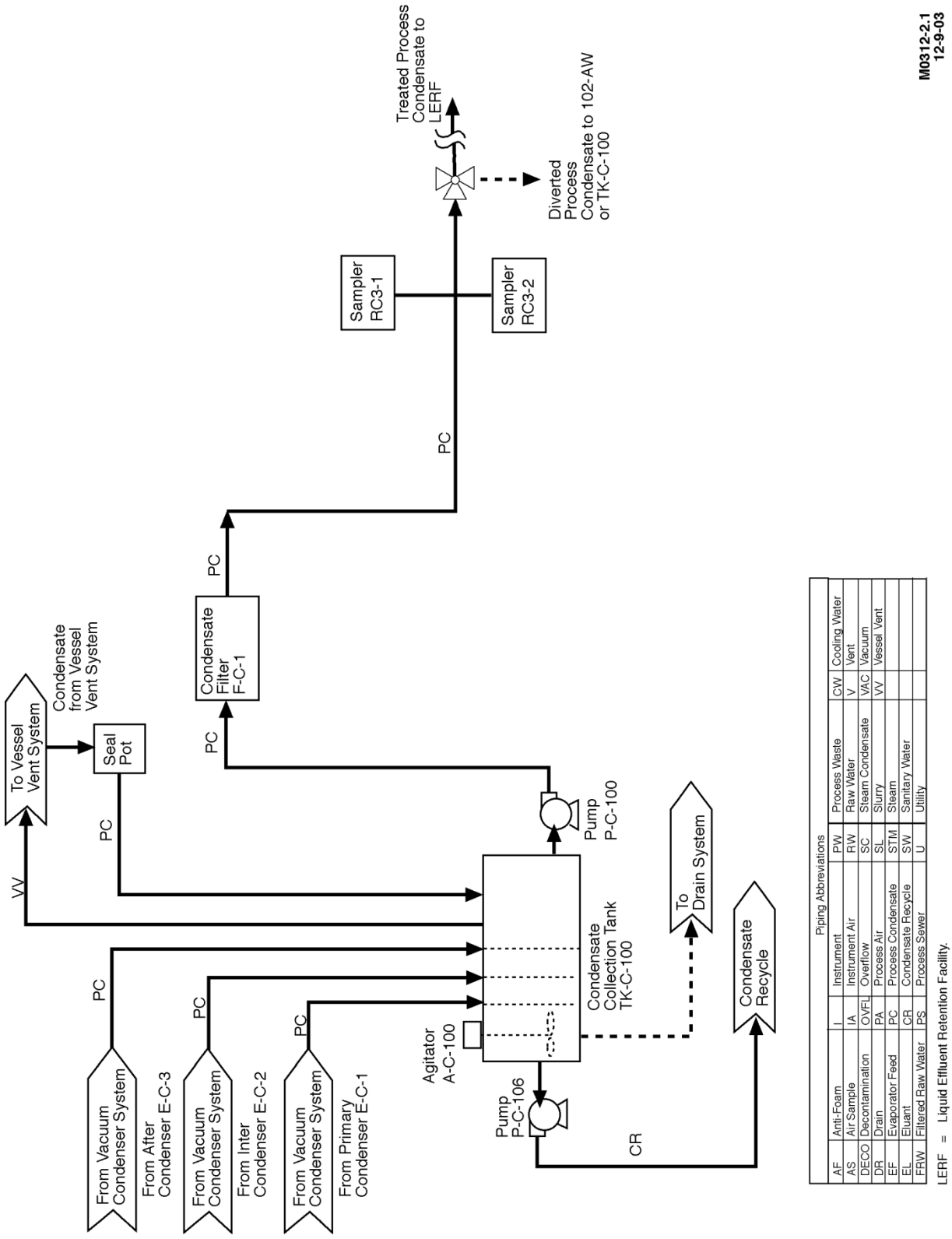

Figure 4.5. 242-A Evaporator Vacuum Condenser System

Piping Abbreviations			
AF	Anti-Foam	PS	Process Sewer
AS	Air Sample	PW	Process Waste
DECO	Decontamination	RW	Raw Water
DR	Drain	SC	Steam Condensate
EF	Evaporator Feed	SL	Slurry
EL	Eluant	STM	Steam
FRW	Filtered Raw Water	SW	Sanitary Water
I	Instrument	U	Utility
IA	Instrument Air	CW	Cooling Water
OVFL	Overflow	V	Vent
PA	Process Air	VAC	Vacuum
PC	Process Condensate	VV	Vessel Vent
CR	Condensate Recycle		

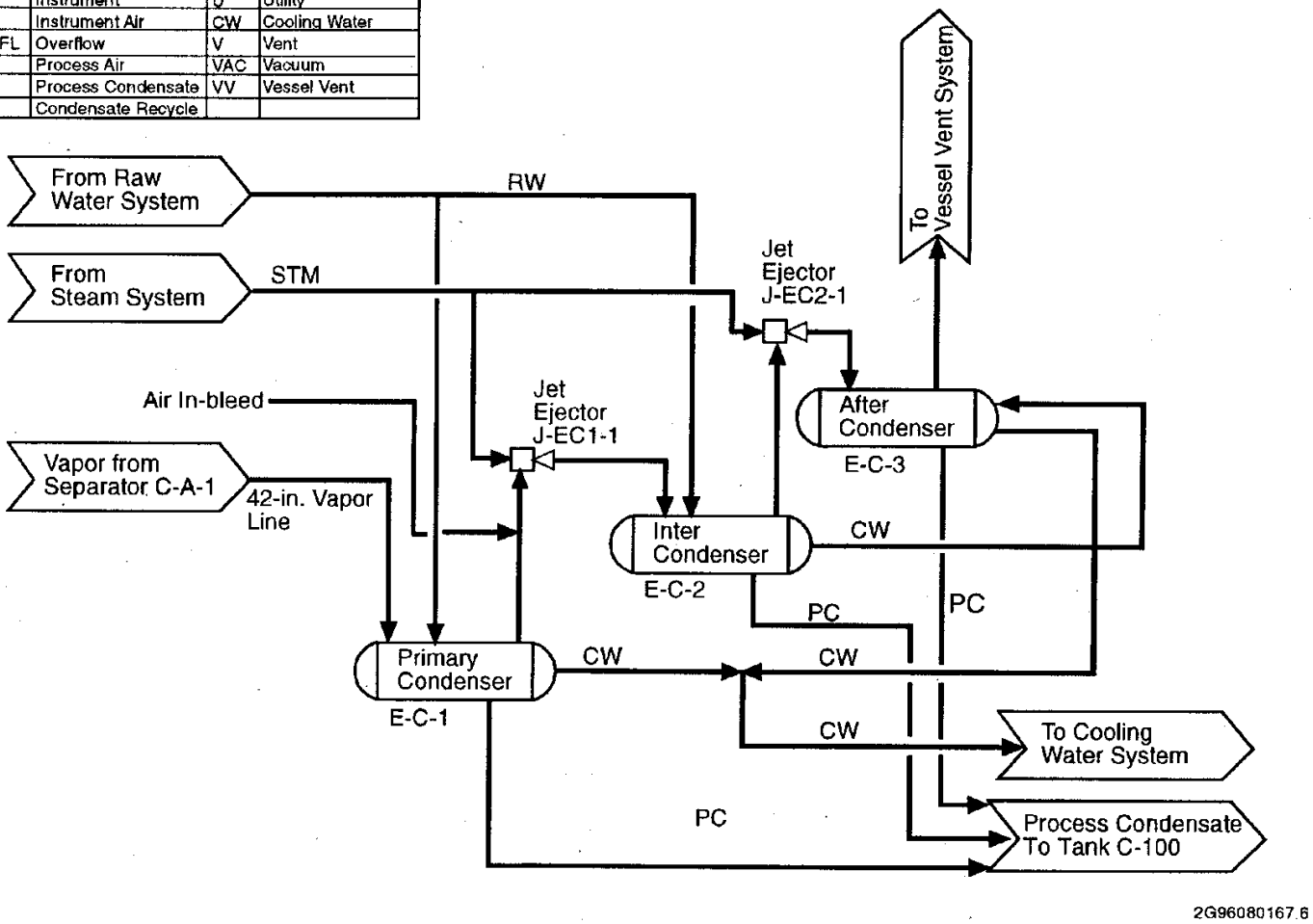

Figure 4.6. 242-A Evaporator Drain System

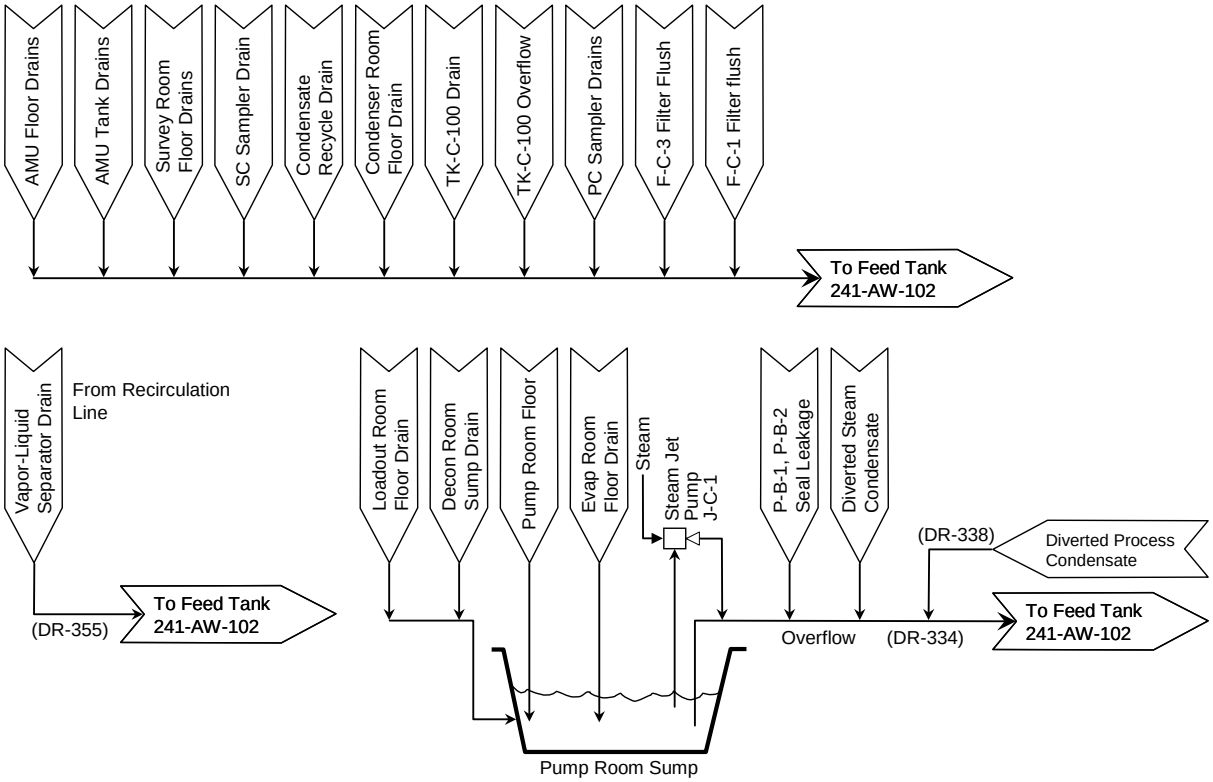

CHG0508-15

Hanford Facility RCRA Permit Modification Forms

Part III, Operating Unit Group 4

242-A Evaporator

Index

Page	Permit Section
Page 2 of 5:	Hanford Facility RCRA Permit III.4, Permit Conditions
Page 3 of 5:	Chapter 6.0, Procedures to Prevent Hazards
Page 4 of 5:	Chapter 7.0, Contingency Plan (1 of 2)
Page 5 of 5:	Chapter 7.0, Contingency Plan (2 of 2)

Submitted by WRPS Co-Operator:

4/5/15

D. Kent Smith Date

Reviewed by DOE-ORP Program Office:

11/12/15

Thomas W. Fletcher Date

Hanford Facility RCRA Permit Modification Form

Unit:	Permit Part
242-A Evaporator	**Part III, Operating Unit Group 4**

Description of Modification:

Part III, Operating Unit Group 4 Permit Conditions

The dates for the modified chapters specific to Operating Unit Group 4 are as follows:

Chapter 6.0 Procedures to Prevent Hazards, dated September 30, 2015~~December 31, 2014~~

Chapter 7.0 Contingency Plan, dated September 30, 2015~~December 31, 2014~~

WAC 173-303-830 Modification Class	Class 1	Class 1	Class 2	Class 3
Please mark the Modification Class:	X			

Enter relevant WAC 173-303-830, Appendix I Modification citation number: A.1

Enter wording of WAC 173-303-830, Appendix I Modification citation: Administrative and informational changes.

Modification Approved: [X] Yes [ ] No (state reason for denial)

Reason for denial:

Reviewed by Ecology:

S. L. Dahl-Crumpler 12-18-15 Date

Hanford Facility RCRA Permit Modification Form

Unit:	Permit Part
242-A Evaporator	**Part III, Operating Unit Group 4**

Description of Modification:

Chapter 6.0, Procedures to Prevent Hazards

- Editorial English and/or metric unit of measure: Sections 6.1, and 6.2.4.
- Editorial added hard hyphens/spaces, added/deleted extra spaces/returns: Sections 6.1, 6.2.2.3, 6.2.2.4, 6.2.4, 6.3.2.2, 6.4.1, and Table 6.4.
- Editorial include chapter title with chapter number, and capitalize chapter names: Sections 6.2.2.3, 6.2.2.6, 6.2.4, 6.2.2.6, 6.2.6, 6.3.2, 6.3.2.2, 6.4.2, and 6.5.1.
- Editorial spelled out acronyms on first use (includes editing of unit names): Sections 6.2.1, and 6.2.2.2.
- Editorial spelling: Section 6.3.2.3.
- Editorial naming of component: Sections 6.2.2, 6.2.2.1, 6.2.2.4, 6.2.2.5, 6.2.6, 6.4.2, 6.4.4, 6.5.1, Table 6.1, Table 6.3, and Table 6.4.
- Section 6.2.1.2, General Inspection Requirements: Deleted duplicate information on inspection frequencies because inspections and frequencies are listed in Tables 6.1 through 6.4. Editorial added period after last paragraph.
- Section 6.3.2.2, Emergency Equipment: Deleted paragraph-identifying location of PPE because the text already states locations of emergency equipment is provided in Chapter 7.0, Contingency Plan.
- Table 6.1, Visual Inspection Schedule for Tanks, Piping, and Rooms: Editorial in Footnote 1, deleted 'Continuously' because frequency is not used in Table 6.1, and clarified text for Daily frequency to once each calendar day.
- Table 6.2, Inspection Schedule of Safety, Security, and Emergency Equipment: Clarified frequencies for Daily, Weekly, Monthly, and Quarterly in Footnote 1, and deleted 'Continuously' and 'Annually' since the frequencies are not used in Table 6.2.
- Table 6.4, Inspection Schedule for Maintenance and Other Inspections: Clarified frequencies for Monthly, Annually, and Biennial in Footnote 1; and deleted 'Continuously' since the frequency is not used in the table.

WAC 173-303-830 Modification Class	Class 1	Class 1	Class 2	Class 3
Please mark the Modification Class:	X			

Enter relevant WAC 173-303-830, Appendix I Modification citation number: A.1
Enter wording of WAC 173-303-830, Appendix I Modification citation: Administrative and informational changes.

Modification Approved: [X] Yes [ ] No (state reason for denial)
Reason for denial:

Reviewed by Ecology:

S. L. Dahl-Crumpler — Date: 12-18-15

Hanford Facility RCRA Permit Modification Form

Unit:	Permit Part
242-A Evaporator	**Part III, Operating Unit Group 4**

Description of Modification:

Chapter 7.0, Contingency Plan (1 of 2)

- Editorial naming of component: Section 7.3.2.2, 7.3.2.5.1, 7.3.3, and 7.4.2.
- Editorial added/deleted hard hyphens/spaces, commas: Sections 7.3.2, 7.3.2.1, and 7.4.3.
- Editorial spelled out acronyms on first use (includes editing of unit names): Table 7.1, Sections 7.2, 7.3, 7.3.4, and 7.4.1.
- Editorial capitalization: Section 7.3.3
- Format changed bullets to alpha numbering: Section 7.3.4
- Grammatical use of and/or: Section 7.3.2.4
- Table 7.1: Moved table title into table, selected table row repeat, and bolded last column of table header.
- Section 7.1, Building Evacuation Routing (Building Layout): Clarified text based on event type.
- Section 7.2, Building Emergency Director: Clarified text regarding Central Shift Office location, and inserted the title of Section 7.7.
- Section 7.3.1, Protective Actions Responses: Editorial deleted section numbers, and "following".
- Section 7.3.2.5.1, Damaged or Unacceptable Shipments: Clarified that the 242-A Evaporator does not receive dangerous or mixed waste shipments that require manifesting.
- Section 7.3.6, Post Emergency Equipment Maintenance and Decontamination: Deleted duplicate text regarding self-contained breathing apparatus because this information is already stated in the previous paragraph.
- Section 7.5, Required Reports: Clarified Section 7.5 is "of this plan".
- Section 7.6, Plan Location and Amendments: Clarified one copy is maintained at the identified locations.
- Figure 7.1, 242 A Evaporator Evacuation Routes: Updated figure to include additional evacuation paths.

WAC 173-303-830 Modification Class	Class 1	Class 1	Class 2	Class 3
Please mark the Modification Class:	X			

Enter relevant WAC 173-303-830, Appendix I Modification citation number: A.1
Enter wording of WAC 173-303-830, Appendix I Modification citation: Administrative and informational changes.

Modification Approved: ☒ Yes ☐ No (state reason for denial)
Reason for denial:

Reviewed by Ecology:
S. L. Dahl-Crumpler 12-18-15
Date

Hanford Facility RCRA Permit Modification Form

Unit:	Permit Part
242-A Evaporator	**Part III, Operating Unit Group 4**

Description of Modification:

Chapter 7.0, Contingency Plan (2 of 2)

- Section 7.4.4, Personal Protective Equipment: Updated respirator location from 242-A respirator storage room to 242-A control room, and added "supplied" air for respirator type.

WAC 173-303-830 Modification Class	Class 1	Class 1	Class 2	Class 3
Please mark the Modification Class:	X			

Enter relevant WAC 173-303-830, Appendix I Modification citation number: B.6.b

Enter wording of WAC 173-303-830, Appendix I Modification citation: Replacement with functionally equivalent equipment, upgrade, or relocate emergency equipment listed.

Modification Approved: [X] Yes [ ] No (state reason for denial)

Reason for denial:

Reviewed by Ecology:

S. L. Dahl-Crumpler 12-18-15

Date

Remove and Replace the Following Pages:

Replace:

- Part III, Operating Unit Group 4, Permit Conditions
- Chapter 6.0, Procedures to Prevent Hazards
- Chapter 7.0, Contingency Plan

OPERATING UNIT 4 UNIT-SPECIFIC CONDITIONS
242-A EVAPORATOR

UNIT DESCRIPTION

The 242-A Evaporator is a mixed waste treatment and storage unit consisting of a conventional forced-circulation, vacuum evaporation system to concentrate mixed-waste solutions located in the 200 East Area.

This document sets forth the operating conditions for the 242-A Evaporator.

III.4.A COMPLIANCE WITH UNIT SPECIFIC PERMIT CONDITIONS

The Permittees shall comply with all requirements set forth in the Hanford Facility RCRA Permit (Permit) as specified in Permit Attachment 9, Permit Applicability Matrix, including all approved modifications. All chapters, subsections, figures, tables, and appendices included in the following unit-specific Permit Conditions are enforceable in their entirety.

In the event that the Part III-Unit-Specific Conditions for Operating Unit 4, 242-A Evaporator conflict with the Part I-Standard Conditions and/or Part II-General Facility Conditions of the Permit, the unit-specific conditions for Operating Unit 4, 242-A Evaporator prevail.

CHAPTERS SPECIFIC TO OPERATING UNIT GROUP 4:

Chapter 1.0 Part A Form, dated March 31, 2014

Chapter 3.0 Waste Analysis Plan, dated March 31, 2014

Chapter 4.0 Process Information, dated ~~September 30, 2013~~December 31, 2015

~~Appendix 4B Tank Integrity Assessment, dated December 31, 2002~~

Chapter 5.0 Groundwater Monitoring, dated (not applicable)

Chapter 6.0 Procedures to Prevent Hazards, dated December 31, 2015~~2014~~

Chapter 7.0 Contingency Plan, dated December 31, 2015~~2014~~

Chapter 8.0 Personnel Training, dated September 30, 2013

Chapter 11.0 Closure, dated September 30, 2013

III.4.B COMPLIANCE WITH UNIT-SPECIFIC PERMIT CONDITIONS

III.4.B.1 Portions of permit attachment 4 (DOE/RL-94-02) that are not made enforceable by inclusion in the applicability matrix for that document are not made enforceable by reference in this document.

CHAPTER 6.0
PROCEDURES TO PREVENT HAZARDS

CONTENTS

6.0 PROCEDURES TO PREVENT HAZARDS 6.1

6.1 Security 6.1
6.1.1 Waiver 6.1

6.2 Inspection Plan 6.1
6.2.1 General Inspection Requirements 6.1
6.2.2 Tank System Inspections and Corrective Actions 6.2
6.2.3 Storage of Reactive and Ignitable Wastes 6.4
6.2.4 Air Emissions Control and Detection Inspections 6.4
6.2.5 Inspection Logs 6.4
6.2.6 Schedule for Remedial Action for Problems Revealed ..... 6.5~~6.4~~

6.3 Preparedness and Prevention Requirements 6.5
6.3.1 Equipment Requirements 6.5
6.3.2 Internal Communications 6.5
6.3.3 Spacing Requirement 6.6

6.4 Preventive Procedures, Structures, and Equipment 6.6
6.4.1 Loading and Unloading Operations 6.6
6.4.2 Runoff 6.6
6.4.3 Water Supplies ..... 6.7~~6.6~~
6.4.4 Equipment and Power Failures 6.7
6.4.5 Personnel Exposure 6.7

6.5 Prevention of Reaction of Ignitable, Reactive, and Incompatible Waste ..... 6.8~~6.7~~
6.5.1 Precautions to Prevent Ignition or Reaction of Ignitable or Reactive Waste ..... 6.8~~6.7~~
6.5.2 Precautions for Handling Ignitable or Reactive Waste and Mixing of Incompatible Waste 6.8

TABLES

Table 6.1. Visual Inspection Schedule for Tanks, Piping, and Rooms 6.9
Table 6.2. Inspection Schedule of Safety, Security, and Emergency Equipment 6.10
Table 6.3. Inspection Schedule for Alarm Monitoring 6.11
Table 6.4. Inspection Schedule for Maintenance and Other Inspections 6.12

This page intentionally left blank.

6.0 PROCEDURES TO PREVENT HAZARDS

This chapter discusses security, inspection schedules, preparedness and prevention requirements, preventive procedures, structures, and equipment, and prevention of reaction of ignitable, reactive, and incompatible waste for the 242-A Evaporator.

6.1 Security

Refer to Permit Attachment 3, Security for compliance with WAC 173-303-310(2)(b) and (c). The 242-A Evaporator is located within the 200 Area of the Hanford Facility and access is controlled by physical barriers, which complies with WAC 173-303-310(2)(c). To meet the requirements of WAC 173-303-310(2)(a), signs stating *Danger-Unauthorized Personnel Keep Out*, or equivalent language, legible at 7.6 meters (25 feet) or more, are posted at each entrance to the active portion or each entrance that will lead to the active portion. The Permittees will post signs on or near the outside doors to the 242-A Evaporator.

6.1.1 Waiver

A waiver of security procedures and equipment requirements is not requested for the 242-A Evaporator. Therefore, the waiver requirements outlined in WAC 173-303-310(1)(a) and (b) are not applicable.

6.2 Inspection Plan

This section describes the method and schedule for inspections of the 242-A Evaporator. The purpose of inspections is to identify situations that might cause or lead to a release of mixed waste that could pose a threat to human health and the environment. Abnormal conditions identified by an inspection must be corrected on a schedule that prevents hazards to the public and environment.

6.2.1 General Inspection Requirements

This section provides an overview of inspections performed at the 242-A Evaporator. A copy of the inspection plan is kept in the Hanford Facility Operating Record, 242-A Evaporator unit-specific portion. There are three general classes of inspections at the 242-A Evaporator:

- Monitoring of remote instrumentations and alarms are performed by operating personnel in the 242-A Evaporator control room using the monitor control system (MCS) computer.
- Visual inspections of tanks and equipment are performed by operating personnel. Other inspections of 242-A Evaporator equipment are performed as noted in Table 6.1 through Table 6.4.
- Preventive maintenance of equipment and calibration of instruments are performed by maintenance personnel. A computerized tracking system is used to identify and schedule preventive maintenance and calibration activities.

Preventive maintenance and instrument calibrations on certain equipment might not be possible when the 242-A Evaporator is operating. Because of the limited duration of 242-A Evaporator campaigns, these activities are scheduled during outages between campaigns to avoid interference with operating activities. Per Condition II.O.3 inspection of high radiation areas will be addressed on a case-by-case basis.

6.2.1.1 Types of Problems

The 242-A Evaporator inspections include, but are not limited to, the following:

- Condition of tanks and ancillary equipment
- Condition of secondary containment
- Evidence of leaks or overflows from tanks, piping, or transfer lines
- Condition of security equipment
- Condition of safety, communications, and emergency equipment.

A schedule of inspections, including items to be inspected, problems to look for, frequency of inspections and responsible organization are provided in Tables 6.1 through 6.4.

6.2.1.2 Frequency of Inspections

The frequency of inspections is based on the significance of a failure of the equipment and on regulatory requirements, Hanford Site and industry standards, and experience of the nature and frequency of equipment failures.

- The frequency of inspections for the 242-A Evaporator is given in Tables 6.1 through 6.4. ~~Examples of frequencies include:~~
- ~~Daily (at least every 24 hours) - visual inspections of tanks, piping and secondary containment.~~
- ~~Weekly (at least every 7 days) - visual inspections of personal protective equipment, exterior lighting, and posted warning signs.~~
- ~~Monthly (at least every 31 days) - inspections of emergency sirens, fire extinguishers, safety showers, emergency lighting and the spill control kit.~~
- ~~Annually (at least every 365 days) - instrumentation calibrations, cathodic protection system testing, fire inspections.~~

Leak detectors are functionally checked within 92 days of the start of a campaign and every 92 days thereafter until the campaign is over. The frequency of some alarm monitoring is continuous. This means an operator must be present in the control room to monitor alarm instruments that continuously check for conditions such as leaks and high sump levels. Continuous monitoring is only required when the 242-A Evaporator is processing waste

6.2.2 Tank System Inspections and Corrective Actions

This section discusses the inspections performed on the two tank systems at the 242-A Evaporator: the vapor liquid separator (C-A-1), and the condensate collection tank (TK-C-100). Inspections include secondary containment and leak and overfill prevention equipment.

6.2.2.1 Overfill Prevention

The vapor liquid separator (C-A-1), is equipped with instrumentation that alarms before the tank reaches a level where the tank could overflow or entrain liquid waste into the vacuum condenser system. The alarm annunciates in the control room allowing operating personnel to take immediate action to stop the vapor liquid separator (C-A-1) from overfilling.

The condensate collection tank (TK-C-100), was designed with an overflow line that routes waste to the DST System feed tank~~,~~ 241-AW-102. This design prevents tank overflow to the condenser room.

6.2.2.2 Visual Inspections

Visual inspections of tanks and secondary containments are performed to check for leaks, signs of corrosion or damage, and malfunctioning equipment. The following rooms containing dangerous waste are inspected:

- Condenser room
- Pump room
- Loadout and hot equipment storage room

In addition, the aqueous makeup unit (AMU) and Loading Room are inspected when dangerous waste is present in the room.

The vapor liquid separator (C-A-I) is located in the evaporator room, with a portion of the recirculation loop located in the pump room. Because of the high radiation dose in the evaporator room, visual inspections cannot be performed. Leaks in the evaporator room drain to the pump room sump; monitoring of the pump room sump instrumentation is performed to determine if leaks have occurred.

Visual inspection of the pump room and the loadout and hot equipment storage room is performed through the shielding windows in the AMU to constrain personnel radiological exposure to levels that are as low as reasonably achievable (ALARA).

6.2.2.3 Leak Detectors

The sample enclosures in the load out and hot equipment storage room have leak detectors for both the feed and slurry samplers. For information on these systems and their secondary containment, refer to Chapter 4.0, Process Information.

During sampling or maintenance activities associated with the evaporator room, pump room, or loadout and hot equipment storage room, a radiological contamination control curtain may be extended over the load out room to reduce the likelihood of contaminants reaching the environment through the load out door. When extended, the contamination control curtain will limit visibility to the load out and hot equipment storage room from the shielding window on the AMU mezzanine while completing inspections. When this is the case, inspection forms will denote that the containment curtain was extended. Leaks in the evaporator room, pump room, and the loadout and hot equipment storage room drain to the pump room sump. The sump high-level alarm serves as a leak detector for these rooms. For information on the rooms and their drain systems, refer to Chapter 4.0, Process Information.

The PC-5000 transfer line may be continuously monitored during transfers by an electronic leak detection system (Chapter 4.0, Process Information) or visually inspected at the encasement catch tank (TK-PC-101) in the LERF catch basin (242AL-43). The leak detection system alarms are monitored in the 242-A Evaporator Control Room on the Monitoring and Control System (Chapter 4.0, Process Information). When necessary, visual inspections of the PC-5000 transfer line encasement are administratively controlled by the 242-A Evaporator Shift Manager and occur at a minimum once every 24 hours during waste water transfers through the PC-5000 transfer line to ensure compliance with WAC 173-303-640(4)(c)(iii). Visual inspection for leaks from the PC-5000 transfer line are performed by 242-A Evaporator Operations, by looking for signs of any liquid not attributed to rain/precipitation at the encasement catch tank (TK-PC-101). If any liquid is observed the 242-A Evaporator Shift Manager is notified to take corrective actions.

6.2.2.4 Alternative Leak Detection during Electrical/Ventilation Outages

As part of maintenance or system upgrades, the need to secure electrical power or ventilation to the 242-A Evaporator sometimes becomes necessary. This includes activities such as, but not limited to: cleaning and inspection of the motor control centers (MCCs) for distributing electrical power to the systems at the 242-A Evaporator, ventilation system maintenance and upgrades. Planned electrical or ventilation outages are performed during periods when Double Shell Tank System waste is not being processed.

During times when access is limited as a result of electrical or ventilation outages, performance of daily inspections specified in Table 6.1 may be impacted. When impacted, an alternative method of leak detection is implemented for the condenser room, and the inspections are suspended in the pump room, loadout and hot equipment storage room, and the loading room.

When impacted in the condenser room, a camera will be placed above the floor drain to detect the presence of leaks or spills. The process condensate collection tank (TK-C-100), located in the condenser room, is the only tank storing dangerous waste on a routine basis. It is not normal to allow personnel access into the condenser room during extended electrical or ventilation outages unless maintenance activities or upgrades require entry. If required, the camera and subsequent television monitor will be provided electrical power via an alternative source. Operators will complete their daily observations for leaks or spills using this method for the condenser room. Facility personnel will document the use of this alternative method in the Hanford Facility Operating Record, 242-A Evaporator unit specific portion.

For the pump room, loadout and hot equipment storage room, and the loading room, these rooms do not have the capability for a camera so that inspections are suspended during maintenance activities affecting

the electrical power supply to the overhead lighting. Performance of Table 6.1 daily inspections is not possible. Storage of mixed waste does not occur in these rooms because systems which manage mixed waste within the pump room and the loadout and hot equipment storage room are flushed and gravity drained to the extent possible after each campaign. Should any remaining liquid leak from primary containment; it is captured by the secondary containment system and routed to the pump room sump and ultimately to the 241-AW-102 DST System feed tank. Quantities of liquid sufficient to reach 241-~~-~~AW-~~-~~102 would cause a change in tank level. Facility personnel will document when inspections cannot be performed due to electrical outages in the Hanford Facility Operating Record, 242-~~-~~A- Evaporator unit specific portion.

The process described in the preceding paragraphs of this section may also be implemented when external events cause electrical or ventilation outages.

6.2.2.5 Cathodic Protection

Cathodic protection is not required for the equipment within the 242-A facility boundaries. The only portion of the system, which is underground, is the PC-5000 transfer line. The PC-5000 transfer line is constructed of fiberglass.

6.2.2.6 Tank Assessments

The IARs were issued in 1998 and 2008. The frequency and nature of these assessments are discussed in Chapter 4.0, Process Information.

6.2.3 Storage of Reactive and Ignitable Wastes

A Fire Protection Engineer (FPE) performs the annual ignitable and reactive waste inspection of the 242-A Evaporator. The inspection record includes the date and time of the inspection, the name of the professional inspector, a notation of the observations made, and any remedial actions which were taken as a result of the inspection. The completed inspection record is included in the Hanford Facility Operating Record, 242-A Evaporator unit-specific portion.

6.2.4 Air Emissions Control and Detection Inspections

The process vent at the 242-A Evaporator is subject to 40 CFR 264, Subpart AA, which requires organic emissions be limited to 1.4 kilograms ~~per hour~~ (3~~.1~~ pounds) per hour~~)~~, and 2.8 mega grams ~~per year~~ (3.1 tons)~~6,173 pounds)~~ per year~~)~~, or controls be installed to reduce organic emissions by 95 percent. Organic concentrations in the waste processed at the 242-A Evaporator are limited to ensure the values of 1.4- kilograms ~~per hour~~ (3~~.1~~ pounds) per hour~~)~~ and 2.8 mega grams ~~per year~~ (3.1 tons~~6,173 pounds~~) per year~~)~~ are not exceeded. Therefore, no emission control devices are installed on the 242-A Evaporator vessel ventilation system and no inspections are required (Chapter 4.0, Process Information).

6.2.5 Inspection Logs

Visual inspections (refer to Tables 6.1-6.4) are performed using inspection log sheets (also called round sheets) that outline frequency, the components to inspect, operating conditions and ranges, and types of problems. Log sheets are kept in the 242-A Evaporator control room. Inspectors record the following information:

- Date and time of the visual inspection
- Printed name and signature of the person performing the inspection
- Notations of the observations made, including space for writing comments
- An account of spills or discharges in accordance with WAC 173-303-145.

Completed log sheets are reviewed and approved by the shift supervisor, collected, and stored for at least 5 years.

Maintenance inspections are performed as part of the maintenance job control system. After completion, the maintenance documentation is reviewed and signed.

6.2.6 Schedule for Remedial Action for Problems Revealed

If while performing a visual inspection (Table 6.1), a leak or spill is discovered, 242-A Evaporator management responds immediately per Chapter 7.0, Contingency Plan. Action is taken to stop the leak and determine the cause. The waste is removed from the secondary containment within 24 hours or in a timely manner that prevents harm to human health and the environment. The specific actions for the pump room sump are described in Chapter 4.0, Process Information.

If an alarm activates during inspections, an operator responds immediately and implements appropriate actions.

If an inspection identifies equipment that is missing, damaged, or not operating properly, the operator records the problem on a deficiency log in the 242-A Evaporator control room. Repair work is prioritized by 242-A Evaporator management to mitigate health and environmental risks.

6.3 Preparedness and Prevention Requirements

The following sections document the preparedness and prevention measures taken at the 242-A Evaporator.

6.3.1 Equipment Requirements

The following sections describe the internal and external communications and emergency equipment located at the 242-A Evaporator that can be activated by the 242-A Evaporator Building Emergency Director (BED). Hanford Facility-wide equipment is identified in Permit Attachment 4, *Hanford Emergency Management Plan* (DOE/RL-94-02).

6.3.2 Internal Communications

The 242-A Evaporator is equipped with internal communication systems to provide immediate emergency instruction to personnel. The onsite communication systems at the 242-A Evaporator include telephones, hand-held two-way radios, a public address system, and alarm systems. The telephone and radio systems provide for internal and external communication. Alarm systems allow personnel to appropriately respond to various emergencies, including building evacuations, take cover events, fires and/or explosions. The locations of telephones, public address systems, and alarms are given in the Chapter 7.0, Contingency Plan.

Immediate emergency instruction to personnel is provided by a public address system using speaker horns and speakers located throughout the 242-A and 242-AB Buildings and outside.

6.3.2.1 External Communications

The 242-A Evaporator is equipped with devices for summoning emergency assistance from the Hanford Fire Department, the Hazardous Materials Response Team, and/or Hanford Patrol, as necessary. External communication to summon emergency assistance is made by using a telephone communication system, fire alarm pull boxes, or hand-held radio as described in Permit Attachment 4, *Hanford Emergency Management Plan*, (DOE/RL-94-02). These devices are provided throughout the 242-A Evaporator.

During certain periods, only one operator may be available within the 200 East plateau. This operator has access to external communication using telephones located throughout the building.

6.3.2.2 Emergency Equipment

Emergency equipment is available throughout the 242-A Building. The locations of emergency equipment are provided in Chapter 7.0, Contingency Plan.

Major fire damage is unlikely at the 242-A Evaporator because of the concrete construction and because the amount of combustible material is minimized. Temperature activated water sprinkler systems, emergency lights, fire alarms pull boxes, and fire extinguishers are located throughout the 242-A Evaporator. The 242-A Evaporator relies primarily on the Hanford Fire Department to respond to fires and other emergencies as described in Permit Attachment 4, *Hanford Emergency Management*

Plan, (DOE/RL-94-02). The Hanford Fire Department is capable of providing rapid response to fires within the 200 East Area.

Safety showers are used to decontaminate personnel. Water for these devices is supplied from the sanitary water system.

~~Respirators are located in the PPE storage room near the entryway to the condenser room. Other PPE, such as hazardous material protective gear and special work procedure clothing, are located in cabinets in the survey area. If required, PPE is donned before entry into the rooms containing mixed waste. The level of personal protective equipment required depends on the level of contamination in the area being entered and the activity being performed.~~

Spill kits are used to provide spill control measures. An inventory of the equipment in the spill kit is included inside the cabinet. The spill kit seal is checked monthly to ensure the spill kit has not been used. If used, the spill kit will be replenished by the next monthly inspection and a new seal applied. If items are unavailable, then this will be noted on the inspection sheet and the kit will be left unsealed until inventory items are replenished.

The 242-A Evaporator operating personnel are trained in the use of emergency equipment (Chapter 8.0, Personnel Training).

6.3.2.3 Water for Fire Control

Water for fire protection is supplied from the 200 East Area raw water system. The water distribution system is sized to provide adequate volume and pressure to supply fire-fighting needs under normal and emergency conditions. A fire hydrant is located in the immediate proximity of the 242-A Building.

In the event that the sprinkler system at the 242-A Evaporator does not put out a fire, or the sprinkler system is damaged during an accident, the Hanford Fire Department fire station will provide equipment as described in Permit Attachment 4, *Hanford Emergency Management Plan (DOE/RL-94-02)*.

6.3.3 Spacing Requirement

Sufficient space is maintained on the exterior of the 242-A Evaporator to allow access of personnel and equipment responding to fires, spills, or other emergencies. Unobstructed fire lanes run from Fourth Street and Canton Avenue to the 242-A Building main entrance to allow emergency vehicle access to the main entrance and the nearby fire hydrant.

The 242-A Evaporator interior space is designed to allow access by emergency response personnel while maintaining barriers to contain releases of gaseous or liquid waste and hazardous substances as defined in WAC 173-303-040. Exit (egress) paths in the rooms containing dangerous waste are checked daily to ensure the walkways have not been obstructed.

6.4 Preventive Procedures, Structures, and Equipment

The following sections describe preventive procedures, structures, and equipment.

6.4.1 Loading and Unloading Operations

Loading and unloading operations, as described in WAC 173-303-395(4), do not take place at the 242-A Evaporator. Liquid mixed waste is transferred only by pipeline.

6.4.2 Runoff

Liquid waste handling at the 242-A Evaporator occurs within tank systems with secondary containment. Rooms containing mixed waste have drains that route to either the pump room sump or the DST System feed tank, 241-AW-102. The pump room sump overflows to the DST System feed tank as well. Therefore, run-off from a major leak, such as a break in a large water line within the 242-A Building, would be contained within the 242-A Evaporator or drained to the DST System feed tank 241-AW-102. ~~(r~~Refer to Chapter 4.0, Process Information for information on secondary containment and drain systems~~)~~.

6.4.3 Water Supplies

Raw and sanitary water are supplied to the 242-A Evaporator via separate underground lines. Raw water is filtered to prevent organisms and other debris from clogging valves, fire hydrants, and other equipment. Sanitary water is filtered and treated before distribution through a piping system separate from the raw water system.

The raw water supply to the 242-A Evaporator enters the 242-A-81 Water Service Building, passing through a strainer and backflow preventer before entering the facility. The backflow preventer ensures contaminated water cannot flow back into the raw water system. A second backflow preventer is installed in the 242-A Evaporator on the raw water supply line connecting with the condensate recycle line. This system allows either raw water or process condensate to be used for the pump seal water and deentrainment pad spray water without risk of contamination of the raw water system.

The sanitary water system provides water to the lunchroom, drinking fountains, men's and women's change rooms, safety showers, and supply ventilation system air washers. There are no connections between sanitary water and any system or piping containing mixed waste.

6.4.4 Equipment and Power Failures

Backup power is provided by a diesel generator. The diesel motor starts automatically on loss of electrical power and has sufficient fuel to operate the generator, if needed, to safely shut down the evaporator process. An uninterruptible power supply system also is provided to allow continued operation of the MCS computer to ensure uninterrupted monitoring until the backup generator is fully on line.

The 242-A Evaporator is designed to mitigate the effects of failure of a major piece of equipment. In general, the evaporator process can be shut down and the vapor liquid separator gravity drained to the DST System feed tank, 241-AW-102, in the event of equipment failure. The process condensate collection tank (TK-C-100), is designed to overflow to DST System feed tank 241-AW-102. This mitigates failure of the process condensate pump used to transfer the process condensate to LERF.

Response to loss of utilities is discussed in more detail in Chapter 7.0, Contingency Plan.

6.4.5 Personnel Exposure

Design, administrative controls, and personal protective equipment are used at the 242-A Evaporator to prevent undue exposure of personnel to mixed waste.

The following features were incorporated into the 242-A Evaporator design to minimize personnel exposure.

- The 242-A Evaporator is designed for remote operation of equipment containing highly radioactive solutions such as waste feed and slurry. These solutions usually are present only in the pump room and evaporator room, which are heavily shielded and routinely are not entered by operating personnel.
- The 242-A Building ventilation system is designed to provide air flow from uncontaminated zones to progressively more contaminated zones.
- Emergency lighting devices are located strategically throughout the 242-A Evaporator.
- Eyewash stations and safety showers are located as identified in Chapter 7.0, Contingency Plan.
- Methods for decontaminating vessels and equipment are available to reduce personnel exposure if entry for maintenance activity is required.
- Offices, control room, change rooms, and lunchroom are situated to minimize casual exposure of personnel.

All operations are conducted so employee exposure to mixed waste are maintained as low as reasonably achievable (ALARA). Exposures are minimized by engineering or administrative controls with

protective gear used where such controls are not practical. Before the start of any operation that might expose personnel to the risk of injury or contamination, a review of the operation is performed to ensure the nature of hazards that might be encountered are considered and that appropriate protective gear is selected. Administrative procedures dictate the level of protective clothing worn and depend on the location within the 242-A Evaporator and the nature of the activity being performed.

6.5 Prevention of Reaction of Ignitable, Reactive, and Incompatible Waste

The following sections describe prevention of reaction of ignitable, reactive, and incompatible waste.

6.5.1 Precautions to Prevent Ignition or Reaction of Ignitable or Reactive Waste

Administrative processes are designed to prevent the ignition or reaction of waste at the 242-A Evaporator. The precautions include the following.

- Analysis is performed on candidate waste in the DST System to check that there are no exothermic reactions when the waste is heated and that there will be no adverse effects due to mixing the contents of different waste tanks in the DST System feed tank and evaporator vessel (refer to Chapter 3.0, Waste Analysis Plan~~for details on waste analysis~~).
- Sample analysis of the candidate feed tank waste in the DST System includes a surface sample to identify the presence of a separable organic layer that might be ignitable. Refer to Chapter 3.0, Waste Analysis Plan for addressing a separable organic layer. The condensate collection tank (TK-C-100), is equipped with instrumentation to detect the presence of a separable organic phase. If a separate organic phase is detected, the tank is allowed to overflow, transferring the organic phase to the DST System feed tank~~,~~ 241-AW-102.
- The condensate collection tank (TK-C-100) is overflowed to the DST System during each campaign to prevent the possibility of accumulating immiscible organics in the condensate waste tank.
- The vapor liquid separator (C-A-1) and the condensate tank are drained and flushed before any welding is performed.

6.5.2 Precautions for Handling Ignitable or Reactive Waste and Mixing of Incompatible Waste

Waste received at the 242-A Evaporator is protected from materials or conditions that might cause the waste to ignite or react. Much of the waste handling is done remotely to reduce the risk to operating personnel. For precautions taken to prevent the ignition or reaction of waste, refer to Section 6.5.1.

The constituents in the waste received at the 242-A Evaporator that are ignitable or reactive are not very volatile. Therefore, the evaporation process renders the waste that is evaporated (i.e., the process condensate) neither ignitable nor reactive.

Table 6.1. Visual Inspection Schedule for Tanks, Piping, and Rooms

Item	Inspection	Frequency[1]
Tank and Piping Inspection		
Condensate collection (TK-C-100) tank and piping	• Inspect piping for leaks or corrosion	Daily
Room Inspections		
AMU Mezzanine	• Inspect piping for leaks or corrosion • Inspect floor for spills or damage • Inspect for equipment malfunctions • Inspect for housekeeping	Daily[2]
Pump room	• Inspect piping for leaks or corrosion • Inspect floor for spills or damage • Inspect for equipment malfunctions • Inspect for housekeeping • Monitor pump room sump for overflow	Daily[3]
Loadout and hot equipment storage room	• Inspect piping for leaks or corrosion • Monitor pump room sump and inspect floor for spills or damage • Inspect for housekeeping	Daily[3]
Loading room	• Inspect for housekeeping • Monitor drains	Daily[2,3,4]
Condenser room	• Inspect tanks and piping for leaks or corrosion • Inspect floors for spills or damage • Inspect for equipment malfunctions • Inspect for housekeeping	Daily
IX column [5] room	• Inspect piping for leaks or corrosion • Inspect floor for spills or damage	Daily[6]

[1] ~~Continuously: an operator must be present in the control room to respond to alarms when processing waste~~
Daily: Once each calendar day~~at least every 24 hours~~
2 When dangerous waste is present
3 Use viewing window in AMU Mezzanine to perform inspections except for the pump room which uses the ground floor window
[4] Denote use of contamination control curtain when extended
[5] IX column was removed in 2003. The remaining piping has been drained and isolated.
[6] Surveillance is only required if the piping is returned to service and dangerous waste is reintroduced to the piping

Table 6.2. Inspection Schedule of Safety, Security, and Emergency Equipment

Item	Inspection	Frequency[1]
Security		
Building external doors	Verify external doors are closed and locked[2]	Daily
Posted warning signs	Verify signs are present, legible, and visible at 7.6 meters (25 feet ~~(7.6 meters~~)	Weekly
Communications		
Radios	Verify radios are operable and batteries are charged	Monthly
Telephones	Verify telephones are operable	Quarterly
Intercom/public address system	Verify systems are working properly	Quarterly
Emergency Equipment		
Safety showers/ eyewash station	Verify operability	Monthly
Emergency lighting	Verify operability	Monthly
Fire extinguishers	Verify fire extinguishers are in their proper location	Monthly
Spill kit	Verify the spill kit is present and that the seal is intact.	Monthly
Personal protective clothing	Verify availability	Weekly
Respirators	Verify availability and shelf life	Monthly

[1] ~~Continuously: an operator must be present in the control room to respond to alarms~~
Daily: Once each calendar day~~at least every 24 hours~~
Weekly: Once each calendar week~~at least every 7 days~~
Monthly: Once each calendar month~~at least every 31 days~~
Quarterly: Once each quarter, not to exceed ~~at least every~~ 124 days
~~Annually: at least every 365 days~~

[2] Entrances to office areas are allowed to be unlocked

Table 6.3. Inspection Schedule for Alarm Monitoring

Item	Inspection	Frequency[1]
Overfill Protection		
Vapor liquid separator (C-A-1): WFSH-CA11 WFSH-CA12	Monitor for vapor liquid separator high level. Surveillance required only when solution is in the vapor liquid separator.	Continuously
Leak Detection		
Sampler lines: LDS-SMPL1 LDS-SMPL2	Monitor feed and slurry sampler lines for leaks. Surveillance required only during feed or slurry sampling.	Continuously
Pump room sump: WFI-SUMP1	Monitor for leaks in the evaporator room, pump room, load out and hot equipment storage room and loading room. These rooms drain to the pump room sump. Surveillance required only when waste solution is present in the rooms listed.	Continuously

[1] Continuously: an operator must be present in the control room to respond to alarms.

Table 6.4. Inspection Schedule for Maintenance and Other Inspections

Item	Inspection	Frequency[1]
Instrumentation Functional Checks and Calibrations		
Leak detectors	Perform leak detector functional checks.	Within 92 days of campaign startup and every 92 days thereafter until the campaign is over
Vapor liquid separator (C-A-1) high level alarms: WFSH-CA11 WFSH-CA12	Perform calibrations of loop instruments.	Annually
Pump room sump level: WFI-SUMP1	Perform calibrations of loop instruments.	Annually
Backup Electrical Equipment		
Diesel generator	Verify operability.	Monthly
Uninterruptible power supply	Verify output voltage and inspect battery for signs of damage or tampering.	Annually
Fire Systems		
Fire suppressant and notification systems (i.e., sprinkler system and fire alarm pull boxes)	Water flow alarm tests of the sprinkler system to ensure the operation of a single sprinkler head will transmit an alarm, and that any of the manual fire alarm boxes will properly transmit an alarm signal.	Annually
Visual inspection of the physical condition of the sprinkler system, testing, and calibration of smoke detectors, and testing of heat detectors	A visual inspection of the sprinkler system to ensure system integrity as well as the required testing and calibration of detectors to ensure functionality. A flow test at the sprinkler system is performed to ensure proper flow to the system riser.	Biennial
Annual ignitable and reactive waste inspection	Inspect areas where ignitable or reactive wastes are permitted to be stored per WAC~~-~~ 173-303-395(1)(d).	Annually

[1] Continuously: an operator must be present in the control room to respond to alarms.
Monthly: Once each calendar month~~at least every 31 days~~
Annually: Once each calendar year, not to exceed~~at least every~~ 365 days
Biennial Once every 2 years, not to exceed ~~every~~ 730 days

CHAPTER 7.0
CONTINGENCY PLAN

CONTENTS

7.0 CONTINGENCY PLAN 7.1
7.1 Building Evacuation Routing (Building Layout) 7.3
7.2 Building Emergency Director 7.3
7.3 Implementation of the Contingency Plan 7.3
7.3.1 Protective Actions Responses 7.4
7.3.2 Response to Facility Operations Emergencies 7.5
7.3.3 Prevention of Recurrence or Spread of Fires, Explosions, or Releases 7.6
7.3.4 Incident Recovery and Restart of Operations 7.6
7.3.5 Incompatible Waste 7.7
7.3.6 Post Emergency Equipment Maintenance and Decontamination 7.7
7.4 Emergency Equipment 7.7
7.4.1 Fixed Emergency Equipment 7.8
7.4.2 Portable Emergency Equipment 7.8
7.4.3 Communications Equipment/Warning Systems 7.8
7.4.4 Personal Protective Equipment 7.8
7.4.5 Spill Control and Containment Supplies 7.9
7.4.6 Incident Command Post 7.9
7.5 Required Reports 7.9
7.6 Plan Location and Amendments 7.9
7.7 Facility/Building Emergency Response Organization 7.9

FIGURE

Figure 7.1. 242 A Evaporator Evacuation Routes 7.10
Figure 7.2. 242-A Evaporator Staging Areas 7.11

TABLE

Table 7.1 Hanford Facility Documents Containing Contingency Plan Requirements of WAC 173-303-350(3) 7.1

This page intentionally left blank.

7.0 CONTINGENCY PLAN

The applicable WAC 173-303 requirements for a contingency plan at 242-A Evaporator are satisfied in the following documents: portions of the Hanford Facility RCRA Permit (Permit) Attachment 4 *Hanford Emergency Management Plan* (DOE/RL-94-02) and this Chapter.

The unit-specific building emergency plan also serves to satisfy a broad range of other requirements [e.g., Occupational Safety and Health Administration standards (29 CFR 1910), *Toxic Substances Control Act of 1976* (40 CFR 761), and U.S. Department of Energy Orders]. Therefore, revisions made to portions of this unit-specific building emergency plan that are not governed by the requirements of WAC 173-303 will not be considered as a modification subject to WAC 173-303-830 or Permit Condition I.C.3.

Table 7.1 identifies the sections of the unit-specific building emergency plan written to meet WAC 173-303-350(3) contingency plan requirements identified in this Chapter. In addition, Section 12.0 of the unit-specific 242-A Evaporator building emergency plan is written to meet WAC 173-303 requirements identifying where copies of the *Hanford Emergency Management Plan* (DOE/RL-94-02) and the building emergency plan are located and maintained on the Hanford Facility. Therefore, revisions to Section 12.0 of the building emergency plan and the portions identified in Table 7.1 are considered a modification subject to WAC 173-303-830 or Permit Condition I.C.3.

~~**Table 7.1 Hanford Facility Documents Containing Contingency Plan Requirements of WAC 173-303-350(3)**~~

Table 7.2 Hanford Facility Documents Containing Contingency Plan Requirements of WAC 173-303-350(3)

Requirement	Permit Attachment 4 Hanford Emergency Management Plan (DOE/RL-94-02)	Building Emergency Plan[1] (RPP-27867)	Chapter 7.0
-350(3)(a) - A description of the actions which facility personnel must take to comply with this section and WAC 173-303-360	X[2] Section 1.3.4	X[2] Sections 7.1, 7.2 through 7.2.5, and 7.3 Sections 4.0, 8.2, 8.3, 8.4, and 11.0	X[2] Sections 7.3.1, 7.3.2, through 7.3.2.5, and 7.3.3 Sections 7.3, 7.3.4, 7.3.5, 7.3.6, and 7.5
-350(3)(b) - A description of the actions which shall be taken in the event that a dangerous waste shipment, which is damaged or otherwise presents a hazard to the public health and the environment, arrives at the facility, and is not acceptable to the owner or operator, but cannot be transported pursuant to the requirements of WAC 173-303-370(6), Manifest system, reasons for not accepting dangerous waste shipments	X[2] Section 1.3.4	X[2, 3] Section 7.2.5.1	X[2, 3] Section 7.3.2.5.1
-350(3)(c) - A description of the arrangements agreed to by local police departments, fire departments, hospitals, contractors, and state and local emergency response teams to coordinate emergency services as required in WAC 173-303-340(4).	X Sections 3.2.3, 3.3.1, 3.3.2, 3.4, 3.4.1.1, 3.4.1.2, 3.4.1.3, 3.7, and Table 3.1		

Table 7.2 Hanford Facility Documents Containing Contingency Plan Requirements of WAC 173-303-350(3)

Requirement	Permit Attachment 4 Hanford Emergency Management Plan (DOE/RL-94-02)	Building Emergency Plan[1] (RPP-27867)	Chapter 7.0
-350(3)(d) - A current list of names, addresses, and phone numbers (office and home) of all persons qualified to act as the emergency coordinator required under WAC 173-303-360(1). Where more than one person is listed, one must be named as primary emergency coordinator, and others must be listed in the order in which they will assume responsibility as alternates. For new facilities only, this list may be provided to the department at the time of facility certification (as required by WAC 173-303-810 (14)(a)(I)), rather than as part of the permit application.		X[1] Sections 3.1 and 13.0	X[4] Sections 7.2 and 7.7
-350(3)(e) - A list of all emergency equipment at the facility (such as fire extinguishing systems, spill control equipment, communications and alarm systems, and decontamination equipment), where this equipment is required. This list must be kept up to date. In addition, the plan must include the location and a physical description of each item on the list, and a brief outline of its capabilities.		X Section 9.0	X Section 7.4
-350(3)(f) - An evacuation plan for facility personnel where there is a possibility that evacuation could be necessary. This plan must describe the signal(s) to be used to begin evacuation, evacuation routes, and alternate evacuation routes.	X[5] Figure 7.3 and Table 5.1	X[6] Section 1.5	X[6] Section 7.1

An 'X' indicates requirement applies.

[1] Portions of Permit Attachment 4, *Hanford Emergency Management Plan* (DOE/RL-94-02) not enforceable through Appendix A of that document are not made enforceable by reference in the building emergency plan.

[2] Permit Attachment 4, *Hanford Emergency Management Plan* (DOE/RL-94-02) contains descriptions of actions relating to the Hanford Site Emergency Preparedness System. No additional descriptions of actions are required at the site level. If other credible scenarios exist or if emergency procedures at the unit are different, the description of actions contained in the building emergency plan will be used during an event by a building emergency director.

[3] This requirement only applies to treatment, storage, and disposal (TSD) units that receive shipment of dangerous or mixed waste defined as offsite shipments in accordance with WAC 173-303.

[4] Emergency Coordinator names and home telephone numbers are maintained separate from any contingency plan document on file in accordance with Permit Condition II.A.4 and are updated, at a minimum, monthly.

[5] The Hanford Facility (site wide) signals are provided in this document. No unit/building signal information is required unless unique devices are used at the unit/building.

[6] An evacuation route for the TSD unit must be provided. Evacuation routes for occupied buildings surrounding the TSD unit are provided through information boards posted within buildings.

7.1 Building Evacuation Routing (Building Layout)

Figures 7.1 and 7.2 provide identification of the primary and secondary staging areas and a general layout of the 242-A Evaporator. Alternate evacuation routes will be used on a case-by-case basis, based on the type of event and meteorological conditions at the time of the event.

7.2 Building Emergency Director

Emergency response will be directed by the BED, as the Emergency Coordinator, until the Incident Commander (IC) arrives. The Incident Command System (ICS) staff with supporting on call personnel then fulfill the responsibilities of the Emergency Coordinator as discussed in WAC 173-303-360.

During events, facility personnel perform response duties under the direction of the BED. The Incident Command Post (ICP) is managed by either the senior Hanford Fire Department member present on the scene or senior Hanford Patrol member present on the scene (security events only). These individuals are designated as the IC and as such, have the authority to request and obtain any resources necessary for protecting people and the environment. The BED becomes a member of the ICP and functions under the direction of the IC. In this role, the BED continues to manage and direct facility operations.

A listing of BEDs by title, work location, and work telephone numbers is contained in Section 7.7, Facility/Building Emergency Response Organization. The BED is on the premises (200 Area; primary location is the Central Shift Office [274-AW]) or is available through an "on call" list 24 hours a day. Names and home telephone numbers of the BEDs are available from the Patrol Operations Center (POC) in accordance with Permit Condition II.A.4.

7.3 Implementation of the Contingency Plan

The BED ensures that trained personnel identify the character, source, amount, and areal extent of the release, fire, or explosion to the extent possible. Identification of waste can be made by activities that can include, but are not limited to, visual inspection of involved containers, sampling activities in the field, reference to inventory records, or by consulting with facility personnel. Samples of materials involved in an emergency might be taken by qualified personnel and analyzed as appropriate. These activities must be performed with a sense of immediacy and shall include available information.

The BED shall use the following guidelines to determine if an event has met the requirements of WAC 173-303-360(2)(d):

1. The event involved an unplanned spill, release, fire, or explosion,

AND

2.a The unplanned spill or release involved a dangerous waste, or the material involved became a dangerous waste as a result of the event (e.g., product that is not recoverable.),

OR

2.b The unplanned fire or explosion occurred at the 242-A Evaporator or transportation activity subject to RCRA contingency planning requirements,

AND

3. Time urgent response from an emergency services organization was required to mitigate the event or a threat to human health or the environment exists.

As soon as possible, after stabilizing event conditions, the BED shall determine, in consultation with the site contractor ~~-~~environmental single point-of-contact (POC), if notification to the Washington State Department of Ecology (Ecology) is needed to meet WAC 173 303-360(2)(d) reporting requirements. If all of the conditions under 1, 2, and 3 are met, notifications are to be made to Ecology. Additional information is found in Permit Attachment 4, *Hanford Emergency Management Plan* (DOE/RL-94-02, Section 4.2).

If review of all available information does not yield a definitive assessment of the danger posed by the incident, a worst-case condition will be presumed and appropriate protective actions and notifications will

be initiated. The BED is responsible for initiating any protective actions based on their best judgment of the incident.

The BED must assess each incident to determine the response necessary to protect the personnel, facility, and the environment. If assistance from Hanford Patrol, Hanford Fire Department, or ambulance units is required, the Hanford Emergency Response Number (911 from site office phones/373-0911 from cellular phones) must be used to contact the POC and request the desired assistance.

7.3.1 Protective Actions Responses

Protective action responses are discussed in the following sections ~~7.3.1.1 and 7.3.1.2~~. The steps identified in the ~~following~~ description of actions do not have to be performed in sequence because of the unanticipated sequence of incident events.

7.3.1.1 Evacuation

The objective of a facility evacuation order is to limit personnel exposure to hazardous materials or dangerous/mixed waste by increasing the distance between personnel and the hazard. The scope of the evacuation includes evacuation of the facility due to an event at the facility as well as evacuation of the facility in response to a site evacuation order. Evacuation is directed by the BED when conditions warrant and applies to all personnel not actively involved in the event response or in emergency plan related activities.

The BED initiates the evacuation by directing an announcement be made to evacuate along with the evacuation location over the public address system and facility radios. Personnel proceed to a predetermined staging area (shown in Figure 7.2), or other safe upwind location, as determined by the BED. The BED determines the operating configuration of the facility and identifies any additional protective actions to limit personnel exposure to the hazard.

Emergency organization personnel or assigned operations personnel conduct a sweep of occupied buildings to ensure that all personnel and visitors have evacuated. For an immediate evacuation, accountability is performed at the staging area. The BED assigns personnel as accountability aides and staging area managers with the responsibility to ensure that evacuation actions are taken at the 242-A Evaporator. All implementing actions executed by the aides/managers are directed by the emergency response procedures. When evacuation actions are complete, the aides/managers provide a status report to the BED. The BED provides status to the IC.

7.3.1.2 Take Cover

The objective of the take cover order is to limit personnel exposure to hazardous or dangerous/mixed waste when evacuation is inappropriate or not practical. Evacuation might not be practical or appropriate because of extreme weather conditions or the material release might limit the ability to evacuate safely personnel.

The BED initiates the take cover by directing an announcement be made over the public address system and facility radios, and, as conditions warrant, by activating the 200 Area take cover alarms by calling the POC using 911 from site office phones/373-0911 from cellular phones. Actions to complete a facility take cover order are directed by the emergency response procedure. Protective actions associated with operations include configuring, or shutting down, the ventilation systems. Determination of additional take cover actions is based on operating configuration, weather conditions, amount and duration of release, and other conditions, as applicable to the event and associated hazard. As a minimum, personnel exposure to the hazard is minimized. The BED assigns personnel as accountability aides with responsibility to ensure that take cover actions are taken at all occupied buildings at the 242-A Evaporator. When take cover actions are complete, the aides/managers provide the BED with a status report.

7.3.2 Response to Facility Operations Emergencies

Depending on the severity of the event, the BED reviews the site~~ ~~-wide procedures and 242-A Evaporator emergency response procedure(s) and, as required, categorizes and/or classifies the event. If necessary, the BED initiates area protective actions and Hanford Site Emergency Response Organization activation. The steps identified in the following description of actions do not have to be performed in sequence because of the unanticipated sequence of incident events.

7.3.2.1 Loss of Utilities

A case-by-case evaluation is required for each event to determine loss of utility impacts. When a BED determines a loss of utility impact, actions are taken to ensure dangerous and/or mixed waste is being properly managed~~,~~ to the extent possible given event circumstances. As necessary, the BED will stop operations and take appropriate actions until the utility is restored. If loss of utilities at the 242-A Evaporator results in a major process disruption/loss of plant control, notifications in Section 7.3.2.2 are performed.

7.3.2.2 Major Process Disruption/Loss of Plant Control

Upon loss of the MCS, the Shift Manager is notified while an attempt is made to return the MCS to service. If a dump of the vapor-liquid separator (C-A-1) vessel does occur, AW Tank Farm personnel are notified of impending over pressurization of DST ~~s~~System feed tank 241-AW-102, and all personnel in the AW Tank Farm evacuate to the change trailer. Non-essential personnel exit the 242-A Evaporator facility.

The system condition is assessed, and corrective actions are implemented. Operations are placed on recirculation by securing the slurry pump and waste feed to the plant. Facility shutdown is accomplished by performing manual, localized actions such as system isolation, equipment shutdown, etc.

7.3.2.3 Pressure Release

If mixed waste release occurs, perform actions identified in Section 7.3.2.5.

7.3.2.4 Fire and/or Explosion

In the event of a fire, the discoverer activates a fire alarm; calls 911 from site office phones/373-0911 from cellular phones or verifies that 911 has been called. Automatic initiation of a fire alarm (by the smoke detectors, sprinkler systems, ~~and~~ or pull boxes) is also possible.

- Unless otherwise instructed, personnel shall evacuate the area/building by the nearest safe exit and proceed to the designated staging area for accountability.
- On actuation of the fire alarm, ONLY if time permits, personnel should shut down equipment, secure waste, and lock up classified materials (or hand carry them out). The alarm automatically signals the Hanford Fire Department.
- The BED proceeds directly to the ICP, obtains all necessary information pertaining to the incident, and sends a representative to meet Hanford Fire Department.
- The BED provides a formal turnover to the IC when the IC arrives at the ICP.
- The BED informs the Hanford Site Emergency Response Organization as to the extent of the emergency (including estimates of dangerous waste, mixed waste, or radioactive material quantities released to the environment).
- If operations are stopped in response to the fire, the BED ensures that systems are monitored for leaks, pressure buildup, gas generation, and ruptures.
- Hanford Fire Department firefighters extinguish the fire as necessary.

NOTE: Following a fire and/or explosion, WAC 173-303-640(7) will be addressed for the 242-A Evaporator regarding fitness for use.

7.3.2.5 Hazardous Material, Dangerous and/or Mixed Waste Spill

Spills of hazardous materials, dangerous or mixed waste can result from many sources including process leaks, container spills or leaks, damaged packages or shipments, or personnel error. Spills of mixed waste are complicated by the need to deal with the extra hazards posed by the presence of radioactive materials. Abnormal radiation actions also may be implemented if conditions are warranted. Timeframes for specific responses may be affected by radiological conditions.

- The discoverer notifies the BED and initiates SWIM response:
  - **S**tops work
  - **W**arns others in the vicinity
  - **I**solates the area
  - **M**inimizes the spill if possible
- The BED determines if emergency conditions exist requiring response from the Hanford Fire Department, based on classification of the spill and injured personnel, and evaluates need to perform additional protective actions.
- If the Hanford Fire Department resources are not needed, the spill is mitigated with resources identified in Section 7.4 and proper notifications are made.
- If the Hanford Fire Department resources are needed, the BED calls 911 from site office phones/373-0911 from cellular phones.
- The BED sends a representative to meet the Hanford Fire Department.
- The BED provides a formal turnover to the IC when the IC arrives at the ICP.
- The BED informs the Hanford Site Emergency Response Organization as to the extent of the emergency (including estimates of dangerous waste, mixed waste, or radioactive material quantities released to the environment).
- If operations are stopped in response to the spill, the BED ensures that systems are monitored for leaks, pressure buildup, gas generation, and ruptures.
- Hanford Fire Department stabilizes the spill.

NOTE: For response to leaks or spills and disposition of leaking or unfit-for-use tank systems, refer to WAC 173-303-640(7).

7.3.2.5.1 Damaged or Unacceptable Shipments

The 242-A Evaporator is designed to receive waste from the double-shell tank (DST) system through existing underground piping. The 242-A Evaporator does not receive dangerous or mixed waste shipments that require manifesting. The notifications required by WAC 173-303-360(2)(j) and the reporting requirements of WAC 173-303-640(7)(d)(i) may be made via telephone conference.

7.3.3 Prevention of Recurrence or Spread of Fires, Explosions, or Releases

The BED, as part of the ~~i~~Incident ~~c~~Command ~~s~~System, takes the steps necessary to ensure that a secondary release, fire, or explosion does not occur. The BED will take measures, where applicable, to stop processes and operations, collect and contain released wastes and remove or isolate containers. The BED shall also monitor for leaks, pressure buildups, gas generation, or ruptures in valves, pipes or other equipment, whenever this is appropriate.

7.3.4 Incident Recovery and Restart of Operations

A recovery plan is developed when necessary in accordance with Permit Attachment 4, *Hanford Emergency Management Plan* (DOE/RL-94-02, Section 9.2). A recovery plan is needed following an event where further risk could be introduced to personnel, the 242-A Evaporator, or the environment through recovery action and/or to maximize the preservation of evidence.

If this plan was implemented according to Section 7.3, ~~the Washington State Department of~~ Ecology is notified before operations can resume. The Permit Attachment 4, *Hanford Emergency Management Plan* (DOE/RL-94-02, Section 5.1) discusses different reports to outside agencies. This notification is in addition to those required reports and includes the following statements:

a. There are no incompatibility issues with the waste and released materials from the incident.

b. All the equipment has been cleaned, fit for its intended use, and placed back into service.

The notification required by WAC 173-303-360(2)(j) and WAC 173-303-640(7)(d)(i) may be made via telephone conference. Additional information that Ecology requests regarding these restart conditions will be included in the required 15-day report identified in Section 7.5 of this plan.

For emergencies not involving activation of the Hanford Emergency Operations Center (EOC), the BED ensures that conditions are restored to normal before operations are resumed. If the Hanford Site ERO~~Emergency Response Organization~~ was activated and the emergency phase is complete, a special recovery organization could be appointed at the discretion of RL to restore conditions to normal. This process is detailed in RL and contractor emergency procedures. The makeup of this organization depends on the extent of the damage and the effects. The onsite recovery organization will be appointed by the appropriate contractor's management.

7.3.5 Incompatible Waste

After an event, the BED or the onsite recovery organization ensures that no waste that might be incompatible with the released material is treated, stored, and/or disposed of until cleanup is completed. Cleanup actions are taken by 242-A Evaporator personnel or other assigned personnel. Permit Attachment 4, *Hanford Emergency Management Plan* (DOE/RL-94-02, Section 9.2.3), describes actions to be taken.

Waste from cleanup activities is designated and managed as newly generated waste. Perform as necessary, field checks for waste compatibility before storage. Incompatible wastes are not placed in the same container. Containers of waste are placed in storage areas appropriate for their compatibility class.

If incompatibility of waste was a factor in the incident, the BED or the onsite recovery organization ensures that the cause is corrected.

7.3.6 Post Emergency Equipment Maintenance and Decontamination

All equipment used during an incident is decontaminated (if practicable) or disposed of as spill debris. Decontaminated equipment is checked for proper operation before storage for subsequent use. Consumable and disposed materials are restocked. Fire extinguishers are replaced.

The BED ensures that all equipment is cleaned and fit for its intended use before operations are resumed. Depleted stocks of neutralizing and absorbing materials are replenished~~, self-contained breathing apparatus are cleaned, and refilled, protective clothing is cleaned or disposed of and restocked, etc~~.

7.4 Emergency Equipment

Emergency resources and equipment for the 242-A Evaporator are presented in this section.

7.4.1 Fixed Emergency Equipment

Type	Location	Capability
Safety shower/eye wash station	1 - Aqueous makeup room (AMU) -south side. Next to truck load in airlock and chemical storage tank 1 - Condenser room basement, SE corner 1 - Condenser room 4th floor	Assist in flushing chemicals/materials from body and/or eyes and face
Wet pipe sprinkler system	Located throughout the facility	Assist in the control of fire
Fire alarm pull boxes	Located throughout the facility	Activates the building fire alarm and notifies the Hanford Fire Department (HFD)
Emergency lighting (lanterns)	Located throughout the facility	Provide 1 hour of temporary lighting
Back-up diesel generator	50 ft SE of the 242-A main entrance	Provide back-up power

7.4.2 Portable Emergency Equipment

Type	Location	Capabilities
General purpose fire extinguishers	Throughout the 242-A Evaporator facility	Fire suppression for class A, B, C, fires
Halotron fire extinguishers	Two in the 242-A control room	Suppress electrical fires

7.4.3 Communications Equipment/Warning Systems

Type	Location	Capability
Fire alarms	Located throughout the facility in halls, corridors, and locker rooms	Audible throughout the 242-A Evaporator Building
Hanford Site Area Siren	200 East Area utility poles the nearest one is located along 4th street where it bends at 275EA to the southwest of 242-A Evaporator	Provides warning to personnel to take cover or evacuate. This siren is identified in DOE/RL~~-~~-94-02, Section 5.2.5.
Operations process alarms from MCS or hard wired alarm panels	242-A Evaporator control room	Audible in the 242-A Evaporator control room
Public address system (PAX)	Located throughout the 242-A Evaporator Building (except in pump and evaporator rooms)	Provides communications and public address capabilities
Portable Radios	242-A control room	Communication to the 242-A control room
Telephone	242-A control room, office areas, AMU room, and condenser room.	Internal and external communications. Allows notification of outside resources (HFD, Hanford Patrol, etc.)

7.4.4 Personal Protective Equipment

Type	Location	Capability
Respirators	242-A ~~respirator storage~~ control room	Filtered or supplied air for recovery of known hazards

7.4.5 Spill Control and Containment Supplies

Type	Location	Capability
Spill kit	Survey area next to personnel protective equipment storage room (exterior wall to Aqueous Make-up room), wall mounted	Provides spill control materials

7.4.6 Incident Command Post

If the ICP is activated, the BED will notify appropriate personnel of its location by either the public address system, radios, or telephones. Emergency resource materials are stored at each location. The IC could activate the Hanford Fire Department Mobile Command Unit if necessary.

7.5 Required Reports

Post incident written reports are required for certain incidents on the Hanford Site. The reports are described in Permit Attachment 4, *Hanford Emergency Management Plan* (DOE/RL-94-02, Section 5.1).

Facility management must note in the TSD unit-specific operating record, the time, date, and details of any incident that requires implementation of the contingency plan (refer to Section 7.3 of this plan). Within fifteen (15) days after the incident, a written report must be submitted to Ecology. The report must include the elements specified in WAC 173-303-360(2)(k) and WAC 173-303-640(7)(d)(ii).

7.6 Plan Location and Amendments

A copy~~Copies~~ of this plan is~~are~~ maintained at the following locations:

- 242-A Evaporator Control Room
- Central Shift Office (274-AW)

This plan will be reviewed and immediately amended as necessary, in accordance with Permit Attachment 4, *Hanford Emergency Management Plan* (DOE/RL-94-02, Section 14.3.1.1).

7.7 Facility/Building Emergency Response Organization

242-A Evaporator Building Emergency Directors			
Title		**Work Location**	**Work Phone**
Primary	Central Shift Manager	200 Areas. Primary location is the Central Shift Office	373-2689
Alternate	Alternate BED	200 Areas	373-2689

Names and home telephone numbers of the BEDs are available from the POC (373-3800) in accordance with Permit Condition II.A.4.

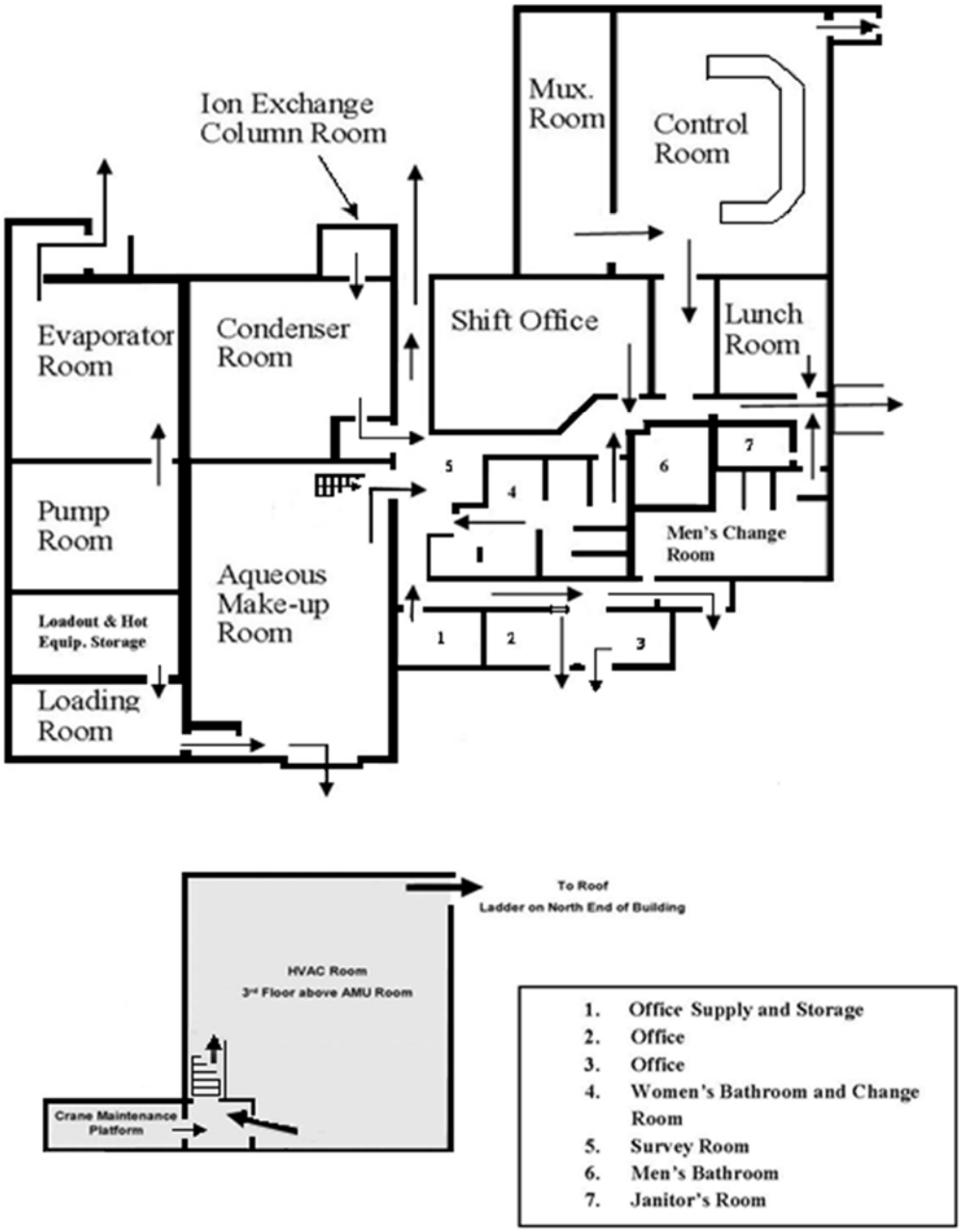

Figure 7.1. 242 A Evaporator Evacuation Routes

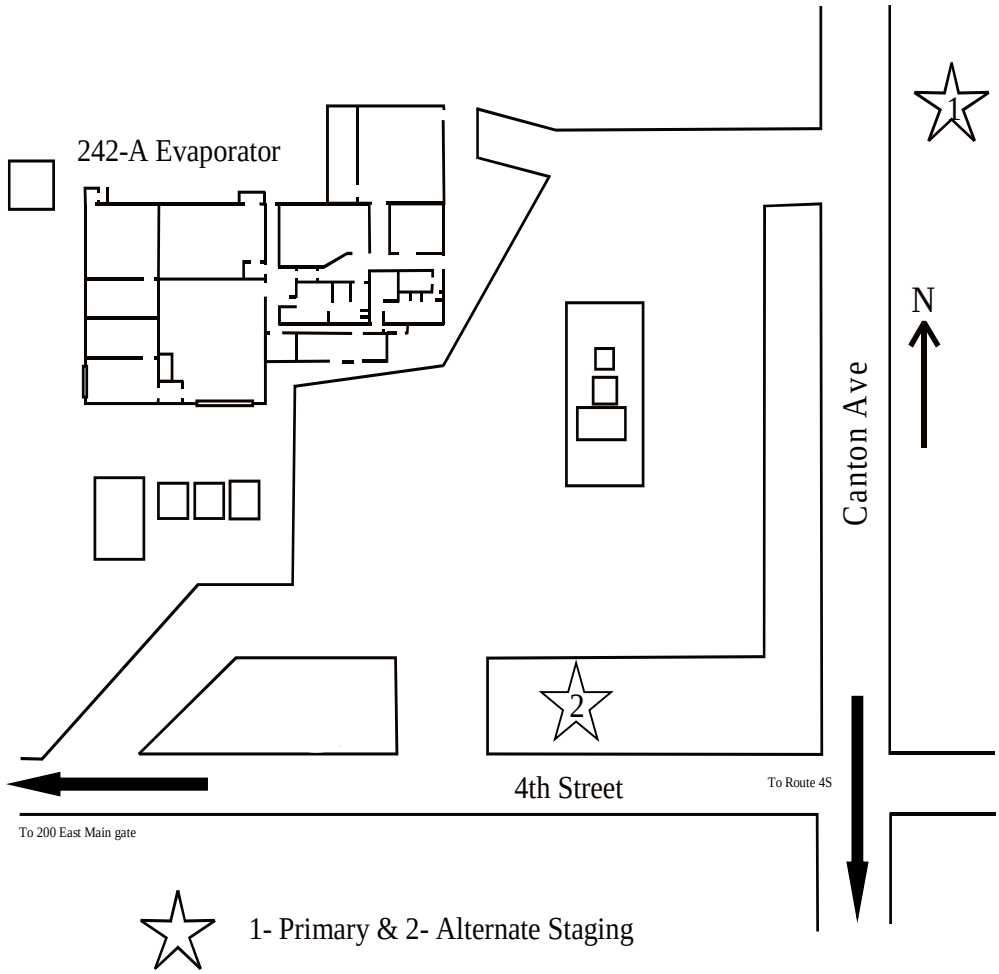

Figure 7.2. 242-A Evaporator Staging Areas

This page intentionally left blank.