OFFICE OF RIVER PROTECTION
P.O. Box 450, MSIN H6-60
Richland, Washington 99352

SEP 24 2015

15-ECD-0043

Ms. Jane A. Hedges, Program Manager
Nuclear Waste Program
Washington State
Department of Ecology
3100 Port of Benton Blvd.
Richland, Washington 99354

Ms. Hedges:

SUBMITTAL OF DANGEROUS WASTE PERMIT DESIGN PACKAGE LAW-028, REV. 0, FOR THE LOW-ACTIVITY WASTE FACILITY MELTER OFFGAS CAUSTIC SCRUBBER; AND LAW-026A, REV. 1, FOR THE LOW-ACTIVITY WASTE FACILITY HEPA PREHEATERS

References:

1. BNI letter from M.G. McCullough to K.W. Smith, ORP, "Submittal of Dangerous Waste Permit Package LAW-026A, Revision 0, for the Low-Activity Waste Vitrification Facility," CCN: 262122, dated May 16, 2014.

2. Ecology letter from S. Dahl to K.W. Smith, ORP, B.K. Johnson, MSA, S.L. Charboneau, RL, M.H. Schlender, PNNL, P. McCullough, BNI, S.M. Sax, WCH, J.A. Ciucci, CH2M HILL, and L.D. Olson, WRPS, "Withdrawal of the Proposed September 2014 Permit Modification for the *Hanford Facility Resource Conservation and Recovery Act Permit, Dangerous Waste*, Part III, Operating Unit Group 10, Waste Treatment and Immobilization Plant, WA7890008967," 15-NWP-032, dated April 24, 2015.

This letter submits two permit design packages LAW-028, Rev. 0, and LAW-026A, Rev. 1, for incorporation into the Hanford Resource Conservation and Recovery Act Permit, Operating Unit 10. Both packages have been reviewed by Washington State Department of Ecology (Ecology) and comments were incorporated.

The Caustic Scrubber, LAW-028, Rev. 0, is part of the Low-Activity Waste secondary offgas/vessel vent process system (Attachment 1). This permit design package supports completion of Compliance Item 23. One permit design package remains to be submitted to complete Compliance Item 23.

Attachment 2 provides the Low-Activity Waste Facility permit design package LAW-026A, Rev. 1. This package is a revision of the one that was originally submitted in Reference 1. Ecology withdrew that package due to responses it received during a public comment period, citing specific concerns related to materials of construction and corrosion evaluation

documentation (Reference 2). In addition to addressing Ecology's comments, this submittal also addresses public comments.

These permit design package submittals are certified coincident with issuance of the integrity assessment reports contained in the packages. Permit-affecting design changes not included in or occurring after issuance of the final integrity assessment reports will be processed in accordance with dangerous waste permit requirements for permit modifications. The installation of equipment and components will be done in accordance with permit packages that are approved and incorporated into the dangerous waste permit by Ecology.

If you have any questions, please contact me, or your staff may contact Robert G. Hastings, Assistant Manager, Technical and Regulatory Support, (509) 376-9824.

Kevin W. Smith
Manager

ECD:GMN

Attachments: (2)

cc w/attachs:
B.L. Curn, BNI
B.G. Erlandson, BNI
S. Greagor, BNI
M. McCullough, BNI
S.K. Murdock, BNI
D.C. Robertson, BNI
Administrative Record (WTP H-0-8)
BNI Correspondence
Environmental Portal, LMSI

cc w/o attachs:
J. Cox, CTUIR
S.G. Harris, CTUIR
S.L. Dahl, Ecology
D. McDonald, Ecology
G.P. Bohnee, NPT
K. Niles, Oregon Energy
E.D. MacAlister, RL
R. Jim, YN

cc electronic:
J. Cantu, Ecology (2 hard copies)
A.S. Carlson, Ecology (8 hard copies)
T.Z. Gao, Ecology
M.E. Jones, Ecology
J.K. Perry, MSA
A.C. McKarns, RL

Attachment 1
15-ECD-0043
(94 Pages)

Low-Activity Waste Facility Dangerous Waste Permit Design Package
LAW-028, Revision 0.

Design Package No. LAW-028, Rev. 0, for the LAW Facility LVP System Miscellaneous Unit (LAW Melter Offgas Caustic Scrubber) Table of Contents

For Incorporation into the Permit

Engineering Document	Document Number	Revision	Permit Conditions	Included	Remarks
IQRPE Independent Assessment Report	24590-CM-HC4-HXYG-00240-02-00013	0~~0~~A	III.10.H.5.c.i	Y	Incorporate IQRPE report into Appendix 9.11
Permit Drawings					
General Arrangement Plan at El. 48 ft	24590-LAW-P1-P01T-00005	5	III.10.H.5.c.ii	N	In Appendix 9.4, Revision 5 included in LAW-025
Process Flow Diagram - LAW Vitrification Secondary Offgas Treatment (System LVP)	24590-LAW-M5-V17T-00011	5	III.10.H.5.c.ii	N	In Appendix 9.1
PFD Drawing Change Notices	24590-LAW-M5N-V17T-00012 24590-LAW-M5N-V17T-00019 24590-LAW-M5N-V17T-00023 24590-LAW-M5N-V17T-00029	N/A	III.10.H.5.c.ii		In Appendix 9.1
Piping & Instrumentation Diagram	24590-LAW-M6-LVP-00002002	0	III.10.H.5.c.ii	N	In Appendix 9.2
Drawing Change Notice for 24590-LAW-M6-LVP-00002002	24590-LAW-M6N-LVP-00092	N/A	III.10.H.5.c.ii	N	Provided to Ecology in CCN 254078
Mechanical Data Sheets					
Mechanical Data Sheet for the LAW Melter Offgas Caustic Scrubber	24590-LAW-MKD-LVP-00011	6	III.10.H.5.c.ii III.10.H.5.c.vi	Y	Incorporate into Appendix 9.6
Mechanical Drawings					
Vendor - Mechanical Drawing for the LAW Melter Offgas Caustic Scrubber	24590-QL-POA-MKAS-00003-04-00050 24590-QL-POA-MKAS-00003-04-00051 24590-QL-POA-MKAS-00003-04-00052	00E 00E 00E	III.10.H.5.c.ii III.10.H.5.c.vi	Y	Incorporate into Appendix 9.6
Corrosion Evaluations					
LVP-SCB-00001 Corrosion Evaluation LAW Melter Offgas Caustic Scrubbers	24590-LAW-N1D-LVP-00001	7	III.10.H.5.c.iii III.10.H.5.c.v	Y	Incorporate into Appendix 9.9

Design Package No. LAW-028, Rev. 0, for the LAW Facility LVP System Miscellaneous Unit (LAW Melter Offgas Caustic Scrubber) Table of Contents

For Incorporation into the Permit

Engineering Document	Document Number	Revision	Permit Conditions	Included	Remarks
Engineering Specifications					
Engineering Specification for LAW Melter Offgas Caustic Scrubber	24590-LAW-3PS-MKAS-T0001	2	III.10.H.5.c.ii III.10.H.5.c.iii III.10.H.5.c.vi	Y	Incorporate into Appendix 9.7
Technical Change Notice (TCN) to Engineering Specification for LAW Melter Offgas Caustic Scrubber	24590-QL-MRA-MKAS-00003-T0009	N/A		N	Provided to Ecology in CCN 267882
Technical Change Notice (TCN) to Engineering Specification for LAW Melter Offgas Caustic Scrubber	24590-QL-MRA-MKAS-00003-T0010	N/A		N	Provided to Ecology in CCN 267882
Technical Change Notice (TCN) to Engineering Specification for LAW Melter Offgas Caustic Scrubber	24590-QL-MRA-MKAS-00003-T0011	N/A		N	Provided to Ecology in CCN267882
Specification Change Notices LAW - Add Technical Notes From Material Requisition Into Specification	24590-LAW-3PN-MKAS-00003	N/A		N	Provided to Ecology in CCN 267877
Supplier Deviation Disposition Request - LAW Melter Offgas Caustic Scrubber	24590-WTP-SDDR-MS-14-00067	N/A		N	Provided to Ecology in CCN 267878
Supplier Deviation Disposition Request - LAW Melter Offgas Caustic Scrubber	24590-WTP-SDDR-MS-14-00070	N/A		N	Provided to Ecology in CCN 267882
Supplier Deviation Disposition Request - LAW Melter Offgas Caustic Scrubber	24590-WTP-SDDR-MS-14-00082	N/A		N	Provided to Ecology in CCN 267888
Supplier Deviation Disposition Request - LAW Melter Offgas Caustic Scrubber	24590-WTP-SDDR-MS-14-00085	N/A		N	Provided to Ecology in CCN 267884
Supplier Deviation Disposition Request - LAW Melter Offgas Caustic Scrubber	24590-WTP-SDDR-MS-15-00002	N/A		N	Provided to Ecology in CCN 267886

Design Package No. LAW-028, Rev. 0, for the LAW Facility LVP System Miscellaneous Unit (LAW Melter Offgas Caustic Scrubber) Table of Contents

For Incorporation into the Permit

Engineering Document	Document Number	Revision	Permit Conditions	Included	Remarks
Supplier Deviation Disposition Request - LAW Melter Offgas Caustic Scrubber	24590-WTP-SDDR-MS-15-00003	N/A		N	Provided to Ecology in CCN 267886
Supplier Deviation Disposition Request - LAW Melter Offgas Caustic Scrubber	24590-WTP-SDDR-MS-15-00007	N/A		N	Provided to Ecology in CCN 275843
Engineering Specification for Positive Material Identification (PMI) for Shop Fabrication	24590-WTP-3PS-G000-T0002	9	III.10.H.5.c.ii III.10.H.5.c.iii III.10.H.5.c.vi	Y	Incorporate into Appendix 7.7
Engineering Specification for Pressure Vessel Design and Fabrication	24590-WTP-3PS-MV00-T0001	5		N	In Appendix 7.7 (In LAW-025 package)
Engineering Specification for Seismic Qualification Criteria for Pressure Vessels	24590-WTP-3PS-MV00-T0002	3		N	In Appendix 7.7
Engineering Specification for Pressure Vessel Fatigue Analysis	24590-WTP-3PS-MV00-T0003	3		N	In Appendix 7.7
Secondary Containment Design	24590-WTP-PER-CSA-02-001	10	III.10.H.5.c.ii III.10.H.5.c.iii	N	In Appendix 7.5
Underground Pipe Protection	Not applicable	-	III.10.H.5.c.iv	N/A	There are no underground pipes in the LAW facility El. 3 ft and above
LAW Vitrification Offgas System Bypass Analysis	24590-LAW-PER-PR-03-001	2	III.10.H.5.c.ix	N	In Appendix 9.18
Installation of Tank Systems and Miscellaneous Unit Systems	24590-WTP-PER-CON-02-001	6	III.10.H.5.c.x	N	In Appendix 7.12

Design Package No. LAW-028, Rev. 0, for the LAW Facility LVP System Miscellaneous Unit (LAW Melter Offgas Caustic Scrubber) Table of Contents

For Incorporation into the Administrative Record

Engineering Document	Document Number	Revision	Permit Condition	Included	Remarks
Structural Support Calculations for Off Spec, Non-Standard or Field Fabricated Miscellaneous Treatment Subsystems	Not Applicable - See Remarks	-	III.10.H.5.c.iii	N/A	There are no Off Spec, Non-Standard or Field Fabricated Miscellaneous Treatment Subsystems in the LAW facility
System Description for the LAW Primary Offgas (LOP) and Secondary Offgas/Vessel Vent (LVP) Systems	24590-LAW-3YD-LOP-00001	3	III.10.H.5.c.vii	N	In Administrative Record. CCN 240034)
Mass and Energy Balance Documents					
Flowsheet Bases, Assumptions, and Requirements	24590-WTP-RPT-PT-02-005	7	III.10.H.5.c.viii	N	In Administrative Record (In LAW-025)
2010 WTP Material Balance and Steady State Flowsheet Assessment, Deliverable 2.7	24590-WTP-RPT-PET-10-022	0		N	In Administrative Record (CCN 241137)
Steady-State (AE) Model Run Report for 2010 Material Balance and Process Flowsheet Analysis Assessment Report	24590-WTP-MRR-PET-10-010	0		N	In Administrative Record (CCN 241137)
Toxic Vapors and Emissions					
Control of Toxic Vapors and Emissions from WTP Tank Systems and Miscellaneous Treatment Unit Systems	24590-WTP-PER-PR-03-002	3	III.10.H.5.c.xi	N	In Administrative Record (CCN 178564)
Prevention of Hydrogen Accumulation					
Prevention of Hydrogen Accumulation	LAW Miscellaneous Treatment Unit Hydrogen Accumulation Document for the DWP Administrative Record (CCN 280210)	N/A	III.10.H.5.c.xii	N	In Administrative Record (In LAW-025)

Permit Package LAW-028 Description

LAW-028, Rev. 0, "Miscellaneous Unit Subsystem for LAW Facility LVP System (LAW Melter Offgas Caustic Scrubber)"

The Low-Activity Waste (LAW) Facility permit package LAW-028 addresses the design and installation of the LAW secondary offgas/vessel vent process system (LVP) LAW melter offgas caustic scrubber miscellaneous unit subsystem in the LAW Facility at the 48 ft. elevation.

In the LVP system, melter offgas is combined with vessel vent offgas and heated in the melter offgas HEPA preheaters to raise the temperature of the offgas above the dew point. The heated offgas then passes through HEPA filters to remove particulates. The offgas is next treated to remove mercury, iodine, and acid gasses (primarily hydrogen chloride and hydrogen fluoride) by activated carbon adsorption units. The offgas then passes through a recuperative heat exchanger, electric heater, catalytic oxidation unit, and catalytic reduction unit. The catalytic oxidation unit oxidizes volatile organic compounds and carbon monoxide to water and carbon dioxide, and the catalytic reduction unit reduces oxides of nitrogen to nitrogen and water using ammonia. The offgas is directed through the LAW melter offgas caustic scrubber to remove residual acid gasses (primarily sulfur oxides) and to provide offgas cooling. Effluent from the LAW melter offgas caustic scrubber is recirculated through the LAW caustic collection tank (LVP-TK-00001). The treated offgas is discharged to the atmosphere through the LAW stack. Exhausters provide the motive force for the offgas.

Permit Package LAW-028 includes:

- A final structural integrity assessment report signed by an independent qualified registered professional engineer (IQRPE) certifying the LAW melter offgas caustic scrubber design
- Mechanical data sheet for the LAW melter offgas caustic scrubber
- Vendor mechanical drawing for the LAW melter offgas caustic scrubber
- Corrosion evaluation for the LAW melter offgas caustic scrubber
- Engineering specification for the LAW melter offgas caustic scrubber
- Engineering specification for Positive Material Identification (PMI) for shop fabrication

The following components of this package are already included in the Dangerous Waste Permit or the Administrative Record, or they are provided with other permit packages or dangerous waste permit-related design document weekly submittals as listed in the Table of Contents:

- General arrangement plan and sections
- Process flow diagrams for the LVP system including change notices
- Piping and instrumentation diagram for the LVP caustic scrubber
- Change notice for an LVP caustic scrubber system piping and instrumentation diagram
- Change notices for the LAW melter offgas caustic scrubber specification
- Engineering specification for pressure vessel design and fabrication
- Engineering specification for seismic qualification criteria for pressure vessels
- Engineering specification for pressure vessel fatigue analysis
- Secondary containment design document
- LAW vitrification offgas system bypass analysis document
- Installation of tank systems and miscellaneous treatment unit systems document
- System description for the LOP and LVP systems
- Mass and energy balance documents
- Control of toxic vapors and emissions document
- Prevention of hydrogen accumulation documentation

R11728991

ISSUED BY
RPP-WTP PDC

AREVA

AFS-15-0283

August 11, 2015

Ms. Tess Klatt
Subcontract Administrator
Bechtel National, Inc.
2435 Stevens Center Place
Richland, Washington 99354

Dear Ms. Klatt:

BECHTEL NATIONAL, INC. CONTRACT NO. 24590-CM-HC4-HXYG-00240 IQRPE STRUCTURAL INTEGRITY ASSESSMENT REPORT FOR LAW LVP MISCELLANEOUS UNIT (MU) MELTER OFFGAS CAUSTIC SCRUBBER (LVP-SCB-00001) (IA-3013509-000)

The integrity assessment of the subject LAW LVP Miscellaneous Unit (MU) Melter Offgas Caustic Scrubber (LVP-SCB-00001) has been completed per the contract requirements and is enclosed for your use. The assessment found that the design is sufficient to ensure that the LAW LVP Miscellaneous Unit (MU) Melter Offgas Caustic Scrubber (LVP-SCB-00001) is adequately designed and has sufficient structural strength, compatibility with the waste(s) to be processed/stored/treated, and corrosion protection to ensure that it will not collapse, rupture, or fail.

If you have any questions, please contact Tarlok Hundal at (509) 371-1975, or via email at tarlok.hundal@areva.com.

Sincerely,

Elizabeth W. Smith, C.P.M
Contract Administrator
AREVA Federal Services LLC
Richland Office

Enclosure (1)

LP

cc: D. C. Pfluger, MS5-I w/enclosure (2)

AFS-AD-FRM-002 Rev 00 (Issued August 20, 2008)
Refer to AFS-AD-GDE-003, Office Administration

24590-CM-HC4-HXYG-00240-02-00013, REV-00A

IA-3013509-000

IQRPE STRUCTURAL INTEGRITY ASSESSMENT REPORT FOR LAW LVP MISCELLANEOUS UNIT (MU) MELTER OFFGAS CAUSTIC SCRUBBER (LVP-SCB-00001)

Please note that source, special nuclear and byproduct materials, as defined in the Atomic Energy Act of 1954 (AEA), are regulated at the U.S. Department of Energy (DOE) facilities exclusively by DOE acting pursuant to its AEA authority. DOE asserts; that pursuant to the AEA, it has sole and exclusive responsibility and authority to regulate source, special nuclear, and byproduct materials at DOE-owned nuclear facilities. Information contained herein on radionuclides is provided for process description purposes only.

IA-3013509-000

IQRPE STRUCTURAL INTEGRITY ASSESSMENT REPORT FOR LAW LVP MISCELLANEOUS UNIT (MU) MELTER OFFGAS CAUSTIC SCRUBBER (LVP-SCB-00001)

"I, Tarlok Singh Hundal, have reviewed and certified a portion of the design of a new tank system or component located at the Hanford Waste Treatment Plant, owned/operated by Department of Energy, Office of River Protection, Richland, Washington. My duties were independent review of the current design for the LAW LVP Miscellaneous Unit (MU) Melter Offgas Caustic Scrubber (LVP-SCB-00001), as required by the Washington Administrative Code, *Dangerous Waste Regulations*, Section WAC-173-303-640(3) (a) through (g) applicable components."

"I certify under penalty of law that I have personally examined and am familiar with the information submitted in this document and all attachments and that, based on my inquiry of those individuals immediately responsible for obtaining the information, I believe that the information is true, accurate, and complete. I am aware that there are significant penalties for submitting false information, including the possibility of fine and imprisonment."

The documentation reviewed indicates that the design fully satisfies the requirements of the WAC.

The attached review is twelve (12) pages numbered one (1) through twelve (12).

TARLOK SINGH HUNDAL
STATE OF WASHINGTON
20213
REGISTERED
PROFESSIONAL ENGINEER

Signature

8/11/2015
Date

Scope	Scope of this Integrity Assessment	The scope of this integrity assessment includes the Melter Offgas Caustic Scrubber (LVP-SCB-00001), also known as Miscellaneous Unit (MU) or Plant Item associated with the LVP system as shown on P&ID drawing 24590-LAW-M6-LVP-00002002. The LAW LVP system receives melter offgas from the Primary Offgas System (LOP) and its primary function is to ensure removal of hazardous gases within the system. This LAW Caustic Scrubber is the final decontamination equipment in the secondary offgas treatment train, and is located downstream from the Thermal Catalytic Oxidizer (TCO) unit. The Caustic Scrubber is a vertical vessel mounted on one foot high concrete pad in Room L-0304F at floor Elevation 48'-0" of the LAW facility as shown on general arrangement drawing 24590-LAW-P1-P01T-00005.
Summary of Assessment		For each item listed in the "Information Assessed" (i.e., Criteria) column, on pages following the "References" pages, the related documents listed in the "Source of Information" column, were reviewed. The aforementioned documents as described in the "Assessment" column, were found to contain adequate design requirements and controls to ensure that the design fully satisfies the requirements of State of Washington Administrative Code (WAC), Chapter 173-303 WAC, *Dangerous Waste Regulations*, Section WAC-173-303-640 (3) (a) through (g) applicable elements of the *Tank Systems*.

References	Material Requisition, Specifications, and Plant Drawings	Material Requisition (MR): 24590-QL-MRA-MKAS-00003, Rev. 3, LAW Melters Offgas Caustic Scrubber, including TCN No. 24590-QL-MRA-MKAS-00003-T0009, -T0010, & - T0011. Specifications: The following Specifications with their respective revision and Specification Change Notices (SCNs) are listed in the above listed MR: 24590-LAW-3PS-MKAS-T0001, Engineering Specification for LAW Melter Offgas Caustic Scrubber; 24590-WTP-3PS-MV00-T0001, Engineering Specification for Pressure Vessel Design and Fabrication; 24590-WTP-3PS-MV00-T0002, Engineering Specification for Seismic Qualification Criteria for Pressure Vessels; 24590-WTP-3PS-MV00-T0003, Engineering Specification for Pressure Vessel Fatigue Analysis; 24590-WTP-3PS-MVB2-T0001, Engineering Specification for Welding of Pressure Vessels, Heat Exchangers, and Boilers; 24590-WTP-3PS-G000-T0002, Engineering Specification for Positive Material Identification (PMI) for Shop Fabrication; 24590-WTP-3PS-G000-T0003, Engineering Specification for Packaging, Handling, and Storage Requirements; 24590-WTP-3PS-FB01-T0001, Engineering Specification for Structural Design Loads for Seismic Category III & IV Equipment and Tanks; Plant Drawings: 24590-LAW-P1-P01T-00005, Rev. 5, LAW Vitrification Building General Arrangement Plan at El. 48'-0"; 24590-WTP-MV-M59T-00026, Rev.1, Anchor Bolt Chair Details for Vertical Vessels; 24590-LAW-DB-S13T-00135, Rev. 9, LAW Vitrification Building Main Building Partial Concrete Forming Plan Zone 5 @ El. (+) 48'-0"; 24590-LAW-DG-S13T-00139, Rev. 1, LAW Vitrification Building Main Building Concrete Reinforcing for LVP-SCB-00001 @ TOC El. (+) 49'-0"; 24590-LAW-DB-S13T-00142, Rev. 3, LAW Vitrification Building Main Building Concrete Forming for LVP-SCB-00001 @ TOC El. (+) 49'-0"; 24590-PTF-DD-S13T-00201, Rev. 10, Pretreatment Facility Structural Concrete Wall Embeds Details-Sh. 2; 24590-WTP-DD-S13T-00004, Rev. 5, Civil/Structural Standards Standard Embedded Anchor Bolt Details; 24590-LAW-M5-V17T-00011, Rev. 5, Process Flow Diagram LAW Vit Secondary Offgas Treatment (System LVP); 24590-LAW-M6-LVP-00002002, Rev. 0, (+ DCN # 24590-LAW-M6N-LVP-00092) P&ID- LAW Secondary Offgas/Vessel Vent Process System Caustic Scrubber LVP-SCB-00001.

References (cont'd)	Vendor Fabrication Drawings, Mechanical Data Sheet, Corrosion Evaluation, and System Description	Vendor Fabrication Drawings (*Bechtel Status Code 1 and 2 Drawings): 24590-QL-POA-MKAS-00003-04-00008, Rev. 00C, LAW Melter Offgas Caustic Scrubber Elevation and Orientation; 24590-QL-POA-MKAS-00003-04-00009, Rev. 00D, LAW Melter Offgas Caustic Scrubber Packing Hold Down Grid; 24590-QL-POA-MKAS-00003-04-00010, Rev. 00C, LAW Melter Offgas Caustic Scrubber Packing Support Grid; 24590-QL-POA-MKAS-00003-04-00050, Rev. 00E, LAW Melter Offgas Caustic Scrubber Vessel Assembly: 24590-QL-POA-MKAS-00003-04-00051, Rev. 00E, LAW Melter Offgas Caustic Scrubber Vessel Assembly; 24590-QL-POA-MKAS-00003-04-00052, Rev. 00D, LAW Melter Offgas Caustic Scrubber Vessel Assembly; 24590-QL-POA-MKAS-00003-04-00053, Rev. 00D, LAW Melter Offgas Caustic Scrubber Filter Frame Assembly; 24590-QL-POA-MKAS-00003-04-00054, Rev. 00C, LAW Melter Offgas Caustic Scrubber Filter Frame Assembly; 24590-QL-POA-MKAS-00003-04-00055, Rev. 00G, LAW Melter Offgas Caustic Scrubber Vessel Weldment; 24590-QL-POA-MKAS-00003-04-00056, Rev. 00F, LAW Melter Offgas Caustic Scrubber Vessel Weldment; 24590-QL-POA-MKAS-00003-04-00057, Rev. 00H, LAW Melter Offgas Caustic Scrubber Vessel Weldment; 24590-QL-POA-MKAS-00003-04-00058, Rev. 00G, LAW Melter Offgas Caustic Scrubber Vessel Weldment; 24590-QL-POA-MKAS-00003-04-00059, Rev. 00F, LAW Melter Offgas Caustic Scrubber Filter Frame Weldment; 24590-QL-POA-MKAS-00003-04-00063, Rev. 00B, LAW Melter Offgas Caustic Scrubber Filter Frame Weldment; 24590-QL-POA-MKAS-00003-04-00064, Rev. 00B, LAW Melter Offgas Caustic Scrubber Filter Frame Weldment; 24590-QL-POA-MKAS-00003-04-00084, Rev. 00G, LAW Melter Offgas Caustic Scrubber Skirt Weldment; 24590-QL-POA-MKAS-00003-04-00085, Rev. 00C, LAW Melter Offgas Caustic Scrubber Skirt Weldment; 24590-QL-POA-MKAS-00003-04-00086, Rev. 00C, LAW Melter Offgas Caustic Scrubber Top Insulation Support Weldment; 24590-QL-POA-MKAS-00003-04-00094, Rev. 00D, LAW Melter Offgas Caustic Scrubber Top Head Weldment; 24590-QL-POA-MKAS-00003-04-00096, Rev. 00D, LAW Melter Offgas Caustic Scrubber Manway Cover Weldment; 24590-QL-POA-MKAS-00003-04-00103, Rev. 00B, LAW Melter Offgas Caustic Scrubber Filter Frame Details; 24590-QL-POA-MKAS-00003-04-00107, Rev. 00B, LAW Melter Offgas Caustic Scrubber Skirt Parts Detail; 24590-QL-POA-MKAS-00003-04-00114, Rev. 00C, LAW Melter Offgas Caustic Scrubber Vessel Flange Detail; 24590-QL-POA-MKAS-00003-04-00115, Rev. 00D, LAW Melter Offgas Caustic Scrubber General Arrangement; 24590-QL-POA-MKAS-00003-04-00117, Rev. 00B, LAW Melter Offgas Caustic Scrubber Drawing List. * Bechtel Status Code 1 Drawing is an "as fabricated vendor drawing" approved/accepted by Bechtel. Bechtel Status Code 2 Drawing is an "as fabricated vendor drawing" approved (with comments)/accepted by Bechtel. Mechanical Data Sheet (MDS): 24590-LAW-MKD-LVP-00011, Rev. 6, LAW Melter Offgas Caustic Scrubber (LVP-SCB-00001). Corrosion Evaluation: 24590-LAW-N1D-LVP-00001, Rev. 7, LAW Melter Offgas Caustic Scrubber (LVP-SCB-00001). System Description: 24590-LAW-3YD-LOP-00001, Rev. 3, System Description for the LAW Primary Offgas (LOP) and Secondary Offgas/Vessel Vent (LVP) Systems, including SDCNs # 00011, 00012, 00013, and 00015.

Information Assessed		Source of Information	Assessment
Design	Plant Item design standards are appropriate and adequate for the vessel's intended use.	Specifications, Drawings, and Mechanical Data Sheet listed above under References; ASME Boiler and Pressure Vessel Code (B&PV), Section VIII, Division 1, Rules for Construction of Pressure Vessels, American Society of Mechanical Engineers.	The LAW Caustic Scrubber (LVP-SCB-00001) is considered as a vessel. It is also interchangeably termed herein as MU or Plant Item. The Engineering Specifications for LAW Melter Offgas Caustic Scrubber and Mechanical Data Sheet require that the design and fabrication be per ASME B&PV Code, Section VIII, Division 1, with the National Board Registration code stamp. Supplementary requirements for the Scrubber are specified in the listed referenced Engineering Specifications. The supplementary requirements include structural design requirements, fatigue analysis, thermal loads, positive material identification, fabrication tolerances, welding procedures, welder qualifications and testing records, NDE inspections and records, packaging, handling, and storage requirements. The MU is identified as Quality Level (Q) and Seismic Category (SC-III) in the Mechanical Data Sheet. The Vendor Fabrication drawings show that the Scrubber's top head and upper portion of shell subjected to low temperature are built with 316 stainless steel plate (max. 0.030% C; dual certified), hereinafter known as 316L stainless steel, whereas the bottom head and lower portion of shell subjected to high temperature are built with excellent corrosion resistant Hastelloy C-276 (ASME SB-575) (UNS N10276) plate. Other pertinent components of the units are also built of 316L materials (low temperature resistant components) or C-276 materials (high temperature resistant components) based on their location in the Scrubber. The design requirements specified in the codes and specifications are appropriate and adequate for the intended use of this MU.

	Information Assessed	Source of Information	Assessment
Design (cont'd)	If a non-standard Plant Item is to be used, the design calculations demonstrate sound engineering principles of construction.	Material Requisition, Engineering Specifications, Mechanical Data Sheet (MDS), and Drawings listed above under References; ASME Boiler and Pressure Vessel Code (B&PV), Section VIII, Division 1, Rules for Construction of Pressure Vessels, American Society of Mechanical Engineers; 24590-LAW-MVC-LVP-00003, Rev. B, LVP-SCB-00001, LAW Melters Offgas Caustic Scrubber, Stress Analysis with ANSYS (Design Calculation); 24590-QL-POA-MKAS-00003-07-00005, Rev. 00D, LAW Caustic Scrubber ASME Code Calculation (Design Calculation); 24590-WTP-MVC-50-00009, Rev. 0, LAW, BOF, and LAB Vessel Cyclic Datasheet Inputs (Design Calculation); 24590-LAW-DDC-S13T-00058, Rev. D, Anchor Bolt and Embed Design for Caustic Scrubber (LVP-SCB-00001) at El. + 49'-0" (Design Calculation).	The LAW MU (LVP-SCB-00001) in the LAW Secondary Off-gas System (LVP) is a non-standard offgas treatment assembly that is shop fabricated. The referenced Material Requisition, MDS, and Specifications require that this vessel be designed and built using ASME B & PV Code, Section VIII, Div. 1 and delivered after design, fabrication, inspection, and testing including ASME code stamp with National Board registration number. Review of the listed Analysis/Design Calculations and drawings show that appropriate applicable load cases and combinations thereof were used utilizing sound engineering principles for the design and construction of the Scrubber. Furthermore, approval and acceptance of the vendor fabrication drawings (including various applicable change notices) by Bechtel National Inc.(BNI), is an added assurance that all applicable requirements stated above and as described in documents (including daughter documents) listed in the Material Requisition for the vessel, have been met. The BNI approved and accepted change notices documents were reviewed and found to be in compliance with the applicable design requirements.

	Information Assessed	Source of Information	Assessment
Design (cont'd)	Plant Item has adequate strength, after consideration of the corrosion allowance, to withstand the operating pressure, operating temperature, and seismic loads.	Specifications, Mechanical Data Sheet, and Corrosion Evaluation listed above under References; ASME Boiler and Pressure Vessel Code (B&PV), Section VIII, Division 1, Rules for Construction of Pressure Vessels, American Society of Mechanical Engineers; ASME B31.3, Process Piping, ASME Code for Process Piping, American Society of Mechanical Engineers; 24590-LAW-MVC-LVP-00003, Rev. B, LVP-SCB-00001, LAW Melters Offgas Caustic Scrubber, Stress Analysis with ANSYS (Design Calculation); 24590-WTP-MVC-50-00009, Rev. 0, LAW, BOF, and LAB Vessel Cyclic Datasheet Inputs (Design Calculation); 24590-QL-POA-MKAS-00003-07-00005, Rev. 00D, LAW Caustic Scrubber ASME Code Calculation (Design Calculation).	The Engineering Specifications for LAW Melter Offgas Caustic Scrubber and Mechanical Data Sheet require that the Scrubber including all related components and appurtenances be designed and fabricated in accordance with the applicable sections of ASME B&PV Code, Section VIII, Division 1and ASME B31.3 Codes. These codes require specific consideration of operating pressures, temperatures, corrosion allowance, and seismic loads in the design process. The Mechanical Data Sheet identifies the operating pressure, temperature ranges, and seismic categories for the Scrubber vessel. Corrosion allowance of 0.04" is recommended for this MU vessel as identified in the Corrosion Evaluation and MDS documents. The Specification for Seismic Design of pressure vessels specifies requirements for seismic design. The representative listed Analysis/Design Calculations reviewed show that the applicable loading parameters were appropriately considered in the design process and the MU will have adequate strength to sustain them during its design life.

Information Assessed		Source of Information	Assessment
Foundation	Plant Item foundation will maintain the load of a full vessel.	Specifications and Mechanical Data Sheet listed above under references: ASME Boiler and Pressure Vessel Code (B&PV), Section VIII, Division 1, Rules for Construction of Pressure Vessels, American Society of Mechanical Engineers; 24590-WTP-DB-ENG-01-001, Rev. 2, Basis of Design; 24590-LAW-MVC-LVP-00003, Rev. B, LVP-SCB-00001, LAW Melters Offgas Caustic Scrubber, Stress Analysis with ANSYS (Design Calculation); 24590-LAW-DDC-S13T-00058, Rev. D, Anchor Bolt and Embed Design for Caustic Scrubber (LVP-SCB-00001) at El. + 49'-0" (Design Calculation).	The Engineering Specifications for LAW Melter Offgas Caustic Scrubber requires the use of ASME B&PV Code, Section VIII, Div. 1 for its design process. This code has adequate structural design requirements to ensure proper support for the MU. The Basis of Design document requires that the supports and foundations shall be designed adequately to sustain all applicable loads including the full weight of the vessel. The review of Analysis/Design Calculation documents shows that the supporting skirt and associated support components of the Scrubber have been designed adequately to handle the applicable loads. It should be noted that the evaluation of the Scrubber foundation (concrete floor slab @ Elev. 49'-0") is not in the scope of this report. However, it is covered in a separate integrity assessment report.

	Information Assessed	Source of Information	Assessment
Foundation (cont'd)	If in an area subject to flooding, the Plant Item is anchored.	Drawings, Specifications and Mechanical Data Sheet (MDS) listed above under References; 24590-LAW-PER-M-02-002, Rev. 7, Dangerous Waste Permit (DWP) Liner Heights in the LAW Facility; 24590-LAW-DDC-S13T-00058, Rev. D, Anchor Bolt and Embed Design for Caustic Scrubber (LVP-SCB-00001) at El. + 49'-0" (Design Calculation).	As shown on the referenced drawings, the Scrubber is located in Room L-0304F and mounted on the raised portion (Elev. 49'-0") of the main building Floor Elev. 48'-0" of the LAW facility. The Specification for Pressure Vessel Design and Fabrication requires that supports and anchors shall be designed to secure the buoyant vessel in case the vessel is empty and submerged to the level indicated in the MDS. The Liner Heights in the LAW Facility document describes that the 4" high concrete curbed area of Room L-0304F has an open floor drain which directs any potential leaks or spills into the RLD-VSL-00004 located at lower Floor Elev. (-) 21'-0". The drawings and MDS show that the vessel is supported on a 27" high skirt with vessel bottom head much higher than the 4" high concrete curb which contains any spillages, therefore, the buoyant force load case is not applicable for anchorage consideration. However, the Scrubber is secured to concrete slab with combination of anchor bolts and embed plates to sustain other applicable design loads including seismic forces as shown in the Anchor Bolt and Embed Design document.
	Plant Item system will withstand the effects of frost heave.	Drawings listed above under References; 24590-WTP-DC-ST-01-001, Rev. 13, Structural Design Criteria.	The Structural Design Criteria document requires that all structural foundations extend into the surrounding soil below the 30 inch frost line in order to preclude frost heave. As shown on the referenced drawings, the MU considered in this assessment is installed in the LAW facility at Floor Elev. 48'-0" which is not subject to frost heave. Therefore, the Scrubber is not subject to the frost heave effects.

	Information Assessed	Source of Information	Assessment
Waste Characteristics	Characteristics of the waste to be stored or treated have been identified (ignitable, reactive, toxic, specific gravity, vapor pressure, flash point, storage temperature)	System Description, Mechanical Data Sheet, and Corrosion Evaluation listed above under References; 24590-WTP-PER-PR-03-002, Rev. 3, Control of Toxic Vapors and Emissions from WTP Tank Systems and Miscellaneous Unit Systems; 24590-LAW-M4C-LOP-00001, Rev. 3, LAW Melter Offgas System Design Basis Flowsheets, including ECCN # 00003 and 00009; CCN 280210, LAW Miscellaneous Treatment Unit Hydrogen Accumulation Documentation for the DWP Administrative Record.	The Mechanical Data Sheet presents the operating temperatures and pressures for MU within the scope of this assessment. The Corrosion Evaluation document address the chemical composition of the offgas in order to select appropriate MU materials and specify the corrosion allowance. The System Description document identifies the offgas being handled by the MU as hazardous, but not ignitable or flammable. The main safety function of the LVP system MU is to remove toxic and hazardous gas vapors from the LAW Secondary Offgas System. The Scrubber design is required to provide an intact housing pressure boundary during normal and abnormal operations during and after design level seismic events. Waste characteristics that are hazardous, such as ignitability, reactivity, and toxicity are appropriately addressed in the Control of Toxic Vapors and Emissions, Calculation of Hydrogen Generation Rates, Melter Offgas System Design Basis Flowsheets, and CCN 280210 document. The System Description and Control of Toxic Vapors and Emissions documents describe the LAW Scrubber as part of equipment to treat offgas and that it removes acid gases such as sulfur oxide and carbon dioxide and provides cooling before sending it to the exhausters. Review of the Calculation for Hydrogen Generation Rates, Melter Offgas System Design Basis Flowsheets, and CCN 280210 documents show that this miscellaneous unit (LVP-SCB-00001) does not pose any hydrogen generation or accumulation hazard. The LAW Melter Offgas System Design Basis Flowsheets and CNN 280210 documents state that the LAW LVP MU equipment inclusive of the LVP-SCB-00001 vessel, do not pose any hydrogen accumulation hazard.

	Information Assessed	Source of Information	Assessment
Waste Characteristics (cont'd)	Plant Item is designed to store or treat the wastes with the characteristics defined above and any treatment reagents.	Corrosion Evaluation, Mechanical Data Sheet, and System Description listed above under References.	The Corrosion Evaluation document and the Mechanical Data Sheet adequately demonstrate incorporation of identified waste characteristics into the MU design. Normal and abnormal operating conditions are discussed in the System Description. Caustic solution is added as a treatment reagent prior the scrub solution being recycled back into the Scrubber vessel from the caustic collection tank (LVP-TK-00001).
Compatibility	The waste types are compatible with each other.	System Description listed above under References.	The Scrubber vessel is the final decontamination equipment in the secondary offgas treatment train to remove acidic gases such sulfur oxide and carbon dioxide prior to sending it to exhaust stack. It receives the treated offgas from the Catalytic Oxidizer/Reducer unit, which receives the offgas from the LAW melters and the process vessels to remove acid gases, and volatile organic compounds from the offgas constituents. The System Description document does not list any incompatible waste materials to be handled by the Scrubber.

	Information Assessed	Source of Information	Assessment
Compatibility (cont'd)	Plant Item material and protective coatings ensure the vessel structure is adequately protected from the corrosive effects of the waste stream and external environments (expected to not leak or fail for the design life of the system).	Corrosion Evaluation, Mechanical Data Sheet, and Specifications listed above under References.	The material selection process included internal corrosion considerations relevant to the operating conditions of the MUs included in this assessment. Based upon those considerations, 316L stainless steel materials (low temperature resistant components) and Hastelloy C-276 (UNS N10276) materials (high temperature resistant components) were chosen for the Scrubber vessel for components in direct contact with the offgas stream, as documented in the Corrosion Evaluation document. The selected materials are listed in the Mechanical Data Sheet under materials of construction. The material selections with corrosion allowances of 0.04" were based upon a design life of 40 years per the Engineering Specification for the Scrubber. External corrosion is not considered to be an issue because the LAW Secondary Offgas MUs operate in generally dry and actively ventilated conditions. In order to prevent release of any gases, the MDS shows to use Stainless Steel Spiral Wound sealant gaskets (316L SS-SP WND/Graphite Filled) at applicable flange joints. The top removable vessel head is installed using a Thermiculite 815 gasket. These gaskets are resilient to high temperatures and pressures; therefore, if exposed to the elements, they will prevent release of any gases. Additionally, the activation of fire suppression system controls will also mitigate any damaging effect on the gaskets. Therefore, the materials selected for these gaskets are adequate to provide the required leak proof service for the design life of the Scrubber.
Corrosion Allowance	Corrosion allowance is adequate for the intended service life of the Plant Item.	Corrosion Evaluation and Specifications listed above under References.	The Corrosion Evaluation document specifies a corrosion allowance of 0.04" for the Scrubber vessel. This is appropriate as the equipment operates under high and low temperature. This corrosion allowance is based upon 316L stainless steel and Hastelloy C-276 (UNS N10276) material characteristics and an intended design service life of 40 years per the Engineering Specification for the Scrubber.

	Information Assessed	Source of Information	Assessment
Pressure Controls	Pressure controls (vents and relief valves) are adequately designed to ensure pressure relief if normal operating pressures in the Plant Item are exceeded.	System Description and Drawings listed above under References.	The System Description provides a discussion of Off-Normal operations of the LAW Secondary Offgas System. The drawings show that Scrubber has an 8" diameter bottom drain to let the scrub solution freely flow into the Caustic Collection Tank (LVP-TK-00001) located at lower Floor Elev. 28'-0", preventing any over pressurization of the vessel. The pressure monitors and controls in the LVP systems ensure that the Scrubber is maintained at a negative pressure during the normal operation.

ISSUED BY
RPP-WTP PDC

R11728511

River Protection Project Waste Treatment Plant	**MECHANICAL DATA SHEET** **LAW Melter Offgas Caustic Scrubber**	**PLANT ITEM No.** **24590-LAW-MK-LVP-SCB-00001**
		Data Sheet No. / **Rev.** **24590-LAW-MKD-LVP-00011** / **6**

Project:	RPP-WTP	P&ID	Ref 1
Project No:	24590		
Site:	DOE Hanford	Process Calculations	Ref 2; Ref 3
System:	LVP		
Building:	LAW		
Description	LAW Melter Offgas Caustic Scrubber		

General Data

Quality Level	Q	Fabrication Specification	Ref 8
Seismic Category	SC-III	Design Code	ASME Section VIII Division 1
Service/Contents	Melter offgas, air, water, caustic solution	Code Stamp	Yes
Design recirc. fluid density lb/ft^3	65.8 (Ref 3)	NB Registration	Yes
Max. Operating Volume gal	150 (Note 21*)	Wind Design	N/A
Total Volume gal	4,250 *	Snow/Ash Design	N/A
Postweld Heat Treat	N/A	Equipment Qualification	Ref 11

Operating & Design Data (Ref 2, Note 3)

Inside Diameter inch	66 *	Corrosion/Erosion Allowance inch		0.040 (Ref 6; Note 23)
Length / Height inch	Note 17 *	Allowable Overall Differential Pressure (in wg)		16
	Vessel Max Operating	**Vessel Design**	**N01 Inlet Max Operating**	
Internal Pressure psig	0	15	0	
External Pressure psig	5.6 (Ref 27)	9.5 (Ref 26)	5.6 (Ref 27)	
Temperature °F	412	486 (Ref 4)	412	
Min. Design Metal Temp. °F	-20 (per ASME Section VIII Division 1)			

Materials of Construction (Ref 6)

Component	Material	Confinement
Top Head	SA-240 Type 316 (max 0.030% C; dual certified) (Note 12)	Primary (Ref 8)
Upper Shell	SA-240 Type 316 (max 0.030% C; dual certified) (Note 12)	Primary (Ref 8)
Lower Shell	UNS N10276 (Alloy C-276) (Note 12)	Primary (Ref 8)
Bottom Head	UNS N10276 (Alloy C-276) (Note 12)	Primary (Ref 8)
Vessel Supports	Note 19	N/A
Internals	UNS N10276 (Alloy C-276) / Type 316 (max 0.030% C; dual certified) (Note 12 and 20)	N/A
Pipe and nozzles	UNS N10276 (Alloy C-276) / Type 316 (max 0.030% C; dual certified) (Note 12)	Primary
Forgings / Bar stock	UNS N10276 (Alloy C-276) / Type 316 (max 0.030% C; dual certified) (Note 12)	Primary - when used for nozzles or for supports welded to the pressure boundary (Ref 8)
Gaskets for B16.5 flanges above the packing	Type 316 (max 0.030% C; dual certified) Spiral-Wound/B16.20 with graphite filler (Note 12)	Primary (Ref 8)
Gaskets for B16.5 flanges below the packing	UNS N10276 (Alloy C-276) Spiral-Wound/B16.20 with graphite filler (Note 12)	Primary (Ref 8)
Gasket for custom removable top head	Thermiculite 815	Primary (Ref 8)
Bolting for B16.5 nozzle and head flanges	SA-193, B7	N/A
Mounting base	Note 19	N/A
Packing	UNS N10276 (Alloy C-276) (notes 12 and 20)	N/A

Component	Material	Confinement
Mist Eliminator (demister) (Ref 21)	Brownian Diffusion "Flexifiber" mist eliminator (From Koch-Glitsch) Mat'l: Glass Fiber with Type 316 (max 0.030% C; dual certified) cage (Note 12)	N/A

Miscellaneous Data

Orientation	Vertical
Insulation Function	Personnel Protection (Ref 1, Ref 12, Note 6)
Insulation Thickness	4.5" (Ref 1, Ref 12)
Insulation Material	Mineral Fiber on shell, mineral fiber blanket on bottom head, and expanded perlite block or calcium silicate on top head (Ref 12 and Note 6)
External Finish	Mill finish with welds descaled and "as deposited"
Weight - *Note 1	Vessel: Dry * Vessel Operating: * Vessel Test: *
	Packing: dry * wet *
	HEME frame: * HEME filters: dry * wet *
Internal Finish	Mill finish with welds descaled and ground smooth.

Equipment Cyclic Data (Ref 13)

The information below is provisional and envelopes operational duty for fatigue assessment. It is not to be used as operational data.

Design Life	40 Years			
Component Function and Life cycle Description	Ref 14			
Load Type	**Min**	**Max**	**Number of Cycles**	**Comments**
Design Pressure psig	-9.5 (Ref 26)	15	10	
Normal Operating Press. psig	-5.6 (Ref 27)	0	100	-154 in wg = -5.6 psig
Overall Operating Temp. °F	59	412	100	
Deleted				
Deleted				
Localized Features				
Demister Wash Operating Temp. for Nozzles N51-N54 and N51A-N54A, °F	59	122	4200	
Demister Wash Operating Press. for Nozzles N51-N54 and N51A-N54A, psig	-5.6 (Ref 27)	45 (Ref 25)	4200	
Packing Wash Operating Temp. for Nozzle N06 °F	59	212*	4200	Vendor to confirm max temperature at N06 under vessel max operating conditions
Packing Wash Operating Press. for Nozzles N06, psig	-5.6 (Ref 27)	49 (Ref 25)	4200	
Cyclic Notes				
Cycle increase: The fatigue analyst shall increase the number of operational cycles given above by 10% to account for commissioning duty.				

Notes

Note 1:	An asterisk (*) indicates data to be verified and/or supplied by the Seller.
Note 2:	Deleted
Note 3:	Caustic Scrubber inlet and outlet conditions are taken from Ref 2. Stream Number LVP09 Catalyst Skid Discharge conditions are taken as scrubber inlet conditions at N01. Stream Number LVP18 Caustic Scrubber Discharge conditions are taken as scrubber outlet conditions at N02.
Note 4:	Deleted
Note 5:	Deleted
Note 6:	Personnel Protection insulation will be supplied and installed by Buyer's Subcontractor. Insulation Support Ring shall be supplied and installed by Seller. See Ref 14, Attachment A for insulation support ring details. For weight calculation purposes, a bounding insulation density can be assumed to be 15 lbs/ft^3 (Ref 12).
Note 7:	See EQ Datasheet for environmental radiation data.
Note 8:	Deleted
Note 9:	Deleted
Note 10:	Deleted
Note 11:	Deleted
Note 12:	The lower portion of the scrubber including the nozzles, internal piping, structured packing and associated hardware may be subjected to operating temperatures in excess of 200°F, but bounded by the Design Temperature of 486°F. Therefore, per Ref 6, the lower portion shall be UNS N10276 (Alloy C-276). Per Ref 21*, this higher temperature zone is considered to extend up to the top of the structured packing. The upper portion of the scrubber (above the structured packing) will be exposed to operating temperatures that are less than 200°F. Therefore, per Ref 6, Type 316 (max 0.030% C; dual certified) stainless steel is acceptable for the remainder of the scrubber and internal components. Per Ref 2, normal and max operating temperatures above the packing are 122°F.
Note 13:	For the purpose of design, fabrication and NDE per Ref 8, the design level of this vessel is L-1.
Note 14.	Contents of this document are Dangerous Waste Permit Affecting.
Note 15.	Deleted
Note 16.	Deleted.
Note 17.	Seller to provide new overall height resulting from removable head design.
Note 18.	All nozzle loads to be applied shall conform to the Nozzle Loads table provided in this datasheet. Note that these nozzle loads are contingent upon using an expansion joint on the N01 scrubber inlet nozzle and the N02 scrubber outlet nozzle (Ref 7). Do not apply nozzle loads to manways. Spares do require nozzle load application. Note: *V= vertical head nozzle - values are x = North/South, y = vertical, z = East/West (global coordinates), Vessel 0 deg defined as north **H = horizontal shell nozzle - values are per axes shown in Ref 8, Appendix A (local coordinates)
Note 19.	The vessel support system shall be designed by the Seller in accordance with ASME Section VIII, Division 1. Material of construction shall be Type 316 (max 0.030% C; dual certified) stainless steel. The following requirements shall apply if the Seller opts to use "skirt" type design: Material of construction shall be Type 316 (max 0.030% C; dual certified) stainless steel unless determined to be unacceptable due to excessive thermal stresses at the skirt-to-vessel junction. In such case, the skirt support material shall be UNS N10276

	(Alloy C-276). Anchorage of support skirt/base ring assembly to facility floor shall be achieved by anchor bolts and anchor bolt chairs. See Equipment Specification (Ref 14) for further details. The skirt type vessel support shall be provided with two (2) 10" NPS inspection openings 90 degrees apart. Drainage shall be provided through vessel support mechanism **or through grooves cut into the floor underneath the scrubber.** Location of drainage holes to be at 90 degree angles and 1 square inch in area each. Drainage shall be at the floor interface. Inspection holes and drainage holes shall be located so that they do not interfere with the vessel mounting or the shear bars detailed in Ref 14.
Note 20.	The internal packing shall be designed to allow for replacement. Inspection access shall be provided through the 24 inch manway located in the vessel shell.
Note 21.	Max. operating volume is based on max. liquid height being at the bottom of offgas inlet nozzle N01.
Note 22.	Deleted
Note 23.	a. 0.040" corrosion allowance applies to surfaces wetted by process fluid, except for internal packing and mist eliminator filters. b. The Corrosion Evaluation (Ref 6) says that the packing and mist eliminator are considered consumable so no corrosion allowance is required. • The performance of the mist eliminator filters will be monitored during operation and are expected to require maintenance and replacement during the 40-year life of the plant. • The packing will be monitored during operation, and will potentially need replacement during the 40-year life of the plant. For the mist eliminator filters and the packing Seller shall: • provide a design that is accessible for maintenance and replacement • identify parameter(s) to be monitored that indicate need for maintenance and replacement • provide maintenance and replacement instructions This method of addressing corrosion provides no quantitative margin on material wear, but performance/condition monitoring is relied upon to indicate need for replacement to avoid impacting the safety functions identified on the Equipment Qualification Datasheet (Ref 11).

Please note that source, special nuclear, and byproduct materials, as defined in the Atomic Energy Act of 1954 (AEA) are regulated at the U. S. Department of Energy (DOE) facilities exclusively by DOE acting pursuant to its AEA authority. DOE asserts that pursuant to AEA, it has sole and exclusive responsibility and authority to regulate source, special nuclear, and byproduct materials at DOE-owned nuclear facilities. Information contained herein on radionuclides is provided for process description purposes only.

LAW Melter Offgas Caustic Scrubber

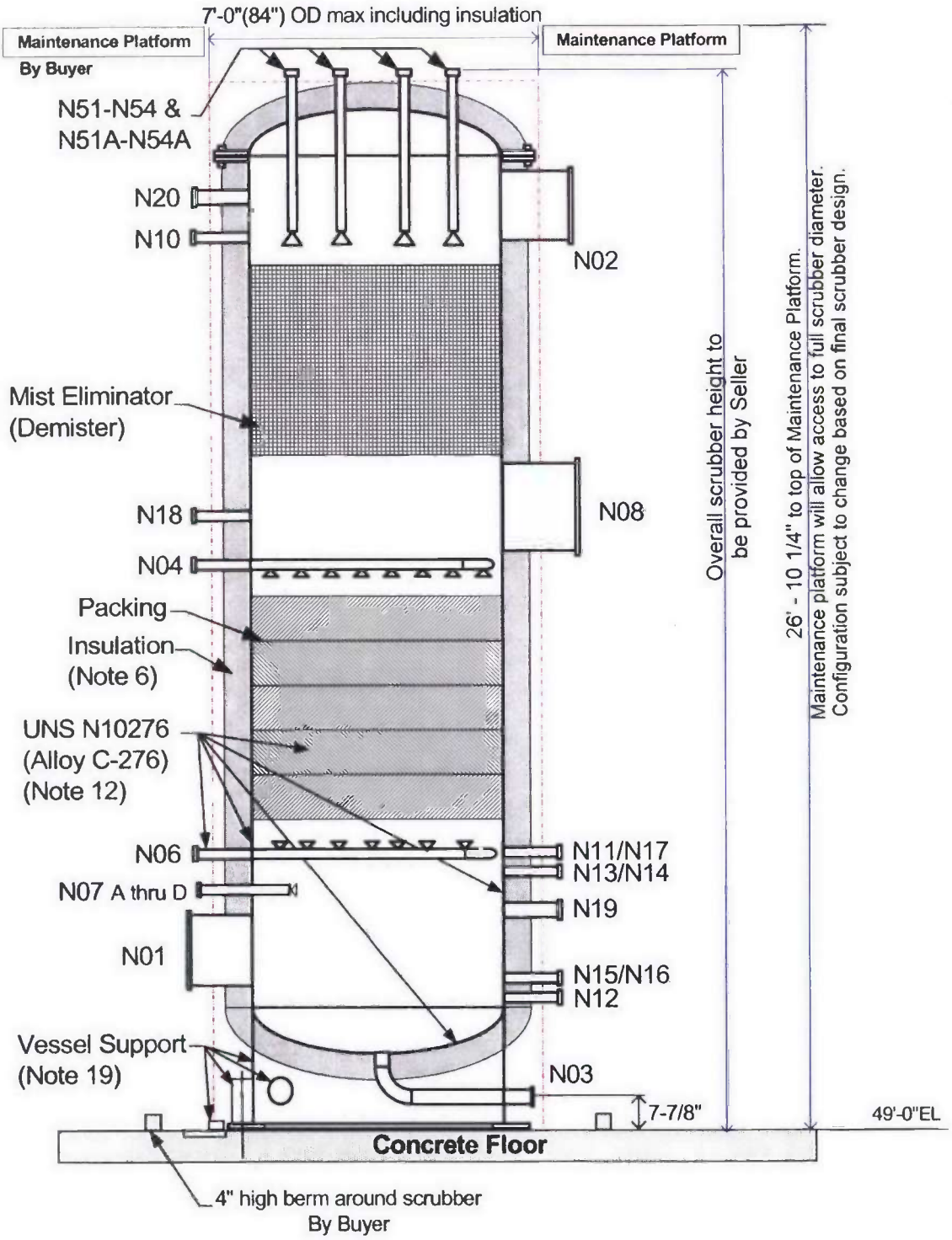

Nozzle Schedule

Nozzle	Service / Remark	Nominal Pipe Size (in) *	Sch	Type	Facing	Angular Location (degrees) *	Nozzle Elevation (in) *
N01	Offgas Inlet	18	(*)	Horizontal	RF-WN	0	41.5
N02	Offgas Outlet	18	(*)	Horizontal	RF-WN	90	289.5
N03	Caustic Solution Return to Collection Tank / Scrubber Drain (Condensate Discharge)	8	(*)	Vertical	RF-WN	315	7.875
N04	Caustic Solution Supply (Condensate Recirculation)	3	(*)	Horizontal	RF-WN	90	142.25
N05A/ B	Deleted due to removable internals design; new configuration is N51/A - N54/A	-	-	-	-	-	-
N06	Packing Bottom Wash	2	(*)	Horizontal	RF-WN	270	65.5
N07A	Replaceable Quenching Offgas Spray Nozzle	3	(*)	Horizontal	RF-WN	330	41.5
N07B	Replaceable Quenching Offgas Spray Nozzle	3	(*)	Horizontal	RF-WN	345	63.66
N07C	Replaceable Quenching Offgas Spray Nozzle	3	(*)	Horizontal	RF-WN	15	63.66
N07D	Replaceable Quenching Offgas Spray Nozzle	3	(*)	Horizontal	RF-WN	30	41.5
N08	Manway	24	(*)	Horizontal	RF-WN	180	152.75
N09	Deleted	-	-	-	-	-	-
N10	Pressure Differential Transmitter across packing & demister (See Ref 15, Detail 8)	2	(*)	Horizontal	RF-WN	0	289.5
N11	Pressure Differential Transmitter across packing & demister (See Ref 15, Detail 8)	2	(*)	Horizontal	RF-WN	67.5	65.5
N12	Offgas Outlet Condensate Return to Scrubber	2	(*)	Horizontal	RF-WN	67.5	41.5
N13	Spare (Future) Level Transmitter (See Detail 8 of Ref 15), with blind flange, gaskets and bolts	2	(*)	Horizontal	RF-WN	202.5	65.5
N14	Level Transmitter (See Detail 8 of Ref 15)	2	(*)	Horizontal	RF-WN	90	65.5
N15	Spare (Future) Level Transmitter (See Detail 8 of Ref 15), with blind flange, gaskets and bolts	2	(*)	Horizontal	RF-WN	202.5	34.38
N16	Level Transmitter (See Detail 8 of Ref 15)	2	(*)	Horizontal	RF-WN	90	34.38
N17	Pressure Differential Transmitter (See Detail 8 of Ref 15) for Packing	2	(*)	Horizontal	RF-WN	315	65.5

Nozzle	Service / Remark	Nominal Pipe Size (in) *	Sch	Type	Facing	Angular Location (degrees) *	Nozzle Elevation (in) *
N18	Pressure Differential Transmitter (See Detail 8 of Ref 15) for Packing	2	(*)	Horizontal	RF-WN	315	142.25
N19	Spare with blind flange, gaskets and bolts	3	(*)	Horizontal	RF-WN	150	41.5
N20	Spare with blind flange, gaskets and bolts	3	(*)	Horizontal	RF-WN	180	289.5
N21	Deleted due to removable top head	-	-	-	-	-	-
N51	Demister Wash Nozzles at Vessel Interface	1.5	(*)	Vertical	RF-WN	0	332.47
N52	Demister Wash Nozzles at Vessel Interface	1.5	(*)	Vertical	RF-WN	90	332.47
N53	Demister Wash Nozzles at Vessel Interface	1.5	(*)	Vertical	RF-WN	180	332.47
N54	Demister Wash Nozzles at Vessel Interface	1.5	(*)	Vertical	RF-WN	270	332.47
N51A	Demister Wash Nozzle Spray Lances at Process Service Water Interface	3/4	(*)	Vertical	RF-WN	0	339.47
N52A	Demister Wash Nozzle Spray Lances at Process Service Water Interface	3/4	(*)	Vertical	RF-WN	90	339.47
N53A	Demister Wash Nozzle Spray Lances at Process Service Water Interface	3/4	(*)	Vertical	RF-WN	180	339.47
N54A	Demister Wash Nozzle Spray Lances at Process Service Water Interface	3/4	(*)	Vertical	RF-WN	270	339.47

Nozzle Schedule Notes:

1. Seller shall confirm size, schedule, angular location, and nozzle elevation of all nozzles.
2. Nozzle requirements are as follows:

   N02 - shall extend 6 inches beyond the insulation surface

   N06 - shall extend 8 inches beyond the insulation surface

   Nozzles over 12 inches (excluding N02 and N08) shall extend 12 inches beyond the insulation surface. N08 shall extend 9 inches beyond the insulation surface.

   Detail design requirements are as stated in Ref 15, Ref 16, and Ref 17.
3. (*) Nozzle Schedule shall be determined by Seller, taking into consideration all requirements stated in Ref 8.

Nozzle Loads (Ref 7, Note 18)

Nozzle	Load Type	Nozzle Loads for LVP-SCB-00001					
		Loads - lbs			Moments - ft-lbs		
		Fx	Fy	Fz	Mx	My	Mz
N01	Weight	500	1200	500	2000	3000	3000
	Seismic	6500	2500	2500	4000	3000	3000
	Thermal	6000	2000	2000	10000	3000	3000
N02	Weight	500	1200	500	2000	3000	3000
	Seismic	3000	2500	2500	10000	10000	10000
	Thermal	3000	2000	2000	3000	3000	3000
N03	Weight	333	534	333	1210	758	758
	Seismic	1180	790	1180	3567	5333	5333
	Thermal	1050	938	1410	1600	3197	3197
N04	Weight	47	85	47	117	73	73
	Seismic	420	400	420	1021	1528	1528
	Thermal	136	121	181	432	865	865
N06	Weight	34	56	34	46	29	29
	Seismic	244	162	244	398	597	597
	Thermal	104	92	138	169	337	337
N08 (Manway)	Weight	0	0	0	0	0	0
	Seismic	0	0	0	0	0	0
	Thermal	0	0	0	0	0	0
N10	Weight	28	45	28	40	35	35
	Seismic	196	130	196	319	478	478
	Thermal	84	74	111	136	270	270
N11	Weight	34	56	34	46	29	29
	Seismic	244	162	244	398	597	597
	Thermal	104	92	138	169	337	337
N12	Weight	34	56	34	46	29	29
	Seismic	244	162	244	398	597	597
	Thermal	104	92	138	169	337	337
N13	Weight	34	56	34	46	29	29
	Seismic	244	162	244	398	597	597
	Thermal	104	92	138	169	337	337
N14	Weight	34	56	34	46	29	29
	Seismic	244	162	244	398	597	597
	Thermal	104	92	138	169	337	337
N15	Weight	34	56	34	46	29	29
	Seismic	244	162	244	398	597	597
	Thermal	104	92	138	169	337	337
N16	Weight	34	56	34	46	29	29
	Seismic	244	162	244	398	597	597
	Thermal	104	92	138	169	337	337
N17	Weight	34	56	34	46	29	29
	Seismic	244	162	244	398	597	597
	Thermal	104	92	138	169	337	337
N18	Weight	28	45	28	40	35	35
	Seismic	196	130	196	319	478	478
	Thermal	84	74	111	136	270	270
N19	Weight	71	113	71	180	112	112
	Seismic	491	327	491	1570	2350	2350
	Thermal	209	185	278	664	1330	1330

Nozzle	Load Type	Nozzle Loads for LVP-SCB-00001					
		Loads - lbs			Moments - ft-lbs		
		Fx	Fy	Fz	Mx	My	Mz
N20	Weight	54	85	54	135	84	84
	Seismic	420	260	420	1178	1763	1763
	Thermal	157	139	209	498	998	998

Nozzle	Load Type	Nozzle Loads for LVP-SCB-00001			
		Loads - lbs		Moments - ft-lbs	
		Axial	Resultant Lateral	Torsion	Resultant Bending
N07A	Normal (Weight + Thermal)	75	50	25	40
	Occasional (Weight + Thermal + Seismic)	100	100	65	75
N07B	Normal (Weight + Thermal)	75	50	25	40
	Occasional (Weight + Thermal + Seismic)	100	100	65	75
N07C	Normal (Weight + Thermal)	75	50	25	40
	Occasional (Weight + Thermal + Seismic)	100	100	65	75
N07D	Normal (Weight + Thermal)	75	50	25	40
	Occasional (Weight + Thermal + Seismic)	100	100	65	75
N51A	Normal (Weight + Thermal)	75	30	20	25
	Occasional (Weight + Thermal + Seismic)	185	120	40	85
N52A	Normal (Weight + Thermal)	75	30	20	25
	Occasional (Weight + Thermal + Seismic)	185	120	40	85
N53A	Normal (Weight + Thermal)	75	30	20	25
	Occasional (Weight + Thermal + Seismic)	185	120	40	85
N54A	Normal (Weight + Thermal)	75	30	20	25
	Occasional (Weight + Thermal + Seismic)	185	120	40	85

River Protection Project Waste Treatment Plant	MECHANICAL DATA SHEET LAW Melter Offgas Caustic Scrubber	PLANT ITEM No. 24590-LAW-MK-LVP-SCB-00001	
		Data Sheet No.	Rev.
		24590-LAW-MKD-LVP-00011	6

Process Conditions (Ref 2 unless noted otherwise)				
Process Condition	Operating			Remarks
	Unit	Normal	Max.	
INLET OFFGAS, Nozzle N01				
Flow Type		Continuous	Continuous	
Phase		Gas	Gas	
Actual Flowrate	ACFM	8322	9803	
Temperature	°F	370	412	
Pressure	Inches water gage	-111	-135	-135 in wg = -4.9 psig
Volumetric Process Concentration				
N_2	Vol %	70	70	
O_2	Vol %	18	18	
H_2O	Vol %	10	11	
CO_2	Vol %	1	1	
Ar	Vol %	1	1	
Process Concentration				
Organic	lb/hr	6.20E-02	1.29E-01	
H_2O	lb/hr	1.03E+03	1.17E+03	
CO	lb/hr	3.50E-01	1.20E+00	
CO_2	lb/hr	2.94E+02	3.71E+02	Ref 29
HCl	lb/hr	1.49E-02	1.89E-02	Ref 29
HF	lb/hr	2.92E-03	7.37E-03	Ref 29
NH_3	ppmv	251	339	Ref 29
NO	lb/hr	6.58E-01	9.35E-01	
NO_2	lb/hr	8.73E-01	1.73E+00	
SO_2	lb/hr	6.95E-02	1.35E-01	
SO_3	lb/hr	1.39E-05	1.57E-05	Ref 29
OUTLET OFFGAS, Nozzle N02				
Flow Type		Continuous	Continuous	
Phase		Gas	Gas	
Actual Flow rate	ACFM	6894	8156	
Temperature	°F	122	122	
Pressure	Inches water gage	-124	-154 (Ref 27)	-154 in wg = -5.6 psig
CONDENSATE DISCHARGE, Nozzle N03				
Flow Type		Continuous	Continuous	
Phase		Liquid	Liquid	
Actual Flow rate (note 7)	gal /min	200	200	
Pressure	Inches water gage	-111	-135	
Viscosity	cP	0.43	0.43	
pH (note 7)				

River Protection Project Waste Treatment Plant	MECHANICAL DATA SHEET LAW Melter Offgas Caustic Scrubber	PLANT ITEM No. 24590-LAW-MK-LVP-SCB-00001	
		Data Sheet No. 24590-LAW-MKD-LVP-00011	Rev. 6

Process Conditions (Ref 2 unless noted otherwise)				
Process Condition	Operating			Remarks
	Unit	Normal	Max.	
CONDENSATE RECIRCULATION, Nozzle N04				
Flow Type		Continuous	Continuous	
Phase		Liquid	Liquid	
Actual Flow rate (note 7)	gal/min	200	200	
Temperature	°F	122	122	Equilibrium with outlet offgas
Pressure	psig	44	44	
Viscosity	cP	0.43	0.43	
pH (note 7)				
QUENCH INLET SPRAY, Nozzles N07A thru D (note 5)				
Actual Flow rate (liquid) per nozzle (note 7)	gal/min	1.5	2.2	
Liquid pressure (at vessel nozzle) (note 7)	psig	58	58	Ref 25
PSW wash supply temperature	°F	60	60	Ref 28
Actual Flow rate (air) per spray nozzle (note 7)	std ft^3/min	26	36	
Air pressure (at vessel nozzle) (note 7)	psig	60	60	
Demister Wash, Nozzles N51-N54 & N51A-N54A				
Wash Frequency (note 7)	Weeks	1	1	
Wash Duration (note 7)	Minutes	5	5	
Wash Flow Rate, per spray nozzle (note 7)	gal/min	4	4	
Wash Supply Press., at vessel nozzle (note 7)	psig	40	45	Ref 25
PSW wash supply temperature	°F	60	60	Ref 28
Packing Wash Lower, Nozzle N06				
Wash Frequency (note 7)	Weeks	1	1	
Wash Duration (note 7)	Minutes	5	5	
Wash Flow Rate, per spray nozzle (note 7)	gal/min	4	4	
Wash Supply Pressure, at vessel nozzle (note7)	psig	40	49	Ref 25
PSW wash supply temperature	°F	60	60	Ref 28

Design	Unit	Criteria
Design Basis minimum removal efficiency	%	97 (Ref 14)
Design Basis Component		SOx (SO_2 + SO_3)
Maximum Flooding	%	60 (Ref 14)
Packing Height Contingency	%	10

PROCESS WATER (PSW)			
PSW Source	Domestic water (DOW) provided by DOE. (Ref 19)		
Water Quality Summary: (Ref 20)			
Constituents -	Annual Average Value -	Seasonal / Design Average Value -	Units -
Carbon tetrachloride	< 1	N/A	µg/L
Methylene chloride	< 1	N/A	µg/L
Bromoform	< 0.5	< 0.5	µg/L
Bromodichloromethane	2.1	3.3	µg/L
Chloroform	37	61	µg/L
Dibromochloromethane	< 0.5	< 0.5	µg/L
Total trihalomethanes	43	65	µg/L
Bis(2-ethylhexyl) phthalate	< 1	N/A	µg/L
Metals -			
Arsenic	0.58	N/A	µg/L
Cadmium	0.026	N/A	µg/L
Chromium	0.12	N/A	µg/L
Lead	0.048	N/A	µg/L
Mercury	0.00033	N/A	µg/L
Iron	20	N/A	µg/L
Manganese	< 10	N/A	µg/L
Anions -			
Chloride	3.4	N/A	mg/L
Nitrate	0.11	0.14	mg/L as N
Sulfate	26	N/A	mg/L
Other Analyses -			
Total Dissolved Solids	100	120	mg/L
pH	7.0	N/A	S.U.
Radionuclides -			
Gross Alpha	0.51	N/A	pCi/L
Gross Beta	0.49	N/A	pCi/L
Tritium	154.7	N/A	pCi/L

Process Condition Notes:

(1). Deleted
(2). Deleted
(3). Deleted
(4). Deleted
(5). Cooling duty from vaporization of process service water sprayed into scrubber column.
(6). Deleted
(7). Supplier to verify or supply for operating conditions.

River Protection Project Waste Treatment Plant	MECHANICAL DATA SHEET **LAW Melter Offgas Caustic Scrubber**	PLANT ITEM No. 24590-LAW-MK-LVP-SCB-00001	
		Data Sheet No.	Rev.
		24590-LAW-MKD-LVP-00011	6

Approvals

Rev	Description	System Engr	Vessel Engr	Checked	Approved	Date
6	**The purpose of this revision is to update the revision of Ref 6 Corrosion Evaluation to support IQRPE. Other reference revisions are updated also. Incorporated SDDR 24590-WTP-SDDR-MS-15-00008 via change to Note 19. Changes to nozzle loads and nozzle elevations on this MDS rev have already been analyzed in the structural/seismic analysis, therefore this datasheet revision does not impact margin.**	**Mike O'Neill**	**Cathy Christianson**	**Jim Marsh**	**Prabhu Rajagopalan**	7/30/2015

Approvals

Safety Screening / Evaluation Required? If yes per 24590-WTP-GPP-SREG-002, E&NS signature required below.						Yes X	No
Rev	Description	System Engr	Vessel Engr	Checked	E&NS	Approved	Date
5	Revised Vessel Max Operating Temperature to align with Design Basis Flowsheet and not take credit for quenching or caustic recirculation affects on temperature; revised cyclic data; revised Notes; updated References; used PIBOD values where bounding to Ref 2 flowsheet values for offgas constituents; misc clarification changes. Changes that impact margin are addressed in calculations 24590-LAW-MEC-LVP-00003 Rev 1 and 24590-LAW-MKC-LVP-00004 Rev 1.	M. O'Neill	Cathy Cory AC	Paul Meeuwsen	J. Hinckley	Dan Cragin for P. Omel	9/25/13
4	Incorporate TCNs 24590-QL-MRA-MKAS-00003-T0009 and -T0010 - no rev bars shown. Rev bars shown for other changes: updated pressures & temperatures; updated insulation, nozzle locations, and diagram per DCN 24590-LAW-M6N-LVP-00092; added material requirement for top head gasket; updated bolting material for nozzle and top head flanges; updated cyclic data per ECCN 24590-WTP-MVE-50-00012; updated notes.	M. O'Neill	C. Cory	J. Marsh	D. Krahn	P. Omel	8/7/13

3	Incorporate TCNs 24590-QL-MRA-MKAS-00003-T0001, -T0003, -T0004, and -T0008 - no rev bars shown. Rev bars shown for all other changes: added Attachment 1 for References; revised corrosion allowance for internal components; clarified material req'd for lower section gaskets; updated cyclic data; revised Notes; updated sketch; revised service description of some nozzles; updated process conditions.	M. O'Neill	C. Priest	R. Flieger	D. Krahn	D. Mildon	9/26/12
2	Extensive revisions to Design, Operating and Process specifications per revised LAW Melter Offgas System Design Basis Flowsheets calc 24590-LAW-M4C-LOP-00001, Rev 2A. No change bars or revision triangles used to identify changes.	M. O'Neill	J. Czarnecki	Ray Peters	D. Krahn	J. Julyk	12/22/09
1	The data sheet was generally revised and up dated to incorporate information provided by the supplier. New information added: Equipment support changed to Leg Design, Ap= 2.5 for seismic design, nozzle loads, equipment cyclic data, caustic scrubber outline updated to add maint platform and upper lateral restraint, removed the embed layout arrangement, and added HEME & Packing wash.	P. Martinelli	D. Rickettson	D. Reinemann	D. Krahn	J. Julyk	5/10/07
0	Revised design temperature, pressure drop and process requirements.	S. Sourani	D. Pease	S. Sweeney	N/A	M. Hoffmann	3/17/05

Attachment 1 - References for Mechanical Datasheet 24590-LAW-MKD-LVP-00011 Rev 6 (for internal reference)

Ref#	Document number	Doc rev	Document Title
1	24590-LAW-M6-LVP-00002002	0	P&ID-LAW - LAW Secondary Offgas / Vessel Vent Process System Caustic Scrubber LVP-SCB-00001
2	24590-LAW-M4C-LOP-00001	3	LAW Melter Offgas System Design Basis Flowsheets
3	24590-WTP-DB-PET-09-001	1	Process Inputs Basis of Design, page B-22, stream LVP17
4	24590-LAW-MEC-LVP-00003	1	Design Pressure and Design Temperature Calculation for LVP System
5	24590-WTP-GPG-M-050	2A	Pressure Vessel and Heat Exchanger Design
6	24590-LAW-N1D-LVP-00001	7	LVP-SCB-00001 - Corrosion Evaluation
7	CCN 263548	NA	Nozzle Design Loads for LAW LVP-SCB-00001 (This CCN Supersedes CCN 261004)
8	24590-WTP-3PS-MV00-T0001	4	Engineering Specification for Pressure Vessel Design and Fabrication
9	24590-WTP-3PS-MV00-T0002	3	Engineering Specification for Seismic Qualification Criteria for Pressure Vessels
10	24590-WTP-3PS-FB01-T0001	5	Engineering Specification for Structural Design Loads for Seismic Category III & IV Equipment and Tanks
11	24590-LAW-MKQ-LVP-00001	1	Equipment Qualification Datasheet for LAW Melters Offgas Caustic Scrubber
12	24590-WTP-3PS-NN00-T0001	3	Thermal Insulation for Mechanical Systems
13	24590-WTP-MVC-50-00009	0	LAB, BOF, and LAW Vessel Cyclic Datasheet Inputs
14	24590-LAW-3PS-MKAS-T0001	2	Engineering Specification for LAW Melter Offgas Caustic Scrubber
15	24590-WTP-MV-M59T-00016001	3	Vessel Connections Standard Details Sheet 1 of 3
16	24590-WTP-MV-M59T-00016002	2	Vessel Connections Standard Details Sheet 2 of 3
17	24590-WTP-MV-M59T-00016003	1	Vessel Connections Standard Details Sheet 3 of 3
18	Deleted		
19	24590-WTP-DB-ENG-01-001	002	Basis of Design
20	CCN 075108	NA	Potable Water Quality for NLD Effluent Characterization
21	24590-QL-POA-MKAS-00003-06-00001	00E	Calculation - LAW Melter Offgas Caustic Scrubber Process
22	Deleted		
23	Deleted		
24	Deleted		
25	24590-LAW-M6C-PSW-00001	1	LAW Process Service Water Distribution Line Calculation
26	24590-LAW-MKC-LVP-00004	1	LAW Caustic Scrubber Process Operating Conditions and Design Requirements
27	24590-LAW-M6C-LVP-00004	1	Offgas Pipe and Exhauster Sizing for LOP and LVP Systems
28	24590-BOF-M6C-PSW-00002	1	BOF PSW Design Pressure/Temperature Calculations for Pipeline and Valve List Support
29	24590-WTP-M4C-V11T-00012	2	Calculation of Process Stream Properties for the WTP, Attachment C

15-ECD-0043

Drawings:

C2609-M-100-1
C2609-M-100-2
C2609-M-100-3

have been scanned as separate attachment(s) due to size and printing capabilities.

CORROSION EVALUATION

ISSUED BY
RPP-WTP PDC

LVP-SCB-00001
LAW Melter Offgas Caustic Scrubber

Contents of this document are Dangerous Waste Permit Affecting

Results

Materials Considered

Materials Considered (UNS No.)	Acceptable Materials
Type 304L (S30403)	
Type 316L (S31603)	X (temp less than 200 °F)
Al-6XN® 6% Mo (N08367)	X
Hastelloy® C-22® (N06022)	X (temp above 200 °F)
Hastelloy® C-276 (UNS N10276)	X (temp above 200 °F)

Recommended Material Types:

Top head/Upper shell – Type 316 (max 0.030% C; dual certified)

Lower shell/Bottom head – Hastelloy® C-276 (UNS N10276) or Hastelloy® C-22® (UNS N06022)

Nozzles (high temp region) – Hastelloy® C-276 (UNS N10276) or Hastelloy® C-22® (UNS N06022)

Internal hardware – Type 316 (max 0.030% C; dual certified) above the packing; Hastelloy® C-276 or C-22® in or below the packing (temp greater than 200 °F)

Packing – Higher alloy materials are recommended for packing to increase the period between replacement (Hastelloy® C-276 or C-22®)

Mist eliminators (demisters) – The unit contains non-metallic mist eliminators. The fiber media will be selected to provide longevity, optimal operation, and maximum efficiency. The mist eliminators will be monitored during operation and are expected to require maintenance and replacement during the 40-year life of the plant.

The scrubber has a high temperature (higher than 200 °F) region in or below the packing and a lower temperature region above the packing. At a minimum either Hastelloy® C-276 or C-22® is recommended for the high temperature region. Type 316 (max 0.030% C; dual certified) is recommended for the lower temperature region.

Minimum Corrosion Allowance:

Vessel - 0.040 inch (includes 0.024 inch corrosion and 0.004 inch erosion allowance)
Internal hardware - 0.040 inch (includes 0.024 inch corrosion and 0.004 inch erosion allowance)
Packing & mist eliminator–Packing and mist eliminator are considered consumable and are designed to be replaced so no corrosion allowance is required.

Inputs and References

- Operating Temperature, gaseous (°F) (max/nom): 412/370 (24590-LAW-M4C-LOP-00001)
- Operating Temperature, aqueous (°F) (max/nom): 122 (24590-LAW-M4C-LOP-00001)
- Vessel general corrosion allowance (inch): 0.024 (24590-WTP-RPT-M-04-0008)
- Vessel general erosion allowance (inch): 0.004 (24590-WTP-M0C-50-00004)
- Consumable internals general corrosion allowance: None required (24590-WTP-GPG-M-047)
- Location: Room L-0304F; out cell (24590-LAW-P1-P01T-00005)
- Operating conditions are as stated in applicable section of the Process Corrosion Data report (24590-WTP-RPT-PR-04-0001-04)

REV	DATE	REASON FOR REVISION	ORIGINATE	CHECK	REVIEW	APPROVE
7	07/30/15.	Modifications to text throughout to amplify material selection discussion. Modified Corrosion/Erosion Detailed Discussion section to better describe component and operations. Removed "Internal Housing" CA. Removed items under "Assumptions. Added design limit table for alloys C-22 and C-276. Expand material selection information and references to address ORP and Ecology comments. No modifications to recommended material; no change to margin.	DLAdler	TRangus (Checked By: A. Rangus - aprangus Org Name: Bechtel Placed: Jul 30, 2015, 12:28 pm)	RBDavis	J.S.LEAM. ~~TErwin~~ JSL 07.3.15

CORROSION EVALUATION

Assumptions and Supporting Justifications (see References, Section 19)

- Operating conditions presented on the PCDS are conservative with respect to corrosion.[11]
- The PCDS states that the scrubber solution pH can be raised to 14 when high halide concentrations are measured in the scrubber bottom (Ref. 11, Section 6.6.3.1.14 included on page 13 of this document). While operating at pH 14 would not be deleterious to the scrubber materials of construction, such operations would significantly reduce the efficiency of the operations of the scrubber.[5] This statement will be removed from the PCDS at the next revision.
- The scrubber has provisions for process water addition during startup and to provide makeup water as necessary. A spray wash nozzle is also provided for wash down during maintenance periods.

Operating Restrictions

- To protect against localized corrosion in the vessel and transfer piping, develop procedure to bring the vessel aqueous contents within the limits defined for Type 316L in 24590-WTP-RPT-M-11-002, *WTP Materials Localized Corrosion Design Limits,* in the event that sampling indicates that temperature, pH, or chloride concentration exceeds those limits.
- Develop a work process to control, at a minimum, cleaning, rinsing, and flushing of vessel and internals, as applicable.
- Develop work process to control lay-up and storage; including during plant startup and during periods while the component is not in use once plant is operational.
- Procedures and work processes are to be reviewed and accepted by MET prior to use.

Concurrence KG
Operations

REVISION HISTORY

REV	DATE	REASON FOR REVISION	PREPARER	CHECKER	MET	APPROVER
6	4/28/15	Complete re-write; no rev bars shown New format Incorporate revised PCDS Update references	DLAdler	TRangus	RBDavis	TErwin
5	9/25/13	Incorporate revised design temperature/pressure Incorporate revised PCDS Editorial changes Changes do not reduce margin	DLAdler	RBDavis	NA	MWHoffmann
4	9/25/12	Incorporate revised PCDS Identify internals CA Extensive re-write; no rev bars shown Addt'l Ops Limitation AEA Notice Update references	DLAdler	RBDavis	NA	DJWilsey
3	8/31/06	Update design temperature based on revised Mechanical Data Sheet Revise to require either Hastelloy C-276, or C-22, in place of Inconel 600 with stress relief heat treatment Remove section p Update wear allowance based on 24590-WTP-RPT-04-0008	DLAdler	HMKrafft	NA	SWVail
2	6/24/04	Incorporate new PCDS Clarify material recommendations for nozzles New section p – Inadvertent Addition of Nitric Acid	DLAdler	JRDivine	NA	APRangus
1	3/22/04	Update vessel description Update design temp/pressure Include material recommendation for nozzles and interior Remove reference to open issues Add DWP note	DLAdler	JRDivine	APR	APRangus
0	3/6/02	Initial Issue	JRDivine	DLAdler	NA	SMKirk

Please note that source, special nuclear and byproduct materials, as defined in the Atomic Energy Act of 1954 (AEA), are regulated at the U.S. Department of Energy (DOE) facilities exclusively by DOE acting pursuant to its AEA authority. DOE asserts, that pursuant to the AEA, it has sole and exclusive responsibility and authority to regulate source, special nuclear, and byproduct materials at DOE-owned nuclear facilities. Information contained herein on radionuclides is provided for process description purposes only.

This bound document contains a total of 15 sheets.

CORROSION EVALUATION

Corrosion/Erosion Detailed Discussion

The LAW Melters Offgas Caustic Scrubber is the final offgas abatement equipment in the secondary offgas treatment system. At this point in the process, the offgas is relatively clean as it has been processed through several stages of chemical and radiological abatement. In the Caustic Scrubber, high temperature offgas enters the scrubber near the bottom of the vessel. Four spray lances atomize water and spray it into the path of the incoming hot offgas. The majority of this spray is evaporated as it cools the incoming offgas. The offgas then flows vertically up through the vessel, through packing and mist eliminators, to the discharge near the top of the vessel. Countercurrent to this offgas flow, a high flow of scrubber solution is introduced above the vessel packing. This solution is broken into droplets that "rain" down through the packing, to the bottom of the scrubber. The countercurrent scrubber solution flow provides additional cooling and removes additional acid gasses that may be present in the offgas stream. The aggressive constituents of concern are chlorides, fluorides, and SOx. The pH of the caustic solution will be maintained nominally at 9.5 through the addition of sodium hydroxide. The corrosion evaluation assumes all surfaces are wetted and that the scrubber solution flows through the packing, including the vessel side walls, to the bottom drain nozzle and out to the collection vessel for caustic addition prior to being pumped back into the scrubber above the packing.

Although rough estimates indicate the concentrations are well within the ability of the austenitic stainless steels, a high nickel alloy is recommended for the packing. The packing and the mist eliminator are designed to be periodically washed with water and ultimately replaced when the performance becomes degraded and cleaning is no longer effective. No corrosion allowance is required for the packing and mist eliminator (24590-WTP-GPG-M-047, *Design Guide: Preparation of Corrosion Evaluations*). The gas stream is not expected to contain solids, so sediment is not expected to accumulate on the bottom.

The evaluation of the upper portion of the scrubber is based on the temperature of the recirculated scrubber solution, 122 °F. According to the Mechanical Datasheet, 24590-LAW-MKD-LVP-00011, the temperature at Nozzle N06, the packing wash inlet, is expected to have a maximum temperature of 212 °F. It should be noted that the maximum temperature of the process service water received at N06 is 95 °F (24590-LAW-M6WX-LVP-00002002, *MS Line List for P&ID 24590-LAW-M6-LVP-00002002*).

1 General/Uniform Corrosion Analysis

a Background

General corrosion or uniform corrosion is corrosion that is distributed more-or-less uniformly over the surface of a material without appreciable localization. This leads to relatively uniform thinning on sheet and plate materials and general thinning on one side or the other (or both) for pipe and tubing. It is recognized by a roughening of the surface and usually by the presence of corrosion products. The mechanism of the attack typically is an electrochemical process that takes place at the surface of the material. Differences in composition or orientation between small areas on the metal surface create anodes and cathodes that facilitate the corrosion process.

b Component-Specific Discussion

The scrubber is exposed to one offgas stream (LVP09) and one main fluid stream (LVP17) during normal operations. In this system, the pH of 9.5 and temperature of 122 °F indicate that Type 304L, Type 316L and higher alloys (including Hastelloy® C-22® and C-276) will be acceptable for most of the component. The maximum temperature at the scrubber bottom (412 °F) is such that either Hastelloy® C-276 or C-22® is recommended as a minimum for the lower shell. For Type 316L and the higher alloys, the expected uniform corrosion rate for 40 years, based upon a conservative value of 0.6 mpy, is 0.024 inches (24590-WTP-RPT-M-04-0008, *Evaluation Of Stainless Steel and Nickel Alloy Wear Rates In WTP Waste Streams At Low Velocities*). Dillon (2000) and Sedriks (1996) both state that the 300 series stainless steels are acceptable in up to 50% NaOH at temperatures up to about 122°F or slightly above. The usual corrosion rate for Type 304L in pure NaOH will be less than about 1 mpy up to about 212°F; although Sedriks states that the data beyond about 122°F are incorrect due to the presence of oxidizer contaminants, such as those contained in the waste.

2 Pitting Corrosion Analysis

Pitting is localized corrosion of a metal surface that is confined to a point or small area and takes the form of cavities. Chloride is known to cause pitting in acid and neutral solutions. The aqueous portion of the vessel is to operate at about 122 °F at a pH of 9 to 9.5, based on receipt of caustic scrubber solution recirculated from LVP-TK-00001. Pitting is not expected over the range of temperature and with water at a pH greater than 5. Long periods of stagnant conditions and no flow shall be avoided; procedures should be developed to ensure that materials are not compromised. If the vessel walls were wetted and left stagnant and the acid gas components concentrate by evaporation, there would be a tendency to pit. An operation limitation is provided to reduce the likelihood of corrosion initiation. According to section 6.3 of 24590-WTP-3YD-PSW-00001, *System Description for the Process Service Water System (PSW)*, water provided by the process service water (PSW) system is monitored for pH, chlorine concentration, and temperature.

The expected aqueous chemistry and temperature in this vessel fall within the limits for localized corrosion established for Type 316L in Table 1-2 and the limits for Hastelloy® C-22® (or C-276) in Table 1-4 of 24590-WTP-RPT-M-11-002, *WTP Materials Localized Corrosion Design Limits* report. Type 316L is not suitable for the expected gaseous temperatures above 200 °F that could exist in the bottom of the vessel below the packing. For the region that exceeds 200 °F, Hastelloy® C-276 or C-22® is recommended.

3 Crevice Corrosion Analysis

Crevice corrosion is a form of localized corrosion of a metal or alloy surface at, or immediately adjacent to, an area that is shielded from full exposure to the environment because of close proximity of the metal or alloy to the surface of another material or an adjacent surface of the same metal or alloy. Crevice corrosion is similar to pitting in mechanism; however, it can be initiated at lower temperatures. All welding uses butt welds and crevices in this vessel are limited by design and fabrication practice. There are no designed crevices in the pressure boundary; however, the packing, support structure and demister section have numerous crevices due to the crisscross "egg crate" design of the structure packing and the use of spot welds, which tend to create numerous crevices. The caustic scrubber design allows for the replacement of the packing. With the stated operating conditions, Type 316L is acceptable for the vessel pressure boundary above the packing. The packing is recommended to be fabricated using a higher nickel alloy which has greater crevice corrosion resistance.

CORROSION EVALUATION

The expected aqueous chemistry and temperature in this vessel fall within the limits established for Type 316L in Table 1-2 of 24590-WTP-RPT-M-11-002 and the limits for Hastelloy® C-22® (or C-276) in Table 1-4 of 24590-WTP-RPT-M-11-002. Type 316L is not suitable for the expected high temperature gaseous conditions and is only recommended for the top head and shell. For the region that exceeds 200 °F, Hastelloy® C-276 or C-22® is recommended because the nickel-based alloys will perform better than AL-6XN®, Type 304L, and Type 316L in the high temperature conditions.

4 Stress Corrosion Cracking Analysis

Stress corrosion cracking (SCC) is the cracking of a material produced by the combined action of corrosion and sustained tensile stress (residual or applied). The exact amount of chloride required to cause SCC in alkaline solutions is unknown. In part, this is because the amount varies with temperature, metal sensitization, the environment, and also because chloride tends to concentrate under heat transfer conditions by evaporation, and electrochemically during a corrosion process. Generally, as seen in Sedriks (1996) and Davis (1987), stress corrosion cracking does not usually occur below about 140°F for sensitized alloys. With the proposed normal conditions, Type 304L and Type 316L are not expected to become sensitized. Therefore, SCC is not expected.

In the region of the scrubber where there is potential for high temperature, presence of acid gases, and the potential use of acid for cleaning, Hastelloy® C-276 or C-22® offer resistance to corrosion both at low pH from acid gas and high pH from the sodium hydroxide. These conditions fall within the design limits established for alloy C-22® in Table 1-4 of 24590-WTP-RPT-M-11-002. Further up the side walls when the temperature cools, the expected aqueous chemistry and temperature in this vessel fall within the limits established for Type 316L in Table 1-2 of 24590-WTP-RPT-M-11-002.

5 End Grain Corrosion Analysis

End grain corrosion is preferential aqueous corrosion that occurs along the worked direction of wrought stainless steels exposed to highly oxidizing acid conditions. End grain corrosion typically is not a major concern, it propagates along the rolling direction of the plate, not necessarily through the cross sectional thickness. In addition, end grain corrosion is exclusive to metallic product forms with exposed end grains from shearing or mechanical cutting. Conditions which lead to end grain corrosion are not present in this component; therefore, end grain corrosion is not a concern.

6 Weld Corrosion Analysis

The welds used in the fabrication will follow the WTP specifications and standards for quality workmanship. The materials selected for this fabrication are compatible with the weld filler metals and ASME/AWS practice. Using the welding practices specified for the project there should not be gross micro-segregation, precipitation of secondary phases, formation of unmixed zones, or volatilization of the alloying elements that could lead to localized corrosion of the weld. Assuming that correct weld procedures are followed, no preferential corrosion of weld beads or heat-affected zones occurs in the expected aqueous chemistry and temperature.

7 Microbiologically Influenced Corrosion Analysis

Microbiologically influenced corrosion (MIC) refers to corrosion affected by the presence or activity, or both, of microorganisms. Typically, with the exception of cooling water systems, MIC is not observed in operating systems. The proposed operating conditions are not conducive to microbial growth; the inlet temperature is too high, and the pH is generally too high. Rinsing with untreated process water may be a concern; the use of DIW is recommended. Conditions which lead to MIC are not present in this vessel.

8 Fatigue/Corrosion Fatigue Analysis

Corrosion-fatigue is the result of the combined action of cyclic stresses and a corrosive environment. The fatigue process is thought to cause rupture of the protective passive film, upon which stainless steel can actively corrode in the localized area of the film rupture. The corrosive environment may also act to reduce the stress necessary for film rupture. The result is that a metal exposed to a corrosive environment and cyclic mechanical load may initiate cracking at conditions at stress levels less than the endurance limit for the material.

The caustic scrubber is not cyclically operated; offgas flow is constant, steady and dry. Thermal cycles and therefore thermal stress is also low and associated with the start-up and shut down of the off gas system; according to the *LAW, BOF, and LAB VESSEL Cyclic Datasheet Inputs*, 24590-WTP-MVC-50-00009, the component is expected to experience 4200 thermal cycles during the design life. Based on the low mechanical and thermal cycling, corrosion fatigue will not be observed in the scrubber.

9 Vapor Phase Corrosion Analysis

Conditions in the vapor phase and at the vapor/liquid interface can be significantly different than those present in the liquid phase. The entire vessel that is exposed to the offgas vapor phase will be periodically flushed. Type 316L is the minimum alloy acceptable for this service in the low temperature region, while alloy C-22® or C-276 is suitable for the high temperature region.

In alkaline conditions, vapor-phase corrosion in Type 316L is less than 0.001 mpy and corrosion rates in C-22, C-276 and other nickel-based alloys are shown to be lower (Rozeveld and Chamberlain).

CORROSION EVALUATION

10 Erosion Analysis

Erosion is the progressive loss of material from a solid surface resulting from fluid flow. The material loss is caused by mechanical interaction between the surface and the fluid, as the velocity increases the material loss increases. When the fluid contains a second phase, "two phase solution", erosion rates increase rapidly. The second phase material can be solid particles like sand or air/steam bubbles. WTP is more concerned with the solid particle impingement; the solid particles are generally oxides of waste.

Velocities within the vessel are not expected to be high. Erosion allowance of 0.004 inch for components with low solids content (< 2 wt %) at low velocities is based on 24590-WTP-RPT-M-04-0008. The recommended general erosion wear allowance provides sufficient protection for erosion of the vessel walls.

11 Galling of Moving Surfaces Analysis

Galling is a form of wear caused by a combination of friction and adhesion between moving surfaces. Under high compressive forces and movement, the friction temperatures cold-weld the two surfaces together at the surface asperities. As the adhesively bonded surface moves, some of the bonded material breaks away. Microscopic examination of the galled surface shows some material stuck or even friction-welded to the adjacent surface, while the softer of the two surfaces appears gouged with balled-up or torn lumps of material stuck to its surface.

Galling is commonly found in metal surfaces that are in sliding contact with each other. It is especially common where there is inadequate lubrication between the surfaces. Although the internal packing can move, the distance is minimized because the packing fill is placed in a fixed structure. The structure holds the packing together, maintaining the spacing for the maximum efficiency. The sliding distance is negligible and therefore the galling is minimal. Conditions which lead to galling are not present in this vessel; therefore galling is not a concern.

12 Fretting/Wear Analysis

Fretting corrosion refers to corrosion damage caused by a slight oscillatory slip between two surfaces. Similar to galling but at a much smaller movement, the corrosion products and metal debris break off and act as an abrasive between the surfaces, producing a classic three-body wear problem. This damage is induced under load and repeated relative surface motion, as induced for example by vibration. Pits or grooves and oxide debris characterize this damage. Conditions which lead to fretting are not present in this vessel; therefore fretting is not a concern.

13 Galvanic Corrosion Analysis

Galvanic corrosion is an electrochemical process in which one metal corrodes preferentially to another when both metals are in electrical contact, in the presence of an electrolyte. Dissimilar metals and alloys have different electrode potentials, and when two are in contact in an electrolyte, one metal acts as anode and the other as cathode. The electropotential difference between the dissimilar metals is the driving force for an accelerated attack. A potential difference far more than 200 mv is needed for sufficient driving force to make a difference. Galvanic compatibility is one of the attributes used to select the WTP alloys. Austenitic stainless steels in contact with other austenitic stainless steels do not have sufficient electropotential difference to significantly influence the metal loss. The potential difference for any combination of bi-metal couple between austenitic stainless steels Type 304L, Type 316L, 6% Mo alloys, and the nickel alloys is not sufficient for galvanic currents to cause corrosion. For such alloys, there is negligible potential difference in the aqueous chemistry so galvanic corrosion is not a concern for this component.

14 Cavitation Analysis

Cavitation corrosion is defined as another synergistic process, the combined influence of mechanical disruption of the metal surface and the corrosion of the active metal. Cavitation occurs when the local fluid pressure drops below the vapor pressure of the fluid resulting in a liquid vapor interface or bubbles to form. Their collapse on the metal surface has sufficient energy to rupture the oxide film and depending on alloy, may be capable of removing metal. The fluid chemistry and alloy define corrosion characteristics of the oxide film; however, localization of the cavitation produces a condition where the bubble collapse rate is greater than the ability to passivate, the normally passive alloy can experience accelerated loss. WTP design limits conditions which lead to cavitation; therefore cavitation is not a concern.

15 Creep Analysis

Creep is defined as a time-dependent deformation at elevated temperature and constant stress, creep is a thermally activated process. Creep is found in components subjected to heat for long periods and the creep rate generally increases as the temperature nears the melting point. The temperature at which creep begins depends on the alloy composition. Conditions which lead to creep are not present in this component; therefore creep is not a concern. For alloy C-276, ASME Boiler & Pressure Vessel Codes (BPVC) Section II, Part D, has design allowables at greater than 800 °F, demonstrating that the creep temperature for alloy C-276 is higher than the maximum operating temperature of this component.

16 Inadvertent Nitric Acid Addition

At this time, the design does not provide for the presence of nitric acid reagent in this system.

17 Conclusion and Justification

Type 316L and 6% Mo are expected to be sufficiently resistant to the waste solution with a probable general corrosion rate of less than 1 mpy. For components potentially exposed to high temperatures, the material of construction is Hastelloy® C-276 or C-22®. Because the operation of the internal packing and mist eliminators will be monitored and replacement is expected, no corrosion allowance is required. A

CORROSION EVALUATION

corrosion allowance in all other cases is 0.04 inch. Based on the expected operating conditions at high pH, Type 316L is expected to be satisfactorily resistant to localized corrosion and is suitable for the vessel upper shell (lower temperature region). In the region of the scrubber where there is potential of for high temperature, and the presence of acid gases, Hastelloy® C-276 or C-22® offer resistance to corrosion both at low pH from acid gas and high pH from the sodium hydroxide. Further up the side walls where the temperature cools, type 316L stainless steel is appropriate. Conditions which lead to end grain corrosion, weld corrosion, MIC, and creep are not present in this system. Conditions which lead to fatigue or corrosion fatigue, vapor phase corrosion, galling, fretting, galvanic corrosion, and cavitation are not present in this component by design.

The recommended corrosion allowance provides sufficient protection for erosion of the vessel wall.

18 Margin

The system is designed with a uniform corrosion allowance of 0.04 inch based on the range of inputs, system knowledge, handbooks, literature, and engineering judgment/experience. The service conditions used for materials selection has been described above and results in a predicted uniform loss due to corrosion and erosion of 0.028 inch. The specified minimum corrosion allowance (0.040 inch) exceeds the minimum required corrosion allowance (0.028 inch) thus establishing a design margin. The uniform corrosion design margin for the operating conditions is sufficient to expect 40 year operating life of the scrubber (excludes the packing and mist eliminators which are planned to be replaced over the life of the plant) and is justified in the referenced calculations.

Localized erosion of this component is not expected. Prior to reaching the caustic scrubber, the offgas passes through a variety of equipment that will render the inlet streams particulate free. Since localized erosion effects are not present, additional localized corrosion protection is not required.

The maximum operating parameters for this vessel are defined in the PCDS. As shown in the table below, the PCDS reported pH, chemistry, and temperature are bounded by the materials localized corrosion design limits. The aqueous normal operating constituent concentrations and operating conditions are within the range allowed in the *WTP Materials Localized Corrosion Design Limits* report. The difference between the design limits and the operating maximum (PCDS values) is the localized corrosion design margin and, based on the operating conditions, is sufficient to expect a 40 year operating life. The LAW Melter Offgas Caustic Scrubber, LVP-SCB-00001, is protected from localized corrosion (pitting, crevice, and stress corrosion cracking) by operating within the acceptable range of the design limits. Operational and process restriction will be used to ensure the limits are maintained.

MATERIALS LOCALIZED CORROSION DESIGN LIMITS – Type 316L			
	Temperature (°F)	**pH**	**Chloride (ppm)**
DESIGN LIMIT	**150 max**	**5 to 10**	**300 max**
Caustic scrub solution to LVP-TK-00001 (LVP17) Note 1	122	9.5	51
Inlet Vessels to LVP-SCB-00001	**Temperature (°F)**	**pH**	**Chloride (ppm)**
Caustic scrub solution from LVP-TK-00001 (LVP17) Note 2	122	9.5	51

MATERIALS LOCALIZED CORROSION DESIGN LIMITS – Hastelloy® C-22®			
		pH	**Chloride (ppm)**
DESIGN LIMIT		**5 to 10**	**30,000 max**
Caustic scrub solution to LVP-TK-00001 (LVP17) Note 1		9.5	51
Inlet Vessels to LVP-SCB-00001		**pH**	**Chloride (ppm)**
Caustic scrub solution from LVP-TK-00001 (LVP17) Note 2		9.5	51

The comparisons in these tables covers only the aqueous portion of the vessel. Offgas conditions were not evaluated in 24590-WTP-RPT-M-11-002, the source of the design limits. For the purposes of corrosion resistance, C-22® and C-276 alloys can be considered similar, and the same material localized corrosion design limits apply.

Notes:
1) LVP-SCB-00001 (aqueous) process stream LVP17 – 24590-WTP-RPT-PR-04-0001-04, Figure C-36
2) LVP-TK-00001 process stream LVP17 – 24590-WTP-RPT-PR-04-0001-04, Figure C-38

CORROSION EVALUATION

19 References

1. 24590-LAW-M4C-LOP-00001, *LAW Melter Offgas System Design Basis Flowsheets.*
2. 24590-LAW-M6WX-LVP-00002002, *MS Line List For P&ID 24590-LAW-M6-LVP-00002002.*
3. 24590-LAW-MKD-LVP-00011, *24590-LAW-MK-LVP-SCB-00001 - LAW Melter Offgas Caustic Scrubber.*
4. 24590-LAW-P1-P01T-00005, *LAW Vitrification Building General Arrangement Plan at El. 48 Feet - 0 Inches.*
5. 24590-QL-POA-MKAS-00003-06-00001, *Calculation - LAW Melter Offgas Caustic Scrubber Process.*
6. 24590-WTP-GPG-M-047, *Preparation of Corrosion Evaluations.*
7. 24590-WTP-M0C-50-00004, *Wear Allowance for WTP Waste Slurry Systems.*
8. 24590-WTP-MVC-50-00009, *LAW, BOF, and LAB Vessel Cyclic Datasheet Inputs.*
9. 24590-WTP-RPT-M-04-0008, *Evaluation Of Stainless Steel and Nickel Alloy Wear Rates In WTP Waste Streams At Low Velocities.*
10. 24590-WTP-RPT-M-11-002, *WTP Vessel Localized Corrosion Limit Analysis Report.*
11. 24590-WTP-RPT-PR-04-0001-04, *WTP Process Corrosion Data – Volume 4.*
12. 24590-WTP-3YD-PSW-00001, *System Description for the Process Service Water System (PSW).*
13. ASME. *ASME Boiler and Pressure Vessel Code*, Section II, Part D – Properties. American Society of Mechanical Engineers, New York, NY.
14. Davis, JR (Ed), 1987, *Corrosion, Vol 13*, In "Metals Handbook", ASM International, Metals Park, OH 44073
15. Rozeveld, A and Chamberlain DB. 1997. *Mobile Evaporator Corrosion Test Results*, ANL-97/2. Argonne National Laboratory, Argonne, IL.
16. Sedriks, AJ, 1996, *Corrosion of Stainless Steels*, John Wiley & Sons, Inc., New York, NY 10158

Additional Reading

- 24590-LAW-M6-LVP-00002002, *P&ID-LAW - LAW Secondary Offgas/Vessel Vent Process System Caustic Scrubber LVP-SCB-00001.*
- 24590-QL-POA-MKAS-00003-07-00002, *LAW Offgas Scrubber FMEA and Reliability Report.*
- CCN 088587, Meeting Minutes from 6/1/2004 meeting with the following purpose: LAW Caustic Scrubber pH Requirements to Address ICD-6 and Material Selection, by Scott Colby
- CCN 130170, Blackburn, LD to PG Johnson, Internal Memo, Westinghouse Hanford Co, *Evaluation of 240-AR Chloride Limit*, August 15, 1991.
- CCN 130173, Dillon, CP (Nickel Development Institute), Personal Communication to J R Divine (ChemMet, Ltd., PC), 3 Feb 2000.
- Agarwal, DC, *Nickel and Nickel Alloys*, In: Revie, WW, 2000. *Uhlig's Corrosion Handbook*, 2nd Edition, Wiley-Interscience, New York, NY 10158
- Berhardsson, S, R Mellstrom, and J Oredsson, 1981, *Properties of Two Highly Corrosion Resistant Duplex Stainless Steels*, Paper 124, presented at Corrosion 81, NACE International, Houston, TX 77218
- Chambers, G and NS Meck, 2002, *Caustic Dealloying Corrosion of High Performance Nickel Alloys*, Presented at Stainless Steel World Conference and Expo, Houston TX 77218
- Davis, JR (Ed), 1994, *Stainless Steels*, In ASM Metals Handbook, ASM International, Metals Park, OH 44073
- Hamner, NE, 1981, *Corrosion Data Survey*, Metals Section, 5th Ed, NACE International, Houston, TX 77218
- Jones, RH (Ed.), 1992, *Stress-Corrosion Cracking*, ASM International, Metals Park, OH 44073
- Koch, GH, 1995, *Localized Corrosion in Halides Other Than Chlorides*, MTI Pub No. 41, Materials Technology Institute of the Chemical Process Industries, Inc, St Louis, MO 63141
- Phull, BS, WL Mathay, & RW Ross, 2000, *Corrosion Resistance of Duplex and 4-6% Mo-Containing Stainless Steels in FGD Scrubber Absorber Slurry Environments*, Presented at Corrosion 2000, Orlando, FL, March 26-31, 2000, NACE International, Houston TX 77218.
- Uhlig, HH, 1948, *Corrosion Handbook*, John Wiley & Sons, New York, NY 10158
- Van Delinder, LS (Ed), 1984, *Corrosion Basics*, NACE International, Houston, TX 77084
- Wilding, MW and BE Paige, 1976, *Survey on Corrosion of Metals and Alloys in Solutions Containing Nitric Acid*, ICP-1107, Idaho National Engineering Laboratory, Idaho Falls, ID

CORROSION EVALUATION

PROCESS CORROSION DATA SHEET (extract)

Component(s) (Name/ID #) LAW Melter Offgas Caustic Scrubber (LVP-SCB-00001)

Facility: LAW

In Black Cell?: No

		Stream ID	
		LVP17	
Chemicals	Unit	AQUEOUS	DESIGN LIMIT*
Cations (ppm)			
Al^{+3} (Aluminum)	ppm	0	NA
Fe^{+3} (Iron)	ppm	0	NA
Hg^{+2} (Mercury)	ppm	0	NA
Pb^{+2} (Lead)	ppm	0	NA
Anions (ppm)			
Cl^- (Chloride)	ppm	51	300 max
CO_3^{-2} (Carbonate)	ppm	5518	NA
F^- (Fluoride)	ppm	15	NA
NO_2^- (Nitrite)	ppm	0	NA
NO_3^- (Nitrate)	ppm	1	NA
PO_4^{-3} (Phosphate)	ppm	0	NA
SO_4^{-2} (Sulfate)	ppm	31	NA
		LVP09	
Chemicals		GASEOUS	
CO2	ppmV	22,330	NA
HCl	ppmV	7	NA
HF	ppmV	4	NA
NH3	ppmV	237	NA
NO	ppmV	35	NA
SO2	ppmV	7	NA
SO3(s)	mg/m3	3	NA
$OH(aq)^-$	ppm	76	NA
$OH(s)^-$	ppm	0	NA
pH		9.50	5 to 10
Suspended Solids	wt%	0	NA
Temperature	°F	122.00	150 max

* Design limits from 24590-WTP-RPT-M-11-002.

Figure C-36 LVP-SCB-00001 Aqueous PCDS

Vessel : LVP_SCB_1

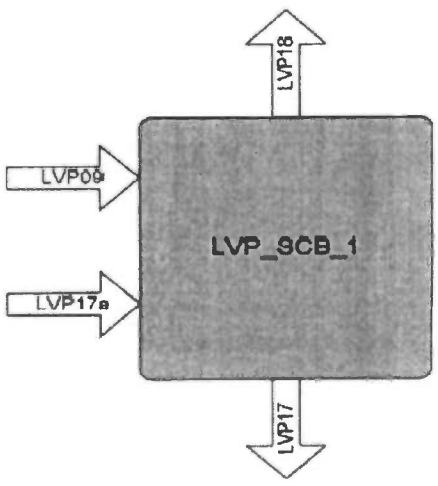

	Stream ID			
	LVP09	LVP17a	LVP18	LVP17
Properties				
Suspended Solids [wt %]	n/a	0	0	0
Total Salts [wt %]	n/a	0.62	0.00	0.63
Sodium Molarity [M]	n/a	0.11	n/a	0.11
Relative Humidity [%]	1.25	n/a	100.00	n/a
pH	n/a	11.43	n/a	9.50
Anti-Foam Agent [ppm]	0	0	0	0
TOC [kg/h]	1.46E-04	5.68E-03	2.40E-11	4.87E-02
Pressure [bar]	0.90	0.90	0.87	0.90
Temperature [C]	211.11	50.00	50.00	50.00
Temperature [F]	412.00	122.00	122.00	122.00
Water Flow Rate [kg/hr]	319.15	45,169.00	539.18	44,948.97
Total Aqueous Flow Rate [kg/hr]	319.15	45449.33	539.18	45229.30
Total Flow Rate [kg/hr]	6.20E+03	4.54E+04	6.42E+03	4.52E+04
UserNote	VIT VAPOR Caustic Scrubber Inlet	VIT LIQUID LAW Liquid to LVP-SCB-00001	VIT VAPOR Caustic Scrubber Offgas Discharge	VIT LIQUID Caustic Scrubber Scrubbing Solution Recirc.
AQUEOUS				
Cations (ppm)				
Ag+	0	0	0	0
Al+3	0	0	0	0
Am+3	0	0	0	0
As+5	0	0	0	0
B+3	0	0	0	0
Ba+2	0	0	0	0
Be+2	0	0	0	0
Bi+3	0	0	0	0
Ca+2	0	0	0	0
Cd+2	0	0	0	0
Ce+4	0	0	0	0
Co+2	0	0	0	0
Cr+3	0	0	0	0
Cr+6	0	0	0	0
Cs+	0	0	0	0
Cu+2	0	0	0	0
Eu+3	0	0	0	0
Fe+2	0	0	0	0
Fe+3	0	0	0	0
H+	0	0	0	4
Hg+2	0	0	0	0
K+	0	0	0	0
La+3	0	0	0	0
Li+	0	0	0	0
Mg+2	0	0	0	0
Mn+4	0	0	0	0
Mo+6	0	0	0	0
Na+	0	2435	0	3994
Nd+3	0	0	0	0
Ni+2	0	0	0	0
Pb+2	0	0	0	0
Pd+2	0	0	0	0
Pr+4	0	0	0	0
Pu+4	0	0	0	0
Ra+2	0	0	0	0
Rb+	0	0	0	0
Rh+3	0	0	0	0
Ru+4	0	0	0	0
Sb+3	0	0	0	0
Se+4	0	0	0	0
Si+4	0	0	0	0
Sr+2	0	0	0	0
Ta+5	0	0	0	0
Tc+4	0	0	0	0
Te+4	0	0	0	0
Th+4	0	0	0	0
Ti+4	0	0	0	0
Tl+5	0	0	0	0
U+4	0	0	0	0
V+3	0	0	0	0
W+6	0	0	0	0
Y+3	0	0	0	0
Zn+2	0	0	0	0
Zr+4	0	0	0	0
Anions (ppm)				
B(OH)4-	0	0	0	0
C2O4-2	0	0	0	0
Cl-	0	49	0	51
CN-	0	0	0	0
CO3-2	0	3400	0	5518
F-	0	15	0	15
H2PO4-	0	0	0	0
H2SiO4-2	0	0	0	0
H3SiO4-	0	0	0	0
HCO3-	0	0	0	0
HPO4-2	0	0	0	0
HSO3-	0	0	0	0
HSO4-	0	0	0	0
I-	0	0	0	0
IO3-	0	0	0	0
NH4+	0	222	0	236
NO2-	0	0	0	0
NO3-	0	1	0	1
O-2	0	0	0	0
O2-2	0	0	0	0
OH(aq)-	0	46	0	76
OH(s)-	0	0	0	0
PO4-3	0	0	0	0
SO3-2	0	0	0	101
SO4-2	0	1	0	31
Organics (ppm)				
AFA_DCMP	0	0	0	0
AFA_NVOC	0	0	0	0
NVOC	0	0	0	0
Sucrose	0	0	0	0
SVOC	0	0	0	0
VOC	0	0	0	1

CORROSION EVALUATION

Figure C- 37 LVP-SCB-00001 Gaseous PCDS

Vessel : LVP_SCB_1

	Stream ID			
	LVP09	LVP17a	LVP18	LVP17
Properties				
Suspended Solids [wt %]	n/a	0	0	0
Total Salts [wt %]	n/a	0.62	0.00	0.63
Sodium Molarity [M]	n/a	0.11	n/a	0.11
Relative Humidity [%]	1.25	n/a	100.00	n/a
pH	n/a	11.43	n/a	9.50
Anti-Foam Agent [ppm]	0	0	0	0
TOC [kg/h]	1.48E-04	5.68E-02	2.40E-11	4.87E-02
Pressure [bar]	0.90	0.90	0.87	0.90
Temperature [C]	211.11	50.00	50.00	50.00
Temperature [F]	412.00	122.00	122.00	122.00
Water Flow Rate [kg/hr]	318.16	45,109.00	539.18	44,648.97
Total Aqueous Flow Rate [kg/hr]	318.16	45449.33	539.18	45229.30
Total Flow Rate [kg/hr]	8.20E+03	4.54E+04	8.42E+03	4.52E+04
UserNote	VIT VAPOR Caustic Scrubber Inlet	VIT LIQUID LAW Liquid to LVP-SCB-00001	VIT VAPOR Caustic Scrubber Offgas Discharge	VIT LIQUID Caustic Scrubber Scrubbing Solution Recirc
GASEOUS				
(ppmV or mg/m³)				
Ar	8401	0	6169	0
CH3I	0	0	0	0
Cl2	0	0	0	0
CO	18	0	8	0
CO2	22330	0	6761	0
F2	0	0	0	0
H2	0	0	0	0
HCl	7	0	0	0
HCN	0	0	0	0
HF	4	0	0	0
I2	0	0	0	0
N2	711673	0	529157	0
NaCl(s)	0	0	0	0
NaCN(s)	0	0	0	0
NaF(s)	0	0	0	0
NaI(s)	0	0	0	0
NH3	237	0	122	0
NO	36	0	26	0
NO2	0	0	0	0
O2	190801	0	141350	0
P2O5(s)	0	0	0	0
PO2	0	0	0	0
SO2	7	0	0	0
SO3(s)	3	0	0	0

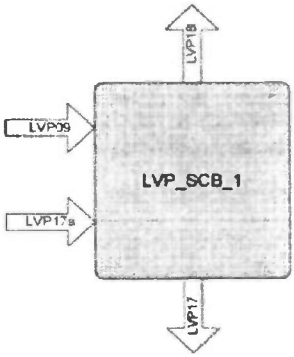

Note: Concentrations for constituents representing particulates (as denoted by suffix "(s)" in their name) are reported in units of mg/m³; all others are reported in units of ppmV.

GENERAL NOTE FOR USE OF PCDS:

- *The data in the non-shaded columns of the PCDSs has NOT been adjusted to comply with the highest expected, vessel-specific operational conditions. It is provided in the initial-pass through the PCDSs for completeness.*
- *The information provided by the PCDS report is intended solely for use in support of the vessel material selection process and Corrosion Evaluations. The inputs, assumptions, and computational/engineering models used in generating the results presented herein are specific to this effort. Use of the information presented herein for any other purpose will require separate consideration and analysis to support justification of its use for the desired, alternative purpose.*
- *The process descriptions in this report cover routine process operations and non-routine (infrequent) process operations, when such exist, that could impact corrosion or erosion of process equipment.*
- *The process descriptions provided in this report are for general information and reflective of the corrosion engineer's analysis for transparency, the information is current only at the time this document is issued. These process descriptions should not be referenced for design.*

CORROSION EVALUATION

6.6.1 Description of Vessel/Equipment

The LAW Secondary Offgas/Vessel Vent Process (LVP) System is designed to treat the offgas from the LAW Primary Offgas Process (LOP) System and the LAW Facility vessel vents. The purpose of the LVP System is to remove almost all remaining particulates, miscellaneous acid gases, nitrogen oxides, VOCs, and mercury from the LAW Facility offgas that have not been removed by the LOP system.

Figure 10 is a sketch of the input and output arrangement of streams for all equipment within the LVP System. Streams that are not primary routes (infrequent transfers) are represented with dashed lines.

Figure 10a - LVP System Sketch

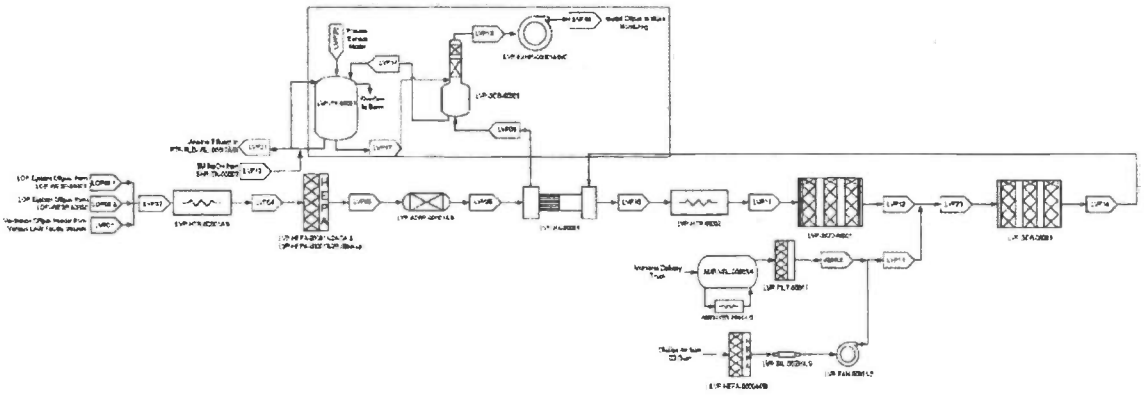

Figure 10b - LVP System Sketch (pertinent portion of system shown)

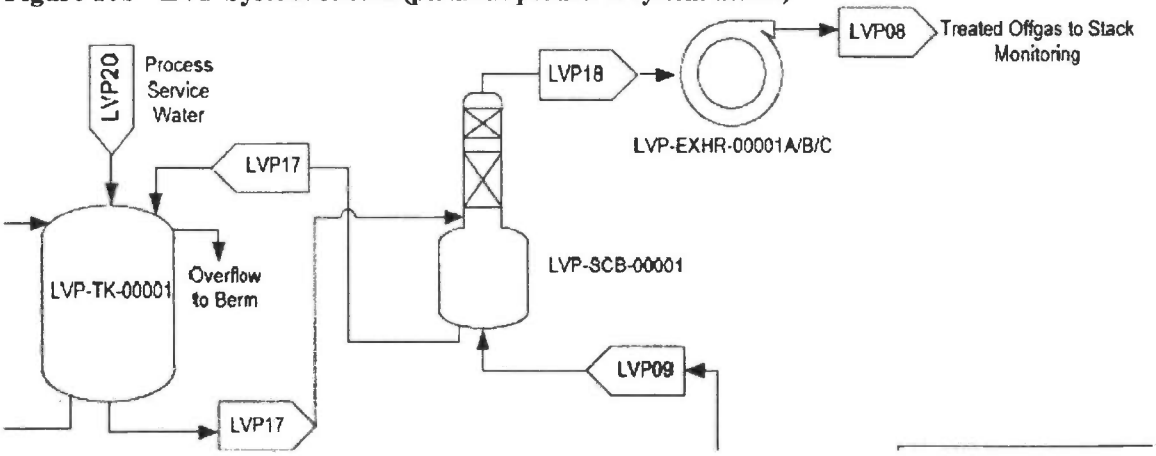

6.6.2 System Functions

The process functions of this system are as follows:

- Receive LAW Offgas from LOP System and LAW Facility Vessel Ventilation Streams
- Receive Reagents Streams Such as Ammonia or Dilution Air to Ensure Offgas Component Destruction
- Treat Offgas to Ensure Requirements are Met Before Emitting to Atmosphere
- Transfer Offgas to Stack
- Transfer Liquid Effluents to RLD-VSL-00017A/B

These vessels perform additional system functions beyond the process functions, but these are outside the scope of this document. The non-process functions are not discussed any further in this document. However, they are listed below for completeness:

- Confine Hazardous Materials
- Flush System Components
- Report System Data

6.6.3 Description of Process Functions

All process streams have been taken from Process Flow Diagrams 24590-LAW-M5-V17T-00010 and 24590-LAW-M5-V17T-00011 and associated drawing change notices (DCNs) 24590-LAW-M5N-V17T-00012/15/17/29 and 24590-LAW-M5N-V17T-00012/19/23/29, respectively. The P&IDs have also been looked at to obtain the most accurate flow diagram. These are as follows: 24590-LAW-M6-LVP-00001001 / 1002 / 1003 / 1004 / 1005 / 1006 / 2001 / 2002 / 2003 / 2004 / 2005 / 2006 / 3001 / 4001 / 4002 / 4003 / 5001 / 5002 and 24590-BOF-M6-AMR-00002001 / 2002 / 3001 / 3002 / 5001. See Section 7.1.3 for corresponding references in this section. A description of the process function of each piece of equipment is listed as follows:

Equipment	Process Function
LVP-SCB-00001	The caustic scrubber serves as a final offgas treatment process by further removing acid gases and providing cooling. SO_2 in the offgas stream is absorbed in the scrub solution.

6.6.3.1 Receipt Streams

The LVP system primarily receives LAW offgas from the LOP system and LAW Facility vessel ventilation streams. Other LVP system equipment receives various streams to help process the offgas. The receipt streams for each piece of equipment are listed as follows, by vessel, in order of process flow:

LVP-SCB-00001

- LVP09 - Offgas from LVP-SCR-00001 via LVP-HX-00001
- LVP17 - Caustic Scrub Solution from LVP-TK-00001 to LVP-SCB-00001

CORROSION EVALUATION

6.6.3.1.13 LVP09 - Offgas from LVP-SCR-00001 via LVP-HX-00001 to LVP-SCB-00001

This stream is the offgas from the selective catalytic reducer via the heat exchanger to the scrubber.

Molarity
N/A

Temperature
The temperature will normally be 370°F (24590-LAW-M4E-LOP-00009, pg. 11, Cell Q45, Ref. 7.1.4(13)). The maximum temperature is 412°F (24590-LAW-M4E-LOP-00009, pg. 15, Cell Q45, Ref. 7.1.4(13)).

Solids Concentration
The solids concentration will normally be near zero or trace solids.

Vapor Density
The vapor density will normally be 3.27E-2 lb/ft^3 to 2.84E-2 lb/ft^3 (24590-LAW-M4E-LOP-00009, pg. 11, Cell AI44; pg. 15, Cell AI44, Ref. 7.1.4(13)).

Liquid pH
N/A

6.6.3.1.14 LVP17 - Caustic Scrub Solution from LVP-TK-00001 to LVP-SCB-00001

Stream LVP17 is the caustic scrubber solution recirculating from LVP-TK-00001 to LVP-SCB-00001.

Molarity
The normal sodium molarity range of the caustic scrubber solution from LVP-TK-00001 is 1.78-1.89 molar Na (24590-WTP-M4C-V11T-00024, Ref. 7.1.4(30)). Note that 5M NaOH is added to the scrubbing solution to neutralize the acid gases collected in the caustic collection tank LVP-TK-00001 and maintain the pH value of the scrubbing solution. The resulting sodium molarity for this stream will be provided in the corrosion data sheet.

Temperature
The minimum temperature of the caustic scrubber solution from LVP-TK-00001 is 59°F based on the minimum temperature of the C3 area (24590-WTP-DB-ENG-01-001, Ref. 7.1.1(2), Table 12-1). The normal and maximum temperature of the caustic scrubber solution from LVP-TK-00001 is 122°F based on the scrubber solution temperature in equilibrium with the scrubber exit offgas temperature (24590-LAW-MEC-LVP-00003, Ref. 7.1.4(14), Section 6.14).

Solids Concentration
The solids concentration for the caustic scrubber solution from LVP-TK-00001 is negligible (24590-WTP-DB-PET-09-001, Ref. 7.1.1(3), Appendix B, Table B-23).

Liquid Density
Process service water is added to the caustic scrubber solution to maintain the scrubber solution below 10wt% dissolved solids (24590-LAW-MEC-LVP-00003, Ref. 7.1.4(14), Section 2.4). The maximum density of the caustic scrubber solution is 68.6 lb/ft^3 (24590-LAW-MEC-LVP-00003, Ref. 7.1.4(14), Section 2.30)

Liquid pH
The pH of the scrubber solution is continuously monitored and normally maintained in the range of 9.0 to 9.5 (24590-LAW-MTC-LVP-00002, Ref. 7.1.4(19), Section 8). The scrubber solution pH can be raised to 14 when high halide concentrations are measured in the scrubber bottom to control 316L stainless steel corrosion rates (24590-LAW-MKD-LVP-00011, Ref. 7.1.5(4), pg.10, Note 2).

6.6.3.2 Outlet Streams

The outlet streams for each piece of equipment are listed as follows, by vessel, in order of process flow:

LVP-SCB-00001

- LVP17 - Scrub Solution to LVP-TK-00001
- LVP18 - Offgas from LVP-SCB-00001 to LVP-EXHR-00001A/B/C

6.6.3.1.15 LVP18 - Offgas from LVP-SCB-00001

This stream is the offgas from the scrubber that is sent to the exhausters and subsequently to the stack.

Molarity
N/A

Temperature
The normal and maximum temperature of stream LVP18 will be 122°F (24590-LAW-M4E-LOP-00009, Ref. 7.1.4(13)).

Solids Concentration
The solids concentration will normally be near zero or trace solids because water is added to LVP-TK-00001 for precipitation control.

Vapor Density
The vapor density will normally be 4.84E-2 lb/ft^3 to 3.71E-2 lb/ft^3 (24590-LAW-M4C-LOP-00001, pg. 37, Cell AI48; pg. 41, Cell AI48, Ref. 7.1.4(12)).

Liquid pH
N/A

6.6.4 Process Modes

6.6.4.1 Normal Operations

Based on the assessment of streams frequently transferred in and out of the LVP System equipment, the following normal processing modes are considered:

LVP-SCB-00001

- LVP09 - Offgas from LVP-SCR-00001 via LVP-HX-00001
- LVP17 - Caustic Scrub Solution from LVP-TK-00001
- Scrub Solution to LVP-TK-00001
- LVP18 - Offgas from LVP-SCB-00001 to LVP-EXHR-00001A/B/C

6.6.4.2 Infrequent Operations

None identified.

CORROSION EVALUATION

6.6.5 Summary of Processing Conditions for LVP System

6.6.5.1 Normal Operations

The following table summarizes the normal processing modes for LVP System equipment.

Stream Number	Weight % UDS		Na Molarity		Temperature (°F)	
	normal	upper	normal	upper	normal	upper
LVP-SCB-00001						
LVP09 (in)	0	trace	n/a	n/a	370	412
LVP17 (in)	0	trace	1.79-1.89	Note 1	122	122
Scrub Solution to LVP-TK-00001 (out)	0	trace	1.79-1.89	Note 1	122	122
LVP18 (out)	0	trace	n/a	n/a	122	122

ISSUED BY
RPP-WTP PDC

R11529538

RIVER PROTECTION PROJECT – WASTE TREATMENT PLANT

ENGINEERING SPECIFICATION
FOR
LAW Melter Offgas Caustic Scrubber

Content applicable to ALARA?	☒ Yes ☐ No	**Quality Level**
ADR No. 24590-LAW-ADR-M-03-003	**Rev** 3	Q
Specification changes retroactive?	☐ Yes ☒ No ☐ N/A (alpha revision or revision 0)	DOE Contract No. DE-AC27-01RV14136

NOTE: Contents of this document are Dangerous Waste Permit affecting.

REV	DATE	BY	CHECK	REVIEW	E&NS	EGS
2	9-26-12	Cathy Priest	Mike O'Neill	Phil Snider	D. Krahn 9-26-12	Dan Mildon
1	4/25/07	M.A. Seed	Craig Knauss	P. Martinelli	D. Krahn	J. Julyk
0	3/13/05	D. Pease	C. Slater	C. Morley	N/A	M. Hoffman

SPECIFICATION No. 24590-LAW-3PS-MKAS-T0001 **Rev** 2

Revision History

Revision	Reason for Revision
0	Issued for Purchase
1	Revised section 1.4.2, revised section 3.8.3, deleted any reference to anchor chair, deleted any reference to skirts, deleted any reference to davits, added tailing lug standard detail, added fatigue analysis standard specifications, revised section 3.7.2 deleted all other sections of 3.7.
2	Incorporated previously-issued change documents including 24590-LAW-3PN-MKAS-00002 and 24590-QL-MRA-00003-T0007 - no rev bars shown. Used latest specification template - no rev bars shown for items arranged into new format. The following changes/additions indicated by rev bar and **bold** font. Revised section 1.3.4 to refer to MDS for insulation. Section 1.4 definitions - deleted unused acronyms/definitions; added EQD. Deleted redundant information in section 1.4.3, covered by section 1.5. Referred to EQD in sections 1.5, 3.2.11, and 3.5 - EQD was incorporated into PO via previous change documents, but appropriate references were not made throughout spec. Clarified vessel mounting and support terminology in 3.2.6 and 3.2.12. Section 3.2.9 - refer to MDS for corrosion allowance. Section 3.4.12 revised scrubber mounting information. Renamed Attachment "A" (was Attachment 1 in spec Rev 1).

Notice

Please note that source, special nuclear, and byproduct materials, as defined in the Atomic Energy Act of 1954 (AEA), are regulated at the US Department of Energy (DOE) facilities exclusively by DOE acting pursuant to its AEA authority. DOE asserts, that pursuant to the AEA, it has sole and exclusive responsibility and authority to regulate source, special nuclear, and byproduct materials at DOE-owned nuclear facilities. Information contained herein on radionuclides is provided for process description purposes only.

Contents

Notice iii
1 Scope 1
1.1 Project Description and Location 1
1.2 Equipment, Material, and Services Required 1
1.3 Work by Others 1
1.4 Acronyms, Abbreviations, and Definitions 2
1.5 Safety/Quality Classifications 3
2 Applicable Documents 3
2.1 General 3
2.2 Codes 4
2.3 Reference Documents/Drawings 4
3 Design Requirements 5
3.1 Basic Function 5
3.2 General 6
3.3 Performance 7
3.4 Design Conditions 8
3.5 Equipment Environmental Qualification (EEQ) 9
3.6 Loadings 9
3.7 Instrumentation and Control Requirements 10
3.8 Accessibility and Maintenance 10
4 Materials 11
4.1 Construction 11
4.2 Prohibited/Restricted Materials 12
5 Fabrication 12
5.1 General 12
5.2 Welding 12
6 Tests and Inspections 12
6.1 General 12
6.2 Non-Destructive Examinations 13
7 Preparation for Shipment 13
7.1 General 13
7.2 Cleanliness 13
7.3 Tagging 13

7.4 Documentation 13
7.5 Shipping, Handling, and Storage Instructions 14
8 Quality Assurance 14
8.1 QA requirements specific to item(s) or service 14
8.2 Program QA elements 14
9 Configuration Management 14
10 Documentation and Submittals 14
10.1 General 14
10.2 Submittals 15

Attachments

Attachment A A-1

1 Scope

1.1 Project Description and Location

The Hanford Tank Waste Treatment and Immobilization Plant (WTP) is a complex of radioactive waste treatment facilities where the US Department of Energy (DOE) Hanford Site tank waste will be pretreated and immobilized into a stable glass form via vitrification. The WTP contractor will design, build, and start up the WTP pretreatment and vitrification facilities for the DOE Office of River Protection (ORP).

The Hanford Site occupies an area of about 560 square miles along the Columbia River, north of Richland, WA in the USA. The WTP facilities will be constructed at the 200 East Area of the Hanford Site. The site elevation varies from 662 feet to 684 feet above mean sea level.

1.2 Equipment, Material, and Services Required

This specification establishes the minimum requirements for the performance, design, analysis, materials, fabrication, testing, inspection, quality assurance, qualification, documentation, and preparation for shipment of the LAW Melters Offgas Caustic Scrubber, plant item number 24590-LAW-MK-LVP-SCB-00001, for use in the WTP Low-Activity Waste (LAW) Facility.

The scope of work for the Seller includes all work specifically defined in this specification, and its addenda and attachments. Work shall include, but not be limited to, the following:

1.2.1 Provide design, materials, fabrication, testing, inspection, preparation for shipment, documentation, and submittals of a LAW Melters Offgas Caustic Scrubber, plant item number 24590-LAW-MK-LVP-SCB-00001 in accordance with this specification, its addenda and attachments, the material requisition (MR) # 24590-QL-MRA-MKAS-00003, referenced codes and standards, and Buyer documents.

1.2.2 Provide written (process, control, mechanical, hydraulic, and operation) guarantee that all equipment and components supplied by the Seller shall perform to the requirements of this specification, the MR # 24590-QL-MRA-MKAS-00003, referenced codes and standards, and Buyer documents.

1.2.3 Provide Equipment Seismic Qualification.

1.3 Work by Others

Any item not specifically listed as being supplied by the Buyer shall be provided by the Seller. The Buyer shall supply the following:

1.3.1 Shipping of the LAW Melters Offgas Caustic Scrubber.

1.3.2 Unloading, storage, and installation labor of all materials and equipment at the Buyer's jobsite.

1.3.3 Supply and installation of instrumentation and controls.

1.3.4 **Insulation** will be supplied and installed by the Buyer's Subcontractor, nevertheless, Seller shall include insulation in the seismic calculation. **See Reference 2.3.1, the Mechanical Datasheet (MDS), for insulation information.**

1.3.5 Buyer shall provide roof level access maintenance platform for top access manway needed to change out demister pads.

1.3.6 The equipment environmental qualification (EEQ) will be performed by the Buyer per Section 3.5. The Seller is NOT required to perform any of the EEQ.

1.4 Acronyms, Abbreviations, and Definitions

1.4.1 Acronyms and Abbreviations

ALARA	As Low As Reasonably Achievable
ASME	American Society of Mechanical Engineers
CFR	Code of Federal Regulations
CM	**Commercial**
DF	Decontamination Factor
DOE	US Department of Energy
EEQ	**Equipment Environmental Qualification**
EQD	**Equipment Qualification Datasheet**
ESQ	**Equipment Seismic Qualification**
FMEA	Failure Mode and Effects Analysis
LAW	Low-Activity Waste
LVP	LAW Secondary Offgas/Vessel Vent Process System
MDS	Mechanical Data Sheet
MIL-STD	Military Standard
MR	Material Requisition
MSDS	Material Safety Data Sheet
ORP	Office of River Protection
Q	**Quality**
QA	Quality Assurance
QAP	Quality Assurance Program
RLD	**Radioactive Liquid Waste Disposal**
SO_X	Sulfur Oxides
WG	Water Gauge
WTP	Hanford Tank Waste Treatment and Immobilization Plant

1.4.2 Quality Level

The quality level identifies the quality requirements to be applied to the equipment. The identified quality levels are Q and CM (Commercial). Quality level is specifically defined on the associated mechanical data sheets (MDS).

1.4.3 **Deleted**

1.4.4 Other definitions

1.4.4.1 Deleted

1.4.4.2 Decontamination Factor (DF): Equals the ratio of the concentration of a component in the inlet gas versus the concentration of the same component in the outlet gas.

1.4.4.3 MDS: Refers to the mechanical data sheet for the LAW Melters Offgas Caustic Scrubber, Buyer document number 24590-LAW-MKD-LVP-00011.

1.4.4.4 MR: Refers to the material requisition for the LAW Melters Offgas Caustic Scrubber, Buyer document number 24590-QL-MRA-MKAS-00003.

1.4.4.5 Deleted

1.4.4.6 Scrubber: Refers to the LAW Melters Offgas Caustic Scrubber, plant item number 24590-LAW-MK-LVP-SCB-00001.

1.4.4.7 **EQD: Refers to the Equipment Qualification Datasheet (EQD) for the LAW Melters Offgas Caustic Scrubber, Reference 2.3.24.**

1.5 Safety/Quality Classifications

Refer to the MDS for the quality level and seismic category designations of the LAW Melters Offgas Caustic Scrubber**, and to the EQD for the safety classification.**

2 Applicable Documents

2.1 General

2.1.1 Work shall be done in accordance with the referenced codes, standards, and documents listed below, which are an integral part of this specification. Use of any other edition, revision, or issue requires approval from the Buyer

2.1.2 When specific chapters, sections, parts, or paragraphs are listed following a code, industry standard, or reference document, only those chapters, sections, parts, or paragraphs of the document are applicable and shall be applied. If a date or revision is not listed, the latest issue, including addenda, at the time of Request for Quote shall apply. When more than one code, standard, or referenced document covers the same topic, the requirements for all must be met with the most stringent governing.

2.2 Codes

2.2.1 ASME Boiler and Pressure Vessel Code, Section VIII, Division 1, *Rules for Construction of Pressure Vessels.*

2.2.2 ASME-NQA-1-1989, *Quality Assurance Program Requirements for Nuclear Facilities.*

2.2.3 ASME-NQA-2-1989, *Quality Assurance Requirements for Nuclear Facility Applications*, Part 2.2, Section 3.

2.2.4 10 CFR 835, *Occupational Radiation Protection.*

2.3 Reference Documents/Drawings

2.3.1 24590-LAW-MKD-LVP-00011, Mechanical Data sheet for the LAW Melters Offgas Caustic Scrubber.

2.3.2 24590-WTP-3PS-G000-T0001, General Specification for Supplier Quality Assurance Program Requirements.

2.3.3 24590-WTP-3PS-G000-T0002, **Engineering** Specification for Positive Material Identification **(PMI) for Shop Fabrication**.

2.3.4 24590-WTP-3PS-G000-T0003, Engineering Specification for Packaging, Handling and Storage Requirements.

2.3.5 24590-WTP-3PS-MV00-T0001, Engineering Specification for Pressure Vessel Design and Fabrication.

2.3.6 24590-WTP-3PS-MV00-T0002, Engineering Specification for Seismic Qualification Criteria for Pressure Vessels.

2.3.7 24590-WTP-3PS-MV00-T0003, Engineering Specification for Pressure Vessel Fatigue Analysis

2.3.8 24590-WTP-3PS-FB01-T0001, Engineering Specification for Structural Design Loads for Seismic Category III & IV Equipment and Tanks.

2.3.9 24590-WTP-3PS-MVB2-T0001, Engineering Specification for Welding of Pressure Vessels, Heat Exchangers and Boilers.

2.3.10 24590-WTP-MV-M59T-00001, Pressure Vessel Tolerances Standard Details.

2.3.11 24590-WTP-MV-M59T-00007, Thermowell Connection Standard Details.

2.3.12 24590-WTP-MV-M59T-00009, Lifting Lugs Standard Details.

2.3.13 24590-WTP-MV-M59T-00010, Tailing Lug Standard Detail

2.3.14 24590-WTP-MV-M59T-00012, Grounding Lug Standard Details.

2.3.15 24590-WTP-MV-M59T-00016001, Vessel Connections Standard Details Sheet 1 of 3.

2.3.16 24590-WTP-MV-M59T-00016002, Vessel Connections Standard Details Sheet 2 of 3.

2.3.17 24590-WTP-MV-M59T-00016003, Vessel Connections Standard Details Sheet 3 of 3.

2.3.18 24590-WTP-MV-M59T-00017, Vessel Inspection Manway Standard Details.

2.3.19 24590-WTP-MV-M59T-00018, Vessel Name Plate Standard Details.

2.3.20 24590-WTP-MV-M59T-00026, Anchor Bolt Chair Detail for Vertical Vessels

2.3.21 24590-LAW-DB-S13T-00135, LAW Vitrification Building Main Building Partial Concrete Forming Plan Zone 5, ELEV +48'-0"

2.3.22 24590-LAW-DD-S13T-00019, LAW Vitrification Building Main Building Special Embed Plates

2.3.23 24590-LAW-DDC-S13T-00047, Anchorage Design for LAW Off Gas Caustic Scrubber

2.3.24 **24590-LAW-MKQ-LVP-00001**, Equipment Qualification Datasheet for LAW Melters Offgas Caustic Scrubber

2.3.25 24590-WTP-3PS-G000-T0019, Engineering Specification for Acquisition of Commercial Items and Services for use in Safety Applications at WTP

2.3.26 24590-WTP-3PS-G000-T0015, Engineering Specification for Environmental Qualification of Mechanical Equipment

3 Design Requirements

3.1 Basic Function

The LAW Melters Offgas Caustic Scrubber treats the offgas by removing SO_X gases and provides final offgas cooling. The offgas stream enters the bottom of the Scrubber and flows upward through a quench spray, then through a packed bed. Contaminants in the offgas stream are absorbed into the liquid stream through interaction of the gas, liquid, and packing media. The scrubber liquid flows downward through the packing bed then drains into the Caustic Collection Tank, LVP-TK-00001. The clean offgas is then discharged through a high efficiency mist eliminator internal to the scrubber to prevent carryover. After the Caustic Scrubber, the offgas is released to the facility stack.

A sodium hydroxide solution is added periodically to the Caustic Collection Tank to improve removal of acid gases. Process Service Water is added to the Caustic Collection Tank to maintain a specific gravity in the scrubbing solution consistent with a maximum of 10% dissolved solids. Dissolved solids content in the Caustic Collection Tank shall not exceed 10%

by weight. Out of specification liquid discharges to RLD system. Recirculation pump transfers solution from Caustic Collection Tank to the scrubber.

The Caustic Scrubber will have alarms and interlocks for high differential pressure and accumulation of liquid in the **lower head.**

3.2 General

3.2.1 As Low As Reasonably Achievable (ALARA) principles shall be applied to the design of the LAW Melters Offgas Caustic Scrubber per 10 CFR 835, Occupational Radiation Protection.

3.2.2 Seller shall design the LAW Melters Offgas Caustic Scrubber to the requirements of the following:

- This specification
- Applicable codes, standards, and documents in chapter 2 of this specification
- Reference 2.3.5 (Section 1.4 is not applicable.)
- The MDS **(Reference 2.3.1)**
- The MR.

3.2.3 The LAW Melters Offgas Caustic Scrubber, including the Packed Column and Dry Packing Mist Eliminator Section, shall be designed to operate continuously for a minimum service life of 40 years. Seller shall provide documentation, including but not limited to calculations and analyses, to support their design and performance of the equipment.

3.2.4 Seller shall refer to section 3.3 for design performance of the Scrubber. If specific components cannot meet the required service life of 40 years, they shall be identified, and a mechanism for their replacement and / or maintenance shall be incorporated into the design.

3.2.5 Seller shall provide a written performance guarantee for the LAW Melters Offgas Caustic Scrubber. This guarantee shall include, but not be limited to, process and design calculations that substantiate the performance of the equipment for a period of 40 years, (excluding consumables).

3.2.6 The main components of the LAW Melters Offgas Caustic Scrubber shall include, but shall not be limited to, the following:

- **Vessel mounting and support system**
- A vertical column consisting of the following:
  - An offgas inlet cooling and quenching system
  - A packed section (which may have one or more packed beds), random or structured, for offgas scrubbing
  - A liquid distribution system for the scrubbing solution above the packed section
  - A mist eliminator in the exit
  - Wash system for the mist eliminator and/or the packed section
  - Associated nozzles
  - Manway
  - Insulation Support Ring
  - Lifting Lugs.

- Tailing lug(s)
- Grounding Lugs.

Seller shall design, furnish and install all internals and their associated supports unless noted otherwise.

3.2.7 Seller shall identify all interfaces and requirements for external connections supplied by the Buyer. The type and location of interfaces shall be reviewed and approved by the Buyer prior to fabrication.

3.2.8 Seller shall design the LAW Melters Offgas Caustic Scrubber and its internals, particularly the packed sections, to meet the requirements of testing, packaging, shipping (in the vertical and horizontal positions), handling, storage, installation, and operation of the Scrubber.

3.2.9 **Refer to the MDS for** corrosion allowance.

3.2.10 Seller shall provide the Optimum Recirculation Flow Rate and Delivery Pressure at the Scrubber equipment nozzle needed by the Buyer to design and purchase the Offgas Caustic Scrubber Recirculation Pumps and Motors, LVP-PMP-00003A/B.

3.2.11 The Seller shall provide equipment reliability figures for all major components and sub-components of the Scrubber. The definition of components and sub-components is at the Seller's discretion. The reliability figures shall include, as a minimum, the following:

- Failure rate or mean time between failure (whichever is available)
- Estimated modes of failure (example, vessel failure, valve leakage, gasket failure, etc.). This may be delineated in a **Failure Modes and Effects Analysis (FMEA)**. The method used to perform the FMEA (example, MIL-STD-1629) and the year shall be specified. Also, all assumptions used to perform the FMEA shall be stated.
- Recommended maintenance and frequency.
- Estimated time to perform the recommended maintenance.

The data above shall be based on the physical and environmental conditions delineated in this specification and associated MDS **and EQD**. Where possible, the Seller shall compare the figures for the equipment in this specification to similar equipment sold and serviced by the Seller.

3.2.12 Seller shall provide the vessel **mounting and support system** as shown on the MDS.

3.2.13 Equipment Seismic Qualification shall be in accordance with the parameters of References 2.3.8 and 2.3.24.

3.3 Performance

3.3.1 Seller shall refer to the MDS for performance requirements and inlet offgas composition. Seller shall submit an updated MDS with the required Seller input for review by the Buyer per Form G-321-E of the MR.

3.3.2 Total SOx removal efficiency of 97% is required with the scrubber reagent between pH9 and pH14.

3.3.3 Seller shall recommend the optimum rate of recirculation for the scrubbing solution.

3.3.4 Seller shall determine the optimum operating pH range for the scrubbing solution to achieve the required performance while minimizing generation of dissolved solids.

3.3.5 The overall offgas pressure drop across the scrubber shall not exceed the maximum allowable pressure drop specified in the MDS.

3.3.6 The flooding percentage of the packed bed shall not exceed 60% at the recirculation rate in section 3.3.3.

3.3.7 Seller shall recommend any additional operating parameters that must be monitored for the Scrubber to achieve the required performance.

3.3.8 Seller shall provide detailed operating instructions, in the form of a manual or similar document, describing how to operate the Scrubber for all conditions (startup, normal, abnormal, shutdown) to achieve the required performance.

3.4 Design Conditions

3.4.1 Seller shall refer to the MDS for the allowable space envelope and design conditions of the LAW Melters Offgas Caustic Scrubber. Seller shall provide LAW Melters Offgas Caustic Scrubber dimensions as well as the dry, testing, and operating weights for the scrubber, and submit an updated MDS per Form G-321-E of the MR.

3.4.2 Deleted

3.4.3 Nozzle and manway design shall be in accordance with Reference 2.3.5. (Section 1.4 is not applicable.)

3.4.4 Nozzle loading and reinforcement requirements shall be in accordance with Reference 2.3.5 (Section 1.4 is not applicable.), and/or as specified on the MDS.

3.4.5 Lifting lug design shall be in accordance with Reference 2.3.12.

3.4.6 Tailing Lug design shall be in accordance with Reference 2.3.13.

3.4.7 Grounding lug design shall be in accordance with Reference 2.3.14.

3.4.8 Inspection manway design shall be in accordance with Detail 2 of Reference 2.3.18, Lifting eye shall be included for removal of the flange.

3.4.9 Deleted

3.4.10 Seller shall provide a nameplate for the Scrubber in accordance with Reference 2.3.19.

3.4.11 Seller shall furnish and install the insulation legs and Support Ring(s) as specified in Attachment A.

3.4.12 **Seller shall design, fabricate, and install scrubber anchor bolt chairs to secure the scrubber at 8 equally spaced locations starting at 22.5 degrees off Building North.** Anchor Bolt Chair design and fabrication shall comply with Reference 2.3.20, Detail 2E. Buyer will provide 1.5" diameter A193 threaded rod anchors (per Reference 2.3.23) at the above specified locations. Seller shall provide detailed fabrication drawings showing **anchor bolt chair design details. The anchor bolt chairs shall be modeled/analyzed to resist tensile loads only. Seller shall analyze/design the scrubber to resist lateral shear at 8 intermediate points between the anchor chairs. The lateral shear shall be resisted by bearing between the vessel base ring and shear bars. The shear bars will be welded on embeds which will be located at intermediate points between anchor chairs. A minimum bearing width of 6" between the shear bar and base ring is required.**

3.5 Equipment Environmental Qualification (EEQ)

3.5.1 See EQD (Ref 2.3.24) for environmental conditions.

3.5.2 Environmental qualification of the equipment will be performed by Buyer in accordance with requirements identified in this section. Seller is not required to perform any of the environmental qualification. Requirements in this section are not applicable to Seller.

3.5.2.1 Equipment covered under this specification shall be environmentally qualified in accordance with the Buyer's specification, 24590-WTP-3PS-G000-T0015.

3.5.2.2 The equipment shall be evaluated and accepted as suitable to operate in the environment specified on the EQD.

3.5.2.3 Equipment is considered to be qualified when it meets the performance parameters used to demonstrate that the equipment can perform its safety function for the bounding service conditions defined in the MDS and EQD.

3.5.2.4 Qualification documentation shall be compiled by the Buyer to provide evidence that the equipment is qualified for its application per 24590-WTP-DC-ENG-06-001. The documentation shall be organized in an understandable and traceable manner that is conducive to independent audits.

3.6 Loadings

3.6.1 Seller shall perform seismic analysis to meet with the requirements of Reference 2.3.6 and Reference 2.3.8.

3.6.2 Seller shall perform fatigue assessment / analysis in accordance with the requirements of Reference 2.3.7

3.6.3 For SC-III/IV equipment support, code evaluation of load bearing stainless steel components (Safety SC-III) shall be in accordance with ANSI/AISC N690-94. Code

evaluation of other load bearing steel components shall be in accordance with AISC M016-89.

3.7 Instrumentation and Control Requirements

3.7.1 Deleted

3.7.2 Seller shall provide a recommended set point for the maximum liquid level in the Scrubber that will not result in a restriction of the melter offgas release stream. Furthermore, the Seller shall provide recommended set points for any additional operating parameters identified per the requirements of Section 3.3.7.

3.7.3 Deleted

3.7.4 Deleted

3.7.5 Deleted

3.7.6 Deleted

3.8 Accessibility and Maintenance

3.8.1 Accessibility and maintenance requirements shall be per this specification and MDS.

3.8.2 The LAW Melter Offgas Caustic Scrubber will be located in an area that requires hands-on maintenance **by workers** in protective clothing **(i.e.,** gloves, **face shields,** respirators, **etc.).** The design shall accommodate such restrictions / limitations.

3.8.3 Seller shall design and install a wash system to clean the dry-packing and mist eliminator and packed sections, as and when required. Seller shall recommend the frequency and period of cleaning as preventive maintenance for the given duty conditions. The wash system will be supplied with Process Water. Process Water quality is specified on MDS.

3.8.4 Operations and Maintenance (O&M)-specific Seller data is required to support operations, maintenance, and training programs. Operations and Maintenance (O&M)- specific Seller data shall contain the following as a minimum:

3.8.4.1 *Operations and maintenance documentation* directory that includes a list of documents, components, subcomponents, etc. and a table of contents.

3.8.4.2 *General manual layout* that includes title page, table of contents, manual contents and Seller contact information (such as telephone, fax, email numbers).

3.8.4.3 *Deleted*

3.8.4.4 *Operations manual* for equipment that includes descriptive and control information, operating standards and codes, recommended personal protective equipment, operating

procedures, detailed assembly/disassembly drawings and assembly / disassembly instructions.

3.8.4.5 *Maintenance manuals* for the care and maintenance of products, materials, systems and equipment that include content divided into sections for each component / subcomponent, source information, product information, maintenance procedures, repair materials, and source including Seller service representative contact information, maintenance and service schedule, spare part list, and source information for special tools.

3.8.4.6 *Training material or media* that include information or instruction (course) from the manufacturers to use in training personnel to properly operate and maintain the equipment.

4 Materials

4.1 Construction

4.1.1 All materials of construction for the Scrubber shall conform to the requirements of:

- **ASME Section VIII, Div 1**
- This specification
- Reference 2.3.5 (Section 1.4 is not applicable.)
- Reference 2.3.3
- The MDS **(Reference 2.3.1)**
- The MR.

4.1.2 Seller shall provide Material Safety Data Sheets (MSDSs) **or certificate of compliance** for all materials **that come into contact with** the Scrubber.

4.1.3 Seller shall submit a table/spreadsheet of all components/parts that perform or support a safety function. Include both metallic and non-metallic components/parts. The list shall contain, at a minimum, the following information for each component/part:

- **Name / description**
- **Drawing number and item number on that drawing**
- **Material**
- **Safety function supported**
- **Role that component/part plays in support of the safety function**
- **Recommended maintenance/replacement frequency, if applicable, to maintain 40-yr life**

4.1.4 For components/parts identified in 4.1.3, Seller shall submit either PMI documentation in accordance with Reference 2.3.3, or vendor cut-sheet/datasheet information for items not subject to PMI.

4.1.5 Seller shall submit performance-based test results that validate the pressure boundary (confinement) safety function at operating conditions for components that are part of the pressure boundary but are not analyzed by the structural/seismic analysis, for example, gaskets.

4.2 Prohibited/Restricted Materials

4.2.1 **See Reference 2.3.5 Section 4 regarding** mercury and other low melting point metals.

4.2.2 **See Reference 2.3.5 Section 4 regarding the use of** sulfides and halides.

4.2.3 Asbestos shall not be included in any component of the Scrubber.

4.2.4 Carbon steel shall not be included in any component in contact with fluid and the vessel.

4.2.5 Deleted.

5 Fabrication

5.1 General

5.1.1 Fabrication of the Scrubber shall conform to the requirements of:

- This specification
- Reference 2.3.5 (Section 1.4 is not applicable.)
- The MR.

5.1.2 Fabrication tolerances shall conform to the requirements of ASME Boiler and Pressure Vessel Code, Section VIII, Division 1, *Rules for Construction of Pressure Vessels*, and Reference 2.3.10.

5.2 Welding

Welding of the Scrubber shall conform to the requirements of the documents listed in paragraph 5.1.1 of this specification and Reference 2.3.9.

6 Tests and Inspections

6.1 General

6.1.1 Seller shall conduct and be responsible for all testing and inspections of the Scrubber per the requirements of:

- This specification
- ASME Boiler and Pressure Vessel Code, Section VIII, Division 1, Rules for Construction of Pressure Vessels
- Reference 2.3.5 (Section 1.4 is not applicable.)
- The MR.

6.1.2 Seller shall submit a detailed inspection and testing plan. The plan shall identify all inspection and testing hold/witness points including the Buyer's hold/witness points. When the operation

requires a procedure, the procedure number shall be designated on the plan. In addition, Seller shall develop and submit detailed test and inspection procedures for conducting all testing and inspections required per this specification, applicable codes, standards, reference documents, and the test plan.

6.1.3 Seller shall complete and submit reports of all testing and inspections per Form G-321-V of the MR. **At a minimum,** reports shall identify the component tested or inspected, date performed, applicable procedures, acceptance criteria, person performing the test or inspection, results, and conclusions.

6.2 Non-Destructive Examinations

Nondestructive Examination requirements shall be in accordance with Reference 2.3.5. (Section 1.4 is not applicable.)

7 Preparation for Shipment

7.1 General

7.1.1 The Scrubber shall be prepared for shipment in accordance with:

- Reference 2.3.5 (Section 1.4 is not applicable.)
- Reference 2.3.4
- ASME-NQA-2-1989, Quality Assurance Requirements for Nuclear Facility Applications, Part 2.2, Section 3, Level D items.

7.1.2 Seller shall verify, by calculation, that the Scrubber and its internals will withstand loads occurring during shipping, handling, and installation.

7.2 Cleanliness

All equipment shall be thoroughly cleaned of all debris, trash, loose mill scale, tools, and foreign matter, and dried in preparation for shipment.

7.3 Tagging

All packages shall be clearly and suitably tagged to at least show the Seller's name, Buyer's name, plant item number, purchase order number, package contents, parts list (for each package), and handling instructions.

7.4 Documentation

All results of shop tests and inspections for the Scrubber shall be reviewed by the Buyer prior to preparing and packaging it for shipment.

7.5 Shipping, Handling, and Storage Instructions

Seller shall submit shipping weights as well as detailed shipping, handling, and storage instructions for the Scrubber prior to its shipment per **Reference 2.3.4 and** Form G-321-E of the MR.

8 Quality Assurance

8.1 QA requirements specific to item(s) or service

All items shall be manufactured in accordance with Seller's **Quality Assurance Program** that meets the requirements of ASME NQA-1-1989, and has been previously evaluated and accepted by the WTP Quality Assurance Organization.

8.2 Program QA elements

8.2.1 Seller's QAP requirements are specified in Reference 2.3.2.

8.2.2 Seller's QAP, as a minimum, shall contain the requirements detailed in the Supplier Quality Assurance Program Requirements data sheet listed in the MR.

8.2.3 Seller shall demonstrate that its quality program is in compliance with the procurement quality requirements listed in the Supplier Quality Assurance Program Requirements Data Sheet. Seller shall allow the Buyer, its agents, and DOE access to their facility and records pertaining to this purchase order for the purpose of QA audits and surveillance at mutually agreed times.

9 Configuration Management

9.1 The equipment covered by this specification is identified with the plant item number shown in the MDS. The equipment shall be identified in accordance with paragraph 7.3, Tagging, of this specification and Reference 2.3.19

9.2 Substitutions and deviations shall be in accordance with MR section 2.6.

10 Documentation and Submittals

10.1 General

10.1.1 Seller shall submit to Buyer all detailed designs, documentation, procedures, instructions, calculations, analyses, simulations, manufacturer data, inspection reports, test reports, certifications, operation and maintenance manuals (such as procedure, staffing, and training), spare part lists, MSDSs, and drawings; including as-built drawings required per this specification, its addenda, and attachments, the MR, and referenced codes, standards, and Buyer documents.

10.1.2 Seller shall submit to Buyer the Engineering and Quality Verification documents in the forms, quantities, and timeframes shown in Form G-321-E, *Engineering Document Requirements*, and Form G-321-V, *Quality Verification Document Requirements*, in Section 3 of the MR.

10.1.3 Each documentation transmittal package shall have a documentation inventory sheet attached listing all documents and the number of pages in each document.

10.2 Submittals

10.2.1 Drawings

Seller shall submit assembly/shop detail drawings for Buyer's review. In addition to the drawing requirements outlined in the G-321-E descriptions, assembly/shop detail drawings shall include the following as minimum information for each item, but not limited to the following list:

- Shell and head thickness
- Head type
- Shipping weight and test weight
- Center of gravity
- Lifting lugs
- Diameter and tangent-to-tangent dimensions, and appropriate anchorage or support details
- Nozzle schedule with nozzle marks and service conditions the same as the Bechtel data sheet
- Governing moment and shear for earthquake, as applicable
- Foundation and mounting details
- Materials and parts list with locations.

10.2.2 Manuals/Instructions

Seller shall submit to Buyer Erection/Installation Manuals/Instructions, Maintenance Manual/Instructions for review and comment. Refer to Form G-321-E for submittal schedule requirements.

10.2.3 Inspection and Test Reports

Seller shall submit completed reports per Section 6.1.4 of this specification and the G-321-V Form.

10.2.4 Calculations

10.2.4.1 Refer to this specification and Form G-321-E for required calculations. All calculations to be provided to the Buyer shall be orderly, complete, and sufficiently clear to permit verification. The body of the calculations shall include:

- Objective
- Inputs

- Background
- Applicable Code and Standards
- Methodology
- Assumptions, if required. The calculation shall not contain any assumptions that require verification; Seller shall close all assumptions.
- Calculation.
- Results and Conclusion
- References
- Attachments
- The computer programs, if required, shall including the following information:
    - Input and Output
    - Detail description of the program (by inclusion or by reference)
    - Program name
    - Program version/release used

10.2.4.2 The units of measure to be used for this project are US customary units, not imperial or metric units. Calculations customarily performed using other units and/or software applications that use these units as their normal practice are acceptable for project use. The result of those analyses must be converted to US customary units.

10.2.5 Certificates of Conformance

Seller shall submit per Section 1.2.2 of this specification.

10.2.6 Schedules

A detailed schedule of engineering, document submittals, material purchases, fabrication, shop tests, and shipment shall be submitted using Form 15EX per Section 3 of the MR.

Attachment A

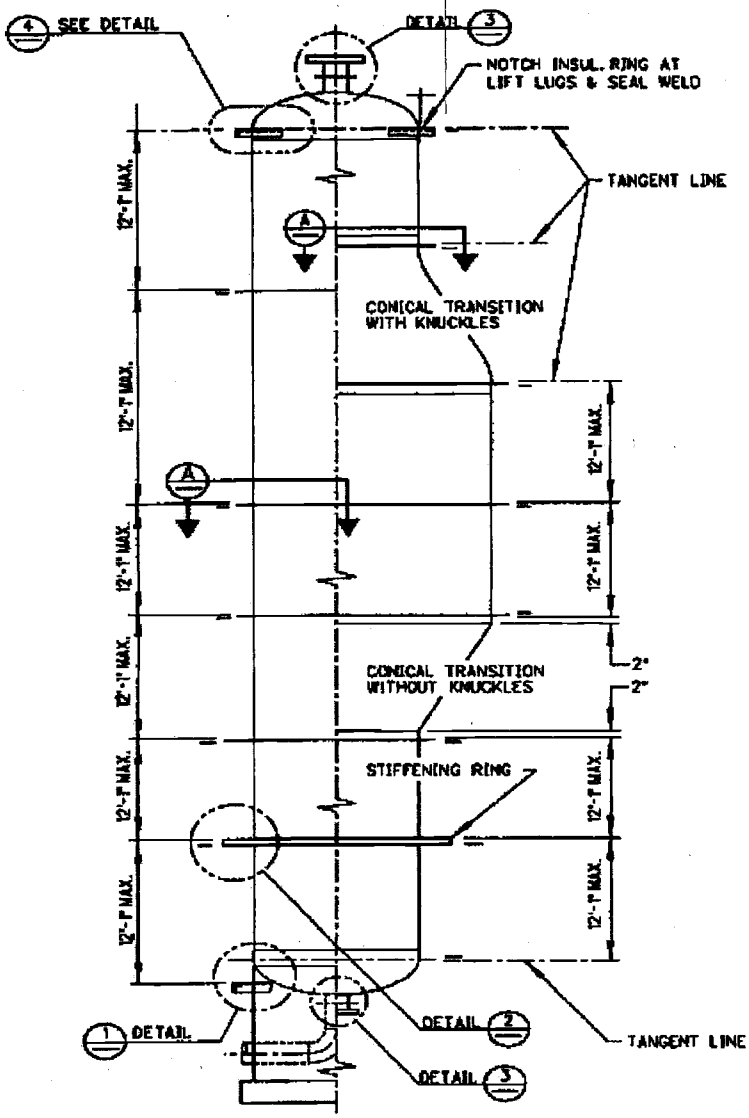

INSULATION SUPPORT DETAIL

NOTES: 1) Insulation thickness ("t") will be specified on the Mechanical Data Sheet.
2) Insulation thickness does not include the weather protection jacket.
3) Material: as noted on the Mechanical Data Sheet.
4) The term "skirt" is **interchangeable with** "leg supports".
5) This typical detail may not depict the exact configuration – shown to account for all **potential** configurations **for any vessel that requires insulation.**

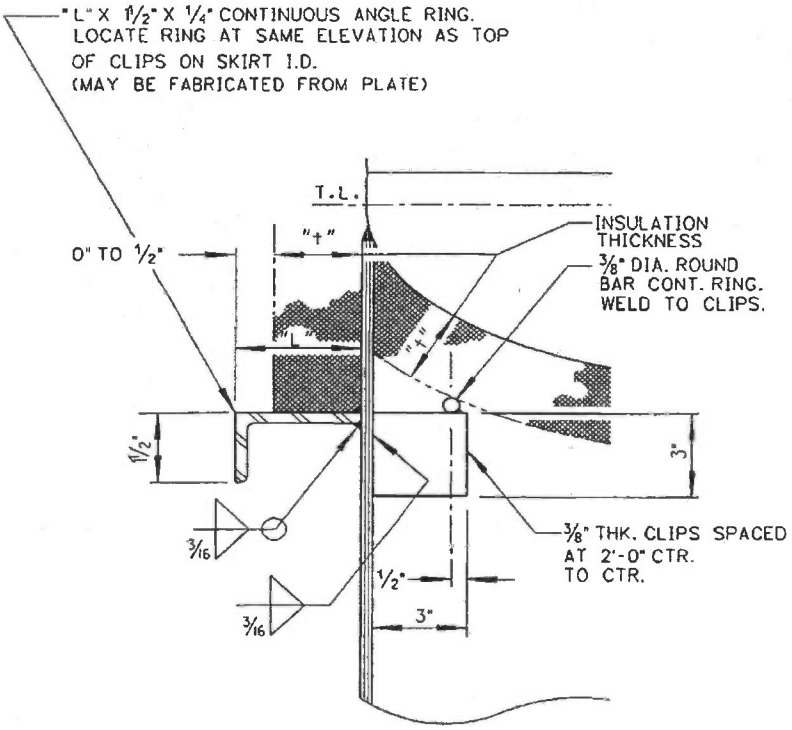

DETAIL 1
TYPICAL VESSEL
SKIRT INSULATION

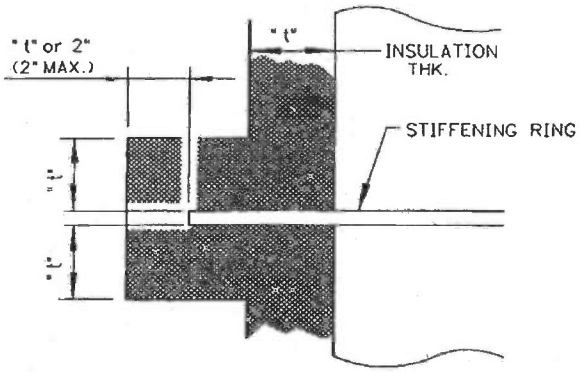

DETAIL 2
INSULATION AROUND
STIFFENING RING

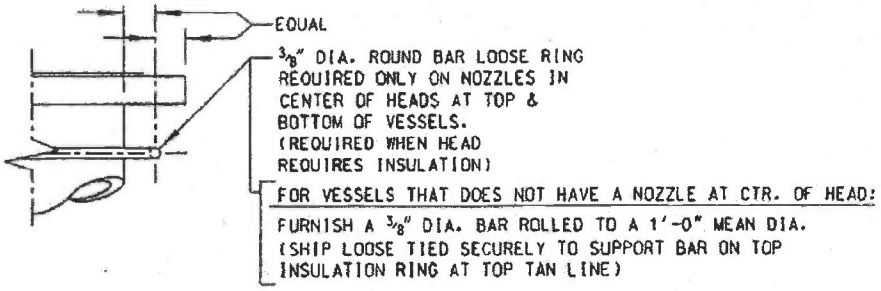

DETAIL 3

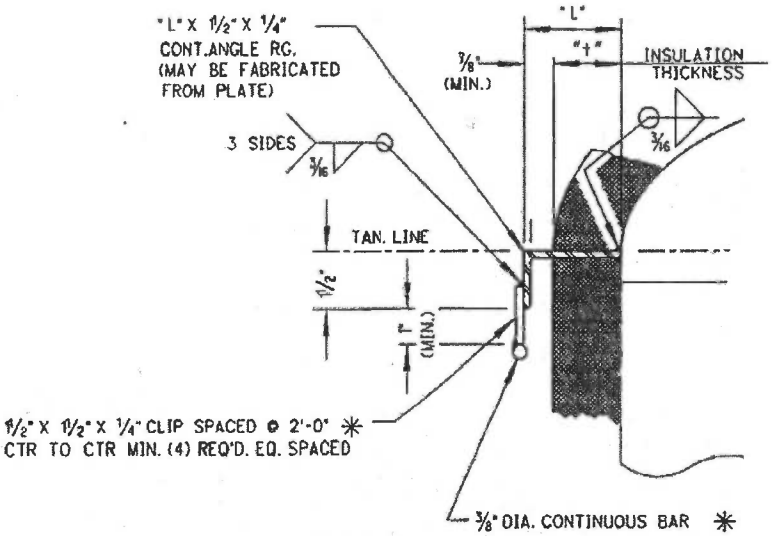

✳ REQUIRED ONLY WHEN TOP HEAD IS INSULATED

DETAIL 4
TOP RING FOR

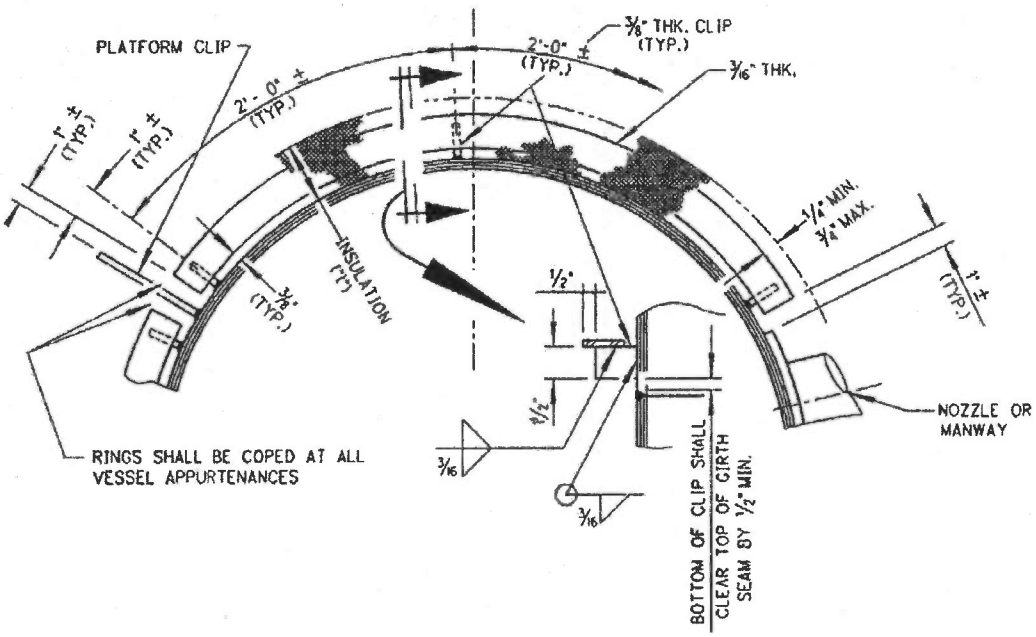

SECTION A
TYPICAL VERTICAL VESSEL INSULATION SUPPORT RING

ISSUED BY
RPP-WTP PDC

R11713483

RIVER PROTECTION PROJECT – WASTE TREATMENT PLANT

ENGINEERING SPECIFICATION

FOR

Positive Material Identification (PMI) for Shop-Fabrication

Content applicable to ALARA? ☐ Yes ☒ No

ADR No.
NA

Rev
NA

Specification changes retroactive? ☐ Yes ☒ No
☐ N/A (alpha revision or revision 0)

NOTE: Contents of this document are Dangerous Waste Permit affecting.

Quality Level
Q
DOE Contract No. DE-AC27-01RV14136

REV	DATE	BY	CHECK	AUTHORIZATION	AUTHORIZATION	APPROVER
9	4/8/15	DLAdler	RBDavis	NA	NA	
8	1/4/10	DLAdler	RBDavis	SWVail (Review)	RCarlstrom	DJWilsey
7	5/26/05	DLAdler	APRangus	SWVail (Review)	NA	SWVail for MHoffmann
6	10/4/04	DLAdler	APRangus	SWVail (Review)	NA	MHoffmann
5	11/12/03	DLAdler	SWVail	APRangus (Review)	NA	MHoffmann for GDuncan
4	4/1/03	DLAdler	HKrafft	SWVail (Review)	NA	MHoffmann for GDuncan
3	3/19/03	DLAdler	HKrafft	SK	NA	MHoffmann for GDuncan
2	1/25/03	DLAdler	HKrafft	NA	NA	MHoffmann for GDuncan
1	8/19/02	DLAdler	GSingh	NA	NA	BRao for GDuncan
0	4/22/02	DLAdler	SAtri	NA	NA	GDuncan

SPECIFICATION No.
24590-WTP-3PS-G000-T0002

Rev
9

Revision History

Revision	Reason for Revision	Q Specification Revision Only Margin Reduced?		CM Only
		YES	NO	N/A
0	Issue for Purchase	N/A	N/A	N/A
1	Revised to clarify wording of Field PMI Requirement. (Change not retroactive)	☐	☒	☐
2	Sect 4.2.1: Revision per SDDR 24590-WTP-SDDR-PROC-02-0151, 24590-WTP-SDDR-PROC-02-0152, 24590-WTP-SDDR-PROC-02-0161, 24590-WTP-SDDR-PROC-02-0162. Alternative marking method. Sect. 4.4: Correct and further define limitations on marking materials (Changes not retroactive)	☐	☒	☐
3	Sect. 2.2/2.4/3.1: Editorial Sect 2.3.2: Update analyzers available; correct in-document reference Sect. 3.3.1: Correct Pipe Class Sect: 3.3.2: Update Black Cell Rooms Sect: 6/6.3: Correct in-document references Sect. 7: SDDR: 24590-WTP-SDDR-PROC-02-0124 Incorporated by reference. Revision 2 Reason for Revision: Sect 4.2.1 should be Sect. 4.1. Sect. 4.4 should be Sect. 4 (Changes not retroactive)	☐	☒	☐
4	Editorial changes Sect. 3.3.1/3.3.2: eliminate reference to specific Pipe Classes. Modify text to clarify requirement. Sect. 6: include 304 in the element identification table. Table 1: amend 304/304L exclusion statement. Sect. 7: remove "new" designation of SDDR incorporated by reference (Changes not retroactive)	☐	☒	☐
5	Editorial changes to clarify intent. Section 2: added Applicable Document Sect. 3.3.2.a: include additional approved analyzer Sect. 3.3.4/5.3: include info regarding small parts/fasteners Sect. 4.2: extensive revision of requirements for piping Sect. 5.2: additional approved marking method Section 7: clarification of weld composition requirements Section 8: revised to include change documents incorporated by reference Incorporate 24590-WTP-FCR-P-03-046 Extensive revision of Table 1 - PMI Requirements Added Table 2 Systems, Facilities and Fluid Codes Requiring PMI Testing	☐	☒	☐

		Q Specification Revision Only Margin Reduced?		CM Only
	Added Table 3 – Base Material and Weld Filler Metal Composition Requirements (Changes not retroactive)			
6	Incorporate 24590-WTP-3PN-G000-00006, -00007, -00008 and -00009. Incorporate 24590-WTP-SDDR-PROC-03-0415, and 24590-WTP-SDDR-PROC-04-00023 Eliminate field PMI requirements, section 4.3. Re-title to specify "SHOP FABRICATION" Clarify wording in sections 3.1, 3.3.4, 4.2.1, 6.e and 7.1. Revise section 8 – incorporate SDDRs by reference (Changes not retroactive)	☐	☒	☐
7	Incorporate SCNs: 24590-WTP-3PN-G000-00012, 24590-WTP-3PN-G000-00015, 24590-WTP-3PN-G000-00016, and 24590-WTP-3PN-G000-00019. Incorporate SDDRs by reference into section 8 Add section 2.1.2, reference document Expand Table 3 to include additional base material/weld filler material combinations. Revise section 3.1 to include additional definition. Revise section 7 table and Table 1 to include additional materials. (Changes not retroactive)	☐	☒	☐
8	Revision to incorporate already approved change documents. Incorporate 24590-WTP-SDDR-PL-09-00054, 24590-WTP-SDDR-PL-08-00071, 24590-WTP-SDDR-ML-05-00055, 24590-SDDR-M-05-00466, 24590-WTP-FC-P-08-0253 Incorporate 24590-WTP-3PN-G000-00026 – Modify Table 1 – Alloy piping section Incorporate 24590-WTP-3PN-G000-00031 All instances of "black cell" throughout are modified to "black cell and hard-to-reach areas". Section 1/Paragraph 3.1 – remove "in contact with process fluids". Paragraph 3.1 – definition of "black cell" and "hard-to-reach areas" (editorial modification to SCN) Section 4 title modified Paragraph 4.2.1 – include non-autogenous longitudinal weld requirement Modify Table 1 alloy piping and pressure-retaining welds section and notes. Paragraph 3.3.2.a – include X-Met 3000TA as an acceptable analyzer Paragraph 3.3.2.b – include SpectroLab as an acceptable analyzer. Table 3 – include additional base metal/weld filler combinations. Section 8 – remove asterisk from SDDRs previously listed. Add new Incorporate by Reference SDDRs. (Changes not retroactive)	☐	☒	☐

		Q Specification Revision Only Margin Reduced?		CM Only
9	Revision incorporates 24590-WTP-3PN-G000-00055 (as modified). Change notice was written to include excessive fluid codes; fluid codes added as shown below. SDDRs Incorporated by Reference added to Section 8 Section 3.1 – Extensive modification of text with the intent to improve clarity; no change to requirements. (Change not retroactive) Section 3.3.2 – Update the list of acceptable analyzers. (Change not retroactive) Section 4.5 – Modified to emphasize that Table 2 does not apply. (Change not retroactive) Section 6 – PMI map requirements clarified to incorporate content of 24590-WTP-3PN-G000-00055, which closed an action of 24590-WTP-PIER-MGT-11-0836. (Change not retroactive) Section 7 – Emphasize that Table 3 is for dissimilar welds only. (Change not retroactive) Tables 1 & 2 – Revised to remove references to "systems". PMI in accordance with Table 2 will now be by fluid codes only, not by system/fluid code combination. (Changes not retroactive) Table 2 – Additional fluid codes are added: DR, Suspect Radioactive Steam; GU, Nitric Acid Fume; HN, Nitric Acid; HR, Recovered Nitric Acid; RK, Sodium Permanganate; ZE, Plant Wash Fluid; ZX, Special Decontaminant. Extent of impact of this change is evaluated under ACT 12-24590-WTP-PIER-MGT-13-0719-B; change is not retroactive. Table 3 – Additional base metal/weld filler combinations added. (Changes not retroactive) Sections 4.2.1, Table 1 (Alloy Piping), and Table 1 notes modified to provide clarification for examination of tubing and instrumentation Examination requirements are not modified; change not retroactive.	☐	☒	☐

Notice

Please note that source, special nuclear, and byproduct materials, as defined in the Atomic Energy Act of 1954 (AEA), are regulated at the US Department of Energy (DOE) facilities exclusively by DOE acting pursuant to its AEA authority. DOE asserts, that pursuant to the AEA, it has sole and exclusive responsibility and authority to regulate source, special nuclear, and byproduct materials at DOE-owned nuclear facilities. Information contained herein on radionuclides is provided for process description purposes only.

Contents

Notice iv

1 Scope 1

2 Applicable Documents 1

2.1 Reference Documents/Drawings 1

3 Technical Requirements 1

3.1 General 1

3.2 Responsibility 2

3.3 Verification Method 2

3.4 Welding Consumable Control 3

4 Extent of PMI 3

4.1 Vessels, Exchangers, Tanks, Filters and other Manufactured Equipment 3

4.2 Shop Fabricated Piping 3

4.3 Deleted 4

4.4 Valves and Pumps 4

4.5 Bulk Materials (Straight Run Piping, Fittings, Stock Valves, Etc.) 4

5 Identification 4

5.1 General 4

5.2 Marking Materials 4

5.3 Equipment and Equipment Components 4

5.4 Piping Materials 4

5.5 Fasteners and Small Parts 4

6 Records of PMI 5

7 Acceptance, Rejection and Retesting Requirements 5

8 Design Changes Incorporated by Reference 9

Tables

Table 1 PMI Requirements for Shop Fabricated Items/Pieces 6

Table 2 Fluid Codes Requiring PMI Testing (Shop Fabricated Piping and Piping System Components) 8

Table 3 Base Material and Weld Filler Metal Composition Requirements (Wt %) 8

1 Scope

This Specification covers the minimum requirements for and the extent of application of Positive Material Identification (PMI) testing of shop fabricated pressure retaining equipment and piping. This Specification applies to shop fabrication only. For field-fabrication requirements, see 24590-WTP-3PS-G000-T0010.

2 Applicable Documents

2.1 Reference Documents/Drawings

2.1.1 Deleted

2.1.2	24590-WTP-3PS-G000-T0010	Engineering Specification For Positive Material Identification (PMI) For Construction

3 Technical Requirements

3.1 General

The purpose of PMI is to provide evidence that the materials are correctly supplied as specified by project documents. Specifically, within the black cell and hard-to-reach areas, PMI is required for all fluid codes. Outside the black cell and hard-to-reach areas, PMI is required for shop-fabricated items fabricated from the alloys identified in Table 1.

When required by this specification, PMI testing will be done on each component of a pressure retaining assembly. This shall include each individual segment of pipe, each plate, and all other pieces of base materials (e.g., forgings, fittings, and tubing) and all required pressure retaining welds.

For purposes of this Specification, the following definitions are used:

Alloy: Metallic materials (including welding filler materials) which contain alloying elements including but not limited to: Chromium (Cr), Nickel (Ni), Molybdenum (Mo), Copper (Cu) or Tungsten (W).

300 Series Stainless: Austenitic Stainless Steels (304L, 316L, etc.)

6 % Mo: AL6XN, 254 SMO, etc.

Duplex Stainless Steel: CD4MCu, etc.

Nickel Base: Alloy C-22, 625, 690, etc.

Black Cells: Closed cells where access is not planned during facility operation or scheduled shutdown periods. In black cells, inspection, maintenance, repair, or replacement of equipment or components is impracticable because no engineered access openings are provided for any of those purposes. The room numbers of the black cells, located in the PTF and HLW facilities are:

Room Numbers P-0102, P-0102A, P-0104, P-0106, P-0108, P-0108A, P-0108B, P-0108C, P-0109, P-0111, P-0112, P-0113, P-0114, P-0117, and P-0117A in the PTF Building

Room numbers H-B005, H-B014, and B-B021 in the HLW Building

Hard-To-Reach Areas: Facility areas located in the rooms listed below where piping and equipment is not designed for manual or remote access, replacement, or repair. Hard-to-reach piping extends out to the first accessible weld:

PTF Facility Room P-B001, P-B001A, P-B002, B-B003, P-B004, P-0123 (piping out to jumper nozzles), P-0123 (components above crane), P-0123A (components above crane), P-0335 (components out of reach of crane and below the filter deck), and P-0335A (components out of reach of crane and below the filter deck).

HLW Facility Room H-B005A, H-B015, H-B032, HCH14, HCH15, H-0104 (components out of reach of crane and below filter deck), H-0115, H-0121, H-0136 (components out of reach of crane or below canister racks or weld table), H-0302, and H-0308.

3.2 Responsibility

The Seller shall submit to the Buyer, for review and comment prior to fabrication, procedures covering how PMI will be conducted and documented. The Seller's procedures shall include the instrument manufacturer's procedures and requirements, operator qualification/re-qualification requirements, instrument calibration method(s), calibration frequency during testing, criteria for acceptance or rejection, material identification method, and record keeping.

3.3 Verification Method

3.3.1 Instruments used for PMI shall be of the type that will provide quantitative, recordable, elemental composition results for positive identification of the alloy elements present.

a PMI shall be done per the procedures outlined by the manufacturer of the PMI instrument being used. Modification of these procedures must be approved by the Buyer.

b Each PMI instrument shall be calibrated according to the manufacturer's requirements.

3.3.2 The methods/instruments listed below are acceptable. In application, they must not be used in a "go-no-go" mode. The only acceptable objective is the positive identification, listing, and quantification of the relevant elements listed in Section 7.

a Portable X-ray fluorescence analyzers. Use is limited to the following instruments or their equivalent unless prior approval is given by the Buyer:

- TN Technologies Alloy Analyzer 9266, 9277 (The Metallurgist XR) or 9288
- Outokumpu X-Met 840, or X-Met 880
- Niton Alloy Analyzer (800 Series)
- Thermo Scientific Niton XL3t Analyzer
- Metorex X-Met 920, X-Met 3000TA or X-Met 3000TX Metal Analyzer
- Innov-X Systems XT Series Analyzer
- Innov-X Systems Alpha 6500 Series Analyzer
- Innov-X Systems Delta Model DP-2000, DS-2000, or DC-200 Analyzer

b Portable optical emission analyzers. Use is limited to the following instruments or their equivalent unless prior approval is given by the Buyer:

- SpectroPort Model TP-07 or TFO-02
- Outokumpu ARC-MET 900 or the New Spectrotest
- SpectroLab, Spectrotest and Spectrotest Jr.

Any other instrument will require Buyer's approval via the submittal process.

Note: Arc strikes, if any, need not be removed.

3.3.3 In lieu of using portable instruments, chemical analysis can be performed on actual material samples. Care must be exercised while collecting samples, as contamination can be contributed by the removal tools. Sample extraction shall not weaken or reduce the functionality of the component. Laboratory analysis reports shall be traceable to the individual component from which the sample was taken (See Section 6, below).

3.3.4 Parts that are too small to be tested using an alloy analyzer are exempt from PMI testing. If such exemption is claimed, the PMI procedure shall specify the minimum part size capable of being tested.

3.4 Welding Consumable Control

In addition to PMI testing required by this Specification, the Seller shall have in place, and implement, welding consumable material control systems that can be verified by auditing. PMI of completed pressure retaining welds is required as indicated in Table 1. Production "Run Off" weld test coupons may be used for chemical analysis checks.

4 Extent of PMI

PMI shall be performed on completed equipment, or assembled parts of equipment, at such time as to ensure that only verified materials have been used in the fabrication and final assembly of components. If the assembled equipment configuration prevents PMI of any individual part, then that part shall be tested prior to assembly and be noted as such on the PMI documentation.

4.1 Vessels, Exchangers, Tanks, Filters and other Manufactured Equipment

Vessels, exchangers, and other manufactured equipment shall have PMI testing performed at the Seller's facilities. This shall include piping and components supplied as part of an equipment "package" or skid.

4.2 Shop Fabricated Piping

4.2.1 PMI is required for all piping and piping components, circumferential pressure retaining welds, and non-autogenous longitudinal welds as indicated in Tables 1 and 2. Note that to the greatest extent possible (considering minimum size restraints of the PMI analyzer), the requirements for examining tubing are equivalent to that of piping.

4.2.2 PMI is not required on autogenous welds, fillet welds, or socket welds.

4.3 Deleted

4.4 Valves and Pumps

PMI of valves and pumps is required for materials as indicated in Table 1 and piping fluid codes as indicated in Table 2.

4.5 Bulk Materials (Straight Run Piping, Fittings, Stock Valves, Etc.)

PMI is required as indicated in Table 1. Table 2 does not apply.

5 Identification

5.1 General

All shop-fabricated items/pieces that have been successfully subjected to the required PMI shall be marked. The mark shall be durable and last through transportation and receiving inspection at the Buyer's facility. See Section 7 for items that do not pass PMI.

5.2 Marking Materials

Marking materials and adhesive tape selected shall not cause corrosion or other harmful effects. Requirements for marking materials:

- The total chloride/flouride content shall not exceed 200 ppm.
- The total sulfur content shall not exceed 400 ppm.
- The total of low melting point metals such as lead, zinc, copper, tin, antimony, and mercury shall not exceed 1 percent; of this, mercury shall not exceed 50 ppm.

5.3 Equipment and Equipment Components

When it has been verified that the material has a composition consistent with the material specified, then it must be stamped with letters "PMIV". Use low stress stamps for identification. Items that cannot be stamped shall have an alternate system of marking. Heat exchanger tubing shall not be stamped. Any alternate system, and the items for which it will be used, must have Buyer approval. To the maximum extent possible, the stamping/marking shall be located for ease of future reference/verification.

5.4 Piping Materials

When it has been verified that the material has a composition consistent with the material specified, then a colored adhesive tape, or other approved marking method, shall be applied at one end to facilitate proper identification.

5.5 Fasteners and Small Parts

Fasteners and small parts shall be marked in accordance with the Seller's procedure using a hard marking method, an indelible ink, or paint.

6 Records of PMI

Results shall be recorded on PMI report forms, which shall indicate, as a minimum, the following for each examination:

a Name of inspector

b Date of testing

c Test method, including PMI instrument name and serial number

d Equipment tag number or pipe spool number (PO number for bulk items) for the specific piece tested

e Quantitative analysis results for relevant elements (see Section 7)

A PMI map consisting of assembly and sub-assembly drawings shall be prepared for each piece of fabricated equipment or pipe spool. The map shall include components and welds and show the locations of PMI testing.

An extended Shop Spool Sheet shall be provided for each individual spool number where PMI was done.

In the case of bulk items, PMI results may be submitted in the form of a certificate verifying that parts were tested according to the requirements of this specification. Results shall be reported by heat/lot and shall include the following:

a Name of inspector

b Date of testing

c Test method, including PMI instrument name and serial number

d Type and number of pieces tested

e Acceptable composition ranges for the relevant elements (see Section 7)

f Material identified

PMI forms shall become a part of the permanent inspection records. Seller shall submit the completed forms as part of the Final Document Package when required by the Form G-321-V in the Purchase Order.

7 Acceptance, Rejection and Retesting Requirements

All materials tested shall be identified by the PMI instrument as being consistent with the composition of the specified material. The results shall fall within the chemical composition requirements of the ASTM, AWS or other applicable material specification allowing for the accuracy of the instrument. Any questionable PMI result shall be re-analyzed by the same or another instrument, after verification of proper surface preparation. See Section 7.1, below, for materials and welds that fail to meet requirements on the second analysis.

The following elements shall be identified and recorded, even if the instrument does provide immediate identification (e.g. display of "316", "6 Mo", etc.):

Alloy	Elements
304, 304L	Ni, Cr
316, 316L	Ni, Cr, Mo
347	Ni, Cr, Nb
Duplex, 6% Mo, 254 SMO, AL6XN, etc.	Ni, Cr, Mo, Cu
Nickel base alloys, C-22, 625, 690, etc.	Ni, Cr, Mo, W

Welds joining dissimilar base materials or having filler materials that do not match the base material composition may include an allowance for dilution. Acceptable composition ranges for commonly used combinations of base material and weld filler metals are included in Table 3. Other combinations, when required, shall be identified to the Buyer for approval. Please note that the only proper use of Table 3 is for assessing dissimilar welds.

7.1 If any material, component, or weld of a type not requiring 100% testing is found to be unacceptable, all other materials, components, or welds (same heat, lot, etc.) represented by that failed item shall be considered suspect. The Buyer shall be notified immediately if a component is confirmed to have failed the PMI. The Seller will then have the following options, with Buyer concurrence:

a Scrapping/removing all materials, components, or welds represented by the test piece (all of that heat, lot, etc.) and replacing with new components or filler metals, or

b Performing 100 percent examination of the remainder of the represented materials, components, or welds, and replacing each item that fails the PMI check, or

c Verifying correct chemistry by laboratory chemical analysis.

7.2 If questionable values obtained with portable analyzers are verified by laboratory analysis, the laboratory analysis data shall be used and recorded.

7.3 Any item or component containing materials that have not passed the PMI shall be clearly marked as "DO NOT USE – PMI FAILED" and segregated from the remainder of the stock.

Table 1 PMI Requirements for Shop Fabricated Items/Pieces

ITEM - (Note 1)	VERIFICATION REQUIRED
Type 304 & 304L Stainless Steel Components	Yes – 100 % when in black cell and hard-to-reach areas
Type 316, 316L, & 347 Stainless Steel Components	Yes -- 100 %
6% Mo Components	Yes – 100 %
Duplex Stainless Steel Components	Yes – 100%
Nickel Base Alloy Components	Yes – 100 %
Alloy Valves	Yes – 100 % Body and Bonnet Only
Alloy Pumps	Yes – 100 % Casing Only

Table 1 PMI Requirements for Shop Fabricated Items/Pieces (cont.)

ITEM - (Note 1)	VERIFICATION REQUIRED
Alloy Piping – including non-autogenous longitudinal welds (Spools, Jumper Pipes, Fittings, Straight-Run Pipe, and Tubing)	Yes – 100 % for 6 % Mo alloys, Nickel base alloys and all Jumper Pipes Yes -- 100 % for 316L used in black cell and hard-to-reach areas irrespective of fluid code (Table 2 is NOT applicable) Yes -- 100 % for 316L used in the fluid codes listed in Table 2 outside black cell and hard-to-reach areas Yes – 100 % for 304L used in black cell and hard-to-reach areas irrespective of fluid code (Table 2 is NOT applicable)
Alloy Pressure Retaining Welds	Yes – 100 % of completed welds that join material required to have PMI testing
Bolting – B8M used for Pressure Retaining Connections	Yes – 5 % of total bolts, minimum one check per heat
Alloy Heat Exchanger Tubing	Yes – 5 % of total tubes, minimum one check per heat
Venturis	Yes – 100 % pipes and welds

Note:

1. The following items are exempted unless specifically designated for PMI by the Purchase Order:
   - a All type 304L stainless steel components, piping, and welds, except for those located in black cell and hard-to-reach areas
   - b Deleted
   - c Non pressure-retaining parts, such as baffles, trays, tray clips, supports, pall-rings, support rings, etc.
   - d Non pressure-retaining welds and sections of piping, such as drains, vents, overflows, etc.
   - e Gaskets
   - f Instrumentation (except when in black cells or hard-to-reach areas, or when the instrument is a shop fabricated piping component placed in-line of a piping system requiring PMI)
   - g Internal instruments parts (including pressure retaining parts)
   - h Instrument tubing less than 1/2 inch in diameter (except when in black cells and hard-to-reach areas)
   - i HVAC ducting
   - j Piping components located within piping systems for which PMI is NOT required.

Table 2 Fluid Codes Requiring PMI Testing (Shop Fabricated Piping and Piping System Components)

Fluid Code		Fluid Code		Fluid Code	
DR	Suspect Radioactive Steam	GU	Nitric Acid Fume	GV	Vessel Vent Radioactive
HN	Nitric Acid	HR	Recovered Nitric Acid	PA	Radioactive Aqueous
PB	LAW Feed	PC	HLW Feed Slurry	PE	Entrained Solids Concentrate
PF	Cs/Tc Concentrate	PH	LAW Melter Feed	PJ	HLW Melter Feed
PP	Ultrafilter Permeate	PR	Suspect Radioactive Liquid	PS	Suspect Radioactive Slurry
PU	Suspect Radioactive Gas/Vapor	PV	Strontium Carbonate	PW	Radioactive Gas/Vapor
PX	Radioactive Slurry	PZ	Waste Feed	RK	Sodium Permanganate
ZE	Plant Wash Fluid	ZF	Plant Washings	ZH	Acidic Effluent
ZJ	Alkaline Effluent	ZL	Spent IX Resin	ZN	Neutralized Effluent
ZR	Suspect Radioactive Condensate	ZS	Process Radioactive Condensate	ZX	Special Decontaminant
ZY	Scrubber Effluent				

Table 3 Base Material and Weld Filler Metal Composition Requirements (Wt %)

MATERIAL	Cr	Ni	Mo	Cu	W	Notes
304L BM	18.0 - 20.0	8.0 - 12.0	---	---	---	
308L WFM	19.5 - 22.0	9.0 - 11.0	0.75 max	---	---	E/ER308L & LT
304L Welds	18.0 - 22.0	8.0 - 12.0	0.75 max	---	---	Note 1
304L BM	18.0 - 20.0	8.0 - 12.0	---	---	---	
316L BM	16.0 - 18.0	10.0 - 14.0	2.0 - 3.0	---	---	
316L WFM	17.0 - 20.0	11.0 - 14.0	2.0 - 3.0	---	---	E/ER316L & LT
304L/316L Welds	16.0 - 20.0	8.0 - 14.0	3.0 max	---	---	Note 1
304L BM	18.0 - 20.0	8.0 - 12.0	---	---	---	
316L BM	16.0 - 18.0	10.0 - 14.0	2.0 - 3.0	---	---	
308L WFM	19.5 - 22.0	9.0 - 11.0	0.75 max	---	---	E/ER308L & LT
304L/316L Welds	16.0 - 22.0	8.0 - 14.0	3.0 max	---	---	Note 1
304L BM	18.0 - 20.0	8.0 - 12.0	---	---	---	
308L WFM	19.5 - 22.0	9.0 - 11.0	0.75 max	---	---	E/ER308L & LT
CD4MCu BM	24.5 - 26.5	4.75 - 6.0	1.75 - 2.25	2.75 - 3.25	---	
304L/CD4MCu Welds	18.0 - 26.5	4.75 - 12.0	2.0 max	---	---	Note 1

Table 3 Base Material and Weld Filler Metal Composition Requirements (Wt %) (cont.)

MATERIAL	Cr	Ni	Mo	Cu	W	Notes
316L BM	16.0 - 18.0	10.0 - 14.0	2.0 - 3.0	---	---	
316L WFM	17.0 - 20.0	11.0 - 14.0	2.0 - 3.0	---	---	E/ER316L & LT
316L Welds	16.0 - 20.0	10.0 - 14.0	2.0 - 3.0	---	---	Note 1
316L BM	16.0 - 18.0	10.0 - 14.0	2.0 - 3.0	---	---	
316L WFM	17.0 - 20.0	11.0 - 14.0	2.0 - 3.0	---	---	E/ER316L & LT
CD4MCu BM	24.5 - 26.5	4.75 - 6.0	1.75 - 2.25	2.75 - 3.25	---	
316L/CD4MCu Welds	16.0 - 26.5	4.75 - 16.0	1.75 - 3.0	---	---	Note 1
AL6XN BM	20.0 - 22.0	23.5 - 25.5	6.0 - 7.0	0.75 max	---	
625 WFM	20.0 - 23.0	58.0 min	8.0 - 10.0	0.50 max	---	E/ERNiCrMo-3
AL6XN Welds	20.0 - 23.0	25.5 min	7.0 - 10.0	0.75 max	---	Note 2
C-22 BM	20.0 - 22.5	Remainder	12.5 - 14.5	---	2.5 - 3.5	
CD4MCu BM	24.5 - 26.5	4.75 - 6.0	1.75 - 2.25	2.75 - 3.25	---	
C-22 WFM	20.0 - 22.5	Remainder	12.5 - 14.5	0.5 max	2.5 - 3.5	E/ERNiCrMo-10
C-22/CD4MCu Welds	16.0 - 22.5	25.0 min	10.5 - 14.5	---	2.5 - 4.5	
C-22 BM	20.0 - 22.5	Remainder	12.5 - 14.5	---	2.5 - 3.5	
C-22 WFM	20.0 - 22.5	Remainder	12.5 - 14.5	0.5 max	2.5 - 3.5	E/ERNiCrMo-10
C-22 Welds	20.0 - 22.5	52.0 min	12.5 - 14.5	---	2.5 - 3.5	Note 1
Alloy 625 BM	20.0 – 23.0	58.0 min	8.0 – 10.0	---	---	
to 304L	18.0 - 20.0	8.0 - 12.0	---	---	---	
to 316L	16.0 - 18.0	10.0 - 14.0	2.0 - 3.0	---	---	
625 WFM	20.0 - 23.0	55.0 min	8.0 - 10.0	0.50 max	---	E/ERNiCrMo-3
Alloy 625 to 304L/316L Welds	19.0 – 23.0	50.0 min	8.0 min	0.50 max	---	
AL6XN (N08367) BM	20.0 - 22.0	23.5 - 25.5	6.0 - 7.0	0.75 max	---	
to 304L	18.0 - 20.0	8.0 - 12.0	---	---	---	
to 316L	16.0 - 18.0	10.0 - 14.0	2.0 - 3.0	---	---	
625 WFM	20.0 - 23.0	55.0 min	8.0 - 10.0	0.50 max	---	E/ERNiCrMo-3
N08367 to 304L/316L Welds	19.0 – 23.0	25.0 min	4.0 – 10.0	---	---	

BM = Base metal; WFM = Weld filler metal

Notes:

1. Acceptance is based on the combined base metal and WFM spec requirements.
2. Acceptance is based on WFM spec and the expected amount of dilution for molybdenum.

8 Design Changes Incorporated by Reference

24590-WTP-SDDR-PROC-02-0124
24590-WTP-SDDR-PROC-03-0249
24590-WTP-SDDR-PROC-03-0267

24590-WTP-SDDR-PROC-03-0282
24590-WTP-SDDR-PROC-03-0306
24590-WTP-SDDR-PROC-03-0369
24590-WTP-SDDR-PROC-03-0453
24590-WTP-SDDR-PROC-04-00152
24590-WTP-SDDR-PROC-04-00183
24590-WTP-SDDR-PROC-04-00399
24590-WTP-SDDR-PROC-04-00410
24590-WTP-SDDR-PROC-04-00743
24590-WTP-SDDR-PROC-04-00896
24590-WTP-SDDR-PROC-05-00031
24590-WTP-SDDR-PROC-05-00520
24590-WTP-SDDR-PROC-05-00606
24590-WTP-SDDR-PL-05-00004
24590-WTP-SDDR-M-05-00572
24590-WTP-SDDR-M-05-00588
24590-WTP-SDDR-M-05-00628
24590-WTP-SDDR-M-05-00652
24590-WTP-SDDR-M-05-00757
24590-WTP-SDDR-M-05-00758
24590-WTP-SDDR-M-06-00110
24590-WTP-SDDR-M-06-00190
24590-WTP-SDDR-ML-07-00058
24590-WTP-SDDR-ML-07-00191
24590-WTP-SDDR-MS-08-00086
24590-WTP-SDDR-MS-09-00015
24590-WTP-SDDR-PL-05-00043
24590-WTP-SDDR-PL-06-00023
24590-WTP-SDDR-PROC-04-00808
24590-WTP-SDDR-J-10-00012*
24590-WTP-SDDR-J-12-00037*
24590-WTP-SDDR-J-14-00102*
24590-WTP-SDDR-MH-09-00235*
24590-WTP-SDDR-MH-12-00026*
24590-WTP-SDDR-MH-12-00095*
24590-WTP-SDDR-MS-10-00005*
24590-WTP-SDDR-MS-11-00115*
24590-WTP-SDDR-MS-11-00258*
24590-WTP-SDDR-MS-12-00075*
24590-WTP-SDDR-MS-12-00085*
24590-WTP-SDDR-MS-14-00003*
24590-WTP-SDDR-MS-14-00021*
24590-WTP-SDDR-MS-15-00002*
24590-WTP-SDDR-PL-10-00076*
24590-WTP-SDDR-PL-11-00146*
24590-WTP-SDDR-PL-12-00083*
24590-WTP-SDDR-PL-14-00018*
24590-WTP-SDDR-PL-14-00019*

* new

U.S. Department of Energy, Office of River Protection Certification

The following certification statement is provided for the submittal of permit package LAW-028, Rev 0.

I certify under penalty of law that this document and all attachments were prepared under my direction or supervision in accordance with a system designed to assure that qualified personnel properly gather and evaluate the information submitted. Based on my inquiry of the person or persons who manage the system, or those persons directly responsible for gathering the information, the information submitted is, to the best of my knowledge and belief, true, accurate, and complete. I am aware that there are significant penalties for submitting false information, including the possibility of fine and imprisonment for knowing violations.

K. W. Smith, Manager
U.S. Department of Energy,
Office of River Protection

9/24/2015
Date

Bechtel National, Inc. Certification

The following certification statement is provided consistent with Contract No. DE-AC27-01RV14136, Section H.26, Environmental Permits, paragraph (g) for the submittal of the Hanford Facility Resource Conservation and Recovery Act Permit Modification Notification LAW-028, Rev 0.

I certify under penalty of law that this document and all attachments were prepared under my direction or supervision in accordance with a system designed to assure that qualified personnel properly gather and evaluate the information submitted. Based on my inquiry of the person or persons who manage the system, or those persons directly responsible for gathering the information, the information submitted is, to the best of my knowledge and belief, true, accurate, and complete. I am aware that there are significant penalties for submitting false information, including the possibility of fine and imprisonment for knowing violations.

M. G. McCullough
Project Director

9/1/15
Date

W.S. OXENFORD, Acting FOR MGM

Attachment 2
15-ECD-0043
(45 Pages)

Low-Activity Waste Facility Permit Design Package
LAW-026A, Revision 1.

Design Package No. LAW-026a, Rev. 1, for the LAW Facility LVP System Miscellaneous Unit (HEPA Preheaters LVP-HTR-00001A/B & 00003A/B) Table of Contents

CCN 280013

For Incorporation into the Permit

August 19, 2015

Engineering Document Title	Document Number	Revision	Permit Conditions	Included	Remarks
IQRPE Independent Assessment Report	24590-CM-HC4-HXYG-00240-02-00010	00A	III.10.H.5.c.i	Y	Incorporate IQRPE report into Appendix 9.11
Permit Drawings					
General Arrangement Plan	24590-LAW-P1-P01T-00005	5	III.10.H.5.c.ii	N	In Appendix 9.4 (LAW-025)
Drawing Change Notice for 24590-LAW-P1-P01T-00005	24590-LAW-P1N-P01T-00070	N/A	III.10.H.5.c.ii	N	Provided to Ecology in CCN 261726
Drawing Change Notice for 24590-LAW-P1-P01T-00005	24590-LAW-P1N-P01T-00073	N/A	III.10.H.5.c.ii	N	Provided to Ecology in CCN 261729
Process Flow Diagram	24590-LAW-M5-V17T-00010	4	III.10.H.5.c.ii	N	In Appendix 9.1,
Change Notice for 24590-LAW-M5-V17T-	24590-LAW-M5N-V17T-00030	N/A	III.10.H.5.c.ii	N	Provided to Ecology in CCN 261722
Piping & Instrumentation Diagram	24590-LAW-M6-LVP-00001002	0	III.10.H.5.c.ii	N	In Appendix 9.2.
Drawing Change notice for 24590-LAW-M6-LVP-00001002	24590-LAW-M6N-LVP-00130	N/A	III.10.H.5.c.ii	N	Provided to Ecology in CCN 276881
Mechanical Drawings					
Vendor – Mechanical Drawing for the LAW HEPA Filter Preheater	24590-CD-POA-MEE0-00003-03-00004 24590-CD-POA-MEE0-00003-03-00005	00I 00J	III.10.H.5.c.ii III.10.H.5.c.vi	Y	For incorporation into Appendix 9.6
Mechanical Data Sheets					
Mechanical Systems Data Sheet – LVP Off-Gas HEPA Pre-Heaters	24590-LAW-MED-LVP-00006	1	III.10.H.5.c.ii	Y	For incorporation into Appendix 9.6
Engineering Specifications					

Design Package No. LAW-026a, Rev. 1, for the LAW Facility LVP System Miscellaneous Unit (HEPA Preheaters LVP-HTR-00001A/B & 00003A/B) Table of Contents

CCN 280013

For Incorporation into the Permit

August 19, 2015

Engineering Document Title	Document Number	Revision	Permit Conditions	Included	Remarks
Pressure Vessel Design and Fabrication	24590-WTP-3PS-MV00-T0001	5	III.10.H.5.c.ii III.10.H.5.c.iii	N	In Appendix 7.7 (In LAW-025)
Seismic Qualification Criteria for Pressure Vessels	24590-WTP-3PS-MV00-T0002	3		N	In Appendix 7.7
Positive Material Identification (PMI) for Shop Fabrication	24590-WTP-3PS-G000-T0002	9		N	In Appendix 7.7
Secondary Containment Design	24590-WTP-PER-CSA-02-001	10	III.10.H.5.c.ii III.10.H.5.c.iii	N	In Appendix 7.5
Underground Pipe Protection	Not applicable	-	III.10.H.5.c.iv	N/A	There are no underground pipes in the LAW facility El. 3 ft and above
Corrosion Evaluation -HEPA Filter Preheater	24590-LAW-N1D-LVP-00009	2	III.10.H.5.c.iii III.10.H.5.c.v	Y	Incorporate into Appendix 9.9
LAW Vitrification Offgas System Bypass Analysis	24590-LAW-PER-PR-03-001	2	III.10.H.5.c.ix	N	In Appendix 9.18
Installation for Tank Systems and Miscellaneous Treatment Unit Systems	24590-WTP-PER-CON-02-001	6	III.10.H.5.c.x	N	In Appendix 7.12

For Incorporation into the Administrative Record

Engineering Document Title	Document Number	Revision	Permit Condition	Included	Remarks
Structural Support Calculations for Off Spec, Non-Standard or Field Fabricated Miscellaneous Treatment Subsystems	Not Applicable - See Remarks	-	III.10.H.5.c.iii	N	There are no Off Spec, Non-Standard or Field Fabricated Miscellaneous Unit Subsystems in the LAW facility (Preheaters are vendor fabricated
System Description for LOP and LVP: LAW Melter Offgas	24590-LAW-3YD-LOP-00001	3	III.10.H.5.c.vii	N	In Administrative Record (CCN 261065)
System Description Change Notice against the Law Primary Offgas (LOP) and Secondary	24590-LAW-3YN-LOP-00011		III.10.H.5.c.vii	N	Provided to Ecology in CCN 233560

Offgas/Vessel Vent (LVP) Systems	24590-LAW-3YN-LOP-00012		III.10.H.5.c.vii	N	Provided to Ecology in CCN 241650
	24590-LAW-3YN-LOP-00013		III.10.H.5.c.vii	N	Provided to Ecology in CCN 241672
	24590-LAW-3YN-LOP-00015	N/A	III.10.H.5.c.vii	N	Provided to Ecology in CCN 261722
Mass and Energy Balance					
Flowsheet Bases, Assumptions, and Requirements	24590-WTP-RPT-PT-02-005	7	III.10.H.5.c.viii	N	In Administrative Record (CCN 277127)
2010 WTP Material Balance and Steady State Flowsheet Assessment, Deliverable 2.7	24590-WTP-RPT-PET-10-022	0			In Administrative Record (CCN 241137)
Steady-State (AES) Model Run Report for 2010 Material Balance and Process Flowsheet Analysis Assessment Report	24590-WTP-MRR-PET-10-010	0			In Administrative Record (CCN 241137)
Control of Toxic Vapors and Emissions from WTP Tank Systems and Miscellaneous Treatment Unit Systems	24590-WTP-PER-PR-03-002	3	III.10.H.5.c.xi	N	In Administrative Record (CCN 161097)
Prevention of Hydrogen Accumulation	LAW Miscellaneous Treatment Unit Hydrogen Accumulation Document for the DWP Administrative Record (CCN 280210)	1	III.10.H.5.c.xii	N	In Administrative Record (CCN 277127)

Permit Package LAW-026aDescription

LAW-026a, Rev. 1, "Miscellaneous Unit Subsystems for LAW Facility LVP System HEPA Preheaters"

The low-activity waste (LAW) vitrification facility permit package LAW-026a addresses the design of offgas/vessel vent process system (LVP) miscellaneous unit subsystems in the LAW facility at the +48 ft. elevation for the HEPA preheaters.

In the LVP system, melter offgas is combined with vessel vent offgas and heated in the melter offgas HEPA preheaters to raise the offgas above the dew point. The heated offgas then passes through HEPA filters to remove particulates. The offgas is next treated to remove mercury, iodine, and acid gasses by activated carbon adsorption units. The offgas then passes through a recuperative heat exchanger, electric heater, catalytic oxidation unit, and catalytic reduction unit. The catalytic oxidation unit oxidizes volatile organic compounds and carbon monoxide to water and carbon dioxide, and the catalytic reduction unit reduces oxides of nitrogen to nitrogen and water using ammonia. The offgas is directed through the LAW melter offgas caustic scrubber to remove residual acid gasses (primarily sulfur oxides) and to provide final offgas cooling. Effluent from the LAW melter offgas caustic scrubber is recirculated through the LAW caustic collection tank (LVP-TK-00001). The Exhausters maintain negative pressure across the primary and secondary offgas equipment and discharge the treated offgas to the atmosphere through the LAW stack.

Permit Package LAW-026a includes:

- An assessment report signed by an independent qualified registered professional engineer (IQRPE) certifying the HEPA Preheater design
- Vendor mechanical drawing of the LVP HEPA Preheaters
- Mechanical data sheet for the LVP HEPA Preheaters
- Corrosion evaluation for the LVP HEPA Preheaters

The following components of this package are already included in the Dangerous Waste Permit, the Administrative Record, or provided with other permit packages or document submittals listed in the Table of Contents:

- A general arrangement plan for the +48 foot elevation showing LVP system equipment
- Change notices for the general arrangement plan for the +48 foot elevation
- A process flow diagram for the LAW Ammonia & LVP system
- A piping and instrumentation drawings for the LVP system
- Change notices for piping and instrumentation drawings for the LVP system
- Engineering specification for pressure vessel design and fabrication
- Engineering specification for seismic qualification criteria for pressure vessels
- Engineering specification for positive material identification (PMI) for shop fabrication
- A secondary containment design document
- A LAW vitrification offgas system bypass analysis document
- A document describing the installation of tank systems and miscellaneous treatment unit systems
- A system description for the LOP and LVP systems
- Mass and energy balance documents
- A control of toxic vapors and emissions from WTP tank systems and miscellaneous treatment unit systems document
- A prevention of hydrogen accumulation in LAW miscellaneous treatment unit systems memorandum

ISSUED BY
RPP-WTP PDC

RPP-WTP
RECEIVED

APR 16 2014

BY PDC

R11638482

AREVA

~~CCN 266652~~

AFS-14-0134

April 15, 2014

Ms. Tess Klatt
Subcontract Administrator
Bechtel National, Inc.
2435 Stevens Center Place
Richland, Washington 99354

Dear Ms. Klatt:

BECHTEL NATIONAL, INC. CONTRACT NO. 24590-CM-HC4-HXYG-00240 IQRPE STRUCTURAL INTEGRITY ASSESSMENT REPORT FOR LAW LVP HEPA PRE-HEATER HOUSINGS (LVP-HTR-00001A/B AND -00003A/B) (IA-3010206-000)

The integrity assessment of the subject LAW LVP HEPA Pre-heater Housings has been completed per the contract requirements and is enclosed for your use. The assessment found that the design is sufficient to ensure that the LAW LVP HEPA Pre-heater Housings are adequately designed and have sufficient structural strength, compatibility with the waste(s) to be processed/stored/treated, and corrosion protection to ensure that they will not collapse, rupture, or fail.

If you have any questions, please contact Tarlok Hundal at (509) 371-1975, or via email at tarlok.hundal@areva.com.

Sincerely,

Elizabeth W. Smith, C.P.M
Contract Administrator
AREVA Federal Services LLC
Richland Office

Enclosure (1)

LK

cc: D. C. Pfluger, MS5-I w/enclosure (2)

24590-CM-HC4-HXYG-00240-02-00010 Rev 00A

IA-3010206-000

IQRPE STRUCTURAL INTEGRITY ASSESSMENT REPORT FOR LAW LVP HEPA PRE-HEATER HOUSINGS (LVP-HTR-00001A/B AND -00003A/B)

Please note that source, special nuclear and byproduct materials, as defined in the Atomic Energy Act of 1954 (AEA), are regulated at the U.S. Department of Energy (DOE) facilities exclusively by DOE acting pursuant to its AEA authority. DOE asserts; that pursuant to the AEA, it has sole and exclusive responsibility and authority to regulate source, special nuclear, and byproduct materials at DOE-owned nuclear facilities. Information contained herein on radionuclides is provided for process description purposes only.

IQRPE STRUCTURAL INTEGRITY ASSESSMENT REPORT FOR LAW LVP HEPA PRE-HEATER HOUSINGS (LVP-HTR-00001A/B AND -00003A/B)

"I, Tarlok Singh Hundal, have reviewed and certified a portion of the design of a new tank system or component located at the Hanford Waste Treatment Plant, owned/operated by Department of Energy, Office of River Protection, Richland, Washington. My duties were independent review of the current design for the LAW LVP HEPA Pre-heater Housings, as required by the Washington Administrative Code, *Dangerous Waste Regulations*, Section WAC-173-303-640(3) (a) through (g) applicable components."

"I certify under penalty of law that I have personally examined and am familiar with the information submitted in this document and all attachments and that, based on my inquiry of those individuals immediately responsible for obtaining the information, I believe that the information is true, accurate, and complete. I am aware that there are significant penalties for submitting false information, including the possibility of fine and imprisonment."

The documentation reviewed indicates that the design fully satisfies the requirements of the WAC.

The attached review is eleven (11) pages numbered one (1) through eleven (11).

Signature

4/14/14
Date

Scope	Scope of this Integrity Assessment	The scope of this integrity assessment includes four LAW LVP HEPA Pre-heater Housings (LVP-HTR-00001A/B & -00003A/B), also known as Miscellaneous Units (MUs) or Plant Items associated with the LVP system as shown on P&ID Drawing 24590-LAW-M6-LVP-00001002. The HEPA Pre-heaters are used to increase the nominal temperature of the Melter Offgas to avoid its condensation in the HEPA filters. These HEPA Pre-heater Housings are in-line pipe equipment located in Room L-0304H at Elevation 48'-0" of the LAW facility as shown on General Arrangement Plan Drawing 24590-LAW-P1-P01T-00005.
Summary of Assessment		For each item of "Information Assessed" (i.e., Criteria) on the following pages, the items listed under "Source of Information" were reviewed and found to furnish adequate design requirements and controls to ensure that the design fully satisfies the requirements of Washington Administrative Code (WAC), Chapter 173-303 WAC, *Dangerous Waste Regulations,* Section WAC-173-303-640 (3) (a) through (g) applicable elements of the *Tank Systems.*

References	Material Requisition, Specifications, and Plant Drawings	Material Requisition (MR): 24590-QL-MRA-MEE0-00003, Rev. 1, LVP HEPA Pre-heater, including TCN #s T0001 thru T0006, and SDDR #s MS-12-00035, MS-13-00022 and MS-14-00010.. Specifications: The following Specifications with their respective revision and Specification Change Notices (SCNs) are listed in the above listed MR: 24590-WTP-3PS-FB01-T0001, Engineering Specification for Structural Design Loads for Seismic Category III & IV Equipment and Tanks; 24590-WTP-3PS-G000-T0001, Engineering Specification for Supplier Quality Assurance Program Requirements;* 24590-WTP-3PS-G000-T0002, Engineering Specification for Positive Material Identification (PMI) for Shop Fabrication; 24590-WTP-3PS-G000-T0003, Engineering Specification for Packaging, Handling, and Storage Requirements; 24590-WTP-3PS-G000-T0014, Engineering Specification for Supplier Design Analysis; 24590-WTP-3PS-MVB2-T0001, Engineering Specification for Welding of Pressure Vessels, Heat Exchangers, and Boilers; 24590-WTP-3PS-P000-T0001, Engineering Specification for Piping Material Classes General Description and Summary; 24590-WTP-3PS-G000-T0019, Engineering Specification for Acquisition of Commercial Items and Services for Use in Safety Applications at WTP.* *Specification not listed in the MR, however, is listed as a daughter document elsewhere in other related document. Plant Drawings: 24590-LAW-P1-P01T-00005, Rev. 5, LAW Vitrification Building General Arrangement Plan at El. 48'-0"; 24590-LAW-P1-P23T-00052, Rev. 3, LAW Vitrification Building Equipment Location Plan El. 48'-0"/Area 5; 24590-LAW-M6-LVP-00001002, Rev. 0, (+ DCN #s 00083, 00093, and 00095) P&ID- LAW Secondary Offgas/Vessel Vent Process System HEPA Preheaters; 24590-LAW-M5-V17T-00010, Rev. 4 (+DCN # 000029 & 00030), Process Flow Diagram LAW Secondary Offgas Vessel Vent Process System; 24590-LAW-DD-S13T-00308, Rev. 3, LAW Vitrification Building Main Building LVP-HEPA Equipment Anchorage at Elevation (+) 48'-0"; 24590-LAW-P3-LVP-PW00107001, Rev. 0, LAW Vitrification Building Isometric (LVP-PW-00107-N11F-24); 24590-LAW-P3-LVP-PW00108001, Rev. 0, LAW Vitrification Building Isometric (LVP-PW-00108-N11F-24); 24590-LAW-P3-LVP-PW00109001, Rev. 0, LAW Vitrification Building Isometric (LVP-PW-00109-N11F-24); 24590-LAW-P3-LVP-PW00110001, Rev. 0, LAW Vitrification Building Isometric (LVP-PW-00110-N11F-24); 24590-LAW-LVP-H30174 001, Rev. 0, Eng Pipe Support Drawing Detail Sht 1 of 3; 24590-LAW-LVP-H30174 002, Rev. 0, Eng Pipe Support Drawing Detail Sht 2 of 3; 24590-LAW-LVP-H30174 003, Rev. 0, Eng Pipe Support Drawing Detail Sht 3 of 3.

References (cont'd)	Vendor Drawings, Mechanical Data Sheet, and System Description	Vendor Fabrication Drawings (*Bechtel Status Code 1 or 4 Drawings): 24590-CD-POA-MEE0-00003-03-00002, Rev. 00H, Weld/NDE Map-Flanged Heater, TMIS-72-039P-E2XX, 155-073232-082 (LVP-HTR-00001B and LVP-HTR-00003B); 24590-CD-POA-MEE0-00003-03-00003, Rev. 00H, Weld Map Flanged Heater, TMIS-72-075P-E2XX, 155-073232-083, (LVP-HTR-00001A and LVP-HTR-00003A); 24590-CD-POA-MEE0-00003-03-00004, Rev. 00H, Immersion Heater Flanged, TMIS-72-039P-E2XX, 480V, 39KW, 3-3PH, 5.0 WPSI, 24"-150# Const., ALVAC AL6XN*ASME* (LVP-HTR-00001B and LVP-HTR-00003B); 24590-CD-POA-MEE0-00003-03-00005, Rev. 00I, Immersion Heater Flanged, TMIS-72-075P-E2XX, 480V, 75KW, 1-3PH, 9.6 WPSI, 24"-150# Const., ALVAC AL6XN*ASME* (LVP-HTR-00001A and LVP-HTR-00003A); 24590-CD-POA-MEE0-00003-03-00006, Rev. 00A, Flange Drilling, 24"-150# , ALLVAC AL6XN SB-462 (UNS 08367) (LVP-HTR-00001B and LVP-HTR-00003B). * Bechtel Status Code 1 Drawing is an "as fabricated vendor drawing" approved/accepted by Bechtel. Bechtel Status Code 4 Drawing is an "as fabricated vendor drawing" approved without review by Bechtel. Vendor Mechanical Systems Data Sheet (a.k.a. Mechanical Data Sheet-MDS): 24590-CD-POA-MEE0-00003-15-00007, Rev. 00C, LVP Offgas HEPA Pre-heaters (LVP-HTR-00001A/B and -00003A/B). System Description: 24590-LAW-3YD-LOP-00001, Rev. 3, System Description for the LAW Primary Offgas (LOP) and Secondary Offgas/Vessel Vent (LVP) Systems (including SDCN #s 24590-LAW-3YN-LOP-00011, -00012, -00013, and -00015).

Information Assessed		Source of Information	Assessment
Design	Plant Item design standards are appropriate and adequate for the vessel's intended use.	Material Requisition, Specifications, Drawings, and Mechanical Data Sheet listed above under References; ASME Boiler and Pressure Vessel (B&PV) Code, Section VIII, Div. 1, Rules for Construction of Pressure Vessels, American Society of Mechanical Engineers; ASME Boiler and Pressure Vessel (B&PV) Code, Section VIII, Div. 2, Rules for Construction of Pressure Vessels-Alternative Rules, American Society of Mechanical Engineers; ASME Boiler and Pressure Vessel (B&PV) Code, Section IX, Welding and Brazing Qualifications, American Society of Mechanical Engineers; ASME Boiler and Pressure Vessel (B&PV) Code, Section III, Subsection NCA, American Society of Mechanical Engineers; ASME Boiler and Pressure Vessel (B&PV) Code, Section V, Nondestructive Examination, American Society of Mechanical Engineers; ASME B 16.5, Pipe Flanges and Pipe Fittings Standard, American Society of Mechanical Engineers; NFPA 70, National Electrical Code, NFPA-70-1999).	The LAW HEPA Pre-heater Housings (LVP-HTR-00001A/B and -00003A/B) are considered as vessels. They are also interchangeably termed herein as MUs or Plant Items. The Technical Requirements listed in the Material Requisition document for the HEPA Pre-heater Housings and Mechanical Data Sheet require that the design and fabrication be per listed NFPA 70 and ASME codes and standards in the Source of Information column. Supplemental detailed requirements for the HEPA Pre-heater Housings fabrication are specified in various engineering specifications listed in the References section herein. These requirements include items such as, positive material identification, fabrication tolerances, welding procedures, welder qualifications, and testing records, NDE inspections and records, packaging, handling, and storage requirements. The Mechanical Data Sheet (MDS) for these MUs lists their Safety Class as Safety Significant (SS), Quality Level (Q), and Seismic Category (SC-III). The drawings show that each HEPA Pre-heater unit is housed in a 24" pipe, class N11F (AL-6XN 6% Mo, B462-UNS N08367) material which is supported as an in-line equipment. The Specification for Piping Materials Classes document lists properties of the class N11F type pipe. The design requirements specified in the codes and specifications are appropriate and adequate for the intended use of these MUs.

	Information Assessed	Source of Information	Assessment
Design (cont'd)	If a non-standard Plant Item is to be used, the design calculations demonstrate sound engineering principles of construction.	Material Requisitions and Engineering Specifications listed above under References; ASME Boiler and Pressure Vessel (B&PV) Code, Section VIII, Div. 1, Rules for Construction of Pressure Vessels, American Society of Mechanical Engineers; ASME Boiler and Pressure Vessel (B&PV) Code, Section VIII, Div. 2, Rules for Construction of Pressure Vessels-Alternative Rules, American Society of Mechanical Engineers; ASME Boiler and Pressure Vessel (B&PV) Code, Section IX, Welding and Brazing Qualifications, American Society of Mechanical Engineers; ASME B 16.5, Pipe Flanges and Pipe Fittings Standard, American Society of Mechanical Engineers; 24590-CD-POA-MEE0-00003-05-00002, Rev. 00E, Seismic Analysis of Flanged Electric Heater (LVP-HTR-00001A/B & -00003A/3B Housing Units Design Calculation); 24590-CD-POA-MEE0-00003-05-00005, Rev. 00D, Flanged Heater Weight and Center of Gravity Calculations (LVP-HTR-00001A/B & -00003A/3B Housing Units Design Calculation); 24590-CD-POA-MEE0-00003-05-00006, Rev. 00C, Flange Analysis-ASME Section VIII (LVP-HTR-00001A/B & -00003A/3B Housing Units Design Calculation).	The MUs in the LAW LVP System noted above are non-standard offgas treatment assemblies that are shop fabricated. The Technical Requirements in Material Requisition document require that the ASME code assemblies be delivered after design, fabrication, inspection, and testing. Review of the listed Design Calculations shows that sound engineering principles were used for the design and construction of the HEPA Pre-heater Housings.

	Information Assessed	Source of Information	Assessment
Design (cont'd)	Plant Item has adequate strength, after consideration of the corrosion allowance, to withstand the operating pressure, operating temperature, and seismic loads.	Specifications, Mechanical Data Sheet, and Material Requisition listed above under References; ASME Boiler and Pressure Vessel (B&PV) Code, Section VIII, Div. 1, Rules for Construction of Pressure Vessels, American Society of Mechanical Engineers; ASME Boiler and Pressure Vessel (B&PV) Code, Section IX, Welding and Brazing Qualifications, American Society of Mechanical Engineers; ASME B 16.5, Pipe Flanges and Pipe Fittings Standard, American Society of Mechanical Engineers; ASME B31.3, Process Piping, ASME Code for Process Piping, American Society of Mechanical Engineers; NFPA 70, National Electrical Code, NFPA-70-1999). UBC 1997, Uniform Building Code, International Conference of Building Officials; 24590-LAW-N1D-LVP-00009, Rev. 1, Corrosion Evaluation for LAW Melter Offgas HEPA Pre-heaters (LVP-HTR-00001A/B and -00003A/B); 24590-LAW-P6C-LOP-10016, Rev. E, Pipe Stress Analysis for LOP System (Design Calculation); 24590-LAW-PHC-LVP-40001, Rev. 0, RPP-WTP Engineered Support Calculation for LAW-LVP-H30174, LAW-LVP-H30175, LAW-LVP-H30176, & LAW-LVP-H30177, including ECCN # 00016 (Design Calculation); 24590-CD-POA-MEE0-00003-05-00002, Rev. 00E, Seismic Analysis of Flanged Electric Heater (LVP-HTR-00001A/B & -00003A/3B Housing Units Design Calculation).	The Technical Requirement listed in the MR and in MDS for HEPA Pre-heater Housings require that these MUs including all related components and appurtenances be designed and fabricated in accordance with the applicable sections of ASME and NFPA 70 codes and standards listed in the Source of Information column. These codes and standards require specific consideration of operating pressures, temperatures, corrosion allowance, and seismic loads in the design process. The Mechanical Data Sheet identifies the operating pressure and temperature ranges and seismic categories for the subject MUs. A corrosion allowance of 0.0425" is recommended for these MUs as identified in the Corrosion Evaluation document. The UBC 1997 Code specifies the seismic loads for the SC-III equipment. The listed Design Calculation reviewed shows that the applicable loading parameters including the applicable design change notices such as DCNs, TCNs, and SDDRs were appropriately considered in the design process and the MU housings will have adequate strength to sustain them during their design life.

Information Assessed		Source of Information	Assessment
Foundation	Plant Item foundation will maintain the load of a full vessel.	Material Requisition, Mechanical Data Sheet, and Drawings listed above under References; ASME Boiler and Pressure Vessel (B&PV) Code, Section VIII, Div. 1, Rules for Construction of Pressure Vessels, American Society of Mechanical Engineers; ASME Boiler and Pressure Vessel (B&PV) Code, Section VIII, Div. 2, Rules for Construction of Pressure Vessels-Alternative Rules, American Society of Mechanical Engineers; ASME Boiler and Pressure Vessel (B&PV) Code, Section IX, Welding and Brazing Qualifications, American Society of Mechanical Engineers; ASME B31.3, Process Piping, ASME Code for Process Piping, American Society of Mechanical Engineers; ASME B 16.5, Pipe Flanges and Pipe Fittings Standard, American Society of Mechanical Engineers; 24590-WTP-DB-ENG-01-001, Rev. 1Q, Basis of Design; 24590-CD-POA-MEE0-00003-05-00002, Rev. 00E, Seismic Analysis of Flanged Electric Heater (LVP-HTR-00001A/B & -00003A/3B Housing Units Design Calculation). 24590-LAW-DDC-S13T-00061, Rev. 0, Anchorage of LVP Pipe Support Frame near LAW + 48 Pre-Heaters (Design Calculation).	The Technical Requirements listed in MR, MDS, and drawings documents show that the HEPA Pre-heater Housings are inline pipe equipment designed to be supported per applicable ASME codes as listed in the Source of Information column. The Basis of Design document requires that the supports and foundations shall be designed adequately to sustain all applicable loads including the full weight of the Plant Item. The review of Design Calculation report shows that these units are supported as in-line equipment which essentially make them part of that pipe line to handle the applicable full loads of the units. It should be noted that the evaluation of the HEPA Pre-heater Housings foundation is not in the scope of this report. However, it is covered in a separate integrity assessment report.

	Information Assessed	Source of Information	Assessment
Foundation (cont'd)	If in an area subject to flooding, the Plant Item is anchored.	Drawings and Mechanical Data Sheet listed above under References; 24590-LAW-DDC-S13T-00061, Rev. 0, Anchorage of LVP Pipe Support Frame near LAW + 48 Pre-Heaters (Design Calculation).	As shown on the referenced drawings, the MUs included in this assessment are located on the 48'-0" floor elevation of the LAW facility. The MDS does not list any flooding condition for submergence of these units, therefore, they need not be evaluated for any buoyant forces. However, in order to sustain any other applicable loads such as seismic loads, these units are mounted with flanged connection as shown on the drawings.
	Plant Item system will withstand the effects of frost heave.	Drawings listed above under References; 24590-WTP-DC-ST-01-001, Rev. 13, Structural Design Criteria.	The Structural Design Criteria document requires that all structural foundations extend into the surrounding soil below the 30 inch frost line in order to preclude frost heave. As shown on the referenced general arrangement drawings, the MUs considered in this assessment are installed in the LAW facility at Floor Elev. 48'-0" which is not subject to frost heave. Therefore, the frost heave effect does not apply to these units.

	Information Assessed	Source of Information	Assessment
Waste Characteristics	Characteristics of the waste to be stored or treated have been identified (ignitable, reactive, toxic, specific gravity, vapor pressure, flash point, storage temperature)	System Description and Mechanical Data Sheet listed above under References; 24590-WTP-PER-PR-03-002, Rev. 3, Control of Toxic Vapors and Emissions from WTP Tank and Miscellaneous Unit Systems; 24590-WTP-PER-PR-03-001, Rev. 1, Prevention of Hydrogen Accumulation in WTP Tank Systems and Miscellaneous Treatment Unit Systems; 24590-WTP-M4C-V11T-00004, Rev. C, Calculation of Hydrogen Generation Rates and Times to Lower Flammability Limit for WTP.	The Mechanical Data Sheet presents the operating temperatures and pressures for MUs within the scope of this assessment. The System Description document identifies the offgas being handled by the MUs as hazardous, but not ignitable or flammable. The main safety function of the LVP system MUs is to prevent the escape of toxic and hazardous gas vapors to the environment, from the LAW Secondary Offgas System. MU component's design is required to provide an intact housing pressure boundary during normal and abnormal operations and during and after design level seismic events. Waste characteristics that are hazardous, such as ignitability, reactivity, and toxicity are appropriately addressed in the Control of Toxic Vapors and Emissions document and Prevention of Hydrogen Accumulation document. The System Description and Control of Toxic Vapors and Emissions documents describe that the LAW HEPA Pre-heaters are used to increase the nominal temperature of the Melter Offgas to avoid its condensation in the HEPA filters. The Prevention of Hydrogen Accumulation document indicates that MUs in the LAW facility are not expected to generate hydrogen gas, therefore, they do not pose any hydrogen accumulation hazard. It is also substantiated in the Calculation for Hydrogen Generation Rates document that hydrogen generation is a liquid-phase phenomenon and since these MUs are a dry offgas system, hydrogen generation should not be an issue.
	Plant Item is designed to store or treat the wastes with the characteristics defined above and any treatment reagents.	Mechanical Data Sheet and System Description listed above under References.	The Mechanical Data Sheet adequately demonstrates the incorporation of identified waste characteristics into the MU design. Normal and abnormal operating conditions are discussed in the System Description. No reagents are added to the combined offgas stream at the Preheater unit locations.

	Information Assessed	Source of Information	Assessment
Compatibility	The waste types are compatible with each other.	System Description listed above under References.	The MUs herein assessed draw gases from the LAW melters and the process vessels are used to increase the nominal temperature of the Melter Offgas to avoid its condensation in the HEPA filters downstream. The System Description document does not identify any compatibility issues relating to the offgas constituents listed above. Therefore, there are no concerns for compatibility of waste types.
Compatibility	Plant Item material and protective coatings ensure the vessel structure is adequately protected from the corrosive effects of the waste stream and external environments (expected to not leak or fail for the design life of the system).	Mechanical Data Sheet, Drawings, and System Description listed above under References; 24590-LAW-N1D-LVP-00009, Rev. 1, Corrosion Evaluation for LAW Melter Offgas HEPA Pre-heaters (LVP-HTR-00001A/B and -00003A/B);	The 6% Mo alloy material (B462 UNS N08367) selected in the Corrosion Evaluation document and as listed in the Mechanical Data Sheet (MDS) serves it purpose being corrosion resistant for the anticipated environment. The material selection and their thicknesses with built in margin of safety and corrosion allowance of 0.0425" are adequate for these MUs. The MDS and drawings also show that the material used for sealing flange gaskets as stainless steel spiral wound (HAST-C-FG) is appropriate for the intended service. As these units operate in generally dry and actively ventilated conditions, external corrosion is not considered to be an issue. Therefore, the materials selected are adequate to provide the required 40-year service life as specified in System Description document.
Corrosion Allowance	Corrosion allowance is adequate for the intended service life of the Plant Item.	Drawings listed above under References; 24590-LAW-N1D-LVP-00009, Rev. 1, Corrosion Evaluation for LAW Melter Offgas HEPA Pre-heaters (LVP-HTR-00001A/B and -00003A/B);	The Corrosion Evaluation document specifies corrosion allowance of 0.0425" for the HEPA Pre-heater Housing units. The review of the Design Calculations and drawings show that the units are properly designed accounting for the specified corrosion allowance and that they will adequately sustain the applicable loads during their intended service life of 40 years.

	Information Assessed	Source of Information	Assessment
Pressure Controls	Pressure controls (vents and relief valves) are adequately designed to ensure pressure relief if normal operating pressures in the Plant Item are exceeded.	System Description and Specifications listed above under References.	The System Description document provides a discussion of Normal and Off-Normal operations of the LAW Secondary Offgas LVP System. During normal operations the system is expected to run with little intervention. Since the Preheater units are in-line equipment, the designated pipe line housing them is designed for 15/FV psig, however, the pipe line classified as N11F per Engineering Specification for Piping Material Classes document, has capacity strength to sustain maximum anticipated pressure of up to 230 psig in the system, therefore, it has sufficient built in safety factor to accommodate any pressure increases in the system.

15-ECD-0043

Drawings:

155-073232-082R10 SHT 1 OF 3
155-073232-082R10 SHT 2 OF 3
155-073232-082R10 SHT 3 OF 3

155-073232-083R10 SHT 1 OF 3
155-073232-083R10 SHT 2 OF 3
155-073232-083R10 SHT 3 OF 3

have been scanned as separate attachment(s) due to size and printing capabilities.

ISSUED BY
RPP-WTP PDC

BECHTEL	**Mechanical Systems Data Sheet** LVP OFF-GAS HEPA PRE-HEATERS	Component No. 24590-LAW-ME-LVP-HTR-00001A 24590-LAW-ME-LVP-HTR-00001B 24590-LAW-ME-LVP-HTR-00003A 24590-LAW-ME-LVP-HTR-00003B 24590-LAW-JC-LVP-PNL-00014 24590-LAW-JC-LVP-PNL-00015 Data Sheet No. 24590-LAW-MED-LVP-00006 — Rev. 1

Project:	*RPP-WTP*		P&ID's:	*24590-LAW-M6-LVP-00001002*			
Project No:	*24590*		EQ Datasheet	*24590-LAW-M0Q-LVP-00002*			
Environmental Qualification	*YES (By BUYER)* *24590-LAW-U0D-W16T-00001*			Calculation No. 24590-LAW-M4C-LOP-00001 24590-LAW-MEC-LVP-00003 24590-LAW-MEC-LVP-00005 24590-LAW-M6C-20-00006			
Project Site:	*Hanford*			QUALITY LEVEL	Q	SAFETY CLASS	SS
BLDG	20, LAW	SYSTEM	LVP	SEISMIC CATEGORY	SC-III		
Description:	LVP HEPA Off-gas Pre-Heaters						

1

PROCESS DESIGN

Process Input	Unit	One Melter (Minimum)	Two Melter (Normal)	Two Melter (Maximum)	Two Melter (Bounding)
Dry Air	SCFM	1024	2553	2607	3178
Steam	SCFM	85	321	343	785
Others	SCFM	21	15.4	28	45
Design Pressure (Note 1)	PSIG	15/FV	15/FV	15/FV	15/FV
Design Temperature	°F	250	250	250	250
Temperature In	°F	104	124	126	146
Temperature Out	°F	140	160	162	182
ΔT	°F	36	36	36	36

COMPONENT DESIGN

Input	Unit	One Melter (Minimum)	Two Melter (Normal)	Two Melter (Maximum)	Two Melter (Bounding)
Maximum Operating Pressure	psig	15	15	15	15
Maximum Operating Temperature	°F	182	182	182	182
Maximum Temperature Differential	°F	36	36	36	36

	Mechanical Systems Data Sheet LVP OFF-GAS HEPA PRE-HEATERS	Component No. 24590-LAW-ME-LVP-HTR-00001A 24590-LAW-ME-LVP-HTR-00001B 24590-LAW-ME-LVP-HTR-00003A 24590-LAW-ME-LVP-HTR-00003B 24590-LAW-JC-LVP-PNL-00014 24590-LAW-JC-LVP-PNL-00015	
		Data Sheet No. 24590-LAW-MED-LVP-00006	Rev. 1

Design Notes

1. LVP HEPA Pre-Heaters have a design pressure value of FV and 15 psig to correspond with the pipe design temperature of 250°F. Hydrostatic test pressure shall be 1.5 times 15 psig.
2. *: SELLER to confirm/complete values.
3. Heating elements to be sized to keep relative humidity of process stream below 70% (below dew point) and raise offgas temperature by 20°C (36°F) from inlet to outlet. 1
4. Contents of this document are Dangerous Waste Permit affecting.
5. Equipment cyclic data listed below. Fatigue Assessment to be done in accordance with para. AD-160 of ASME Section VIII Division 2, Rules for Construction of Pressure Vessels - Alternative Rules, (2004 edition, w/ 2005-2006 Addenda).
6. Please note that source, special nuclear, and byproduct materials, as defined in the Atomic Energy Act of 1954 (AEA), are regulated at the US Department of Energy (DOE) facilities exclusively by DOE acting pursuant to its AEA authority. DOE asserts that, pursuant to the AEA, it has sole and exclusive responsibility and authority to regulate source, special nuclear, and byproduct materials at DOE-owned nuclear facilities. Information contained herein on radio nuclides is provided for process description only.
7. Contents of this document are Air Permit affecting. 1

EQUIPMENT CYCLIC DATA

Load Type		Min	Max	Number of Cycles	Comment
Design Pressure	psig	*FV*	*15*	*480*	
Operating Pressure	psig	*-3*	*-2*	*480*	
Operating Temperature	°F	*59*	*235*	*480*	***24590-LAW-M4C-LOP-00001 states a max temperature of 182°F. For conservatism 235°F is chosen to evaluate fatigue, per ASME Section VIII, Division 1, AD-160, reflecting short term deviations from the maximum conditions.*** 1
Contents Specific Gravity		-	-	*480*	***AIR @ 68.0% Relative Humidity Inlet***
Contents Level	inch	*N/A*	*N/A*		
Localized Features					
Nozzles		*N/A*			
Supports		*N/A*			

	Mechanical Systems Data Sheet LVP OFF-GAS HEPA PRE-HEATERS	Component No. 24590-LAW-ME-LVP-HTR-00001A 24590-LAW-ME-LVP-HTR-00001B 24590-LAW-ME-LVP-HTR-00003A 24590-LAW-ME-LVP-HTR-00003B 24590-LAW-JC-LVP-PNL-00014 24590-LAW-JC-LVP-PNL-00015	
		Data Sheet No. 24590-LAW-MED-LVP-00006	Rev. 1

Heater Specification

Input	Unit	Description
Type/Brand	-	Chromalox Flanged Immersion Heater (1)
Model Number	-	TMIS-72-039P-E2XX TMIS-72-075P-E2XX
Weight	Lbs.	1118
Active Safety Heater Power	kW	39=(13 x 3)
Maximum Power @ Design Temperature	kW	39
Minimum Power @ Minimum Temperature	kW	13
Heating Element Material	-	Incoloy 800
Internal Structural Components Spacer Rods, Grills (1)	-	SA-479/(316/316L)
Heating Element Density	W/in^2	5
Passive Mechanical Boundary Safety Heater Power	kW	75 (1)
Maximum Power @ Design Temperature	kW	75
Minimum Power @ Minimum Temperature	kW	0
Design Specification & Qualification	-	ASME Section VIII, Division 1

	Mechanical Systems Data Sheet LVP OFF-GAS HEPA PRE-HEATERS	Component No. 24590-LAW-ME-LVP-HTR-00001A 24590-LAW-ME-LVP-HTR-00001B 24590-LAW-ME-LVP-HTR-00003A 24590-LAW-ME-LVP-HTR-00003B 24590-LAW-JC-LVP-PNL-00014 24590-LAW-JC-LVP-PNL-00015	
		Data Sheet No. 24590-LAW-MED-LVP-00006	Rev. 1

Mechanical Connection		
Input	**Unit**	**Description**
Lifting Lugs	-	Supplied on flange 1
Flange Size, Type/Rating	in	24, ASME B16.5 RF CL 150
Flange Material	-	Allvac AL6XN(B462/UNS N08367) 1
Pressure Boundary Enclosure Materials (Heating Element Tubes)		Incoloy 800
Body Flange Gasket	-	Spiral Wound (HAST C-FG, 1/8" SS, CL 150, B16.20, B16.5)
Mounting	-	Vertical (Flanged to plant piping)
Electrical (Note 2)		
Input	**Unit**	**Description**
UL Listing	-	Required NRTL certification
Number of Circuits (Active Safety Heater)(Note 3)	-	3
Number of Circuits (Passive Mechanical Boundary Heater)	-	1
Terminal Seals	-	Hermetic Seals (1000^0F)
Terminal Enclosure	-	NEMA 2, Explosion Resistant
Terminal Enclosure Standoff	in	6
Controls & Instrumentation		
Control Panels (Remote)	-	NEMA 4, UL Listed

Buyer's Connection	-	**Profibus Control Signal (Note 4)**
Over-temperature Protection Thermocouple	-	**Yes, Type K, (Heater mounted) 1 per circuit (Note 5)**

Heater Specification Notes

1. *: SELLER to confirm/complete values.
2. BUYER supplies 480 Volts, 3 phase, alternating current to heaters. For passive mechanical boundary heater, manufacturer's standard offering of electrical connection shall be provided.
3. Active electrical safety heaters shall have three independently wired 13 kW elements.
4. Applies to Passive Mechanical Boundary Heaters (LVP-HTR-00001A/-00003A)
5. LVP-HTR-00001A/-00003A have one over temperature thermocouple working with heater panels (LVP-PNL-00014/-00015). LVP-HTR-00001B/-00003B have three over temperature thermocouples, one for each heater. The B train heater thermocouples are not in use for over temperature protection and are used for indication only by the ICN.

Reference List:

24590-CD-POA-MEE0-00003-03-00004	REV. 00H
24590-CD-POA-MEE0-00003-03-00005	REV. 00I
24590-LAW-M4C-LOP-00001	REV. 3
24590-LAW-MEC-LVP-00003	REV. 1
24590-LAW-MEC-LVP-00005	REV. 0
24590-LAW-M6C-20-00006	REV. 0
24590-LAW-U0D-W16T-00001	REV. 2
24590-LAW-M6-LVP-00001002	REV. 0
24590-LAW-M0Q-LVP-00002	REV. ~~0~~ 1

1

TW 3/16/15

	Mechanical Systems Data Sheet LVP OFF-GAS HEPA PRE-HEATERS	Component No. 24590-LAW-ME-LVP-HTR-00001A 24590-LAW-ME-LVP-HTR-00001B 24590-LAW-ME-LVP-HTR-00003A 24590-LAW-ME-LVP-HTR-00003B 24590-LAW-JC-LVP-PNL-00014 24590-LAW-JC-LVP-PNL-00015	
		Data Sheet No. 24590-LAW-MED-LVP-00006	Rev. 1

Figure 1:

(Conceptual Design)

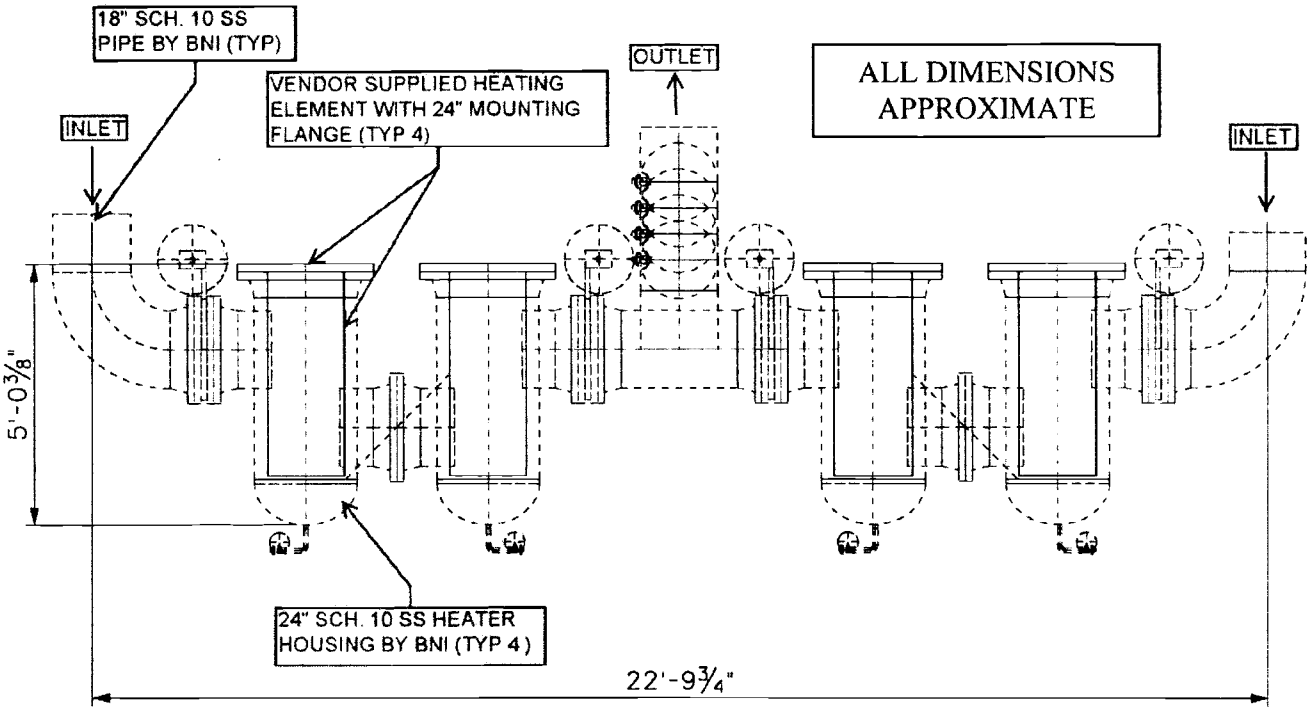

LVP HEPA PRE-HEATER Piping Arrangement to be provided by BUYER. Piping configuration conceptual design (above) provided for clarity. SELLER scope is heating units and standard offering remote mounted control panels only.

Heater length in pipe maximum 48". Heater length outside pipe maximum 12". Total heater length maximum 60"

Units consist of one 75 kW unit and one 39 kW unit (3, 13kW elements). Piping, Orientation, and installation by BUYER.

Ref. 24590-CD-POA-MEE0-00003-03-00004, 24590-CD-POA-MEE0-00003-03-00005 for detail design of preheater units including domed lids outside flanged connection.

1

(BNI Internal Notes):

Design Codes for LVP HEPA Preheaters

- Preheater element assemblies ASME Section VIII Division 1(SELLER)
  - Preheater element assemblies NDE will be by (SELLER)
    - Visual Examination (VT)
    - Dye Penetrant Examination (PT)
    - Hydrostatic Examination in accordance with ASME Section VIII Division 1

Quality Notes

(Note: SELLER's Quality Assurance plan shall be commercially acceptable and able to fulfill the technical requirements of this material requisition upon successful audit/survey by BNI to the requirements of CM Datasheet of Quality Assurance Program.
BUYER shall have right of access to SELLER's facilities (technical, commercial, and quality personnel) /subcontractors(technical, commercial, and quality personnel) to conduct audits, surveys, and surveillances during the course of this procurement to make sure that all quality and technical requirements are being met. It is not the intent of the BUYER to evaluate the SELLER's compliance to ASME NQA-1 (2000) requirements. The BUYER will satisfy all ASME NQA-1 (2000), Commercial Grade Dedication, Equipment Environmental, and Seismic Qualification requirements of this procurement.

Equipment Qualification

The equipment environmental and seismic qualification will be performed by the BUYER. SELLER equipment designs shall not be considered complete until determined sufficient by BUYER's equipment qualification. Fabrication of SELLER designs or shipment of standard off-the shelf items shall not commence before completion of equipment qualification, except to provide identical test unit(s) if test is required. (Note: 24590-QL-MRA-J000-00001: Equipment Qualification Services)

Commercial Grade Dedication

(Note, BNI Internal Reference: BUYER to dedicate LVP HEPA Pre-Heaters to Quality Level Q, Seismic Category III through special tests and inspections under BUYER's Commercial Grade Dedication program which will verify the nuclear safety functions of the LVP HEPA Pre-Heaters. SELLER does not have any Commercial Grade Dedication or ASME NQA-1 (2000) scope for this material requisition.) [Internal Note: BNI to CGD under 24590-WTP-3PS-G000-T0019: Engineering Specification for Acquisition of Commercial Items and Services for Use in Safety Applications at WTP]

	Mechanical Systems Data Sheet LVP OFF-GAS HEPA PRE-HEATERS	Component No. 24590-LAW-ME-LVP-HTR-00001A 24590-LAW-ME-LVP-HTR-00001B 24590-LAW-ME-LVP-HTR-00003A 24590-LAW-ME-LVP-HTR-00003B 24590-LAW-JC-LVP-PNL-00014 24590-LAW-JC-LVP-PNL-00015	
		Data Sheet No. 24590-LAW-MED-LVP-00006	Rev. 1

Incorporates 24590-QL-MRA-MEE0-00003-T0001
24590-WTP-SDDR-MS-12-00035
24590-WTP-SDDR-MS-13-00035

APPROVALS

1 3/16/2015	Issued for Purchase (rework) Ref. NCR-14-0180 Added spacer bar material specification Incorporates Vendor Data 24590-CD-POA-MEE0-00003-15-00007, REV. 00C	J. Wood	P. Meeuwsen	3/3/15 C. Caimi	N. Kippes	P. RAJAGOPALAN ~~S.~~ ~~Kretzschmar~~
0 (11/17/11)	PURCHASE, Supersedes 24590-LAW-MED-LVP-00005, REV 5	J. Wood	G. Goolsby	D. Krahn	M. R. O'Neill	D. Wilsey
Revision	***Issued for***	***Originator***	***Checker***	***NSE (formerly E&NS)***	***Reviewer***	***Approver***

CORROSION EVALUATION

LVP-HTR-00001A/B & LVP-HTR-00003A/B
Melters Offgas HEPA Preheater

Contents of this document are Dangerous Waste Permit affecting

Results

Materials Considered:

Material (UNS No.)	Acceptable Material
Carbon Steel	
Type 304L (S30403)	
Type 316L (S31603)	X (housing only)
AL-6XN® 6% Mo (N08367)	X (housing only)
Incoloy® 800 (N08800)	X (heating element sheath)
Hastelloy® C-22® (N06022)	X
Ti-2 (R50400)	

Recommended Material Types: **Housing/Flange – Type 316 stainless steel (max 0.030% C; dual certified)**

The preheater housing is offgas piping. Pipe Class N11F (N08367) is specified and is acceptable.

Heating element sheath – Incoloy 800

Minimum Corrosion Allowance: **Housing – Pipe Class N11F (0.0425 inch)**
Heater Element Sheath – 0.0 inch

Inputs and References:

- Design Temperature (°F): 250 (24590-LAW-MED-LVP-00006)
- Design Pressure (psig): 15/FV (24590-LAW-MED-LVP-00006)
- Operating Inlet Temperature (°F) (max/norm): 126/124 (24590-LAW-MED-LVP-00006)
- Operating Outlet Temperature (°F) (max/norm): 162/160 (24590-LAW-MED-LVP-00006)
- Maximum Transient Temperature (°F): Bounding: 146 (in)/182 (out) (24590-LAW-MED-LVP-00006)
- Location: Room L-304H; out cell
- Operating conditions are as stated in the applicable sections of the Process Corrosion Data report (24590-WTP-RPT-PR-04-0001-04)

Assumptions and Justification (refer to Section 20– References)

- The electric heaters increase the nominal gas temperature to avoid condensation in the melter offgas HEPA filters.[2]
- Offgas is received from the Wet Electrostatic Precipitators (WESP) at 124 °F (126 °F max).[2]
- LCP, LFP, and RLD vessel ventilation streams are combined with the WESP offgas stream.[2]
- The combined melter offgas and vessel vents is heated to 160 °F (162 °F max) and is transferred to the HEPA filters.[2]
- Conditions shown for LVP-HTR-00001A/B in 24590-WTP-RPT-PR-04-0001-04 can be taken as being applicable to LVP-HTR-00003A/B.

Operating Restrictions:

- Develop a procedure to control decontamination of component.
- Develop procedure to control lay-up and storage; includes both before operation and during operation.
- Procedures are to be reviewed and accepted by MET prior to use.

Concurrence Approved By: Kevin Groves - kgroves Org Name: Plant Operations Passed: Jan 20, 2015, 6:58 am
Operations

REV	DATE	REASON FOR REVISION	ORIGINATE	CHECK	REVIEW	APPROVE
2	1/21/15	Complete re-write; no rev bars shown New format Update references Incorporate revised PCDS	DLAdler	RBDavis	APRangus 1/21/15	TErwin

CORROSION EVALUATION

REVISION HISTORY

1	7/18/12	Update design temperature Incorporate revised PCDS Revise mat'l for heater elements; text modified accordingly Recommend Corrosion Allowance New section q-Oxidation Minor edit & format changes Include AEA notice	DLAdler	RBDavis	APR	DJWilsey
0	10/27/05	Initial Issue	DLAdler	JRDivine	APR	APRangus
REV	**DATE**	**REASON FOR REVISION**	**PREPARER**	**CHECKER**	**MET**	**APPROVER**

Please note that source, special nuclear and byproduct materials, as defined in the Atomic Energy Act of 1954 (AEA), are regulated at the U.S. Department of Energy (DOE) facilities exclusively by DOE acting pursuant to its AEA authority. DOE asserts, that pursuant to the AEA, it has sole and exclusive responsibility and authority to regulate source, special nuclear, and byproduct materials at DOE-owned nuclear facilities. Information contained herein on radionuclides is provided for process description purposes only.

This bound document contains a total of 13 sheets.

CORROSION EVALUATION

Corrosion/Erosion Detailed Discussion

The combined offgas stream is split and each stream is passed through one of two parallel process offgas heaters (LVP-HTR-00001A or LVP-HTR-00003A). These offgas heaters utilize electric heating elements to increase the temperature of the combined off gas stream at least 18 °F in order to decrease the relative humidity of the offgas and prevent condensation in downstream components, particularly the HEPA filters. Sizing of these heaters is such that if one of them fails, the other unit can maintain the required combined stream offgas temperature increase on its own. In addition to these normal process heaters, there are Safety heaters (LVP-HTR-00001B and LVP-HTR-00003B) that are installed in series, one with each of the process heaters.

The LAW HEPA Preheater uses standard heater element technology: electric element with ceramic oxide packing surrounded by a metallic sheath. The "Commercial Off-The-Shelf" (COTS) heaters are attached to an ASME B16.5 flange, seal welded, and pressure tested. The offgas stream is passed through the HEPA preheaters in order to increase the gas temperature to avoid condensation in the melter offgas HEPA filters.

1 General/Uniform Corrosion Analysis

- **Background**

General corrosion or uniform corrosion is corrosion that is distributed more-or-less uniformly over the surface of a material without appreciable localization. This leads to relatively uniform thinning on sheet and plate materials and general thinning on one side or the other (or both) for pipe and tubing. It is recognized by a roughening of the surface and usually by the presence of corrosion products. The mechanism of the attack typically is an electrochemical process that takes place at the surface of the material. Differences in composition or orientation between small areas on the metal surface create anodes and cathodes that facilitate the corrosion process.

- **Component-Specific Discussion**

The anticipated dry-air conditions are not conducive to general corrosion and none is expected. Unless there is sustained 65 % relative humidity, corrosion cannot be sustained. The "housing" is the off-gas piping. Type 316L stainless steel is satisfactory for the housing. The offgas piping upstream of the heaters is pipe class N11F (N08367) which is also considered satisfactory. Incoloy® 800 is recommended for the heating elements and sheath because of its oxidation resistance.

2 Pitting Corrosion Analysis

Pitting is localized corrosion of a metal surface that is confined to a point or small area and takes the form of cavities. Pitting corrosion will only be a concern if sufficient moisture is present during normal operation. Shut-down and heat-up thermal transients may allow vapors to condense on the cold surfaces. Locations at crevices, at dead-legs, at low points, and under deposits may host conditions that support corrosion. The constituents in the off-gas vapor phase can be aggressive in oxidizing environments when mixed with moisture. Therefore, a material with a higher pitting corrosion resistance than Type 304L is necessary. Type 316L stainless steel, or better, is recommended for this application.

At the stated operating conditions, localized corrosion is not a major concern; corrosion will not proceed without an electrolyte present. Type 316L is recommended.

3 Crevice Corrosion Analysis

Crevice corrosion is a form of localized corrosion of a metal or alloy surface at, or immediately adjacent to, an area that is shielded from full exposure to the environment because of close proximity of the metal or alloy to the surface of another material or an adjacent surface of the same metal or alloy. Crevice corrosion is similar to pitting in mechanism. Crevice corrosion will only be a concern if sufficient moisture is present. The offgas humidity is controlled so that there will be no condensation during normal operations.

Justification for this position begins with the understanding that this is an air handling unit operating at elevated temperatures, above the dew point. Corrosion will not take place or initiate when no electrolyte is present.

4 Stress Corrosion Cracking Analysis

Stress corrosion cracking (SCC) is the cracking of a material produced by the combined action of environment, susceptible materials, and sustained tensile stress (residual or applied). Stainless steels and nickel alloys are susceptible to SCC and intergranular SCC due to the presence of halogens in aqueous solutions at temperatures greater than 140 °F. These conditions are not present in the preheater due to the absence of water during normal operations. Susceptibility of these alloys increases with carbide precipitation at the grain boundary adjacent to welds. Sensitization of the grain boundaries is prevented with the materials recommended. Either "L" grade, low carbon, stainless steel or niobium-stabilized stainless steel are specified to negate sensitization from becoming a corrosion issue. It is assumed that there will be no condensation in the unit; therefore, the HEPA preheater will not undergo stress corrosion cracking because insufficient moisture will be present.

This position is justified because of the temperature of the gas during operation will be greater than the dew point. Corrosion will not take place or initiate when no electrolyte is present.

CORROSION EVALUATION

5 End Grain Corrosion Analysis

End grain corrosion is preferential aqueous corrosion that occurs along the worked direction of wrought stainless steels exposed to highly oxidizing acid conditions. End grain corrosion typically is not a major concern, it propagates along the rolling direction of the plate, not necessarily through the cross sectional thickness. In addition, end grain corrosion is exclusive to metallic product forms with exposed end grains from shearing or mechanical cutting. This component does not have any pressure boundary cut ends exposed to the offgas. Also, end grain corrosion will not take place in the component because of the absence of sufficient moisture.

End grain corrosion is not expected to occur in the HEPA preheater because the temperature of the gas will be greater than the dew point of the gas therefore corrosion will not occur in the absence of an electrolyte.

6 Corrosion at Welds Analysis

The welds used in the fabrication will follow the WTP specifications and standards for quality workmanship. The materials selected for this fabrication are compatible with the weld filler metals and ASME/AWS practice. Using the welding practices specified for the project there should not be gross micro-segregation, precipitation of secondary phases, formation of unmixed zones, or volatilization of the alloying elements that could lead to localized corrosion of the weld.

This position is justified because the operating temperature and dry air conditions will not corrode because of the lack of the electrolyte for corrosion. Assuming that correct weld procedures are followed, no preferential corrosion of weld beads or heat-affected zones occurs in nitric acid or alkaline-based stream.

7 Microbiologically Influenced Corrosion Analysis

Microbiologically Influenced Corrosion (MIC) refers to corrosion affected by the presence or activity, or both, of microorganisms.

Typically, with the exception of cooling water systems and stagnant water, MIC is not observed in operating systems.

The HEPA preheater will operate at elevated temperatures and the offgas is dry. In this system, the stated operating conditions are not suitable for microbial growth.

8 Fatigue/Corrosion Fatigue Analysis

Corrosion-fatigue is the result of the combined action of cyclic stresses and a corrosive environment. The fatigue process is thought to cause rupture of the protective passive film, upon which stainless steel can actively corrode in the localized area of the film rupture. The corrosive environment may also act to reduce the stress necessary for film rupture. The result is that a metal exposed to a corrosive environment and cyclic mechanical load may initiate cracking at conditions at stress levels less than the endurance limit for the material.

The HEPA preheater is not cyclically operated; offgas flow is constant, steady and dry. Thermal cycles and therefore thermal stress is also low and associated with the start-up and shut down of the offgas system. Corrosion fatigue will not be observed in the HEPA preheater.

The conclusion that corrosion fatigue will not be a problem is based on the low mechanical and thermal cycling, as well as the lack of an electrolyte for corrosion.

9 Vapor Phase Corrosion Analysis

Vapor phase corrosion considers the gas and vapor constituents that form acid condensate. Acid gases are generated from the melter feed decomposing into CO_2, NOx, SOx, NH_3, etc. The corresponding acids can form when water is present; HCl, HF, HNO_3. Normally water is not present. When the heaters are operating, the temperature is raised to ensure that there is no water condensation and, therefore, no formation of acid droplets. The heaters are always operating when gas is flowing through the system. During system shutdown, start-up, or melter idling, moisture laden air could possibly flow through the HEPA preheaters. The duration of these conditions is very short, and any acid droplets formed by the deliquescence of water will not affect the life of this component.

Vapor phase corrosion will not occur in the HEPA preheater conditions because the maximum operation conditions for this component preclude the presence of sufficient moisture and concentrations of acid gas forming components.

10 Erosion Analysis

Erosion is the progressive loss of material from a surface resulting from mechanical interaction between a particle and that surface. Solid particle erosion can occur in air, steam, and water fluid systems. When the fluid propels the solid particles at a sufficient velocity and the particle mass is sufficient, the surface can be damaged by the combined effect of millions of individual erosion "scars". The offgas that enters the preheater flows through a mist eliminator section to remove liquid droplets and filter any large particulates. The volume fraction of particulates is low and insufficient to accelerate erosion. Also, gas velocities are not high enough to independently cause erosion.

The solids content and gas velocity in this components are sufficiently low that erosion is not a concern.

CORROSION EVALUATION

11 Galling of Moving Surfaces Analysis

Galling is a form of wear caused by a combination of friction and adhesion between moving surfaces. Under high compressive forces and movement, the friction temperatures cold-weld the two surfaces together at the surface asperities. As the adhesively bonded surface moves some of the bonded material breaks away. Microscopic examination of the galled surface shows some material stuck or even friction welded to the adjacent surface, while the softer of the two surfaces appears gouged with balled-up or torn lumps of material stuck to its surface.

Galling is most commonly found in metal surfaces that are in sliding contact with each other. It is especially common where there is inadequate lubrication between the surfaces. Softer metals will generally be more prone to galling; austenitic stainless steel is relatively soft and ductile and is known to gall easily. Martensitic stainless steel or precipitation hardened stainless steel or nitrogen strengthened austenitic stainless steels have higher surface hardness and therefore are resistant to galling.

The HEPA preheater does not have any moving surfaces.

12 Fretting/Wear Analysis

Fretting corrosion refers to corrosion damage caused by a slight oscillatory slip between two surfaces. Similar to galling but a much smaller movement, the corrosion products and metal debris break off and act as an abrasive between the surfaces, classic 3-body wear problem. This damage is induced under load and repeated relative surface motion, as induced for example by vibration. Pits or grooves and oxide debris characterize this damage, typically found in machinery, bolted assemblies and ball or roller bearings. Contact surfaces exposed to vibration during transportation are exposed to the risk of fretting corrosion. Movement of the metal sheath against a spacer plate, ring clip, or support plate is negligible.

The HEPA preheater does not have moving parts. Fretting corrosion is not expected in this component.

13 Galvanic Corrosion Analysis

Galvanic corrosion is an electrochemical process in which one metal corrodes preferentially to another when both metals are in electrical contact, in the presence of an electrolyte. Dissimilar metals and alloys have different electrode potentials, and when two are in contact in an electrolyte, one metal acts as anode and the other as cathode. The electropotential difference between the dissimilar metals is the driving force for an accelerated attack. A potential difference of more than 200 mV is needed for sufficient driving force to make a difference. Galvanic compatibility is one of the attributes used to select the WTP alloys. Austenitic stainless steels in contact with other austenitic stainless steels do not have sufficient electropotential difference to significantly influence the metal loss.

The HEPA preheater plates, frame, and support materials are all fabricated from austenitic stainless steel and 6% Mo alloy; materials are not dissimilar enough to experience significant potential difference. In addition, the gas is dry and contains insufficient moisture to act as an electrolyte. Galvanic corrosion is not expected to be a corrosion issue under these conditions.

14 Cavitation Analysis

Cavitation corrosion is defined as another synergistic process, the combined influence of mechanical disruption of the metal surface and the corrosion of the active metal. Cavitation occurs when the local fluid pressure drops below the vapor pressure of the fluid resulting in a liquid vapor interface or bubbles to form. Their collapse on the metal surface has sufficient energy to rupture the oxide film and depending on alloy, may be capable of removing metal. Depending on the pressures, this phenomena can produce steam at the pump suction leg creating what is called a "vapor lock". The fluid chemistry and alloy define corrosion characteristics of the oxide film, however localization of the cavitation produces a condition where the bubble collapse rate is greater than the ability to passivate, the normally passive alloy can experience accelerated loss. This is most likely to occur in pumps, valves (flow control), orifices, ejectors/eductors, and nozzles.

Cavitation is not expected in an offgas system.

15 Creep Analysis

Creep is defined as a time-dependent deformation at elevated temperature and constant stress, creep is a thermally activated process. The temperature at which creep begins depends on the alloy composition. Creep failures and stress rupture failures follow the same mechanism and are influenced by similar variables like temperature. Stress rupture is defined as bi-axial creep restricted to pipe like geometries. Creep is found in components subjected to heat for long periods and the creep rate generally increases as the temperature nears the melting point. The actual creep strain rate is defined by three regions depending on the temperature, stress and mechanism. The characterized "creep strain rate" typically refers to the rate in stage II creep. The creep temperature is different for each alloy, the Nickel Development Institute has cataloged the creep properties of the recommended alloys for this component (*High-Temperature Characteristics of Stainless Steels*, NIDI No. 9004, Nickel Development Institute). Creep temperature for these alloys are greater than 800 °F.

The HEPA preheater is operated at elevated temperatures; both creep and oxidation are considered as part of this corrosion evaluation. The HEPA preheater heating element design conditions are conducive to creep. Commercial-off-the-shelf Incoloy 800 sheaths provide high creep resistance for the heating elements. The other materials are not exposed to high temperatures.

16 Inadvertent Nitric Acid Addition

Addition of nitric acid to the offgas lines is not a plausible scenario.

CORROSION EVALUATION

17 Oxidation

Oxidation is the formation of an oxide scale and is dependent upon alloy, oxygen availability in the atmosphere, and temperature. Oxidation resistance of stainless steels and high nickel corrosion resistant alloys is due to the formation of chromium rich oxides (Cr_2O_3) on the surface. Once formed, the oxide scale slows further oxidation.

The heating elements are sheathed inside an Incoloy 800 tube. This alloy and design are oxidation resistant for long life and optimum heat transfer needed for heating the offgas. The temperature of the housing and other components is low, and oxidation will be insignificant.

18 Conclusion and Justification

At the stated operating conditions, uniform and localized corrosion are not a concern providing the reported dry-air conditions are maintained. Conditions which lead to end grain corrosion, weld corrosion, MIC, creep, and inadvertent nitric acid addition are not present in this system. Conditions which lead to fatigue or corrosion fatigue, vapor phase corrosion, galling, fretting, galvanic corrosion, and cavitation are not present in this component. The recommended corrosion allowance provides sufficient protection for erosion of the housing wall and internal members.

Type 316L stainless steel or UNS N08367 are sufficiently resistant to uniform corrosion and are suitable for the housing and flange. At the stated operating conditions, localized corrosion is not a major concern because the offgas is normally dry. Type 316L is recommended for its improved resistance to pitting corrosion. UNS N08367 would also be sufficiently resistant to localized corrosion. Incoloy® 800 is recommended for the COTS heating elements sheath.

19 Margin

Margin between design operating conditions and corrosion-caused failure is sufficient. The largest contributor to the total margin is the absence of the sufficient moisture needed to form a corrosive electrolyte. If there is no electrolyte, there can be no corrosion.

Per 24590-WTP-SRD-ESH-01-001-02, *Safety Requirements Document Volume II,* Appendix H, "When erosion and corrosion effects can be shown to be negligible or entirely absent, a design corrosion allowance need not be specified." However, for conservatism and integration with other system components a 0.010 inch corrosion allowance is recommended for the housing.

CORROSION EVALUATION

20 References

1. 24590-LAW-MED-LVP-00006 – *Mechanical Data Sheet.*
2. 24590-WTP-RPT-PR-04-0001-04 – *WTP Process Corrosion Data-Volume 4.*
3. 24590-WTP-SRD-ESH-01-001-02, *Safety Requirements Document Volume II.*
4. NIDI. *High-Temperature Characteristics of Stainless Steels,* Publication No. 9004, Nickel Development Institute. Toronto, Ontario, Canada.

Additional Reading

- 24590-WTP-GPG-M-047, *Preparation of Corrosion Evaluations.*
- 24590-WTP-RPT-M-01-001, *Materials Selection Report.*

CORROSION EVALUATION

PROCESS CORROSION DATA SHEET (extract)

Component(s) (Name/ID #) Melters Offgas HEPA Preheater (LVP-HTR-00001A&B & LVP-HTR-00003A/B)

Facility LAW

In Black Cell? NO

Chemicals	Unit	Stream ID LVP04 GASEOUS
Ar	ppmV	8265
CO	ppmV	431
CO2	ppmV	26052
HCl	ppmV	291
HF	ppmV	162
NH3	ppmV	22
NO2	ppmV	10
P2O5(s)	mg/m3	1
SO2	ppmV	10
SO3(s)	mg/m3	1
RH	%	13.91
Suspended Solids	wt%	0
Temperature	°F	162

CORROSION EVALUATION

Figure C- 16 LVP-HTR-00001A/B Gaseous PCDS

	Stream ID	
	LVP03a	LVP04
Properties		
Suspended Solids [wt %]	0	0
Total Salts [wt %]	0.01	0.03
Sodium Molarity [M]	n/a	n/a
Relative Humidity [%]	70.10	13.91
pH	n/a	n/a
Anti-Foam Agent [ppm]	2.11E-03	5.19E-03
TOC [kg/h]	5.75E-02	4.25E-01
Pressure [bar]	0.96	0.95
Temperature [C]	52.22	72.22
Temperature [F]	126.00	162.00
Water Flow Rate [kg/hr]	303.79	303.79
Total Aqueous Flow Rate [kg/hr]	303.84	303.89
Total Flow Rate [kg/hr]	5.20E+03	5.20E+03
UserNote	VIT VAPOR LAW Vapor to LVP-HTR-00001A/B	VIT VAPOR Primary HEPA Electric Heater Offgas Discharge
GASEOUS [ppmV or mg/m³]		
Ar	8185	8265
CH3I	0	0
Cl2	0	0
CO	257	431
CO2	15673	26052
F2	0	0
H2	0	0
HCl	291	291
HCN	0	0
HF	162	162
I2	0	0
N2	694077	699630
NaCl(s)	22	20
NaCN(s)	0	0
NaF(s)	9	8
NaI(s)	0	0
NH3	21	22
NO	2040	2110
NO2	9	10
O2	187694	188771
P2O5(s)	1	1
PO2	0	0
SO2	0	10
SO3(s)	1	1

Note: Concentrations for constituents representing particulates (as denoted by suffix "(s)" in their name) are reported in units of mg/m3; all others are reported in units of ppmV

GENERAL NOTE FOR USE OF PCDS:

- *The information provided by the PCDS report is intended solely for use in support of the vessel material selection process and Corrosion Evaluations. The inputs, assumptions, and computational/engineering models used in generating the results presented herein are specific to this effort. Use of the information presented herein for any other purpose will require separate consideration and analysis to support justification of its use for the desired, alternative purpose.*
- *The process descriptions in this report cover routine process operations and non-routine (infrequent) process operations, when such exist, that could impact corrosion or erosion of process equipment.*
- *The data in the non-shaded columns of the PCDSs has NOT been adjusted to comply with the highest expected, vessel-specific operational conditions.*
- *The process descriptions provided in this report are for general information and reflective of the corrosion engineer's analysis for transparency, the information is current only at the time this document is issued. These process descriptions should not be referenced for design.*

6.6.1 Description of Vessel/Equipment

The LAW Secondary Offgas/Vessel Vent Process (LVP) System is designed to treat the offgas from the LAW Primary Offgas Process (LOP) System and the LAW Facility vessel vents. The purpose of the LVP System is to remove almost all remaining particulates, miscellaneous acid gases, nitrogen oxides, VOCs, and mercury from the LAW Facility offgas that have not been removed by the LOP system.

Figure 10 is a sketch of the input and output arrangement of streams for all equipment within the LVP System. Streams that are not primary routes (infrequent transfers) are represented with dashed lines.

Figure 10 LVP System Sketch

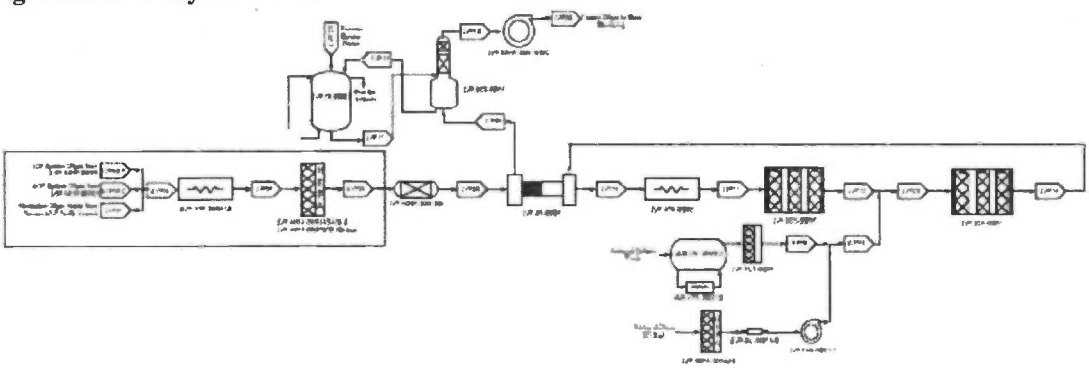

Figure 10a LVP System Sketch (detail of pertinent portion of system)

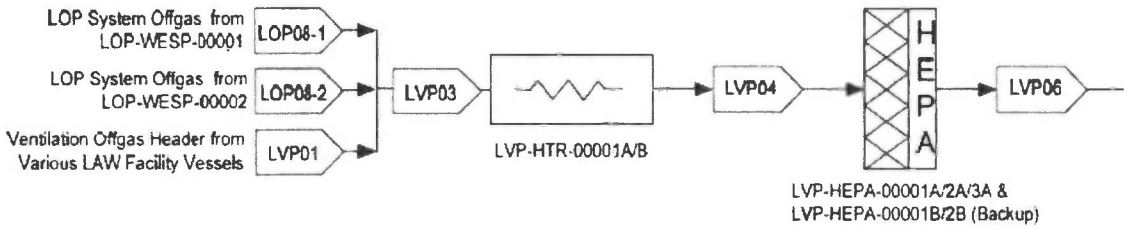

6.6.2 System Functions

The process functions of this system are as follows:

- Receive LAW Offgas from LOP System and LAW Facility Vessel Ventilation Streams
- Receive Reagents Streams Such as Ammonia or Dilution Air to Ensure Offgas Component Destruction
- Treat Offgas to Ensure Requirements are Met Before Emitting to Atmosphere
- Transfer Offgas to Stack
- Transfer Liquid Effluents to RLD-VSL-00017A/B

These vessels perform additional system functions beyond the process functions, but these are outside the scope of this document. The non-process functions are not discussed any further in this document. However, they are listed below for completeness:

- Confine Hazardous Materials
- Flush System Components
- Report System Data

6.6.3 Description of Process Functions

All process streams have been taken from Process Flow Diagrams 24590-LAW-M5-V17T-00010 and 24590-LAW-M5-V17T-00011 and associated drawing change notices (DCNs) 24590-LAW-M5N-V17T-00012/15/17/29 and 24590-LAW-M5N-V17T-00012/19/23/29, respectively. The P&IDs have also been looked at to obtain the most accurate flow diagram. These are as follows: 24590-LAW-M6-LVP-00001001 / 1002 / 1003 / 1004 / 1005 / 1006 / 2001 / 2002 / 2003 / 2004 / 2005 / 2006 / 3001 / 4001 / 4002 / 4003 / 5001 / 5002 and 24590-BOF-M6-AMR-00002001 / 2002 / 3001 / 3002 / 5001. See Section 7.1.3 for corresponding references in this section. A description of the process function of each piece of equipment is listed as follows:

Equipment	Process Function
LVP-HTR-00001A/B	The electric heater increases the nominal gas temperature to avoid condensation in the melter offgas HEPA filters.
LVP-HEPA-00001A/2A/3A (1B/2B as Backup)	HEPA filters provide final removal of radioactive particulates to protect downstream equipment from contamination.

6.6.3.1 Receipt Streams

The LVP system primarily receives LAW offgas from the LOP system and LAW Facility vessel ventilation streams. Other LVP system equipment receives various streams to help process the offgas. The receipt streams for each piece of equipment are listed as follows, by vessel, in order of process flow:

LVP-HTR-00001A/B

- LVP03 - WESP offgas from LOP-WESP-00001/2 and vent header from various LAW facility vessels

LVP-HEPA-00001A/2A/3A and LVP-HEPA-00001B/2B (Back-Up)

- LVP04 - Offgas from LVP-HTR-00001A/B

CORROSION EVALUATION

6.6.3.1.1 LVP03 - WESP Offgas from LOP-WESP-00001/2 and Vent Header from Various LAW Facility Vessels

Stream LVP03 is the combination of the vessel ventilation streams from LCP-VSL-00001/2, LFP-VSL-00001/3, LFP-VSL-00002/4, RLD-VSL-00003, RLD-VSL-00004, and RLD-VSL-00005. Stream LVP03 also combines the vessel vent stream with WESP offgas from LOP-WESP-00001/2.

Molarity
N/A

Temperature
The temperature of stream LVP03 will normally be 124°F (24590-LAW-M4C-LOP-00001, pg. 37, Cell Q26, Ref. 7.1.4(12)). The maximum temperature is 126°F (24590-LAW-M4C-LOP-00001, pg. 41, Cell Q26, Ref. 7.1.4(12)).

Solids Concentration
The solids concentration for stream LVP03 will normally be near zero or trace solids.

Vapor Density
The vapor density of stream LVP04 will normally be 5.36E-2 lb/ft^3 to 5.23E-2 lb/ft^3 (24590-LAW-M4C-LOP-00001, pg. 37, Cell AI26; pg. 41, Cell AI26, Ref. 7.1.4(12)).

Liquid pH
N/A

6.6.3.1.2 LVP04 - Offgas from LVP-HTR-00001A/B

Stream LVP04 is the combined melter offgas and vessel vents that have been heated by LVP-HTR-00001A/B.

Molarity
N/A

Temperature
The temperature of stream LVP04 will normally be 160°F (24590-LAW-M4C-LOP-00001, pg. 37, Cell Q28, Ref. 7.1.4(12)). The maximum temperature is 162°F (24590-LAW-M4C-LOP-00001, pg. 41, Cell Q28, Ref. 7.1.4(12)).

Solids Concentration
The solids concentration for stream LVP04 will normally be near zero or trace solids.

Vapor Density
The vapor density of stream LVP04 will normally be 4.95E-2 lb/ft^3 to 4.79E-2 lb/ft^3 (24590-LAW-M4C-LOP-00001, pg. 37, Cell AI28; pg. 41, Cell AI28, Ref. 7.1.4(12)).

Liquid pH
N/A

CORROSION EVALUATION

6.6.4 Process Modes

6.6.4.1 Normal Operations

Based on the assessment of streams frequently transferred in and out of the LVP System equipment, the following normal processing modes are considered:

LVP-HTR-00001A/B

- LVP03 - WESP Offgas from LOP-WESP-00001/2 and Vent Header from Various LAW Facility Vessels
- LVP04 - Offgas from LVP-HTR-00001A/B

6.6.5 Summary of Processing Conditions for LVP System

6.6.5.1 Normal Operations

The following table summarizes the normal processing modes for LVP System equipment.

Stream Number	Weight % UDS		Na Molarity		Temperature (°F)	
	normal	upper	normal	upper	normal	upper
LVP-HTR-00001A/B						
LVP03 (in)	0	trace	n/a	n/a	124	126
LVP04 (out)	0	trace	n/a	n/a	160	162

6.6.5.2 Infrequent Operations

None identified.

U.S. Department of Energy, Office of River Protection Certification

The following certification statement is provided for the submittal of the Hanford Facility Resource Conservation and Recovery Act Permit Modification Notification LAW-26a, Rev 1.

I certify under penalty of law that this document and all attachments were prepared under my direction or supervision in accordance with a system designed to assure that qualified personnel properly gather and evaluate the information submitted. Based on my inquiry of the person or persons who manage the system, or those persons directly responsible for gathering the information, the information submitted is, to the best of my knowledge and belief, true, accurate, and complete. I am aware that there are significant penalties for submitting false information, including the possibility of fine and imprisonment for knowing violations.

K. W. Smith

K. W. Smith, Manager
U.S. Department of Energy,
Office of River Protection

9/24/2015

Date

Bechtel National, Inc. Certification

The following certification statement is provided consistent with Contract No. DE-AC27-01RV14136, Section H.26, Environmental Permits, paragraph (g) for the submittal of the Hanford Facility Resource Conservation and Recovery Act Permit Modification Notification LAW-026a, Rev 1.

I certify under penalty of law that this document and all attachments were prepared under my direction or supervision in accordance with a system designed to assure that qualified personnel properly gather and evaluate the information submitted. Based on my inquiry of the person or persons who manage the system, or those persons directly responsible for gathering the information, the information submitted is, to the best of my knowledge and belief, true, accurate, and complete. I am aware that there are significant penalties for submitting false information, including the possibility of fine and imprisonment for knowing violations.

M. G. McCullough
Project Director
OXENFORD DELEGATED FOR MGM

9/4/15
Date