OFFICE OF RIVER PROTECTION
P.O. Box 450, MSIN H6-60
Richland, Washington 99352

JUL 0 9 2015

15-ECD-0026

Ms. Jane A. Hedges, Program Manager
Nuclear Waste Program
Washington State
Department of Ecology
3100 Port of Benton Blvd.
Richland, Washington 99354

Ms. Hedges:

SUBMITTAL OF THE HIGH-LEVEL WASTE MELTER HANDLING SYSTEM DESIGN DESCRIPTION TO THE ADMINISTRATIVE RECORD OF THE HANFORD FACILITY RESOURCE CONSERVATION AND RECOVERY ACT PERMIT

Reference: WA7890008967, "Dangerous Waste Portion of the Hanford Facility Resource Conservation and Recovery Act Permit for the Treatment, Storage, and Disposal of Dangerous Waste, Operating Unit 10, 'Waste Treatment and Immobilization Plant.'"

This letter transmits the system design description (superseding the system description) for the High-Level Waste Melter Handling System, 24590-HLW-3ZD-HMH-00001, *High-Level Waste Melter Handling System Design Description.*

As stated in the Reference, Permit Condition III.10.C.15.a.i.A, system descriptions are to be submitted to the Washington State Department of Ecology to be incorporated in to the Dangerous Waste Permit Administrative Record.

If you have any questions, please contact me, or your staff may contact Lori A. Huffman, Director, Environmental Compliance Division, (509) 376-0104.

Robert G. Hastings, Assistant Manager
Technical and Regulatory Support

ECD:GMN

Attachment

cc: See page 2

cc w/attach:
B.L. Curn, BNI
B.G. Erlandson, BNI
C.M. Gallaway, BNI
R.J. Landon, BNI
M. McCullough, BNI
S.K. Murdock, BNI
Administrative Record (WTP H-0-8)
BNI Correspondence
Environmental Portal, LMSI

cc electronic:
J. Cantu, Ecology (2 hard copies)
A.S. Carlson, Ecology (6 hard copies, Public Review)
M.E. Jones, Ecology
J.K. Perry, MSA
A.C. McKarns, RL
D.J. Sommer, SCS

cc w/o attach:
J. Cox, CTUIR
S.G. Harris, CTUIR
S.L. Dahl, Ecology
D. McDonald, Ecology
G.P. Bohnee, NPT
K. Niles, Oregon Energy
E.D. MacAlister, RL
R. Jim, YN

Attachment
15-ECD-0026
(110 Pages)

HLW Melter Handling (HMH) System Design Description

24590-HLW-3ZD-HMH-00001, Rev. 0

HLW Melter Handling (HMH) System Design Description

Document title: HLW Melter Handling (HMH) System Design Description

Document number: 24590-HLW-3ZD-HMH-00001

Revision number: 0

Type: ☒ System Design Description
☐ Facility Design Description

Originator(s): James Breuninger, Brian Johnson

Checked by: Phil Townsend

Checker's signature: _____ (Signature) 3-5-15 (Date)

Concurrence: Mark Johnson

Concurrence signature: SEAN SMITH, HLW DEM for (Manager of Production Engineering Signature) 3/6/15 (Date)

Concurrence: Russell Daniel

Concurrence signature: Russell B Daniel (Project Technical Director and Design Authority Signature) 3/7/15 (Date)

Approved by: Natalie Harkey

Approver's position: Systems Engineering Manager

Approver's signature: _____ (Signature) 3/9/2015 (Date)

Validation

Appl.	Requirement Area	Requirement Developer	Signature	Date
☒	Architectural Design	Joel Evans		12/11/14
☒	Civil/Structural Design	Joel Evans		12/11/14
☒	Controls & Instrumentation Design	W. UNDERHILL		12/11/14
☒	Commissioning	C.S. Winslow for M. Ross Hamlett per email		12/12/14
☐	Electrical Design & AHJ			
☒	Fire Protection Systems Design	C.S. Winslow for David Hanson per email		12/15/14
☒	Fire Protection AHJ			
☒	HVAC Design			
☒	Mechanical Handling Design	J.S. LEAM		12.10.14
☒	Mechanical Systems Design	J.S. LEAM		12.10.14
☒	Plant Design	Travis Vincent		1/7/15
☐	Process Engineering			
☐	Interface (External)			
☐	Interface (Internal)			
☒	System Functions and Requirements	Phil Townsend		12-11-15
☒	Equipment Environmental Qualification	G. RAJAGOPAL	G. Rajagopal	12-10-14
☒	Equipment Seismic Qualification	M. HABIB	M. Habib	12/10/14
☒	Materials Engineering / Technology			
☒	Plant Software Design			
☒	Reliability, Availability, Maintainability, Inspectability ~~(Plant Engr)~~ PROCESS	R VOLLE		2/6/15 12/11/14
☒	Environmental Permitting (ESH)	Bang Chen	B Chen	3/6/15
☐	Fire Safety (ESH)			
☒	Nuclear Safety Engineering	Daniel J Schmitt		1-8-15
☐	Criticality Safety			
☒	Radiological Engineering	Kyle Pettier		12/30/14
☒	Industrial Safety/Hygiene (ES&H)	C.S. Winslow for Scott Nickerson per Email		12/23/14
☒	Mission (WTP Contract functional/performance rqmts)			
☒	Operations, Maintenance, Human Factors	Daniel Rovira	C.S. Winslow for Rar Email	12/10/14
☒	Quality Assurance	GREGORY L. BUTT	Gregory L. Butt	12/10/14
☐	Safeguards & Security			
☒	Startup	C.S. Winslow for Rich Gamble per email		12/30/14
☐	Transportation & Logistics			

* Validation not required for alpha/preliminary design description documents.

History Sheet

Rev	Reason for revision	Revised by
0	Initial issue. Supersedes 24590-HLW-3YD-HMH-00001, Rev. 4, *System Description for the HLW Melter Handling System (HMH)*	J. Breuninger/B. Johnson

Contents

1 Introduction 1
1.1 System Identification 1
1.2 Limitations and Scope 1
1.3 Ownership and Maintenance 2
1.4 Definitions/Glossary 2
1.5 Acronyms and System Designators 3
2 General Overview 4
2.1 System Functions/Safety Functions 7
2.2 System Classification 14
2.3 Basic Operational Overview 14
3 Design Requirements 15
3.1 Requirements 15
3.2 Bases 15
3.3 References 16
3.4 General Requirements 16
3.4.1 Mission and Functional / Performance Requirements (Incl. States/Modes) 16
3.4.2 Nuclear Safety, ALARA, Environmental and Other Regulatory Requirements 20
3.4.3 System Interface Requirements 22
3.4.4 Other Technical, Specialty, Operations and Maintenance Requirements 23
3.5 Shield and Containment Door Requirements 27
3.5.1 Mission and Functional and Performance Requirements (Incl. States/Modes) 27
3.5.2 Nuclear Safety, ALARA, Environmental and Other Regulatory Requirements 29
3.5.3 System Interface Requirements 29
3.5.4 Other Technical, Specialty, Operations, and Maintenance Requirements 30
3.6 Melter Transfer Path Components 31
3.6.1 Mission Functional / Performance Requirements (incl. states/modes) 31
3.6.2 Nuclear Safety, ALARA, Environmental and Other Regulatory Requirements 33
3.6.3 System Interface Requirements 33
3.6.4 Other Technical, Specialty, Operations and Maintenance Requirements 34
3.7 Melter Overpack 34
3.7.1 Mission and Functional / Performance Requirements (incl. states/modes) 34
3.7.2 Nuclear Safety, ALARA, Environmental and Other Regulatory Requirements 34
3.7.3 System Interface Requirements 35
3.7.4 Other Technical, Specialty, Operations and Maintenance Requirements 35
3.8 Monitoring and Controls Requirements 36
3.8.1 Mission and Functional / Performance Requirements (incl. states/modes) 36
3.8.2 System Interface Requirements 36
3.8.3 Other Technical, Specialty, Operations and Maintenance Requirements 39
3.9 Other Structures, Systems, and Components Requirements 39
3.9.1 Mission and Functional / Performance Requirements (Including States/Modes) 39
3.10 Relevant Codes and Standards 40

3.10.1 Codes of Record 40
3.10.2 WTP Design Criteria, Design Guides, and General Specifications 41

4 System Description 43

4.1 Configuration Information 43
4.1.1 Description of System, Subsystems, and Major Components 44
4.1.2 Boundaries and Interfaces 64
4.1.3 Physical Layout and Location 67
4.1.4 Principles of Operation 70
4.1.5 System Reliability Features 71
4.1.6 System Control Features 71

4.2 Operations 81

4.3 Testing and Maintenance 81

4.4 Supplemental Information 81

5 Sources, Bases, and Other References 82

5.1 Source / Basis References 82

5.2 Other References 82

5.3 Design References 83

Appendices

Appendix A - Test Objectives, Conditions, and Acceptance Criteria A-1

Appendix B - Descriptions of System Functional Flow and Interactions B-1

Appendix C - Active Safety Instruments and Functions C-1

Appendix D - Reserved – System Procedures D-1

Appendix E - Reserved – System History E-1

Tables

Table 2-1: Functional Analysis and Crosswalk to Requirements 10

Table 3-1: HMH Seismic Design Categories 18

Table 3-2: HMH System Safety Designations 20

Table 3-3: HMH System Interfaces with HSH 22

Table 3-4: HMH System Interfaces 23

Table 3-5: HLW HMH Applicable Codes and Standards 40

Table 3-6: WTP Design Criteria, Guides, and General Specifications Applicable to HLW HMH 42

Table 4-1: Roll-Up Doors Interlocks 73

Table 4-2: C2 Containment Doors Interlocks 74

Table 4-3: C2/C3 Shield Doors Interlocks 75

Table 4-4: C5 Shield Doors Interlocks 77

Figures

Figure 2–1: High-Level Waste Facility Melter Handling System Context Diagram 5
Figure 2–2: HMH System Simplified Mechanical Flow Diagram Rail Stop and Bogie Positions 6
Figure 2–3: High-Level Waste Facility Melter Handling System Functional Block Diagram 8
Figure 4-1: Elevation +0 FT Key Plan 44
Figure 4-2: Melter Transport Bogie 46
Figure 4-3: Melter Support Base 48
Figure 4-4: Rail System 50
Figure 4-5: Proposed Melter Staging Cart 51
Figure 4-6: Proposed Melter Staging Cart Rails 52
Figure 4-7: Melter Overpack 55
Figure 4-8: C2 Containment Door 58
Figure 4-9: C2/C3 Shield Door 60
Figure 4-10: C5 Shield Door 62
Figure 4-11: C5 Shield Door Fascia 64
Figure 4-12: Melter Assembly Pad 68
Figure 4-13: C5 Shield Door and Melter Overpack Interface 70

1 Introduction

1.1 System Identification

This system design description defines the technical and functional/performance requirements of the high-level waste (HLW) melter handling system (HMH). This document details the melter handling requirements, environmental compliance requirements, and authorization basis requirements of the HMH system as it is currently known and understood. This system design description describes the process and functional requirements of the HMH system, including:

- Mechanical handling equipment design
- Services and utility requirements, operating materials and supplies, and other external interfaces
- Operations limits and design bases
- Other criteria and requirements pertinent to the design of the HMH system

The HMH system transfers new and failed/spent melters and other large process equipment between the melter assembly pad (MAP) and the melter caves. The boundaries, system interfaces and functional description of the HMH system is provided in Sections 2 and 3.4.3.

1.2 Limitations and Scope

The scope of this document is to provide an authoritative source for the collected set of requirements applicable to the design of the HMH system inclusive of interface requirements with other systems. The SDD scope includes and is limited to HMH system features that support production and/or protect equipment, personnel, and the environment. The SDD is prepared in accordance with 24590-WTP-3DP-G04B-00093, *System and Facility Design Descriptions*. The intended use of these collected requirements is to establish the following:

- Inform the HMH system design effort
- Provide a validated basis upon which to confirm implementation of design requirements
- Provide the expected means of verification for requirements, including those that are post-construction (i.e., startup and commissioning test objectives and acceptance criteria)

All requirements established in this document are intended to be verified to be implemented in design and/or physical configuration using a graded approach commensurate with importance and risk. Deviations from the identified expected means of verification are allowed.

Where numeric values are provided within requirements in Section 3, these values are provided without additional margin. For example if a value is established in the Basis of Design, no attempt is made to remove any margin that may or may not have gone into the establishment of that value, neither has any margin been added. Where values are stated as minimums or maximums, there is no exception that additional margin be applied in the verifications that the design requirements have been met. Testing required to be performed in accordance with external codes and standards must follow the rules established in those documents.

This document is intended to be used in support of design development, design verification, turnover, startup testing, and commissioning activities. This document will be maintained current relative to changes in source requirements documents. Updates shall be made concurrent with these changes to

source requirements, or implementation shall be tracked for completion in accordance with 24590-WTP-GPG-ENG-0170, *Impact Evaluation.*

Engineers are expected to be able to use the requirements in Section 3 of this document as input for design development without recourse to the upper-tier source documents or searches of the Design Criteria Database (Technical Requirements Management System). Design engineers are still required to ensure that requirements contained with the discipline/functional standards incorporated by reference in Section 3 are followed. These documents contain additional criteria that are based on applications of external codes/standards, corporate best practices, and engineering management expectations for a consistent approach to design.

Certain requirement statements in this document are preceded by a "**[HOLD]**" notation. This notation is used when there are unresolved technical issues, known inconsistencies among source requirements, or other management suspensions of work requiring resolution. Requirements with the "**[HOLD]**" notation may be used to proceed with preliminary or committed design (with inclusion of appropriate holds) but shall not be used in support of fabrication or construction until the "**[HOLD]**" is removed.

The contents of Section 4 are being developed in a phased approach in support of future operations and maintenance. At this revision, only the contents of Sections 4.1.1 through 4.1.4 and 4.1.6 have been updated and verified. Sections 4.1.5, 4.2, 4.3 and 4.4 are currently reserved and will be updated in a later phase after the work to support completion of these sections has been completed.

1.3 Ownership and Maintenance

The Design Authority (DA) organization is responsible for the preparation and maintenance of this document through turnover of the included systems to Operations. Thereafter, maintenance of this document is responsibility of the Plant Engineering organization; however, the Engineering DA organization retains responsibility for the establishment and definition of design requirements.

1.4 Definitions/Glossary

Confinement - For consistency, regardless of usage elsewhere, *confinement* is used in this document to denote the controls used to prevent or minimize the release or migration of airborne contaminants, including aerosols, hazardous vapors, or gases.

Containment - For consistency, regardless of usage elsewhere, *containment* is used in this document to denote the controls used to prevent or minimize the release or migration of liquid or liquid-entrained contaminants.

Primary confinement/containment - The structures, systems, or components (SSCs) and their associated boundaries that confine/contain airborne and liquid contaminants under normal conditions.

Secondary confinement/containment - The structures or other design features that capture and prevent further spread or migration of airborne/liquid contaminants after they have escaped primary confinement or containment.

1.5 Acronyms and System Designators

Acronyms

A, I, D, T	analysis, inspection, demonstration, test
AISC	American Institute of Steel Construction
ALARA	as low as reasonably achievable
ASD	Adjustable Speed Drive
ANSI	American National Standard Institute
ASME	American Society of Mechanical Engineers
AWS	American Welding Society
BNI	Bechtel National, Inc.
BOD	*Basis of Design*
C5V	HLW C5 Ventilation System
CCTV	closed circuit television
CM	Commercial
COM	commissioning
CON	construction
CTN	component tag number
D&D	decontamination and decommissioning
DBE	Design Basis Earthquake
DIW	demineralized water
DOE	US Department of Energy
DOT	US Department of Transportation
DVR	design verification report
E-stop	Emergency Stop
EQP	equipment qualification package
GTC	general test criteria
HEPA	High Efficiency Particulate Air (filter)
HLW	High-Level Waste (Facility)
HMP	HLW Melter Process System
HSSWAC	Hanford Site Solid Waste Acceptance Criteria
HVAC	heating, ventilation, and air conditioning
ICD	Interface Control Document
ICN	Integrated Control Network
IEEE	Institute of Electrical and Electronics Engineers
IHLW	immobilized high-level waste
LOI	Local Operator Interface
MAP	Material Acceptance Plan
MAP	Melter Assembly Pad
MC-x	Melter Cave (1 or 2)
MHJ	mechanical handling control
NFPA	National Fire Protection Association
NSE	Nuclear Safety Engineering
ORD	*Operations Requirements Document*
PDSA	preliminary documented safety analysis
P&ID	piping and instrumentation diagram
QL	Quality Level
ROIN	requirement object identification number
SC	safety class

SC-x	seismic category
SCFM	standard cubic feet per minute
SDC	safety design class
SDD	System Design Description
SS	Safety Significant
SRD	*Safety Requirements Document,* Volume II
SSC	structures, systems, or components
SQR	supplier quality representative
SU	startup
SUB	subcontractor
TAC	test acceptance criteria
UNC	Unified National Coarse (thread)
WAC	Washington Administrative Code
WTP	Hanford Tank Waste Treatment and Immobilization Plant

System Designators

DIW	demineralized water system
HMH	melter handling system
HSH	melter cave support handling system
LVE	low voltage electrical (480/208/120 V) system
MHJ	mechanical handling control system
PTJ	process and mechanical handling CCTV system
RLD	radioactive liquid waste disposal system

2 General Overview

The melter handling system (HMH) provides the mechanical handling equipment to move melters, process vessels, and other large equipment into and out of either of the two melter caves in the HLW facility. The HLW melters have an operational lifespan estimated to be 5 years and the WTP is estimated to operate for 40 years. Due to the shielding and containment concerns as well as the size, weight, and acceleration limitations of the HLW melters, a dedicated system of resources is required for melter installation and removal. Once the operational lifespan of a melter runs outs, system HMH retrieves the spent / failed melter into a shielded overpack and the overpack is moved to an interim storage area. When the spent / failed melter within the overpack have been verified to meet the requirements for final disposal, the spent / failed melter and overpack will be transferred from the interim storage area to the final disposal area by a DOE-designated contractor.

Figure 2–1 provides a contextual depiction of the HMH system in terms of its primary interrelationships with other systems and utilities. This diagram does not differentiate among some utilities that have both normal and safety service provisions. This diagram is used in support of functional and performance definition at the system level. Figure 2–2 provides a mechanical flow diagram of the overall HMH system including rail stop and bogie positions. Refer to Section 1.5 for the list of relevant system designators.

Figure 2–1: High-Level Waste Facility Melter Handling System Context Diagram

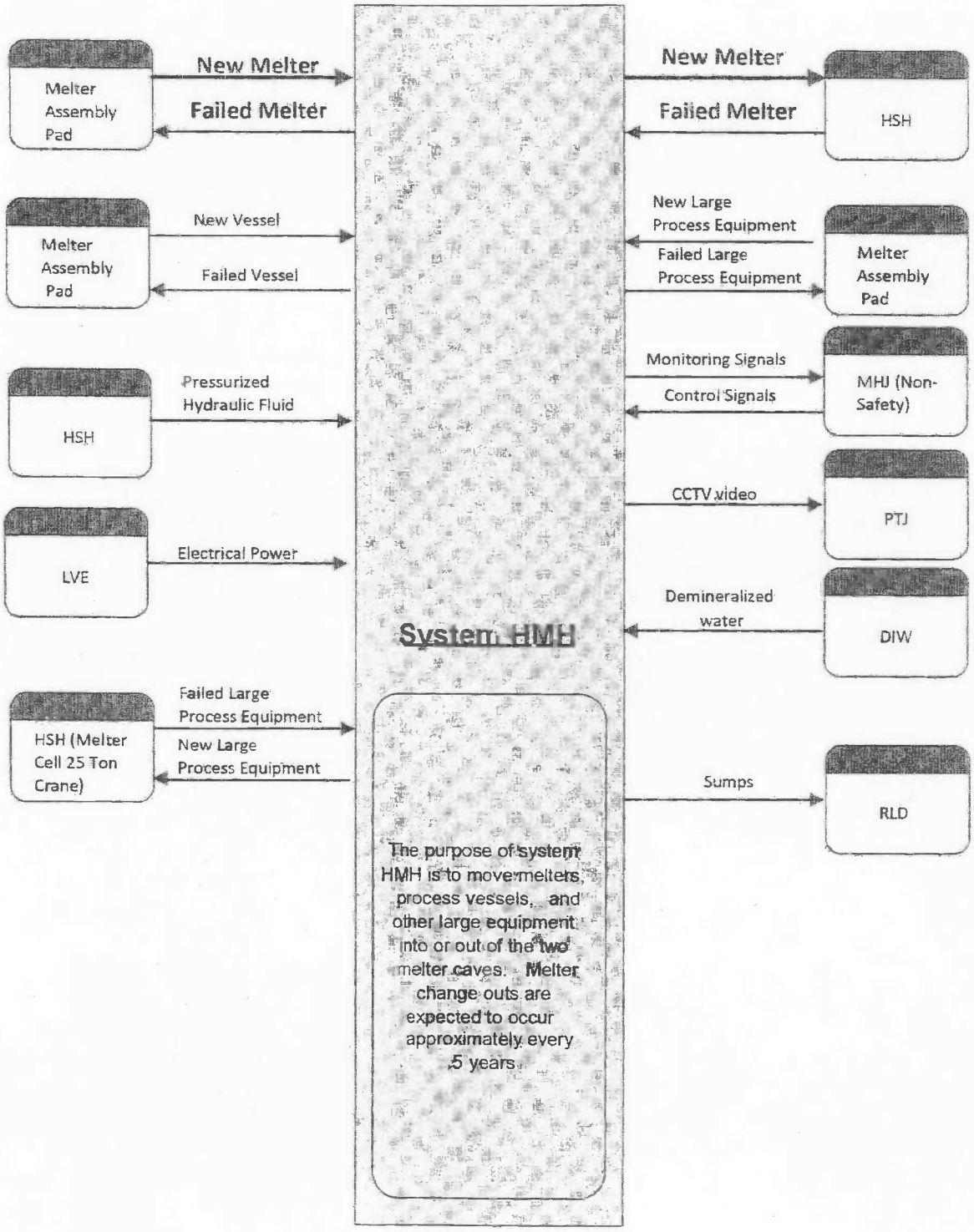

Figure 2–2: HMH System Simplified Mechanical Flow Diagram Rail Stop and Bogie Positions

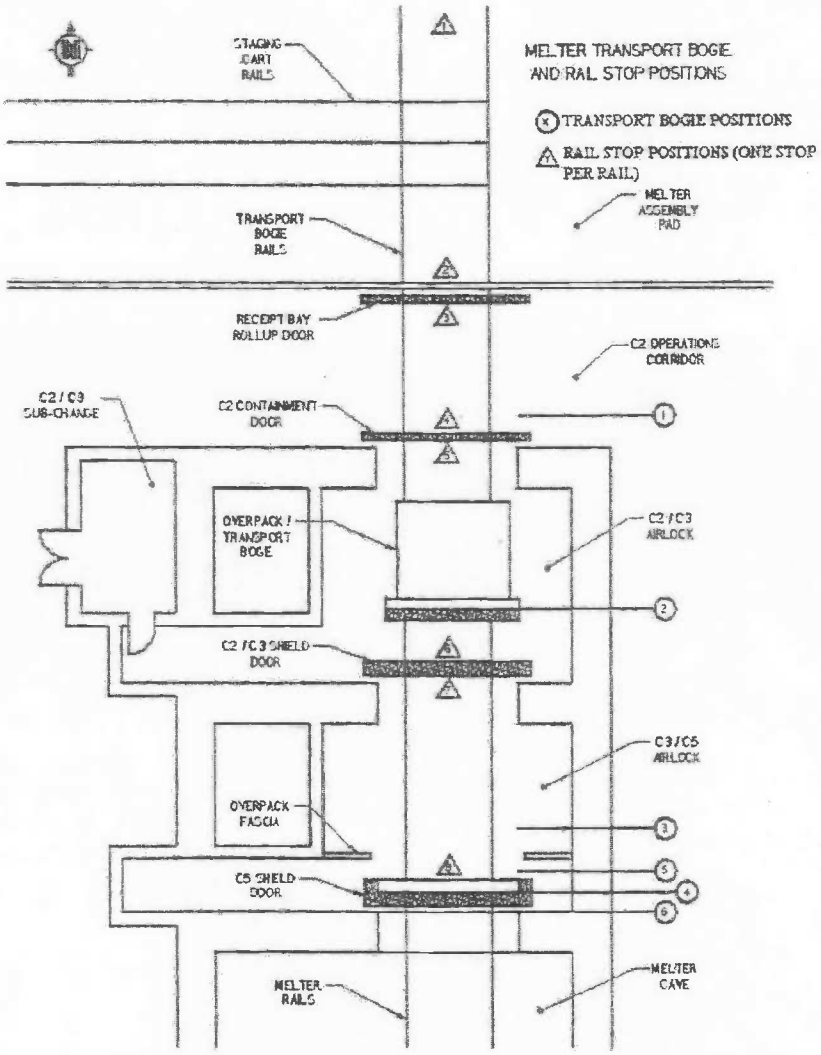

Figure A-1 Mechanical Flow Diagram Rail Stop and Transport Bogie Positions

2.1 System Functions/Safety Functions

This section defines the HMH functions and attributes that need to be addressed by the system design. Figure 2–3 provides the functional block diagram for the HMH system, indicating the internal and external systems and utilities that provide the primary support or interface for that function. Section 3 provides the design and performance design requirements to meet both functional and other requirements.

System interfaces are provided for reference only. See Section 1.5 for the list of relevant system designators.

The functions in Figure 2–3 are the primary and secondary level functions of the HLW HMH system. These functions are further described in Table 2-1. System HMH provides passive functions of shielding and containment during both primary and secondary level functions described. Where appropriate to support definition of functional and design requirements, functions have been further decomposed and additional levels of supporting functions are also described. The requirement section number provides the location of the applicable functional analysis incorporated into system requirements.

Appendix B provides a further decomposition of system functions, including initiating, terminating, and integrating events and functions.

Figure 2–3: High-Level Waste Facility Melter Handling System Functional Block Diagram

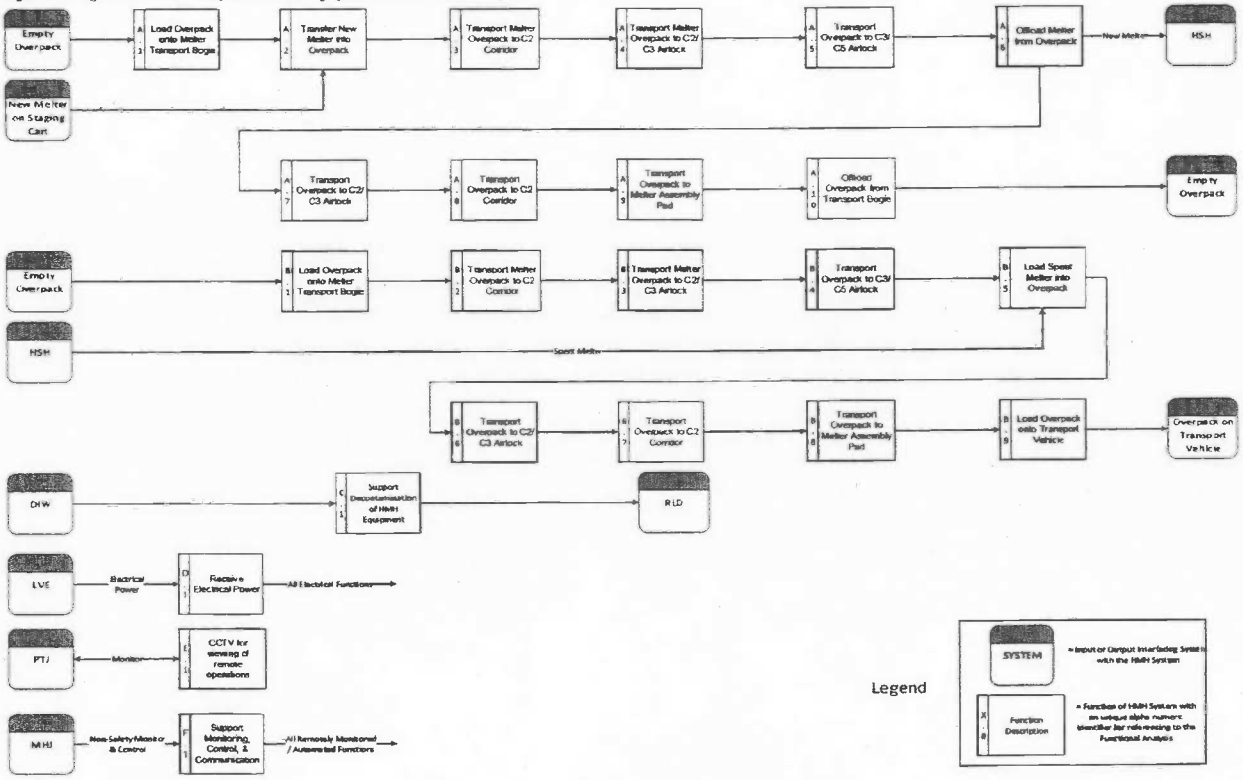

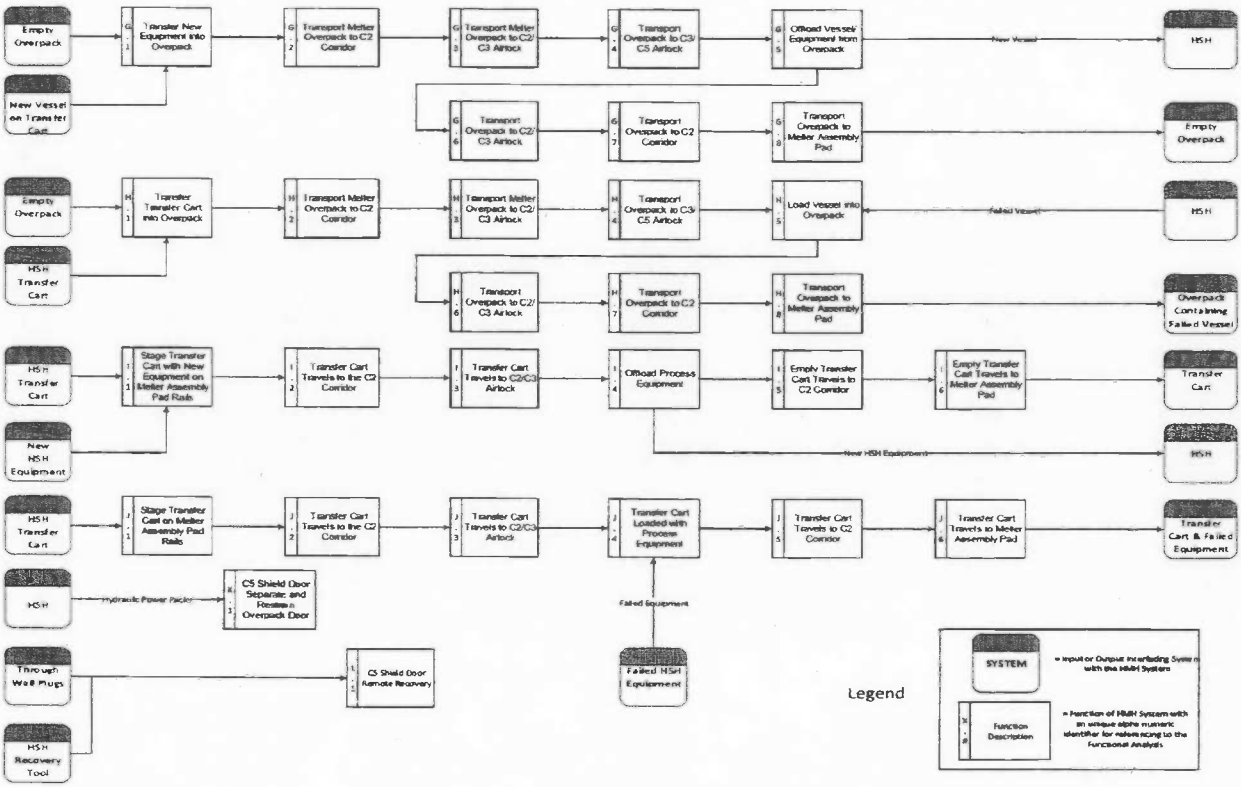
Empty Overpack
New Vessel on Transfer Cart
G.1 Transfer New Equipment into Overpack
G.2 Transport Melter Overpack to C2 Corridor
G.3 Transport Melter Overpack to C2/C3 Airlock
G.4 Transport Overpack to C3/C5 Airlock
G.5 Offload Vessel/Equipment from Overpack
New Vessel
HSH
G.6 Transport Overpack to C2/C3 Airlock
G.7 Transport Overpack to C2 Corridor
G.8 Transport Overpack to Melter Assembly Pad
Empty Overpack
Empty Overpack
HSH Transfer Cart
H.1 Transfer Transfer Cart into Overpack
H.2 Transport Melter Overpack to C2 Corridor
H.3 Transport Melter Overpack to C2/C3 Airlock
H.4 Transport Overpack to C3/C5 Airlock
H.5 Load Vessel into Overpack
Failed Vessel
HSH
H.6 Transport Overpack to C2/C3 Airlock
H.7 Transport Overpack to C2 Corridor
H.8 Transport Overpack to Melter Assembly Pad
Overpack Containing Failed Vessel
HSH Transfer Cart
New HSH Equipment
I.1 Stage Transfer Cart with New Equipment on Melter Assembly Pad Rails
I.2 Transfer Cart Travels to the C2 Corridor
I.3 Transfer Cart Travels to C2/C3 Airlock
I.4 Offload Process Equipment
I.5 Empty Transfer Cart Travels to C2 Corridor
I.6 Empty Transfer Cart Travels to Melter Assembly Pad
Transfer Cart
New HSH Equipment
HSH
HSH Transfer Cart
J.1 Stage Transfer Cart on Melter Assembly Pad Rails
J.2 Transfer Cart Travels to the C2 Corridor
J.3 Transfer Cart Travels to C2/C3 Airlock
J.4 Transfer Cart Loaded with Process Equipment
J.5 Transfer Cart Travels to C2 Corridor
J.6 Transfer Cart Travels to Melter Assembly Pad
Transfer Cart & Failed Equipment
HSH
Hydraulic Power Packs
K.1 C5 Shield Door Separate and Restrain Overpack Door
Failed Equipment
Failed HSH Equipment
Through Wall Plugs
HSH Recovery Tool
L.1 C5 Shield Door Remote Recovery
Legend
SYSTEM
= Input or Output Interfacing System with the HMH System
Function Description
= Function of HMH System with an unique alpha numeric identifier for referencing to the Functional Analysis

Table 2-1: Functional Analysis and Crosswalk to Requirements

Reference	Functional Analysis Description	Requirement Section No.
A.	**Transfer New Melter to Melter Cave**	N/A
A.1	Load overpack onto melter transport bogie – the melter will be assembled on the melter staging cart located on the melter assembly pad (MAP) staging cart rails.	3.4.1.1
A.2	Transfer new melter into empty overpack – the fully assembled melter is transferred to the empty overpack using the melter support base winch which.	3.6.1.2.1
A.3	Transport melter overpack to C2 corridor – the melter transport bogie moves the overpack from the MAP to the C2 corridor through the bay receipt rollup door.	3.6.1.2.1
A.4	Transport melter overpack to C2/C3 airlock – the melter transport bogie moves the overpack from the C2 corridor to the C2/C3 airlock through the C2 containment door.	3.6.1.2.1
A.5	Transport overpack to C3/C5 airlock – the melter transport bogie moves the overpack from the C2/C3 airlock to the C3/C5 airlock through the C2/C3 shield door.	3.6.1.2.1
A.6	HSH offloads melter from overpack – the melter cave support handling system removes the melter from the overpack and moves it into the melter cave.	3.4.3.1
A.7	Transport empty overpack to C2/C3 airlock – the melter transport bogie moves the overpack from the C3/C5 airlock to the C2/C3 airlock through the C2/C3 shield door.	3.6.1.2.1
A.8	Transport empty overpack to C2 corridor – the melter transport bogie moves the overpack from the C2/C3 airlock to the C2 corridor through the C2 containment door.	3.6.1.2.1
A.9	Transport empty overpack to melter assembly pad – the melter transport bogie moves the overpack from the C2 corridor to the MAP through the bay receipt rollup door.	3.6.1.2.1
A.10	Offload overpack from transport bogie – the melter lifting system lifts the overpack off of the transport bogie.	3.4.1.1

B.	**Transfer spent melter to Transport Vehicle**	N/A
B.1	Load empty melter overpack onto melter transport bogie – melter lifting system lowers the overpack onto the melter transport bogie that is located on the MAP.	3.4.1.1
B.2	Transport empty melter overpack to C2 corridor – the melter transport bogie moves the overpack from the MAP to the C2 corridor through the bay receipt rollup door.	3.6.1.2.1
B.3	Transport empty melter overpack to C2/C3 airlock– the melter transport bogie moves the overpack from the C2 corridor to the C2/C3 airlock through the C2 containment door.	3.6.1.2.1
B.4	Transport empty melter overpack to C3/C5 airlock– the melter transport bogie moves the overpack from the C2/C3 airlock to the C3/C5 airlock through the C2/C3 shield door.	3.6.1.2.1
B.5	HSH loads spent melter into overpack – the melter cave support handling system loads the spent/failed melter into the empty overpack.	3.4.3.1
B.6	Transport melter overpack with spent melter to C2/C3 airlock– the melter transport bogie moves the overpack from the C3/C5 airlock to the C2/C3 airlock through the C2/C3 shield door.	3.6.1.2.1
B.7	Transport melter overpack with spent melter to C2 corridor– the melter transport bogie moves the overpack from the C2/C3 airlock to the C2 corridor through the C2 containment door.	3.6.1.2.1
B.8	Transport melter overpack with spent melter to melter assembly pad– the melter transport bogie moves the overpack with spent melter from the C2 corridor to the MAP through the bay receipt rollup door.	3.6.1.2.1
B.9	Load melter overpack with spent melter onto transport vehicle– the melter transport bogie moves the overpack on to the transport vehicle.	3.4.1.1
C.	**Support Decontamination of Equipment**	N/A
C.1	Airlocks and HMH equipment are washed down to clean contaminant – the demineralized water system (DIW) is used in conjunction with an HMH provided spray lance to decontaminate HMH equipment.	3.4.4.4 3.4.4.4.1
D.	**Electrical Power**	N/A
D.1	Receive Electrical Power – the low voltage electrical system (LVE) provides electrical power to the HMH equipment and instruments	3.4.3.2
E.	**Remote Operations Monitoring**	N/A
E.1	Facilitate Remote Viewing of Remote Operations – The PTJ system facilitates remote viewing of remote operations via CCTV	3.4.4.5
F.	**Mechanical Handling Monitoring, Control, and Communication**	N/A
F.1	Monitoring, Control, and Communication - The MHJ provides monitoring, control, and communication to HMH equipment and instrumentation	3.8.2.1
F.1.1	Interlock for transferring melter overpack through C2 corridor – The MHJ provides an interlock, based on position switches, to ensure that only one of the receipt bay roll-up door and C2 corridor is open at the same time.	3.8.2.2.1
F.1.2	Interlock for transferring melter overpack through C2/C3 airlock – The MHJ provides an interlock, based on position switches, to ensure that only one of the C2 containment door and C2/C3 shield door is open at the same time.	3.8.2.2.1
F.1.3	Interlock for transferring melter overpack through C3/C5 airlock – The MHJ provides an interlock, based on position switches, to ensure that only one of the C2/C3 shield door and the C5 shield door is open at the same time.	3.8.2.2.1

F.1.4	Interlock for physical lock on the C2/C3 shield door – The MHJ provides an interlock, based on position switches, to ensure that C2/C3 is fully closed before engaging a physical lock.	3.8.2.2.2
F.1.5	Interlock for engaging upper locking cylinders – The MHJ provides an interlock, based on position switches, to ensure that both the C2/C3 and C5 shield doors are closed before engaging the upper locking cylinders.	3.8.2.2.2
F.1.6	Interlock for engaging lower locking cylinders- the MHJ provides an interlock to ensure the upper locking cylinders are engaged before engaging the lower lifting cylinders.	3.8.2.2.2
F.1.7	Interlock for retracting lower lifting cylinders – The MHJ provides an interlock to ensure the C5 shield door is closed and the upper locking cylinders are extended before retracting the lower lifting cylinders.	3.8.2.2.2
F.1.8	Interlock for extending lower lifting cylinders – The MHJ provides an interlock to ensure the C5 shield door is positioned correctly and the upper locking cylinders are extended before extending the lower lifting cylinders.	3.8.2.2.2
F.1.9	Interlock for opening C5 shield door – The MHJ provides an interlock to ensure the upper locking cylinders are extended before opening the C5 shield door.	3.8.2.2.2
F.1.10	Interlock for closing C5 shield door – The MHJ provides an interlock to ensure the lower lifting cylinders are retracted before closing the C5 shield door.	3.8.2.2.2
F.1.11	Interlock for retracting the lower lifting cylinders – The MHJ provides an interlock to ensure the upper locking cylinders are extended before the lower lifting cylinders can be retracted.	3.8.2.2.2
F.1.12	Interlock for retracting upper locking cylinders – The MHJ provides an interlock to ensure the C5 shield door is closed before retracting the upper locking cylinders.	3.8.2.2.2
F.1.13	Interlock for allowing C5 shield door travel – The MHJ provides an interlock to ensure the melter overpack door is positioned within the C5 shield door before allowing C5 shield door travel.	3.8.2.2.2
F.1.14	Monitoring of Melter Transport Bogie Position – The MHJ provides monitoring of the melter transport bogie location while at the C5 shield door interface to ensure the melter overpack closure shield door is aligned to be removed by the C5 shield door.	3.8.1.1
G.	**Import of New Vessels/Large Equipment**	N/A
G.1	Staging melter overpack with new vessel on transfer cart – the vessel transfer cart (HSH-TRLY-00003) with a new vessel or large process equipment is placed inside the melter overpack on the MAP.	3.4.1.1
G.2	Transfer overpack to C2 corridor – the melter transport bogie moves the overpack from the MAP to the C2 corridor through the bay receipt rollup door.	3.6.1.2.1
G.3	Transport overpack to C2/C3 airlock – the melter transport bogie moves the overpack from the C2 corridor to the C2/C3 airlock through the C2 containment door.	3.6.1.2.1
G.4	Transport overpack to C3/C5 airlock – the melter transport bogie moves the overpack from the C2/C3 airlock to the C3/C5 airlock through the C2/C3 shield door.	3.6.1.2.1
G.5	HSH offloads vessel from overpack – the melter cave support handling system removes the vessel or large process equipment from the overpack and moves it into the melter cave.	3.4.3.1
G.6	Transport overpack to C2/C3 airlock – the melter transport bogie moves the overpack with vessel transfer cart from the C3/C5 airlock to the C2/C3 airlock through the C2/C3 shield door.	3.6.1.2.1

G.7	Transport overpack to C2 corridor – the melter transport bogie moves the overpack from the C2/C3 airlock to the C2 corridor through the C2 containment door.	3.6.1.2.1
G.8	Transport empty overpack to melter assembly pad – the melter transport bogie moves the overpack from the C2 corridor to the MAP through the bay receipt rollup door.	3.6.1.2.1
H.	**Export of Spent Vessels/Large Equipment**	N/A
H.1	Stage overpack with empty vessel transfer cart – the empty vessel transfer cart is placed in an empty melter overpack on the melter assembly pad.	3.4.3.1
H.2	Transport melter overpack to C2 corridor – the melter transport bogie moves the overpack with empty vessel transfer cart from the MAP to the C2 corridor through the bay receipt rollup door.	3.6.1.2.1
H.3	Transport melter overpack to C2/C3 airlock– the melter transport bogie moves the overpack with empty transfer cart from the C2 corridor to the C2/C3 airlock through the C2 containment door.	3.6.1.2.1
H.4	Transport melter overpack to C3/C5 airlock– the melter transport bogie moves the overpack with empty vessel transfer cart from the C2/C3 airlock to the C3/C5 airlock through the C2/C3 shield door.	3.6.1.2.1
H.5	HSH loads spent vessel onto vessel transfer cart – the melter cave support handling system loads the spent/failed vessel or large process equipment onto the vessel transfer cart.	3.4.3.1
H.6	Transport overpack with spent vessel/equipment to C2/C3 airlock– the melter transport bogie moves the overpack from the C3/C5 airlock to the C2/C3 airlock through the C2/C3 shield door.	3.6.1.2.1
H.7	Transport melter overpack with spent vessel/equipment to C2 corridor– the melter transport bogie moves the overpack from the C2/C3 airlock to the C2 corridor through the C2 containment door.	3.6.1.2.1
H.8	Transport melter overpack with spent vessel/equipment to melter assembly pad– the melter transport bogie moves the overpack from the C2 corridor to the MAP through the bay receipt rollup door.	3.6.1.2.1
I.	**Import of Process Equipment**	N/A
I.1	Stage vessel transfer cart on melter assembly pad – the vessel transfer car is placed directly on the MAP rails loaded with new process equipment.	3.4.3.1
I.2	Transfer the transfer cart to C2 corridor – the transfer cart travels along the MAP rails to the C2 corridor from the MAP through the receipt bay rollup door.	3.6.1.2.1
I.3	Transfer the transfer cart to the C2/C3 airlock – the transfer cart travels along the airlock rails through the C2 containment door to the C2/C3 airlock maintenance area.	3.6.1.2.1
I.4	HSH offloads process equipment – the melter cave support handling system removes the process equipment from the transfer cart.	3.4.3.1
I.5	Transfer the transfer cart to the C2 corridor – the transfer travels along the airlock rails through the C2 containment door to the C2 corridor.	3.6.1.2.1
I.6	Transfer the transfer cart to the melter assembly pad – the transfer cart travels along the MAP rails to the MAP through the receipt bay rollup doors.	3.6.1.2.1
J.	**Export of Process Equipment**	N/A
J.1	Stage empty vessel transfer cart on melter assembly pad – the empty vessel transfer cart is placed directly on the MAP rails.	3.4.3.1
J.2	Transfer empty transfer cart to C2 corridor – the transfer cart travels along the MAP rails to the C2 corridor through the receipt bay rollup door.	3.6.1.2.1
J.3	Transfer empty transfer cart to the C2/C3 airlock – the transfer cart travels along the airlock rails to the C2/C3 airlock maintenance area.	3.6.1.2.1

J.4	HSH loads transfer cart with process equipment – the melter cave support handling system loads the process equipment on to the transfer cart.	3.4.3.1
J.5	Transfer loaded transfer cart to C2 corridor – the transfer cart travels along the airlock rails to the C2 corridor through the C2 containment door.	3.6.1.2.1
J.6	Transfer loaded transfer cart to the melter assembly pad – the transfer travels along the airlock rails to the MAP through the receipt bay rollup doors.	3.6.1.2.1
K.	**Melter Overpack Closure Shield Door Removal**	N/A
K.1	Melter overpack closure shield door removal – The HSH system provides hydraulic power packs (HSH-MHAN-00015 and HSH-MHAN-00067) that allow the C5 shield door to receive, lift, and restrain the melter overpack closure shield door in order to remotely separate the overpack shield door from the overpack.	3.4.3.1 3.7.3.1
L.	**Maintenance and Recovery Operations**	N/A
L.1	Utilize HMH equipment to Perform Maintenance and Recovery Operations	3.5.4.1 3.6.1.2.2
L.1.1	C5 shield door includes recovery system to recover maintenance shield doors to the closed position for maintenance.	3.5.4.1

2.2 System Classification

The HLW HMH system contains components with the following classifications/designations:

- ☒ Safety Class
- ☒ Safety Significant
- ☐ Dangerous Waste Permit affecting
- ☐ Air Permit affecting
- ☐ Waste Acceptance Impacting
- ☒ General

2.3 Basic Operational Overview

A functional description of the system is provided in Sections 2 and 2.1, which provide the context diagram for the system, interfaces with other systems, a simplified system diagram, a functional block diagram, and descriptions of system functions. A basic operational system overview is described in this section. Detailed operational information is provided in Section 4.

The high-level waste (HLW) melter handling (HMH) system is located in the HLW facility of the Hanford Tank Waste Treatment and Immobilization Plant (WTP). The HMH system transports new, spent, and failed melters into and out of the HLW melter caves, as well as other large process vessels and equipment. The melter transport bogie, shielded overpack, and dedicated rails are used to move a new or spent / failed melter from the MAP to a melter cave interface point and back. Melters require travel through the C2/C3 and C3/C5 airlocks and their associated confinement and shield doors on their way through the HLW facility. Shield and confinement doors are provided with physical locks to prevent consecutive doors from being open at the same time to help with confinement. Spent / failed melters will remain in the shielded overpack in an interim storage area until it has been verified as meeting the requirements for final disposal, allowing the DOE- designated contractor to transfer the spent / failed melter and overpack to the final disposal area.

3 Design Requirements

3.1 Requirements

Requirements are documented in Sections 3.1 through Section 3.9. Each requirement statement is accompanied by a basis discussion (as needed) and the expected means of verification. Requirements must be met in design. If a requirement stated in this document cannot be met in design, a revision to the requirement needs to be pursued, if possible, or the design must be changed to meet the requirement.

Requirements preceded by "**[HOLD]**" may only be used in support of preliminary or committed design, which shall also be issued with appropriate holds per procedure 24590-WTP-3DP-G04B-00046, *Engineering Drawings*. These requirements may not be used in support of fabrication or construction.

The following abbreviations are used to designate the selected method for verification (see 24590-WTP-GPG-ENG-0161, *Technical Requirements Management*, for additional guidance concerning methods of verification):

(I) Inspection
(A) Analysis
(D) Demonstration
(T) Test

The following abbreviations are used to designate the organization responsible for performing the verification:

(ENG) Engineering
(CON) Construction
(SU) Startup
(COM) Commissioning
(SUP) Supplier
(SUB) Subcontractor
(SQR) Supplier Quality Representative
(REC) Receiving

3.2 Bases

Basis discussions are provided as needed to explain the decomposition or interpretation from the originating source requirement(s). Where a **[HOLD]** has been applied to a requirement, this section will include the basis for the "HOLD." Where included, basis discussions provide supplementary information to help the reader understand the origin or intent of a requirement. Basis statements do not include requirements and are not to be considered as requirements.

3.3 References

The requirements include a source document reference and a requirement object identification number (ROIN) included in brackets following the requirement statement. Each unique source document reference, with respective ROIN number(s), is bracketed separately. Requirements may include a reference to the Table 2-1functional description listed in parentheses following the source document and ROIN number references. A complete listing of all source references is provided in Section 5.1.

3.4 General Requirements

3.4.1 Mission and Functional / Performance Requirements (Incl. States/Modes)

3.4.1.1 Unloading and Loading Melters

Requirement: The HMH melter lift system shall be designed to (a) allow a melter transport bogie carrying an overpack to be driven onto the Tank Operations Contractor transport vehicle, (b) lift a melter overpack, empty or loaded with a new or spent melter, off the transport bogie positioned on the Tank Operations Contractor transport vehicle, (c) allow the melter transport bogie to be driven off the transport vehicle and onto the melter assembly pad, and (d) set the loaded overpack onto the Tank Operations Contractor transport vehicle. [Section 1.2, Table 1, ICD 03, ROIN: 2-39774]. (A.1 – A.10) (B.1 – B.9)

Basis discussion: Design and fabrication of the melter overpack is not included in the current contract scope.

Verification: Verification is expected to be achieved through the following:

Verif. Method	Verif. By	Plan	Notes/Comments
A	ENG	Perform analysis to determine weight of overpack and spent / failed melter.	
I	ENG	Review design to ensure lift capacity and equipment configuration facilitate the transfer of empty and loaded overpacks between the Tank Operations Contractor transport vehicle and the melter transport bogie.	
D	SU/COM	Demonstrate the ability to transfer empty and loaded overpacks between the Tank Operations Contractor transport vehicle and the melter transport bogie using the melter lift system.	An overpack may not be available for Startup or Commissioning to complete verification.

3.4.1.2 Design Life

3.4.1.2.1 Service (Operating) Life

Requirement: Permanent HMH plant equipment shall be designed for a minimum design life of 40 years, inclusive of maintenance. All non-maintainable items of HMH equipment shall be designed to last the life of the facility. Replaceable components shall be designed to last a minimum of five years. [C.7(a)(1), DOE/BNI Contract, ROIN: 1-25930][Sections 11.1.1, 11.7.4, 11.8.3, BOD, ROIN: 1-41120, ROIN: 1-41121B, 1-41210, ROIN: 1-41214][Sections 2, 14.1, Appendix A, ORD, ROIN: 1-39819, ROIN: 8-3584, ROIN: 2-49671].

Basis discussion: Equipment and material selection is based on proven performance, value engineering principles, and fit-for-function principles. The selection of equipment and materials is further addressed in detail as the design progresses. Essentially, all non-maintainable equipment located within cells where routine access is not possible is selected to have a design life commensurate with that of the facility. The minimum five year design life for replaceable components is to coincide with the anticipated melter replacement schedule/facility outages.

Verification: Verification is expected to be achieved through the following:

Verif. Method	Verif. By	Plan	Notes/Comments
I	ENG	Review supplier design documentation (analysis, testing or demonstrated performance history) for certificate of conformance versus design life requirement established in the material requisition.	

3.4.1.2.2 Room Environment Conditions for Safety SSCs

Requirement: The HMH system safety SSCs shall be designed to operate and withstand their most severe environmental conditions for their location(s) identified in HLW Room Environment Data sheet throughout their installed life, including the aging effects of their normal and abnormal service conditions and the room environment design basis event conditions for HLW melter caves (H-0117 and H-0106), C2 corridor (HC0104), C2/C3 airlock (H-0116A and H-0105A), and C3/C5 airlock (H-0116B and H-0105B). [Safety Criterion 4.4-1, SRD, ROIN: 1-38690].

- *HLW Room Environment Data Sheet*, 24590-HLW-U0D-W16T-00001, (for DBE conditions)

Basis discussion: Safety SSCs designated as Safety Class (SC) and Safety Significant (SS) are designed and qualified to perform their safety function as intended in the environments associated with the events for which they are intended to respond. The effects of aging on normal and abnormal functioning are considered in design and qualification.
[ALARA]

Verification: Verification is expected to be achieved through the following:

Verif. Method	Verif. By	Plan	Notes/Comments
A/T	ENG/SUP	Verification of compliance with EEQ requirements to be determined by testing or analysis.	
I	ENG	Review design of safety SSCs to verify conformance to the as-tested/analyzed configuration.	May be accomplished by EQP or separate evaluation/assessment and supplier certificates of conformance.

3.4.1.2.3 Room Environment Conditions for Non-safety Structures, Systems, or Components

Requirement: Non-safety equipment/components shall be designed to operate and withstand the service conditions per Table 12-1 in the BOD. [Table 12-1, BOD, ROIN: 2-39190][Sections 11.16, 16.1, ORD, ROIN: 14-1248E, ROIN: 8-7000].

Basis discussion: Non-safety SSCs are designed to function as intended in the room environment conditions associated with their location.
[ALARA]

Verification: Verification is expected to be achieved through the following:

Verif. Method	Verif. By	Plan	Notes/Comments
I	ENG	Review of design of non-safety SSCs to ensure compliance with BOD Table 12-1 conditions.	Document in an evaluation/assessment report.

3.4.1.2.4 Seismic Design

Requirement: Elements of the HMH system shall be designed for seismic conditions in accordance with Table 3-1. [Safety Criterion 4.1-3, SRD, ROIN: 1-38653] [Sections 4.3.1, 4.3.1.2, 4.3.9, 4.3.9.2, 4.3.9.3, 4.4.1.2, 4.4.1.4, 4.4.13, PDSA - HLW Facility, ROIN: 1-21507, ROIN: 1-21509, ROIN: 40-11534, ROIN: 2-41302, ROIN: 40-2716, ROIN: 40-2719, ROIN: 40-2718, ROIN: 40-2721, ROIN: 40-2717, ROIN: 14-7010, ROIN: 40-2720, ROIN: 2-41346, ROIN: 43-1786].

Table 3-1: HMH Seismic Design Categories

Description	Seismic Category	Reference
C2 containment door (HMH-DOOR-00008, HMH-DOOR-00013)	SC-I	Sections 4.3.9, 4.3.9.2 PDSA – HLW Facility, ROIN: 2-41302, ROIN: 40-2716, ROIN: 40-2719
*Through wall recovery plugs (30-PLUG-00072, 30-PLUG-00073)	SC-I	Section 4.3.1, 4.3.1.2, PDSA – HLW Facility, ROIN: 1-21507, 1-21509
C5shield door (HMH-DOOR-00010, HMH-DOOR-00015)	SC-II	Section 4.4.1.2 PDSA- HLW Facility, ROIN: 40-2718, ROIN: 40-2721
C2/C3 shield door (HMH-DOOR-00009, HMH-DOOR-00014)	SC-II	Section 4.4.1.2 PDSA – HLW Facility, ROIN: 40-2717, ROIN: 40-2720
Melter overpack (HMH-MHAN-00012, HMH-MHAN-00023)	SC-III	Section 4.4.13 PDSA – HLW Facility, ROIN 2-41346, ROIN: 43-1786
Melter transport bogie (HMH-MHAN-00047), melter assembly pad rails (HMH-RAIL-00008, 00009), melter airlock rails (HMH-RAIL-00003, 00006)	SC-III	Section 4.4.13 PDSA – HLW Facility, ROIN 2-41346, ROIN: 43-1786
Melter transport bogie rail stops	SC-III	Section 4.4.13 PDSA – HLW Facility, ROIN 2-41346, ROIN: 43-1786

* For items in penetrations through the C5V boundary, the attribute(s) of the component necessary to keep the item in the penetration and to ensure the body of the item does not fail are SC-I (Section 4.3.1.2, PDSA – HLW Facility).

Basis discussion: Section 2.4.12 of 24590-WTP-PSAR-ESH-01-002-01, *Preliminary Documented Safety Analysis to Support Construction Authorization; General Information* (PDSA – General) states the following: "All components and parts of the equipment that provide or contribute to the safety functions and accident monitoring functions, including equipment supports and anchorage, shall be qualified accordingly." This qualification ensures SSCs meet the designated seismic design requirements. The 24590-WTP-SRD-ESH-01-001-02, *Safety Requirements Document Volume II* (SRD), Safety Criterion 4.1-3 details the equivalence of the WTP seismic category to the seismic performance category of DOE-STD-1020-94, *Natural Phenomena Hazards Design and Evaluation Criteria for Department of Energy Facilities*. The SRD also states that SSCs designated as safety SSCs be designed to withstand the effects of natural phenomena hazard events (e.g., earthquakes, wind, and floods) without loss of capability to perform specified safety functions.

Verification: Verification is expected to be achieved through the following:

Verif. Method	Verif. By	Plan	Notes/Comments
A/T	ENG/ SUP	Analysis or testing performed on safety SSCs to demonstrate capability to withstand seismic event. The EQPs will be prepared for all safety components. Refer to the latest revision of 24590-WTP-PD-ENG-0001, *Equipment Qualification Program Description*, for additional information, including independent peer review of seismic evaluation of the applicable SSCs (WTP and supplier-supplied) in accordance with requirements of DOE-STD-1020-94, *Natural Phenomena Hazards Design and Evaluation Criteria for Department of Energy Facilities*.	This is expected to be documented in the EQPs.
I	ENG	Verify that the safety function, as established in the PDSA/DSA is correctly reflected in the Equipment Qualification Datasheet (EQD) and supporting documentation in the EQP.	EQP is issued and verified to align with the PDSA/DSA. Review is expected to be joint effort between design agency and EQ group

3.4.1.2.5 Seismic Interaction

Requirement: All permanently mounted HMH equipment not specified in Table 3-1 shall, at minimum, be designated Seismic Category-IV. Interaction effects shall be considered when determining the seismic category of individual items and, where an adverse seismic interaction with SC or SS equipment exists, adequate measures shall be taken to preclude the adverse interaction. [Criterion 4.1-3, SRD, ROIN: 1-38653] [Section 10.2.15, BOD, ROINs: 45-21847, 21848].

Basis discussion: In accordance with [GPG-ENG-033], equipment that is non-safety may be identified as having a potential for adverse interaction with safety equipment during a seismic event. Where a resolution strategy is selected to increase the seismic category of the source SSC to protect the safety (target) SSC, the resulting seismic category of the equipment may be greater than SC-IV. In those cases, the equipment design must be verified to meet the higher seismic performance category such that the target SSC is protected.

Verification: Verification is expected to be achieved through:

Verif. Method	Verif. By	Plan	Notes/Comments
I	ENG	Evaluate the HMH system for seismic interaction effects per 24590-WTP-GPG-ENG-033 and devise a control strategy for all open interactions.	Document in a Seismic Interaction List.
A/T	ENG/ SUP	Analysis or testing performed on SSCs to demonstrate the ability to withstand the seismic loadings for their respective seismic categories to the extent necessary to prevent interactions.	Documented in an Equipment Seismic Qualification (ESQ) Review Form or supplier seismic design report.
I	ENG	Review design to verify conformance to the as-tested/as-analyzed configuration.	

3.4.2 Nuclear Safety, ALARA, Environmental and Other Regulatory Requirements

3.4.2.1 Safety Designations

Requirement: [**HOLD**] The following SSCs shall be designated as safety SSCs. [Safety Criterion 4.1-1, 4.1-2, 4.1-3, SRD, ROIN: 1-38690, ROIN: 1-38650, ROIN: 1-38653] [Sections 4.3.9, 4.3.9.2, 4.4.1.2, PDSA – HLW Facility, ROIN: 2-41302, ROIN: 40-2716, ROIN: 40-2719, ROIN: 40-2717, ROIN: 40-2718, ROIN: 40-2720, ROIN: 40-2721, ROIN: 2-41346].

Table 3-2: HMH System Safety Designations

Equipment/ Component Description	Safety Function	Safety Classification	References
C2 containment door (HMH-DOOR-00008, HMH-DOOR-00013)	Mitigate the consequences of an airborne release to the public and co-located workers by maintaining the C5V boundary. Mitigate the consequences of a fire by preventing fire propagation and protecting redundant safety SSCs	SC SC	Section 4.3.9.2, PDSA – HLW Facility Section 4.3.4 PDSA – HLW Facility
C5 shield door (HMH-DOOR-00010, HMH-DOOR-00015)	Prevents or mitigates the exposure to direct radiation. Mitigates consequences of an airborne release of radioactive material by providing an engineered air gap to maintain cascade airflow.	SS	Section 4.4.1, PDSA – HLW Facility
C2/C3 shield door (HMH-DOOR-00009, HMH-DOOR-00014)	Prevents or mitigates the exposure to direct radiation. Mitigates consequences of an airborne release of radioactive material by providing an engineered air gap to maintain cascade airflow.	SS	Section 4.4.1, PDSA – HLW Facility
Melter overpack (HMH-MHAN-00012, HMH-MHAN-00023)	Mitigate the consequences of an exposure to the facility worker by providing shielding and confinement.	SS	Section 4.4.13, PDSA – HLW Facility

Equipment/ Component Description	Safety Function	Safety Classification	References
Melter load path components: - Melter transport bogie (HMH-MHAN-00047) - Melter Rails - Melter assembly pad -Rail Stops	Reduces the frequency of an accident by providing load-bearing support and mechanical rail stops for the melter bogie when handling a melter overpack.	SS	Section 4.4.13, PDSA – HLW Facility
Through Wall Recovery Plugs (30-PLUG-00072, 30-PLUG-00073)	Mitigate the consequences of an airborne release to the public and co-located workers by maintaining the C5V boundary.	SC*	HLW PDSA Section 4.3.1, 4.3.1.2
	Prevents or mitigates the exposure to direct radiation.	SS	HLW PDSA Section 4.4.1.3
	Mitigate the consequences of a fire by preventing fire propagation and protecting redundant safety SSCs	SC	HLW PDSA Section 4.3.4

* For items that are part of the C5V boundary or that penetrate the C5V boundary, the attribute(s) of the component necessary to keep the item in the penetration and to ensure the body of the item does not fail are SC (Section 4.3.1.2, PDSA – HLW Facility).
[ALARA]

Basis Discussion: To ensure safety SSCs meet the design functions, Safety Criterion 4.4-1 of the SRD states: "Safety structures, systems, and components designated as Safety Class and Safety Significant shall be designed and qualified to function as intended in the environments associated with the events for which they are intended to respond." The requirement is on "HOLD" because the SDS may add a requirement for the melter overpack to maintain confinement and shielding after a drop event [24590-WTP-ATS-MGT-14-0587].

Verification: Verification is expected to be achieved through the following:

Verif. Method	Verif. By	Plan	Notes/Comments
I	ENG	Verify that the safety classification(s) and function(s), as established in the PDSA/DSA are correctly reflected in the Equipment Qualification Datasheet (EQD) and supporting documentation in the EQP.	EQP is issued and verified to align with the PDSA/DSA. Review is expected to be joint effort between design agency and EQ group.

3.4.3 System Interface Requirements

3.4.3.1 HSH System Interface Requirements

Requirement: The following table complies the HSH interface requirements with HMH. (A.6) (B.5) (G.5) (H.5) (I.4) (J.4) (K.1)

Table 3-3: HMH System Interfaces with HSH

Nature of Interface
The overpack winch system shall provide a hook that is aligned and compatible with, the associated pulling point on the melter assembly, and is capable of being connected/disconnected to/from the melter assembly by an HSH melter cave crane.
The melter overpack winch shall be capable of being unspooled by an HSH melter cave crane grasping the hook. The overpack winch shall provide sufficient pulling capacity and cable length to pull a failed melter from its installed position, inside a melter cave, into an overpack staged at the C5 door aperture. The overpack winch shall provide a braking force to regulate melter acceleration while the melter is pulled from the overpack into the melter cave.
HSH Supplies pressurized hydraulic fluid to the C5 shield door hydraulic cylinders to facilitate removing and reinstalling the melter overpack closure door.
The overpack shall include rails of appropriate size, capacity, positioning to accommodate an assembled melter, and allow transfer of an assembled melter to/from the melter caves.

Basis Discussion: The major interfacing system with HMH is the HSH system. HSH provides mechanical handling equipment used to remotely remove melters and vessels from the melter overpack and provides mechanical handling equipment to remotely connect the overpack winch to a failed melter or vessel positioned inside the melter cave to facilitate export into the overpack.

Verification: Verification is expected to be achieved through:

Verif. Method	Verif. By	Plan	Notes/Comments
A	ENG	Verify design by analysis to show the overpack rails will accommodate an assembled melter.	
I	ENG	Review of supplier design for all interface requirements in Table 3-3.	
D	SU/COM	Demonstrate the interface capability to extract from the overpack or insert melter into overpack using a combination of HSH in-cave equipment and the melter overpack internal components.	An overpack may not be available for Startup or Commissioning to complete verification.

3.4.3.2 Other System Interface Requirements

Requirements associated with specific system interfaces are discussed in the subsequent requirement sections titled "System Interface Requirements." The HMH system interfaces are listed in Table 3-4 below: (D.1)

Table 3-4: HMH System Interfaces

System Locator	System Name	Nature of Interface
DIW	Demineralized Water System	Supplies demineralized water for decontamination and decommissioning washdowns of HMH equipment, C2/C3 airlock, and C3/C5 airlock.
HMP	HLW Melter Process System	The melter overpack is sized to accommodate a melter assembly.
LVE	Low Voltage Electrical System	Supplies electrical power to the HMH equipment and instruments.
MHJ	Mechanical Handling Control System	Provides mechanical handling equipment operational control signals.
PTJ	Process and Mechanical Handling CCTV System	Provides cameras or closed caption televisions for viewing of remote operations.
RLD	Radioactive Liquid Waste Disposal System	Disposal point for washdown water collected in HMH-SUMP-0001, 00002, 00003, and 00004.

3.4.4 Other Technical, Specialty, Operations and Maintenance Requirements

3.4.4.1 Startup and Commissioning

Requirement: The system design shall accommodate provisions as necessary to support startup and commissioning testing as identified in Appendix A. [Section 11.4.7, BOD, ROIN: 8-6066].

Basis discussion: Additional provisions that are needed to support identified testing are to be accommodated in the design, as jointly determined by Design Agency, Startup and Commissioning during the design development and review process, with consideration given to the tests and demonstration activities required for requirement verification specified in Appendix A. This may include, but is not limited to, provisions to support the introduction or removal of fluids, gases, reagents or simulants; or the availability of special test ports, sampling ports, or temporary instruments or instrument lines.

Verification: Verification is expected to be achieved through:

Verif. Method	Verif. By	Plan	Notes/Comments
I	ENG	Review design to verify requirement is met based on established tests/demonstrations to be performed during startup and commissioning.	Document in an evaluation/assessment report. Startup and commissioning to participate in the evaluation/assessment.

3.4.4.2 Emergency Stop Buttons

Requirement: Where operators will be co-located with operating machinery and physical injury is determined to be credible, dedicated emergency-stop (E-Stop) buttons will be provided near the

machinery. [Section 11.12.5.3, ORD, ROIN: 1-40021, ROIN: 8-8287] [Sections 7.2.1.5, 7.2.1.6, 7.3.9.1, BOD, ROIN: 8-9083, ROIN: 1-40634A, ROIN: 1-40683, ROIN: 1-40684, ROIN: 40-23262].

Basis discussion: E-Stops will provide local indication only of the status when not connected to the MHJ.

Verification: Verification is expected to be achieved through:

Verif. Method	Verif. By	Plan	Notes/Comments
A	ENG	Perform an evaluation of system equipment to determine which equipment provides a credible injury hazard.	
I	ENG	Review of design for incorporation of emergency stops on equipment deemed to have a credible injury hazard.	Document in an evaluation/assessment report. Operations to participate in or review evaluation/assessment.
D	SU/COM	Demonstrate the capability to stop equipment using the equipment's dedicated emergency stop.	

3.4.4.3 Emergency Stop Reporting

Requirement: Equipment E-stops shall provide a status signal and remain in a shut-down state until the circuit is physically reset. E-stops on equipment connected to the MHJ provide a status signal to the MHJ. E-stops on equipment with no MHJ connection provide a status signal for a local indicator. [Section 7.3.9.1, BOD, ROIN: 1-40684].

Basis discussion: None.

Verification: Verification is expected to be achieved through:

Verif. Method	Verif. By	Plan	Notes/Comments
I	ENG	Review design to verify E-stops provide the appropriate status signal, based on parent equipment MHJ connectivity, and remain in a shutdown state until the circuit is physically reset.	
D	SU/COM	Demonstrate emergency stop reporting and reset functions.	

3.4.4.4 Decontamination

Requirement: System HMH shall provide means to decontaminate equipment with pressurized warm water, detergent solution, or steam in both the C2/C3 and C3/C5 airlock. [Section 11.8.3.1, BOD, ROIN: 1-41215]. (C.1)

Basis discussion: This functionality may be performed or supported by mobile equipment shared across multiple systems.

[ALARA]

Verification: Verification is expected to be achieved through:

Verif. Method	Verif. By	Plan	Notes/Comments
I	ENG	Review design to verify HMH equipment, facility equipment, or a combination thereof, is provided to perform equipment decontamination in the C2/C3 and C3/C5 airlocks, and that the necessary support utilities are available.	Document in an evaluation/assessment report

3.4.4.4.1 Equipment Decontamination

Requirement: The HMH equipment located in both the C2/C3 and C3/C5 airlocks shall be designed to withstand decontamination without any reduction of functionality through degradation of the electrical, mechanical, or any other components involved. [Section 9.1, 14.16, 20, ORD, ROIN: 8-8065, ROIN: 8-475, ROIN: 9-56]. (C.1)

Basis discussion: The HMH equipment located in the C2/C3 and C3/C5 airlocks will be able to withstand decontamination without reduction of functionality.
[ALARA]

Verification: Verification is expected to be achieved through:

Verif. Method	Verif. By	Plan	Notes/Comments
I	ENG	Review of design to ensure that equipment located in both C2/C3 and C3/C5 airlocks can withstand the process without any reduction of functionality through degradation.	Document in an evaluation/assessment Ops to participate in or review evaluation/assessment

3.4.4.5 Viewing Operations

Requirement: Cameras and/or shield windows shall be provided for viewing capabilities to assist in remote HMH mechanical handling operations. . [Sections 7.2.1.5, 9.3, BOD, ROIN: 8-9084, ROIN: 1-40904] [Sections 11.5, 12.4, ORD, ROIN: 8-9102, ROIN: 1-40045, ROIN: 8-14261]. (E.1)

Basis Discussion:
Cameras for viewing operations should be placed to give optimum viewing angles and distance to suit the operations. CCTV monitoring will be included in the control room and at the cave face when the operations are not visible from the cave face. See requirement 3.8.1.2 for controls requirements for the mechanical handling operations.

The cameras and/or shield windows provide viewing of remote operations as noted in Sections 3.4.3.1, 3.5.4.1, 3.6.1.2.1. As such, adequate viewing may be demonstrated as part of the verification by demonstration for remote operation of the HMH equipment.
[ALARA]

Verification: Verification is expected to be achieved through the following:

Verif. Method	Verif. By	Plan	Notes/Comments
I	ENG	Review design to confirm that the remote cameras and shield windows provide viewing which assists operators with remote HMH mechanical handling operations.	Recommend using a software program such as "IGrip" (or similar).

3.4.4.6 Equipment Tolerances

Requirement: Systems and equipment requiring remote installation and maintenance shall have tolerances specified in their design and be as-built with sufficient precision to provide for the ability to remotely install, connect, disconnect, and reconnect all replaceable components. [Section 14.10, ORD, ROIN: 1-40075].

Basis Discussion: As-builts of remote equipment and permanent plant interfaces for the remote equipment provide the ability to remotely install, connect, disconnect, and reconnect all replaceable components.

Verification: Verification is expected to be achieved through:

Verif. Method	Verif. By	Plan	Notes/Comments
I	ENG	Review supplier fabrication and installation drawings to verify compliance with dimensions and tolerances specified in the purchase order	Accomplished during review of submitted G-321-E documents
I	SQR	Inspect equipment to verify dimensions conform to the provided as-built drawings (within established tolerances).	This is expected to be accomplished via the MAP.
I	CON	Take as-built measurements of installed equipment and verify compliance with dimensions and tolerances specified in supplier installation drawings and manuals	Record in equipment inspection record.

3.5 Shield and Containment Door Requirements

3.5.1 Mission and Functional and Performance Requirements (Incl. States/Modes)

3.5.1.1 Engineered Air Gap

Requirement: The HMH shield doors shall provide an engineered air gap which, in conjunction with the facility ventilation system, shall maintain an air cascade with an air flow velocity across the opening in excess of 200 feet per minute with the door closed. [Section 7.1, ORD, ROIN: 8-489][Sections 5.1.2, 11.8.3.1, 12.3.2, BOD, ROIN: 1-40438, ROIN: 1-40441, ROIN: 2-43160, ROIN: 8-15078][Section 4.4.1 PDSA – HLW Facility, ROIN: 2-46201, ROIN: 1-21615A, ROIN: 1-21619][Section 4.2-1, SRD, ROIN: 1-38663].

Basis Discussion: An engineered air gap helps to control the spread of contamination and to maintain the cascading airflow from areas of low contamination to areas of higher contamination
[ALARA]

Verification: Verification is expected to be achieved through the following:

Verif. Method	Verif. By	Plan	Notes/Comments
A	ENG	Perform analysis to verify that the 200 feet/minute air flow velocity around shield door perimeters is met.	
I	ENG	Review the door design to verify conformance to engineered air gap requirements analysis.	
I	CON	Inspect installation design to verify conformance to engineered air gap requirements	

3.5.1.2 Containment Door Sealing

Requirement: The HMH C2 containment doors shall be designed to fully seal against the mating surface to maintain the C5V boundary. [Sections 4.3.9, 4.3.9.1, 4.3.9.2, 4.3.9.3, 5.6.12, PDSA – HLW Facility, ROIN: 40-11525, ROIN: 40-11526, ROIN: 40-11532, ROIN: 40-11539D, ROIN: 40-11534].

Basis Discussion: None.
[ALARA]

Verification: Verification is expected to be achieved through the following:

Verif. Method	Verif. By	Plan	Notes/Comments
I	ENG	Review of C2 containment door design for full sealing around the aperture perimeter.	
I	CON	Inspect installation for full sealing around the aperture perimeter.	

3.5.1.3 Shield Door Locking Devices

Requirement: Provisions shall be provided for physical locks or electronic lock-out to be applied to electrical power sources, controls, or mechanical locking devices on the doors listed below. [Sections

4.4.22, PDSA – HLW Facility, ROIN: 2-41352, ROIN: 2-41353] [Section 11.8.3.1, BOD, ROIN: 2-43161, ROIN: 2-43164].

- HMH doors: HMH-DOOR-00009, -00010, -00014, -00015

Basis discussion: Locks provide a physical barrier to prevent unauthorized or inadvertent entry into areas of potential high radiation source. The lock can be applied to either an electrical and/or mechanical isolation point. Padlocks and hasps are inappropriate for equipment shield doors.

Verification: Verification is expected to be achieved through:

Verif. Method	Verif. By	Plan	Notes/Comments
I	ENG	Review the design for incorporation of physical locking devices, power/control locks, or blocking devices.	Document review in an evaluation/assessment report. Plant engineering to participate or review evaluation/assessment report.

3.5.1.4 Shielding

Requirement: Doors and through-wall devices that fill or cover a penetration through a shield wall shall provide adequate radiation shielding (including guide systems or shield blocks) to reduce personnel exposure to levels acceptable within the Radiation Protection Program. [Sections 4.4.1, 4.4.1.2, 4.4.1.3, PDSA - HLW Facility, ROIN: 1-21614, ROIN: 1-21617A, ROIN: 14-5978] [Section 11.8.3.1, BOD, ROIN: 2-43160].

- HMH doors: HMH-DOOR-00009, -00010, -00014, -00015
- HMH through-wall devices: 30-PLUG-00072, -00073

Basis discussion: Table 2-8 from the General PDSA document (24590-WTP-PSAR-ESH-01-002-01) gives the target equivalent dose rate and the maximum equivalent dose rate for all radiation zones located in the WTP plant.
[ALARA]

Verification: Verification is expected to be achieved through:

Verif. Method	Verif. By	Plan	Notes/Comments
A	ENG	Perform an analysis to verify the required bulk thickness for shield doors and devices that cover or fill a shield wall penetration.	
A	ENG	Evaluate shield doors and through-wall devices for perimeter shine paths, and determine if/where additional shielding features (including guide systems or shield blocks) are necessary.	To be documented in an evaluation/assessment.
I	ENG	Review equipment design to verify conformance with bulk shielding thickness and, where applicable, shine path analyses.	To be documented in an evaluation/assessment.

3.5.1.5 Mounting

Requirement: [**HOLD**] The structural mounting components of the shield and containment doors shall be designed in accordance with DOE-STD-1020-94, ANSI/AISC N690, and AISC M016. [Safety Criterion 4.1-3, SRD, ROIN: 1-38653] [Section 4.4.1.4, PDSA - HLW Facility, ROIN: 45-31547].

Basis Discussion: ANSI/AISC N690 applies to SC-I and II equipment (C2 containment door), while AISC M016 applies to SC-III and IV (C5 and C2/C3 shield doors). This requirement is on "HOLD" pending resolution of 24590-WTP-PIER-MGT-14-1279 [24590-WTP-ATS-MGT-14-0586].

Verification: Verification is expected to be achieved through the following:

Verif. Method	Verif. By	Plan	Notes/Comments
A	ENG	Perform analysis to ensure conformance with DOE-STD-1020-94, ANSI/AISC N690, and AISC M016.	
I	ENG	Review of design for conformance with analysis.	

3.5.2 Nuclear Safety, ALARA, Environmental and Other Regulatory Requirements

3.5.2.1 Fire Barriers

Requirement: The HMH C5 shield doors, C2 containment doors, and C5 door recovery plugs shall be designed to an equivalent rating with the fire rated barrier in which they are contained as required in the UBC and NFPA 101. This includes the following HMH equipment: [Section 10.3.4.7, BOD, ROIN: 1-41107].

- C5 shield doors (HMH-DOOR-00010, HMH-DOOR-00015)
- C2 containment door (HMH-DOOR-00013, HMH-DOOR-00008)
- C5 door recovery plugs (30-PLUG-00072, 30-PLUG-00073)

Basis Discussion: Fire barrier drawings which include barriers related to HMH are the following:

- 24590-HLW-U1-60-00002, *HLW VITRIFICATION BUILDING FIRE BARRIER DRAWING PLAN AT EL. 0'0"*.

Verification: Verification is expected to be achieved through the following:

Verif. Method	Verif. By	Plan	Notes/Comments
I	ENG	Verify all components that penetrate a rated fire-barrier have a fire rating equivalent to the barrier they penetrate. Alternate means of acceptance (testing, equivalency) must be acceptable to the Authority Having Jurisdiction	Document in an evaluation/assessment. Fire Protection AHJ to participate in or review the evaluation/assessment.

3.5.3 System Interface Requirements

None.

3.5.4 Other Technical, Specialty, Operations, and Maintenance Requirements

3.5.4.1 Shield Door Recovery

Requirement: The HMH C5 shield doors shall be capable of being remotely recovered (pulled into the closed position without manned entry into the C3/C5 airlock) using the remote recovery system. [Section 11.8.3.1, BOD, ROIN: 2-43162]. (L.1.1)

Basis Discussion: None.
[ALARA]

Verification: Verification is expected to be achieved through the following:

Verif. Method	Verif. By	Plan	Notes/Comments
I	ENG	Inspect the C5 door design for the ability to be remotely recovered via the door remote recovery system.	
D	SU/COM	Demonstrate shield door recovery in accordance with test plans developed by the Commissioning Remote Handling work group per 24590-WTP-PL-RACT-RT-0001.	

3.5.4.2 Drive Units for Shield and Containment Doors

Requirement: Drive units for the HMH shield doors and C2 containment doors shall be located outside of R5/C5 areas and easily accessible for maintenance when the door is closed. [Section 11.8.3.1, BOD, ROIN: 2-43161, ROIN: 2-43165, ROIN: 2-43166].

Basis Discussion: None.
[ALARA]

Verification: Verification is expected to be achieved through the following:

Verif. Method	Verif. By	Plan	Notes/Comments
I	ENG	Review shield and containment door design to verify drive actuators are located in safely accessible locations.	

3.5.4.3 Shield Door Ease of Decontamination

Requirement: Shield doors shall be designed for ease of decontamination. [Section 7.1, ORD, ROIN: 8-488].

Basis discussion: Door decontamination will be performed using the same methods/agents used on the surrounding room.
[ALARA]

Verification: Verification is expected to be achieved through:

Verif. Method	Verif. By	Plan	Notes/Comments

Verif. Method	Verif. By	Plan	Notes/Comments
I	ENG	Review shield door design and facility architectural room finish schedules, to verify coatings applied to shield door panels are, at a minimum, equivalent to those specified for the room that houses the door panel.	Document in an evaluation/assessment. See 24590-WTP-3PS-AFPS-T0001, appendix D, note 1. Stainless steel cladding exceeds all coating systems.

3.6 Melter Transfer Path Components

3.6.1 Mission Functional / Performance Requirements (incl. states/modes)

3.6.1.1 Weight Support

Requirement: **[HOLD]** The melter load path components, including the melter bogie, rails, melter assembly pad, and area, are designed in accordance with ANSI/AISC N690 to support the entire weight of the melter bogie and melter overpack loaded with a spent melter full of solidified glass during normal and accident conditions. [Section 4.4.13.4 PDSA – HLW Facility, ROIN: 43-1792] [Section 4.1, SRD, ROIN: 1-38653, ROIN: 2-42519].

Basis Discussion: This requirement is on "HOLD" per 24590-WTP-PIER-MGT-14-1279 due to conflicting requirements within the HLW PDSA. The PDSA lists the melter bogie and rails as SC-III, which indicates a design standard of AISC M016. This conflicts with the PDSA listed design standard of ANSI/AISC N690 [24590-WTP-ATS-MGT-14-0586].

Verification: Verification is expected to be achieved through the following:

Verif. Method	Verif. By	Plan	Notes/Comments
A	ENG	Perform an analysis(es) to show components have sufficient structural strength to support heaviest possible load during normal and seismic DBA conditions.	
I	ENG	Review design for conformance to analyses	Document in an evaluation/assessment report.

3.6.1.2 Melter Transport Handling System

3.6.1.2.1 Bogie Handling

Requirement: The WTP Contractor shall provide transport for new and spent melters and new and failed large process equipment between the TOC-provided transport vehicles located near the MAP and the melter caves. [Sections, 1.2 2.1, 3.1, Table 1, ICD 03, ROIN: 2-39773, ROIN: 1-26334, ROIN: 40-5340]. (A.2 – A.5, A.7 – A.9) (B.2 – B.4, B.6 – B.8) (G.2 – G.4, G.6 – G.8) (H.2 – H.4, H.6 – H.8) (I.2, I.3, I.5, I.6) (J.2, J.3, J.5, J.6)

Basis Discussion: The melter transport bogie is designed to transport new and spent melters and large equipment between the MAP and the melter caves.

Verification: Verification is expected to be achieved through the following:

Verif. Method	Verif. By	Plan	Notes/Comments
I	ENG	Review of design for melter transport bogie capability to transport new and spent melters and new and failed large process equipment between MAP and melter caves.	
D	SU/COM	Demonstrate bogie travel between the MAP and the melter caves.	

3.6.1.2.2 Bogie Recovery

Requirement: The HMH system shall provide the ability to remotely recover a failed melter transport bogie positioned inside the C3/C5 airlock. Recovery shall be accomplished without manned access into the C3/C5 airlock and shall include the ability to move a loaded* bogie north, to allow closure of the C5 shield door, and south, to enable transfer of the overpack door from the C5 shield door to the overpack. [Section 7.1, ORD, ROIN: 8-3582] [Section 9.12, BOD, ROIN: 1-41032]. (L.1)
*Carrying an overpack containing a new or failed melter, or a new or failed melter cave vessel.

Basis Discussion: When the bogie is carrying a new melter/vessel, closure of the C5 shield enables manned entry into the C3/C5 airlock regardless of overpack door position. When the bogie is carrying a failed melter/vessel, the C5 shield door must be closed, and the overpack door placed back onto the overpack, before manned entry can occur.
[ALARA]

Verification: Verification is expected to be achieved through the following:

Verif. Method	Verif. By	Plan	Notes/Comments
A	ENG	Perform an analysis to determine the maximum bogie recovery forces.	
I	ENG	Review the HMH design to verify the ability to remotely recover a failed, loaded, melter transport bogie, including sufficient travel range in both directions.	
D	SU/COM	Demonstrate bogie recovery in accordance with test plans developed by the Commissioning Remote Handling work group per 24590-WTP-PL-RACT-RT-0001.	An overpack may not be available for Startup or Commissioning to complete verification.

3.6.1.3 Melter Rails

3.6.1.3.1 Anchoring

Requirement: **[HOLD]** The rails are anchored to the structural concrete in accordance with ACI-349 (embedded plates) or ANSI/AISC N690 (structural steel). [Safety Criterion 4.1-3, SRD, ROIN: 1-38653] [Section 4.4.13.4, PDSA – HLW Facility, ROIN: 43-1793].

Basis Discussion: This requirement is on "HOLD" per 24590-WTP-PIER-MGT-14-1279 due to conflicting requirements within the HLW PDSA. The PDSA lists the rails as SC-III, which indicates a design standard of AISC M016. This conflicts with the PDSA listed design standard of ANSI/AISC N690 [24590-WTP-ATS-MGT-14-0586].

Verification: Verification is expected to be achieved through the following:

Verif. Method	Verif. By	Plan	Notes/Comments
A	ENG	Perform an analysis of rail / anchoring design per ACI-349 and ANSI/AISC N690.	Document in a DVR.
I	ENG	Review rail / anchorage design for conformance to analysis results.	Document in an evaluation/assessment report or DVR.

3.6.1.4 Rail Stops

3.6.1.4.1 Withstand Impacts

Requirement: **[HOLD]** Rail stops are designed to withstand the impact of a melter bogie / melter overpack combination (loaded with a spent melter full of solidified glass) at full melter bogie design speed. [Section 4.4.13, PDSA – HLW Facility, ROIN: 1-21703].

Basis Discussion: The requirement is on "HOLD" because the SDS may add a requirement for the melter overpack to maintain confinement and shielding after a drop event, which may not require the rail stops to withstand impacts [24590-WTP-ATS-MGT-14-0587].

Verification: Verification is expected to be achieved through the following:

Verif. Method	Verif. By	Plan	Notes/Comments
A	ENG/SUP	Perform an analysis to ensure the rail stops are designed to withstand the impact of a melter transport bogie carrying a full load.	Document in an evaluation/assessment.
I	ENG	Review design to verify conformance with analysis that the rail stops are designed to withstand the impact of a fully loaded melter transport bogie.	Document in a DVR.

3.6.2 Nuclear Safety, ALARA, Environmental and Other Regulatory Requirements

None.

3.6.3 System Interface Requirements

3.6.3.1 Power Connection Points

Requirement: Electrical power, suitable for powering the melter transport bogie, shall be provided in the C3/C5 airlock, C2/C3 airlock, and C2 corridor for both sets of melter cave airlocks. (A.3 – A.9) (B.1 – B.9) (G.1 – G.8) (H.2 – H.8) (I.2 – I.6) (J.2 – J.6)

Basis Discussion: Doors that the bogie passes through when traveling between airlocks must be subsequently closed to maintain facility HVAC function. The bogie supply cord cannot be routed through, under, or around the doors, so connection points are needed within individual rooms. [ALARA]

Verification: Verification is expected to be achieved through the following:

Verif. Method	Verif. By	Plan	Notes/Comments
A	ENG	Perform analysis to determine the electrical power the melter transport bogie requires.	
I	ENG	Review design to ensure electrical power, including cord connections, suitable for powering the melter transport bogie is available in the C3/C5 airlock, C2/C3 airlock, and C2 corridor for both sets of melter cave airlocks.	Document in an evaluation/assessment report.

3.6.4 Other Technical, Specialty, Operations and Maintenance Requirements

None.

3.7 Melter Overpack

3.7.1 Mission and Functional / Performance Requirements (incl. states/modes)

3.7.1.1 Construction Standard

Requirement: **[HOLD]** The melter overpack shall be designed and constructed in accordance with ANSI/AISC N690 (structural steel). [Section 4.4.13.4, PDSA – HLW Facility, ROIN: 43-1794].

Basis Discussion: This requirement is on "HOLD" per 24590-WTP-PIER-MGT-14-1279 due to conflicting requirements within the HLW PDSA. The PDSA lists the overpack as SC-III, which indicates a design standard of AISC M016. This conflicts with the PDSA listed design standard of ANSI/AISC N690. The SDS may add a requirement for the melter overpack to maintain confinement and shielding after a drop event [24590-WTP-ATS-MGT-14-0586] [24590-WTP-ATS-MGT-14-0587]. Design and fabrication of the melter overpack is not in the scope of the current WTP contract.

Verification: Verification is expected to be achieved through the following:

Verif. Method	Verif. By	Plan	Notes/Comments
A	ENG	Perform analysis of overpack ANSI/AISC N690 requirements.	Document in DVR.
I	ENG	Review design for conformance with analysis.	Document in an evaluation/assessment report or DVR.

3.7.2 Nuclear Safety, ALARA, Environmental and Other Regulatory Requirements

3.7.2.1 Shielding during Transport

Requirement: The melter overpack shall provide shielding and confinement to mitigate the consequences of an exposure to the facility worker. [Section 4.4.13.4, PDSA – HLW Facility, ROIN: 1-21703].

Basis Discussion: Reference 014328, *HLW Melter Overpack Dose Rates*.
[ALARA]

Verification: Verification is expected to be achieved through the following:

Verif. Method	Verif. By	Plan	Notes/Comments
A	ENG	Perform an analysis(es) to determine the required thickness and configuration of the overpack with a melter in the overpack to provide required shielding and confinement.	
I	ENG	Review design for conformance with the shielding and confinement analysis(es).	

3.7.3 System Interface Requirements

3.7.3.1 Overpack Door Remote Removal and Replacement

Requirement: The C5 shield door shall be capable of remotely removing an unbolted overpack door from an overpack, translating between the opened and closed positions while carrying the overpack door, and placing the overpack door back onto the overpack. (K.1)

Basis discussion: None.
[ALARA]

Verification: Verification is expected to be achieved through the following:

Verif. Method	Verif. By	Plan	Notes/Comments
I	ENG	Review the C5 shield door design to verify capability to remove, transport, and replace an overpack door.	
T	SUP	Demonstrate C5 shield door ability to remove, transport, and replace an overpack door to/from a simulated overpack.	
D	SU/COM	Demonstrate C5 shield door ability to remove, transport, and replace an overpack door from an overpack stationed on the melter transport bogie.	An overpack may not be available for Startup or Commissioning to complete verification.

3.7.4 Other Technical, Specialty, Operations and Maintenance Requirements

None.

3.8 Monitoring and Controls Requirements

3.8.1 Mission and Functional / Performance Requirements (incl. states/modes)

3.8.1.1 Remote Monitoring and Control

Requirement: HMH equipment in the C3/C5 airlock, that operates when the C2/C3 shield door is closed, shall have provisions to be remotely monitored and controlled by personnel positioned outside of the C3/C5 airlock. (F.14)

Basis discussion: The C2/C3 door is closed, and the C3/C5 airlock becomes inaccessible, prior to transferring a melter between the overpack and the melter cave. Equipment in the C3/C5 airlock that operates after C2/C3 door closure must be monitored and controlled by personnel stationed outside of the C3/C5 airlock.
[ALARA]

Verification: Verification is expected to be achieved through the following:

Verif. Method	Verif. By	Plan	Notes/Comments
I	ENG	Review design for provisions enabling remote monitoring and control of equipment in the C3/C5 airlock.	

3.8.2 System Interface Requirements

3.8.2.1 Mechanical Handling Control Design

Requirement: The HMH design shall have the capability of operating the architectural roll-up doors, shield doors and C2 containment door with the MHJ local operator interface (LOI). [Section 9.6.2, BOD, ROIN: 8-15066] [Section 11.5, ORD, ROIN: 1-39993].

Basis Discussion: All actions of the HMH system are manual, locally controlled by operator action.

Verification: Verification is expected to be achieved through the following:

Verif. Method	Verif. By	Plan	Notes/Comments
I	ENG	Review the HMH design to verify the listed HMH equipment/components can be remotely monitored and controlled by the MHJ	Document in an evaluation/assessment.
D	SU/COM	Demonstrate control operations for all the listed HMH equipment/components.	

3.8.2.2 Non-Safety Interlocks

3.8.2.2.1 HVAC Support Interlocks

Requirement: Non-safety interlocks shall be provided to support facility HVAC systems by preventing the following doors from being open simultaneously: [Sections 7.3.4, 9.6.2, BOD, ROIN: 1-40647, ROIN: 8-15066] [Section 11.10, ORD, ROIN: 8-6073]. (F.1.1 – F.1.3)

- Receipt bay rollup door and the C2 containment door
- C2 containment door and C2/C3 shield door
- C2/C3 shield door and the C5 shield door

Basis Discussion: To ensure the proper operation of facility HVAC systems achieving negative pressure to provide cascade airflow from areas with low contamination potential to areas with high contamination potential, doors are prevented from being open simultaneously. This control is subject to automatic control via interlocks. Interlock functionality may be accomplished by hardware, software, or a combination of both.

Verification: Verification is expected to be achieved through the following:

Verif. Method	Verif. By	Plan	Notes/Comments
I	ENG	Review of design to ensure interlocks are provided for the listed doors.	
D	SU/COM	Demonstrate the operability of the door to door interlocks for the listed doors.	

3.8.2.2.2 Door Interlocks

Requirement: The HMH system shall interface with the MHJ to provide the following non-safety interlocks for equipment movements via LOI: [Sections 7.3.4, 9.6.2, BOD, ROIN: 1-40647, ROIN: 8-15066] [Section 11.10, ORD, ROIN: 8-6073] (F.1.4 – F.1.13).

- **Interlocks for C5 Shield Door and the C5 Shield Door Lifting and Locking Cylinders**
  - The MHJ provides an interlock, based on position switches, to ensure that both the C2/C3 and C5 shield doors are closed before engaging the upper locking cylinders.
  - The MHJ provides an interlock to ensure the upper locking cylinders are engaged before engaging the lower lifting cylinders.
  - The MHJ provides an interlock to ensure the C5 shield door is closed before retracting the lower lifting cylinders.
  - The MHJ provides an interlock to ensure the C5 shield door is positioned correctly and the upper locking cylinders are extended before extending the lower lifting cylinders.
  - The MHJ provides an interlock to ensure the lower lifting cylinders are retracted before allowing the C5 shield door to be closed.
  - The MHJ provides an interlock to ensure the upper locking cylinders are extended before allowing the C5 shield door to be opened.
  - The MHJ provides an interlock to ensure the upper locking cylinders are extended before the lower lifting cylinders can be retracted.
  - The MHJ provides an interlock to ensure the C5 shield door is closed before retracting the upper locking cylinders
  - The MHJ provides an interlock to ensure the melter overpack door is positioned within the C5 shield door before allowing C5 shield door travel.

- **Interlocks for C2 Containment Door**
  - The MHJ provides an interlock, based on position switches, to ensure that both receipt bay roll-up doors are closed, the co-located C2/C3 door is closed and locked, and the C2 door is

unlatched (manual operation), before allowing a C2 containment door to unseal (move away from the aperture wall).
- The MHJ provides an interlock, based on position switches, to ensure that both receipt bay roll-up doors are closed, the co-located C2/C3 door is closed and locked, and the C2 door to be actuated is unsealed (out), before allowing a C2 containment door to open.
- The MHJ provides an interlock, based on position switches, to ensure that the C2 door is out (away from the wall), before allowing it to close.
- The MHJ provides an interlock, based on position switches, to ensure the C2 door to be actuated is closed before allowing it to seal (move in against the aperture wall).

- **Engagement of Physical Locks**
  - The MHJ provides an interlock, based on a position switch, to ensure the C2/C3 shield door is closed before engaging a physical lock.
  - The MHJ provides an interlock, based on a position switch, to ensure the C5 shield door is closed before engaging a physical lock.

Basis Discussion: These interlocks are required to ensure the correct sequence of operations and to prevent equipment damage.

Verification: Verification is expected to be achieved through the following:

Verif. Method	Verif. By	Plan	Notes/Comments
I	ENG	Review the HMH equipment design for inclusion of applicable interlocks.	
D	SU/COM	Demonstrate the operability of the door interlocks.	

3.8.2.3 Local Control Interlocks

Requirement: Local Control Stations for the following equipment shall include independent protection interlocks: [Section 11.10, ORD, ROIN: 8-6073].

- C5 shield doors (HMH-DOOR-00010, -00015)
- C2/C3 shield doors (HMH-DOOR-00009, -00014)*
- C2 containment doors (HMH-DOOR-00008, -00013)*

Basis Discussion: The list equipment can be locally operated at local control points. To prevent damage from incorrect operation, device failure, or other undesired conditions, the local control station will have independent protection interlocks to prevent damage to the equipment and instruments in the control station. Independent protection interlocks include, but are not limited to: end stop interlocks which prevent over travel, over speed interlocks, over or under voltage relays, or temperature switches, and variable or adjustable speed drive fault relays.

Verification: Verification is expected to be achieved through the following:

Verif. Method	Verif. By	Plan	Notes/Comments
I	ENG	Review the equipment's local control panel* design for incorporation of independent protection interlocks.	*Where motor starters are located within a WTP motor control

Verif. Method	Verif. By	Plan	Notes/Comments
			center, the motor control center functions as the local control panel
D	SU/COM	Demonstrate the operability of the independent protection interlocks during operation from the local control panels.	

3.8.3 Other Technical, Specialty, Operations and Maintenance Requirements

3.8.3.1 Accessibility for Calibration, Testing, and Inspection

Requirement: The HMH system design shall provide the capability to access and perform direct (out cave) calibration, periodic functional testing, and inspections of equipment and components during normal operation. [Sections 6.7, 8.1.2, 9.12, 11.5.1, 12.6.3, BOD, ROIN: 1-40577, ROIN: 1-40729, ROIN: 1-41030, ROIN: 1-41173, ROIN: 1-41328] [Section 9.1, ORD, ROIN: 8-4345, ROIN: 8-4346].

Basis Discussion: None.
[ALARA]

Verification: Verification is expected to be achieved through the following:

Verif. Method	Verif. By	Plan	Notes/Comments
I	ENG	Review design for configurations that will facilitate replacement/removal or remote calibration of equipment.	Documented in an evaluation/assessment.

3.9 Other Structures, Systems, and Components Requirements

3.9.1 Mission and Functional / Performance Requirements (Including States/Modes)

3.9.1.1 Piping Design

3.9.1.1.1 Codes and Standards

Requirement: The HMH piping design, fabrication, inspection, and testing of the piping shall be in accordance with ASME B31.3, *Process Piping*, 1996 edition, as tailored in Appendix C, Section C.26, of the Safety Requirements Document. [Section 16.4.1.3, BOD, ROIN: 8-5238] [Appendix C, Section C.26, SRD, ROIN: 2-22488].

Basis Discussion: The pipe, flanges, and valves are in accordance with the long stock code descriptions listed in applicable pipe class specifications used for the HMH system. 24590-WTP-3PS-P000-T0001 provides a summary listing of all the pipe class specifications used on WTP. Each pipe class sheet lists the design code used for the specific pipe class specification. The pipe, fittings, flanges, and valves used are in accordance with the design code listed on the specific pipe class specification. There are specific numbered in-line components provided by other engineering disciplines that are in accordance with the design code requirements listed in the applicable engineering specification for the specific component.

Verification: Verification is expected to be achieved through the following:

Verif. Method	Verif. By	Plan	Notes/Comments
A	ENG	Perform an analysis of the piping design in accordance with ASME B31.3, 1996 edition, as tailored in Appendix C, Section C.26, of the SRD.	
I	ENG	Review of the design for conformance to the analysis results.	Documented in an evaluation/assessment that may be performed using a sampling basis or documented in DVR.

3.10 Relevant Codes and Standards

3.10.1 Codes of Record

Table 3-5 identifies relevant external codes and standards applicable to the HMH design. These are selected from those documents that comprise the Code of Record (COR) as established in 24590-WTP-RPT-ENG-01-001, *Technical Baseline Description*, i.e., the WTP Contract, the Basis of Design (BOD), and the Safety Requirements Document Volume II (SRD). Use of these documents is typically invoked in the design process through the documents identified in Section 3.10.2. Beyond inclusion here, no attempt is made in this document to extract individual design requirements from these documents for allocation to SSCs.

In some cases, the expected means of verification may be established on the basis of tests or other criteria required by the codes and standards. This does not necessarily include verification or testing more appropriately defined in the procurement of individual sub-systems or components, or which is a routine activity defined by specifications and/or procedures used by construction and startup.

Table 3-5: HLW HMH Applicable Codes and Standards

Implementing Codes and Standards: [Contract No. DE-AC27-01RV14136, WTP Contract]
• Not applicable
Implementing Codes and Standards: [24590-WTP-DB-ENG-01-001, Rev 2, Basis Of Design]
• AWS D1.1, *Structural Welding Code - Steel.*
• AWS D1.6, *Structural Welding Code - Stainless Steel.*
• AISC M016-89, *Manual of Steel Construction – Allowable Stress Design*, Ninth Edition
• ASCE 7-98, *Minimum Design Loads for Buildings and Other Structures*
• DOE-STD-1020-94, *Natural Phenomena Hazards Design and Evaluation Criteria for Department of Energy Facilities*
• NFPA 101, *Life Safety Code.*
• WAC 173-303, *Washington Administrative Code - Dangerous Waste Regulations.*
Implementing Codes and Standards: [24590-WTP-SRD-ESH-01-001-02, Rev 7c, Section 4, SRD]
• ANSI/ISA-67.04.01-2006, Setpoints for Nuclear Safety-Related Instrumentation, as tailored in Appendix C of the SRD.
• AISC M016-89, Manual of Steel Construction – Allowable Stress Design, as tailored in Appendix C of the SRD.
• AISC N690-1994, Specification for the Design, Fabrication, and Erection of Steel Safety-Related Structures for Nuclear Facilities, as tailored in Appendix C of the SRD.
• ASCE 4-98, Seismic Analysis of Safety-Related Nuclear Structures, as tailored in Appendix C of the SRD.

Table 3-5: HLW HMH Applicable Codes and Standards

• ASCE 7-98, Minimum Design Loads for Buildings and Other Structures, as tailored in Appendix C of the SRD.
• DOE-STD-1020-94, Natural Phenomena Hazards Design and Evaluation Criteria for Department of Energy Facilities, as tailored in Appendix C of the SRD.
• IEEE 323-83, Qualifying Class 1E Equipment for Nuclear Power Generating Stations, as tailored in Appendix C of the SRD.
• IEEE 338-1987, Standard Criteria for Periodic Surveillance Testing of Nuclear Power Generating Station Safety Systems, as tailored in Appendix C of the SRD.
• IEEE 344-1987 (R1993), IEEE Recommended Practice for Seismic Qualification of Class 1E Equipment for Nuclear Power Generating Stations, as tailored in Appendix C of the SRD.
• IEEE 379-1994, Application of the Single Failure Criterion to Nuclear Power Generating Station Safety Systems, as tailored in Appendix C of the SRD.
• IEEE 384-1992, Standard Criteria for Independence of Class 1E Equipment and Circuits, as tailored in Appendix C of the SRD.
• IEEE 497-2002, Standard Criteria for Accident Monitoring Instrumentation for Nuclear Power Generating Stations as tailored in Appendix C of the SRD.
• IEEE 1023-88, Guide for the Application of Human Factors Engineering to Systems, Equipment, and Facilities of Nuclear Power Generating Stations.
• NFPA 70-1999, National Electrical Code
• NFPA 801-2003, Standard for Fire Protection for Facilities Handling Radioactive Materials, as tailored in Appendix C of the SRD.
• UBC-1997, Uniform Building Code, as tailored in Appendix C of the SRD.

3.10.2 WTP Design Criteria, Design Guides, and General Specifications

Table 3-6 identifies relevant discipline design criteria, guides, and general specifications applicable to the HLW HMH. Use of these documents to develop the detailed design of SSCs is governed by engineering procedures. The majority of requirements within these documents are derived from external codes and standards or are specified methods and approaches to achieve standardization and consistency of design. Beyond inclusion here, no attempt is made in this document to extract individual design requirements from these documents for tracing and verification, or to define how direction provided by these documents is applicable and allocated (or not) to individual SSCs.

Table 3-6: WTP Design Criteria, Guides, and General Specifications Applicable to HLW HMH

Document Number	Title
Design Criteria Documents	
24590-WTP-DC-M-06-001	*Mechanical Systems Design Criteria*
24590-WTP-DC-E-01-001	*Electrical Design Criteria*
24590-WTP-DC-E-07-001	*Design Criteria for Electrical Jumpers*
24590-WTP-DC-ENG-06-001	*Design Criteria for Environmental and Natural Phenomena Hazard Qualification of Structures Systems and Components*
24590-WTP-DC-ST-04-001	*Seismic Analysis and Design Criteria*
Design Guides	
24590-WTP-GPG-ENG-086	Equipment Environmental Qualification
24590-WTP-GPG-ENG-0103	Equipment Seismic Qualification
24590-WTP-GPG-ENG-0109	Accessibility Review of Equipment and Components
24590-WTP-GPG-ENG-0127	Processing Engineering Calculations
24590-WTP-GPG-ENG-0141	WTP Radiation Damage Thresholds for Non-Metallic Materials
24590-WTP-GPG-ENG-0150	Plant Design/Mechanical Systems Equipment Interfaces: Terminal End Equipment
24590-WTP-GPG-ENG-0159	Single Failure Analysis Process for Mechanical, HVAC, and Control Systems
24590-WTP-GPG-J-005	Control Systems Interfaces
24590-WTP-GPG-J-014	Control Systems Design Process Guide
24590-WTP-GPG-J-017	WTP Seismic Category Application to C&I Systems
24590-WTP-GPG-M-002	Hydraulic Seals
24590-WTP-GPG-M-036	Determining Quality Level and Seismic Category Classification of Sub-Components, Assemblies, Sub-Assemblies, and Parts
24590-WTP-GPG-M-052	Specifying Design Cycles for Equipment and Piping
24590-WTP-GPG-SRAD-001	Design Guide for ALARA

Table 3-6: WTP Design Criteria, Guides, and General Specifications Applicable to HLW HMH

Document Number	Title
Specifications	
24590-WTP-3PS-G000-T0002	Engineering Specification for Positive Material Identification (PMI) for Shop Fabrication
24590-WTP-3PS-G000-T0015	Engineering Specification for Environmental Qualification of Mechanical Equipment
24590-WTP-3PS-JQ00-T0004	Engineering Specification for Management of Supplier Software
24590-WTP-3PS-JQ06-T0005	Engineering Specification for Environmental Qualification of Control and Electrical Systems and Components
24590-WTP-3PS-JQ07-T0001	Engineering Specification for Instrumentation for Package Systems
24590-WTP-3PS-JQ08-T0001	Engineering Specification for Construction and Installation of Controls and Instrumentation
24590-WTP-3PS-SS90-T0001	Engineering Specification for Seismic Qualification of Seismic Category I/II Equipment and Tanks
24590-WTP-3PS-FB01-T0001	Equipment Specification for Seismic Qualification of Seismic Category III & IV Equipment and Tanks
24590-WTP-3PS-EEC0-T0003	Engineering Specification for Local Operator Interface Workstations

4 System Description

This section summarizes design output information, describing the current design and the operational and maintenance aspects of the system. The information provided below does not contain design requirements and should not be used as design input. The description of the current design contained in this section may not fully align with design requirements. Areas of misalignment are to be identified with a [HOLD] until resolved through appropriate mechanisms and the SDD updated to reflect changes made to the design. Changes to the descriptive text will be made following the changes to the lower tiered Engineering documents.

4.1 Configuration Information

The melter handling system (system HMH) is part of the High Level Waste (HLW) Facility, located on the north face of the building. System HMH equipment supports the primary function of safely installing/removing the HLW melters from melter cave 1 (MC1) and melter cave 2 (MC2). Melter caves 1 & 2 are parallel systems, both identical in operation and layout. The HLW melters, used in the glass-vitrification process, weigh approximately 100 tons when full, and have envelope dimensions not to exceed 172 inches (length) x 164 inches (width) x 146 inches (height).

System HMH comprises (in order north to south) the melter assembly pad (MAP) external of the building envelope, C2 corridor, melter caves 1 & 2 C2/C3 airlocks, and melter caves 1 & 2 C3/C5 airlocks. Two rail systems (one for melter cave 1, one for melter cave 2) connect the north edge of the MAP to the C5 shield doors interfacing with melter caves 1 & 2. Staging area rails on the MAP run east to west allowing the melter staging cart to access either melter cave 1 or 2 rail systems when importing or exporting a melters.

To comply with ALARA and operational requirements, the building envelope enclosing potentially radioactive areas (non C1) of the melter handling system, shielding and containment doors perform in conjunction with the facility Heating, Ventilation, and Air Conditioning (HVAC) systems, to provide shielding and confinement. Areas are classified based on their potential for contamination such as C1 (no contamination), C2, C3 and C5 (high potential contamination), and is controlled by cascading air from areas of lower contamination potential to areas of higher contamination potential. Shield doors and inlets provide engineered air gaps to allow a controlled passage of air from one area to another.

Refer to drawings 24590-HLW-P1-P23T-00103, 00104, 00105, 00108, 00109 and 00110, *HLW Vitrification Building Equipment Location Plan* for room locations.

Figure 4-1: Elevation +0 FT Key Plan

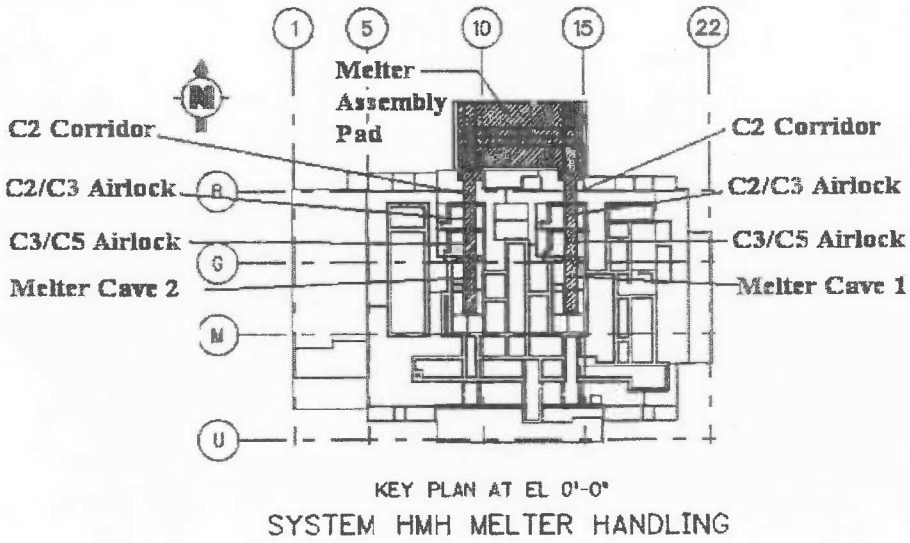

4.1.1 Description of System, Subsystems, and Major Components

4.1.1.1 Description of Mechanical Handling Equipment

System HMH mechanical handling equipment is designed to meet operational and ALARA requirements, with a nominal plant life of 40 years to minimize worker exposure by reducing maintenance and replacement activities. Where commercially available components do not have a design life of 40 years, the equipment is designed to facilitate maintenance. [3.4.1.2.1]

The design of the equipment has been simplified to improve reliability and maintainability where practical, components such as drives motors have been located in accessible areas to aid maintenance activities and the use of plugs for electrical and instrumentation connections are provided (instead of hard wiring) where possible. Features to aid decontamination, such as flat smooth surfaces, elimination of crevices etc, are incorporated into the design. Materials and coatings have been selected to withstand the radiological environment, and withstand decontamination. Wherever possible, permanently lubricated, sealed for life components (bearings) are used to reduce maintenance. [3.4.1.2.2]

4.1.1.1.1 Melter Transport Bogie System

General overview - System HMH melter transport bogie system supports the primary function of safely installing/removing the HLW melters in the HLW Facility. The initial HLW melter is assembled on temporary trestles, subsequent melters will be assembled on the melter staging cart. For the initial melter installation, the melter is transferred directly to the melter transport bogie/melter support base. The melter transport bogie then transports the melter to the melter import/export location, by way of a railed track located within the facility. The melter transport bogie must pass through a series of radiological controlling airlock doors prior to reaching the melter import/export location.

Following approximately 5 years of service, the HLW Melter is expected to reach the end of useful service life, requiring retrieval of the spent melter by system HMH equipment. The melter support base is removed from the melter transport bogie, to allow the installation of a melter overpack that provides shielding and containment of the radioactive spent melter. The spent melter is expected to retain 10 tons of glass over and above the 100 tons estimated weight of a new melter. Once the melter overpack is transferred onto the melter transport bogie, it is moved into the facility to be loaded with the spent melter. The melter transport bogie exits the facility to the MAP. The melter overpack containing the spent melter is removed from the melter transport bogie and set aside for processing.

4.1.1.1.2 Melter Transport Bogie

Plant Item Number: 24590-HLW-MH-HMH-MHAN-00047

Refer to: 24590-HLW-3PS-HCTH-T0002, *Engineering Specification for System HMH Melter Transport Bogie System*

Refer to: 24590-HLW-M0-HMH-00020001, *HLW Vitrification System HMH Design Proposal Drawing Melter Transport Bogie and Support Base*

The melter transport bogie is classified Safety Significant (SS), seismic SC-III, to provide structural integrity in the event of a bogie structural failure or collision with a shield door. [3.4.1.2.4]
The melter transport bogie is capable of performing the following functions; transport a newly assembled melter from the melter assembly pad to melter caves 1 or 2, support/secure the melter overpack while extracting a spent melter from the melter cave utilizing a melter overpack, and to transport the melter overpack containing a spent melter from the melter cave C5 shield door to the melter assembly pad. The melter transport bogie is capable of supporting a melter overpack containing a full failed or spent melter.

The melter transport bogie movement is provided by motorized roller drive assemblies that rides on, and is guided by, the melter assembly pad rails (24590-HLW-MH-HMH-RAIL-00008, MC2, and 24590-HLW-MH-HMH-RAIL-00009, MC1), and the melter airlock rails (24590-HLW-MH-HMH-RAIL-00003, MC1, and 24590-HLW-MH-HMH-RAIL-00006, MC2). The bogie operating speed range is between 0 ft and 5 ft per minute. The bogie speed is based on the most acceptable speed while meeting the positional accuracy requirement of ± 1/8". The bogie acceleration is limited to 0.1g to protect the integrity of a new melter during import from the MAP to the melter cave. Each powered roller assembly has roller guides (on the west side only), to keep the drive on the rails. All maintenance activities for example, the drive system and wheel modules, will take place on the MAP, where personnel accessibility is ALARA. [3.6.1.2.1]

Drive motors are high-starting torque, reversible type, and are of sufficient power and torque output to move the maximum weight of a fully loaded bogie in either direction from any position at the required

speed without exceeding the rated capacity. Each powered roller assembly is provided with a spring-set, electrically released holding brake that defaults to the engaged state when the motor is de-energized or in the event of a complete power loss. The bogie drive system incorporates a feature that allows for bogie position "float" mode. This "float" feature is required to allow the bogie to freely translate along the rails during interfacing with the overpack and the C5 shield door positioning lock pins. Power to the bogie is supplied by a cord which is connected to wall-mounted plugs located in each of the individual rooms the bogie travels through. This enables the bogie to be easily connected/disconnected from facility power while being moved from one area to another, thus allowing the facility doors to be opened and closed to maintain HVAC airflow control.

The bogie incorporates three position indicator switches to signal bogie position. The sequence of operation is as follows: (1) One switch indicates that the bogie has reached the door interface position. (2) One switch indicates that the bogie has reached the backed off position. (3) One switch indicates melter delivery position.

The bogie incorporates a partition that can be manually positioned adjacent to the lower front edge of the bogie to help maintain proper HVAC system flow balance and air gap flow velocity requirements, and strike plates at appropriate positions on the framework to interface with the rail end stops. For installation of the initial melter, the melter transport bogie has a detachable melter support base that makes up the height to the melter cave floor. See Figure 4-2 for melter transport bogie.

Figure 4-2: Melter Transport Bogie

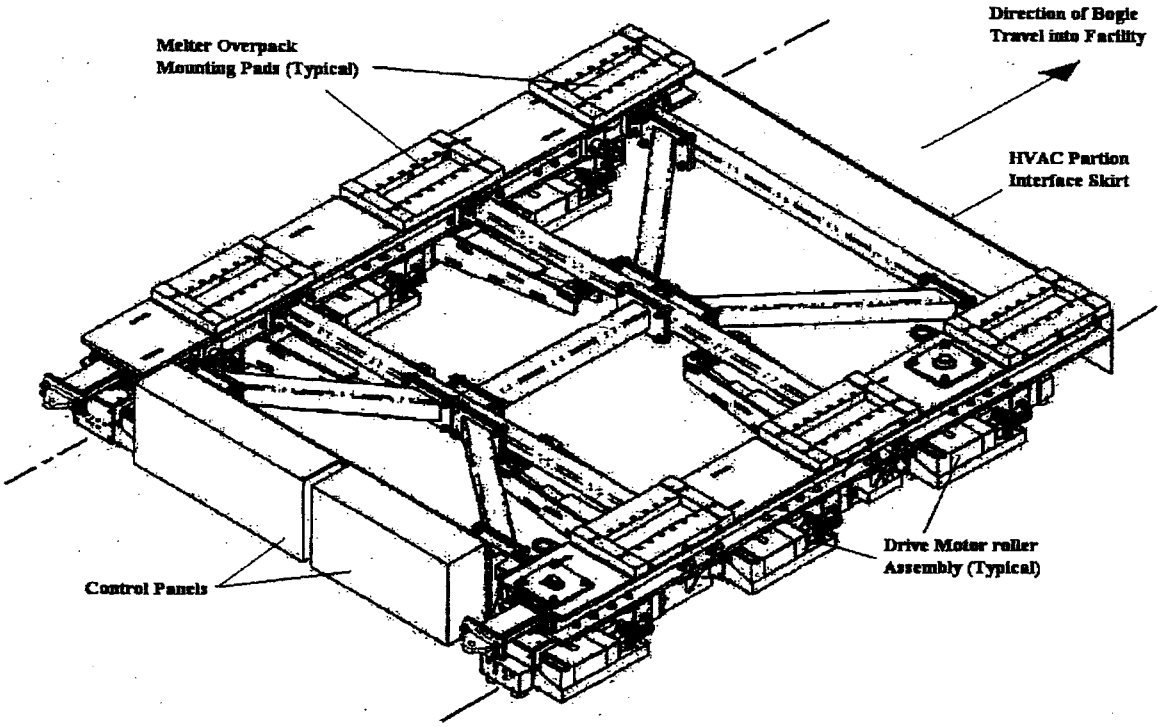

4.1.1.1.3 Melter Support Base

Plant Item Number: 24590-HLW-MH-HMH-MHAN-00049

Refer to: 24590-HLW-3PS-HCTH-T0002, *Engineering Specification for System HMH Melter Transport Bogie System*

Refer to: 24590-QL-POA-MQTS-00003-03-00004

Refer to: 24590-HLW-M0-HMH-00020001, *HLW Vitrification System HMH Design Proposal Drawing Melter Transport Bogie and Support Base*

The melter support base is classified Commercial (CM), seismic SC-III.

The melter support base is only used for installation of the initial melters into melter caves 1 and 2, as the requirement for the shielded overpack is not required prior to removal of a failed radioactive (hot) melter. Because the detachable melter support base will interface with melter transport bogie in exactly the same way as the melter overpack, the design has been based on the weight of a loaded melter overpack and its critical interfacing dimensions. Attachment features of the support base have been designed for simplicity of use. Swivel hoist rings are attached to aid installation and removal of the support base using a temporary crane.

The melter support base is designed to interface with the wheel structure of the HLW melter. The support base has detachable stops at either end, to restrict movement of the melter during transfer operations. The rails have a top of rail at elevation +2 ft 11 in when installed on the melter transport bogie, and interface with the melter cave rails to allow import of the melter into the melter cave (MC1 or MC2) via the HSH system handling components. See Figure 4-3.

Figure 4-3: Melter Support Base

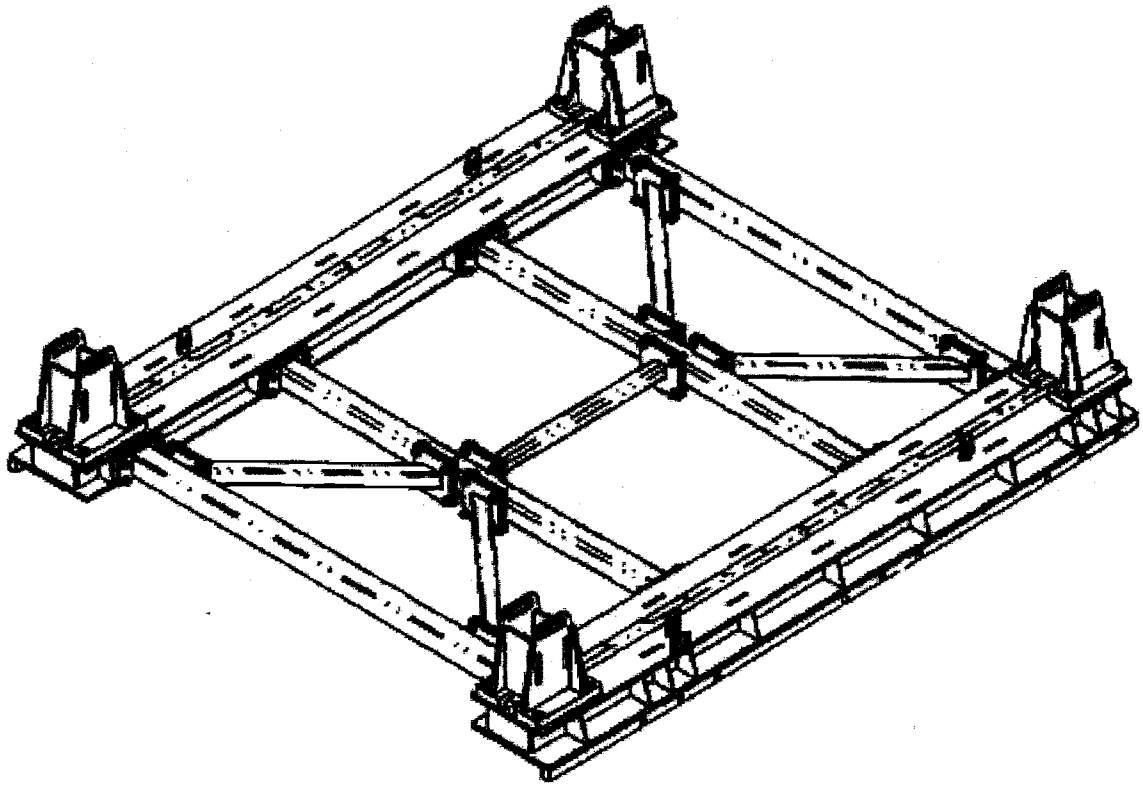

4.1.1.1.4 Melter Assembly Pad Rails

Plant Item Numbers: *24590-HLW-MH-HMH-RAIL-00008 (MC2)*
24590-HLW-MH-HMH-RAIL-00009 (MC1)

Refer to: 24590-HLW-3PS-HCTH-T0002, *Engineering Specification for System HMH Melter Transport Bogie System*

Refer to: 24590-HLW-M0-HMH-00018004, *HLW Vitrification System HMH Design Proposal Drawing Melter Assembly Pad Rails Details*

Refer to: 24590-HLW-M0-HMH-00018001 and -00018002, *HLW Vitrification System HMH Design Proposal Drawing Melter Assembly Pad,* for location of rail stops (note 15)

The melter assembly pad (MAP) rails and rail stops are classified Safety Significant (SS), seismic SC-III, to provide structural integrity. [3.4.2.1]

The MAP rails comprise of two (2) sets, one set for MC1 and one set for MC2. The rails are capable of supporting and directing the travel of the melter transport bogie with a melter overpack, containing a spent melter (360 tons total). Rail and sole plates are designed to accommodate rail clips, to secure the rail to the sole plate and allow rail placement tolerances to be achieved. The sole plates are designed to

interface with the floor trench, required for wash-down activities, and are drilled and tapped to accommodate 3/4-10UNC jacking bolts used for leveling and height adjustment, during installation.

Rail sections that support and interface directly with the melter transport bogie rollers, while the melter transport bogie is in its operating position, will not sustain any permanent deformations or permanent damage from the melter transport bogie rollers. Removable rail end stops are provided at the ends of each rail and at other locations that protect the facility airlock doors during melter movement activities. The end stops are capable of withstanding the impact of a fully laden melter transport bogie, traveling at full operating speed, without exceeding allowable stress levels.

When the MAP rails are not in use, rail access cover plates are placed to cover the rail trench for ease of transporting equipment over the rails and a safety feature for facility workers. The cover plates are weatherproof as to help keep rails dry while covering the trench. During Melter/overpack import/export operations, the rail-access cover plates will be removed and stored locally.

4.1.1.1.5 Melter Airlock Rails

Plant Item Numbers: *24590-HLW-MH-HMH-RAIL-00003 (MC1)*
24590-HLW-MH-HMH-RAIL-00006 (MC2)

Refer to: 24590-HLW-3PS-HCTH-T0002, *Engineering Specification for System HMH Melter Transport Bogie System*

Refer to: 24590-HLW-M0-HMH-00018003, *HLW Vitrification System HMH Design Proposal Drawing Melter Airlock Rails Details*

Refer to: 24590-HLW-M0-HMH-00018001 and -00018002, *HLW Vitrification System HMH Design Proposal Drawing Melter Assembly Pad,* for location of rail stops (note 15)

The melter airlock rails and rail stops are classified Safety Significant (SS), seismic SC-III, to provide structural integrity. [3.4.1.2.4, 3.4.2.1]

The melter airlock rails comprise of two (2) sets, one set for MC1 and one set for MC2. The rails are capable of supporting and directing the travel of the melter transport bogie with a melter overpack, containing a spent melter (360 tons total). Rail and sole plates are designed to accommodate rail clips, to secure the rail to the sole plate and allow rail placement tolerances to be achieved. The sole plates are designed to interface with the floor trench, required for wash-down activities, and are drilled and tapped to accommodate 3/4-10UNC jacking bolts used for leveling and height adjustment, during installation.

The melter airlock rails and sole plates are designed with sufficient structural integrity to withstand a hydraulic ram used in the recovery of a failed melter transport bogie. The sole plates incorporate tapped holes and shear lugs used for attachment and reaction forces of the hydraulic ram design.

Rail sections that support and interface directly with the melter transport bogie rollers, while the melter transport bogie is in its operating position, will not sustain any permanent deformations or permanent damage from the melter transport bogie rollers. Removable rail end stops are provided at the ends of each rail and at other locations that protect the facility airlock doors during melter movement activities. The end stops (SS, seismic SC-III) are capable of withstanding the impact of a fully laden melter transport bogie, traveling at full operating speed, without exceeding allowable stress levels. The end stops protect

the melter airlock confinement and shield doors form a moving bogie, and prevent the melter bogie from moving off the end of the MAP when the transporter is not present.

When the melter airlock rails are not in use, rail access cover plates are placed to cover the rail trench for ease of transporting equipment over the rails and a safety feature for facility workers. The cover plates are weatherproof as to help keep rails dry while covering the trench. During Melter/overpack import/export operations, the rail-access cover plates will be removed and stored locally. See Figure 4-4 for typical rail, rail section and end stop.

Figure 4-4: Rail System

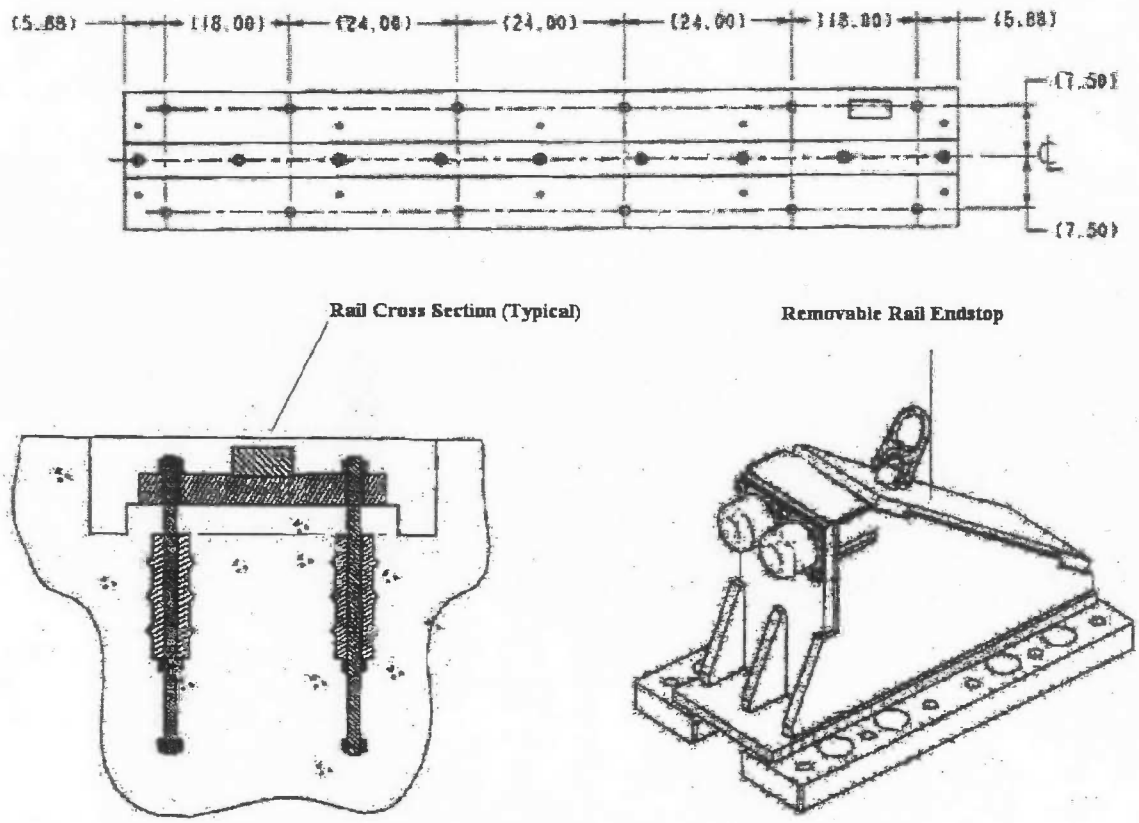

4.1.1.1.6 Melter Staging Cart

Note, the following is for information only. The melter staging cart is not being procured by BNI as part of the melter transport bogie procurement at this time. This melter staging cart is a proposal for future melter assembly on the MAP when required.

Plant Item Number: 24590-HLW-MH-HMH-MHAN-00048

Refer to: 24590-HLW-3PS-HCTH-T0002, *Engineering Specification for System HMH Melter Transport Bogie System*

Refer to: 24590-HLW-M0-HMH-00019001, *HLW Vitrification System HMH Design Proposal Drawing Melter Staging Cart*

The melter staging cart is classified Commercial (CM), seismic SC-III.

The melter staging cart is capable of transferring the assembled melter to the melter transport bogie with the melter support base or melter overpack fitted to the melter transport bogie. The structure is capable of transferring the melter to either the east or west melter transport bogie locations. The melter staging cart is designed to interface with the wheel structure of the melter. Rail sections that support and interface directly with the melter rollers do not sustain any permanent damage from the rollers.

The staging cart provides sufficient precision and rigidity to allow assembly of a new melter to within ±1/64". Additional temporary blocking may be provided to provide additional stiffness to the cart framework to assure overall cart deflection is limited to ±1/16" in any direction during cart movement with an assembled melter. The staging cart has permanent, precision benchmark targets milled on upright stainless steel plates to allow leveling the staging cart prior to melter fabrication. Targets allow surveying from a single location.

The melter staging cart interfaces with, and allows precision placement of the melter lid and seismic lug fixtures. The staging cart is provided with a winch system that allows moving the cart between the MAP rails (east to west) or to any intermediate position between. See Figure 4-5.

Figure 4-5: Proposed Melter Staging Cart

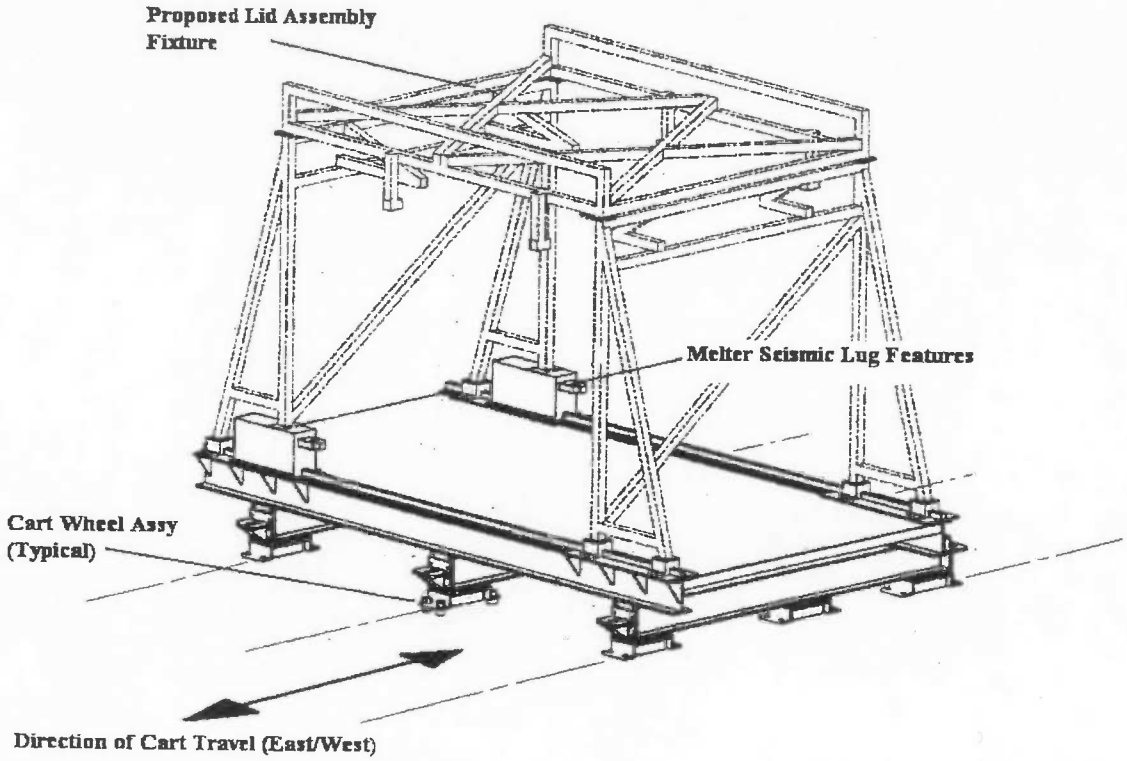

4.1.1.1.7 Melter Staging Cart Rails

Note, the following is for information only. The melter staging cart rails are not being procured by BNI as part of the melter transport bogie procurement at this time. This melter staging cart rail system is a proposal for future melter assembly on the MAP when required.

Plant Item Number: 24590-HLW-MH-HMH-RAIL-00012

Refer to: 24590-HLW-3PS-HCTH-T0002, *Engineering Specification for System HMH Melter Transport Bogie System*

Refer to: 24590-HLW-M0-HMH-00018004, *HLW Vitrification System HMH Design Proposal Drawing Melter Assembly Pad Rails Details*

The melter staging cart rails are classified Commercial (CM), seismic SC-III.

The melter staging cart rails are capable of supporting and directing the travel of the melter staging cart (with an assembled new melter) and is designed to interface with the wheel structure of the melter staging cart. Rails and sole plates are designed to accommodate rail clips to secure the rail to the sole plate and allow rail placement tolerances to be achieved. The sole plates are drilled and tapped to accommodate 3/4-10UNC jacking bolts used for leveling and height adjustment during installation.

Rail stops are provided at the ends of each rail. The end stops are capable of withstanding the impact of a fully laden melter staging cart, traveling at full operating speed, without exceeding allowable stress levels. When the melter staging cart rails are not in use, rail access cover plates are placed to cover the rail trench for ease of transporting equipment over the rails and a safety feature for facility workers. The cover plates are weatherproof to keep rails dry while covering the trench. During melter/overpack import/export operations, the rail-access cover plates will be removed and stored locally. See Figure 4-6 for proposal drawing.

Figure 4-6: Proposed Melter Staging Cart Rails

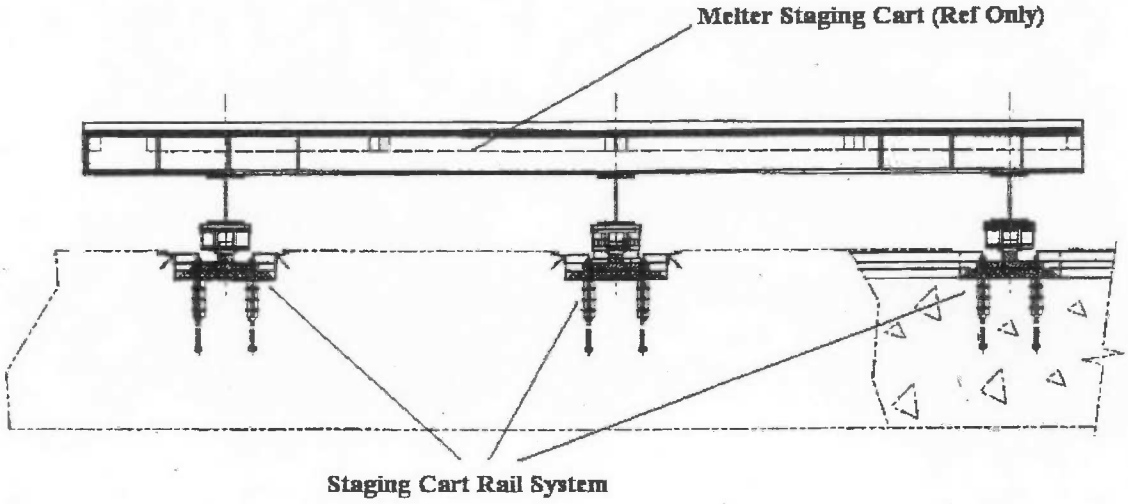

4.1.1.1.8 HLW Melter Overpack

Note, the following is for information only. The melter overpack is not being procured by BNI as part of the melter transport bogie procurement at this time. This melter overpack is a proposal for future melter import/export when required.

Plant Item Number: *24590-HLW-MH-HMH-MHAN-00012 (MC1)*
24590-HLW-MH-HMH-MHAN-00023 (MC2)

Refer to: 24590-HLW-3PS-ADDH-T0001, *Engineering Specification for System HMH Shield Doors, Containment Doors and Melter Overpack*

Refer to: 24590-HLW-M0-HMH-00021001, *HLW Vitrification System HMH Design Proposal Drawing Melter Overpack Assembly*

Refer to: 24590-HLW-M0-HMH-00021002, *HLW Vitrification System HMH Design Proposal Drawing Melter Overpack Details*

The melter overpack is classified Safety Significant (SS), seismic SC-III, to provide structural. [3.4.1.2.4, 3.4.2.1, 3.7.1.1]

The melter overpack is a steel, shielded, enclosure for the transport, interim storage, and final disposition of the HLW melter. Due to the high radiation levels associated with a spent melter, the walls of the melter overpack have a nominal shielding thickness of approximately 8 inches of carbon steel. The safety function of the overpack is to provide adequate radiation shielding and an adequate confinement boundary to contain loose contamination associated with a spent or failed Melter. This is accomplished through steel shielding; confinement provisions that may include such features as welded, or otherwise acceptably sealed joints; and a HEPA filtered vent. [3.7.2.1]

To allow for importing and exporting of the melter, the overpack is provided with a closure shield door. The closure shield door is supported by pins attached to the closure door. The door provides features to prevent unacceptable radiation streaming during operations requiring manned access to effect overpack closure completion. The overpack includes provisions to achieve a high integrity mechanical seal for all penetrations that pass through the overpack structure. All penetrations are designed to facilitate ease of seal welding which may be used to achieve a long-term closure configuration.

The melter overpack is designed to interface with the system HMH C5 shield door (24590-HLW-AD-HMH-DOOR-00010, MC1 and 24590-HLW-AD-HMH-DOOR-00015, MC2) to allow for removal and installation of the melter overpack closure shield door using handling and alignment features of the C5 door. The overpack has a rail system on the lower interior surface that interfaces with the melter wheels, the rail/roller interface is used during importing/exporting of the melter into and out of the melter overpack.

The estimated weight of the overpack is 250 tons empty, and 360 tons when loaded with a spent/failed melter full of glass (melter + glass approx 100 tons). The overall dimensions of the overpack are 200" long, 192" wide, by 172" high. The dimensions of the removable overpack closure door on the front side of the overpack (south side) are 208" wide, 172" high, by 8" thick. During final assembly of the overpack, the height between the internal rails and the melter transport bogie rollers are capable of being adjusted (using shims or similar means) to "match" the as-built rail height difference between the rails inside of the overpack and the rails in the melter cave.

The overpack includes melter restraint features to restrain the melter motion along the internal rails during overpack movement operations. The aggregate working load limit of the restraint system is sufficient to restrain melter movement in any direction with capacity at least 1/2 times the weight of the spent HLW Melter.

The overpack contains a dedicated winching system located in a shielded enclosure permanently attached external to the main overpack enclosure. The winching system retrieves the new melter into the overpack from the melter staging cart (24590-HLW-MH-HMH-MHAN-00048), while limiting the melter acceleration to 0.1 g. The winching system is also used in the remote retrieval of the spent melter from melter caves 1 & 2. The overpack winch hook is remotely accessible with the melter cave crane mounted power manipulator when the overpack is located at C5 shield door interface position with door open. The overpack winch provides a constant braking force when importing the melter with the system HSH melter import winch. Braking is required to maintain constant tension in the import winch cable to prevent melter accelerations from exceeding 0.1g due to potential release of strain energy in the cable during transition from static to rolling friction.

After receiving a new or failed/spent melter into the overpack, the winch system is required to maintain a constant tension in the cable to ensure melter stability during transit. The winching system is sized to retrieve the spent/failed melter under assumed conditions that two (2) wheels are seized on the melter (weighing approximately 100 tons) and that the rails are dry. At the conclusion of melter import activities, the winch wire rope will be spooled out into the melter cave, it will therefore be necessary to retrieve the wire rope into the overpack prior to closure of the shield doors. The wire rope will not be in tension during retrieval, the winch drum is equipped with a pressure roller to ensure proper re-spooling of the wire rope.

The overpack closure door, when preliminary closure is established, is sealed against the overpack enclosure flange using a high integrity seal, which is compatible with subsequent seal welding operations for long term overpack closure. The seal is a double seal configuration; with leak testing provision (including a leak test volume between the seals) such as would be required during a helium leak test. The seal is an "airtight" seal, and meets the requirements to allow the melter overpack to comply with HNF-EP-0063, *Hanford Site Solid Waste Acceptance Criteria (HSSWAC)*. Closure bolts are used to obtain the required seal compression as per the seal manufacturer's recommendations.

All penetrations and electrical bulkheads to the overpack enclosure area designed to provide adequate radiological shielding. In addition, the penetrations and bulkheads include features that will allow preliminary closure with leak testable metal o-ring seals, and long-term closure with a seal-welded interface.

The overpack closure door interfaces with the C5 shield door. The overpack closure door incorporates door support pins provided with appropriate alignment features, which support the overpack closure door weight. The door support pins interface with mating features of the overpack enclosure, guide the door during remote reinstallation, and supports the door until closure bolts (fasteners) have been manually installed. The support pins and interfacing contact surfaces of the overpack flange are fabricated from suitable materials to prevent excessive binding or galling at the interface during operations requiring or having the potential for sliding motion along the interface.

The overpack incorporates a certified, testable, nuclear High Efficiency Particulate Air (HEPA) filtered vent that meets Washington Administrative Code (WAC) and Department of Transportation (DOT) 7A requirements, to prevent unacceptable pressurization and the release of radioactive material from the

overpack. The overpack includes grout filling ports and venting port(s) that will facilitate future grouting capability if required. The overpack is provided with removable tie-down mechanisms and means to interface properly with the truck/trailer during overpack transport. The overpack exterior surfaces are covered by stainless steel sheet (304L) with a thickness of 1/8" to ease decontamination of its outer surface, and to protect the overpack from water damage. See Figure 4-7.

Figure 4-7: Melter Overpack

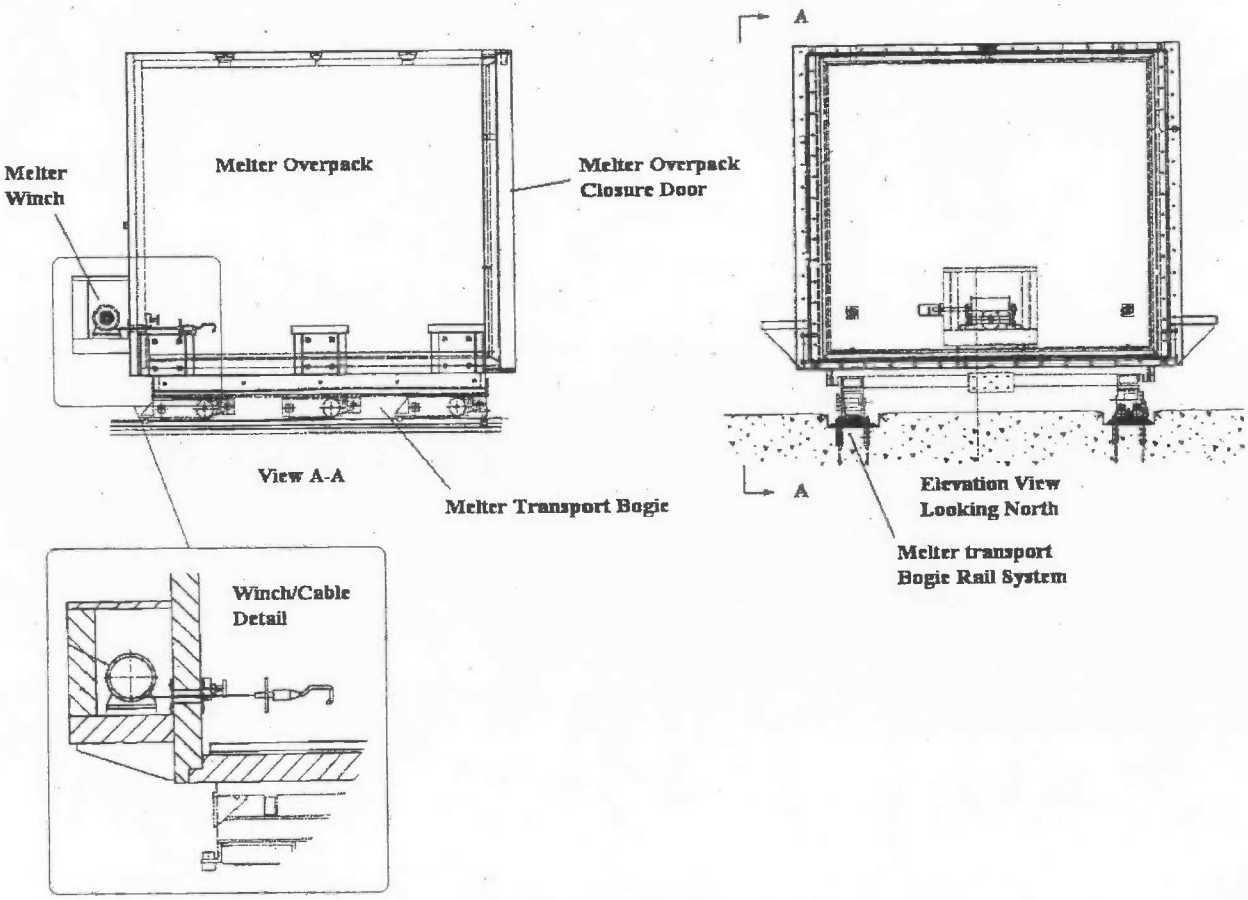

4.1.1.1.9 Melter Overpack Lift System and Stands

Note, the following is for information only. The melter overpack lift system is not being procured by BNI as part of the melter transport bogie procurement at this time. This lift system is a proposal for future melter overpack when required.

Plant Item Number: 24590-HLW-MJ-HMH-LIFT-00001

Refer to: 24590-HLW-3PS-HCTH-T0002, *Engineering Specification for System HMH Melter Transport Bogie System*

The melter overpack lift system is classified Safety Significant (SS), seismic SC-III, to provide structural integrity.

The lift system is capable of raising and supporting a fully loaded melter overpack with spent melter, simultaneously. The system is capable of raising the equipment high enough to repair failed drive components of the melter transport bogie. The raised height allows for separation and extraction of the melter transport bogie from the overpack. Support stands (or positive mechanical lockouts) are provided as necessary, to protect against an unsafe load due to a failed lifting device. In conjunction with the melter transport bogie, the lift system maintains compliance for alignment between a loaded overpack or melter support base, and the melter transport bogie.

4.1.1.2 Containment Doors and Shield Doors

Movement of the melter transport bogie, melter overpack and melter to melter caves 1 & 2 from the melter assembly pad requires the melter transport equipment to move through four doors. The door configurations for melter caves 1 & 2 are identical in design and operational requirements and are described in the following sections.

4.1.1.2.1 Architectural Roll-Up Doors

Plant Item Number: *24590-HLW-AD-HMH-DOOR-00011 (MC1)*
24590-HLW-AD-HMH-DOOR-00012 (MC2)

Refer to: 24590-WTP-3PS-ADRC-T0001, *Engineering Specification for Vertical and Horizontal Coiling Doors 08331*

The MAP and corridor HC0104 are separated by two architectural roll-up doors, receipt bay door HMH-DOOR-00011 (for melter cave 1 rail system), and receipt bay door HMH-DOOR-00012 (for melter cave 2 rail system). The doors provide environmental performance requirements per the engineering specification. The doors are motor driven open and closed, and the door openings are sized to allow passage of the melter overpack and transport bogie without interference.

4.1.1.2.2 C2 Containment Door

Plant Item Numbers: *24590-HLW-AD-HMH-DOOR-00008 (MC1)*
24590-HLW-AD-HMH-DOOR-00013 (MC2)

Refer to: 24590-HLW-3PS-ADDH-T0001, *Engineering Specification for System HMH Shield Doors, Containment Doors and Melter Overpack.*

Refer to: 24590-HLW-M0D-HMH-00001, *24590-HLW-AD-HMH-DOOR-00008 – C2 Containment Door Melter Cave 1 Data Sheet.*

Refer to: 24590-QL-POA-ADDH-00009-09-00205, *Drawing – As Built C2 Containment Door – C2-1 (24590-HLW-AD-HMH-DOOR-00008).*

The C2 containment doors are classified Safety Class (SC), seismic SC-I, to provide structural integrity and to maintain the C5 containment boundary. [3.4.1.2.4, 3.4.2.1]

The C2 containment doors are located on elevation +0 ft between corridor HC0104 and room H-0116A (MC1 – C2/C3 Airlock), and corridor HC0104 and room H-0105A (MC2 – C2/C3 Airlock). The C2 containment door, normally closed and sealed, is opened to allow a clear path for the passage of the

melter overpack and transport bogie, and other melter cave equipment into and out of the C2/C3 airlock. When closed and in the sealed position, the C2 containment door provides a Safety Class (SC) sealed boundary between the C2 corridor and the C2/C3 airlock. The C2 containment door has no specific requirements pertaining to radiological shielding. [3.5.1.1, 3.5.1.4]

The doors dimensions are 226" wide, 195" high, by 10" thick, and weigh approximately 8 tons. The door is horizontally translating, and is driven open and closed by an electric motor driven lead screw at a travel speed of 6-8 feet per minute during nominal full-speed travel. The drive motors are high-starting torque, reversible type, and are of sufficient power and torque output to move the door in either direction from any position at the required speed without exceeding the rated capacity. The door includes interlocking and control features, including position sensing (proximity switches) and interfaces with the facility MHJ system. The door drive system is provided with a slipping clutch coupling and/or torque limiter, to prevent stalling of the motor or damage to drive system components in the event of a malfunction.

Drive system components are accessible from the side of the door adjacent to corridor HC0104, with the door in the fully closed and sealed position. Drive components are accessible without breach of the seal boundary, and are capable of being removed and replaced without significantly affecting the structural characteristics of the door and its supports. Clutches default to the engaged position when they are de-energized or lose power. Fail-safe brakes, that engage when the motor is de-energized, are incorporated into the drive systems such that there is an individual brake unit for each individual screw, chain, etc. that attaches directly to the door. The brakes default to the engaged state when they are de-energized or lose power and have a manual release mechanism.

When the door is in the fully closed position, the door perimeter seals against a compressible face seal installed on the vertical face of the embedded liner around the door opening. The sealing method requires additional horizontal translating motion to drive the door against the compressible face seal interface. This drive motion is accomplished using an electric powered drive motor and supporting drive equipment. The door is manually locked in the closed position with the use of levers located on both the east and west end faces of the door. To accommodate the rail system that passes through the lower horizontal surface of the door opening, a lower seal plate, capable of being attached to the facility embeds using threaded fasteners, incorporating seals of similar configuration and construction to the embed liner face seals, and of sufficient strength to resist the lateral push forces of the seal compression, are provided for sealing along the lower edge of the door perimeter. See Figure 4-8.

Figure 4-8: C2 Containment Door

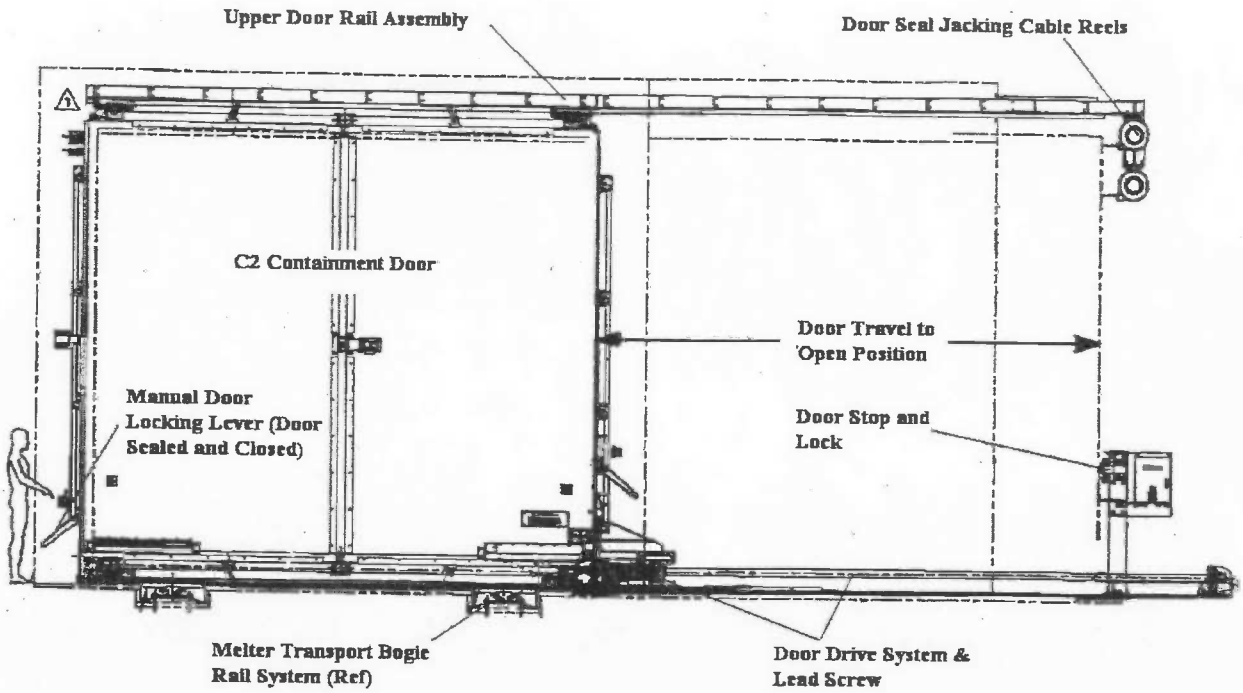

4.1.1.2.3 C2/C3 Shield Door

Plant Item Numbers: *24590-HLW-AD-HMH-DOOR-00009 (MC1)*
24590-HLW-AD-HMH-DOOR-00014 (MC2)

Refer to: 24590-HLW-3PS-ADDH-T0001, *Engineering Specification for System HMH Shield Doors, Containment Doors and Melter Overpack.*

Refer to: 24590-HLW-M0D-HMH-00004, *24590-HLW-AD-HMH-DOOR-00009 – C2/C3 Shield Door Melter Cave 1 Data Sheet.*

Refer to: 24590-QL-POA-ADDH-00009-09-00033

The C2/C3 shield doors are classified Safety Significant (SS), seismic SC-II, to provide shielding, structural integrity and to maintain the C5 containment boundary. [3.4.1.2.4, 3.4.2.1]

The C2/C3 shield doors are located on elevation +0 ft between room H-0116A (MC1 – C2/C3 airlock) and room H-0116B (MC1 – C3/C5 airlock), and room H-0105A (MC2 – C2/C3 airlock) and room H-0105B (MC2 – C3/C5 airlock). The C2/C3 shield door, normally closed, is opened to allow a clear path for the passage of the melter overpack into and out of the C3/C5 airlock. When the C2 containment door is closed, the C2/C3 door provides a HVAC leakage area around the perimeter of the door of roughly 4 sq ft. When the C2 door is open, the C2/C3 door provides a leakage area of 1 sq ft. The C2/C3 shield door is expected to open on an annual basis for visual inspection of the air lock, and once every five years to support melter change out. The shield door interfaces with an adjacent embed liner to achieve an engineered air gap for proper system flow balance and air gap flow velocity requirements. [3.5.1.1]

The doors are 226" wide, 196" high, by 9.5" thick (not solid, clad tubular framework) providing radiological shielding equivalent to 1.5 inches of steel (to satisfy ALARA requirements) and weigh approximately 14 tons. Similar to the C2 containment door, the door is a single-slide, horizontally translating door, with supporting rail and guiding features, with a door travel distance sufficient to ensure a clear opening of 214" wide x 198" high. The door is power operated by an electric motor driven lead screw, of which the motor has high-starting torque, reversible, and is of sufficient power and torque output to move the door in either direction from any position at the required speed without exceeding the rated capacity. Moving parts of the door drive system are guarded to protect personnel from injury.

The door drive system is designed to operate the door at a travel speed of 6-8 feet per minute during nominal full-speed travel, and has mechanical overload devices instrumented with trip switches to provide the control system with a signal that a malfunction has occurred. The door has interlocking and control features (proximity switches) that interface with the MHJ system to indicate the door is in the open or closed position. The leading edge of the door has a safety device that will immediately reverse the door movement upon contact with or sensing of an obstruction, and cause the door to return to its full open position.

The doors interface with the C2/C3 shield door embed liners for structural support/anchorage, when in the fully closed position, the door interfaces with the adjacent encast liner to achieve a nominal 0.75 inch air gap. The air gap is capable of being adjusted from room H-0116A & H-0105A with the door installed, and in the fully closed position so as to affect an HVAC design airflow of approximately 2400 SCFM through the air gap. The air gap is adjustable in the range of 0.5 inch to 0.75 inch. To accommodate the melter transport bogie rail system that passes through the lower horizontal area of the door opening, the doors lower guiding and supporting rail system incorporates removable sections capable of being attached to the facility embeds using threaded fasteners. These removable sections will normally be installed, and do not interfere with the normal translating motion of the C2/C3 shield door, and are easily removable to allow the melter overpack to pass through the door opening on the melter rail system. See Figure 4-9. [3.5.1.1, 3.5.1.2]

Figure 4-9: C2/C3 Shield Door

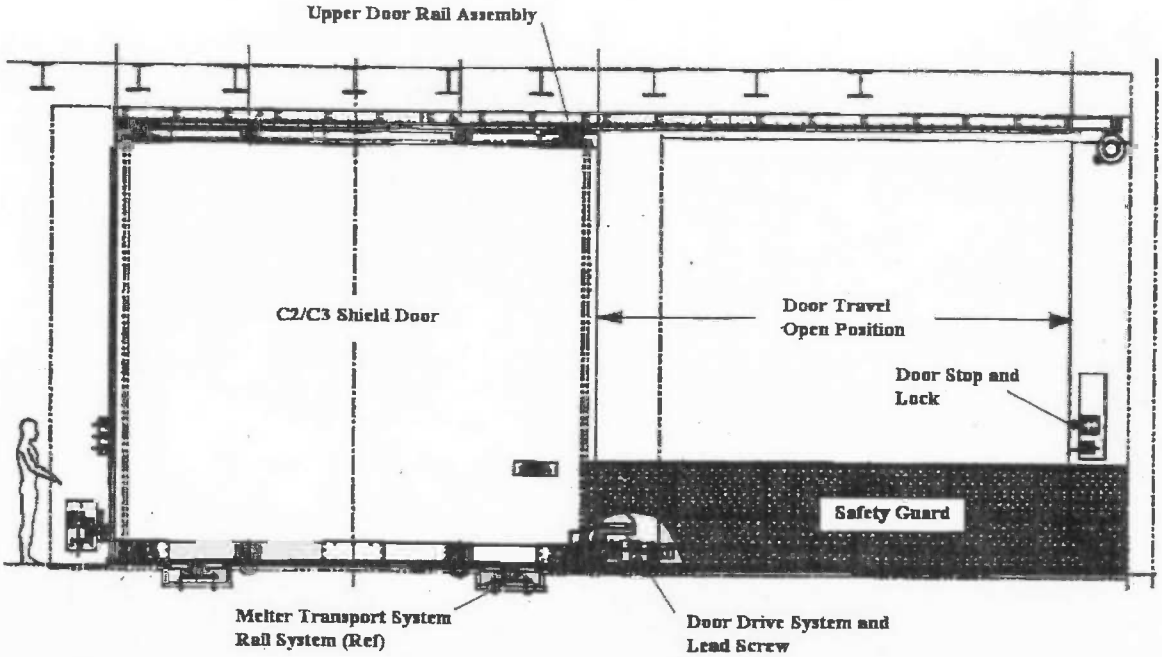

4.1.1.2.4 C5 Shield Door

Plant Item Numbers: *24590-HLW-AD-HMH-DOOR-00010 (MC1)*
24590-HLW-AD-HMH-DOOR-00015 (MC2)

Refer to: 24590-HLW-3PS-ADDH-T0001, *Engineering Specification for System HMH Shield Doors, Containment Doors and Melter Overpack.*

Refer to: 24590-Ql-POA-ADDH-00009-09-00123, *C5 Shield Door Assembly Drawing Shield Door Hydraulics Melter Handling Melter 1.*

Refer to: 24590-HLW-M0D-HMH-00005 – *C5 Shield Door Melter Cave 1 Mechanical Handling Data Sheet.*

Refer: 24590-QL-POA-ADDH-00009-03-00035, *Procedure – Factory Acceptance Test Procedure, C5 Shield Door*

The C5 shield doors are classified Safety Significant (SS), seismic SC-II, to provide shielding, structural integrity and to maintain the C5 containment boundary. [3.4.1.2.4, 3.4.2.1]

The C5 shield doors are located on elevation +0 ft between room H-0116B (MC1 - C3/C5 airlock) and room H-0117 (Melter Cave No 1), and between Rooms H-0105B (MC2 - C3/C5 airlock) and room H-0106 (Melter Cave No 2). The C5 shield door, normally closed, is opened to allow a clear path for the import/export of the melter between Room H-0116B and H-0117 and between H-0105B and H-0106. When in the closed position, the C5 shield door provides for radiological shielding and personnel exclusion from the high radiation and radioactive contamination environment present in Room H-0117

and H-0106 (ALARA). Opening of the door will be controlled through administrative controls ensuring worker protection. The C5 shield door is also part of the ventilation system design approach to use cascading ventilation to support confinement. The C5 shield door interfaces with the adjacent embed liner to achieve an engineered air gap for proper system flow balance and flow velocity requirements. The doors dimensions are 211" wide, 196" high, by 8" thick steel plate, and weigh approximately 60 tons. When supporting the overpack closure shield door (40 tons approximate weight) the combined weight is approximately 100 tons. Similar to both the C2 containment doors and the C2/C3 shield doors, the C5 shield door is a single-slide, horizontally translating door, with supporting and guiding features, that has a door travel distance sufficient to ensure a clear opening to allow overpack access to the melter cave face (door travel of approximately 211 inches). The door is power operated by an electric motor driven lead screw that connect between the door and stationary portions of the drive system. The drive system is heavy-duty industrial type which operates the door open and closed at a travel speed of 20-28 inches per minute during nominal full-speed travel. Moving parts of the door drive system are guarded to protect personnel from injury. [3.5.1.4, 3.5.2.1]

The drive system has ramp-up/ramp-down speed control with position/speed feedback control. The drive system is capable of accurate positioning of the C5 shield door as required to support the melter overpack closure shield door handling function of the C5 shield door. The drive motor are a high-starting torque, reversible type, and are of sufficient power and torque output to move the door in either direction from any position at the required speed without exceeding the rated capacity. The drive system is provided with slipping clutch coupling(s) and/or torque limiter(s), to prevent stalling of the motor or damage to drive system components in the event of a malfunction. The mechanical overload devices are instrumented with trip switches or similar provisions to provide the control system with a signal that a malfunction has occurred.

Door interfaces with the C5 shield door embed liner for structural support and anchorage, and when in the fully closed position, the door interfaces with the adjacent encast liner to achieve a nominal 0.75 inch air gap. The air gap is capable of being adjusted from Room H-0116B & H-0105B, with the door installed, and in the fully closed position so as to affect an HVAC design airflow of approximately 2400 SCFM through the air gap. The air gap is adjustable in the range of 0.5 inch to 0.75 inch. [3.5.1.1]

The door includes remotely positionable hydraulic actuators features that allow the C5 shield door, when in the fully closed position, to receive, lift, and restrain the melter overpack closure shield door in order to remotely separate the overpack shield door (weight of approximately 40 tons) from the overpack (factory acceptance test and overpack door simulation removal test). These features also facilitate remote reengagement of the overpack shield door with the overpack container. The lifting features of the overpack closure shield door are designed such that following the lifting of the overpack closure shield door, the hydraulic jacking mechanisms (water-glycol), can be lowered (depressurized) to cause the overpack closure shield door to be supported and restrained by the rigid structures of the C5 Shield Door. The normal condition (long-term state) for the C5 Shield Door is to ensure adequate support and retention of the overpack closure shield door without pressurization of the hydraulic system. The hydraulic power packs HSH-MHAN-00015 (MC1) and HSH-MHAN-00067 (MC2) are part of the HSH system, and are located in corridor HC0104.

The door includes alignment features to allow accurate re-positioning of the door following overpack door retrieval and C5 door cycling operations, so as to allow remote replacement of the overpack door onto the overpack container without incurring damage to the overpack closure sealing interfaces. The door drive system incorporates a feature that allows for a shield door position "float" mode. This feature is required to allow the door to freely translate along the rails during placement of the melter overpack closure shield door during interfacing with the overpack structure. The "float" mode of operation does

not adversely affect the accuracy of, nor does it require "recalibration" of, any instrumentation (e.g. resolvers, or encoders) used to monitor absolute door position during normal door positioning.

Exterior surfaces of the shield door exposed to the melter cave environment are clad with stainless steel plate (cladding on melter cave side). The use of stainless steel facilitates the ease of decontamination (ALARA). Portions of the door that are impractical to clad are constructed from stainless steel to facilitate decontamination. The door includes interlock control features that interface with the MHJ system. These interlocks indicate door travel positions (open/closed), door locks actuated (door locked/unlocked in position) and position of locking actuators for overpack closure door (hydraulic cylinders extended or retracted).

If a door drive system fails, the through-wall recovery system provides the ability to close the door without requiring personnel to enter room H-0116B (MC1 – C3/C5 Airlock) or room H-0105B (MC2 – C3/C5 Airlock). It is possible to recover the door from any position of the door's travel path. Once the door is closed, maintenance personnel will be able to access Room H-0116B & Room H-0105B in order to perform repairs. Recovery rods are connected in series and extended through the recovery assembly until they reach and connect to the recovery rod socket mounted on the shield door. With the shield door remotely decoupled from the drive system attachment point, the door can then be pulled into the closed position. [3.5.4.1]

Figure 4-10: C5 Shield Door

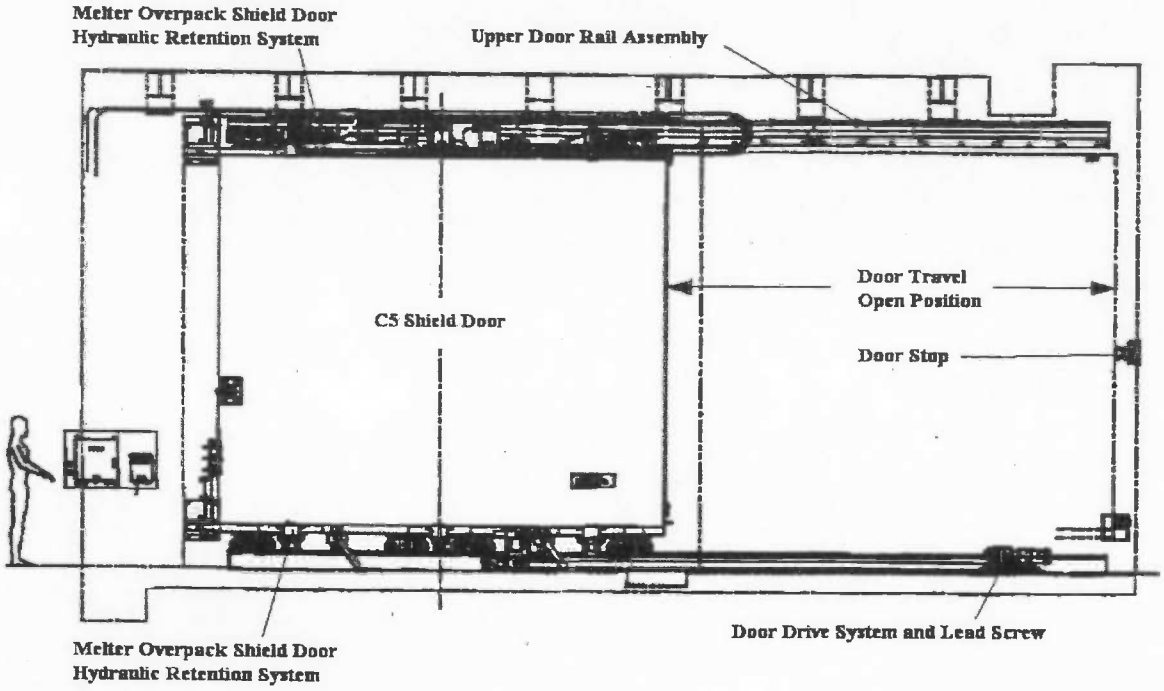

4.1.1.2.5 C5 Shield Door Fascia

Plant Item Numbers: *24590-HLW-MH-HMH-MHAN-00013 (MC1)*
24590-HLW-MH-HMH-MHAN-00021 (MC2)

Refer to: 24590-HLW-3PS-ADDH-T0001, *Engineering Specification for System HMH Shield Doors, Containment Doors and Melter Overpack.*

Refer to: 24590-HLW-M0-HMH-00003003 – *HLW Vitrification System HMH Design Proposal Drawing C5 Shield Door Fascia Detail Melter Handling.*

The C5 shield door fascia is classified Safety Significant (SS), seismic SC-III, to provide structural integrity.

The C5 shield door fascia is located in room H-0116B (MC1 – C3/C5 Airlock) and room H-0105B (MC2 – C3/C5 Airlock). The C5 shield door fascia consists of connected plate structures that extend from the floor to the ceiling, between the opposing walls of the C3/C5 airlock near the C5 shield door. The fascia is part of the ventilation system design approach to use cascading ventilation to support confinement. It interfaces with the melter overpack and concrete structure of Room H-0116B and Room H-0105B. The fascia is positioned to achieve an engineered air gap for air flow velocity requirements during overpack positioning at the C5 shield door. [3.5.1.1]

The fascia structure is primarily constructed from austenitic stainless steel plate. The structure interfaces with a 304" wide x 231" high "aperture" formed by the ceiling, floor, and walls of rooms H-0116B and H-0105B. The fascia structure has an opening of approximate dimensions 262" wide x 178.5" high, sized to accommodate the melter overpack, and is provided with two sliding doors with approximate dimensions of 40" wide x 180" high. Fascia weight is approximately 3 tons, including the sliding doors weighing approximately 1000 lb. each.

The predominant feature of the fascia is a large central opening, sized to accommodate the passage of the melter overpack. The fascia opening is provided with two horizontally sliding (or similar) adjustable access doors. The doors are adjustable as required to achieve a nominal 0.75 inch gap between the edge of the sliding door panel and the melter overpack. Additional panels along the top and bottom edges of the opening are also capable of being adjusted for proper flow balancing. The doors and panels are manually adjustable. See Figure 4-11. [3.5.1.1]

Figure 4-11: C5 Shield Door Fascia

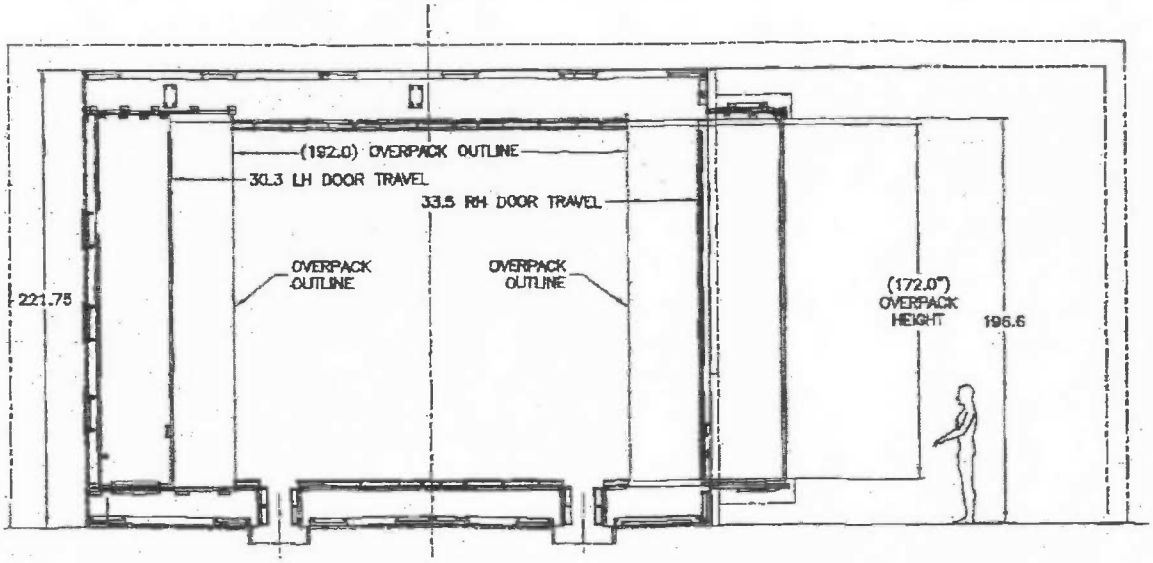

4.1.1.2.6 Through Wall Plugs

Plant Item Numbers: 30-PLUG-00072 (MC1)
30-PLUG-00167 (MC1)
30-PLUG-00172 (MC1)
30-PLUG-00073 (MC2)
30-PLUG-00173 (MC2)
30-PLUG-00174 (MC2)

Refer to: 24590-WTP-3PS-MX00-T0003, *Engineering Specification for QL Through-wall Devices.*

The through wall plugs are SC/SC-I, having a safety function to remain in place during and after a seismic DBE so as not to create a 6" or greater diameter (equivalent) opening in the C5 boundary.

The through wall plugs provide for expansion of additional tools for use during the plant's 40 year design life.

4.1.2 Boundaries and Interfaces

4.1.2.1 Melter Assembly Pad

Directly to the south of the MAP are the HLW Vitrification Facility exterior wall and 2 architectural roll-up doors where the melter transport bogies run through. The MAP has embedded rails traversing North-South to support the melter transport bogie and a set running East-West to support the MAP staging cart. These rails sit on embedded plates within the MAP.

To the north of the MAP is the melter lift system (HMH-LIFT-00001). The lift system is positioned at the melter transport bogie docking location, and is used to lift the melter overpack clear of the transport vehicle.

4.1.2.2 Melter Transport Bogie System

The melter transport bogie is designed to run on the rails from the docking location, across the MAP through the architectural exterior doors, the C2 Containment Door, C2/C3 Shield Door, and up to the opened C3/C5 shield door. As this bogie is electrically powered from the facility, the bogie will connect to power points within each of the areas the bogie runs through. One connection is not feasible since the bogie runs through separated containment and radiological areas. There will be an electrical connection point within the C3/C5 containment area, C3/C5 airlock, the C2/C3 airlock, the H0104 corridor, and also on the MAP.

4.1.2.3 Architectural Roll-Up Doors

The architectural roll-up doors are located on the exterior of the North wall of the HLW Vitrification Facility, between the MAP and H0104 corridor. The doors are powered from electrical system LVE.

4.1.2.4 C2 Containment Doors

The C2 Containment Door provides a portion of the C5 confinement boundary for the HLW Ventilation System. The C2 Containment Door is located on elevation +0 ft of the HLW Vitrification Facility, between Room HC104 (Corridor) and Room H-116A (Melter Cave No 1 – C2/C3 Airlock) and Room H-0105A (Melter Cave No 2 – C2/C3 Airlock). The C2 Containment Door, normally closed and sealed, is opened to allow a clear path for the passage of the HLW Melter Overpack into and out of Room H-116A (Melter Cave No 1) and out of Room H-0105A (Melter Cave No 2). When closed and in the sealed position, the C2 Containment Door provides a Safety Design Class (SDC) sealed boundary between Room HC104 and H-116A for Melter Cave No 1 and Room H-0105A for Melter Cave No 2.

Door interfaces with, and utilizes for structural support/anchorage, the C2 Containment Door Embed Liner (Ref. Drawing 24590-HLW-M0-HMH-00001004)

The C2 Containment door includes seismic clamp features, engaged when the door is in the fully closed and sealed configuration, to maintain the sealing function of the door following a design basis earthquake. Seismic clamps ensure that the sealing function is substantially unaffected by a design basis earthquake. The clamps may be remotely or manually engaged. If manually engaged, the restraint actuating mechanism(s) is accessible from the floor level, and is adequately interlocked with the door drive system.

The C2 Containment door drive motor system is powered by electrical system LVE.

4.1.2.5 C2/C3 Shield Doors

The System HMH C2/C3 Shield Door is located on elevation +0 ft of the HLW Vitrification Facility, between Room H-116A (Melter Cave No 1 – C2/C3 Airlock) and Room H-116B (Melter Cave No 1 – C3/C5 Airlock) and between Room H-0105A (Melter Cave No 2 – C2/C3 Airlock) and Room H-0105B (Melter Cave No 2 – C3/C5 Airlock).

When in the fully closed position, the door interfaces with the adjacent liner to achieve a nominal 0.75 inch air gap. The air gap is capable of being adjusted from Room H-116A (Melter Cave No 1) and Room H-0105A (Melter Cave No 2), with the door installed, and in the fully closed position so as to affect an HVAC design airflow through the air gap. The air gap is adjustable in the range of 0.5 inch to .75 inch gap. [3.5.1.1]

The C2/C3 Shield Door is also part of the HLW Ventilation System design approach to use cascading ventilation to support confinement. The C2/C3 Shield door interfaces with the adjacent embed liner to achieve an engineered air gap for proper system flow balance and air gap flow velocity requirements.

The C2/C3 Shield Door interfaces with, and utilizes for structural support/anchorage, the C2/C3 Shield Door Embed Liner (Ref. Drawing 24590-HLW-M0-HMH-00002003) and the concrete embedded items (Ref. Drawing 24590-HLW-M0K-HMH-00003004).

The C2/C3 Shield door drive motor system is powered by electrical system LVE.

4.1.2.6 C5 Shield Doors

The System HMH C5 Shield Door is located on elevation +0 ft of the HLW Vitrification Facility, between Room H-116B (Melter Cave No 1 – C3/C5 Airlock) and Room H-117 (Melter Cave No 1) and between Room H-0105B (Melter Cave No2 – C3/C5 Airlock) and Room H-0106 (Melter Cave No 2). The C5 Shield Door, normally closed, is opened to allow a clear path for the import/export of the HLW Melter into and out of Room H-117 (Melter Cave No 1) or Room H-0106 (Melter Cave No 2). When in the closed position, the C5 Shield Door provides radiological shielding and personnel exclusion from the high radiation and radioactive contamination environment present in Room H-117 (Melter Cave No 1) and Room H-0106 (Melter Cave No 2).

The C5 Shield Door incorporates a remote handling system that interfaces with the HLW Melter Overpack to provide the means to remove and replace the HLW Melter Overpack closure shield door (weighing approximately 40 tons) to facilitate HLW Melter import/export operations.

The C5 Shield Door is also part of the HLW Ventilation System design approach to use cascading ventilation to support confinement. The C5 Shield door interfaces with the adjacent embed liner to achieve an engineered air gap for proper system flow balance and air gap flow velocity requirements. [3.5.1.1]

The C5 Shield door drive motor system is powered by electrical system LVE.

4.1.2.7 C5 Shield Door Fascia

The C5 Shield Door Fascia is located in the HLW Vitrification Facility, in Room H-116B (Melter Cave No 1 – C3/C5 Airlock) and Room H-0106B (Melter Cave No 2 – C3/C5 Airlock). The C5 Shield Door Fascia consists of connected plate structures that extend from the floor to the ceiling, between the opposing walls of the C3/C5 Airlock near the C5 Shield Door.

The Fascia is part of the HLW Ventilation System design approach to use cascading ventilation to support confinement. The Fascia interfaces with the HLW Melter Overpack and concrete structure of Room H-116B and Room H-0106B to achieve an engineered air gap for proper system flow balance and air gap flow velocity requirements during HLW Melter Overpack positioning at the C5 Shield Door.

The predominant feature of the Fascia is a large central opening, sized to accommodate the passage of the HLW Melter Overpack. The Fascia opening is provided with two horizontally sliding (or similar) adjustable access doors. The doors are adjustable as required to achieve a nominal 0.75 inch gap between the edge of the sliding door panel and the HLW Melter Overpack. Additional panels along the top and bottom edges of the opening are also capable of being adjusted for proper flow balancing. The doors and panels are manually adjustable. [3.5.1.1]

4.1.2.8 Through Wall Plugs

Each of the through wall plugs is installed within and interface with a corresponding wall liner. The liners are designed as SC/SC-I to prevent failure of the wall such that there is more than a 6" opening of the wall after a design basis seismic event.

4.1.3 Physical Layout and Location

4.1.3.1 Melter Assembly Pad

The melter assembly pad projects 72'-0" north of the facility, and spans 140'-0" east to west, and is located on elevation +0 ft. The primary purpose of the MAP is to facilitate the import and export of melters to melter cave 1 (H-0117), and melter cave 2 (H-0106). The melter staging cart (HMH-MHAN-00048) runs east/west on the melter staging cart rails (HMH-RAIL-00012). The staging cart provides a platform for the assembly of new melters prior to import to the melter caves. The melter transport bogie (HMH-MHAN-00047) runs north/south on the melter assembly pad rails, (HMH-RAIL-00009, MC1 and HMH-RAIL-00008, MC2). When the MAP rails are not in use, they are fitted with cover plates that provide the rails protection from the environment and a safe level surface for personnel when working in the area.

The melter staging cart and melter transport bogie will be transported to the MAP when required, and will be set in place on the MAP rails using a temporary crane. The MAP is supplied with embed plates that allow the attachment of rail stops to prevent the bogies from impacting the doors, and driving off the north end of the MAP. Embed plates to the east and west end of the staging cart rails provide locations for mounting the staging cart winch, that provides movement either east or west to the meter cave 1 or 2 rail systems. The MAP provides power to the melter transport bogie that allows powered movement of the bogie north and south on the pad. The MAP power is removed from the bogie prior to moving south into the C2 corridor (HC0104), and re-connected to the power supply from the C2 corridor.

Note, for import of the initial melters (MC1 and MC2): For assembly and import of the initial melter during cold commissioning, the melter staging cart will not be available. A temporary support trellis will be located in-line with the melter assembly pad rails (either MC1 or MC2) to support the assembled melter. The melter will be transferred to the melter transport bogie using the melter support base winch. Once the melter is located on the melter transport bogie, the support trellis will be moved from the transport bogie rails to allow passage of the transport bogie.

The melter overpack is a large shielded and sealed enclosure, used for storage and transport of the melter. Final assembly of the melter is performed on the melter staging cart (located on the MAP), the melter overpack is delivered fully assembled to the melter transport bogie. A temporary crane removes the overpack closure shield door. The melter staging cart transfers the melter to align with the overpack located on the melter transport bogie. When the wheels on the melter are aligned with the rails in the overpack, an integral winch attached to the back of the over pack is attached to the melter, and pulls the melter into the overpack and secures it in place. The overpack closure shield door can now be reinstalled using the temporary crane. The overpack winching system is also used to remotely retrieve spent melters from the melter caves.

To the north of the MAP is the melter lift system (HMH-LIFT-00001). The lift system is positioned at the melter transport bogie docking location, and is used to lift the melter overpack clear of the transport vehicle. With the transport vehicle rails leveled and aligned with either melter cave 1 or 2 rail system,

and secured in place, the melter transport bogie is moved north, onto the melter transport vehicle and positioned under the melter overpack. The overpack may now be lowered and secured to the bogie. The bogie can now be moved south onto the MAP. See Figure 4-12.

Figure 4-12: Melter Assembly Pad

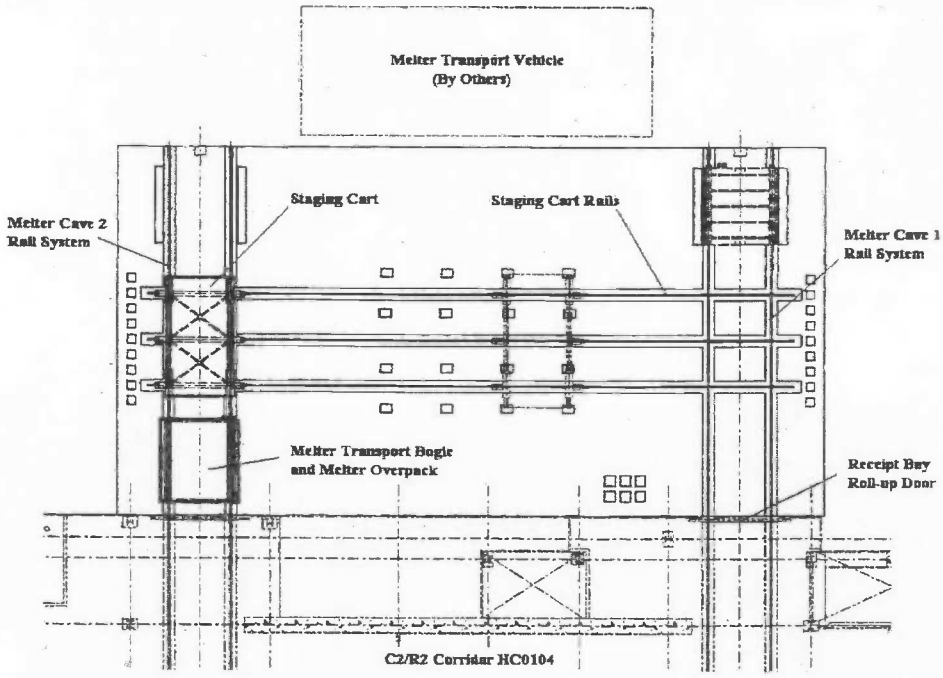

4.1.3.2 C2 Corridor (C0104)

Corridor HC0104 is to the south of the MAP and inside the HLW Vitrification Building, and runs east to west at elevation +0 ft. The corridor is separated from the MAP by two architectural roll-up doors, receipt bay door HMH-DOOR-00011 (for MC1 rail system), and receipt bay door HMH-DOOR-00012 (for MC2 rail system). Melter airlock rails HMH-RAIL-00006 (MC2) and HMH-RAIL-00003 (MC1) run north to south from the roll-up doors, across the corridor, through the C2/C3 and C3/C5 airlocks to terminate at the melter cave C5 shield doors. When the airlock rails are not in use, they are fitted with cover plates that protect the rails, and provide a safe level surface for personnel when working in the area.

The C2 corridor is equipped with embed plates that allow the attachment of rail stops that prevent the bogie from impacting the receipt bay doors and the C2 containment doors. The C2 containment doors, HMH-DOOR-00008 (MC1), and HMH-DOOR-00013 (MC2) are located on the south side of the corridor providing separation and containment of the C2/C3 airlocks. The C2 corridor provides power to the melter transport bogie that allows powered movement from the MAP, moving south into the C2 corridor (HC0104). When the receipt bay doors are closed, the C2 containment doors may be opened allowing movement of the transport bogie into the C2/C3 airlock.

4.1.3.3 C2/C3 Airlock (H-0116A Melter Cave 1, H-0105A Melter Cave 2)

The C2/C3 airlocks are located south of the C2 corridor on elevation +0 ft. The C2/C3 airlocks are separated from the C2 corridor by C2 containment doors, HMH-DOOR-00008 (MC1) and HMH-DOOR-

00013 (MC2) to the north, and by the C2/C3 shield doors HMH-DOOR-00009 (MC1) and HMH-DOOR-00014 (MC2) to the south. Continuation of melter airlock rails HMH-RAIL-00003 (MC1) and HMH-RAIL-00006 (MC2) run south from the C2 corridor, through the C2/C3 airlock into the C3/C5 airlock. Access to the C2/C3 airlock is made via subchange H-0116 (MC1) or subchange H-0105 (MC2). Access between the sub-change and airlock is via a non locking architectural door which will not prevent egress from the airlock in the event of a fire or other emergency related incidents.

Similar to the C2 corridor, the C2/C3 airlock is equipped with embed plates that allow the attachment of rail stops that prevent the bogie from impacting either the C2 containment doors or the C2/C3 shield doors. Again, when the airlock rails are not in use, they are fitted with cover plates that protect the rails, and provide a safe level surface for personnel when working in the area. The C2 containment doors are sealed to provide containment of potential contamination to the C2 corridor. The C2/C3 shield doors when closed, provide both shielding and contamination control, cascading air flow to the C3/C5 airlock via engineered air gaps around the door. The airlock is classified as C3 when the C2/C3 shield door is open to the C3/C5 airlock.

Stairs in the C2/C3 airlock give access to maintenance areas H-0309 (MC1), and H-0303 (MC2), and their associated platforms HP0309AA (MC1), and HP0303AA (MC2), at elevation +7 ft 8 in. The stairs are located on the west wall of the airlocks. When melter import/export activities are to be performed, the stairs require removal as they protrude into the path of the melter and overpack. Sumps HMH-SUMP-00001 (MC1) and HMH-SUMP-00004 (MC2) are located in the south east corners of the air locks, and are serviced by the RLD system to remove decontamination liquid waste from the areas when required.

4.1.3.4 C3/C5 Airlock (H-0116B Melter Cave 1, H-0105B Melter Cave 2)

The C3/C5/R3/R5 airlocks are located south of the C2/C3 airlocks on elevation +0 ft. The C3/C5 airlocks are separated from the C2/C3 airlocks by the C2/C3 shield doors HMH-DOOR-00009 (MC1) and HMH-DOOR-00014 (MC2) to the north. The C3/C5 airlocks are separated from melter caves 1 and 2 by the C5 shield doors HMH-DOOR-00010 (MC1) and HMH-DOOR-00015 (MC2) to the south. The airlocks are classified as C3/R3 when the C5 shield doors are closed, providing shielding and contamination control, cascading air flow to the melter cave via engineered air gaps around the door. When the C5 shield doors are open to the melter cave, the area is classified C5/R5. To aid in decontamination of the airlock or equipment, for example washdown, carbon dioxide, high pressure water or steam, the floor and walls are coated with a decontaminable epoxy novolac finish.

Melter airlock rails HMH-RAIL-00003 (MC1) and HMH-RAIL-00006 (MC2) terminate at the south end of the C3/C5 airlock in front of the C5 shield doors. The C3/C5 airlock is equipped with embed plates that allow the attachment of rail stops that prevent the bogie from impacting either the C2/C3 shield doors or the C5 shield doors. The C3/C5 airlock provides power to the melter transport bogie that allows powered movement from the C2/C3 airlock, moving south into the C3/C5 airlock. Again, when the airlock rails are not in use, they are fitted with cover plates that protect the rails, and provide a safe level surface for personnel when working in the area.

Personnel access to the C3/C5 airlock can only be made from the C2/C3 airlock when the C2/C3 shield door is open. When the melter transport bogie and melter overpack are located in the C3/C5 airlock, the melter overpack will be prepared for melter transfer, or failed melter for retrieval. Personnel remove the melter overpack door front bolts and store appropriately. The operator advances the overpack to the C5 shield door interface position then removes the melter overpack door rear bolts. The operator then positions the shield door fascia (HMH-MHAN-00013 for MC1, HMH-MHAN-00021 for MC2), around

the overpacks exterior surface to maintain cascading ventilation to the melter cave when the C5 shield door is opened.

The C5 shield door interface, the C5 shield door, when in the closed position, provides radiological shielding to protect personnel from the high radiation levels inside the melter cave (for both MC1, or MC2). The melter overpack interfaces with the C5 shield door such that the C5 shield door is capable of remotely handling and removing the melter overpack closure shield door. After the C5 shield door has engaged the melter overpack closure shield door, the C5 shield door, with the melter overpack closure shield door "attached," is opened to allow importing of the melter from inside the Melter Overpack into the melter cave. During import of a new or replacement melter into the melter cave, it is necessary for the overpack winch to provide dynamic controlled braking to the melter to provide better control of melter movement. See Figure 4-13.

Figure 4-13: C5 Shield Door and Melter Overpack Interface

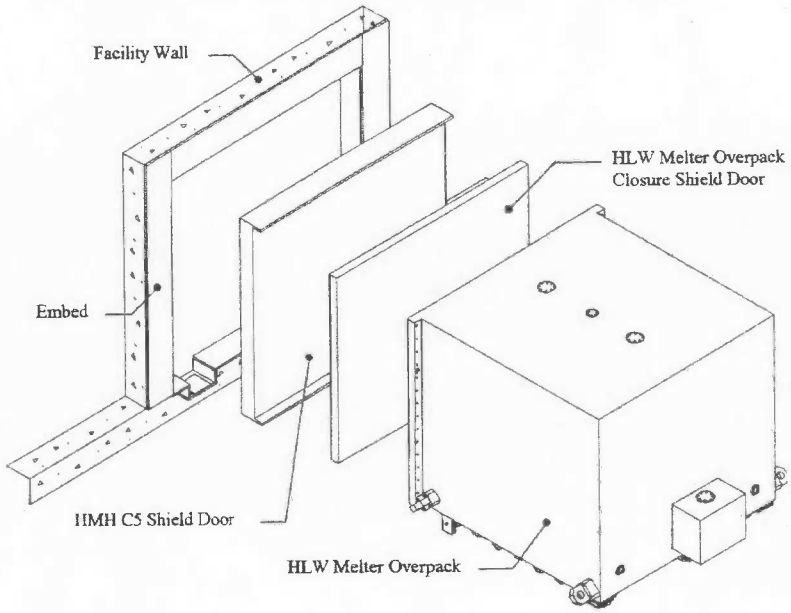

4.1.4 Principles of Operation

The HMH system consists of all items associated with the import of new melters and the export of failed/spent radioactive melters, process vessels and other large equipment from the HLW Facility. In-cave operations (transfer of a melter from the overpack with the C5 door open) are performed using remote control equipment, and shielded areas provide personnel access for inspection and maintenance activities. Where achievable, through wall drives such as the C5 door recovery equipment and hydraulic power packs (HSH system supplied) are used, placing maintainable items such as motors and gearboxes out-cave allowing hands on maintenance activities.

The system HMH melter transport bogie system supports the primary function of safely installing/removing the HLW melters in the HLW Facility. The initial HLW melter is assembled on the melter staging cart. The melter transport bogie transports the melter to the melter import/export location, by way of a railed track, located within the HLW Facility.

Following approximately 5 years of service, the HLW Melter is expected to reach the end of useful service life, requiring retrieval of the spent melter by system HMH equipment. Once the melter overpack is installed on the melter transport bogie, it will enter the facility and remove the spent melter. The melter transport bogie exits the facility to the MAP. The melter overpack containing the spent melter is removed from the melter transport bogie and set aside for processing.

Additional discussion of system operations is provided in Section 4.2

4.1.5 System Reliability Features

Reserved

4.1.6 System Control Features

4.1.6.1 Melter Transport Bogie System

4.1.6.1.1 System Monitoring

The melter transport bogie system has a simple monitoring system to indicate Red for stopped, Green for running or Red for motor tripped. This allows a local operator to quickly see if the system is operational. Each of the motors on the bogie system is controlled via a dedicated ASD (Adjustable Speed Drive) for each drive motor. These ASDs contain all required logic and interlocks needed for the bogie system to operate properly. If a drive malfunctions and a power reset does not adequately clear the error, then the appropriate local ASD display will allow the operator to see errors and change parameters to ensure proper operation of the drives.

4.1.6.1.2 Control Capability and Locations

The bogie system incorporates the following control capabilities:

- A single Local/Remote selector switch
- Overload reset pushbutton
- Indicator lights (Red for stopped, Green for running, Red for motor tripped). These always function regardless of which mode the equipment is operating in.
- All indicator lights the push to test type such that the light illuminates when the cover is depressed.
- An Open/Stop/Close spring-centered switch that defaults to the center/stop position when released. This switch becomes active when the Local/Remote switch is placed in the Local position. Twisting and holding the switch in one direction jogs the bogie forward. Twisting and holding it in the opposite direction jogs the bogie in reverse. When released, the switch automatically returns to the center/stop position, stopping the bogie.
- An emergency stop, push/pull button that operates independent of any software or electronic control logic. When depressed, the emergency stop button disables bogie operation. Bogie operation remains disabled until the button is pulled back out and the reset button is depressed.

A remote control pendant has direct manual operation of the bogie/overpack winch, with a limited number of functions. These functions include the following:

- Emergency stop
- Bogie travel forward

- Bogie travel reverse
- Indication that bogie has reached C5 door
- Indication that bogie has moved back from C5 door after overpack door has been removed and C5 door ready to open
- Indication that bogie has traveled forward to Melter Cave
- Winch braking
- Winch spool out
- Winch spool in

The local bogie/overpack winch control cabinet provides the following functions:

- Emergency stop
- Bogie travel forward
- Bogie travel reverse
- Indication that bogie has reached C5 door
- Indication that bogie has moved back from C5 door after overpack door has been removed and C5 door ready to open
- Indication that bogie has traveled forward to Melter Cave
- Winch braking
- Winch spool out
- Winch spool in

Flux vector ASDs have the capability of being configured via an integrated keypad mounted inside the main control panel.

4.1.6.1.3 Automatic and Manual Actions

Due to the nature of the bogie system, all actions are manual, either locally controlled or remotely controlled via the pendant.

4.1.6.1.4 Setpoints and Ranges

All setpoints and parameters for the motors and limit switches are setup at installation and are not intended to be changed throughout the life of the bogie system. A full list of parameters is included in the O&M manual for the bogie transport system for future reference.

4.1.6.1.5 Interlocks, Bypasses, and Permissives

The only interlocks for the bogie transport system are the travel limit switches to ensure the overpack does not impact a facility door, as shown in more detail within the O&M manual.

4.1.6.2 Architectural Roll-Up Doors (HMH-DOOR-00011 and HMH-DOOR-00012)

4.1.6.2.1 System Monitoring

Refer to the O&M manual for detailed information regarding the system monitoring of the roll-up doors.

4.1.6.2.2 Control Capability and Locations

All control for the architectural roll-up doors are locally installed in proximity to the doors.

4.1.6.2.3 Automatic and Manual Actions

Due to the nature of the HMH System, all actions for the architectural doors are manual, locally controlled by operator action.

4.1.6.2.4 Setpoints and Ranges

The architectural roll-up doors are equipped with open, close, and proximity limit switches. These switches are setup at installation to ensure the door operates properly and are not intended to be adjusted during the life of the facility. Refer to the O&M manual for further information regarding adjusting the limit switches.

4.1.6.2.5 Interlocks, Bypasses, and Permissives

Both architectural doors are interlocked to both C2 Containment doors, such that if either C2 containment door is opened, neither architectural door is permitted to open. On close command, a proximity switch is installed to detect personnel or other obstructions to reverse the door action and keep the door open. This ensures the door does not close down on operators or damage equipment. The following Table 4-1 shows the interlock relationship between both architectural roll-up doors and the 2 C2 Containment doors and the personnel safety switches:

Table 4-1: Roll-Up Doors Interlocks

Plant Item No.	Equipment	Action	Interlocked Plant Tag Number	Description	State Required for door action requested
HMH-DOOR-00011	Receipt Bay Roll-Up Door (MC1)	Open	HMH-ZS-0402	C2 Containment Door (MC1)	Closed
			HMH-ZS-0404		Lock
			HMH-ZS-0406		In
			HMH-ZS-1202	C2 Containment Door (MC2)	Closed
			HMH-ZS-1204		Lock
			HMH-ZS-1206		In
		Close	HMH-XE-0204	Personnel Safety	Healthy
HMH-DOOR-00012	Receipt Bay Roll-Up Door (MC2)	Open	HMH-ZS-1202	C2 Containment Door (MC2)	Closed
			HMH-ZS-1204		Lock
			HMH-ZS-1206		In
			HMH-ZS-0402	C2 Containment Door (MC1)	Closed
			HMH-ZS-0404		Lock
			HMH-ZS-0406		In
		Close	HMH-XE-1004	Personnel Safety	Healthy

4.1.6.3 C2 Containment Doors (HMH-DOOR-00008 and HMH-DOOR-00013)

4.1.6.3.1 System Monitoring

Refer to O&M manual 24590-QL-POA-ADDH-00009-01-00009 for details regarding the system monitoring of the C2 Containment Doors.

4.1.6.3.2 Control Capability and Locations

All control for the C2 Containment doors are locally installed in proximity to the doors.

4.1.6.3.3 Automatic and Manual Actions

Due to the nature of the HMH System, all actions for the C2 Containment doors are manual, locally controlled by operator action.

4.1.6.3.4 Setpoints and Ranges

The C2 Containment doors are equipped with open, close, and proximity limit switches. These switches are setup at installation to ensure the door operates properly and are not intended to be adjusted during the life of the facility. Refer to O&M Manual 24590-QL-POA-ADDH-00009-01-00009 for further information regarding adjusting the limit switches.

4.1.6.3.5 Interlocks, Bypasses, and Permissives

Both C2 Containment doors are interlocked to both Architectural doors and their respective C2/C3 Shield Door, such that if either Architectural door is opened or the corresponding C2/C3 Shield door is not closed, the C2 Containment door is not permitted to open. On close command, a proximity switch is installed to detect personnel or other obstructions to reverse the door action and keep the door open. This ensures the door does not close on operators or damage equipment. The following Table 4-2 shows the interlock relationship between both C2 Containment doors and the 2 C2/C3 Shield doors and the personnel safety switches.

Table 4-2: C2 Containment Doors Interlocks

Plant Item No.	Equipment	Action	Interlocked Plant Tag Number	Description	State Required for door action requested
HMH-DOOR-00008	C2 Containment Door (MC1)	Open	HMH-ZS-0203	Receipt Bay Roll-Up Door (MC1)	Closed
			HMH-ZS-1003	Receipt Bay Roll-Up Door (MC2)	Closed
			HMH-ZS-0603	C2/C3 Shield Door (MC1)	Closed
			HMH-YY-0602		Locked
			HMH-ZS-0407	C2 Containment Door (MC1)	Out
		Close	HMH-ZS-0407	C2 Containment Door (MC1)	Out
			HMH-XE-0408	Personnel Safety (MC1)	Healthy
			HMH-ZS-0402	C2 Containment Door (MC1)	Closed
HMH-DOOR-00013	C2 Containment Door (MC2)	Open	HMH-ZS-0203	Receipt Bay Roll-Up Door (MC1)	Closed
			HMH-ZS-1003	Receipt Bay Roll-Up	Closed

Plant Item No.	Equipment	Action	Interlocked Plant Tag Number	Description	State Required for door action requested
				Door (MC2)	
			HMH-ZS-1403	C2/C3 Shield Door (MC2)	Closed
			HMH-YY-1402		Locked
			HMH-ZS-1207	C2 Containment Door (MC2)	Out
		Close	HMH-ZS-1207	C2 Containment Door (MC2)	Out
			HMH-XE-1208	Personnel Safety (MC2)	Healthy
			HMH-ZS-1202	C2 Containment Door (MC2)	Closed

4.1.6.4 C2/C3 Shield Door (HMH-DOOR-00009 and HMH-DOOR-00014)

4.1.6.4.1 System Monitoring

Refer to the O&M manual for details regarding the system monitoring of the C2/C3 Shield Doors.

4.1.6.4.2 Control Capability and Locations

All control for the C2/C3 Shield doors are locally installed in proximity to the doors.

4.1.6.4.3 Automatic and Manual Actions

Due to the nature of the HMH System, all actions for the C2/C3 Shield doors are manual, locally controlled by operator action.

4.1.6.4.4 Setpoints and Ranges

The C2/C3 Shield doors are equipped with open, close, and proximity limit switches. These switches are setup at installation to ensure the door operates properly and are not intended to be adjusted during the life of the facility. Refer to the O&M Manual for further information regarding adjusting the limit switches.

4.1.6.4.5 Interlocks, Bypasses, and Permissives

Both C2/C3 Shield doors are interlocked to their respective C2/C3 Shield Door, C5 Shield Door, 2 Gamma Interlock Monitors, Shield Lid for Decontamination Pit, and personnel safety proximity, such that if the corresponding C2/C3 Containment door is not closed, the C5 Shield door is not closed, the Gamma monitor is indicating high gamma radiation, or if a high radiation source is present in the decontamination pit, the C2/C3 Shield door is not permitted to open. On close command, a proximity switch is installed to detect personnel or other obstructions to reverse the door action and keep the door open. This ensures the door does not close on operators or damage equipment. The following **Table 4-3** shows the interlock relationships between the C2/C3 Shield doors, their respective C2 Shield door and the associated personnel safety interlocks:

Table 4-3: C2/C3 Shield Doors Interlocks

Plant Item No.	Equipment	Action	Interlocked Plant Tag Number	Description	State Required for door action requested

HMH-DOOR-00009	C2/C3 Shield Door (MC1)	Open	HMH-ZS-0402	C2 Containment Door (MC1)	Closed
			HMH-ZS-0404		Locked
			HMH-ZS-0406		In
			HMH-ZS-0303	C5 Shield Door (MC1)	Closed
			HMH-YY-0309		Lock
			HMH-RS-1601	Gamma Interlock Monitor in C3/C5 Airlock	Not High
			HMH-RS-1602		Not High
			HSH-RS-2501	Gamma Interlock Monitor in Melter Cave Decontamination Pit (MC1)	Not High
			HSH-RS-2901		Not High
		Close	HMH-XE-0605	Personnel Safety	Healthy
		Lock	HMH-ZS-0603	C2/C3 Shield Door (MC1)	Closed
HMH-DOOR-00014	C2/C3 Shield Door (MC2)	Open	HMH-ZS-1202	C2 Containment Door (MC2)	Closed
			HMH-ZS-1204		Lock
			HMH-ZS-1206		In
			HMH-ZS-1103	C5 Shield Door (MC2)	Closed
			HMH-YY-1109		Lock
			HMH-RS-1701	Gamma Interlock Monitor in C3/C5 Airlock	Not High
			HMH-RS-1702		Not High
			HSH-RS-4401	Gamma Interlock Monitor in Melter Cave Decontamination Pit (MC2)	Not High
			HSH-RS-4301		Not High
			HMH-XE-1405	Personnel Safety (MC2)	Healthy
			HMH-ZS-1403	C2/C3 Shield Door	Closed

4.1.6.5 C5 Shield Door (HMH-DOOR-00010 and HMH-DOOR-00015)

4.1.6.5.1 System Monitoring

Refer to O&M manual 24590-QL-POA-ADDH-00009-01-00008 for details regarding the system monitoring of the C5 Shield Door.

4.1.6.5.2 Control Capability and Locations

All control for the C5 Shield doors are locally installed in proximity to the doors.

4.1.6.5.3 Automatic and Manual Actions

Due to the nature of the HMH System, all actions for the C5 Shield doors are manual, locally controlled by operator action.

4.1.6.5.4 Setpoints and Ranges

The C5 Shield doors are equipped with open, close, and proximity limit switches. These switches are setup at installation to ensure the door operates properly and are not intended to be adjusted during the life of the facility. Refer to O&M Manual 24590-QL-POA-ADDH-00009-01-00008 for further information regarding adjusting the limit switches.

4.1.6.5.5 Interlocks, Bypasses, and Permissives

Both C5 Shield doors are interlocked to their respective C2/C3 Shield Door, Overpack Interlock Monitors, and personnel safety proximity, such that if the corresponding C2/C3 Shield door is not closed, or if the overpack is not in its correct position, the C5 shield door is not permitted to open. On close command, a proximity switch is installed to detect personnel or other obstructions to reverse the door action and keep the door open. This ensures the door does not close on operators or damage equipment. The following Table 4-4 shows the interlock relationships between the C5 Shield doors, their respective overpack limit switches and the associated personnel safety interlocks:

Table 4-4: C5 Shield Doors Interlocks

Plant Item No.	Equipment	Action	Interlock Plant Tag Number	Description	Sate Required for door action requested
HMH-DOOR-00010	C5 Shield Door (MC1)				
	Upper Locking Cylinders	Extend	HMH-ZS-0603	C2/C3 Shield Door (MC1)	Closed
			HMH-YY-0602		Lock
			HMH-ZS-0303	C5 Shield Door (MC1)	Closed
			HMH-ZS-0808	Overpack Positioning Device	Posn 2
			HMH-YS-0322	Overpack Door	Present
			HMH-YS-0323		Present
	Lower Lifting Cylinders	Extend	HMH-ZS-0808	Overpack Positioning Device	Posn 2
			HMH-YS-0322	Overpack Door	Present
			HMH-YS-0323		Present
			HMH-ZS-0313	C5 Shield Door Locking Upper Cylinders	Extended
			HMH-ZS-0314		Extended

			HMH-ZS-0303	C5 Shield Door (MC1)	Closed
		Retract	HMH-ZS-0809	Overpack Positioning Device	Posn 3
			HMH-YS-0322	Overpack Door	Present
			HMH-YS-0323		Present
			HMH-ZS-0313	C5 Shield Door Locking Upper Cylinders	Extended
			HMH-ZS-0314		Extended
			HMH-ZS-0303	C5 Shield Door (MC1)	Closed
	Door Travel	Open	HMH-ZS-0809	Overpack Positioning Device	Posn 3
			HMH-YS-0322	Overpack Door	Present
			HMH-YS-0323		Present
			HMH-ZS-0313	C5 Shield Door Locking Upper Cylinders	Extended
			HMH-ZS-0314		Extended
			HMH-ZS-0316	C5 Shield Door Lower Lifting Cylinders	Retracted
			HMH-ZS-0317		Retracted
			HMH-ZS-0318		Retracted
			HMH-ZS-0811	Overpack Positioning Device	Posn 5
			HMH-ZS-0812		Posn 5
			HMH-ZS-0603	C2/C3 Shield Door (MC1)	Closed
			HMH-YY-0602		Lock
		Close	HMH-ZS-0809	Overpack Positioning Device	Posn 3
	Lower Lifting Cylinders	Extend	HMH-ZS-0809	Overpack Positioning Device	Posn 3
			HMH-YS-0322	Overpack Door	Present
			HMH-YS-0323		Present
			HMH-ZS-0313	C5 Shield Door Locking Upper Cylinders	Extended
			HMH-ZS-0314		Extended
			HMH-ZS-0303	C5 Shield Door (MC1)	Closed
		Retract	HMH-ZS-0808	Overpack Positioning Device	Posn 2
			HMH-YS-0322	Overpack Door	Present
			HMH-YS-0323		Present

			HMH-ZS-0313	C5 Shield Door Locking Upper Cylinders	Extended
			HMH-ZS-0314		Extended
			HMH-ZS-0303	C5 Shield Door (MC1)	Closed
	Upper Locking Cylinders	Retract	HMH-ZS-0808	Overpack Positioning Device	Posn 2
			HMH-YS-0322	Overpack Door	Preseent
			HMH-YS-0323		Present
			HMH-ZS-0303	C5 Shield Door (MC1)	Closed
	Brake	Disengage	NONE		
		Engage	NONE		

Plant Item No.	Equipment	Action	Interlock Plant Tag Number	Description	Sate Required for door action requested
HMH-DOOR-00015	C5 Shield Door (MC2)				
	Upper Locking Cylinders	Extend	HMH-ZS-1403	C2/C3 Shield Door (MC2)	Closed
			HMH-YY-1402		Lock
			HMH-ZS-1103	C5 Shield Door (MC2)	Closed
			HMH-ZS-0808	Overpack Positioning Device	Posn 2
			HMH-YS-1122	Overpack Door	Present
			HMH-YS-1123		Present
	Lower Lifting Cylinders	Extend	HMH-ZS-0808	Overpack Positioning Device	Posn 2
			HMH-YS-1122	Overpack Door	Present
			HMH-YS-1123		Present
			HMH-ZS-1113	C5 Shield Door Locking Upper Cylinders	Extended
			HMH-ZS-1114		Extended
			HMH-ZS-1103	C5 Shield Door (MC2)	Closed
		Retract	HMH-ZS-1103	C5 Shield Door (MC2)	Closed
			HMH-ZS-0809	Overpack Positioning Device	Posn 3
			HMH-YS-1122	Overpack Door	Present
			HMH-YS-1123		Present

			HMH-ZS-1113	C5 Shield Door Locking Upper Cylinders	Extended
			HMH-ZS-1114		Extended
	Door Travel	Open	HMH-ZS-0809	Overpack Positioning Device	Posn 3
			HMH-YS-1122	Overpack Door	Present
			HMH-YS-1123		Present
			HMH-ZS-1113	C5 Shield Door Locking Upper Cylinders	Extended
			HMH-ZS-1114		Extended
			HMH-ZS-1116	C5 Shield Door Lower Lifting Cylinders	Retracted
			HMH-ZS-1117		Retracted
			HMH-ZS-1118		Retracted
			HMH-ZS-1403	C2/C3 Shield Door (MC2)	Closed
			HMH-ZS-0811	Overpack Positioning Device	Posn 5
			HMH-ZS-0812		Posn 5
		Close	HMH-ZS-0809	Overpack Positioning Device	Posn 3
	Lower Lifting Cylinders	Extend	HMH-ZS-0809	Overpack Positioning Device	Posn
			HMH-YS-1122	Overpack Door	Present
			HMH-YS-1123		Present
			HMH-ZS-1113	C5 Shield Door Locking Upper Cylinders	Extended
			HMH-ZS-1114		Extended
			HMH-ZS-1103	C5 Shield Door (MC2)	Closed
		Retract	HMH-ZS-0808	Overpack Positioing Device	Posn 2
			HMH-YS-1122	Overpack Door	Present
			HMH-YS-1123		Present
			HMH-ZS-1113	C5 Shield Door Locking Upper Cylinders	Extended
			HMH-ZS-1114		Extended
			HMH-ZS-1103	C5 Shield Door (MC2)	Closed
	Upper Locking Cylinders	Retract	HMH-YS-1122	Overpack Positioning Device	Posn 2
			HMH-YS-1123	Overpack Door	Present
			HMH-YS-1123		Present

			HMH-ZS-1103	C5 Shield Door (MC2)	Closed
	Brake	Disengage	NONE		
		Engage	NONE		

4.2 Operations

Reserved

4.3 Testing and Maintenance

Reserved

4.4 Supplemental Information

Reserved

5 Sources, Bases, and Other References

5.1 Source / Basis References

Document Number	Rev	Title	Text Reference
24590-WTP-DB-ENG-01-001	2	Basis of Design	BOD
24590-WTP-RPT-OP-01-001	005	Operations Requirements Document	ORD
24590-WTP-PSAR-ESH-01-002-04	5D	Preliminary Documented Safety Analysis to Support Construction Authorization; HLW Facility Specific Information	PDSA - HLW Facility
24590-WTP-PSAR-ESH-01-002-01	5D	Preliminary Documented Safety Analysis to Support Construction Authorization; General Information	PDSA- General
24590-WTP-SRD-ESH-01-001-02	7C	Safety Requirements Document, Volume II	SRD
DE-AC27-01RV14136	M3339	DOE/BNI WTP Contract Mod No. 339, Section C - Statement of Work	WTP Contract
24590-HLW-PL-RT-07-0001	003	IHLW Waste Form Compliance Plan	IHLW Waste Form Compliance Plan
24590-WTP-ICD-MG-01-003	005	ICD 03 - Interface Control Document for Radioactive Solid Waste	ICD-03

5.2 Other References

Document Number	Rev	Title
24590-WTP-3DP-G04B-00004	003	Technical Requirements Management
24590-WTP-GPG-ENG-0161	000	Technical Requirements Management
24590-HLW-U0D-W16T-00001	001	HLW Room Environment Data Sheet
DOE-STD-1020-94	N/A	Natural Phenomena Hazards Design and Evaluation Criteria for Department of Energy Facilities
24590-WTP-M6-50-00008	003	P&ID Symbols and Legend (Sheet 8 of 8)
24590-WTP-GPP-SQP-208	003B	Plant Software Life Cycle Management
24590-WTP-3DP-G04B-00046	029	Engineering Drawings
24590-WTP-3PS-JQ00-T0004	001	Management of Supplier Software
24590-WTP-GPG-ENG-033	002	Evaluation for Seismic Interaction Effects

5.3 Design References

Document Number	Title
Mechanical Handling Diagrams	
24590-HLW-M7-HMH-00001001	MHD - HLW VITRIFICATION SYSTEM HMH MECHANICAL HANDLING DIAGRAM MELTER HANDLING MELTER CAVE 1
24590-HLW-M7-HMH-00001002	MHD - HLW VITRIFICATION SYSTEM HMH MECHANICAL HANDLING DIAGRAM MELTER HANDLING MELTER 1
24590-HLW-M7-HMH-00001003	MHD - HLW VITRIFICATION SYSTEM HMH MECHANICAL HANDLING DIAGRAM MELTER HANDLING MELTER 1
24590-HLW-M7-HMH-00002001	MHD - HLW VITRIFICATION SYSTEM HMH MECHANICAL HANDLING DIAGRAM MELTER HANDLING MELTER 2
24590-HLW-M7-HMH-00002002	MHD - HLW VITRIFICATION SYSTEM HMH MECHANICAL HANDLING DIAGRAM MELTER HANDLING 2
24590-HLW-M7-HMH-00002003	MHD - HLW VITRIFICATION SYSTEM HMH MECHANICAL HANDLING DIAGRAM MELTER HANDLING MELTER 2
24590-HLW-M1-HMH-00001	Mechanical Sequence Diagram (MSD) for HLW Vitrification System HMH Melter Handling (Melters 1 & 2)
General Arrangement /Equipment Location Drawings	
24590-HLW-P1-P01T-00002	HLW Vitrification Building General Arrangement Plan at EL 0'-0"
24590-HLW-P1-P01T-00009	HLW Vitrification Building General Arrangement Sections D-D, E-E & F-F
24590-HLW-P1-P23T-00103	HLW Vitrification Building Equipment Location Plan at EL 0-0" Area 103
24590-HLW-P1-P23T-00104	HLW Vitrification Building Equipment Location Plan at EL 0-0" Area 104
24590-HLW-P1-P23T-00105	HLW Vitrification Building Equipment Location Plan at EL 0-0" Area 105
24590-HLW-P1-P23T-00108	HLW Vitrification Building Equipment Location Plan at EL 0-0" Area 108
24590-HLW-P1-P23T-00109	HLW Vitrification Building Equipment Location Plan at EL 0-0" Area 109
24590-HLW-P1-P23T-00110	HLW Vitrification Building Equipment Location Plan at EL 0-0" Area 110

Appendix A - Test Objectives, Conditions, and Acceptance Criteria

NOTE: Demonstrations and Tests identified in this appendix are preliminary, pending completion of design activities. They are established to document the flowdown of verification needs established in Section 3 but are not sufficiently detailed for development of specific system and equipment test plans. They may be used for general planning only. This note is to be removed when design is sufficiently progressed to provide the details needed to establish the basis for testing and acceptance criteria.**[HOLD][24590-WTP-ATS-MGT-14-0590]**

Requirement Section No.	Test (T) or Demo (D)	SU or COM	Plan (Including SSCs)**	Acceptance Criteria (TAC or GTC)	Notes/Comments	Test Conditions
3.4.1.1	D	SU/COM	Demonstrate the ability for the lift system to lift a melter overpack, empty or loaded with a new or spent melter, off the transport bogie positioned on the Tank Operations Contractor transport vehicle and set a loaded overpack onto the Tank Operations Contractor transport vehicle.	(GTC) The melter lift system is shown to have the capability of lifting a melter overpack, empty or loaded with a new or spent melter off the transport bogie positioned on the Tank Operations Contractor vehicle and the melter lift system is shown to have the capability to set a loaded overpack onto the Tank Operations Contractor vehicle.		
3.4.3.1	D	SU/COM	Demonstrate system HSH has the capability to remotely extract or insert equipment out of or into the melter overpack.	(GTC) Equipment is moved between the melter cave and the melter overpack using HSH equipment.	An overpack may not be available for Startup or Commissioning to complete verification.	
3.4.4.2	D	SU/COM	Demonstrate the capability to stop equipment deemed to have a credible injury hazard with collocated emergency stops.	(GTC) When the emergency stop button is contacted the equipment will stop operating in a safe condition.		
3.4.4.4	D	SU/COM	Demonstrate the capability of the HMH provided spray lances in both the C2/C3 and C3/C5 airlocks to use facility pressure washer, to facilitate decontamination with pressurized warm water, detergent solution or steam.	(GTC) Spray lances receive facility pressure washer fluid to allow for decontamination of equipment.		
3.4.4.5	D	SU/COM	Demonstrate the capability to remotely monitor HMH functions in the facility control room through CCTV.	(GTC) Successfully show travel path of melter transport bogie from the C2/C3 airlock to the C3/C5 airlock.		PCJ operating and monitoring.
3.5.4.1	D	SU/COM	Demonstrate capability to recover of C5 shield door with melter overpack door. C5 shield doors: HMH-DOOR-00010 (melter cave 1) and HMH-DOOR-00015 (melter cave 2) Recovery Plugs: 30-PLUG-00072 (melter cave 1) and 30-PLUG-00073 (melter cave 2) Recovery device: HSH-RCVY-00006	(GTC) Successfully close the C5 shield doors using recovery devices.		Remotability The test starts with the door in the fully open position. Power to the door must be locked and tagged out prior to performing the recovery operation. A simulated weight for the melter overpack closure door is to be included.

Appendix A - Test Objectives, Conditions, and Acceptance Criteria

NOTE: Demonstrations and Tests identified in this appendix are preliminary, pending completion of design activities. They are established to document the flowdown of verification needs established in Section 3 but are not sufficiently detailed for development of specific system and equipment test plans. They may be used for general planning only. This note is to be removed when design is sufficiently progressed to provide the details needed to establish the basis for testing and acceptance criteria.[HOLD]] 24590-WTP-ATS-MGT-14-0590]

Requirement Section No.	Test (T) or Demo (D)	SU or COM	Plan (Including SSCs)**	Acceptance Criteria (TAC or GTC)*	Notes/Comments	Test Conditions
3.6.1.1	T	SU/COM	Load test the load path/rails with bogie and test weights equaling full melter and overpack.	(TAC) The load path/rails support the full test weight of a full melter and overpack.	This test may be performed concurrently with the demonstration for Requirement 3.6.1.2.1.	
3.6.1.2.1	D	SU/COM	The following test is dependent on the availability of the melter overpack, as it is not planned to be procured until it is required during hot operations and melter failure. Transfer melter overpack to the melter cave C5 shield door interface (for both melter cave 1 and melter cave 2).	(GTC) Move the melter overpack to the C2 corridor and confirm the melter transport bogie and melter overpack pass through the architectural roll-up receipt bay doors, HC0104A (MC1 rail system), and HC0104-1 (MC2 rail system) without contacting door framework.	An overpack may not be available for Startup or Commissioning to complete verification.	1) Melter transport bogie is positioned on melter assembly pad (MAP). The melter overpack is located on the melter transport bogie. The receipt rollup door is open. The melter bogie rail stops are installed.
3.6.1.2.1	D	SU/COM	The following test is dependent on the availability of the melter overpack, as it is not planned to be procured until it is required during hot operations and melter failure. Transfer melter overpack to the melter cave C5 shield door interface (for both melter cave 1 and melter cave 2).	(GTC) Move the melter overpack to the C2/C3 airlock and confirm the melter transport bogie and melter overpack pass through the C2 confinement doors, HMH0DOOR-00008 (MC1 rail system) and HMH-DOOR-00013 (MC2 rail system) without contacting the door framework.	An overpack may not be available for Startup or Commissioning to complete verification.	2) Melter overpack movement is a continuation from step 1. C2 containment door opened. • Melter bogie rail stops re-positioned and installed.
3.6.1.2.1	D	SU/COM	The following test is dependent on the availability of the melter overpack, as it is not planned to be procured until it is required during hot operations and melter failure. Transfer melter overpack to the melter cave C5 shield door interface (for both melter cave 1 and melter cave 2).	(GTC) Move the melter overpack to the C3/C5 airlock and confirm the melter transport bogie and melter overpack pass through the C2/C3 airlock doors, HMH-DOOR-00009 (MC1 rail system) and HMH-DOOR-00014 (MC2 rail system) without contacting the door framework.	An overpack may not be available for Startup or Commissioning to complete verification.	3) Melter overpack movement is a continuation from step 2. C2/C3 shield is open. • Melter bogie rail stops re-positioned and installed.

Appendix A - Test Objectives, Conditions, and Acceptance Criteria

NOTE: Demonstrations and Tests identified in this appendix are preliminary, pending completion of design activities. They are established to document the flowdown of verification needs established in Section 3 but are not sufficiently detailed for development of specific system and equipment test plans. They may be used for general planning only. This note is to be removed when design is sufficiently progressed to provide the details needed to establish the basis for testing and acceptance criteria.[HOLD][24590-WTP-ATS-MGT-14-0590]

Requirement Section No.	Test (T) or Demo (D)	SU or COM	Plan (Including SSCs)**	Acceptance Criteria (TAC or GTC)	Notes/Comments	Test Conditions
3.6.1.2.1	D	SU/COM	The following test is dependent on the availability of the melter overpack, as it is not planned to be procured until it is required during hot operations and melter failure Transfer melter overpack to the melter cave C5 shield door interface (for both melter cave 1 and melter cave 2).	(GTC) Move the melter overpack to interface with the C5 shield door. HMH-DOOR-00010 (MC1 rail system) and HMH-DOOR-00015 (MC2 rail system). Confirm the melter overpack door is retained by the C5 shield door.	An overpack may not be available for Startup or Commissioning to complete verification.	4) Melter overpack movement is a continuation from step 3. • Overpack door front bolts are removed.
3.6.1.2.1	D	SU/COM	The following test is dependent on the availability of the melter overpack, as it is not planned to be procured until it is required during hot operations and melter failure. Transfer melter overpack to the melter cave C5 shield door interface (for both melter cave 1 and melter cave 2).	(GTC) Move the melter overpack to interface with the melter cave rail system. Confirm the melter transport bogie, melter support base and melter overpack interface with the rail system without interference with the C5 shield door.	An overpack may not be available for Startup or Commissioning to complete verification.	5) Melter overpack movement is a continuation from step 4. • Overpack door rear bolts are removed.
3.6.1.2.1	D	SU/COM	Transfer initial melter to the melter cave C5 shield door interface (for both melter cave 1 and melter cave 2)	(GTC) Move the melter to the C2 corridor and confirm the melter transport bogie passes through the architectural roll-up receipt bay doors, HC0104A (MC1 rail system), and HC0104-1 (MC2 rail system) without contacting door framework.	1, 2, 3, 4) Rail end stops weigh 845lbs, and will require an appropriate lifting device to move them from position to position.	1) Melter transport bogie/melter support base positioned on the MAP. Melter pre-assembled and located on the melter transport bogie/melter support base. Receipt bay rollup door is open. • Melter bogie rail stops are installed
3.6.1.2.1	D	SU/COM	Transfer initial melter to the melter cave C5 shield door interface (for both melter cave 1 and melter cave 2)	(GTC) Move the melter to the C2/C3 airlock and confirm the melter transport bogie passes through the C2 confinement doors, HMH0DOOR-00008 (MC1 rail system) and HMH-DOOR-00013 (MC2 rail system) without contacting the door framework.		2) Melter movement is a continuation from step 1. C2 containment door is opened. Melter bogie rail stops are re-positioned and installed

Appendix A - Test Objectives, Conditions, and Acceptance Criteria

NOTE: Demonstrations and Tests identified in this appendix are preliminary, pending completion of design activities. They are established to document the flowdown of verification needs established in Section 3 but are not sufficiently detailed for development of specific system and equipment test plans. They may be used for general planning only. This note is to be removed when design is sufficiently progressed to provide the details needed to establish the basis for testing and acceptance criteria.[HOLD]| 24590-WTP-ATS-MGT-14-0590]

Requirement Section No.	Test (T) or Demo (D)	SU or COM	Plan (Including SSCs)**	Acceptance Criteria (TAC or GTC)*	Notes/Comments	Test Conditions
3.6.1.2.1	D	SU/COM	Transfer initial melter to the melter cave C5 shield door interface (for both melter cave 1 and melter cave 2)	(GTC) Move the melter to the C3/C5 airlock and confirm the melter transport bogie passes through the C2/C3 airlock doors, HMH-DOOR-00009 (MC1 rail system) and HMH-DOOR-00014 (MC2 rail system) without contacting the door framework.		3) Melter movement is a continuation from step 2. C2/C3 shield door is opened. Melter bogie rail stops are re-positioned and installed.
3.6.1.2.1	D	SU/COM	Transfer initial melter to the melter cave C5 shield door interface (for both melter cave 1 and melter cave 2)	(GTC) Move the melter through the C5 door to interface with the melter cave rail system. Confirm the melter transport bogie, melter support base and melter interface with the rail system without interference with the C5 shield door.		4) Melter movement is a continuation from step 3. C5 shield door is opened. Melter to be moved into melter cave using interfacing system HSH melter import winch, HSH-RCVY-00005.
3.6.1.2.1 3.6.1.2.2	D	SU/COM	Demonstrate capability to recover of melter transport bogie loaded with maximum weight.	(GTC) Successfully remove melter transport bogie using recovery provisions.	Maximum weight indicates the weight of a spent melter with excess glass in the melter overpack. This test may be performed concurrently with the demonstration for Requirement 3.6.1.1.	

Appendix A - Test Objectives, Conditions, and Acceptance Criteria

NOTE: Demonstrations and Tests identified in this appendix are preliminary, pending completion of design activities. They are established to document the flowdown of verification needs established in Section 3 but are not sufficiently detailed for development of specific system and equipment test plans. They may be used for general planning only. This note is to be removed when design is sufficiently progressed to provide the details needed to establish the basis for testing and acceptance criteria.[HOLD][24590-WTP-ATS-MGT-14-0590]

Requirement Section No.	Test (T) or Demo (D)	SU or COM	Plan (Including SSCs)**	Acceptance Criteria (TAC or GTC)*	Notes/Comments	Test Conditions
3.7.3.1	D	SU/COM	Demonstrate the capability for the C5 shield door, when in the fully closed position, to receive, lift, and restrain the melter overpack closure shield door in order to remotely separate the overpack shield door from the overpack and the capability for the C5 shield door, when in the fully closed position to lower the melter overpack closure shield door onto the melter overpack.	(GTC) The overpack shield door is removed remotely from the melter overpack. The overpack shield door is inserted remotely from the C5 shield door.	An overpack may not be available for Startup or Commissioning to complete verification	
3.8.2.1	D	SU/COM	Demonstrate controls and monitoring of the following using the MHJ: Control: Manually control the following HMH equipment via LOI • C2/C3 and C5 Shield Doors (HMH-DOOR-00009, HMH-DOOR-00014, HMH-DOOR-00010, HMH-DOOR-00015) • C2 Containment Doors (HMH-DOOR-00008, HMH-DOOR-00013) • Architectural roll-up doors Monitoring • Position indicators for door positions	(GTC) Successfully show all control and monitoring of the HMH equipment listed.		
3.8.2.2.1 3.8.2.2.2 3.8.2.3	D	SU/COM	Demonstrate the operability of the following non-safety interlocks: • HVAC Support Interlocks o Receipt bay rollup door and the C2 containment door o C2 containment door and C2/C3 shield door o C2/C3 shield door and the C5 shield door • Interlocks for C5 Shield Door and the C5 Shield Door Lifting and Locking Cylinders • Interlocks for C2 Containment Door • Engagement of Physical Locks Local control interlocks for the C5 and C2/C3 shield doors and C2 containment doors	(GTC) The listed interlocks are operable.		MHJ operating and monitoring.

Notes:

* Test acceptance criteria (TAC) are based on requirements from authorization basis documents. General test criteria (GTC) are requirements from other sources.

CTN - component tag number

**Any non-safety related anomalies or issues experienced during the execution of a test or demonstration plan to validate a requirement can be put on [HOLD] until the issue has been resolved.

Appendix B - Descriptions of System Functional Flow and Interactions

Function: A.1	Load Overpack onto Melter Transport Bogie
Detailed description: Preconditions for new melter import: (1) An empty overpack sits on a transporter (by others) that is docked along the Melter Assembly Pad (MAP), aligned with the correct pair of transport bogie rails. (2) A fully-assembled melter (by others) sits on the melter assembly cart on the MAP. Tie downs securing the overpack to the transporter are removed, and the melter lift system is assembled (as necessary) adjacent to the overpack. The operator lifts the melter overpack using melter lift system, and removes blocking material under melter overpack. The melter assembly pad (MAP) rail and melter staging cart rail trench cover plates are removed. Rail stops (HMH-RAIL-00008, -00009) are placed at position 2 (north side of the receipt bay rollup door), and on the north end of bogie rails built into the docked transporter. The melter transport bogie (HMH-MHAN-00047) is moved from its storage location to the melter assembly pad rails using a temporary crane. Power to the melter transport bogie is provided by connecting the MAP cable reel. The melter transport bogie is moved onto the docked transporter and under the melter overpack. The operator manually lowers melter overpack onto the melter transport bogie using melter lift system. The bogie is driven off the docked trailer, onto the MAP. The rail stops are relocated from the transporter to rail stop position 1.	
Initiation: This function initiates when the new melter is fully assembled and the empty overpack transporter is docked along the MAP.	
Termination: This function terminates when the rails stops are installed at rail stop position 1.	
Parallel or sequential functions: N/A	
Applicable Modes: Normal Operations	

Function: A.2	Transfer New Melter into Overpack
Detailed description: The melter overpack is moved to the melter loading position on the MAP rails. The operator manually removes melter overpack door using a temporary crane. The melter staging cart is aligned with the MAP rails using the melter staging cart winch. Once aligned the temporary crane is used to remove the cart lid assembly fixture and place it in its storage location. The melter overpack winch is attached to the melter. The melter staging cart seismic tail hooks feature is removed and place in its storage location. The new melter is pulled into the melter overpack using the melter overpack winch. Once the melter is in the melter overpack, the melter staging cart is moved to its storage location between the MAP rails using the melter staging cart winch. Using the temporary crane, the operator manually re-installs the overpack door and attaches it using the front and back bolts. The melter transport bogie moves the melter overpack with melter up to receipt bay rollup door. The MAP cable reel providing power to the melter transport bogie is removed.	
Initiation: This function initiates when the melter overpack is moved into the melter loading position.	
Termination: This function terminates when the power MAP cable reel has been disconnected.	
Parallel or sequential functions: N/A	
Applicable Modes: Normal Operations	

Function: A.3	Transfer Melter Overpack with New Melter to C2 Corridor
Detailed description: The receipt bay rollup door is manually opened by the operator. Door filler blocks and C2 corridor rail trench covers are removed. The rail stops are relocated from rail stop position 2 to rail stop position 4 (north side of C2 containment). Power is provided by plugging the bogie power cord into the bogie C2 corridor power source. The melter overpack is transported to bogie position 1 (C2 corridor) using the melter transport bogie. The second set of rail stops are moved from position 1 to rail stop position 3 (south side of receipt bay rollup door). The operator then re-installs the filler blocks and MAP/melter staging cart rail trench cover plates. The receipt bay rollup door is manually closed by the operator.	
Initiation: This function initiates when the operator manually opens the receipt bay rollup door.	
Termination: This function terminates when the operator manually closes the receipt bay rollup door.	
Parallel or sequential functions: N/A	
Applicable Modes: Normal Operations	

Function: A.4	Transfer Melter Overpack with New Melter to C2/C3 Airlock

Detailed description: Operator manually opens C2 containment door, removes door rail sections, filler blocks, and C2/C3 airlock rail trench cover plates. Rails stops are relocated from position 4 (north side of C2 containment door) to position 6 (north side of C2/C3 containment door). The melter overpack is transported to bogie position 2 (C2/C3 airlock) using the melter transport bogie. The bogie power cord is unplugged from the C2 corridor source and plugged into the C2/C3 airlock power source. The rail stops are relocated from position 3 to rail stop position 5 (south side of the C2 containment door). The operator re-installs filler blocks, door rail sections, and C2 corridor rail trench cover plates, and manually closes the C2 containment door.
Initiation: This function initiates when the operator manually opens C2 containment door.
Termination: This function terminates when the operator manually closes C2 containment door.
Parallel or sequential functions: N/A
Applicable Modes: Normal Operations

Function: A.5	Transport Melter Overpack with New Melter to C3/C5 Corridor
Detailed description: The C2/C3 shield door is manually opened by the operator before removing door rail sections, filler blocks, and C3/C5 airlock rail trench cover plates. The rail stops at rail stop position 6 are relocated to rail stop position 8. The melter overpack is moved to transport bogie position 3 using the melter transport bogie. The rail stops at position 5 are relocated to rail stop position 7 and the rail stops from rails stop position 8 are removed. The bogie power cord is unplugged from the C2/C3 airlock source and plugged into the C3/C5 airlock power source. The operator manually reinstalls door rail sections, filler blocks, and the C2/C3 airlock rail trench cover plates. The melter overpack door front bolts are manually removed by the operator. The melter overpack is moved to transport bogie position 4 using the melter transport bogie before the operator manually removes the melter overpack door rear bolts. The operator positions the overpack fascia doors around the melter overpack and exits the C3/C5 airlock. The C2/C3 shield door is manually closed by the operator.	
Initiation: This function initiates when the operator manually opens C2/C3 shield door.	
Termination: This function terminates when the operator manually closes the C2/C3 shield door.	
Parallel or sequential functions: N/A	
Applicable Modes: Normal Operations	

Function: A.6	Offload New Melter from Overpack into Melter Cave
Detailed description: The top, then bottom, lifting cylinders on the C5 shield door are extended to transfer the overpack door to the C5 door. The melter transport bogie moves the overpack to transport bogie position 5. The C5 door bottom lifting cylinders are retracted and the C5 shield door is opened. The melter transport bogie moves the melter overpack to transport bogie position 6 (C3/C5 airlock operating at melter cave face). The melter overpack winch brake is released then the winch drive/clutch is configured as a dynamic brake. HSH equipment connects to the melter and pulls it out of the overpack, into the melter cave. HSH equipment disconnects the winch cable from the melter, and it is rewound and placed in a predetermined positioned (accessible to the HSH crane power manipulator) inside the overpack. The melter transport bogie moves the overpack back to transport bogie position 5, and the C5 shield door is closed.	
Initiation: This function initiates by extending the top melter overpack door locking cylinder on the C5 shield door.	
Termination: This function terminates with the closure of the C5 shield door.	
Parallel or sequential functions: N/A	
Applicable Modes: Normal Operations	

Function: A.7	Transfer Overpack to C2/C3 Corridor
Detailed description: The bottom lifting cylinders on the C5 shield door are extended. The melter transport bogie moves the overpack to transport bogie position 4. The bottom, then top, lifting cylinders on the C5 shield door are retracted to transfer the overpack door to the overpack. The C2/C3 shield door is manually opened by the operator who then enters the C3/C5 airlock and manually opens the fascia doors. The operator reinstalls the melter overpack door rear bolts, moves the transport bogie to position 3, and manually attaches melter overpack door front bolts. A surface contamination check is performed manually by the operator on all melter overpack surfaces. The door rail sections, filler blocks, and C2/C3 airlock rail trench over plates are removed manually by the operator. Rails stops are placed at rail stop position 8 and the rails stops at rail stop position 7 are relocated to rail stop position 5. The bogie power cord is unplugged from the C3/C5 airlock source and plugged into the C2/C3 airlock power source. The melter transport bogie is used to move the melter overpack to transport bogie position 2. The rail stops at position 8 are relocated to rail stop position 6. Filler blocks, rail sections, and the C3/C5 airlock rail trench cover plates are manually reinstalled by the operator before closure of the C2/C3 shield door.	
Initiation: This function initiates by extending the bottom melter overpack door lifting cylinders on the C5 shield door.	
Termination: This function terminates with the closure of the C2/C3 shield door.	

Parallel or sequential functions: N/A
Applicable Modes: Normal Operations

Function: A.8	Transfer Overpack to C2 Corridor
Detailed description: The C2 containment door is manually opened by the operator. Door rail sections, filler blocks, and the C2 corridor rail trench over plates are removed. The rail stops at rail stop position 5 are relocated to rail stop position 3. The bogie power cord is unplugged from the C2/C3 airlock source and plugged into the C2 corridor source. The overpack is transported to bogie position 1 using the melter transport bogie. The rails stops at rail stop position 6 are relocated to rail stop position 4. The filler blocks, rail sections, C2/C3 airlock trench cover plates are reinstalled. The C2 containment door is manually closed.	
Initiation: This function initiates with the manual opening of the C2 containment door.	
Termination: This function terminates with the manual closure of the C2 containment door.	
Parallel or sequential functions: N/A	
Applicable Modes: Normal Operations	

Function: A.9	Transfer Overpack to Melter Assembly Pad
Detailed description: The receipt bay rollup door is opened manually by the operator and door filler blocks and MAP rail trench cover plates are removed. The rail stops at rail stop position 3 are relocated on the north end of bogie rails built into the docked transporter. The melter overpack is moved to the MAP using the melter transport bogie. The bogie power cord is unplugged and the bogie is plugged into the MAP cable reel. The rail stops at rail stop position 4 are relocated to rail stop position 2. The filler blocks and C2 corridor rail trench cover plates are reinstalled and the receipt bay rollup door is closed. The overpack is transported to the docked trailer using the melter transport bogie.	
Initiation: This function initiates with the manual opening of the receipt bay rollup door.	
Termination: This function terminates with the overpack being transported to the docked trailer.	
Parallel or sequential functions: N/A	
Applicable Modes: Normal Operations	

Function: A.10	Offload Overpack from Transport Bogie
Detailed description: The overpack is lifted off the melter transport bogie using the melter lift system. The melter transport bogie is moved out from underneath the melter overpack, onto the MAP. The rail stops are relocated from the transporter to rail stop position 1. Blocking material is manually placed under the melter overpack by the operator who then lowers the overpack onto the blocking material using the melter lift system. The melter lift system is disassembled (as necessary) and the overpack is secured to the transporter. The melter transport bogie and rail stops will be stored at their pre-determined storage location. The MAP rail trench cover plates will be reinstalled.	
Initiation: This function initiates when the melter overpack is lifted off the melter transport bogie using the melter lift system.	
Termination: This function terminates when the MAP rail trench cover plates are reinstalled.	
Parallel or sequential functions: N/A	
Applicable Modes: Normal Operations	

Function: B.1	Load Overpack onto Melter Transport Bogie
Detailed description: An empty overpack sits on a transporter (by others) that is docked along the Melter Assembly Pad (MAP), aligned with the correct pair of transport bogie rails. Tie downs securing the overpack to the transporter are removed, and the melter lift system is assembled (as necessary) adjacent to the overpack. The operator lifts the melter overpack using melter lift system, and removes blocking material under melter overpack. The melter assembly pad (MAP) rail and melter staging cart rail trench cover plates are removed. Rail stops (HMH-RAIL-00008, -00009) are placed at position 2 (north side of the receipt bay rollup door), and on the north end of bogie rails built into the docked transporter. The melter transport bogie (HMH-MHAN-00047) is moved from its storage location to the melter assembly pad rails using a temporary crane. Power to the melter transport bogie is provided by connecting the MAP cable reel. The melter transport bogie is moved onto the docked transporter and under the melter overpack. The operator manually lowers melter overpack onto the melter transport bogie using melter lift system. The bogie is driven off the docked trailer, onto the MAP. The rail stops are relocated from the transporter to rail stop position 1. The melter transport bogie moves the melter overpack up to receipt bay rollup door. The MAP cable reel providing power to the melter transport bogie is removed.	
Initiation: This function initiates when a failed/spent[1] melter is awaiting retrieval from melter cave and an empty overpack is on the docked transport trailer.	
Termination: This function terminates when the melter overpack is moved up to a closed receipt bay rollup door.	

Parallel or sequential functions: N/A
Applicable Modes: Normal Operation

Function: B.2	Transport Empty Melter Overpack to C2 Corridor
Detailed description: The receipt bay rollup door is manually opened by the operator. Door filler blocks and the C2 corridor rail trench cover plates are removed. The rails stops are relocated from position 2 to rail stop position 4. Power is provided by plugging the bogie power cord into the bogie C2 corridor power source. The overpack is transported to bogie position 1 using the melter transport bogie. The rail stops at rail stop position 1 are relocated to rail stop position 3. Filler blocks and MAP rail trench cover plates are reinstalled by the operator, who then manually closes the receipt bay rollup door.	
Initiation: This function initiates when the receipt bay rollup door is manually opened by the operator.	
Termination: This function terminates when the receipt bay rollup door is manually closed by the operator.	
Parallel or sequential functions: N/A	
Applicable Modes: Normal Operation	

Function: B.3	Transport Empty Melter Overpack to C2/C3 Airlock
Detailed description: The C2 containment door will be manually opened by the operator before door rail sections, filler blocks, and the C2/C3 airlock rail trench cover plates are removed. The rails stops located at rail stop position 4 will be relocated to rail stop position 6. The melter overpack will be moved by the melter transport bogie to transport position 2. The bogie power cord is unplugged from the C2 corridor source and plugged into the C2/C3 airlock power source. Rail stops located at position 3 will be relocated to position 5. Filler blocks, door rail sections, and C2 corridor airlock rail trench cover plates will be reinstalled. The C2 containment door is manually closed by the operator.	
Initiation: This function initiates when the C2 containment door is manually opened by the operator.	
Termination: This function terminates when the C2 containment door is manually closed by the operator.	
Parallel or sequential functions: N/A	
Applicable Modes: Normal Operation	

Function: B.4	Transport Empty Melter Overpack to C3/C5 Airlock
Detailed description: The C2/C3 shield door is manually opened by the operator who also removes door rail sections, filler blocks, and C3/C5 airlock rail trench cover plates. Rail stops located at rail stop position 6 will be relocated to rail stop position 8. The melter overpack is moved to transport bogie position 3 with the melter transport bogie. The rail stops at position 5 are relocated to rail stop position 7 and the rail stops from rails stop position 8 are removed. The bogie power cord is unplugged from the C2/C3 airlock source and plugged into the C3/C5 airlock power source. The operator manually reinstalls door rail sections, filler blocks, and the C2/C3 airlock rail trench cover plates. The melter overpack door front bolts are manually removed by the operator. The melter overpack is then moved to transport bogie position 4 using the melter transport bogie before the operator manually removes the melter overpack door rear bolts. The operator positions the overpack fascia around the melter overpack and exits the C3/C5 airlock. The C2/C3 shield door is manually closed by the operator.	
Initiation: This function initiates when the C2/C3 shield door is opened manually by the operator.	
Termination: This function terminates when the C2/C3 shield door is closed manually by the operator.	
Parallel or sequential functions: N/A	
Applicable Modes: Normal Operations	

Function: B.5	Load Spent Melter into Overpack
Detailed description: The top, then bottom, lifting cylinders on the C5 shield door are extended to transfer the overpack door to the C5 shield door. The melter transport bogie moves the overpack to bogie position 5. The C5 door bottom lifting cylinders are retracted, and the C5 door is opened. The melter transport bogie moves the melter overpack to transport bogie position 6. The melter overpack winch brake is released and the winch hook is grasped by an HSH in-cave crane. The crane unspools the winch cable and connects the hook it to the melter. The melter overpack winch pulls the spent melter into the melter overpack. The melter transport bogie moves the overpack bogie position 5. The C5 shield door is closed and the bottom lifting cylinders on the C5 shield door are extended. The melter is moved to transport bogie position 4 using the melter transport bogie. The bottom and top melter overpack door lifting cylinders on the C5 shield door are retracted to transfer the overpack door back onto the overpack. The C2/C3 shield door is manually opened by the operator who enters the C3/C5 airlock. The operator manually positions the fascia clear of the melter overpack before installing the melter overpack door rear bolts. The melter overpack is moved to transport bogie position 3 using the melter transport bogie. The melter overpack door front bolts are manually attached by the operator. A surface contamination check is performed manually on the	

melter overpack surfaces.
Initiation: This function initiates by extending top melter overpack door locking cylinders on the C5 shield door.
Termination: This function terminates when the overpack passes a manual surface contamination check.
Parallel or sequential functions: N/A
Applicable Modes: Normal Operations

Function: B.6	Transport Overpack with Spent Melter to C2/C3 Airlock
Detailed description: The operator manually removes door rail sections, filler blocks, and C2/C3 airlock rail trench cover plates. Rail stops are placed at rail stop position 8 and relocated from rail stop position 7 to rail stop position 5. The bogie power cord is unplugged from the C3/C5 airlock source and plugged into the C2/C3 airlock power source. The overpack with the spent melter is moved to bogie position 2 using the melter transport bogie. The rails stops at position 8 are relocated to rail stop position 6. The operator re-installs filler blocks, rail sections, C3/C5 airlock rail trench cover plates, and manually closes the C2/C3 shield door.	
Initiation: This function initiates when the operator has manually removed the door rail sections, filler blocks, and C2/C3 airlock rail trench cover plates.	
Termination: This function terminates when the C2/C3 shield door has been manually closed by the operator.	
Parallel or sequential functions: N/A	
Applicable Modes: Normal Operations	

Function: B.7	Transport Overpack with Spent Melter to C2 Corridor
Detailed description: The C2 containment door will be manually opened by the operator. Door rail sections, filler blocks, and the C2 corridor rail trench over plates will be removed. The rail stops at rail stop position 5 will be relocated to rail stop position 3. The bogie power cord is unplugged from the C2/C3 airlock source and plugged into the C2 corridor power source. The overpack with spent melter will be transported to bogie position 1 using the melter transport bogie. The rails stops at rail stop position 6 will be relocated to rail stop position 4. The filler blocks, rail sections, C2/C3 airlock trench cover plates will be reinstalled. The C2 containment door will be manually closed.	
Initiation: This function initiates when the C2 containment door has been manually opened.	
Termination: This function terminates when the C2 containment door has been manually closed.	
Parallel or sequential functions: N/A	
Applicable Modes: Normal Operations	

Function: B.8	Transport Overpack with Spent Melter to Melter Assembly Pad
Detailed description: The receipt bay rollup door will be opened manually by the operator and the MAP rail trench cover plates will be removed. The rail stops at rail stop position 3 will be relocated to the north end of bogie rails built into the docked transporter. The melter overpack with the spent melter will be moved to the MAP using the melter transport bogie. The bogie power cord is unplugged. The rail stops at rail stop position 4 will be relocated to rail stop position 2. The filler blocks and C2 corridor rail trench cover plates will be reinstalled. The receipt bay rollup door will be manually closed by the operator	
Initiation: This function initiates when the receipt bay rollup door is manually opened.	
Termination: This function terminates when the receipt bay rollup door is manually closed.	
Parallel or sequential functions: N/A	
Applicable Modes: Normal Operations	

Function: B.9	Load Overpack with Spent Melter onto Transport Vehicle
Detailed description: Power is provided to the melter transport bogie after the MAP cable reel has been connected. The overpack with the spent melter is transported onto the transport trailer using the melter transport bogie. The overpack with the spent melter is lifted off the melter transport bogie using the melter lift system. The melter transport bogie is moved back to the MAP. Blocking material will be placed under the melter overpack before the overpack is lowered onto the transport vehicle. The melter lift system is disassembled (as necessary) and the overpack is secured to the transporter. The melter transport bogie and rail stops will be stored at their pre-determined storage location. The MAP rail trench cover plates will be reinstalled.	
Initiation: This function initiates when the MAP cable reel is connected to the melter transport bogie.	
Termination: This function ends when the MAP rail trench cover plates are reinstalled.	
Parallel or sequential functions: N/A	

Applicable Modes: Normal Operations

1) For all B functions, the word spent and failed can be used interchangeably.

Function: C.1	C2/C3 Airlock and C3/C5 Airlock Receive Water for Decontamination
Detailed description: Demineralized water is supplied by the demineralized water system (DIW) to the C2/C3 and C3/C5 airlocks to support decontamination of the airlocks and HMH equipment. The waste water is collected in the airlock sumps and transferred to the radioactive liquid waste (RLD) system.	
Initiation: This function initiates when decontamination of HMH equipment and the C2/C3 and C3/C5 airlocks is required.	
Termination: This function terminates after decontamination of C2/C3 and C3/C5 airlocks.	
Parallel or sequential functions: N/A	
Applicable Modes: Decontaminating and decommissioning (D&D)	

Function: D.1	Receive Electrical Power
Detailed description: Electrical power to the HMH equipment and instruments is supplied by the LVE system.	
Initiation: This function initiates when the HLW facility is in start-up operations.	
Termination: This function terminates when HLW glass production operations are complete.	
Parallel or sequential functions: All functions	
Applicable Modes: All modes	

Function: E.1	Facilitate Remote Viewing of Remote Operations via CCTV
Detailed description: Operators utilize cameras to view remote HMH operations. A process and mechanical handling monitoring closed circuit television (CCTV) system is required for remote viewing of equipment and operations within cave areas and where the radiation levels are too high for personnel access. Cameras are located to give optimum viewing angles and distance to suit the process and are radiation tolerant. Monitors are located at operator interface points, e.g., control room, remote stations (local operator interface - LOI's), etc.	
Initiation: This function initiates when the cameras are turned on.	
Termination: This function terminates when the cameras are turned off.	
Parallel or sequential functions: All functions	
Applicable Modes: All modes	

Function: F.1	Support Monitoring, Control, & Communication
Detailed description: The mechanical handling control system (MHJ) provides the non-safety monitoring and control functions for HMH. This includes: • Positioning monitoring for architectural roll-up, shield and containment doors • Overpack and overpack door position monitoring • C5 shield door cylinder engagement • Manually control of architectural roll-up, shield and containment doors through LOI.	
Initiation: This function initiates at the beginning of mechanical handling equipment operations.	
Termination: This function terminates when mechanical handling equipment operations are complete.	
Parallel or sequential functions: All functions	
Applicable Modes: All modes	

Function: G.1	Staging Melter Overpack with New Vessel on Transfer Cart
Detailed description: The melter overpack is staged on the melter transport bogie on the MAP. The HSH vessel transfer cart (HSH-TRLY-00003) carrying a new vessel is loaded into the melter overpack.	
Initiation: This function imitates when the melter overpack is staged on the melter transport bogie on the MAP.	
Termination: This function terminates when the HSH transfer cart with new vessel is loaded into the melter overpack.	
Parallel or sequential functions: N/A	
Applicable Modes: Normal Operations	

Function: G.2	Transfer Overpack to C2 Corridor
Detailed description: The receipt bay rollup door is manually opened by the operator. The rail stops are relocated from rail stop position 2 to rail stop position 4 (north side of C2 containment). Power and communications are provided by the C2	

corridor cable reel that is connected to the melter transport bogie. The melter overpack with the loaded vessel transfer cart is transported to bogie position 1 (C2 corridor) using the melter transport bogie. The second set of rail stops are moved from position 1 to rail stop position 3 (south side of receipt bay rollup door). The operator will then re-install filler blocks and MAP/melter staging cart rail trench cover plates. The receipt bay rollup door is manually closed by the operator.
Initiation: This function initiates when the operator manually opens the receipt bay rollup door.
Termination: This function terminates when the operator manually closes the receipt bay rollup door.
Parallel or sequential functions: N/A
Applicable Modes: Normal Operations

Function: G.3	Transfer Melter Overpack with New Vessel to C2/C3 Airlock
Detailed description: Operator manually opens C2 containment door, removes door rail sections, filler blocks, and C2/C3 airlock rail trench cover plates. Rails stops are to be relocated from position 4 (north side of C2 containment door) to position 6 (north side of C2/C3 containment door). The melter overpack with the loaded vessel transfer cart is transported to bogie position 2 (C2/C3 airlock) using the melter transport bogie. The C2 cable reel is disconnected from the melter transport bogie. The rail stops are relocated from position 3 to rail stop position 5 (south side of the C2 containment door). The operator re-installs filler blocks, door rail sections, C2 corridor rail trench cover plates, and manually closes the C2 containment door.	
Initiation: This function initiates when the operator manually opens C2 containment door.	
Termination: This function terminates when the operator manually closes C2 containment door.	
Parallel or sequential functions: N/A	
Applicable Modes: Normal Operations	

Function: G.4	Transport Melter Overpack with New Vessel to C3/C5 Corridor
Detailed description: The C2/C3 shield door is manually opened by the operator before removing door rail sections, filler blocks, and C3/C5 airlock rail trench cover plates. The rail stops at rail stop position 6 are relocated to rail stop position 8. The C3/C5 airlock cable reel is connected to the melter transport bogie providing power and communications. The melter overpack with the loaded vessel transfer cart is moved to transport bogie position 3 with the melter transport bogie. The rail stops at position 5 are relocated to rail stop position 7 and the rail stops from rails stop position 8 are removed. The operator manually reinstalls door rail sections and filler blocks. The melter overpack door front bolts are manually removed by the operator. The melter overpack is then moved to transport bogie position 4 using the melter transport bogie before the operator manually removes the melter overpack door rear bolts. The operator positions the overpack fascia around the melter overpack and exits the C3/C5 airlock. The C2/C3 shield door is manually closed by the operator.	
Initiation: This function initiates when the operator manually opens C2/C3 shield door.	
Termination: This function terminates when the operator manually closes the C2/C3 shield door.	
Parallel or sequential functions: N/A	
Applicable Modes: Normal Operations	

Function: G.5	Offload New Vessel from Overpack into Melter Cave
Detailed description: The top then bottom melter overpack door lifting cylinders will be extended on the C5 shield door. The operator will manually remove the Overpack door front bolts before moving the transport bogie into transport bogie position 4 (C3/C5 airlock operating position at C5 shield door). The melter overpack is moved to transport bogie position 5 (C3/C5 airlock operating position before C5 shield door) using the melter transport bogie. Once in position retract bottom melter overpack door lifting cylinders on C5 shield door. The C5 shield door can now be opened to allow the melter transport bogie to move the melter overpack into transport bogie position 6 (C3/C5 airlock operating at melter cave face). The melter overpack winch brake is released then the winch drive/clutch is configured as a dynamic brake. HSH moves the vessel into the melter cave. The winch cable is rewound and positioned to a preset position accessible to the power manipulator. The melter is moved back to transport bogie position 5 using the melter transport bogie. Once in that position the C5 shield door is closed.	
Initiation: This function initiates by extending the top melter overpack door locking cylinder on the C5 shield door.	
Termination: This function terminates with the closure of the C5 shield door.	
Parallel or sequential functions: N/A	
Applicable Modes: Normal Operations	

Function: G.6	Transfer Overpack to C2/C3 Airlock
Detailed description: Once the C5 shield door is closed, the bottom of the melter overpack door lifting cylinder on the C5	

shield door will be extended. The melter overpack will then be moved to transport bogie position 4 (C3/C5 airlock operating position at C5 shield door) using the melter transport bogie. Once in transport bogie position 4 the bottom then top of the melter overpack door lifting cylinders on the C5 shield door will be retracted. The C2/C3 shield door is manually opened by the operator who then enters the C3/C5 airlock. The fascia door will be cleared of the melter overpack move path manually by the operator. Before moving to transport bogie position 3 the operator reinstalls the melter overpack door rear bolts. Once in transport bogie position 3 the operator manually attaches melter overpack door front bolts. A surface contamination check is performed manually by the operator on all melter overpack surfaces. The door rail sections, filler blocks, and C2/C3 airlock rail trench over plates are removed manually by the operator. Rails stops are placed at rail stop position 8 and the rails stops at rail stop position 7 are relocated to rail stop position 5. The melter transport bogie is used to move the melter overpack to transport bogie position 2. Once in position the C3/C5 airlock cable reel is disconnected. The rail stops at position 8 are relocated to rail stop position 6. Filler blocks, rail sections, and the C3/C5 airlock rail trench cover plates are manually reinstalled by the operator before closure of the C2/C3 shield door.
Initiation: This function initiates by extending the bottom melter overpack door lifting cylinder on the C5 shield door.
Termination: This function terminates with the closure of the C2/C3 shield door.
Parallel or sequential functions: N/A
Applicable Modes: Normal Operations

Function: G.7	Transfer Overpack with Empty Transfer Cart to C2 Corridor
Detailed description: The C2 containment door will be manually opened by the operator. Door rail sections, filler blocks, and the C2 corridor rail trench over plates will be removed. The rail stops at rail stop position 5 will be relocated to rail stop position 3. Power and communications to the melter transport bogie will be connected by the C2 corridor cable reel. The overpack will be transported to bogie position 1 using the melter transport bogie. The rails stops at rail stop position 6 will be relocated to rail stop position 4. The filler blocks, rail sections, C2/C3 airlock trench cover plates will be reinstalled. The C2 containment door will be manually closed.	
Initiation: This function initiates with the manual opening of the C2 containment door.	
Termination: This function terminates with the manual closure of the C2 containment door.	
Parallel or sequential functions: N/A	
Applicable Modes: Normal Operations	

Function: G.8	Transfer Overpack with Empty Transfer Cart to Melter Assembly Pad
Detailed description: The receipt bay rollup door will be opened manually by the operator and the MAP rail trench cover plates will be removed. The rail stops at rail stop position 3 will be relocated to rail stop position 1. The melter overpack will be moved to the MAP using the melter transport bogie. The C2 corridor cable reel will then be disconnected from the melter transport bogie. The rail stops at rail stop position 4 will be relocated to rail stop position 2. The filler blocks and C2 corridor rail trench cover plates will be reinstalled. The MAP cable reel is connected to the melter transport bogie to provide power and communications. The overpack is transported to the docked trailer using the melter transport bogie.	
Initiation: This function initiates with the manual opening of the receipt bay rollup door.	
Termination: This function terminates with the overpack being transported to the docked trailer.	
Parallel or sequential functions: N/A	
Applicable Modes: Normal Operations	

Function: H.1	Load Melter Overpack with Empty Transfer Cart
Detailed description: The melter overpack is staged on the melter transport bogie on the MAP. The empty HSH vessel transfer cart (HSH-TRLY-00003) is loaded into the melter overpack.	
Initiation: This function imitates when the melter overpack is staged on the melter transport bogie on the MAP.	
Termination: This function terminates when the HSH transfer cart with new vessel is loaded into the melter overpack.	
Parallel or sequential functions: N/A	
Applicable Modes: Normal Operations	

Function: H.2	Transport Melter Overpack with Empty Transfer Cart to C2 Corridor
Detailed description: The receipt bay rollup door is manually opened by the operator. The C2 corridor rail trench cover plates are removed and the rails stops are relocated from position 2 to rail stop position 4. The MAP cable reel is disconnected while the C3 corridor cable reel is connected providing power and communications to the melter transport bogie. The melter is transported to transport bogie position 1 using the melter transport bogie. The rail stops at rail stop position 1 are relocated to rail stop position 3. Filler blocks and MAP rail trench cover plates are reinstalled by the operator, who then manually	

closes the receipt bay rollup door.
Initiation: This function initiates when the receipt bay rollup door is manually opened by the operator.
Termination: This function terminates when the receipt bay rollup door is manually closed by the operator.
Parallel or sequential functions: N/A
Applicable Modes: Normal Operations

Function: H.3	Transport Melter Overpack with Empty Transfer Cart to C2/C3 Airlock
Detailed description: The C2 containment door will be manually opened by the operator before door rail sections, filler blocks, and the C2/C3 airlock rail trench cover plates are removed. The rails stops located at rail stop position 4 will be relocated to rail stop position 6. The melter overpack will be moved by the melter transport bogie to transport position 2. The C2 corridor cable reel will be disconnect. Rail stops located at position 3 will be relocated to position 5. Filler blocks, door rail sections, and C2 corridor airlock rail trench cover plates will be reinstalled. The C2 containment door is manually closed by the operator.	
Initiation: This function initiates when the C2 containment door is manually opened by the operator.	
Termination: This function terminates when the C2 containment door is manually closed by the operator.	
Parallel or sequential functions: N/A	
Applicable Modes: Normal Operations	

Function: H.4	Transport Melter Overpack with Empty Transfer Cart to C3/C5 Airlock
Detailed description: The C2/C3 shield door is manually opened by the operator who also removes door rail sections, filler blocks, and C2/C5 airlock rail trench cover plates. Rail stops located at rail stop position 6 will be relocated to rail stop position 8. The C3/C5 airlock cable reel is connected to the melter transport bogie providing power and communications. The melter overpack is moved to transport bogie position 3 with the melter transport bogie. The rail stops at position 5 are relocated to rail stop position 7 and the rail stops from rails stop position 8 are removed. The operator manually reinstalls door rail sections and filler blocks. The melter overpack door front bolts are manually removed by the operator. The melter overpack is then moved to transport bogie position 4 using the melter transport bogie before the operator manually removes the melter overpack door rear bolts. The operator positions the overpack fascia around the melter overpack and exits the C3/C5 airlock. The C2/C3 shield door is manually closed by the operator.	
Initiation: This function initiates when the C2/C3 shield door is opened manually by the operator.	
Termination: This function terminates when the C2/C3 shield door is closed manually by the operator.	
Parallel or sequential functions: N/A	
Applicable Modes: Normal Operations	

Function: H.5	Load Spent Vessel into the Melter Overpack
Detailed description: The top melter overpack door locking cylinders are extended on the C5 shield door, followed by the bottom melter overpack door lifting cylinders being extended on the C5 shield door. The melter overpack is moved to transport bogie position 5 using the melter transport bogie. Once in this position, retract bottom melter overpack door lifting cylinders on the C5 shield door. The C5 shield door is opened allowing the melter overpack to be transported to transport bogie position 6 using the melter transport bogie. The HSH moves the spent vessel into the melter overpack. The melter overpack is then moved back to transport bogie position 5. The C5 shield door is closed once the melter overpack is in transport bogie position 5. Extend bottom melter overpack door lifting cylinders on the C5 shield door. The melter is moved to transport bogie position 4 using the melter transport bogie where the bottom and top melter overpack door lifting cylinders on the C5 shield door shall be retracted. The C2/C3 shield door is manually opened by the operator who enters the C3/C5 airlock. The operator manually positions the fascia clear of the melter overpack before installing the melter overpack door rear bolts. The melter overpack is moved to transport bogie position 3 using the melter transport bogie. The melter overpack door front bolts are manually attached by the operator. A surface contamination check is performed manually on the melter overpack surfaces.	
Initiation: This function initiates by extending top melter overpack door locking cylinders on the C5 shield door.	
Termination: This function terminates when the overpack passes a manual surface contamination check.	
Parallel or sequential functions: N/A	
Applicable Modes: Normal Operations	

Function: H.6	Transport Overpack with Spent Vessel to C2/C3 Airlock
Detailed description: The operator manually removes door rail sections, filler blocks, and C2/C3 airlock rail trench cover plates. Rail stops are placed at rail stop position 8 and relocated from rail stop position 7 to rail stop position 5. The overpack	

with the spent melter is moved to bogie position 2 using the melter transport bogie. The C3/C5 airlock cable reel is disconnected from the melter transport bogie. The rails stops at position 8 are relocated to rail stop position 6. The operator re-installs filler blocks, rail sections, C3/C5 airlock rail trench cover plates, and manually closes the C2/C3 shield door.
Initiation: This function initiates when the operator has manually removed the door rail sections, filler blocks, and C2/C3 airlock rail trench cover plates.
Termination: This function terminates when the C2/C3 shield door has been manually closed by the operator.
Parallel or sequential functions: N/A
Applicable Modes: Normal Operations

Function: H.7	Transport Overpack with Spent Vessel to C2 Corridor
Detailed description: The C2 containment door will be manually opened by the operator. Door rail sections, filler blocks, and the C2 corridor rail trench over plates will be removed. The rail stops at rail stop position 5 will be relocated to rail stop position 3. Power and communications to the melter transport bogie will be connected by the C2 corridor cable reel. The overpack with spent melter will be transported to bogie position 1 using the melter transport bogie. The rails stops at rail stop position 6 will be relocated to rail stop position 4. The filler blocks, rail sections, C2/C3 airlock trench cover plates will be reinstalled. The C2 containment door will be manually closed.	
Initiation: This function initiates when the C2 containment door has been manually opened.	
Termination: This function terminates when the C2 containment door has been manually closed.	
Parallel or sequential functions: N/A	
Applicable Modes: Normal Operations	

Function: H.8	Transport Overpack with Spent Vessel to Melter Assembly Pad
Detailed description: The receipt bay rollup door will be opened manually by the operator and the MAP rail trench cover plates will be removed. The rail stops at rail stop position 3 will be relocated to rail stop position 1. The melter overpack with the spent melter will be moved to the MAP using the melter transport bogie. The C2 corridor cable reel will then be disconnected from the melter transport bogie. The rail stops at rail stop position 4 will be relocated to rail stop position 2. The filler blocks and C2 corridor rail trench cover plates will be reinstalled. The receipt bay rollup door will be manually closed by the operator.	
Initiation: This function initiates when the receipt bay rollup door is manually opened.	
Termination: This function terminates when the receipt bay rollup door is manually closed.	
Parallel or sequential functions: N/A	
Applicable Modes: Normal Operations	

Function: I.1	Stage Transfer Cart on Melter Assembly Pad
Detailed description: The melter assembly pad (MAP) rail trench cover plates are removed. With its wheels configured for the MAP rail span, the vessel transfer cart (HSH equipment) is placed directly onto the MAP transport bogie rails and loaded with new HSH process equipment. A general-use (non-HMH) mobile crane and/or other mobile equipment are used to transport and load the cart. Rail stops are placed at position 2 (north side of the receipt bay rollup door). A manually operated, general-use propulsion (non-HMH) device is connected to the vessel transfer cart and it is driven south across the MAP to the receipt bay rollup door.	
Initiation: This function initiates with removal of the MAP rail trench cover plates.	
Termination: This function terminates when the transfer cart is positioned outside the receipt bay rollup door.	
Parallel or sequential functions: N/A	
Applicable Modes: All modes	

Function: I.2	Transfer Cart Travels to the C2 Corridor
Detailed description: The receipt bay rollup door is manually opened by the operator. Door filler blocks and C2 corridor rail trench cover plates are removed. The rail stops are relocated from position 2 to position 4 (north side of C2 containment). The transfer cart travels south through the receipt bay rollup door into the C2 corridor. Door filler blocks and the MAP rail trench cover plates are re-installed. The second set of rail stops is installed at position 3 and the receipt bay rollup door is closed.	
Initiation: This function initiates when the receipt bay rollup door is opened.	
Termination: This function terminates when the receipt bay rollup door is closed.	
Parallel or sequential functions: N/A	

Applicable Modes: All modes

Function: I.3	Transfer Cart Travels to the C2/C3 Airlock
Detailed description: The C2 containment door is opened and door seal sections, rail sections, and filler blocks are removed. The C2/C3 airlock rail trench cover plates are removed. The rail stops are relocated from position 4 to position 6. The transfer cart travels south along the melter airlock rails, into the C2/C3 airlock, and is positioned below the HSH crane maintenance area floor hatch. The rails stops are relocated from position 3 to position 5. The C2 door seal sections, rail sections, and filler blocks are re-installed. The C2 corridor rail trench cover plates are re-installed and the C2 containment door is closed.	
Initiation: This function initiates when the C2 containment door is opened.	
Termination: This function terminates when the C2 containment door is closed.	
Parallel or sequential functions: N/A	
Applicable Modes: All modes	

Function: I.4	HSH Offloads Process Equipment
Detailed description: HSH equipment unloads the transfer cart by lifting its cargo through an opening in the ceiling of the C2/C3 airlock.	
Initiation: This function initiates when the C2 containment door is closed.	
Termination: This function terminates when the transfer cart is empty.	
Parallel or sequential functions: N/A	
Applicable Modes: All modes	

Function: I.5	Transfer Empty Transfer Cart to C2 Corridor
Detailed description: The C2 containment door is opened and door seal sections, rail sections, and filler blocks are removed. The C2 corridor airlock rail trench cover plates are removed. The rail stops are relocated from position 5 to position 3. The transfer cart travels north along the melter airlock rails, into the C2 corridor. The rails stops are relocated from position 6 to position 4. The C2 door seal sections, rail sections, and filler blocks are re-installed. The C2/C3 airlock rail trench cover plates are reinstalled and the C2 containment door is closed.	
Initiation: This function initiates when the C2 containment door is opened.	
Termination: This function terminates when the C2 containment door is closed.	
Parallel or sequential functions: N/A	
Applicable Modes: All modes	

Function: I.6	Transfer Empty Transfer Cart to Melter Assembly Pad
Detailed description: The receipt bay rollup door is manually opened by the operator. Door filler blocks and the MAP rail trench cover plates are removed. The rail stops are removed from position 3. The transfer cart travels north through the receipt bay rollup door and onto the MAP. The rail stops are relocated from position 4 to position 2, door filler blocks are re-installed and the receipt bay rollup door is closed. The C2 corridor rail trench cover plates are reinstalled. A general-use (non-HMH) mobile crane and/or other mobile equipment is used to transport the cart to its storage location. The rail stops are removed from position 2, and the MAP rail trench cover plates are re-installed.	
Initiation: This function initiates when the receipt bay rollup door is opened.	
Termination: This function terminates when the MAP rail trench cover plates are re-installed.	
Parallel or sequential functions: N/A	
Applicable Modes: All modes	

Function: J.1	Stage Empty Transfer Cart on Melter Assembly Pad
Detailed description: The empty transfer cart will be placed directly onto the melter assembly pad rails.	
Initiation: This function initiates when process equipped is deemed to need extraction.	
Termination: The function terminates when the empty transfer cart is stage on the melter assembly pad rails.	
Parallel or sequential functions: N/A	
Applicable Modes: All modes	

Function: J.2	Transfer Cart Travels to the C2 Corridor
Detailed description: The receipt bay rollup door is manually opened allowing the empty transfer cart to travel through. The	

transfer cart travels on the melter airlock rails to the C2 corridor.
Initiation: This function initiates when the receipt bay rollup door is opened.
Termination: This function terminates when the receipt bay rollup door is closed.
Parallel or sequential functions: N/A
Applicable Modes: All modes

Function: J.3	Transfer Cart Travels to the C2/C3 Airlock
Detailed description: The empty transfer cart travels along the melter airlock rails to the C2/C3 airlock through the C2 containment door once the architectural rollup door has been closed.	
Initiation: This function initiates when the receipt bay rollup door is closed.	
Termination: This function terminates when the transfer cart has traveled to the C2/C3 airlock.	
Parallel or sequential functions: N/A	
Applicable Modes: All modes	

Function: J.4	Melter Handling System Loads Transfer Cart
Detailed description: The transfer cart travels to the maintenance hatch in the C2/C3 area where it is loaded through the hatch from HSH equipment located on the floor above the C2/C3 airlock.	
Initiation: This function initiates when the transfer cart is located beneath the C2/C3 maintenance hatch.	
Termination: This function terminates when the transfer cart has been successfully loaded.	
Parallel or sequential functions: N/A	
Applicable Modes: All modes	

Function: J.5	Transfer Loaded Transfer Cart to C2 Corridor
Detailed description: The C2 containment door is opened to allow the loaded transfer cart to travel along the melter airlock rails to the C2 corridor.	
Initiation: This function initiates when the C2 containment door is opened.	
Termination: This function terminates when the transfer cart is in the C2 corridor.	
Parallel or sequential functions: N/A	
Applicable Modes: All modes	

Function: J.6	Transfer Loaded Transfer Cart to Melter Assembly Pad
Detailed description: The architectural rollup doors are opened once the C2 containment door is closed. The transfer cart will travel along the melter airlock rails through the architectural rollup door onto the MAP where the cart can be offloaded.	
Initiation: This function initiates when the C2 containment door is closed.	
Termination: This function terminates when the transfer cart is unloaded on the melter assembly pad.	
Parallel or sequential functions: N/A	
Applicable Modes: All modes	

Function: K.1	Remove and Reinstall Melter Overpack Closure Door
Detailed description: The C5 shield door is provided with hydraulic actuators that allow the C5 shield door, when in the fully closed position, to lift and restrain the melter overpack closure door in order to remotely separate the overpack door from the overpack. These features also facilitate remote reinstallation of the overpack door onto the overpack.	
Initiation: This function initiates when the C5 shield door is confirmed by MHJ to be fully closed.	
Termination: This function terminates when the melter overpack closure door has been placed back onto the overpack and all hydraulic cylinders on the C5 shield door are fully retracted.	
Parallel or sequential functions: N/A	
Applicable Modes: Normal Operations	

Function: L.1	C5 Shield Door Remote Recovery
Detailed description: Through wall plugs (30-PLUG-00072, 30-PLUG-00073) are aligned with recovery receivers built into C5 shield doors HMH-DOOR-00010 and HMH-DOOR-00015. The plugs interface with receivers built into the door panels, and with HSH horizontal door recovery tool (HSH-RCVY-00006). The recovery tool extends the core piece of the wall plug until it engages the door receiver. A disengagement feature built into the door drive system is actuated to decouple the door from its drive system, and the door recovery tool pulls the door into the closed position.	

Initiation: This function initiates when the C5 shield door is stuck open.
Termination: This function terminates when the C5 shield door is in the fully closed position
Parallel or sequential functions: N/A
Applicable Modes: Maintenance, DBE

Appendix C - Active Safety Instruments and Functions

Not Applicable

Appendix D - Reserved – System Procedures

Reserved

Appendix E - Reserved – System History

Reserved