This document was too large to scan as a whole document, therefore it required breaking into smaller sections.

DOCUMENT NUMBER: HW-31000

SECTION 2 OF 2

TITLE: Purex Technical Manual

DATE: 3/25/1955

ORIGINATOR:

CO: GE

RECIPIENT:

CO:

REFERENCES:

PART II: PROCESS, continued

CHAPTER X. ACID RECOVERY AND WASTE DISPOSAL

CONTENTS

Page

A. GENERAL 1002

1. Acid Recovery 1002
2. Disposal of Radioactive Wastes 1002

B. ACID RECOVERY PROCESS DESCRIPTION 1005

1. General 1005
2. Concentrators 1006
3. Acid Absorber 1008
4. Vacuum Fractionator 1011
5. Acid Rework and Recycle 1013

C. PLANT LIQUID WASTES 1014

1. General 1014
2. High-Activity Wastes 1015
3. Low-Activity Wastes 1025
4. Negligible-Activity Wastes 1028

D. PLANT GASEOUS WASTES 1029

E. LABORATORY WASTES 1034

F. DRY WASTES 1035

G. PROCEDURES 1035

1. Normal Procedure--Acid Recovery 1035
2. Detection and Remedy of Off-Standard Conditions--Acid Recovery 1040
3. Normal Procedure--Waste Disposal 1044
4. Detection and Remedy of Off-Standard Conditions--Waste Disposal 1046

REFERENCES 1047

LIST OF TABLES AND FIGURES 1049

CHAPTER X. ACID RECOVERY AND WASTE DISPOSAL

Highly radioactive aqueous waste solutions from the Purex process are disposed of by storage in underground tanks. Aqueous wastes which are only slightly radioactive are allowed to seep into the ground in specially constructed caverns. In the present chapter the disposal processes for the aqueous and also gaseous and solid wastes are discussed and the procedures outlined. The recovery of nitric acid from aqueous wastes--by distillation--before disposal is of substantial economic importance. The acid recovery process is also treated in this chapter. The conditioning of "waste" solvent for reuse has been discussed in Chapter IX. The equipment employed in acid recovery and waste disposal is described in more detail in Chapters XI and XIII, only brief functional descriptions being included in the present chapter.

A. GENERAL

1. Acid Recovery

The Purex Plant is the first separations plant constructed at Hanford with facilities provided for the recovery of the "salting" agent (nitric acid) used in the solvent-extraction operations. More than 80% of the nitric acid present in the aqueous waste streams from the solvent-extraction batteries is reclaimed in reuseable form. By recovering the nitric acid salting agent instead of neutralizing it and routing the resulting neutralized waste to underground storage, appreciable caustic and waste storage savings are achieved. At HW #3 Flowsheet processing conditions, about 5000 pounds of nitric acid, worth approximately $180, are recovered for each ton of uranium processed in the Plant. To neutralize this acid, approximately 3200 lb. of NaOH, worth $130, and 1200 gallons of waste storage space, worth $500, would be required. Therefore, for each ton of uranium processed in the Plant, chemical and waste storage savings of approximately $800 are realized by use of the nitric acid recovery facilities. For an annual processing rate of 2880 tons of uranium per year (10 tons per day at an 80% operating time efficiency) the above savings total approximately $2,300,000.

Recovery of nitric acid from the solvent-extraction wastes is achieved by evaporating the wastes until an appreciable portion of the nitric acid is distilled. The nitric acid vapors are then fractionated to produce 50 to 60% wt. per cent nitric acid suitable for use within the Purex Plant.

2. Disposal of Radioactive Wastes

The radioactive wastes from the Purex Plant are treated and disposed of so that they do not cause a hazardous pollution of the environs of the Hanford Atomic Products Operation. Liquid wastes, such as solvent-extraction column wastes which contain appreciable quantities of radiomaterials,

are stored, after concentration and nitric acid recovery, in large underground tanks. Liquid wastes, such as steam and process condensates which contain only trace quantities of radiomaterials, are discarded into caverns* from which the water percolates into the ground with the accompanying sorption of residual radiomaterials by the soil. Process cooling water, which is not normally contaminated, is continuously monitored to detect possible equipment failure and is then discharged to a swamp, from which it seeps into the ground or is evaporated. Gaseous wastes are treated to remove radioactive iodine and particulate matter. The radioactive noble gases (xenon, krypton) are discharged to the atmosphere where they are diluted to a safely low concentration.

The waste disposal techniques currently in use are under constant study with the objectives of determining the course of radiomaterials already released, developing new methods which minimize the quantities of radiomaterials released, and of minimizing the cost of waste disposal.

The following table, based upon processing of 90-day-"cooled", 600-MWD/ton uranium at a 10 ton per day processing rate, presents composite data on the Purex-Plant liquid wastes. A more detailed listing of the waste volumes, compositions, and disposal methods for the various Purex wastes is given in Tables X-1 and X-2.

Type of Waste	Volume, Gal./Day	Curies/Gal.	Disposal Method
Concentrated, neutralized, high-activity process waste (except coating waste)	4480	560 gamma, 1300 beta	Underground storage tanks
Dissolver coating waste	2400	0.2	Underground storage tanks
Low-activity wastes (e.g., process condensate, steam condensate, Waste Tank Farm condensate, Vacuum Fract. Barometric Condenser tail water)	1,500,000	0 to 10^{-2}	Caverns
Cooling water	5,000,000	0 to 10^{-7}	East Area Swamp
Sanitary wastes	---	---	Tile field
Chemical sewer wastes	---	---	Tile field

*) The word cavern has recently been introduced to H.A.P.O. terminology for the purpose of distinguishing between a cavern (large gravel pit, earth covered; or covered vault, bottom open to ground) and a crib (buried box or horizontal pipe, often tile filled).

For each ten tons of uranium processed, approximately 4500 gallons of concentrated, neutralized waste are routed to underground storage. These wastes are "self-concentrated" (i.e., partially evaporated by the heat of radioactive decay) until the wastes are reduced to a permanent storage volume of 1200 gallons or less; the extent of self-concentration permitted is determined by the temperature profile and boiling characteristics of each tank. Assuming product losses of 1.25%, approximately 250 lb. of uranium and the plutonium associated with it accompany this waste.

The coating wastes from 10 tons of uranium are contained in about 2400 gallons of solution and are stored separately. Since they contain insufficient radioactivity to sustain self-concentration, these wastes may be transferred to existing low-cost storage tanks or routed to the ground after scavenging by techniques currently being developed.

Daily, a total of 1,500,000 and 5,000,000 gallons of liquid waste are discharged to the caverns and swamp, respectively. For a 2880-ton U/year production rate, an estimated 80 gamma curies of activity and 130 g. of plutonium are sent to the caverns.

In the following table, the sources of the Purex-Plant gaseous wastes are itemized with their approximate volumes and activities.

GASEOUS WASTES--PLANT EFFLUENT

Basis: 10 t. U/day of uranium irradiated to an integrated exposure level of 600 MWD/T (514 g. Pu/ton U) at a 5.0-MW/T pile power level and aged 90 days after irradiation.

Source	Approx. Peak Vol. Rate, Std. Cu. Ft./Min.	Estimated Total Activity/Day, Beta Plus Gamma Curies	Disposal
Silver Reactor effluent (3 units)	2,000	605*	To 241-A Stack via Off-Gas Filter (F-A1, etc.)
Canyon air	100,000	10^{-6}	To 241-A Stack via Ventilation Air Filters
Process and Condenser Vent Header	1,000	10^{-5}	To Canyon Air Tunnels via Off-Gas Filter (E-F1)
Solvent Treatment Vault, Recovered Acid Storage Vault, and PR Room vessel vents	550	--	To Canyon Air Tunnel
Sample Gallery	36,500	--	To local roof stack via CWS (alternate) filter
Service area	135,000	--	To local roof stack via CWS (alternate) filter
Laboratory	31,000	--	To local roof stack via CWS (alternate) filter

*) Practically all of this is beta activity attributable to the chemically inert gas krypton-85.

B. ACID RECOVERY PROCESS DESCRIPTION

1. General

The recovery of nitric acid from the aqueous waste streams in the Purex process results in a reduction in the volume of high-activity wastes which must be permanently stored in underground tanks as well as a reduction in the Plant's chemical (nitric acid and caustic) consumption. As indicated in Section A above, both of these reductions provide appreciable economic savings.

The acid recovery equipment includes two concentrators, an acid absorber, and a vacuum fractionator, together with accessory tanks and instruments. Process flow diagrams of the acid recovery and waste neutralization operations for the Purex Plant operating at HW #3 Flowsheet conditions are attached as Figures X-1, 2 and 3. Basically, nitric acid recovery is achieved by the use of a double distillation of the "hotter" Purex solvent-extraction waste and a single distillation of the "cooler" solvent-extraction wastes. The acid vapors from the concentration of the "hotter" waste (HAW) are totally condensed and combined with the "cooler" solvent-extraction wastes for a second distillation. Nitric acid is absorbed from the decontaminated dilute acid vapors from the second concentration and is vacuum fractionated to produce approximately 60 wt. per cent acid which is reused in the Plant. The concentrate from the "hot" waste evaporator is neutralized and routed to waste storage as discussed in Section C, below.

Acid recovery from the highly radioactive HAW waste stream is accomplished in the No. 1 Acid Concentrator. Here, a continuous concentration takes place producing a partially decontaminated, low-acidity overhead vapor and a high-acid concentrate (IWW) which contains essentially all the fission-product radioactivity which enters the Plant in the irradiated fuel elements. The concentrate is discharged to sampler and receiver tanks, neutralized, and sent to underground storage tanks. The overhead vapors (IWD) are condensed and combined with other low-activity streams (IAW, 2AW, 2DW) in the Acid Accumulator Tank, the composite stream (2WF) being continuously concentrated in the No. 2 Acid Concentrator. The concentrate (2WW) from this operation is routed to the Acid Recycle Tank for reuse in the process. The dilute acid overhead stream (2WD) from the concentrator is fed as a vapor to the Acid Absorber. Here, absorption occurs, producing a 30% nitric acid effluent and a low-acidity (0.01 M) decontaminated condensate suitable for discharge to caverns. The 30% acid product is charged (after sampling for radioactivity) to the Vacuum Fractionator for further concentration to produce 60% nitric acid product.*

---

*) The Vacuum Fractionator will not be available during Purex start-up operations. Until it becomes available, the stripping section of the acid absorber will be operated--thus providing both absorption and stripping operations--to produce a 60% nitric acid product from this unit operating at essentially atmospheric pressure.

The low-acidity overhead vapors from the Vacuum Fractionator are combined with raw water in a barometric condenser and the combined stream is sent to a cavern for disposal.

Two methods of handling the waste concentrate from the "cold" waste evaporator (2WW) have been shown on Figures X-1, X-2, X-3. For the preferred flowsheet conditions (HW #3 Flowsheet) shown on the figures, the 2WW is routed back to the Dissolvers or Centrifuge Feed Tanks (via the Acid Recycle Tank and the Waste Rework Tank), where the acid is used either to dissolve uranium or to provide the needed HAF salting strength.* This mode of operation automatically recovers any uranium and plutonium lost in the aqueous wastes from the "cooler" solvent-extraction cycles. For the alternative flowsheet conditions shown on the figures, the 2WW is routed back to the No. 1 Concentrator, where it is combined with the HAW for concentration.

2. Concentrators

2.1 Description

The No. 1 and No. 2 Concentrators (E-F6 and E-F11-1) are of a vertical-tube, thermal recirculation type, and include a seven-tray (bubble-cap) tower and a packed section for de-entrainment. Each evaporator is equipped with two vertical-tube heat-exchanger tube bundles, the pair being designed for a normal duty of 38,000,000 B.t.u./hr. Since the heat-exchange surface is subject to relatively high corrosion rates, the tube bundles have been designed to permit remote replacement.

Process liquid passes up inside the tubes of the evaporator bundles, while steam condenses on the outside of the tubes. The steam supplied to the bundles is limited at 40 lb./sq. in. gage to prevent the high-temperature nitric acid-organic reactions similar to those discussed in Chapter VII. Seal pots are used on the system to limit pressure or vacuum obtained in the concentrator. These seal pots are vented to the Air Tunnel to minimize cell contamination from seal pot "blowing".

Liquid holdup in the reboiler is about 3200 gallons, producing an average residence time of approximately 50 hours at a 60-gallon-per-hour (10 t. U/day) concentrate removal rate.

The No. 1 Acid Concentrator Condenser (E-F11-2) is a shell-and tube surface condenser located in a horizontal position at the top of the concentrator. It is designed for a duty of 25,000,000 B.t.u./hr. The No. 2 Acid Concentrator, E-F6, does not utilize a condenser as the vapor from that unit is routed as a vapor feed material to the T-F5 Acid Absorber.

---

*) At the time of writing, the effects of backcycling 2WW to the Dissolvers on the subsequent solvent-extraction column operation has not been determined. Studies are currently planned in the Hot Semiworks to demonstrate this waste back-cycling step.

The acid concentrators and condensers are identical to the uranium concentrators and condensers. More detailed descriptions of these units are given in Chapters VII and XIII.

2.2 Concentration

The Purex continuous concentration facilities and accessories are designed to recover a maximum of the acid present in the solvent-extraction waste streams without contaminating either the recovered acid or by-product condensate with entrained or volatilized fission products. As previously mentioned, the "warm" and "hot" wastes from the solvent-extraction operations are subjected to single and double distillations, respectively. The flow pattern for the acid recovery operations is described in Subsection B1, above, and is shown in Figures X-1, 2, and 3.

For a processing rate of 10 tons of uranium per day at HW #3 Flowsheet operating conditions the heat loads on the No. 1 and No. 2 Acid Concentrators will be about 4×10^6 and 17×10^6 B.t.u./hr., respectively. These values are well within the design capabilities (38×10^6 B.t.u./hr.) of the two-bundle reboiler.

The heat-transfer coefficients expected (see Chapter VII for details) in the Acid Concentrators range from 120 to 400 B.t.u./(hour)(square foot)(°F. temperature difference) at equivalent processing rates from 4.5 to 18 tons of uranium per day. At operating rates of about 10 tons U per day, a coefficient of about 300 is expected.

2.3 Prevention of rapid nitration of TBP

As discussed in Chapters IV and VII, mixtures of TBP and aqueous nitric acid solution, when heated to temperatures in excess of 140°C., react with varying degrees of vigor, depending on the exact composition and heating conditions.[18,32] At extreme conditions the reaction may proceed with disruptive violence. Large amounts of uranium, and probably also the presence of some TBP decomposition products ("red oil"), tend to promote reaction. To insure safe operation of the waste concentrators, the following operating safeguards have been incorporated in the design of the concentration equipment:

(a) Specific-gravity dip tubes have been installed in the concentrator feed tanks (Acid Recycle Tank and Acid Accumulator) to detect the presence of abnormal accumulations of solvent. After detection, the solvent may be jetted to the Utility Tank (TK-F13) for disposal.

(b) Instruments have been installed in the waste concentrators to detect overconcentration of the waste. When the boiling temperature of the waste rises from its normal range of 112° to 115°C. and reaches 130°C., an alarm is actuated, and when the temperature reaches 138°C., the steam is automatically shut off. A secondary control automatically shuts off the steam to the reboiler when the steam pressure reaches 39 lb./sq. in. gage (140°C. steam temperature).

2.4 De-entrainment

Entrained droplets of the concentrated acid solution must be removed from the overhead vapors during concentration operations in order to minimize contamination of the recovered acid by radioisotopes. The bubble-cap trays and packed section in the towers surmounting each concentrator perform this function during the concentration operation. A concentrate-to-condensate de-entrainment factor of about 10^5 is required to minimize radiation problems associated with the reuse of the recovered acid. Semiworks experiments[28] on a 6-in.-diameter pilot-plant column at superficial rates corresponding to from 3 to 20 tons U/day indicate that de-entrainment factors of about 4×10^5 should be attainable in the concentration and de-entrainment operations.

The concentration and de-entrainment equipment is designed on the premise that all fission products present in the feeds to the concentrators are non-volatile, thereby permitting the activity level in the recovered acid to be limited only by entrainment. In addition to the "spectrum" activity contributed to the recovered acid by entrainment, however, ruthenium can volatilize during acid recovery operations and thus present another major contribution to the radioactivity of the recovered acid. Although data on ruthenium volatilization from concentrated waste solutions are somewhat anomalous, laboratory and pilot-plant studies indicate that ruthenium volatilization may be a function of the following variables:

(a) The nitric acid concentration of the concentrated waste.

(b) The type of concentrator heating surface employed (e.g., hot bare surface vs. submerged coils).

(c) The length of time the concentrated waste is maintained at the boiling temperature.

(d) The concentration of other ions such as nitrite, sulfate, iron, etc. (Nitrite ion apparently inhibits ruthenium volatilization.)

Ruthenium volatilization has been encountered in laboratory concentration studies at bottoms nitric acid concentrations above 6 to 10 M, the exact volatilization-threshold HNO_3 concentration varying with boiling time and other experimental conditions. In the vertical-tube natural-recirculation evaporators employed as the Purex waste concentrators, it is believed that serious ruthenium volatilization will not be encountered at nitric acid concentrations below 8 M.

3. Acid Absorber

3.1 Description

The T-F5 Acid Absorber is an atmospheric-pressure, 15 bubble-cap tray tower. The top section, containing 7 trays, is 10 feet in diameter and the lower section is 3-1/2 feet in diameter. The reboiler is an internal, vertical-tube bundle with a large center annulus to allow thermal recirculation. This tower was originally designed to operate as an atmospheric-

pressure fractionator, producing a 60 per cent nitric acid product. Since, subsequent to the original design, excessive corrosion was encountered in a similar fractionator in the UO_3 Plant (Building 224-U) when operated at atmospheric pressure to produce 60% nitric acid, the original Purex fractionator design was modified: the original fractionator (now Acid Absorber T-F5) is now capable of operating either (a) as an atmospheric-pressure fractionator (with the reboiler heated with steam); or (b) as an absorber, not utilizing the reboiler or stripping section. When the unit is operated as an absorber, instead of producing the more corrosive 60 per cent nitric acid, it produces a 30 per cent acid stream, to be concentrated further to 60% in a vacuum fractionator being designed at the time of writing (discussed in Subsection 4, below).

Reflux to the Absorber is normally supplied by a fixed weir on the condenser which routes 25% of the gross overhead condensate (1/3 of the net condensate) back to the absorber. A demineralized-water addition line is available to provide additional reflux if required. Vapor feed enters below the 7th tray from the top.

Since any chloride ion carried overhead during waste concentration accumulates in the 15 to 25 per cent nitric acid (liquid) region of the tower, chloride purge lines have been provided on the 10th, 11th, and 12th trays from the bottom (i.e., the 2nd, 3rd, and 4th trays up from the vapor feed point). A more detailed description of the Acid Absorber is given in Chapter XIII.

3.2 Absorption

The acid (ca. 10 wt. %) vapors from the No. 2 Acid Concentrator are routed to the Acid Absorber where nitric acid is recovered as a 30 weight per cent product by an absorption (enriching) type operation involving countercurrent contact of the acid-containing vapors with a reflux stream of water. The vapor feed enters the absorber above the 8th plate from the bottom of the tower. (The seven lower plates not used when unit is operated as an absorber.) The vapors then rise through the remaining seven trays countercurrent to the reflux liquid. The nitric acid content of the vapor is lowered with each bubble-cap tray contacted, while the liquid phase becomes richer in nitric acid as it progresses downward through the tower.

3.3 Operating diagram

An operating diagram for the Acid Absorber is presented as Figure X-4. The diagram shows the course of vapor and liquid-phase composition changes in the absorber, along with the equilibrium relationships. It may also be useful in determining the effects of processing changes on effluent-stream compositions.

Figure X-4 illustrates the operating diagram for the Acid Absorber when processing 476,000 lb. of 10 weight per cent nitric acid vapors per day to produce 158,000 lb. of 30 wt. per cent product and 339,000 lb. of 0.02 wt. per cent nitric acid product condensate. For the operating conditions depicted, reflux to the top tray of the tower is controlled at 135,000 lb. per day. This reflux is supplied from two sources; the major portion (113,000 lb./day) is supplied

from the condenser while a secondary reflux flow of 22,000 lb. per day is supplied from the demineralized-water header.

The McCabe-Thiele method, discussed further in Robinson and Gilliland,[2] has been employed in calculating the operating diagram of Figure X-4. It has been assumed that the molal rates of liquid and vapor flows in the column are constant from plate to plate in the column except as changed by the addition or withdrawal of material from the column. This condition of constant molal flow (constant molal liquid and vapor rates) is hypothetically achieved if the molal latent heats of vaporization of water and nitric acid are assumed equal. Actually the latent heats of vaporization for nitric acid and water are 13,000 and 17,800 B.t.u./lb. mole, respectively. To produce the effect of making the molar latent heats equal, a modified approach is required in developing the operating diagram. Instead of using 18 as the molecular weight of water in calculating the equilibrium and operating lines, a pseudo-molecular weight of 13.2 (e.g., 18 x 13,000/17,800 = 13.2) is used in calculating all the pseudo-mole percentages shown on Figure X-4 (X and Y values).

The vapor-liquid equilibrium curve for nitric acid, at essentially atmospheric pressure, is shown as curve D-E of Figure X-4. The operating line, A-C, which indicates the relation between the composition of the vapor leaving a plate and the composition of the liquid descending from the plate next above, is obtained by a simple material balance around the unit. For the operating conditions specified above, the following operating-line equation may be developed:

$$Y_n = 0.276\ X_{n+1} + 0.0155$$

where Y_n = pseudo-mole per cent nitric acid in the vapor leaving the nth plate from the bottom of the tower;

X_{n+1} = pseudo-mole per cent nitric acid in liquid leaving the $n + 1^{th}$ plate from the bottom of the tower.

This equation is plotted on Figure X-4 as the operating line, A-C.

Employing a conventional graphical step-off on the diagram (shown by dotted lines) a requirement of between 2 and 3 theoretical plates is indicated to be required to achieve the desired fractionation. In actual practice, however, a bubble-cap tray is generally not equivalent to a theoretical tray. Consequently, in the actual Plant Acid Absorber a total of 8 bubble-cap trays is provided to achieve the required 3 theoretical plates on the assumption that the plates provide an "over-all" efficiency of about 30%. The probable conditions existing on each bubble-cap tray have been approximated, assuming a 60 per cent Murphree plate efficiency* for each

---

*) Murphree plate efficiency is defined as:

$$E^{o}_{MV} = \frac{Y_i - Y_o}{Y_i - Y_e^*}$$

where Y_i, Y_o = average composition of the vapor entering and leaving the plate, respectively; and

Y_e^* = the composition of vapor in equilibrium with liquid flowing to the plate below.

[redacted]

plate, and are shown as the solid-line steps of Figure X-4.

3.4 Chloride removal

Trace quantities of chloride ion are expected in the feed to the Absorber. This material enters the Plant as impurities in the various chemicals charged to the Plant. Since HCl is more volatile than HNO_3 in concentrated HNO_3 solutions, it is boiled up from the concentrated nitric acid solutions; since it is less volatile than nitric acid in dilute solutions, it is returned with the reflux to the middle of the tower and an accumulation of HCl takes place in the liquid in that portion of the tower where 15 to 25 per cent nitric acid occurs. Since (as discussed in Chapter XVI) appreciable corrosion of the tower would be encountered whenever the chloride ion builds up to concentrations greater than 200 to 500 p.p.m. in this concentration of nitric acid, purge lines have been installed on the tenth, eleventh, and twelfth trays from the bottom of the tower. The methods used to purge chloride from the column are discussed in G1.4, below.

4. Vacuum Fractionator

4.1 Description

The Vacuum Fractionator (T-U6) is currently being designed. Subject to firming up of the design, it is a 14-tray bubble-cap tower, eight feet in diameter and 31-1/2 feet tall. It is intended to be installed in a controlled zone outside the Building 202-A Acid Storage Vault. This fractionator is equipped with an external vertical-tube reboiler section designed for thermal recirculation. Heat to the reboiler is supplied by 40-lb./sq. in. gage steam pressure on the steam chest. The maximum heat duty for the reboiler is about 1.2×10^7 B.t.u./hr. The fractionator is operated under vacuum to reduce corrosion rates for those portions of the fractionator handling concentrated acid. An absolute pressure of 100 mm. of Hg is developed at the top of the tower by a two-stage steam jet system acting in parallel with a barometric condenser (see Figure X-2). The Vacuum Fractionator feedstock is nitric acid solution (30 wt. per cent) from the T-F5 Acid Absorber, and is introduced on the fifth plate from the bottom of the tower. Purge facilities are provided for chloride removal from plates covering the 7 to 30 per cent nitric acid composition range (6th, 7th, 8th, and 9th plates from the bottom of the tower). Demineralized water is added at the top of the tower for reflux. Additional information on the Vacuum Fractionator is presented in Chapter XIII.

4.2 Fractionation

The 30 wt. per cent acid from the Acid Absorber is monitored for radioactivity and acid content, then sent to the Vacuum Fractionator for recovery of the nitric acid as a 60 weight per cent product. The liquid feed normally enters the Vacuum Fractionator on the fifth tray (the juncture between the upper and lower sections) although alternate addition points on the 6th and 7th plates from the bottom are provided. The liquid feed is joined by the liquid descending from the plates above the feed point and the composite stream

then flows downwards to the reboiler. Here a fraction of the liquid is vaporized and rises through the tower countercurrent to the descending liquid, the balance of the liquid being withdrawn as product. The vapors leave the top of the tower and are condensed in the Barometric Condenser, E-U6-1.

4.3 Operating diagram

A McCabe-Thiele operating diagram for the Vacuum Fractionator, similar in many respects to the operating diagram presented for the Acid Absorber in B3.3, above, is presented as Figure X-5. The diagram depicts processing conditions typical of those likely to be encountered in the Vacuum Fractionator when processing ten tons of uranium daily by the HW #3 Flowsheet. The 30 weight per cent nitric acid solution from the Acid Absorber is introduced at 25 to 35°C. on the fifth tray from the bottom of the tower at a 162,000-lb./day rate. Approximately 79,000 lb./day of 60 per cent nitric acid is withdrawn from the reboiler, while 110,000 lb./day of 0.01 wt. per cent (pH approx. 2.7) condensate is routed to the barometric condenser. Demineralized water is introduced to the top tray of the tower as reflux at a rate of 27,000 lb./day.

In developing the Vacuum Fractionator operating diagram a pseudo-molecular weight of 13.2 for water was used in calculating mole percentages, for the reason previously indicated in the development of the operating diagram for the Acid Absorber in B3.3, above. The diagram may be employed to determine the composition of liquid and vapor on successive plates, and also indicates the number of plates required. The vapor-liquid equilibrium curve for nitric acid at the tower operating pressures is shown as curve G-E.

On Figure X-5 the over-all operating line for the Vacuum Fractionator is broken into two distinct lines: one operating line applying for the upper section of the tower, the other line depicting operating conditions in the lower section. The operating line for the upper section is represented by curve A-B of Figure X-5 and is represented by the equation:

$$Y_n = 0.2435\ X_{n+1} + 0.0027$$

where Y_n = the pseudo-mole per cent nitric acid in the vapor leaving the nth tray above the feed tray;

X_{n+1} = the pseudo-mole per cent nitric acid in the liquid leaving the $n + 1^{th}$ tray above the feed tray.

The lower-section operating line is represented by the curve B-D and the equation:

$$Y_m = 1.34\ X_{m+1} - 8.11$$

where Y_m = mole per cent nitric acid in the vapor leaving the mth tray above the bottom of the column;

X_{m+1} = mole per cent nitric acid in the liquid leaving the $m+1^{th}$ tray above the bottom of the column.

The heat content of the feed grossly affects the operating characteristics of a distillation tower. To account for such effects the concept of the "q" line (as discussed in Perry(1)) has been developed for use with the McCabe-Thiele diagrams. In this concept, "q" is considered to be the heat required to bring one mole of feed from inlet to feed-plate temperature and to vaporize it, divided by the molal heat of vaporization of the feed, and the slope of the "q" line becomes q/(q-1). In a compound tower such as the Vacuum Fractionator, the intersection of the upper and lower-section operating lines must fall on the "q" line. For the specific Vacuum Fractionator conditions depicted on Figure X-5, where cold liquid feed is introduced to the tower, "q" is 1.095 as indicated by line C-B.

The theoretical plate requirements for each section of the fractionator are indicated in the conventional stepwise manner for McCabe-Thiele diagrams. The figure indicates a theoretical plate requirement of slightly greater than two for either the upper or lower section. However, since each bubble-cap tray provides an "over-all" efficiency about 30% that of a theoretical tray during actual operation, 5 bubble-cap trays plus the reboiler are provided in the stripping section and 9 bubble-cap trays are provided in the rectifying section. On Figure X-5 the actual conditions existing on the various bubble-cap trays are approximated by the steps drawn in solid lines. In developing the steps shown, Murphree plate efficiencies (see B3.2 for definition) of 60% and 45% for the upper and lower sections, respectively, were assumed. (Last minute changes in the design of the fractionator have added two trays. Thus Figure X-5 should show a total of 14 trays and produce a condensate with slightly less than 0.01 weight per cent acid.)

Trace quantities of chloride ion may be introduced into the Vacuum Fractionator in the 30 per cent acid feedstock. Since the chloride ion concentrates in solutions containing about 15 to 25 per cent nitric acid at the tower operating pressures, chloride ion will accumulate at about the 6th tray from bottom. Provisions have been made to bleed material from the 6th, 7th, 8th, and 9th trays to purge the chloride ion when it has built up to a corrosive concentration (about 200 to 500 p.p.m.). The purging procedure is discussed in G1.5, below.

5. Acid Rework and Recycle

5.1 Acid recycle

For reasons of process economy, the concentrate from the No. 2 Acid Concentrator (2WW) is routed to the forepart of the process (Dissolvers or Centrifuge Catch Tank) for use as "butt" or dissolving acid instead of combining it with the HAW for concentration in the No. 1 Acid Concentrator.

Before the 2WW may be used to "butt up" dissolver solution, any TBP or TBP decomposition products (e.g., DBP or MBP) which adversely affect solvent-extraction column performance must be removed from the waste or converted to an innocuous form. In the Waste Rework Tank (TK-F8) the concentrate may be boiled for sustained periods under total reflux in order to hydrolyze the butyl phosphates present to phosphoric acid. Data[30] indicate that essentially complete hydrolysis of dissolved TBP is obtained by boiling an 8 M nitric acid solution for 10 to 15 hours under total reflux.

5.2 Acid rework

During "off-standard" periods of operation of the Plant, abnormally high concentrations of plutonium and uranium may be found in the concentrate from the No. 1 Concentrator when sampled in the Concentrate Sample Tank (TK-F15). Such off-standard wastes are routed to the Waste Rework Tank where they are boiled to hydrolyze TBP in the manner discussed for recycle acid in B5.1, above. After the hydrolysis treatment is completed, the plutonium and uranium is recovered by routing the treated concentrate to the Dissolvers or Centrifuge Catch Tank for combination with dissolver solution and reprocessing through the solvent-extraction batteries.

5.3 Waste Rework Tank

The Waste Rework Tank (TK-F8) and its Condenser (E-F9) are used for the treatment of waste concentrates which are reprocessed through the Plant. (See B5.1 and 5.2 above.) The tank is 10 feet in diameter, 9 feet 3 inches high, with a 5000-gallon capacity. It is equipped with 2-inch-diameter coils having a heat-transfer area of about 320 sq. ft. (total coil length of 520 feet) for heating or cooling the tank contents. The maximum heat duty during the heating cycle is about 3,500,000 B.t.u./hr. Chemicals may be added to the Waste Rework Tank via the Waste Rework Add Tank (TK-204), if required.

C. PLANT LIQUID WASTES

1. General

There are three distinct groups of liquid process wastes from the Purex Plant and special waste handling and disposal procedures are employed for each of these waste groups. Included in the first group are the high-activity wastes (e.g., solvent-extraction column waste concentrates) which are concentrated, neutralized and routed to underground tanks for storage (and further concentration). The second group includes the low-activity wastes which are routed to underground caverns to percolate into the soil. Included in this group are the various process and steam condensates. These wastes are routinely monitored for radioactivity to prevent the discharge of abnormally high concentrations of fission products to the soil during periods of off-standard operation. The third group consists of those wastes such as condenser and jacket cooling water

which normally contain no radioactivity but could under abnormal circumstances contain radioactive materials. These negligible-activity wastes are discharged to the 200 East Area swamp. Each of the three waste groups is discussed further below.

2. High-Activity Wastes

2.1 Definition of the problem

In the Purex Plant, the aqueous wastes from the solvent-extraction columns contain essentially all of the original feed radioactivity. They are continuously (a) routed to either the No. 1 or No. 2 Acid Concentrator, (b) composited with other wastes, and (c) concentrated to a small fraction of their original volume to recover nitric acid and to reduce the volume of waste sent to underground storage. As a result of these operations, the non-volatile components of the aqueous wastes are eventually concentrated into one stream, a bottoms concentrate of the No. 1 Concentrator (IWW). This concentrate is neutralized with caustic and the organic-treatment-column sodium carbonate waste (IOW), combined with the Feed Centrifuge slurry, and then routed to underground storage. At the Underground Storage Tank Farm, facilities are provided to permit further concentration of the stored wastes. This concentration is achieved by using the heat generated by the decay of the fission products in the stored waste.

In addition to the main neutralized waste a second "hot" waste is routed to underground storage tanks from the Plant. This waste is the alkaline solution resulting from the caustic removal of the aluminum jackets from the uranium slugs. Separate routings are provided to permit segregation of the coating wastes from the main neutralized waste, so that they may later be stored in low-cost tankage or scavenged and routed to the soil if future technology permits.

Pertinent data for all of the high-activity wastes from the Purex Plant discussed briefly above are listed in Table X-2. The weights of the major components indicated are based on an average processing rate of 8 tons U per day. Radioactivities are based on an assumed irradiation of natural uranium to an integrated exposure level of 600 MWD/T achieved by 120 days pile exposure, followed by 90 days "cooling". The wastes listed on Table X-2 are divided into four major subdivisions (according to their routings); i.e., No. 1 Acid Concentrator Feed, No. 2 Acid Concentrator Feed, Neutralizer Feed, Underground Storage Tank Feed. These, in turn, are subdivided into the individual waste stream components. Process flow diagrams for the high-activity waste portion of the Plant are shown on Figures X-1, 2, and 3.

2.2 Neutralization

Prior to storage in the underground tanks, the concentrated waste solution from the No. 1 Acid Concentrator (listed under Item C, Table X-2) is neutralized. Neutralization of the acidic waste is accomplished by use of 50 weight per cent caustic solution plus the sodium carbonate solution from the

organic-treatment columns (IOW). The optimum pH of the neutralized waste sent to storage is about 8 to 9, at which level (a) tank corrosion is minimized, (b) the excess salt added to the tank is small, and (c) a solution potentially suitable for future waste fission-product scavenging operations is provided. Corrosion studies[18] indicate that the pH of the neutralized wastes should be greater than 7 to minimize corrosion of the mild-steel liners in the underground storage tanks.

The major portion of the caustic or sodium carbonate employed in the neutralization step is required for the neutralization of the nitric acid in the concentrated, acidic waste (IWW). A small amount is involved in reactions with the iron and uranium salts. The major components of the IWW are neutralized according to the following reactions:

$$HNO_3 + NaOH \longrightarrow NaNO_3 + H_2O$$

$$2HNO_3 + Na_2CO_3 \longrightarrow 2NaNO_3 + CO_2 + H_2O$$

$$HNO_3 + Na_2CO_3 \longrightarrow NaNO_3 + NaHCO_3$$

$$6HNO_3 + Na_4UO_2(CO_3)_3 \longrightarrow 4NaNO_3 + 3CO_2 + UO_2(NO_3)_2 + 3H_2O$$

$$2UO_2(NO_3)_2 + 6NaOH \longrightarrow Na_2U_2O_7 + 4NaNO_3 + 3H_2O$$

$$Fe(NO_3)_3 + 3NaOH \longrightarrow Fe(OH)_3 + 3NaNO_3$$

$$Fe_2(SO_4)_3 + 6NaOH \longrightarrow 2Fe(OH)_3 + 3Na_2SO_4$$

The heat of neutralization ranges from 450 to 650 B.t.u. per gallon of neutralized waste (at 2.2 M $NaNO_3$), depending on the relative amounts of caustic and carbonate utilized.

2.3 Underground storage facilities

Volumes of wastes produced by the Purex process per ton of uranium processed are small compared to those from the older separations plants. Approximately 690 gallons of waste are routed to the underground storage tanks per ton or uranium processed (450 gallons/ton of neutralized waste and 240 gallons/ton of coating waste). Essentially all of the fission products originally present in a ton of irradiated uranium are contained in this relatively small volume of neutralized waste. Thus, the fission-product concentrations--and, hence, the heat generated per unit volume of waste by radioactive decay of the fission products--are appreciably greater than those previously encountered in other H.A.P.O. separations plants. At expected Plant processing rates the amount of heat generated in the tanks is great enough to produce boiling in the tanks and even evaporate the wastes to dryness if the operating conditions permit.

The Purex tank farm has been designed (a) to allow the stored wastes to boil, (b) to condense the resultant vapors, and (c) to achieve controlled self-concentration of the wastes. Vapors from the underground tanks are

routed through a vapor header and a de-entrainment vessel to a buried contact condenser in which vapor from the tanks is condensed by direct combination with cooling water. The combined stream is routed to underground caverns for disposal. Raw water may be metered into the storage tanks to control the degree of self-concentration effected. Facilities are provided to maintain a negative pressure on the tanks and the vapor-handling system.

2.31 Description of underground waste facilities

The 241-A Underground Storage Tank Farm, shown on a plot plan in Chapter XI, is located approximately 1500 feet northeast of the 202-A Building. A total of six million gallons of storage space is provided by six tanks.

Facilities are provided to permit the filling of each of the six tanks individually instead of cascading the tanks as in the older Hanford farms. The tanks have been built in two rows of three each, the elevation of the first tank in a row (e.g., Tank 101 or 104) being one foot higher than the second and two feet higher than the third tank. The three tanks in each row are interconnected by "trapped" seal-leg overflow lines to permit overflow to the second and third tanks in case of overfilling of the first (or second) tank. The seal legs in the overflow lines (filled by external water lines) are provided to prevent cross venting of the tanks during self-concentration operations. The second row of tanks (Tanks 104, 105, and 106) is one foot lower than the first; an overflow is provided from the last tank of the first row (Tank 103) to Tank 106, the low tank of the underground farm. Each of the tanks is constructed of reinforced concrete with mild-steel liners on the bottoms and sides. They have an inside diameter of 75 feet and a straight-side height of 32 feet 4 inches. Each tank has a capacity of 1,000,000 gallons.

In addition to the overflow lines, each tank is provided with the following:

(a) Two 3-inch stainless-steel, Schedule 10, fill lines from Diversion Box 241-A-152.

(b) One 3-inch steel, Schedule 40, water addition line.

(c) One 20-inch steel, Schedule 80, vapor line discharging through a seal loop into the 24-inch main vapor header.

(d) A pump pit. A 42-inch blanked sleeve terminates in the pit. The pit will permit installation of a pump at a later date, if required for the transfer of solution from the tank. A 4-inch steel, Schedule 80 pipe connects the pit to Diversion Box 241-A-152.

(e) A pressure indicator and alarm.

(f) A weight-factor indicator and alarm.

(g) A conductivity-type level indicator.

(h) A "T"-shaped probe for testing the consistency of the tank contents.

(i) Thermal elements located in a vertical thermowell extending through the contents of the tanks.

(j) Access manholes, spare risers, and spare pipe stubs.

In addition to the thermal elements installed within the tanks, three groups of thermocouples are installed to determine ground temperatures near the Tanks 101 and 102. (See C2.33, below.)

Shielding from the radioactivity in the tanks is provided by a one-foot-thick concrete dome on the top of each tank plus at least seven feet of earth backfill. The vapors produced by the boiling wastes discharge through a vapor collection header (between the two rows of storage tanks) to a buried de-entrainment vessel and then to the contact condensers described below. The de-entrainment vessel is a cyclone separator designed to remove entrained liquid carried by the vapor if violent boiling or eruptions occur in the tanks. (See C2.32, below.) The de-entrainment vessel drains by gravity flow through a seal loop to Waste Storage Tank, TK-106.

The contact condensers are baffled chambers wherein the vapors directly contact the cooling water and are condensed, as in a barometric-type condenser. Vapors enter the bottom and cooling water flows in at the top. Two condensers (E-411 and E-412) are installed in parallel, each of which has sufficient capacity (15×10^6 B.t.u./hr. normal duty and 75×10^6 B.t.u./hr. peak duty) to carry the entire tank farm load. Cooling water is provided by a 6-inch line. During short emergency periods raw water may be provided through a 10-inch line connected to the 201-A Head Tank. Water flow to the condenser is controlled by both effluent temperature and vapor header pressure. The normal water flow rate of about 400 gallons per minute is controlled by the temperature of the condenser effluent water. If an abnormally high short-period boiling rate causes an increase in pressure in the boiling tank, the pressure increase is detected by a pressure-sensing element which in turn rapidly opens a valve in the water inlet line, allowing flows up to 3000 gallons per minute of water to enter the condenser. The condenser effluent is discharged to the 216-A8 Cavern after passage through a proportional sampler. Venting of the condensers is achieved by the use of two exhaust fans, a vapor de-entrainment vessel, and a stack located in the southeast corner of the tank farm. One fan is an installed spare.

Isolation and pressure protection of the equipment in the 241-A Tank Farm is provided by an elaborate seal system incorporated to maintain the waste storage tanks within their design pressure limits; viz.:

	Pressure	Vacuum
Full tanks	6.5 lb./sq. in. ga.	3.7 lb./sq. in. ga.
Empty tanks	9.1 lb./sq. in. ga.	6 in. water (gage)

The seals include the following:

(a) A 6-inch water leg is provided in the vent line from each tank to the vapor collection header.

(b) A 9-inch water leg is provided in each of the 6-inch overflow lines between tanks.

(c) A 4.2-inch water pressure and/or 6-inch water vacuum seal is provided between the vapor vent header and a 24-inch emergency relief header connecting directly to the tank farm stack.

(d) A 48-inch water isolation seal is installed between the vapor header and each of the contact condensers. This seal is employed only when condenser maintenance is required.

Diversion boxes permit the diversion of waste solutions to desired connecting lines through jumper connections and include "stubbed off" connections which permit routing of solutions to future facilities. Two diversion boxes are incorporated in the Purex disposal system. One diversion box is designated 241-A-151 and is located adjacent to the south side of the 202-A Building; the other diversion box is designated 241-A-152 and is located adjacent to the east side of the 241-A Tank Farm.

Diversion Box 241-A-151, outside the 202-A Building, serves a number of process functions. In addition to providing connections for routing high-activity process wastes to the 241-A-152 Diversion Box, connections are provided for diverting organic waste directly to the 216-A2 Cavern system, and laboratory and cell-drain waste to the 216-A4 Cavern. Drain and wash solutions from this box are collected in the 241-A-302A Catch Tank. Diversion Box 241-A-151 has lines connecting it to the following equipment locations in the 202-A Building.

Metal Solution Tank A (TK-D3) Metal Solution Tank B (TK-D4) Metal Solution Tank C (TK-D5) Slurry Tank (TK-E1) Centrifuge Feed Tank (TK-E3)	Connections for future outside facility

Decontamination (2 lines) (TK-M1)
Neutralizer (2 lines) (TK-F16)
Coating Waste (3 lines) (TK-D2)
IOW Tank (TK-G2)
ITO Wash Collection (TK-G8)
20 Col., 2TO Wash Collection Tank (TK-R2 and TK-R8)
Utility Tank (2 lines) (TK-F13)
2TO Tanks A and B (TK-R5 and TK-R7)
ITO Tanks A and B (TK-G5 and TK-G7)
Cell Drain Collection (2 lines) (TK-F18)
Lab. Waste Receiver Tanks (2 lines) (TK-U3 and TK-U4)

The 241-A-152 Diversion Box serves to route the underground storage wastes from the 241-A-151 Diversion Box to the individual storage tanks. In addition, it provides connections for transferring waste solution from one storage tank to another tank in case a leak develops in any storage tank. The sump in this pit is syphoned to the 216-A7 Cavern in lieu of a catch tank. The sump is equipped with liquid-level instrumentation, a sampler riser, an overflow, and an automatic-sewer-type syphon.

Nineteen test wells are located among the waste storage tanks and caverns as follows:

241-A Tank Farm	5 test wells
216-A2 Organic Cavern	1 test well
216-A4 Laboratory and Cell Drain Cavern	1 test well
216-A5 Process Condensate Cavern	5 test wells
216-A6 Steam Condensate Cavern	2 test wells
216-A7 Diversion Box Drain	2 test wells
216-A8 Condensate Cooling Water Cavern	3 test wells

These wells receive no waste but are used by the Radiological Sciences Department for monitoring the migration of radioisotopes and detection of possible leaks in the waste storage tanks. In addition to their use for monitoring, these test wells and many others throughout the Hanford Area are used in a comprehensive geologic study of the area.

2.32 Self-concentration

Essentially all of the fission products originally present in a ton of irradiated uranium are contained in 500 gallons or less of neutralized waste from the Purex Plant. During storage, the fission products undergo radioactive decay with the release of beta and gamma energies which ultimately appear as heat.

The quantity of fission products present in the waste storage tanks and thus the exact rate of heat generation in the tanks is influenced by the following factors:

(a) The length of time the Purex feed "slugs" are irradiated in the piles.

(b) The power level of the reactor during the irradiation period.

(c) The "cooling" age of the waste, i.e., the elapsed time between the discharge of fuel from the pile and the introduction of the resultant wastes into the storage tank.

(d) The rate at which fission products are added to the tank. This is a function of the separations processing rate.

(e) The time required to fill the tank. In addition to being dependent upon the processing rate of the separations plant, it is dependent upon the extent of concentration of the stored waste and the tank size.

(f) The "cooling" period after the storage tanks are filled.

The effects of these variables on the rate of heat generation are shown in Figures X-6, 7, and 8. In the development of the figures, it was assumed (a) that the tank capacity is 1,000,000 gallons, and (b) that all irradiated slugs processed in the Purex Plant would be "cooled" 90 days before processing. These data are reported in the form of a heat generation index, (B.t.u./hour) per (MW/day) versus tank filling time and/or tank "cooling" time. Figures X-6, 7, and 8 are constructed for assumed irradiation times of 50, 100, and 200 days, respectively. The effects of the reactor power level (MW/ton) and separations processing rate (tons per day) are incorporated in the ordinate of the figure (B.t.u./hour per MW/day). The use of the figure is clarified by the following illustrative example. Assume that it is desired to calculate the rate of heat generation from a 10^6-gallon waste storage tank that is subjected to the following set of operating conditions:

Pile power level	= 6 megawatts/ton
Integrated exposure	= 600 megawatt-days/ton
Slug "cooling" time	= 90 days
Separations processing rate	= 8 tons U/day
Waste volume (after self-concentration)	= 178 gallons/ton U processed
Cooling time after completion of fill	= 100 days

Using the above data the following values may be calculated:

$$\text{Pile irradiation time} = \frac{600\ \text{MWD/T}}{6\ \text{MW/T}} = 100\ \text{days}$$

(Since Figure X-7 is based on a 100-day irradiation time, it is used with this problem.)

Waste discharge rate = 178 gal./ton x 8 tons/day = 1425 gal./day

Tank fill time = 10^6 gal./1425 = 700 days

Figure X-7 indicates the heat generation rate will be 1.8 x 10^5 B.t.u./hr. per MW/day at the completion of the filling (700-day fill time). The value will decrease to 1 x 10^5 (B.t.u./hr.)/(MW/day) after an additional 100-day "cooling" period. These values must be multiplied by the power addition rate to the tank in order to obtain the heat generation rate in B.t.u./hr. For this case,

Power addition rate = Pile power level x Separations processing rate

= 6 MW/ton x 8 tons/day = 48 MW/day

Therefore, the heat generation rate is

$$1.8 \times 10^5 \frac{\text{B.t.u./hr.}}{\text{MW/D}} \times 48 \text{ MW/D} = 8.6 \times 10^6 \text{ B.t.u./hr.}$$

and after 100 days further "cooling" is

$$1 \times 10^5 \frac{\text{B.t.u./hr.}}{\text{MW/D}} \times 48 \text{ MW/D} = 4.8 \times 10^6 \text{ B.t.u./hr.}$$

This quantity of heat is sufficient to make the contents of the tanks boil--in fact, it is more than sufficient to concentrate the wastes to complete dryness if water were not added to replace the effluent vapor. The tank contents continues to boil until the rate of heat evolution is equal to, or less than, losses from the tank to the ground (estimated to be of the order of 300,000 to 500,000 B.t.u./hr.). For the base conditions of the example, a seven-year "cooling" period is required before the heat-generation rate decreases to the 500,000 B.t.u./hr. range.

Neutralized wastes undergoing self-concentration produce water vapor at a varying rate, with peak rates of evaporation in the range of five times the average evaporation rate. These periods of rapid boiling are associated with pressure surges in the tank, known as "bumping", and an increase in the amount of radioactive solution entrained in the vapors. The cause of the accelerated boiling is postulated to involve one or both of two mechanisms. By one mechanism, the tank contents are postulated to be heated so gradually that superheating of the supernatant liquid occurs, with the sizeable reservoir of superheat later being utilized for rapid evaporation. In the other mechanism, a salt cake is postulated to be formed and partially dried by the heat of radioactive decay of its included fission products, thereby creating a heat reservoir in the form of high-temperature solids; the subsequent cracking of this salt cake brings the supernatant liquid into intimate contact with the heat source, thereby causing the rapid boiling. In the Redox system, the frequency of bumping was found to be minimized by neutralizing the wastes with a 5 to 7 % stoichiometric excess of sodium hydroxide. It is postulated that a greater excess of caustic increased the bumping frequency by the first mechanism, while a smaller excess of caustic increased the quantity of precipitate and thereby increased the bumping frequency by the second mechanism. Studies of the heating and bumping characteristics of the Purex wastes are scheduled to be made in the Hot Semiworks.

The allowable degree of self-concentration of neutralized wastes and/or coating waste produced under HW #3 Flowsheet conditions has not been completely defined. A synthetic waste of the composition produced by combining the coating removal waste and neutralized aqueous waste from HW #1 Flowsheet[9] was experimentally concentrated.[12] The solid and liquid fractions of the concentrate at various concentration factors are as follows:

Concentration Factor(a)	Sodium Nitrate M(b)	Solids in Conc. Waste,(c) Vol. %	Liquid in Conc. Waste,(c) Vol. %
2.1	10.4	9	91
2.2	10.9	13	87
2.4	12	35	65
5	24.9	98	2

Notes: (a) (Original volume)/(Final volume).

(b) Calculated assuming a one-phase homogeneous solution.

(c) At room temperature.

Although these experiments were carried out under HW #1 Flowsheet conditions, the composite waste which would be produced under HW #3 Flowsheet conditions is very similar, albeit more dilute as indicated in the following tabulation.

	Concentration in Waste, M			
	Coating Removal Plus Neutralized IWW Wastes			
Component	HW #1 Flowsheet	HW #3 Flowsheet	Neutralized IWW, HW #3 Flowsheet	Coating Waste, HW #3 Flowsheet
$NaAlO_2$	0.63	0.41		1.2
NaOH	0.62	0.37	0.03	1.0
$NaNO_3$	3.00	1.44	1.9	0.6
$NaNO_2$	0.46	0.31		0.9
$Fe(OH)_3$	0.04	0.023	0.035	
Na_2SiO_3	0.01	0.007		0.02
$Na_2U_2O_7$	0.006	0.0065	0.01	
Na_2SO_4	0.12	0.045	0.07	
Total Na^+	4.98	2.65	2.09	3.72

Disregarding small amounts of insoluble materials such as $Fe(OH)_3$, these data imply that Purex wastes may be concentrated to at least an 8 M sodium ion concentration (the solubility of $NaNO_3$ at room temperatures) before additional solids start to appear. If the criterion of no additional solids production above those in the waste when it is discharged from the plant is imposed, the combined HW #3 Flowsheet coating removal plus neutralized waste may be concentrated by a factor of 3.0 (to 230 gallons per ton of U). Neutralized waste alone may be concentrated by a factor of 3.8 (to 120 gallons per ton of U), while coating waste might be concentrated by a factor of 2.2 (to 110 gallons per ton of U) before an 8 M sodium ion concentration is achieved.

At the present time, studies are being made to determine whether coating removal wastes might be scavenged with fission-product-absorbing clays and

discharged directly to caverns. If such studies demonstrate the feasibility of coating-waste cribbing, appreciable savings in Purex waste storage costs may be achieved. Therefore, coating wastes and neutralized wastes from the Purex Plant are stored separately--at least until more experimental data are obtained concerning the physical properties of the individual and combined waste streams. At a later date, if coating-waste scavenging proves unattractive, coating waste may be combined with the boiling, neutralized IWW and thus concentrated; or it could be transferred to C Farm for storage in storage space made available by the metal recovery operations.

Corrosion in the Purex waste storage tanks is expected[13] to be moderate, i.e., in the range of 10^{-5} to 10^{-4} inches per month. Maximum corrosion is expected in the metal exposed to the vapors at, or near, the liquid-vapor interface, so the liquid level in the tanks should be always maintained at as high a level as possible.

2.33 Experimental thermocouple installation

As described in C2.32, above, the rate of heat evolution from a typical waste storage tank will reach a maximum of approximately 9×10^6 B.t.u./hr. (depending on Plant processing rates and conditions) and then gradually decline to lower values. Boiling will continue until the heat evolved during fission-product decay is equal to or less than the heat loss to the tank environs. The ground losses and, hence, the time at which boiling will cease may be estimated from accurate measurements of the temperature gradients near the tanks.

An extensive thermocouple installation is provided in the 241-A Tank Farm for measurement of ground-temperature gradients adjacent to the tanks and measurement of high temperature points ("hot spots") within the tanks. Four groups of thermocouples are available for these measurements. One group of four thermocouples is located in the quadrangle between Tanks 101, 102, 104, and 105 and beneath the horizontal plane of the bottoms of the tanks. Two other similar groups are located adjacent to Tanks 101 and 102. Additional thermocouples are installed directly beneath Tank 101. The location of each of these thermocouple groups is shown in Figure X-9.

Temperature gradients within Tank 101 are determined by a group of ten thermocouples installed in pipes fastened to the inside bottom of Tank 101 (see Figure X-9). These thermocouples detect the formation of local high concentrations of fission products by their effect on temperature gradients within the tank and on the tank walls. Although it is extremely unlikely that such "hot spots" would produce temperatures high enough to injure the tank, immediate detection would permit countermeasures to be taken which would avoid such circumstances (see G4.1, below).

Additional temperature measurements may be made by inserting a thermal element in the vertical thermowell which extends through the liquid contents in each of the tanks. The tanks are designed for operating at temperatures of 600°F., if necessary, and could probably operate at temperatures as high as 900°F. without danger of rupture from thermal stresses.

3. Low-Activity Wastes

3.1 Definition of problem

Approximately 1,500,000 gallons of liquid waste containing only trace quantities of radiomaterials are discharged from the Purex Plant daily. These wastes are primarily process and steam condensates. The source, volume, plutonium and radioisotope content of these streams are listed on Table X-1.

These wastes are routed to the soil via seven underground, rock-filled caverns. Streams to all caverns are monitored for radioactivity. Radiation monitoring is achieved either by batch sampling in the 202-A Building or by use of proportional samplers of continuously flowing streams. Piping to the caverns is by direct-buried, cathodically protected, Schedule 40 stainless steel pipe.

3.2 Technical background

3.21 Basis for selection of disposal method

The cavern method of disposal of low-activity wastes is a convenient expedient for the operation of the Purex Plant. This method of disposal is contingent on two factors: (a) absorption of a large fraction of the radiomaterials by the subsoils; (b) monitoring the disposal site (by test wells) to insure that radioactive materials with half lives of more than three years do not reach the ground water. Subsoil experiments have indicated that materials penetrate the subsoil in the following order (at least in the valence state normally encountered in wastes): (a) nitrate ions, (b) ruthenium, (c) cesium, (d) plutonium, and (e) strontium. The absence of high salt, acid, or base content in a given stream permit its so-called "unlimited" disposal to the Purex caverns. That is, the radioisotope and/or plutonium concentration in the wastes discharged to the caverns will not be subject to a prescribed upper limit. In lieu of such restrictions, constant monitoring of the seepage from the caverns traces the path of the specific isotopes. The waste stream under survey is switched to a new cavern before the objectionable isotopes reach the ground water table.

In contrast to the Purex "unlimited" caverns, other caverns in the 200 Areas are of the "limited" type. That is, only a certain quantity (usually specified as gallons per square foot of cavern area) of the particular type waste may be discharged to the cavern. The cavern capacity is established by tests which determine the retention capacity of the soil beneath the cavern for the undesirable isotopes. The results of these tests are then used to calculate the cavern capacity.

The ultimate aim of the Plant is to produce wastes whose activity is equal to or less than the maximum permissible concentrations (MPC) in drinking water; i.e.,

Plutonium	0.024 micrograms/liter
Beta emitters	0.10 microcuries/liter

The drinking water tolerances listed above are in a state of review at the present time. Consequently, the values quoted are subject to revision.

3.22 Course of caverned wastes

As previously indicated, the cavern method of low-radioactivity waste disposal is contingent on the wastes not reaching the rivers or ground water adjacent to H.A.P.O.--at least until after the undesirable radioisotopes have decayed to unobjectionable levels. Fortunately, the H.A.P.O. environs are such that a long period of time elapses before waste material discharged to ground leaves the project area. A brief description of the geology of the region follows:

The Hanford Atomic Products Operation lies in a structural and topographic basin west of the southward-flowing Columbia River, which flows through the basin. The project is bordered on the west by the east-west to northwest-trending basaltic ridges of the Rattlesnake Hills, Yakima Range, and Umtanum Ridge; on the north by the Wahluke Slope rising gently to the precipitous Saddle Mountains; and on the east by the gently westward-dipping basaltic lava plateau, covered near the project by more than 1000 feet of later sediments now exposed as cliffs on the east side of the Columbia River. The natural drainage basin for the project slopes to the east; thus both the infrequent surface runoff and the vastly greater underground, or ground water, runoff move across the project site and eventually into the Columbia River. The chief formations underlying the two areas are of four types:

(a) Yakima basalt, a dense rock of volcanic origin during the Miocene Age, is the deepest formation investigated at or near the water table, approximately 300 to 400 feet below grade. The basalt is folded and locally faulted, resulting in a slightly-to-moderately permeable layer.

(b) The Ringold formation, a sedimentary layer, laid down prior to the last period of glaciation of the Ice Age. Although these sediments accumulated to a level approximately 1000 feet above present sea level, later changes in the course of the Columbia River stripped away and reworked the formation. The Ringold formation is currently about 50 feet thick.

(c) A thick series of coarse terrace gravels containing some reworked Ringold sediments deposited by the action of the eroding and degrading river upon those areas of basalt from which the Ringold formation was removed.

(d) A deposit of fine-grained sediments known as the Touchet Beds laid down over the exposed areas by a rise in the base level of the Columbia River. A later removal of the cause for the higher base level then permitted the Columbia River to rapidly and thoroughly remove most of the unconsolidated Touchet sediments from the project area.

The geologic history of the region was completed with the deposition of loess (wind-reworked and wind-deposited silt and fine sand) and the formation of sand dunes.

The water table before inception of Hanford Operations was inferred to have a slope of about 65 feet in a distance of 75,000 to 80,000 feet toward the west, and a slope of about 40 feet in a distance of 30,000 feet toward the north. The disposal of large quantities of water in the 200 Areas has changed the water table quite severely. Currently, three definite mounds or hills of water (two in 200-West and one in 200-East Areas) have been built up on the surface of the water table due to the inability of the gravels to conduct all of the water away from the disposal site. With the start of Purex, about 5,000,000 to 10,000,000 gallons per day will be disposed of to the south of the present B-Plant swamp. This will enlarge the mound and may in time force a northward movement of water between the two mounds. This is not desirable because of the permeable gravels and relatively short distance to the river which exist in this direction. Rough estimates of the time for water to move from the east edge of the present 200-E mound to the river (under present conditions) are on the order of 50 to 100 years. This value provides a minimum decay factor of 60,000 to 100,000 for any radioisotope with a half life equal to or less than 3 years.

Many of the radioisotopes, particularly at the low concentrations of the element found in wastes, are adsorbed by the soil through which the wastes pass. There appears to be general agreement that the bulk of the material is removed by ion exchange, particularly by the morillinite clays that make up 1 to 10% of the soil, depending upon the portion of the soil profile. The ion-exchange process is affected by many variables; but the ones of most importance in soil work, other than the nature of the ion, appear to be the concentration of the ion in question, the salt content of the liquor, and perhaps the pH of the solution. The quantitative aspects of this portion of the problem are now under investigation by the Earth Sciences Unit of the Radiological Sciences Department.

3.23 Description of caverns

Seven caverns are incorporated in the Purex waste-disposal system for subsoil disposal of effluent streams which may contain low concentrations of radioisotopes. At design rates, approximately 1.5×10^6 gallons per day will be discharged to the caverns. The caverns are below grade and are filled to a minimum depth of seven feet with coarse (3-inch or larger) aggregate below the distribution header. Distribution is accomplished by tile headers sized to handle the required flow and to distribute it evenly over the entire cavern area. The following is a list of the Purex caverns, their approximate size, and location.

Cavern	Service	Design Basis, Gal./Min.	Approximate Size*, Ft.	Approx. Location
216-A1	(Abandoned)		20 x 20	
216-A2	Organic waste	75	20 x 20	200 ft. south of 202-A
216-A4	Lab. waste and cell drain	75, intermittent	20 x 20	100 ft. south of 291-A
216-A5	Process condensate	140	35 x 35	South of west end of 202-A
216-A6	Steam condensate	1150	100 x 100	1000 ft. east of 202-A
216-A7	152-A Diversion Box drain	intermittent	11 x 11	200 ft. east of 152-A
216-A8	Waste tank condenser disposal	400 to 3000 max.	20 x 880	700 ft. north-east of 241-A
216-A9	203-A drainage and Barometric Condenser tail water	400	30 x 200	200 ft. north of 203-A

*) Current soil percolation tests may reveal that these sizes should be increased.

The 216-A5, 6, 8, and 9 caverns are equipped with proportional sampler units for routine analysis. Discharges to the 216-A2, 4, and 7 caverns are controlled by batch sampling.

Trace quantities of nitric acid in the process condensate are removed by routing the condensate through a calcium carbonate neutralizer (216-A-TK-1) prior to disposal in the A5 Cavern. The calcium carbonate neutralizer is similar to those employed in the U.R. Plant and utilizes a percolation through the limestone bed for continuous neutralization of low-acidity streams.

4. Negligible-Activity Wastes

Negligible-activity wastes from the Purex Plant may be segregated into two types; i.e., chemical sewer and process-vessel cooling water wastes. The chemical sewers drain all non-radioactive Plant areas, such as operating galleries, service areas, aqueous make-up areas, etc. Process cooling-water waste is composed of the raw water employed in process equipment for cooling and general utility purposes.

The cooling water and chemical sewer wastes from the Purex Plant are disposed of in an open ditch or swamp located to the northeast of 202-A. The swamp is approximately 4500 feet long. Approximately 5,000,000 gallons will be discharged daily. Swamp disposal is utilized because of the large volumes involved and because the radioactive contamination will be low enough to permit this type of disposal. (The cooling water from the 2EU Concentrator Condenser is diverted to the steam condensate header to provide cooling of the steam condensate below the boiling point.)

Chemical sewer wastes are collected in a 12-inch vitrified-clay pipe header on the north side of the building and then disposed of to the main 202-A swamp (northeast of the 202-A Building).

The process cooling water wastes discharge through branch lines which pass through the south wall of the canyon building and enter a 30-inch buried collection header running parallel to the building. The header discharges into a cooling water pump pit located east of the 202-A Building. Temperature elements and a scintillation (radiation monitoring) probe are located in this line, upstream from the pump pit. High-activity levels sound an alarm in the 202-A Central Control Room and automatically shut down the pumps. The pump pit also contains a continuous proportional-sample unit for metering flow and from which samples are taken for periodic analytical determination. Two pumps, each rated at 1200 gallons per minute, pump a portion of the total flow into the 201-A water storage tank (used to supply the contact condensers at the tank farm) and pump the balance of the flow through a 30-inch vitrified-clay line to the swamp.

D. PLANT GASEOUS WASTES

Gaseous wastes are discharged to the atmosphere from the Purex Plant and consist of Canyon and cell ventilation air, air from the equipment vent headers, and gaseous products formed as a result of process operations. These gases contain quantities of volatile and entrained radioactive materials which, if liberated to the atmosphere without dilution, would create a personnel hazard in the Plant vicinity. The filtration of these objectionable materials is discussed here. The removal of radioiodine in the Silver Reactors is discussed briefly here and in more detail in Chapter III, and a description of the equipment involved is presented in Chapter XI.

1. Definition of the Problem

The gaseous wastes from the Purex facility contain entrained radioactive particles and volatile radioactive materials such as iodine-131, xenon-129 and 131, and krypton-85. The xenon and krypton are noble gases and, provided they are diluted sufficiently, do not create a radiological hazard to plant or animal life. Radioiodine-131, however, tends to be absorbed and concentrated in animal tissue, and the quantities released to the atmosphere must be strictly controlled to prevent personnel damage. Approximately one half of the radioiodine in the fuel elements is volatilized during dissolution, and small amounts are volatilized at other points in the process. Non-volatile fission products associated with particles of solids or liquid are also entrained in

the gaseous wastes. These entrained particles may be composed of any or all of the process materials and are carried on the mist arising from jet or centrifuge operation, dust, or particles of rust or dried salts. If these particles were released to the atmosphere, they would be potentially hazardous through ingestion with the air breathed or via food or water consumed, or by direct irradiation of personnel in its proximity. See Chapter XXII for further details.

In the Purex facility, radioactive materials are either removed from the gaseous wastes by chemical reaction (radioiodine) or filtration (particulate matter), or, in the case of the noble gases, diluted to an innocuous concentration. A summary of the volumes of gaseous wastes and the quantities of radioactivity exhausted to the atmosphere is presented in A2, above. It will be noted that virtually all of the radioactivity liberated is associated with the noble gas krypton-85.

2. Technical Background

2.1 Iodine removal by Silver Reactors

Although radioiodine-131 has a relatively short half life (approximately 8 days), it is potentially the most hazardous gas evolved during uranium dissolution because of its tendency to concentrate in plant and animal tissues. When processing 10 tons per day of 90-day "cooled" fuel elements after irradiation at 5 MW/T, approximately 300 beta plus gamma curies of radioiodine are volatilized daily in the Purex equipment; this quantity is approximately proportional to the MW/T irradiation level, and doubles with each 8-day decrease in "cooling" time (see Chapter II for details). The Purex Plant is provided with Silver Reactors for the removal of iodine from the gaseous wastes in the dissolver, condenser, and process-vessel vent systems and less than 0.1% of the radioiodine volatilized escapes to the atmosphere.

The Silver Reactors are vertical towers, 4-1/2 feet in diameter by 10-1/2 feet tall, packed with 1/2-inch ceramic Intalox saddles coated with silver nitrate. Process gases entering the reactor are heated in a shell-and-finned-tube heat exchanger with steam at 185 lb. per sq. in. applied to the tubes. Steam discharge from the heater tubes passes through an external coil on the Silver Reactor tower. High-pressure steam promises to be a more reliable source of heat than the electrical units currently in use in other plants.

The exact iodine removal mechanism is not known with surety but may be represented by the usual iodine reaction in the presence of an excess of silver nitrate.

$$6\ AgNO_3 + 3\ I_2 + 3H_2O \longrightarrow 5\ AgI + AgIO_3 + 6\ HNO_3$$

There may be some $AgNO_3$ decomposition under operating conditions so that the following series of reactions can occur to a limited degree:

$$2\ AgNO_3 \longrightarrow 2\ AgNO_2 + O_2 \longrightarrow 2\ Ag + 2\ NO_2 + O_2$$

$$2\ Ag + I_2 \longrightarrow 2\ AgI$$

[redacted] [redacted]

A properly maintained and operated Silver Reactor removes iodine from the gas streams very efficiently, with H.T.U.'s in the magnitude of one inch being obtained in small experimental units and less than one foot in plant installations. While theory predicts that the gas-film H.T.U. decreases with decreasing gas rate, the high efficiencies obtained in the experimental units to date have masked any effects of this variable. The Plant units operate at a nominal peak gas flow rate of about 2.1 ft./sec. for the dissolver off-gas units, and about 1 ft./sec. for the condenser-vessel vent unit. The efficiency of a Silver Reactor is highly dependent on the surface area of silver available for the reaction, and any maloperation which limits this area (such as excessive temperatures causing the silver nitrate to melt and drain off the packing, or poor regeneration techniques which fail to coat the packing surfaces) can sharply reduce the iodine-removal efficiency of the unit.

The optimum operating temperature for the reactor is about 300 to 425°F.(8) Below 220°F. nitric acid and water condense and remove silver nitrate by dissolution, while the upper allowable temperature is fixed by the melting point of silver nitrate at 413°F. With 185-lb./sq. in. gage steam pressure on the heat exchanger, the gas temperature will be about 300 to 325°F.

A more detailed description of the chemistry and procedures involved is presented in Chapter III.

2.2 Filtration of gases from equipment vents

Gaseous wastes are removed from the Purex-Plant process vessels by five individual headers which are maintained under vacuum by steam/air jets. This header system is provided to maintain all cells as free as possible of process gases and radioactive particulate matter.

Each stream passes successively through a condenser, heater, silver reactor, and fiber-glass filter, with the vessel and condenser vent gases being combined before treatment. The following table lists the five sources of gaseous wastes and their respective disposal facilities.

Source	Condenser	Heater	Silver Reactor	Filter
Dissolver TK-A3	T-A3-1*	E-A2	T-A2	F-A1
Dissolver TK-B3	T-B3-1*	E-B2	T-B2	F-B1
Dissolver TK-C3	T-C3-1*	E-C2	T-C2	F-C1
Vessel vent	E-F1	E-F2	T-F2	F-F1
Condenser vent	E-F1	E-F2	T-F2	F-F1

*) Discharge gases from these vessels pass through individual de-entrainment towers before entering the off-gas heater.

The operation of the Dissolvers during charging, jacket removal, and dissolution operations produce off-gases which are composed of leakage air, ammonia in air, and nitrogen oxides in air, successively. While ammonia, water, and nitrogen oxides would react on contact to form ammonium nitrate, this reaction does not occur in the heaters and filters because the off-gases

from each dissolver are treated successively and independently. The formation of ammonium nitrate in the stack is possible, and wash-down facilities are provided in the stack to minimize accumulation and subsequent discharge of such crystals.

2.3 Filtration of ventilation air

Prior to disposal to the atmosphere, ventilation air exhausting from the Purex Air Tunnel is passed through a Fiberglas filter for removal of radioactive particulate matter. Fibrous-glass filters were selected in preference to sand on the basis of studies(19) which revealed that the collection efficiency of fibrous-glass filters is superior to sand filters (99.9% compared to 99.5%).

The basic assumption underlying the theory of mechanical filtration(7) requires that a particle contact a fiber, or other object, before it will adhere. There are three mechanisms by which dispersed particles may come into contact with the fibers in a filter bed. The first of these is "Grundabscheidung" or direct interception. The second is impingement, differentiated from Grundabscheidung by effects which cause the particulate matter to deviate from the streamline flow of the gas to travel nearer the fiber, thereby increasing its chances of contact. The third mechanism by which air-borne particles may come into contact with a surface involves Brownian movement by which the paths traveled by very small particles assume a random character within the general flow lines of the gas stream. In addition to the above mechanisms, gravity settling augments the removal of relatively large particulate matter. The design of the filter is described in C3.2 of this chapter and in Chapter XI.

2.4 Disposal of gaseous wastes through stack

The gaseous wastes discarded to the atmosphere contain essentially no radioactive particulate matter and little radioiodine. As shown in Table X-2, the radiokrypton and the small amounts of radioxenon discharged represent approximately 600 curies per day. This radioactivity must be diluted to a concentration of 2×10^{-6} microcuries per milliliter or less before reaching ground level to provide a safe atmosphere for Plant personnel. Partial dilution (to 1.5×10^{-3} μc./ml.) is achieved when the Dissolver off-gases are mixed with the 100,000 cu. ft./min. of ventilation air discharged from the stack. An additional 750-fold dilution (to 2×10^{-6} microcuries/ml.) is required before the gases are safe for breathing by the operating personnel in the Plant. Under unfavorable weather conditions (e.g., no wind, downdraft, or fog) when the dilution ratio is less that 700 to 800, dissolving cannot be carried out because the dilution of the radiokrypton evolved would be insufficient. The dilution ratio is estimated from meteorological data.

2.5 Ammonia removal in dissolver off-gases

Normal Purex Dissolver operation includes the removal of the aluminum slug jackets, prior to a two- or three-cut uranium dissolution. The

Dissolver off-gases during the jacket removal operations contain ammonia, while during slug dissolution operations, the off-gases contain nitric acid and/or nitrogen oxides. Consequently, the simultaneous operation of two Dissolvers, one on slug jacket removal and the other on uranium dissolution, discharges both ammonia and nitric acid to the stack. These materials may combine in the stack to form ammonium nitrate in large porous masses which act as carriers for radioiosotopes present. Eventually these masses may be carried out with the stack gases and deposited on the surroundings, causing a radiation hazard. (Redox experience has shown that these masses may exhibit radiation rates of 300 to 500 mreps/hr.)

Plans have been made to break this chain of events, if required, by the passage of each Dissolver off-gas stream through a separate ammonia scrubber. The ammonia scrubbers would be located (process-wise) between the De-dentrainment Towers, T-A3-2, and Off-Gas Heaters, E-A2. The ammonia scrubbers would be about 2-1/2 feet in diameter and 7 feet high and contain three bubble-cap trays. Demineralized water would be used as a scrubbing agent. The ammonia scrubbing process is discussed in more detail in Chapter III.

3. Disposal Facilities

3.1 Fiberglas filters on equipment vents

The four Fiberglas filters employed for the filtration of the process off-gases are identical in design. Each is designed so that an entire unit is disposable when replacement is required. Each filter is a vessel nine feet in diameter and six feet high; gases enter at the bottom and discharge at the top. The filters are packed as described below, the layers being numbered from the bottom to the top.

Layer	Fiberglas Type	Density, Lb./Cu. Ft.	Thickness, Inches
1	115K	1.5	12
2	115K	3.0	6
3	115K	6.0	12
4	AA	1.2	1

These filters have a filtration efficiency greater than 99.98%. At normal operating conditions, the Dissolver Off-Gas Filters have a calculated pressure drop of about 1 to 1-1/2 inches of water, and the vessel-condenser vent filter about 4 to 5 inches of water.

3.2 Fiberglas filters and stack

A brief description of the Fiberglas filter and stack used for the disposal of the Canyon air waste is given here, with a more detailed description of this equipment being presented in Chapter XI. The Fiberglas filter has over-all dimensions of 83 ft. x 53 ft. x 15 ft. and is divided into two main areas. The major section, or pre-filter, is bulk-loaded with Owens-Corning Fiberglas, Type 115K, retained on stainless-steel screens. Air flows downward at 50 ft./min. through the 7-foot layer of Fiberglas which removes most of the

condensate and particulate matter. The smaller section, or clean-up filter, contains 132 American Air Filter Deep Bed Filter Units. These packaged filters, hung in racks, consist of V-shaped screens covered with a 1-inch layer of Types B and AA Fiberglas. Air flows upward at 20 ft./min. through these units for final clean-up. The Fiberglas filter is designed for an initial pressure drop of 4 inches of water and is limited to a pressure drop of 8 to 9 inches of water by the characteristics of the fans moving the air.

The air is pulled through the filter by four motor-driven, stainless-steel exhaust fans installed in parallel in the exhaust plenum. Three fans are driven by electric motors through belt drives and have a capacity of 42,000 cu. ft./min. each, at 15 inches of water. The fourth fan is a standby unit and is sized for 63,000 cu. ft./min. at 9 inches of water static differential. Power to this standby unit is provided by a direct-driven steam turbine. The fans are designed for contact removal or maintenance. A high-level alarm and a recorder are provided for the bearing temperatures. Plexiglas inspection ports are provided at the individual fan, on-off dampers and at the main modulating control damper.

The stack (291-A) is a 200-foot (above grade) concrete structure containing a free-standing stainless-steel liner sized for an air velocity of 3500 ft./min. Dissolver off-gas lines enter near the base of the stack liner. Three spare entry stubs extend from the liner for future connections. A duct stub connection for the future addition of a second stack is provided. An extensive wash-down and sampling system is installed to aid in determining and controlling the radiological hazards associated with the gaseous wastes.

E. LABORATORY WASTES

The Analytical Laboratory is located on the service side of the building adjacent to E and F Cells. Wastes produced in this section include room ventilation and hood air, radioactive liquid wastes, low-activity liquid wastes, chemical-sewer liquid wastes, and sanitary-sewer liquid wastes. The disposal systems for these various wastes are described below.

1. Ventilation Air

The special hazards involved in handling radioactive material in open hoods, and the desirability of continuous laboratory operations through periods of shutdown in the Processing Building (202-A) require that operation of the laboratory ventilation system be independent of other 202-A Building systems. The system provided is a self-contained unit using critical static-pressure differential to maintain the flow of air from "cold" to "hot" zones with positive prevention of flow reversals. Gases exhausted from the system are filtered through Fiberglas filters and discharged to a roof stack at 31,000 cu.ft./min. Additional information on this installation is given in Chapter XI.

2. Radioactive Wastes

The composition and quantity of these wastes are not known with certainty. Redox experience indicates that the volume should approximate a few hundred gallons per day. Provisions are made to discharge this material to the Acid Accumulator, where it is blended with the process aqueous wastes for concentration and storage. The addition of corrosive chemicals via this route is prevented solely by operational controls established by the laboratory supervision.

3. Low-Activity Wastes

The composition and quantity of these wastes are unknown. They are collected in the Laboratory Crib Waste Receivers A and B (TK-U3 and TK-U4) located in the Acid Storage Vault. After suitable analysis, they may be discharged to the 216-A4 Cavern or to the Coating Waste Tank, TK-D2. An estimated maximum of 14,000 gallons per day is handled through this facility.

4. Chemical Sewer Wastes

These materials are discharged to the Purex swamp.

5. Organic Wastes

Organic wastes from the laboratory are discharged to the 216-A2 Cavern. Those containing excessive quantities of radioisotopes, uranium, or plutonium are stripped with an aqueous solution in a batch unit within the laboratory before disposal.

F. DRY WASTES

Dry wastes containing relatively little contamination, such as absorbent tissues, wood, metal parts, etc., are placed in quart cardboard containers which are in turn placed in larger cardboard cartons. When the radioactivity level of the contents of a carton creates a radiation hazard, the carton is sealed and removed to the 200-E Area burial ground.

G. PROCEDURES

1. Normal Procedure--Acid Recovery

1.1 General

The acid recovery section of the Purex process is utilized to receive, concentrate, and dispose of salt-waste streams and to recover up to ninety per cent of the nitric acid for reuse in the process. The basic flowsheet, described here and on Figures X-1, X-2, and X-3, concentrates (with distillation of nitric acid) the HAW stream containing virtually all of the fission

products entering the Plant, and neutralizes and stores the concentrate. The other acid wastes are combined with the acid distillate from the above-mentioned concentration and are concentrated to about one thirtieth of their original volumes with most of the acid present being distilled. The concentrate, containing any uranium and plutonium lost from the solvent-extraction operations together with about 0.1% of the fission products charged to the process, is routed back to the feed preparation unit for reuse. The nitric acid is absorbed from the vapor effluent from the concentrator and the dilute acid solution so produced is concentrated in a vacuum fractionator for reuse in the solvent-extraction operations. Water condensates from these operations are neutralized and sent to caverns for percolation into the soil.

While the "normal"-procedure discussion which follows is based on the general processing scheme outlined above, the equipment provided permits several deviations from the basic flowsheet with minor changes of piping. For example, should the reuse of the concentrate from the second acid concentrator be inadvisable, this concentrate may be combined with the HAW for concentration, neutralization, and storage. This routing in shown on Figures X-1, X-2, and X-3 as the "Alternate Flowsheet". A second alternate flowsheet combines the functions of the absorber, T-F5, and the fractionator, T-U6, into the operation of one equipment piece, T-F5, wherein acid is absorbed from the vapors from the second acid concentrator and recovered as 55 to 60% HNO_3 solution by fractionation at atmospheric pressure. While this operation causes a high rate of corrosion and consequent short equipment life for the reboiler of this unit, this method will be employed during initial Plant operation, until the vacuum fractionator becomes available.

1.2 No. 1 Acid Concentrator

The HAW stream is continuously charged to the No. 1 Acid Concentrator, E-F11-1, directly from the HA Column at a rate of about 8 gallons per minute. The dilute feed enters the base (reboiler) of the concentrator and mixes with the solution recycling in the concentrator. The solution then passes up the inside of the tubes of each of the two parallel sets of tube bundles. Heat is absorbed and the solution is partially vaporized as it rises and finally jets up from the open tube ends. The vapor-liquid mixture strikes the impingement baffles, which aid in separating the phases. The vapors expand in an enlarged section and are then directed into the surmounted de-entrainment tower. Liquid separated from the vapor returns to the base of the reboiler through the central downcomer.

The concentrated product (about 1 gal./min.) continuously overflows by gravity from a settling chamber on the side of the reboiler. The flow rate is metered and the measurement automatically regulates the control point on the reboiler-steam flow controller to maintain the product removal rate at a constant value; i.e., low product rates would decrease the steam flow rate, while high product rates would increase the steam flow rate.

The overhead vapors from the reboiler pass through a de-entrainment tower before condensation. Any liquid present in the overhead vapor from the concentrator is de-entrained by a series of five mechanisms, viz.:

(a) The vapor-liquid mixture produced in the reboiler tubes strikes impingement baffles after leaving the tubes. These aid in separating the phases.

(b) Next, the vapors expand into an enlarged section of the reboiler. Large liquid drops fall out in this zone.

(c) The vapors then pass through chevron baffles for removal of gross particles of liquid.

(d) Additional de-entrainment is secured by passage of the vapor through seven bubble-cap trays in the de-entrainment tower. These trays are operated dry; i.e., the vapor passing upward does not pass through liquid on the trays.

(e) The final stage of de-entrainment is accomplished by three feet of one-inch Raschig-ring packing at the top of the tower.

It is expected that de-entrainment factors in excess of 10^5 will be secured by this combination of de-entrainment devices.

Under normal operating conditions the concentrator reduces the volume of the feed by a factor of about 10; i.e., 10% of the feed is removed as a concentrated product and 90% of the feed is evaporated to produce the overhead stream.

Instrumentation is provided on each concentrator to preclude undesirable organic-nitric acid reactions. These instruments are designed to maintain the liquid level and temperature in the concentrator within safe limits. Control is maintained by shutting off the steam to the reboiler if the established limits are exceeded. Three controls are provided as noted below:

(a) Reboiler temperatures are automatically recorded. Temperatures above 129°C. activate an alarm light. Temperatures above 138°C. activate another alarm light and also shut off the steam to the reboiler.

(b) The pressure of the steam to the reboiler is automatically recorded. Pressures above 39 pounds per square inch gauge activate an alarm light and shut off the steam flow.

(c) The three dip tubes comprising the specific-gravity and weight-factor-measuring system in the reboiler are also coupled to the safety system. Weight-factor indications of about or below 175 and 155 inches of water trip the high and low-level alarm lights, respectively. In addition, a liquid-level indication of less than 67 inches of water between the top two dip tubes will light an alarm signal and shut off the steam to the reboiler.

The total nitrate concentration in the concentrated product should be maintained at less than 8 molar (about 4.2 lbs./gal. of HNO_3) in order to avoid excessive ruthenium volatilization (see B2.3, above). Demineralized water may be added to the concentrator feed for this purpose. This water is evaporated during concentration, carrying nitric acid with it. In this manner, the bottoms acidity may be controlled, subject to the heat-duty capacity limitations of the reboiler and condenser.

1.3 No. 2 Acid Concentrator

The normal operating conditions and procedures for the No. 2 Acid Concentrator are identical with those for the No. 1 Acid Concentrator except for the differences in stream compositions and flow rates.

The condensate from the No. 1 Acid Concentrator plus IAW, 2DW, 2AW, PSD, vacuum-jet condensate, condensate from heating steam from plutonium concentrators, vent-condenser condensate, and a demineralized-water butt are continuously collected in the Acid Accumulator, TK-F10 (the No. 2 Acid Concentrator feed tank) and are fed to the No. 2 Acid Concentrator at about 35 gal./min. The Acid Accumulator has a capacity of 5000 gallons or a holdup of about 2 hr. at the nominal design operating rate. The concentrated product from the No. 2 Acid Concentrator is returned to the Acid Recycle Tank. The overhead vapors are fed continuously to the Acid Absorber.

The automatic controls on the No. 1 and No. 2 Acid Concentrators are identical except for the control-point values on the liquid-level alarm and steam shut-off instruments. The high and low-level alarms are actuated at 177 and 157 inches of water, respectively, as measured on the weight-factor dip tubes. Automatic steam shutoff occurs when a differential pressure between the top specific-gravity and top weight-factor dip tubes is less than 68 inches of water.

1.4 Acid Absorber

Approximately 5500 cu. ft./min. of a water-nitric acid vapor mixture containing about 10 per cent nitric acid, by weight, are fed from the No. 2 Acid Concentrator to the Acid Absorber. As described in B3.2, above, the vapors are charged on the eighth plate from the bottom of the Acid Absorber. The vapors are depleted in nitric acid as they rise through the bubble-cap trays, and the reflux liquid is enriched as it overflows from plate to plate. Water vapor, practically free of acid, issues from the top of the tower at 5500 cu. ft./min. Condensation occurs as the vapors pass through the HNO_3 Condenser, E-F5. Weirs installed in the condenser split the condensate, returning 25% to the Acid Absorber, and discharging (through a flowmeter) the remaining 75% into the process condensate header.

The original design scope for this vessel included both the functions of rectification and stripping, and seven bubble-cap trays and a

reboiler are installed below the feed tray. The addition of a vacuum fractionator to the acid recovery system will make operation of the lower section unnecessary. With the Vacuum Fractionator in operation, the 30 per cent nitric acid liquid produced in the top of the Absorber tower cascades down through the unused lower section and is discharged, by gravity, into the HNO_3 Receiver, TK-F4. This tank has a capacity of 5000 gallons or a holdup of about 17 hours. The 30 per cent nitric acid is jetted from the HNO_3 Receiver to the HNO_3 Sampler for sampling and radiation monitoring, prior to being pumped to the contact-maintenance zone containing the Vacuum Fractionator and auxiliaries.

Current (March, 1955) scheduling indicates that the Vacuum Fractionator installation may not be complete at the time of the Purex Plant start-up. As a temporary measure, the lower section of the Acid Absorber will have to be operated in order to produce a nominal 60 per cent nitric acid product. With this mode of operation, the 30 per cent acid produced in the top of the tower cascades down through the lower section countercurrent to the ascending vapors produced by the reboiler. The desired acid concentration (nominally 60%) in the "bottoms" is maintained by a specific-gravity recorder controller which resets the set point of the flow controller admitting steam to the reboiler. This controls the rate of boiling in the reboiler to produce the desired concentration of acid in the fractionator product.

The 60 per cent nitric acid product overflows, by gravity, from the reboiler into the HNO_3 Receiver (TK-F4) and is then jetted to the HNO_3 Sampler (TK-F3). After sampling and analysis, it is pumped (or jetted) to the 60% HNO_3 Storage Tanks, TK-U1 or TK-U2, for reuse in the process.

1.5 Vacuum Fractionator

The 30 per cent nitric acid stream is received in the 30% Storage and Feed Tank, TK-U5. It is pumped from this vessel through a flow controller into the fifth plate (from bottom) of the Vacuum Fractionator, T-U6. Alternate addition points are available on the sixth and seventh trays.

On entering the tower, the liquid feed is joined by the liquid effluent from the upper section, this flow resulting from the addition of demineralized water at the top of the tower. The composite stream overflows down through the lower section, increasing in nitric acid content as it falls from plate to plate. In the reboiler sufficient heat is supplied to vaporize a portion of the descending liquid, producing 60% HNO_3 which is pumped through a jack-leg to the HNO_3 Storage Tanks, TK-U1 and TK-U2. The vapors from the reboiler rise through the tower, becoming depleted in nitric acid as they pass from tray to tray, and then pass from the top of the tower to the condenser.

The vapors issuing from the top of the tower are condensed in the Barometric Condenser, E-U6-1. The vapors enter the condenser and contact a stream of cold, raw water. Condensation occurs and the combined condensate and raw water leave the condenser through a barometric hot-leg. The effluent is collected in the Tail-Water Tank, TK-U8, and then discharged to the 216-A9 Cavern. Non-condensables which reach the Barometric Condenser are removed by

a two-stage jet assembly which produces a vacuum in the unit. A constant pressure of 100 mm. Hg is maintained at the top of the tower by a controlled air bleed. Pressures below normal increase the amount of air bled into the system and pressures above normal decrease the air bleed rate.

Chloride purge lines are provided on Trays 6, 7, 8, and 9. The material removed during the purge operations is collected in the Purge Tank, TK-U7, then routed via the Laboratory Crib Waste Receiver Tanks, TK-U3 and TK-U4, to a cavern.

As shown in Figure X-2 and described in Chapter XVII, the automatic controls on the Vacuum Fractionator are as follows:

(a) Flow controller on the fractionator feed stream.

(b) Flow controller on the demineralized-water reflux stream.

(c) Flow controller on the steam to the reboiler with its control point regulated by a specific-gravity recorder-controller which senses the reboiler contents.

(d) Column pressure control by air bleed as described above.

1.6 Acid recycle

Recycle of the No. 2 Acid Concentrator concentrate (2WW) is routinely accomplished by use of the Waste Rework Tank, TK-F8. The first step in the procedure involves jetting the 2WW from the Acid Recycle Tank, TK-F7, to the Waste Rework Tank, TK-F8. Here, hydrolysis of any organic material is accomplished by boiling the solution for a period of 10 to 15 hr. under total reflux conditions and with an acidity of about 8 M in the liquid phase. Reflux is provided by the Reflux Condenser, E-F9.

After hydrolysis, the solution may be jetted to any of the Dissolvers (TK-A3, TK-B3, or TK-C3) or to the Centrifuge Feed Tank (TK-E3) for subsequent blending with the metal solution from the Dissolvers and ultimate processing through the solvent-extraction facilities.

2. Detection and Remedy of Off-Standard Conditions--Acid Recovery

2.1 Acid Concentrators

2.11 Fouling of reboiler tubes

The high concentration of acid in the reboiler provides continuous removal of scale formed on the tubes. Therefore, scaling of the reboiler tubes is not expected in normal operation.

2.12 Failure of feed supply to concentrators

This condition is evidenced by a gradual decrease in the concentrated-

product removal rate as the liquid level in the reboiler drops. A decrease in the product removal rate automatically decreases the steam flow to the reboiler. Continued decreases in either the product removal rate or reboiler liquid level automatically shuts off the steam completely.

2.13 Overconcentration

If the feed rate to a concentrator is reduced considerably from normal flow without a compensating reduction of steam flow rate to the chest (which should be accomplished by automatic control), overconcentration will occur. Overconcentration is detected by an increase in the boiling point of the solution in the reboiler and an increase in the specific gravity of this solution. Normal conditions may be re-established by establishing the correct ratio between the rates of concentrator feed and concentrate removal.

2.14 Excessive entrainment

As discussed earlier, de-entrainment factors of about 10^5 must be secured during each concentration step in order to produce recovered acid sufficiently free of radioactivity to permit easy handling. Excessive entrainment during concentration will probably occur only if excessively high boil-up rates, producing a vapor velocity of about 6 ft./sec. or higher in the de-entrainment tower, are employed. Such a condition will be indicated by excessively high readings on the differential-pressure indicators. An immediate decrease of the boil-up rate in the concentrator should remedy this situation.

2.15 Excessive ruthenium volatilization

Excessive ruthenium volatilization is detected by an abnormally high radioactivity, identified by the laboratory as ruthenium, in the recovered nitric acid.

As previously discussed in B2.4, the available data concerning ruthenium volatilization are contradictory in nature, some data implying that ruthenium cannot be volatilized in the acid recovery system, while other data predict that the threshold of ruthenium volatility is fairly close to HW #3 Flowsheet conditions. Factors other than high nitrate concentration which may contribute to ruthenium volatility include the drying of salt on heat-exchange surfaces with subsequent thermal decomposition of ruthenium salts; a catalytic oxidation of ruthenium by ferrous, sulfate, or sulfamate ions; and excessive residence time in the boiling system.

The first corrective procedures to be tried to decrease ruthenium volatilization should probably involve decreasing the nitric acid concentration in the reboilers. This may be accomplished by adding demineralized water to the feed (within the heat-duty limitation of the reboiler and condenser). Increased concentration of nitrite ion was under study at the time of writing as another possible procedure for preventing ruthenium volatilization.

2.16 Excessive corrosion

Allowance was made for prolonged corrosive action by fabricating the

lower section of the concentrator from 1/2-inch stainless-steel plate and the upper section from 3/8-inch plate. Two remotely replaceable heat-exchanger tube bundles are provided on an installed-spare philosophy in order to insure a maximum continuity of operation.

2.17 Too high differential pressure across tower

This condition is detected by differential-pressure instrumentation across the tower. The phenomenon is usually indicative of too high a vapor velocity in the tower and is most likely to occur when starting up. This off-standard condition is remedied, at least temporarily, by reducing the rate of steam flow to the fractionator reboiler in order to reduce the vapor velocity.

2.18 Excessive organic in feed

The accumulation of entrained organic material from the Purex pulse columns in the concentrator feed tanks is expected, and is prevented from entering the concentrators by baffles provided for this purpose in the feed tanks. Detection of this material is provided by specific-gravity dip tubes installed just below the normal liquid working level in the Acid Recycle and Acid Accumulator Tanks. Jets are installed for discharging the organic into the Utility Tank, TK-F13.

2.2 Acid Absorber

2.21 Excessive acid in condensate

This occurrence is detected by routine analysis of the condensate leaving the HNO_3 Condenser, E-F5. Increasing the addition rate of demineralized water added to the Absorber as reflux should remedy the off-standard conditions, although this method of correction also reduces the concentration of nitric acid in the Absorber product. Any acid present in the condensate represents a loss to the system; such acid is removed by the carbonate neutralization in 216-A-TK1 prior to disposal of the stream to the 216-A5 Cavern.

2.22 Excessive differential pressure across Absorber

This condition is detected by differential-pressure instrumentation across the Absorber or, to some degree, by the pressure indicator on the Absorber reboiler. The phenomenon is usually indicative of too high a vapor velocity in the Absorber and is most likely to occur when starting up. This off-standard condition may be remedied, at least temporarily, by reducing the flow of feed to the Absorber (by reducing steam flow to the No. 2 Acid Concentrator) in order to reduce the vapor velocity.

2.23 Low acid concentration in product

A low acid concentration in the "bottoms" product from the Absorber may be caused by (a) a sub-standard acid feed rate to the Absorber, (b) excessive reflux to the Absorber, (c) excessive acid losses in distillate

from the Absorber, or (d) low steam flow to the reboiler when this unit is in operation. Items (a), (b), and (d) may be detected by flowmeter readings and/or material balances, and suitable corrections made. Item (c) has been discussed under 2.21, above.

2.24 Excessive radioactivity in product

The majority of the radioiosotopes which are present in the Absorber feedstock will accumulate in the "bottoms" product. Remedial action for excessive radioactivity in the absorber product will have to be concerned with the No. 2 Acid Concentrator performance, i.e., decreasing radioactivity carryover from this vessel. See G2.14 and 2.15 for further discussion.

2.25 Chloride accumulation

As discussed in B3.2, above, there is a possibility of an accumulation of corrosive chloride ion on one or more of the bubble-cap trays. This condition, should it occur, is detected by routine analysis of the contents of the plates just above the vapor feed point. If chloride accumulation is detected, the contents of the plate or plates are purged (either completely and periodically or by a small continuous withdrawal of liquid) from the system through the purge line to the HNO_3 Sampler (TK-F3). The required frequency and extent of such purging is dependent on the rate at which chlorides enter the process as impurities in the reagents used, and, hence, must be determined on the basis of operating experience.

2.3 Vacuum Fractionator

2.31 Excessive differential pressure

This condition may be detected by differential-pressure instrumentation across the fractionator. The phenomenon is usually indicative of too high a vapor velocity in the fractionator and is most likely to occur when starting up. This off-standard condition may be remedied, at least temporarily, by reducing the rate of feed addition to the tower or the steam flow to the reboiler in order to reduce the vapor velocity.

2.32 Excessive pressure in tower

The reduced operating pressure (100 mm. of Hg at top) in the fractionator is established by a barometric condenser and a two-stage jet for the removal of non-condensable vapors and is recorded by a pressure recorder. Air is bled to the system, under flow control, to maintain the exact pressure desired. Excessive pressure would be developed in the tower if (a) the flow of water to the barometric condenser ceased, (b) either jet stage or the interstage jet condenser failed, or (c) the air bleed rate was above normal. Suitable instrumentation is available (as discussed in Chapter XVII) to detect any of these failures and permit corrective steps to be taken. Air may also leak into the unit through improper flange connections and cause the subject condition. In this case, the leaks must be found and corrected.

2.33 Excessive acid in distillate

The distillate (overhead) from the fractionator normally passes through the barometric condenser to a Tail Water Tank (TK-U8) and then to a cavern. The pH of the Tail Water Tank effluent is continuously measured and used to control the addition rate of a sodium carbonate stream to the tank. Excessive acidity in the distillate is indicated by an above-normal flow of the sodium carbonate stream. An increase in the flow of reflux to the fractionator may remedy the off-standard condition. The degree of correction attainable is limited by the reboiler capacity and differential pressure across the column.

2.34 Low acid concentration in product

The acid concentration in the "bottoms" product from the fractionator is normally maintained by a specific-gravity recorder-controller which resets the set point of the flow controller admitting steam to the reboiler. This controls the rate of boiling in the reboiler and produces the desired concentration of acid in the fractionator product. With this method of control, only failure of the control system will result in a low concentration of acid in the product. Remedial action will be concerned with correction of the control system.

2.35 Chloride accumulation

Accumulation of chloride ion on one or more of the bubble-cap trays may be corrected by purging (either completely and periodically, or by small continuous withdrawal of liquid) from the system through the purge lines to the Purge Tank (TK-U7). The frequency and extent of such purging is determined on the basis of experience.

2.36 Excessive corrosion

Corrosion rates in the fractionator are normally low because of the low boiling point of 60 per cent nitric acid under reduced pressure. If operated at a higher pressure than normal, however, corrosion rates would increase with increasing pressure, and hence, boiling temperatures. The fractionator reboiler is external to the column proper, permitting replacement whenever necessary.

3. Normal Procedure--Waste Disposal

3.1 Neutralization of high-activity wastes

Waste neutralization is a batch operation. After the concentrated acid waste stream is received and sampled, a 1250-gallon batch (equivalent to about 11 tons of uranium processed) is jetted from the Concentrate Sample Tank, TK-F15, to the Neutralizer, TK-F16. After the agitator and cooling coils in the Neutralizer are operating, 470 gallons of 50% caustic is added in increments that do not produce an excessive

temperature rise in the tank. Next, 3300 gallons of IOW (1.8% Na_2CO_3) from the ITO Wash Collection Tank, TK-G8, is added to complete the neutralization. This stream is added at a rate low enough to avoid an excessive rate of carbon dioxide evolution.

The adequacy of the caustic and carbonate additions in providing the desired pH (about 8 to 9) may be checked by a sample and/or a pH determination on the tank contents.

3.2 Storage of high-activity wastes

After neutralization, the high-activity wastes are jetted to a particular tank in the 241-A Tank Farm via the 216-A-151 and 216-A-152 Diversion Boxes.

As described in C2.32, above, the heat generated by decay of the radioisotopes present in the waste causes the stored wastes to boil. The vapors, so produced, pass through a 20-inch vent line to a 24-inch vapor collection header. They then pass to a buried de-entrainment vessel and to the contact condensers which provide direct contact between the cooling water and vapors. The combined cooling water and condensate are discharged to the 216-A8 Cavern. Water is added to the storage tank to limit the degree of self-concentration of the stored wastes, controlling the temperature of the tank contents to the range of 250° to 300°F.

3.3 Routing of low-activity wastes

Approximately 1,500,000 gallons of liquid wastes containing only trace quantities of radiomaterials, primarily process and steam condensates, are discharged from the Purex Plant daily. Process condensates from the Canyon concentrator units are collected in a six-inch condensate header located in the Hot Pipe Trench and are routed via a calcium carbonate neutralizer and a proportional sampler to the 216-A5 Cavern. Steam condensate from the process vessels discharges through the south wall of the building. With few exceptions the lines pass through one of the five trap pits located outside and adjacent to this wall. When the "gravity" head on the condensate permits, it passes directly through a trap to the 16-inch condensate header. When the head is low, as in the case of condensate discharge from major process concentrators operating under low steam pressure, the condensate discharges to the trap pit and then by gravity to a condensate pump pit. The condensate is then pumped to the 16-inch condensate header and ultimately to the 216-A6 Cavern.

Unusual activity in the condensate may be detected by scintillation probes or sampling. Scintillation-counter probes are located in the header near the east end of the building and also on the discharge line from each individual vessel. The proportional sampler pit is located near the 216-A6 Cavern.

3.4 Routing of negligible-activity wastes

Approximately 5,000,000 gallons of raw water employed in process equipment for cooling and general utility purposes are discharged from the Purex Plant daily. This flow discharges through branch lines which pass through the south wall of the Canyon building and enter a 30-inch buried collection

header running parallel to the building. It then flows past instrument risers containing temperature elements and a scintillation-counter probe before discharge to a pump pit. The pit contains two pumps, each rated at 1200 gallons per minute, which can be operated individually or in parallel. The pumps discharge a portion of the flow to the 201-A water storage tank and the balance of the flow through a 30-inch vitrified clay line to the Purex swamp.

When activity levels determined by the aforementioned scintillation probe exceed a predetermined safe level (probably five times background) an alarm is sounded in the 202-A Central Control Room, and power to the cooling-water pumps is automatically disconnected. The source of high activity may be determined by the use of probe risers located on the discharge line from each individual vessel.

4. Detection and Remedy of Off-Standard Conditions--Waste Disposal

4.1 Excessive uranium and/or plutonium in waste

Rework of the acid waste stream, IWW, is necessary whenever the stream contains excessive amounts of uranium and/or plutonium. Off-standard conditions are detected during routine sampling of the IWW (1250-gallon batch) in the Concentrate Sampler Tank, TK-F15. The composition of the off-standard batch, exclusive of uranium and plutonium, will approximate that of the IWW shown in Figure X-1, i.e., about 8 M nitric acid with traces of salts and organic materials. The rework procedure is identical with that described above (under G1.6) for 2WW Acid recycle.

4.2 Excessive temperatures in the underground storage tanks

Temperatures of 600 to 650°F. in the bottom of the tank may be permitted without fear of weakening the tank structure. Even temperatures of 900°F. may be allowed with only a small loss in the stress strength of the tank. If the temperature in the tank exceeds normal limits, dilution water may be added to reduce the concentrations of solids and so reduce the temperatures. Alternately, a pump may be installed on the tank and the contents either circulated or pumped to another tank in order to homogenize the contents.

4.3 Excessive radioactivity in wastes normally sent to swamp

This condition is detected by either a scintillation-counter probe located a short distance upstream from the pump pit (see C3) or by analysis of samples from the continuous proportional-sample unit in the pit.

When activity levels determined by the probe exceed a predetermined safe level (about five times background), an alarm is sounded in the 202-A Central Control Room and power to the cooling-water pumps is automatically disconnected. The source of high activity can be isolated by use of the probes in risers located on each vessel discharge line prior to entry into the header.

REFERENCES

(1) J. H. Perry, Chemical Engineers' Handbook, 3rd. Edition, McGraw-Hill Book Company, Inc., New York (1950).

(2) C. S. Robinson, and E. R. Gilliland, Elements of Fractional Distillation, 4th Edition, McGraw-Hill Book Company, Inc., New York (1950).

(3) ANL-4755 Neutron Producer (CP-6) Reactor Program Quarterly Report, October 1951 through December 1951. Author not stated. 1-30-52.

(4) CF-52-2-46 Acid Recovery Feasibility Test on Full-Scale Savannah River Type Evaporator. W. B. Watkins. 2-7-52.

(5) CF-53-7-130 Ruthenium Distillation in Purex Acid Waste Evaporation. J. R. Flanary and V. J. Reilly. 7-20-53.

(6) DP-25 Interim Technical Report, TNX Evaporator Incident, January 12, 1953. T. J. Colven, Jr., G. M. Nichols, and T. H. Siddall. 5-15-53.

(7) HW-20847 Filtration of Radioactive Aerosols by Glass Fibers. A. G. Blasewitz et al. 4-16-51.

(8) HW-21826 Variations in Silver Reactor Performance. A. G. Blasewitz and B. F. Judson. 8-3-51.

(9) HW-24763 Purex Chemical Flowsheet HW No. 1. R. E. Tomlinson and F. W. Woodfield. 6-30-52.

(10) HW-25496 Specification Letter for Purex Laboratory. P. B. Fisk. 9-2-52.

(11) HW-25635 Progress Report, Chemical Development, August 1952, F. W. Woodfield. 8-31-52.

(12) HW-26104 Quarterly Progress Report, Chemical Research, July through September 1952. O. F. Hill. 11-3-52.

(13) HW-26892 Progress Report, Chemical Development, January 1953. F. W. Woodfield. 1-31-53.

(14) HW-27411 Progress Summary of EB-1 and ED-1 Evaporator Corrosion Studies. J. G. Bradley. 3-16-53.

(15) HW-28217 Heat Generations in Radioactive Wastes. A. M. Platt. 7-28-53.

(16) HW-28320 Purex Facility--Waste Disposal Design Criteria. L. B. Brinkman. 6-12-53.

(17) HW-29534 Progress Report, Chemical Development, September 1953. F. W. Woodfield. 9-30-53.

(18) HW-30041 Corrosion Effects of Lowering the pH in TBP Waste Storage Tanks. N. D. Groves. 4-6-54.

(19) HW-30142 Comparative Study of Alternate Fibrous Glass and Sand Ventilation Air Filter Installations for Purex. L. L. Zahn. 12-14-53.

(20) HW-30246 Recovered Acid Use in Redox and Purex. R. J. Sloat. 12-14-53.

(21) HW-30600 Vacuum Nitric Acid Fractionation in the Purex Plant. R. J. Sloat and R. E. Smith. 1-26-54.

(22) HW-31300 The Volatilization of Ruthenium in Nitric Acid Recovery. A. S. Wilson. 9-3-54.

(23) HW-31757 Progress Report, Chemical Development, April 1954. F. W. Woodfield. 4-30-54.

(24) HW-32041 Ground Disposal of Radioactive Wastes at the Hanford Site. H. M. Parker. 6-4-54.

(25) HW-32223 Project Proposal--Purex Acid Fractionator (Project CG-598). D. R. Gustavson. 7-1-54.

(26) HW-32878 The Corrosion of Austentic Stainless Steel in Chloride-Bearing Purex Process Streams. K. L. Sanborn. 8-31-54.

(27) HW-32964 Progress Report, Chemical Development, August 1954. F. W. Woodfield. 8-31-54.

(28) HW-33479 Ruthenium in the Purex Process. R. E. Tomlinson and F. J. Leitz. 10-14-54.

(29) NYO-1182 Progress Engineering Report on the Effect of Chloride on the Design and Operation of Nitric Acid Recovery Facilities. F. G. Walters, F. W. Winn, and H. H. Bulkowski. 10-15-53.

(30) ORNL-1138 The Hydrolysis of TBP and Its Effect on the Purex Process. V. J. Reilly. 12-13-51.

(31) ORNL-1210 Corrosion Data from the ORNL Purex Pilot Plant Acid Recivery Equipment. J. W. Landry and J. W. Ullmann. 3-25-52.

(32) TID-5146 Report on Vapor-Liquid Equilibria of Nitric Acid Solutions Containing Chloride Solutions. D. F. Hagerty and A. N. Hixson. Undated.

LIST OF TABLES AND FIGURES

TABLE X-1 LIQUID WASTES--Plant Effluent

TABLE X-2 HIGH-ACTIVITY WASTES--Chemical Flowsheet HW #3

FIGURE X-1 PROCESS FLOW DIAGRAM--Acid Concentration System

FIGURE X-2 PROCESS FLOW DIAGRAM--Acid Recovery System

FIGURE X-3 PROCESS FLOW DIAGRAM--Waste Neutralization System

FIGURE X-4 OPERATING DIAGRAM--Acid Absorber

FIGURE X-5 OPERATING DIAGRAM--Vacuum Fractionator

FIGURE X-6 HEAT GENERATION IN PUREX WASTE STORAGE TANKS FOR URANIUM IRRADIATED 50 DAYS

FIGURE X-7 HEAT GENERATION IN PUREX WASTE STORAGE TANKS FOR URANIUM IRRADIATED 100 DAYS

FIGURE X-8 HEAT GENERATION IN PUREX WASTE STORAGE TANKS FOR URANIUM IRRADIATED 200 DAYS

FIGURE X-9 TK-101 THERMOCOUPLE INSTALLATION

TABLE X-1

LIQUID WASTES - PLANT EFFLUENT

Basis: 10 short tons/day of uranium irradiated to an integrated exposure level of 600 MWD/T (514 g. Pu/ton U) at 5.0 MW/T and aged 90 days after irradiation.

Waste Stream	Volume, Gal./Day	Curies/Gal.[b]	Approx. Pu Conc., G./Ml.	Disposal Method
High-Activity Wastes:				
Main process[a]	4,480	560 (γ) 1,300 (β)	1.9	241-A Tank Farm
Coating waste	2,400	0.20	0.2	241-A Tank Farm
Low-Activity Wastes:				
Organic waste	Intermittent	--	--	216-A2 Cavern
Laboratory waste and cell drain	14,000	--	--	216-A4 Cavern
291-A Stack drain	Intermittent	--	--	216-A4 Cavern
Fan bearings, turbine condensate, Control House floor drain	72,000	0	0	216-A4 Cavern
241-A-151 Diversion Box drain	Intermittent	--	--	216-A4 Cavern
291-A Stack liner drain	--	--	--	Carbonate Neutralization Tank 216A-TK1 to 216-A4 Cavern
Sampler House sink and floor drain	--	--	--	216-A4 Cavern
291-A Stack-Gas Filter drain	--	--	--	216-A4 Cavern
291-A Stack gutter drains	--	--	--	216-A4 Cavern
291-A Stack pit plenum	--	--	--	216-A4 Cavern
Process condensate	190,000	10^{-6}	0.02	216-A5 Cavern
Steam condensate	220,000	--	--	216-A6 Cavern
241-A-152 Diversion Box drain	Intermittent	--	--	216-A7 Cavern
Waste Tank Farm condenser disposal	576,000	10^{-3} to 10^{-2}	--	216-A8 Cavern
203-A (UNH Storage) sump	Intermittent	--	--	216-A9 Cavern
Vacuum Fractionator Barometric Condenser tail water	320,000	0 to 10^{-7}	--	216-A9 Cavern
Negligible-Activity Wastes:				
Cooling water	5,000,000	0 to 10^{-7}	0	East Swamp
Sanitary sewer	--	--	--	Tile Field
Chemical sewer	--	--	--	Tile Field

Notes:

(a) Main process waste from the Purex Plant is discharged via the Neutralizer Tank (TK-F16). It is a composite of the following streams after acid recovery, back-cycling, and waste concentration operations.

(1) Centrifuge slurry.
(2) Solvent-extraction-battery wastes.
(3) Plutonium Concentrator condensates.
(4) Vacuum Jet Condenser condensate.
(5) Interface jet-out wastes.
(6) Solvent recovery system wastes.
(7) Vent Condenser condensate.
(8) Utility Tank wastes.
(9) Laboratory radioactive wastes.
(10) Cell Drain Collection Tank waste.

(b) Beta plus gamma, except where otherwise noted.

TABLE X-2

HIGH-ACTIVITY WASTES

Chemical Flowsheet HW #3

Average processing rate of 8 tons/day of 600-MWD/T, 5.0-MW/T, 90-day-"cooled", irradiated uranium.

Stream	Volume, Gallons/Day	Activity, Curies/Day Beta	Gamma	Total	Pu, G./Day	U, Lb./Day	Major Components: $NaNO_3$ Wt.%	Lb./Day	NaOH Wt.%	Lb./Day	$NaAlO_2$ Wt.%	Lb./Day	$NaNO_2$ Wt.%	Lb./Day	HNO_3 Wt.%	Lb./Day	Na_2CO_3 Wt.%	Lb./Day
A. No. 1 Acid Conc. Feed:																		
HAW	9,350	5×10^6	2×10^6	7×10^6	8.2	32									13.0	10,850		
20W (from TK-R8)	Intermittent																	
IOW (from TK-G8)	Intermittent																	
Utility Decanter (TK-F14)	Intermittent																	
HA Column jet-out (T-H2)	Intermittent																	
B. No. 2 Acid Conc. Feed:																		
IAW	9,300	800	800	1600	8.2	32									12.7	10,500		
2DW	9,350	1.5	1.5	3	8.2	32									12.9	10,850		
2AW	3,880	2.5	2.5	5	8.2										29.1	11,000		
IWD	8,500	320	160	480											10.1	7,570		
Vent condensate (E-F1)	4,190																	
Steam condensate (Pu Conc.)	504																	
Process condensate (from E-L8)	215	10^{-5}	10^{-5}	2×10^{-5}	0.4													
Laboratory wastes	500																	
Reflux condensate (E-F9)	Intermittent																	
IA, 2A, 2D Column jet-out	Intermittent																	
Cell Drain Collection (TK-F18)	Intermittent																	
Vacuum jet condensate (TK-F18)	Intermittent																	
C. Neutralizer Feed:																		
IWW	885	5×10^6	2×10^6	7×10^6	8.2	65	3.5	319							36.1	3,270		
IOW	2,330	160	160	320	16.4	96	0.4	95									1.8	350
Caustic	333								50	2110								
Centrifuge slurry	40				0.4	1.6												
D. Underground Stored Wastes:																		
Neutralized waste	3,590	5×10^6	2×10^6	7×10^6	25.0	163	15.2	4950	0.11	36								
Coating waste	1,920			400	1.6	6	7.0	1254	5.1	912	11.8	2112	7.4	1325				

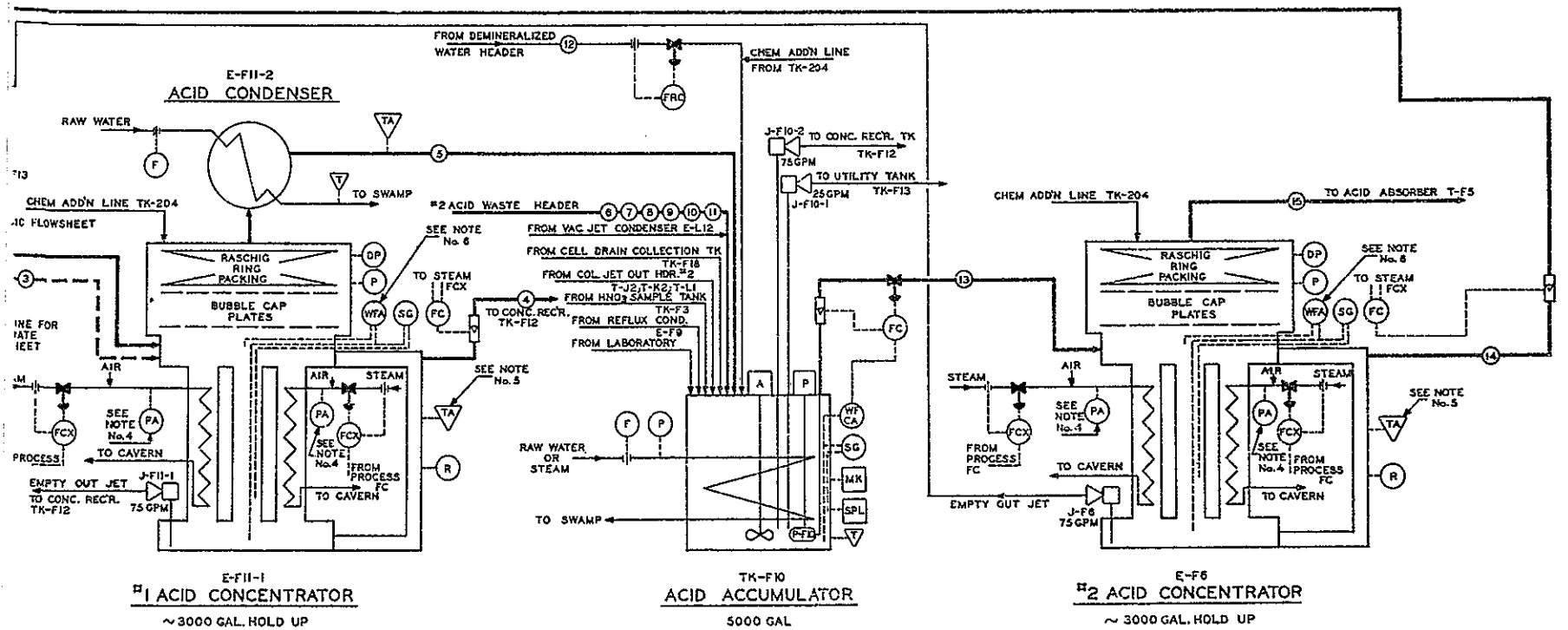

6	7		8		9		10		11		12		13		14		15	
1W 8.07	2W 3.37		2W 8.12		PSD and 2PD 0.36		SC FG (9) 0.55		V.C.C. (8) 3.64		H_2O Batt 3.02		2W 34.52		2W 1.25		2W 5580 SGPM	
	Vt. %		Vt. %		Vt. %		Vt. %		Vt. %		Vt. %		Vt. %		Vt. %		Vt. %	
7.76	87.06	6.82	69.96	7.80	86.70	8.22	98.67	8.33	100	8.33	100	8.33	100	7.80	88.34	5.83	56.31	7.90	89.83
1.13	12.72	2.84	29.13	1.16	12.89	0.11	1.33							1.01	11.44	4.04	39.02	0.89	10.12
0.004	0.04	0.028	0.29											0.004	0.04				
Trace		0.020	0.20	0.0030	0.03									0.003	0.03	0.17	1.64		
				0.012	0.13									0.003	0.03				
		0.023	0.24	0.0036	0.04									0.003	0.03	0.15	1.45		
		0.008	0.08	0.0013	0.01									0.001	0.01	0.052	0.50		
0.007	0.08	0.007	0.07	0.007	0.08									0.0010	0.01			0.0003	0.06
0.003	0.03	0.003	0.03	0.003	0.03									0.0017	0.02				
0.007	<0.08			<0.007	<0.08									<0.003	<0.03	0.017	0.15		
8×10^{-4}		2.1×10^{-3}		8.5×10^{-4}		Trace								6.0×10^{-4}		1.7×10^{-2}	<0.51		
0.036		4.6×10^{-4}		1.8×10^{-4}										0.025		0.694		7×10^{-6}	
1.07	1.17		1.08		1.0		1.0		1.0		1.0		1.06		1.24		115	
25	25		25		82		65		71		25		37		115			
1.0	1.0		1.0		1.0		1.0		1.0		1.0		1.0		1.5			
A	A		A		A		A		A		A		A		A		V	

ALTERNATE FLOWSHEET (10)																													
1		2		3		4		5		6 - 11		12		13		14		15	
1W 8.12		H_2O Batt 2.48		1W 11.64		1W 1.04		1W 10.60		Same as Basic Flowsheet		H_2O Batt 3.75		2W 38.46		2W 1.04		2W 6900 SGPM	
	Vt. %		Vt. %		Vt. %		Vt. %		Vt. %		Vt. %		Vt. %		Vt. %		Vt. %		Vt. %
7.77	95.76	8.33	100	7.76	86.22	5.66	54.57	7.94	89.08			8.33	100	7.86	88.78	5.71	55.25	7.94	89.90
1.16	12.98			1.17	13.00	3.99	38.47	0.89	10.07					0.98	11.04	4.04	39.09	0.89	10.07
0.007	0.08			0.0052	0.06									0.0033	0.04				
Trace				0.019	0.21	0.27	2.60							0.0024	0.03	0.21	2.03		
														0.0024	0.03				
				0.016	0.18	0.18	1.74							0.0028	0.03	0.18	1.74		
				0.005	0.06	0.062	0.60							0.0012	0.01	0.062	0.60		
0.007	0.08			0.005	0.06			0.005	0.06					0.0036				0.0037	0.04
0.003	0.03			0.002	0.02									0.0015					
				0.0018	0.02	0.029	0.28									0.020	0.19		
<0.007	<0.08			<0.015	<0.17	< 0.18	<1.74							<0.003	<0.03	<0.113	<1.09		
8.8×10^{-4}				2.4×10^{-3}		2.7×10^{-2}								5.4×10^{-4}		2.0×10^{-2}			
210				150		1200		0.017						0.023		0.84		8.4×10^{-6}	
1.08		1.0		1.08		1.24		1.06				1.0		1.06		1.24		115	
25		25		33		115		71				25		43		115			
1.0		1.0		1.0		1.5		1.0				1.0		1.0		1.5			
A		A		A		A		A				A		A		A		V	

...ntroller Integrator — A Agitator

...on — FC Flow Controller

...ters

...tere Alarm

2. Drawn and calculated according to a modified Purex HW f3 Flowsheet. see Figure I-4 of this manual.
3. Basis: 10 short tons of uranium per day (instantaneous rate), exposure of 600 MD/T at 5 MW/T, and 90-day slug cooling period.
4. Steam pressure instrument to alarm and shut off steam at 39 lb./sq.in.ga.
5. Solution temperature instrument to alarm at 129°C, and shut off steam at 133°C.
6. Weight factor instrument to alarm at slightly abnormal liquid level and shut off steam at unsafe level.
7. It is assumed the TBP will be reduced to H_3PO_4 and hydrocarbon gases in the concentrators.
8. Vent condenser condensate.
9. Steam condensate from plutonium concentrators.
10. The 2W is routed to the Dissolvers or Centrifuge Feed Tank in the basic flowsheet and is routed to the Acid Recycle Tank in the alternate flowsheet.

FIGURE X-1

PROCESS FLOW DIAGRAM

ACID CONCENTRATION SYSTEM

[redacted]

[redacted]

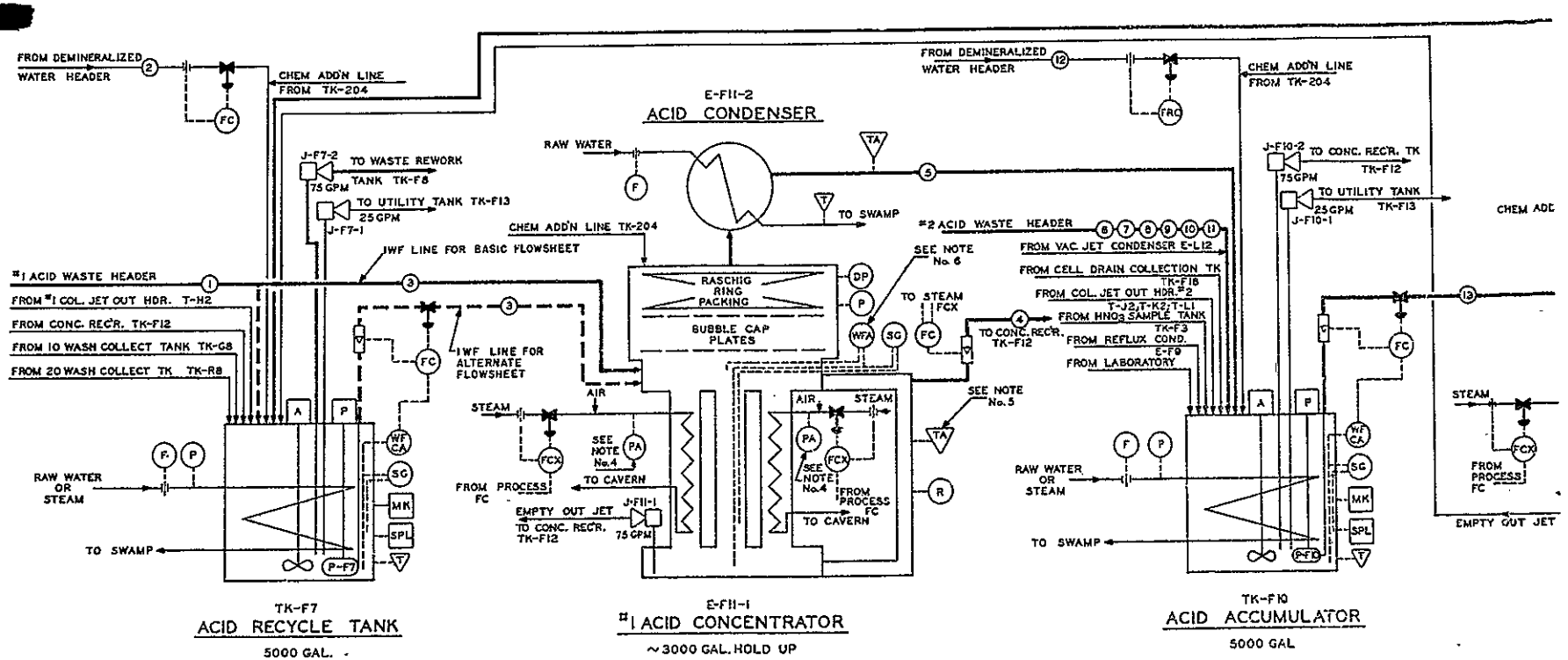

BASIC FLOWSHEET (10)

Code	1		2	3		4		5		6		7		8		9		10		11		12		13		14		15	
Stream	EIW		H_2O Batt	IWF		IWW		IWD		IAW		2IW		2SW		FSD and 2FD		SC FC (9)		V.C.C. (8)		H_2O Batt		2AF		2SW		2WD	
Flow, G.P.M.	8.12		None	8.12		0.73		7.39		8.07		3.37		8.12		0.36		0.55		3.64		3.02		34.52		1.25		5520 SCFM	
Components/Gal.		Wt. %			Wt. %		Wt. %		Wt. %		Wt. %		Wt. %		Wt. %		Wt. %		Wt. %		Wt. %		Wt. %		Wt. %		Wt. %		Wt. %
H_2O, lb.	7.75	86.20		7.75	86.20	5.62	54.36	7.90	89.80	7.76	87.06	6.82	69.96	7.80	86.70	8.22	98.67	8.33	100	8.33	100	8.33	100	7.80	88.34	5.83	56.31	7.90	89.83
HNO_3, lb.	1.16	12.90		1.16	12.90	3.91	37.82	0.89	10.12	1.13	12.72	2.84	29.13	1.16	12.89	0.11	1.33							1.01	11.44	4.04	39.02	0.89	10.12
$NaNO_2$, lb.	0.007	0.08		0.007	0.08					0.004	0.04	0.028	0.29											0.004	0.04				
$NaNO_3$, lb.	0.027	0.30		0.027	0.30	0.38	3.66			Trace		0.020	0.20	0.0030	0.03									0.003	0.03	0.17	1.64		
$Fe(NH_4SO_3)_2$, lb.														0.012	0.13									0.003	0.03				
$Fe_2(SO_4)_3$, lb.	0.022	0.24		0.022	0.24	0.25	2.42					0.023	0.24	0.0036	0.04									0.003	0.03	0.15	2.65		
Na_2SO_4, lb.	0.0079	0.09		0.0079	0.09	0.088	0.85					0.008	0.08	0.0013	0.01									0.001	0.01	0.052	0.50		
NC Diluent, lb.	0.007	0.08		0.007	0.08			0.0077	0.09	0.007	0.08	0.007	0.07	0.007	0.08									0.0020	0.04			0.0041	0.05
TBP, lb.	0.003	0.03		0.003	0.03					0.003	0.03	0.003	0.03	0.003	0.03									0.0017	0.02				
H_3PO_4(7), lb.						0.012	0.12																			0.017	0.16		
HN, lb.	<0.007	<0.08		<0.007	<0.08	<0.078	<0.75			<0.007	<0.08			<0.007	<0.08									<0.003	<0.03	<0.094	<0.91		
Pu, g.	8.8×10^{-4}			8.8×10^{-4}		9.8×10^{-3}				8.8×10^{-4}		2.1×10^{-3}		8.8×10^{-4}		Trace								6.0×10^{-4}		1.7×10^{-2}			
α series	210			210		2400				0.086		4.6×10^{-1}		1.8×10^{-4}										0.025		0.094			7×10^{-6}
Physical Properties																													
Specific Gravity	1.08			1.08		1.24		1.06		1.07		1.17		1.08		1.0		1.0		1.0		1.0		1.06		1.24		114	
Temperature, °C.	25			25		115		72		25		25		25		82		85		72		25		37		115			
Viscosity, cp.[2]	1.0			1.0		1.5		1.0		1.0		1.0		1.0		1.0		1.0		1.0		1.0		1.0		1.5			
Phase	L			L		L		L		L		L		L		L		L		L		L		L		L		V	

Code	1		2		3	
Stream	EIV		H_2O Batt		IWF	
Flow, G.P.M.	8.12		2.48		11.64	
Components/Gal.		Wt. %		Wt. %		Wt. %
H_2O, lb.	7.77	96.76	8.33	100	7.76	86.22
HNO_3, lb.	1.16	12.98			1.17	13.00
$NaNO_2$, lb.	0.007	0.08			0.0052	0.06
$NaNO_3$, lb.	Trace				0.019	0.21
$Fe(NH_4SO_3)_2$, lb.					0.016	0.18
$Fe_2(SO_4)_3$, lb.					0.005	0.06
Na_2SO_4, lb.	0.007	0.08			0.005	0.06
NC Diluent, lb.	0.003	0.03			0.002	0.02
TBP, lb.					0.0018	0.02
H_3PO_4(7), lb.					<0.015	<0.17
HN, lb.	<0.007	<0.08				
Pu, g.	8.8×10^{-4}				2.4×10^{-3}	
α series	210				150	
Physical Properties						
Specific Gravity	1.08		1.0		1.08	
Temperature, °C.	25		25		33	
Viscosity, cp.[2]	1.0		1.0		1.0	
Phase	L		L		L	

NOTE:

1. Symbol Abbreviations

- SPL Sampler
- MK Microphone
- P Pressure
- PA Pressure Alarm
- DP Differential Pressure
- SG Specific Gravity
- WFA Weight Factor Alarm
- WF CA Weight Factor Controller Alarm
- F Flow Recorder
- FCX Flow Controller Integrator
- R Radiation
- T Temperature
- TA Temperature Alarm
- P Pump
- A Agitator
- FC Flow Controller

2. Drawn and calculated according to a modified Purex HW #3 Flowsheet. see Figure I-4 of this manual.
3. Bases: 10 short tons of uranium per day (instantaneous rate), exposure of 600 MWD/T at 5 MW/T, and 90-day slug cooling period.
4. Steam pressure instrument to alarm and shut off steam at 39 lb./sq.in.-ga.
5. Solution temperature instrument to alarm at 139°C. and shut off steam at 138°C.
6. Weight factor instrument to alarm at slightly abnormal liquid level and shut off steam at unsafe level.
7. It is assumed the TBP will be reduced to H_3PO_4 and hydrocarbon gases in the concentrators.
8. Vent condenser condensate.
9. Steam condensate from plutonium concentrators.
10. The 2WD is routed to the Dissolvers or Centrifuge Feed Tank in the basic flowsheet and is routed to the Acid Recycle Tank in the alternate flowsheet.

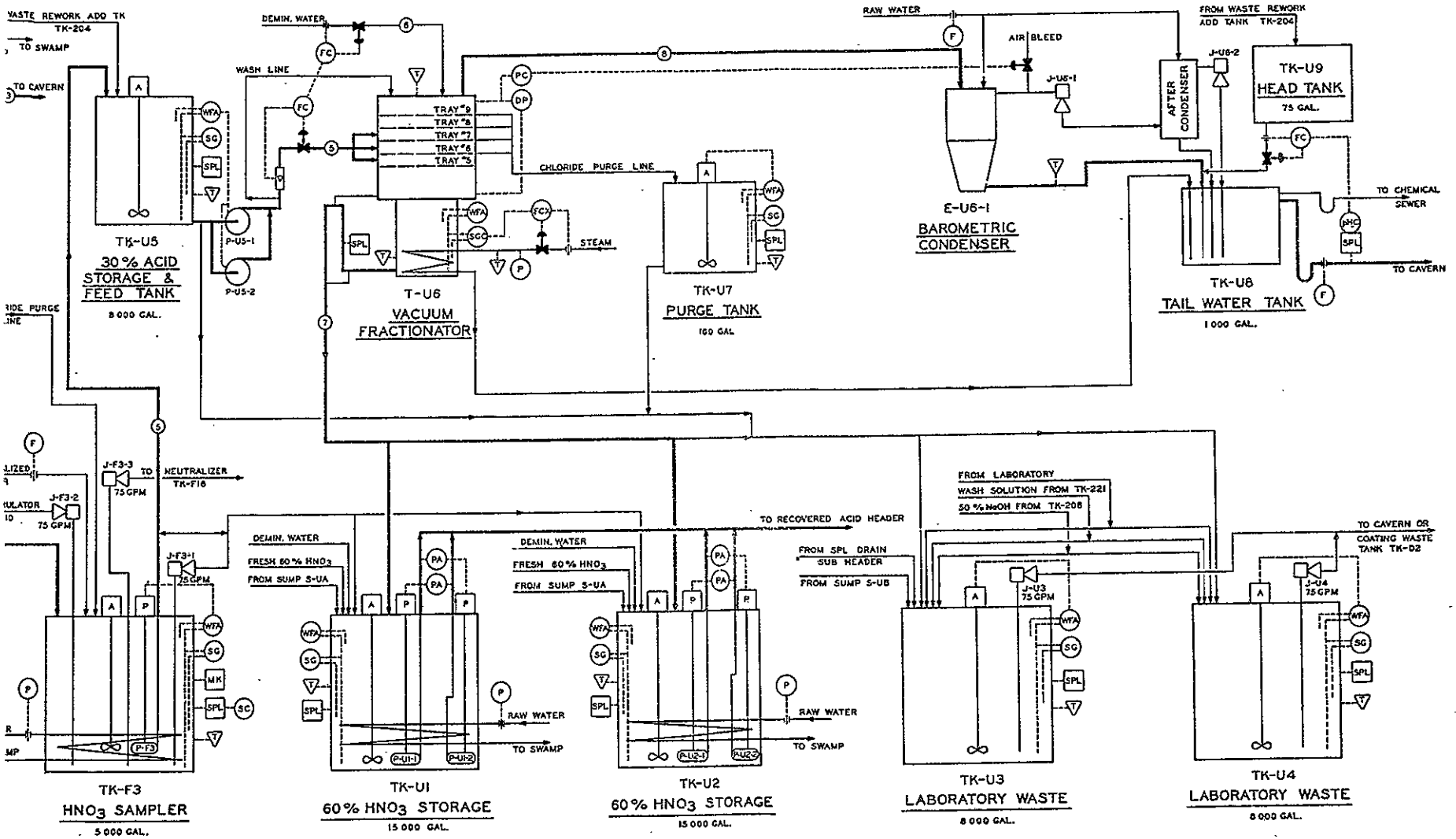

	(5) ATF	(6) REFLUX H_2O	(7) AFA	(8) AFD
	10.24	1.99	4.27	1350 SCFM
	6.92 / 2.86 / 2.3x10⁻⁵ — Wt. % 70.7 / 29.3	8.33 — Wt. % 100	4.55 / 6.84 / 5.5 x 10⁻⁵ — Wt. % 40 / 60	8.32 / 0.01 / 5.5x10⁻⁹ — Wt. % 99.88 / 0.12
	1.18 As Received 1.3 1	2.0 25 1.0 1	1.37 81 1.5 1	52 Vapor

	(1) ZAO-AAF	(2) ZEOTROPIC MIXTURE	(3) AAD	(4) AAA	(5) ATF	(6) REFLUX H_2O	(7) AFA	(8) AFD
	6300 SCFM	1.83	28.26	11.19	11.53	2.23	2.82	1530 SCFM
	7.94 / 0.89 / 0.0037 / 8.4x10⁻⁶ — Wt. % 89.96 / 10.07 / 0.04	8.33 — Wt. % 100	8.32 / 0.0011 / 0.0069 / 2.8x10⁻⁹ — Wt. % 99.02 / 0.02 / 0.05	6.88 / 2.95 / 2.6x10⁻⁵ — Wt. % 70 / 30	5.02 / 2.86 / 2.7x10⁻⁵ — Wt. % 63.7 / 29.3	8.33 — Wt. % 100	4.55 / 6.81 / 6.5 x 10⁻⁵ — Wt. % 40 / 60	8.32 / 0.0011 / 6.5x10⁻⁹ — Wt. % 99.99 / 0.01
	115 Vapor	1.0 25 1.0 1	1.0 79 1.0 1	1.18 307 2.3 1	1.18 As Received 1.3 1	2.0 25 1.0 1	1.37 81 1.5 1	52 Vapor

NOTES:

1. Symbol Abbreviations

SPL	Sampler	SGC	Specific Gravity Controller
SC	Scintillation Counter	WFA	Weight Factor Alarm
pHC	pH Controller	F	Flow Recorder
P	Pressure Recorder	FC	Flow Controller
PA	Pressure Alarm	FCX	Flow Controller Integrator
DP	Differential Pressure	R	Radiation Controller
PC	Pressure Controller	T	Temperature Recorder
SG	Specific Gravity	A	Agitator
		P	Pump

2. Drawn and calculated according to a modified Purex ET/D Flowsheet; see Figure I-4 of this manual.
3. Basis: 10 short tons of uranium per day (instantaneous rate), exposure of 600 MWD/T at 5 MW/T, and 90 day cooling period.
4. All instruments are chart recorded.
5. No built up steam required to T-U5 when used as an absorber.
6. Flow rates for cooling water to the Barometric Condenser and the After Condenser will be specified by the vendor.
7. The ZAO is routed to the Dissolvers or Centrifuge Feed Tank in the basic flowsheet and is routed to the Acid Recycle Tank in the alternate flowsheet.

FIGURE X-2

PROCESS FLOW DIAGRAM

ACID RECOVERY SYSTEM

[redacted]

[redacted]

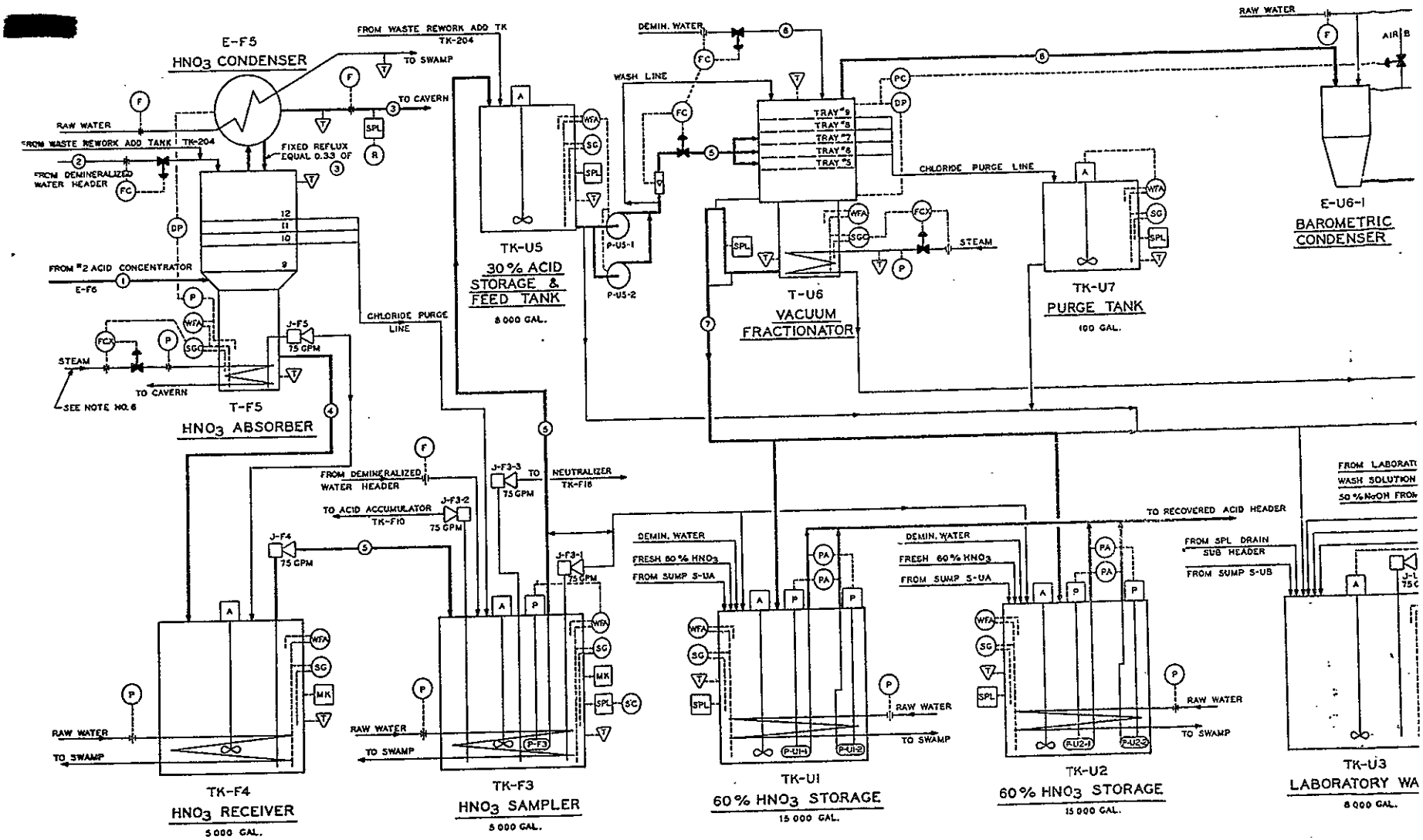

	BASIC FLOWSHEET (7)																ALTERNATE FLOWSHEET (7)															
Code	(1) ZVD-AAF		(2) SECONDARY REFLUX		(3) AAD		(4) AAA		(5) AFF		(6) REFLUX H2O		(7) AFA		(8) AFD		(1) ZVD-AAF		(2) SECONDARY REFLUX		(3) AAD		(4) AAA		(5) AFF		(6) REFLUX H2O		(7) AFA		(8) AFD	
Stream																																
G.P.M. (5)	5580 SCFM		1.63		24.96		9.94		10.24		1.99		4.27		1360 SCFM		6300 SCFM		1.83		28.26		11.19		11.53		2.23		4.82		1530 SCFM	
Components/Gal.		Wt. %		Wt. %		Wt. %		Wt. %		Wt. %		Wt. %		Wt. %		Wt. %		Wt. %		Wt. %		Wt. %		Wt. %		Wt. %		Wt. %		Wt. %		Wt. %
H_2O, lb.	7.90	89.83	8.33	100	8.31	99.82	6.88	70	6.92	70.7	8.33	100	4.55	40	8.32	99.99	7.94	89.90	8.33	100	8.32	99.92	6.88	70	5.92	70.7	8.33	100	4.55	40	8.32	99.99
HNO_3, lb.	0.89	10.12			0.01	0.12	2.95	30	2.86	29.3			6.84	60	0.01	0.12	0.89	10.07			0.0014	0.02	2.95	30	2.86	29.3			6.84	60	0.0011	0.01
BC Diluent, lb.	0.0041	0.05			0.005	0.06											0.0037	0.04			0.0019	0.05										
γ Curies	7.0×10^{-6}				2.3×10^{-9}		2.3×10^{-5}		2.3×10^{-5}				5.5×10^{-5}		5.5×10^{-9}		8.4×10^{-6}				2.8×10^{-9}		2.8×10^{-5}		2.7×10^{-5}				6.5×10^{-5}		6.5×10^{-9}	
Physical Properties																																
Specific Gravity at 25°C.	115		1.0		1.0		1.18		1.18		1.0		1.37		52		115		1.0		1.0		1.18		1.18		1.0		1.37		52	
Temperature, °C.			25		79		107		As Received		25		81						25		79		107		As Received		25		81			
Viscosity, cp25			1.0		1.0		1.3		1.3		1.0		1.5						1.0		1.0		1.3		1.3		1.0		1.5			
Phase	Vapor		A		A		A		A		A		A		Vapor		Vapor		A		A		A		A		A		A		Vapor	

NOTES:

1. Symbol Abbreviations

SPL	Sampler	SGC	Specif
SC	Scintillation Counter	WFA	Weight
pHC	pH Controller	F	Flow R
P	Pressure Recorder	FC	Flow C
PA	Pressure Alarm	FCX	Flow C
DP	Differential Pressure	R	Radiat
PC	Pressure Controller	T	Temper
SG	Specific Gravity	A	Agitat
		P	Pump

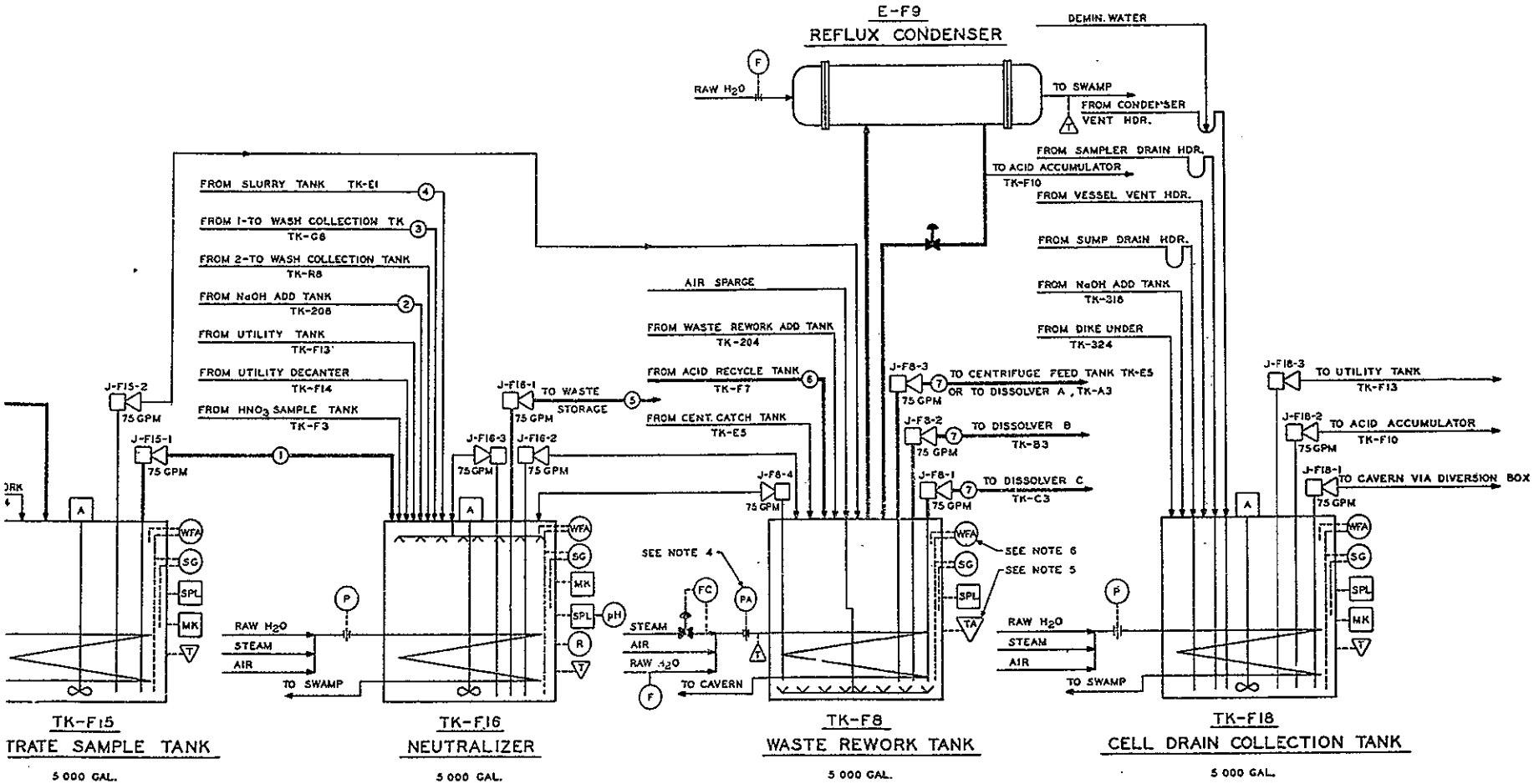

	7 Back Cycle Acid		1 2W		2 NaOH Butt		3 1DW		4 Coke Slurry		5 Neutralized Waste	
	1.33		1.10		0.42		2.02		0.03		3.57	
		Wt. %		Wt. %		Wt. %		Wt. %		Wt. %		Wt. %
	5.97	50.45	5.78	55.44	6.36	50	8.30	95.7	8.30	98.64	7.30	73.41
	3.80	37.20	3.77	36.82					0.026	0.31		
	0.15	1.47	0.26	2.54			0.04	0.4			1.67	17.94
							0.15	1.8				
							0.10	1.2				
											0.067	0.72
	0.05	0.49	0.059	0.58							0.11	1.18
	0.14	1.37	0.17	1.66								
											0.05	0.54
							0.03	0.3			0.02	0.21
							0.05	0.6			0.03	0.32
	0.014	0.16	0.027	0.26								
											0.01	0.11
					6.36	50					0.05	0.54
	0.09	0.9	0.17	1.66					0.088	1.04		
	1.6×10^{-2}		2.6×10^{-2}				7×10^{-3}		9×10^{-6}		8×10^{-3}	
	0.66		1600				0.17				500	
	1.23		1.23		1.53		1.04		1.01		1.10	
	45		45		25		45		25		25	
	1.5		1.5		90		1.0		1.0		1.5	
	1		1		1		1		1		1	

ALTERNATE FLOWSHEET (9)

NOTES:

1. Symbol Abbreviations:

- SPL Sampler
- pH pH Meter
- P Pressure Recorder
- PA Pressure Alarm
- SG Specific Gravity
- WFA Weight Factor Alarm
- F Flow Recorder
- FC Flow Controller
- R Radiation Recorder
- MK Microphone
- T Temperature Recorder
- TA Temperature Alarm

2. Drawn and calculated to a modified Purex HW #3 Flowsheet; see Figure I-4 of this manual.
3. Basis: 10 short tons of uranium per day (instantaneous rate), exposure of 600 MWD/T at 5 W/T, and 90 day cooling.
4. Steam pressure instrument to alarm and shut off steam at 25 lb./sq.in.gm.
5. Solution temperature instrument to alarm at 129°C, and shut off steam at 132°C.
6. Weight factor instrument to alarm at slightly abnormal liquid level and shut off steam at unsafe level.
7. It was assumed that TBP entering the concentrators was reduced to H_3PO_4 and hydrocarbon gases.
8. The flow rates are equivalent rates, actually all transfers and additions are on a batch basis.
9. The 2DW is routed to the Dissolvers or Centrifuge Feed Tank in the basic flowsheet and is routed to the Acid Recycle Tank in the alternate flowsheet.

FIGURE X-3

PROCESS FLOW DIAGRAM

WASTE NEUTRALIZATION SYSTEM

[redacted]

[redacted]

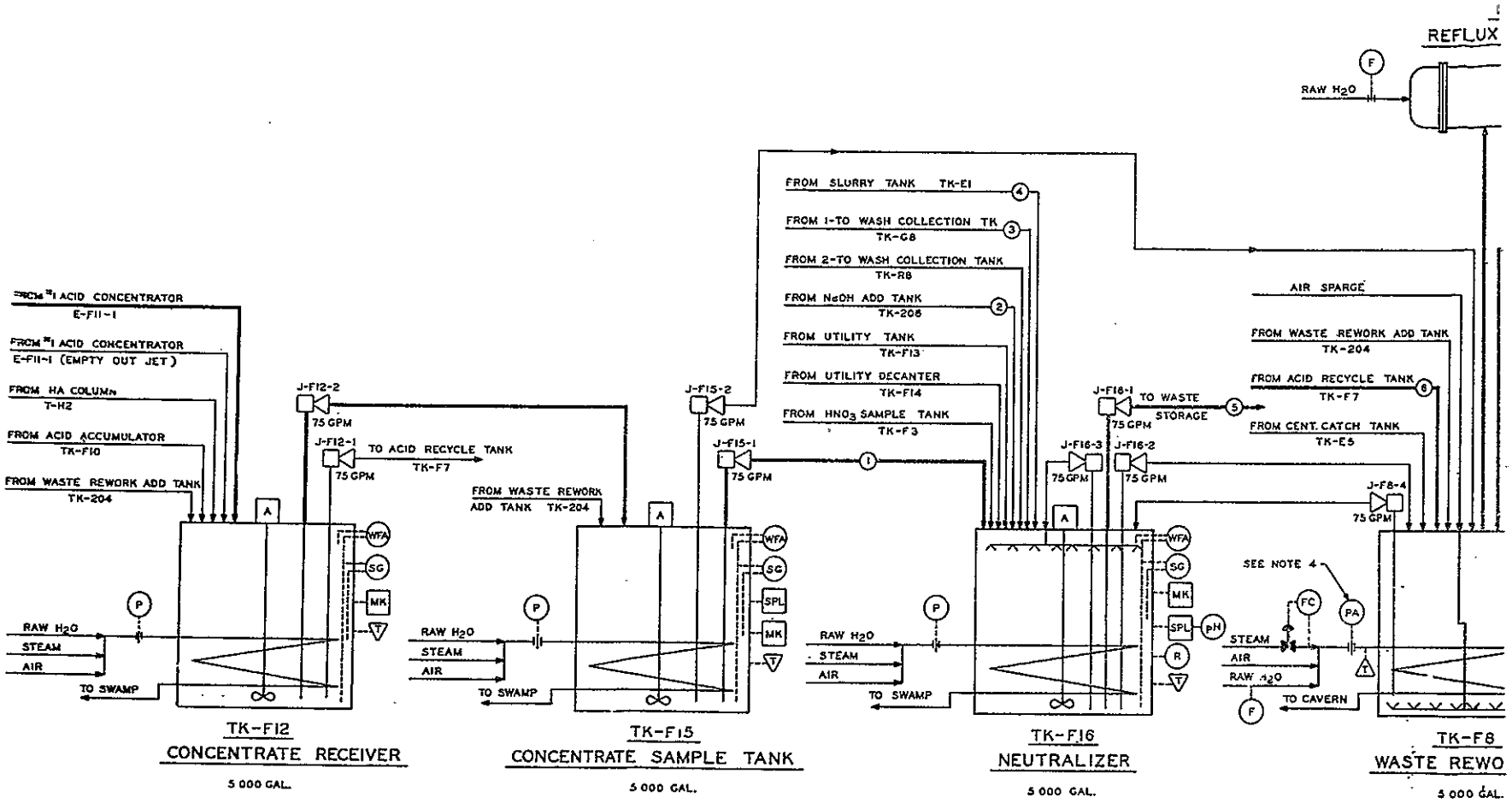

BASIC FLOWSHEET(9)																												
Code	1		2		3		4		5		6		7		ALTERNATE FLOWSHEET(9)													
Stream	1W		NaOH Butt		10W		Coke Slurry		Neutralized Waste		2W		Back Cycle Acid		1W		NaOH Butt		10W		Coke Slurry		Neutralized Waste					
Flow, G.P.M.(8)	0.77		0.29		2.02		0.03		3.11		1.29		1.33		1.10		0.42		2.02		0.03		3.57					
Components/Gal.		Wt. %		Wt. %		Wt. %		Wt. %		Wt. %		Wt. %		Wt. %		Wt. %		Wt. %		Wt. %		Wt. %		Wt. %				
H_2O, lb.	5.75	56.30	6.36	50	8.30	95.7	8.30	98.64	7.49	82.59	5.91	57.45	5.97	58.45	5.78	56.44	6.36	50	8.30	95.7	8.20	98.64	7.30	73.41				
HNO_3, lb.	3.69	36.13					0.026	0.31			3.92	38.11	3.80	37.20	3.77	36.82					0.026	0.31						
Na_2CO_3, lb.	0.36	3.52			0.04	0.4			1.38	15.22	0.16	1.55	0.15	1.47	0.26	2.54			0.04	0.4			1.67	17.94				
$Na_2Cr_2O_7$, lb.					0.15	1.8													0.15	1.8								
$Na_3(UO_2(CO_3)_3)$, lb.					0.10	1.2													0.10	1.2								
$Na_2U_2O_7$, lb.									0.05	0.55																		
Na_2SO_4, lb.	0.08	0.81							0.08	0.88	0.05	0.49	0.05	0.49	0.059	0.58							0.067	0.72				
$Fe_2(SO_4)_3$, lb.	0.24	2.35									0.14	1.36	0.14	1.37	0.17	1.66							0.11	1.18				
$Fe(OH)_3$, lb.									0.055	0.61																		
TSP, lb.					0.03	0.3													0.03	0.3			0.05	0.54				
30 Dipsect, lb.					0.05	0.6													0.05	0.6			0.02	0.21				
H_3PO_4(?), lb.	0.021	0.011																					0.03	0.32				
Na_2HPO_4, lb.									0.004	0.04	0.016	0.15	0.016	0.16	0.027	0.26												
NaOH, lb.			6.35	50					0.01	0.11													0.01	0.11				
UNS, lb.	0.08	0.8					0.088	1.04			0.091	0.9	0.09	0.9	0.17	1.66	6.36	50			0.088	1.04	0.05	0.54				
Fe, g.	9×10^{-4}				7×10^{-3}		9×10^{-6}		7×10^{-3}		1.6×10^{-2}		1.6×10^{-2}		2.6×10^{-2}				7×10^{-3}		9×10^{-6}		8×10^{-3}					
Curies/gal.	2300				0.17				560		0.68		0.66		1600				0.17				500					
Physical Properties																												
Specific Gravity	1.22		1.53		1.04		1.01		1.08		1.23		1.23		1.23		1.53		1.04		1.01		1.10					
Temperature, °C.	45		25		45		25		25		45		45		45		25		45		25		25					
Viscosity, cp.25	1.5		90		1.0		1.0		1.5		1.5		1.5		1.5		90		1.0		1.0		1.5					
Phase	L		L		L		L		L		L		L		L		L		L		L		L					

NOTES:

1. Symbol Abbreviations:

- SPL Sampler
- pH pH Meter
- P Pressure Recorder
- PA Pressure Alarm
- SG Specific Gravity
- WFA Weight Factor Alarm
- F Flow Recorder
- FC Flow Controller
- R Radiation Recorder
- MK Microphone
- T Temperature Recorder
- TA Temperature Alarm

2. Drawn and cal
this manual.
3. Basis: 10 ab
600 MWD/T at
4. Steam pressur
5. Solution temp
6. Weight factor
off steam at 1
7. It was assumo
hydrocarbon g
8. The flow rate
are on a batch
9. The 2W is rou
flowsheet and

FIGURE X-4
OPERATING DIAGRAM - ACID ABSORBER
McCABE-THIELE TYPE

BASED ON A PSEUDO-MOLECULAR WEIGHT FOR WATER OF 13.2 CHOSEN TO PRODUCE LINEAR EQUATIONS FOR THE OPERATING LINE

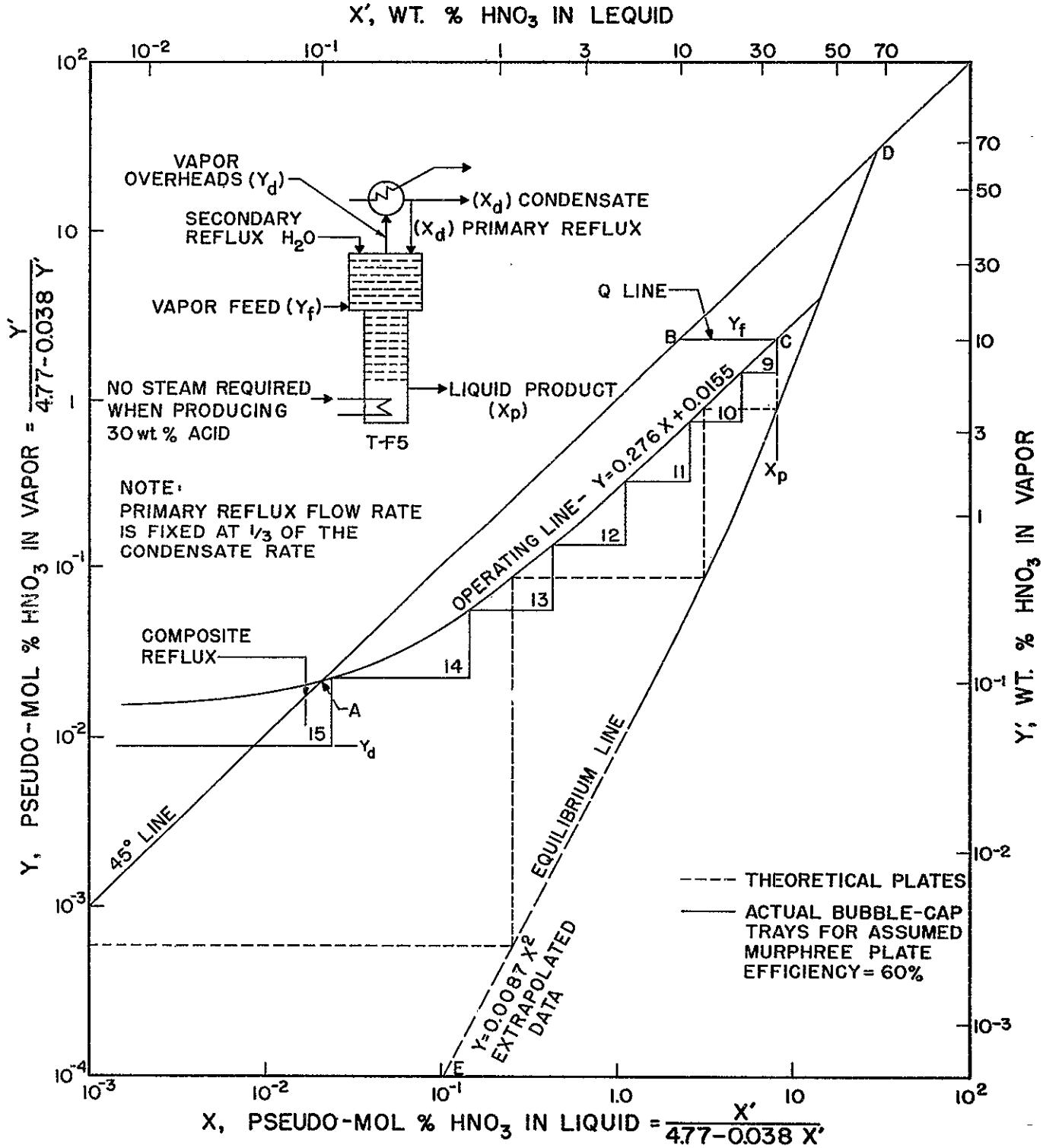

FIGURE X-5

OPERATING DIAGRAM - VACUUM FRACTIONATOR

(100 mm Hg ON TOP PLATE)
McCABE-THIELE TYPE
BASED ON A PSEUDO-MOLECULAR WEIGHT FOR WATER OF 13.2

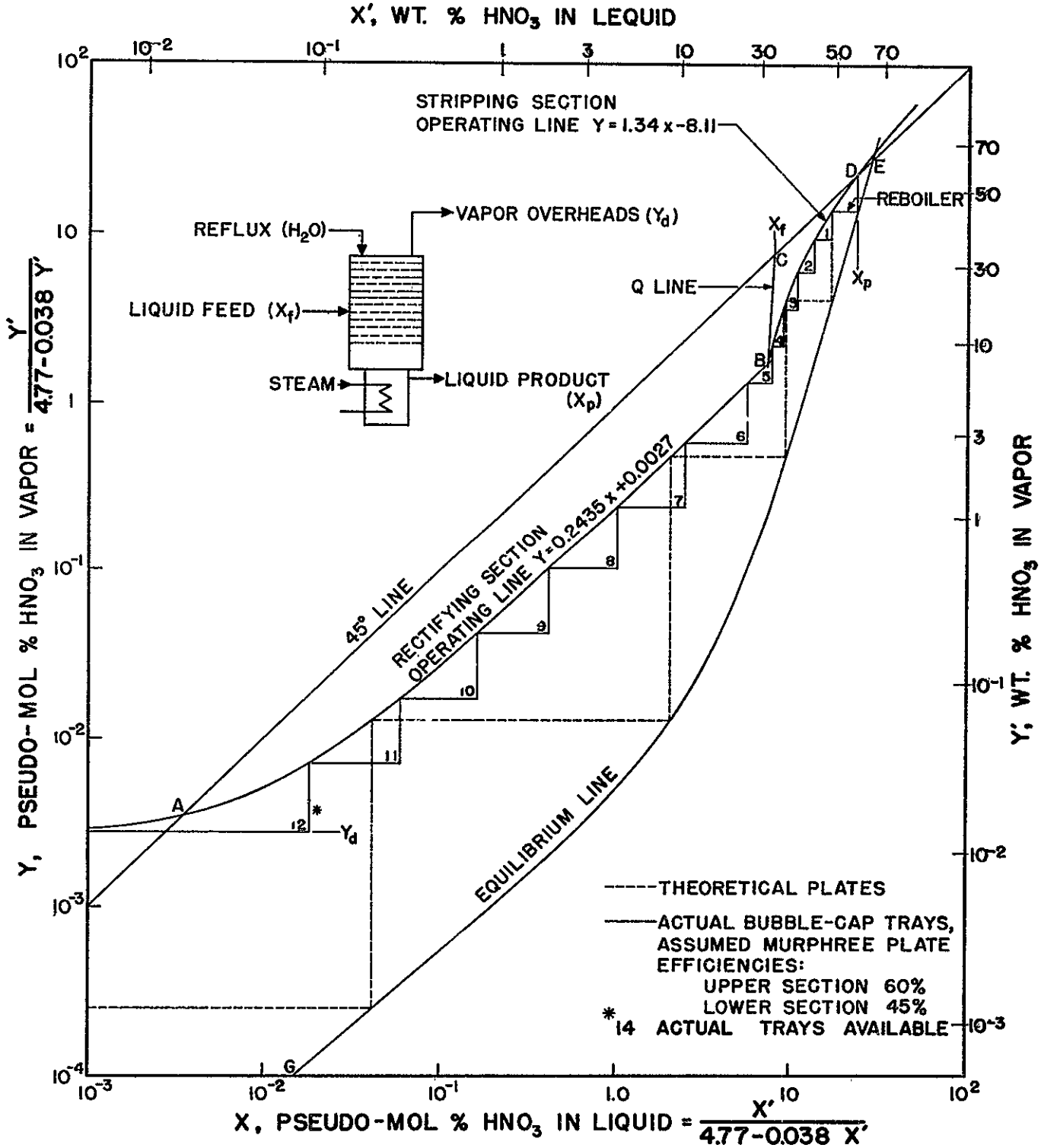

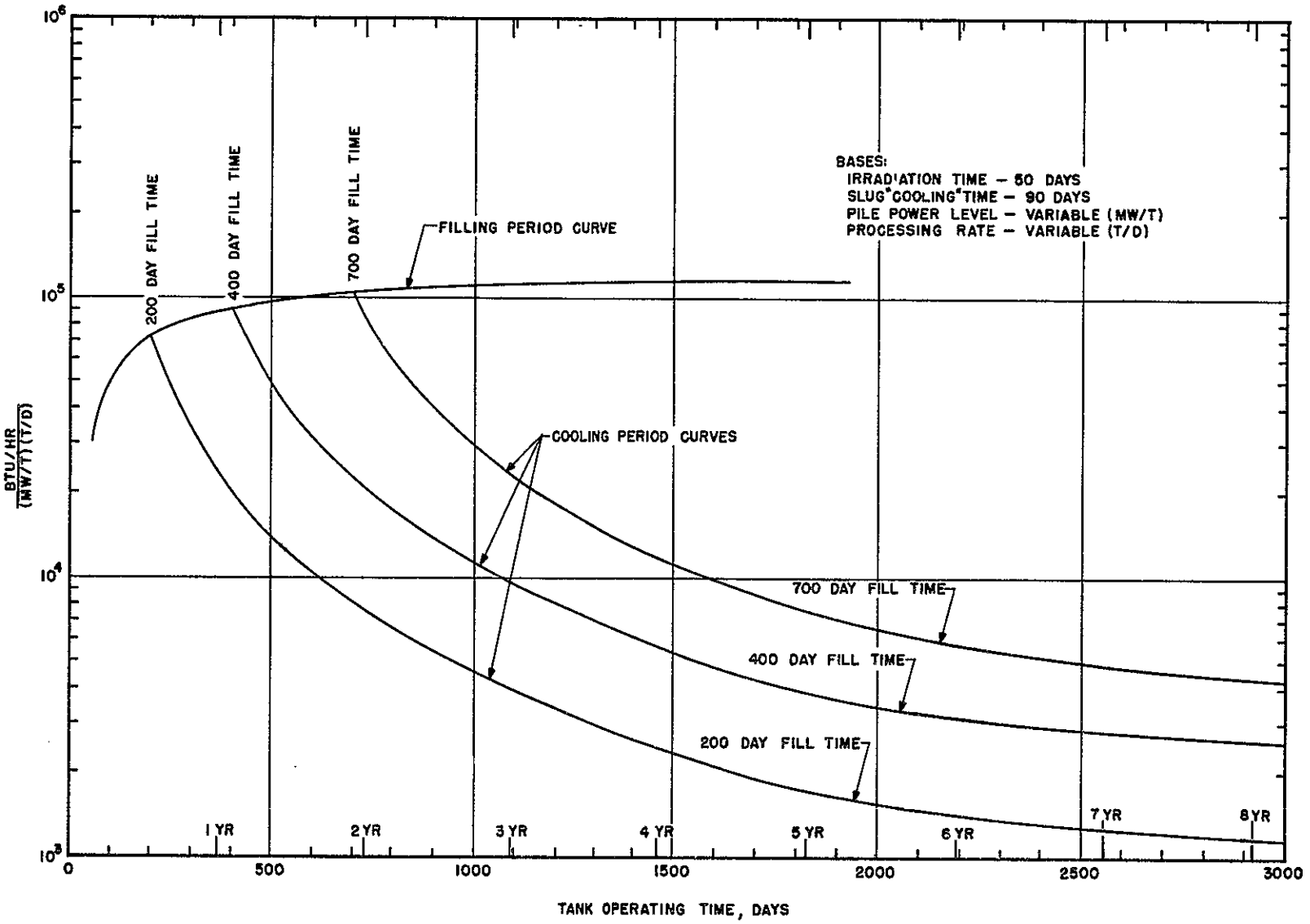

FIGURE X-6
HEAT GENERATION IN PUREX WASTE STORAGE TANKS
FOR URANIUM IRRADIATED 50 DAYS

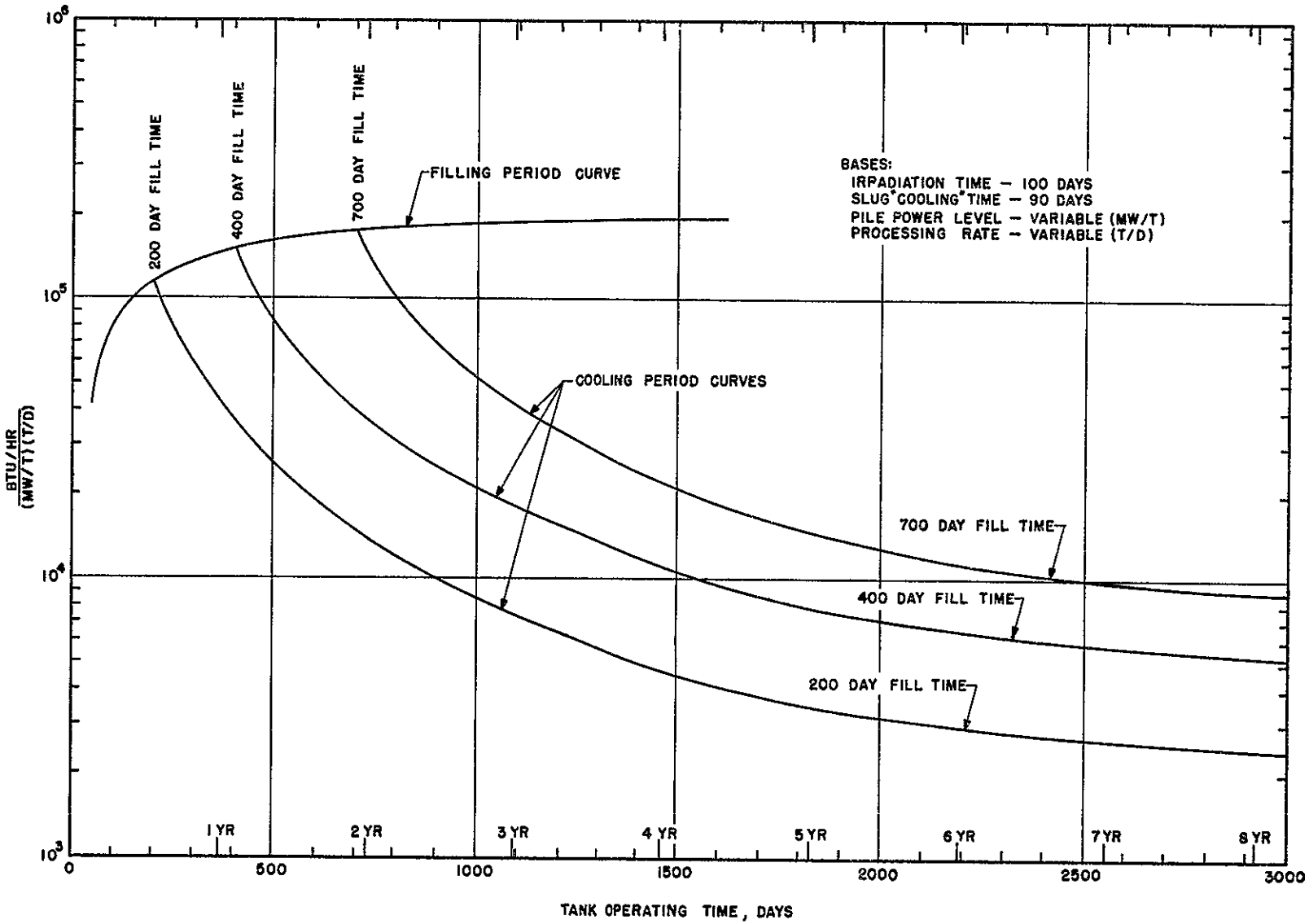

FIGURE X-7
HEAT GENERATION IN PUREX WASTE STORAGE TANKS
FOR URANIUM IRRADIATED 100 DAYS

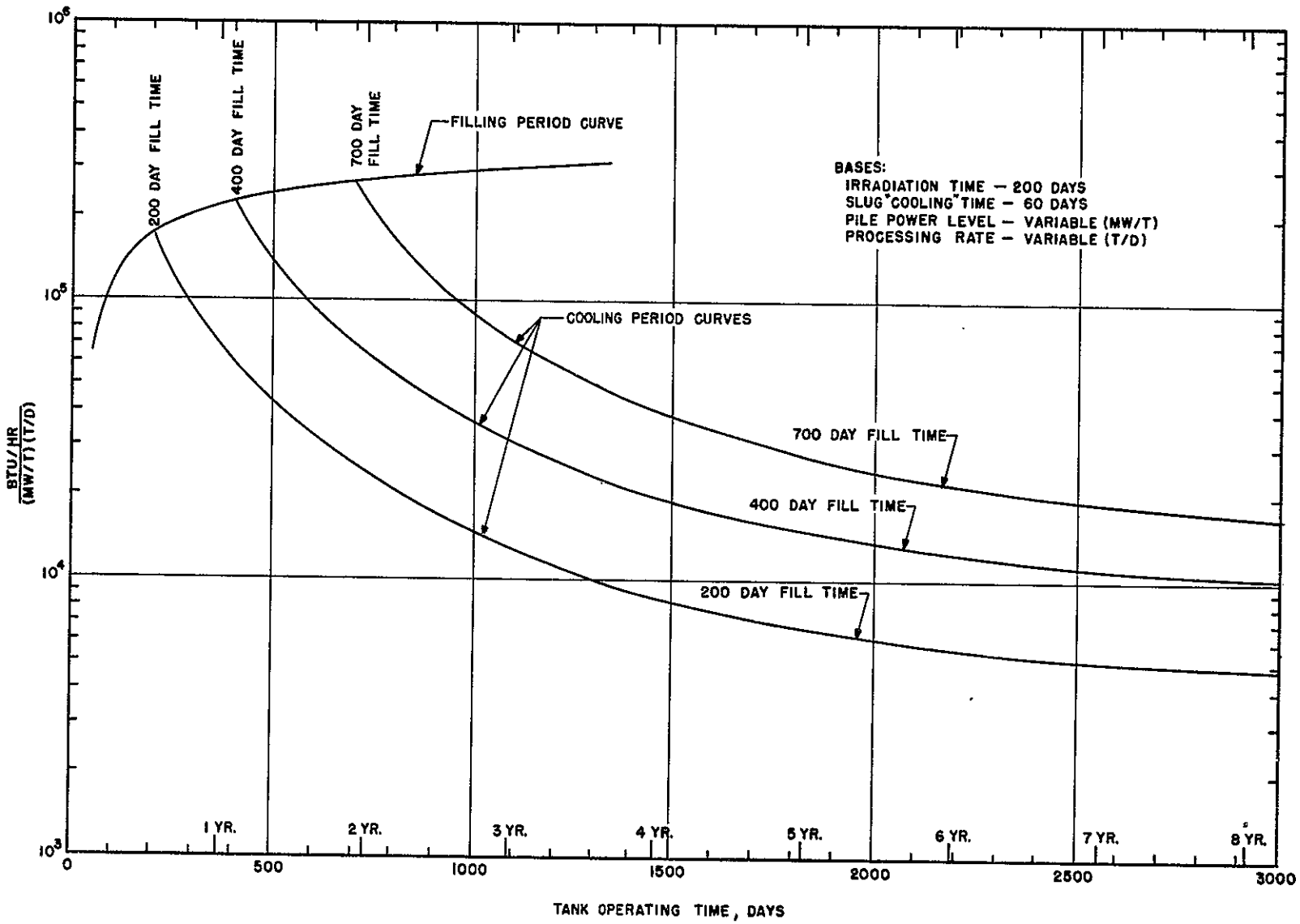

FIGURE X-8
HEAT GENERATION IN PUREX WASTE STORAGE TANKS
FOR URANIUM IRRADIATED 200 DAYS

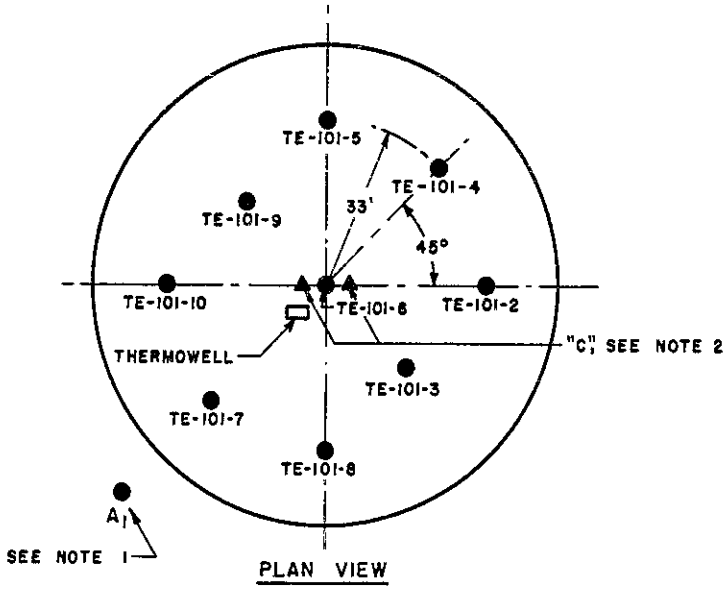

PLAN VIEW

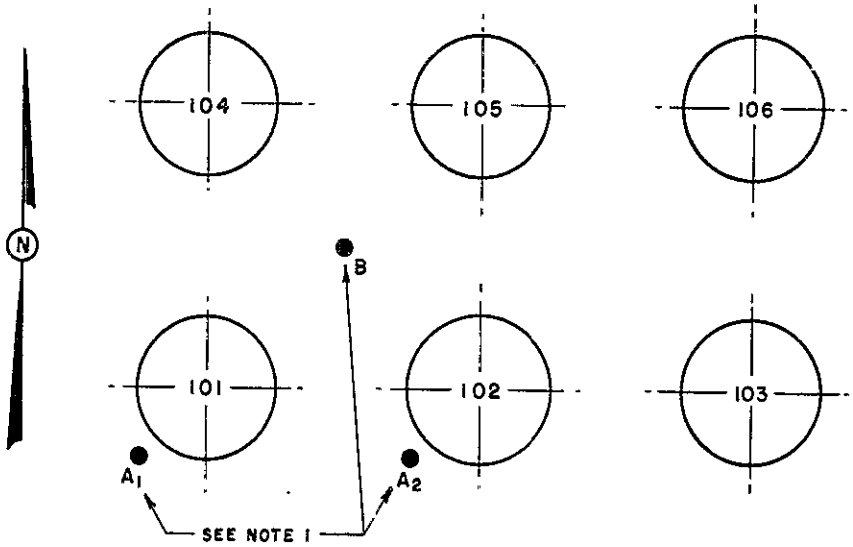

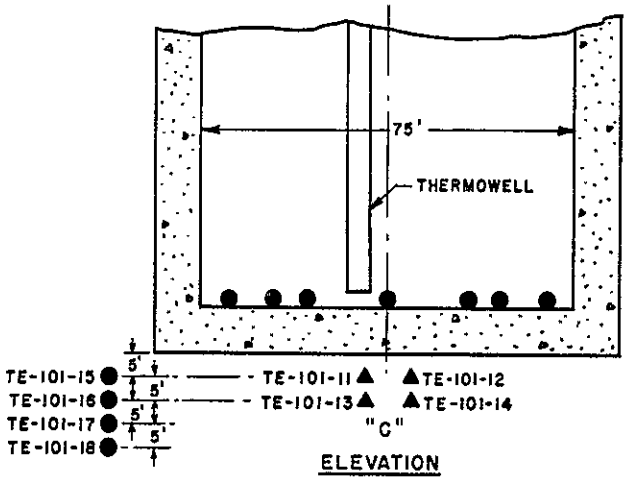

ELEVATION

NOTES: 1-THERMOWELLS A_1-A_2 & B HAVE THE SAME DETAILS & ARE LOCATED AS SHOWN ON THE PLAN ARRANGEMENT. THE FOUR TEMPERATURE ELEMENTS ARE PLACED 5, 10, 15 & 20 FEET BELOW THE HORIZONTAL PLANE AT THE BOTTOM OF THE TANK FOUNDATION.

2-THERMOWELL "C" IS BURIED IN THE EARTH BELOW THE TANK FOUNDATION ON TANK 101 ONLY. THESE ELEMENTS ARE PLACED 5 & 10 FEET BELOW THE HORIZONTAL PLANE OF THE FOUNDATION BOTTOM.

3-ARRANGEMENT OF THERMAL ELEMENTS ON THE BOTTOM OF TANK 101 (ONLY) IS SHOWN IN THE PLAN ARRANGEMENT. THE ELEMENTS ARE INSTALLED IN PIPES ANCHORED TO THE BOTTOM OF THE TANK.

FIGURE X-9

TK-101 THERMOCOUPLE INSTALLATION

PART III: PLANT AND EQUIPMENT

CHAPTER XI. GENERAL DESCRIPTION OF PLANT

CONTENTS

	Page
A. GENERAL LAYOUT OF PLANT	1102
1. Layout of Production Areas	1102
2. 200 Areas	1102
3. Purex Plant Area	1103
B. PUREX PROCESSING BUILDING, 202-A	1104
1. General Building Layout	1104
2. Canyon	1104
3. Product Removal Room	1107
4. Galleries	1107
5. Service Areas	1108
6. Laboratory	1109
7. Utilities	1110
7.1 Steam	1110
7.2 Compressed air	1111
7.3 Raw water	1111
7.4 Filtered water	1112
7.5 Electrical power distribution	1112
8. Ventilation	1113
C. OUTSIDE FACILITIES	1115
1. Air Filter and Stack, 291-A	1115
2. Chemical Storage Facilities	1117
3. Uranium Storage Tank Farm, 203-A	1117
4. Underground Waste Storage Facility, 241-A	1118
5. Waste Caverns	1119
6. Cooling Water Disposal	1119
7. "Cold" Solvent Building, 276-A	1120
8. Acid Storage Vault	1120
9. Vacuum Fractionator Building	1120
10. Equipment Disposal Facility	1120
D. MASTER DRAWING LIST	1121
REFERENCES	1122
LIST OF TABLES AND FIGURES	1123

CHAPTER XI. GENERAL DESCRIPTION OF PLANT

This chapter presents a general description of the buildings and other facilities constituting the Purex Plant. The main emphasis is on architecture, general equipment layout, and utility services. Detailed descriptions of equipment are presented in Chapters XII, XIII, XIV, and XV. Also included in this chapter is a Master Drawing List giving a selected list of drawings which will be useful in finding specific details about equipment, equipment functions, and arrangement.

A. GENERAL LAYOUT OF PLANT

1. Layout of Production Areas

The philosophy of widely separated and independent production facilities as originally planned at the Hanford Atomic Products Operation (H.A.P.O.) has been followed throughout recent plant expansion programs including the Purex Plant. In general, the production area sites and servicing facilities have been selected to ensure continuity of plant operation in the event of difficulties arising within individual areas.

The separations plants' sites and parallelism also reflect this principle of diversification. Thus, the Bismuth Phosphate process operating in conjunction with the Uranium Recovery (TBP) process performs the same individual functions of the Redox or the Purex Plant.

Production areas of H.A.P.O., shown in Figure XI-1, are classified into three groups: the 100, 200, and 300 Areas.

The uranium metal is machined and canned in the 300 Area and sent to the 100 Areas for processing in any one of the eight piles. Following pile irradiation and "cooling" in the pile basins, the uranium is sent to the 200 Areas for separation and recovery of uranium and plutonium.

2. 200 Areas

The three 200 Areas, located from 6 to 10 miles south of the 100 Areas are: 200 East, 200 West, and 200 North.

The 200 North Area, which at present is not being used, contains facilities for the storage of metal after its discharge from the piles.

The 200 West Area contains the following facilities: (a) power and service facilities; (b) T Plant, a producing $BiPO_4$ precipitation plant for plutonium recovery from irradiated slugs (Buildings 221-T and 224-T); (c) Z Plant, comprising plutonium isolation and fabrication facilities (Buildings 231 and 234-5); (d) the Uranium Recovery Plant for recovery of uranium, by TBP extraction, from $BiPO_4$ wastes and calcination of recovered uranyl nitrate solution to UO_3 (Buildings 221-U and 224-U); and (e) the Redox Plant, housing a process to separate, decontaminate, and recover uranium and plutonium from irradiated slugs (Building 202-S).

The 200 East Area contains the following: (a) power and service facilities; (b) B Plant, an inactive $BiPO_4$ precipitation facility (Buildings 221 and 224-B); and (c) the new Purex facility (Building 202-A). The function of Purex is to supplement the H.A.P.O. solvent-extraction separations capacity in addition to that furnished by the Redox facility.

3. Purex Plant Area

The Purex Plant is located in the eastern section of the 200 East Area (as shown on Figure XI-2) and consists of the following installations located as shown in Figures XI-2 and XI-3.

Installation No.	Name	Function
202-A	Processing Building (a) Process side	(a) Metal dissolution. (b) Separation and decontamination of uranium and plutonium. (c) Waste handling. (d) Solvent recovery.
	(b) Service side	(a) Offices. (b) Control laboratory. (c) Aqueous make-up of process chemicals. (d) Storage, sample and process control galleries.
211-A	Chemical Tank Farm	Bulk storage of liquid chemicals (aqueous and organic).
276-A	"Cold" Solvent Bldg.	"Cold" organic treatment.
203-A	Uranium Storage Tank Farm	Storage of decontaminated UNH from the process.
291-A	Fan House and Process Stack	(a) Air exhaust ventilating equipment from 202-A Building. (b) Dilute Dissolver off-gas.
2714-A	Warehouse	Sodium nitrate storage.
241-A-151 241-A-152	Diversion Boxes	Route waste and other streams to outside facilities.
241-A-201	Cooling Water Tank	Water supply for 241-A condensers.
241-A	Underground Storage Tank Farm.	Storage for high radioactive wastes.

Installation No.	Name	Function
216-A1 through A8	Waste Caverns	Waste disposal provision for low radioactive waste streams.
272-E	Mock-Up Shop (old Bismuth-Phosphate Mock-Up Shop)	To mock up jumpers and equipment for installation in 202-A Building.
2901-A	High Storage Tank	Emergency supply of filtered water.

B. PUREX PROCESSING BUILDING, 202-A

1. General Building Layout

The Purex Processing Building, 202-A, is a long narrow structure 1005 ft. in length, 119 ft. in width at its widest point, and 64 ft. above grade. The building consists of three main structural components: a heavily shielded concrete portion in which the equipment for radioactive processing is contained; a pipe, sample, and storage gallery section; and a steel-and-transite annex which houses the building services. The shielded portion, or Canyon, extends approximately 40 ft. below grade and is subdivided into a row of process-equipment cells, a "hot" pipe trench and ventilation air tunnel arranged parallel to the cells. The area above the cells and "hot" pipe trench contains the craneways for two gantry-type maintenance cranes. The galleries which are arranged one above the other adjacent to the Canyon contain service piping to the cells, samplers for obtaining process samples and storage space for dry chemicals and telephone switchgear. Offices, locker rooms, laboratory facilities, ventilation equipment rooms, electrical switchgear, main operating control panels, and aqueous make-up facilities are all located in the steel-and-transite portion of the building. Figures XI-4, 5, 7, and 8 illustrate the building arrangement.

2. Canyon

2.1 General description

The Canyon contains a single 813-ft.-long row of equipment cells 14 ft. wide, and 39 ft. 6 in. deep, running east and west. A heavy concrete shielding wall, 6 ft. thick, separates the cells from the galleries. Above the cells the concrete shield wall is 4 ft. thick, and the extension of this wall upward forms a shielded cabway (Crane Cab Gallery) for the Master Crane. A Slave Crane, which may be operated either directly and independently or remotely from the Master Crane controls, is provided on railways above the Master Crane level.

The Pipe Trench which parallels the cells is 30 ft. 6 in. deep and 12 ft. wide at the top and narrows to 11 ft. as the wall between the cells and the Pipe Trench thickens from 1 ft. 6 in. to 2 ft. 6 in. The wall between the cells and the Pipe Trench supports one edge of the 3-ft.-thick

cover blocks which cover the cells and the 2.5-ft.-thick cover blocks which cover the Pipe Trench. The Air Tunnel, which lies directly below the Pipe Trench, is 11 ft. wide and 7 ft. 6 in. high. This tunnel exhausts the ventilation air from the cells to the outside stack facility. The south wall of the Canyon at the Air Tunnel and Pipe Trench levels is 5 ft. 6 in. thick. From the Canyon deck level to the Master Crane level the south wall is 4 ft. thick and again narrows to 2 ft. 6 in. in thickness from the crane level to the roof. The roof is formed as a concrete beam 2 ft. 6 in. thick at the edges and 1 ft. thick in the center. There is no internal truss work used to support the ceiling of the Canyon.

The Railroad Tunnel which is used for bringing in casks of irradiated slugs and removing equipment from the Canyon, runs north and south forming a "T" on the east end of the Canyon cells. On the east side of the Railroad Tunnel is a water-filled storage basin for storing irradiated slugs. The Pool Cell for storing "hot" equipment, the Decontamination and Storage Cell, and the Hot Shop are located just west of the cell row at cell floor level. A 3-ft. shield wall separates the Hot Shop from the Decontamination Cell. The Crane Maintenance Platform is located above the Canyon Lobby at Crane Cab Gallery level at the west end of the building.

Plan views of the Canyon at four levels are shown on Figures XI-5 and XI-6. Longitudinal and transverse sections of the building are shown in Figures XI-7 and XI-8.

There are twelve "cells" in the Canyon, designated as follows:

Cell A - Dissolver Cell
Cell B - Dissolver Cell
Cell C - Dissolver Cell
Cell D - Metal Solution Storage Cell
Cell E - Metal Solution Preparation Cell
Cell F - Waste Treatment Cell
Cell G - Organic Treatment Cell
Cell H - Co-Decontamination Cycle Cell
Cell J - Partition Cycle Cell
Cell K - Uranium Decontamination Cell
Cell L - Plutonium Decontamination Cell
Cell M - Equipment Decontamination Cell

The above "cell" designations are made according to the individual processing functions and do not indicate a physical partitioning of one "cell" from another. The actual locations of transverse partitions in the Canyon were determined by ventilation and radiation criteria, rather than by nominal "cell" boundaries.

2.2 Canyon piping

Short intra-cell transfers between adjacent pieces of equipment are made by direct jumper piping connections within the cell. Longer transfers require jumpers to the Pipe Trench wall, and the connections are made via the Pipe Trench piping, which terminates on the trench wall opposite the equipment piece being connected. The Pipe Trench also contains "hot"

process and servicing headers for the equipment in the cells. The Pipe Trench contains three spare systems besides the spare process line intended for occasional use at current flowsheet conditions. These systems are known as General Spare Systems No. 1, No. 2, and No. 3. The No. 1 system consists of a "scallop pattern" of lines in the Pipe Trench terminating with horizontal male connectors on the trench wall of the cells. By using short "hairpin" jumpers, connecting adjacent lines, it is possible to accommodate most jet or pump transfers. The No. 2 system is similar to the No. 1, except that there are connectors both in the Pipe Trench and the cell. By installing the "hairpin" jumpers in the trench, transfers can be made much the same way as with the No. 1 system. The No. 3 system consists of pipe stubs spaced at 40-ft. horizontal intervals in the Pipe Trench. These stubs originate as vertical connectors in the Pipe Trench and terminate with blanked ends outside the south shield wall of the building. By use of this system in connection with the No. 2 system, it is possible to connect the Canyon vessels to future outside facilities. A perspective view of a typical cell showing jumpers installed is shown in Figure XI-9. Schematic Canyon flow plans are shown on Figures XI-10, XI-11 and XI-12.

2.3 Special Canyon features

2.31 Water fog

Water fog fire protection is provided in all process cells through nozzles spaced 9 ft. to 12 ft. apart. The nozzles are located above all pipe connectors and may also serve for cell equipment wash-down purposes. A 6-in. raw water header supplies water to separate sets of nozzles in each cell through feeder lines equipped with diaphragm-operated valves for flow control. In case of raw water failure, there is a line which extends through the north side of the building for connection of a pump truck to the system.

2.32 Fire detection

Photoelectric (Fireye) fire detection units are positioned approximately every 40 ft. through the cells, depending on available circuits on the gallery-side electrical jumpers. The fire detection units activate an alarm in the Central Control Room.

2.33 Vacuum cleaning

Accumulations of dust and/or sand on the Canyon deck act as a vehicle for carrying radioactive particulate material. The Canyon deck is furnished with a vacuum system to facilitate the removal of this material. The system consists of a centrally located exhauster and filter and a header system with 19 outlets along the Canyon deck and 2 outlets on the Crane Maintenance Platform. A hose with a cleaning nozzle attached can be plugged into any of these outlets. The exhauster and filter are located in a concrete pit outside the building. The filtered exhaust air from the system is sent to the ventilation air exhaust duct.

2.34 Wash-down nozzles

A series of wash-down nozzles is provided 5 ft. off the cell floor, with special nozzles at different levels aimed at equipment particularly susceptible to contamination. The special nozzles have individual controls separate from the main cell wash-down controls.

2.4 Vessel and condenser vent systems

All non-boilup vessels in the Canyon are vented to the Vessel Vent Header which runs the length of the Pipe Trench. A jet in Cell F maintains vacuum on this header. The boilup vessels in the Canyon are vented through their condensers to the Condenser Vent Header in the Pipe Trench. Vacuum is maintained on this header by a jet in Cell F. The jets on the vessel and condenser vents discharge into a common condenser. The non-condensables from this condenser are routed through a gas heater, a silver reactor, and a filter before being discharged into the Air Tunnel. The vessels in the "Cold" Solvent Building, 276-A, the Acid Storage Vault, and the PR Room are vented through three separate systems consisting of blowers discharging directly into the Air Tunnel.(2) The vacuum on all of the vent systems is controlled by an air bleed.

3. Product Removal Room

The Product Removal (PR) Room and the PR Vault are located at the west end of the Storage Gallery adjacent to L Cell. The PR Room is 41 ft. 2 in. long and 19 ft. 6 in. wide and contains three concrete shielded areas to isolate the Vacuum Tank and the two Plutonium Sampler Tanks from the working area. The PR Can loading facilities and the decontamination equipment are enclosed in a stainless-steel framework covered with transparent Lucite panels. Operation of the equipment within the enclosure is conducted from outside the hood by means of extension handles on the valves. An overhead electric-powered hoist is used for handling the PR Cans while weighing and for placing them in jackets before shipment or storage in the PR Vault. A doorway from the PR Room provides access to L Cell for possible contact maintenance of the Plutonium Concentration Unit. Equipment and room layout are shown in Figure XI-13.

4. Galleries

4.1 General

The galleries are located on the north side of the Canyon. The Storage, Sample, Pipe and Operating, and Crane Cab Galleries parallel the Canyon and are located at progressively higher levels. The Storage Gallery is 19 ft. 6 in. wide and has a floor area of 15,900 sq.ft., while the Pipe and Operating, Crane Cab, and the Sample Galleries are 20 ft. wide and have floor areas of about 19,000 sq.ft. each. The details of the galleries and their relationship to the rest of the building are shown in Figures XI-5, XI-6, and XI-8.

4.2 Storage Gallery

The main function of this area is storage of dry chemicals and excess equipment. A 5-ton-capacity elevator serves the Storage Gallery together with the Pipe and Operating Gallery and the four floors of the Aqueous Make-Up Facility. The Telephone Relay Room and motor-generator sets for furnishing variable-frequency power to the pulse generators are located in this gallery.

4.3 Sample Gallery

The Sample Gallery contains the remote samplers for obtaining process solution samples from the cell equipment. The samples are sent to the Sample Receiving Room in the laboratory by a dumbwaiter. A shielded pipe chase behind the remote sampler boxes contains headers for recovered nitric acid, solvent, sampler drain, and sampler box lines to and from the cell equipment. Spares for the acid and solvent headers are also installed in this pipe chase. The main access to the Sample Gallery is from the SWP Room. Other facilities in the Sample Gallery include:

(a) Diaphragm-operated valves and rotameters for control of recovered acid and solvent feeds to the columns.

(b) A central dumbwaiter to convey waste material between the Sample Gallery and the loading dock.

(c) Two vacuum pumps for sampling air throughout the building are located at the west end of the gallery.

4.4 Pipe and Operating Gallery

The Pipe and Operating Gallery provides space for the non-radioactive piping and associated gang valves which serve the in-cell equipment. Since most of the valves are controlled from the control panels, only a minimum number of operations are required in this gallery. A few batch-wise chemical addition tanks are located along this gallery.

4.5 Crane Cab Gallery

The Crane Cab Gallery provides a shielded area so that under no condition is the cab or the operator, when entering or leaving the cab, in a direct radiation area. The west end of the gallery opens onto the Crane Maintenance Platform. The routine access to the Crane Cab Gallery is from a stairway leading from the SWP Room.

5. Service Areas

The service portion which lies just north of the galleries consists of two separate annexes. The east annex is a two-level structure 216 ft. long, 56 ft. wide, and 29 ft. 8 in. high, while the west annex is a five-level structure 490 ft. 3 in. long, 56 ft. wide, and 62 ft. 1 in. above

grade at the highest point. The larger annex contains the Maintenance shops, offices, lunchroom, locker, SWP Room, Blower Room, a switch gear room, Compressor Room, Central Control Room, and the Aqueous Make-Up Facility. The smaller annex contains the Analytical and Control Laboratory, the Head-End Control Room, and a switch gear room. The arrangement of these facilities is illustrated in Figure XI-5 and XI-6.

6. Laboratory

6.1 Layout

The Purex Analytical and Control Laboratory, located in the western end of the east service annex, is 144 ft. long and 56 ft. high. The first floor, containing the Laboratory work area and sanitary, lunch, and change facilities, is on the same level as the Pipe and Operating Gallery. Because of radiation shielding considerations, the walls and floor are made of reinforced concrete. The second floor, which houses the ventilation equipment and service piping, has transite siding.

Figure XI-14 shows the layout of the Laboratory work area, lunchroom, change rooms, and accesses to the rest of the building.

6.2 Laboratory utilities

The Ventilation and Equipment Room (the second floor of the Laboratory) houses all the piping, ventilation duct work, and special miscellaneous equipment for servicing the first floor of the Laboratory. The ventilation equipment, supply and exhaust units, filter boxes, etc., are discussed under 8.23, below. Utilities and services are supplied to the Laboratory via headers routed in common raceways located in this room. Services to each room in the Laboratory are brought through the ceiling and terminated at the various benches and tables. Service branches from the main building utilities include sanitary water, steam, instrument air, 60% commercial nitric acid, air sampling piping, and breathing air. A still and a vacuum pump are located in the Ventilation and Equipment Room and provide the Laboratory with distilled water and vacuum.

A 100-gallon carbon steel tank supplies 93% sulfuric acid to the Laboratory. The tank is refilled as required from the 211-A Chemical Tank Farm.

Methane, oxygen, and propane gas are piped to the laboratory hoods from a central gas cylinder station located on the Laboratory's north loading dock.

6.3 Laboratory waste disposal facilities

Three types of wastes to be disposed of from the Laboratory working area are: solid waste, sink drainage, and sample slurping-hood drainage.

A small rectangular vault provided for the solid wastes is located at the end of the corridor leading to the loading dock. The vault has 8-inch-thick concrete walls and contains a lead box with 5-inch-thick walls. The highly radioactive solid wastes are stored in the lead box while the less active wastes are stored on the floor of the concrete shielded vault.

Two doors open from the vault to the loading dock for transferring the waste to a vehicle, one from the lead box and one from the vault proper.

The sink drainage is collected in one of two 8000-gallon stainless-steel tanks located in the Acid Storage Vault east of the annex. The solution is sampled, neutralized and jetted to the Laboratory and Cell Drainage Cavern, 216-A4.

"Hot" liquid wastes accumulated in the decontamination-room receiving and slurping hoods are routed to the Acid Accumulator Tank (TK-F10) in the Process Waste System. A water jet (aspirator) is used to slurp and dilute the solution.

7. Utilities

7.1 Steam

The Power House, 284-E, supplies 225-lb./sq.in.ga. (450°F.) steam to an 18-in. overhead line which runs to the Purex area. At the northwest corner the line divides into an 8-in. line and a 16-in. line. The 8-in. line supplies high pressure steam to the heating and ventilation equipment, outside facilities, and one end of the Silver Reactor steam header. The 16-in. line divides into two 14-in. lines which enter opposite ends of the Pipe and Operating Gallery. The loop is completed within the gallery by connecting the two 14-in. lines with a 16-in. header and a 2-in. header. The 16-inch and 2-inch headers are maintained at 100 lb./sq.in.ga. and 25 lb./sq.in.ga., respectively, by pressure reducing stations. The 100-lb./sq.in.ga. header supplies the steam jets, some tank coils and 30-lb./sq.in.ga. steam to the concentrators through individual pressure reducing valves. The 25-lb./sq.in.ga. header supplies the majority of the tank coils and all service drops. A 2-in. line branches off the 225-lb./sq.in.ga. line at the east end of the building to supply the Silver Reactor steam header and form a high pressure loop with the tie-in from the outside facilities heating and ventilation steam supply. High-pressure steam to the emergency exhaust turbine-driven fan is supplied from the 14-in. line before it enters the east end of the building. The steam turbine and the Off-Gas Heaters have first priority on high-pressure steam. At any time if the demand drops the steam pressure on the system lower than 185 lb./sq.in.ga. other users are throttled back to maintain this minimum pressure.

7.2 Compressed air

7.21 Service air

Service air at 100 lb./sq.in.ga. is supplied by two 1000-std.cu. ft./min. two-stage air compressors driven by 200-hp. synchronous electric motors that are located in the Compressor Room. One of the two compressors is a standby for the other. Air flows from the compressors through an aftercooler into a 4-ft. O.D. by 12-ft. air receiver. From the receiver the air passes through an 8-in. line to oil-vapor filters. After the filters, the air line divides into a 4-in. header that serves the Sample Gallery and a 6-in. header that serves the Pipe Gallery.

Service air is used for blowing down jet transfer lines, operating dissolver and vent jets in the event of steam failure, blowing steam sparger lines to prevent "suck-back", blowing water from tank jackets and coils to prevent "water hammer" upon introduction of steam to the jacket or coil, and for operating sampler jets.

7.22 Instrument air

Instrument air at 80 lb./sq.in.ga. is supplied by a Nash Hytor rotary water-sealed compressor of 370-std.cu.ft./mm. capacity, driven by a 200-hp. electric motor and located in the Compressor Room. The air flows from the compressor through a water separator into a 4-ft. O.D. by 12-ft. receiver. The air then passes through two regenerative-type air dryers operating in parallel to a 4-in. line which runs approximately to the mid-point of the 3-in. gallery header. Subheaders furnish instrument air to the outside facilities and the Aqueous Make-Up Facility.

7.23 Breathing air

Breathing air at 50 lb./sq.in.ga. is supplied by a Nash Hytor rotary water-sealed compressor of 105-std.cu.ft./min. capacity, driven by a 40-hp. electric motor that is located in the Compressor Room. The air passes through a water separator into a 3-ft. 6-in. O.D. by 9-ft. receiver. The air then passes through a filter to a 3-in. line which branches into a 2-in. header in the Sample Gallery and a 2-in. header in the Laboratory Ventilation Equipment Room. Outlets and branch lines from these headers provide breathing air in the Sample Gallery, Laboratory, Regulated Shop, Railroad Tunnel, Decontamination Cell, Hot Shop, PR Room, 276-A Building, Crane Maintenance Platform, Acid Storage Vault, and Laboratory Ventilation Equipment Room.

7.3 Raw water

Raw water at 100 lb./sq.in.ga. is supplied to the Purex area from Building 282-E by a 24-in. underground line. This line divides into two 20-in. lines which enter opposite ends of the 18-in. Pipe and Operating Gallery header to form a loop. A 6-in. fire fog supply connects into each end of this header and runs as a separate line. A 3-in.

header ties in at both ends of the 18-in. header and runs the length of the Sample Gallery. An 8-in. line to the Tank Farm Cooling Water Tank 241-A-201 ties into the east end of the 18-in. raw water header. The Tank Farm also has a 6-in. raw water line connecting to "C" Tank Farm. These two raw water supplies to the Tank Farm are not normally used.

Raw water is used for cooling water, fire fog, and cell washdown.

7.4 Filtered water

Filtered (sanitary) water is used in the 202-A Building for safety showers, operating area washdown, drinking and toilet facilities, and for making demineralized water. (See Chapter VIII for details on demineralized water.) The filtered water is supplied to the Purex area by a 12-in. underground line from the Filter Plant 283-E. This line branches to supply outside facilities and then divides to enter the 202-A Building at both ends of the Pipe and Operating Gallery. Seven fire hydrants are situated on the filtered water line as it makes the loop around the building.

7.5 Electrical power distribution

7.51 Main power supply

The main power supply to the Purex facility is carried by two separate 13.8-kv. power lines to the 13.8-kv. Switching Structure, 252-A, located north of the 202-A Building. One line is supplied from the 252-E Substation and the other from the 251 Substation. Either line is capable of carrying the entire plant load. After the 13.8-kv. Switching Station each main power line supplies a 13.8/2.4-kv. transformer. Both of these transformers are rated at 3750 kva. and have provisions for additional cooling fans if needed for increased capacity. These transformers are located on concrete pads near the east end of the 202-A Building.

7.52 2.4/480-v. transformers

Two 2.4/480-v. substations are located just outside of the 202-A Building; one near the 13.8/2.4-kv. substation and the other near the west end of the building. Each of these substations includes two 1000-kva. transformers for normal service and one 500-kva. transformer for emergency service. (See discussion of emergency service below.) The normal service transformers have provisions for adding cooling fans if additional capacity is required.

7.53 Emergency 2.4-kv. power supply

Normally, the 3750-kva. transformers supply 2.4 kv. to three main bus bars. One of these bus bars feeds all of the circuits considered essential in the event of a main power supply failure. Emergency power at 2.4 kv. is supplied by a 750-kw. turbogenerator located in the Power

House, 284-E. If the main power supply fails, an electrical outage of about 15 seconds will occur until the emergency turbogenerator reaches full load speed at which time the emergency circuits are automatically energized. Batteries, located in the Battery Room, supply the power for throwing switch gear during the 15-second outage.

The emergency circuits are listed below:

1. From the 2.4-kv. emergency bus bar:
   (a) Fence and Guard Tower lighting.
   (b) Instrument air compressor.

2. From the east 2.4-kv./480-v. emergency transformer:
   (a) East sample hood exhaust fan.
   (b) Laboratory exhaust fans.
   (c) Breathing air compressor.
   (d) Emergency lighting.
   (e) Instrument power.
   (f) Centrifuges G-E2, G-E4, G-G3.
   (g) Agitator A-F16 (Neutralizer).

3. From the west 2.4-kv./480-v. emergency transformer:
   (a) West sample hood exhaust fan.
   (b) PR Room exhaust fan.
   (c) Air sampling vacuum pumps.
   (d) Emergency lighting.
   (e) Instrument power.
   (f) Agitators A-J5-1 and A-J5-2 (2AF Tank).
   (g) Centrifuges G-R3, G-R4, G-G4.

8. Ventilation

8.1 General

The ventilation system is designed to insure that the normal work areas are at all times free of potentially contaminated air from special hazard zones. The ventilation air is supplied by four systems: Canyon, Sample Gallery, Service Area, and Laboratory.

A schematic diagram of the 202-A Building ventilation system is shown in Figure XI-15. This diagram indicates the supply source, the air changes per hour, pressure, direction of air flow, and the exhaust method for all areas of the building.

8.2 Ventilation equipment

8.21 Process Blower Room

Four process air supply units, each consisting of louvers, preheaters, washer, and blower, are contained in the Process Blower Room located in the west service annex. Two of these units supply air to the Canyon, while the other two supply the Sample Gallery, PR Room, Regulated Shop, and the Canyon Lobby. Each Canyon supply unit is rated at 70,000 std. cu.ft./min. and has reheaters packaged into the units. Normally, these

units will operate in parallel but throttled to supply a total of 110,000 std.cu.ft./min. One supply blower will furnish the minimum safe air supply to the Canyon. Each of the Sample Gallery supply units is rated at 40,000 std.cu.ft./min. and has reheat coils in the individual supply ducts. Normally, one of these units is a 100 per cent standby for the other.

8.22 Service Blower Room

The Service Blower Room, located west of the Process Blower Room in the west service annex, contains two air supply units that discharge to a common duct and supply most of the service portion of the building (excluding the Laboratory). Each unit consists of louvers, a preheater, a washer, and a blower. The reheat coils are in the individual supply ducts to the various zones. Each unit has a capacity of 70,000 std. cu.ft./min. which is approximately 50 per cent of the required capacity for the system; therefore, the units can act only as partial standbys for each other.

8.23 Laboratory ventilation

The ventilation equipment for the Laboratory is located in the equipment room on the second floor of the Laboratory. The main air supply of approximately 30,000 std.cu.ft./min. is furnished by one of two parallel units consisting of louvers, preheat coils, air washers, and blowers. Reheat coils are located in the ducts going to various zones. Normally, one of the two parallel units is a standby for the other. A special ventilation system with refrigeration-type air conditioning supplies air of constant humidity to the counting and instrument rooms of the Laboratory.

The Laboratory ventilation system is designed to maintain the direction of air flow from the "cold" areas to the "hot" areas within the Laboratory.

Air exhausted from the Laboratory hoods is drawn through fireproof CWS-type filters by an exhaust fan. A second fan in parallel with the first is on standby. These exhaust fans are powered by the emergency circuit. Air from the dressing room area is exhausted directly to outside without filtering.

8.24 Special exhaust systems

An exhaust unit at each end of the Sample Gallery withdraws the air from the sample hoods. These units exhaust through CWS-type filters to the atmosphere. These units are also switched to the emergency power circuit in case of power failure.

The main portion of the Sample Gallery, Canyon Lobby, 276-A Building, Regulated Shop, and the Acid Storage Vault are exhausted by two units, one at each end of the gallery. These units exhaust to a local stack and have no filters in the system.

The PR Room air is exhausted by a single blower through a fire-proof CWS-type filter. This blower is switched automatically to the emergency power circuit in case of power failure.

C. OUTSIDE FACILITIES

1. Air Filter and Stack, 291-A

The function of the 291-A Facility is to dispose of ventilation air and gaseous wastes from the Purex process without creating conditions which are biologically hazardous. The equipment includes the Ventilation Air Filter, Fan Platform, Stack Sample House, and the stack.

1.1 Ventilation Air Filter(6)

The Ventilation Air Filter (Figure XI-16), located northwest of the Stack, is designed to remove 99.9 per cent of the radioactive particles from the exhaust ventilation air before the air is discharged to the atmosphere.

The filter consists of two fibrous glass beds, the pre-filter and the clean-up filter. The over-all dimensions of the filter are 82 ft. long by 52 ft. wide by 13 ft. high. The air exhaust tunnel enters the intake duct of the filter along one end of the pre-filter bed. The air flows to the top of the pre-filter section then down through the bed, then across beneath the filter bed to the clean-up filter, and then up through the clean-up filter bed to the exhaust duct.

The pre-filter contains a 7-ft.-deep bed of "free packed" 115K Fiberglas.* The desired density gradient is achieved by the weight of the medium itself and its progressive compression down through the bed. The filter medium is contained by upper and lower stainless-steel screens.

The clean-up filter consists of 132 American Air Filter Deep Bed Filter Units packed with one-half inch of AA Fiberglas* at 1.2-lb./cu.ft. density and one-half inch of B Fiberglas* at 1.4-lb./cu.ft. density. These units consist of five wedge-shaped pockets supported in a grid-type frame. The two flat sides of each pocket provide a one-inch deep filtering surface through which the air passes. The total area per unit is approximately 50 sq.ft.

The design pressure drop for the filter is 4 inches of water at superficial air velocities of 50 ft./min. in the pre-filter and 20 ft./min. in the clean-up filter. Included in the design is a by-pass channel and a plug for directing flow to a future filter installation.

---

*) Nomenclature employed by Owens-Corning Fiberglas Corporation.

The Fiberglas filter media are resistant to water and dilute nitric acid. It is undesirable, however, to have large quantities of water reach the clean-up filter since the finer medium is highly impervious to water and a substantial temporary pressure drop increase would probably result across the filter if wetting occurred. The pre-filter section is designed to provide insurance against water carry-over to the clean-up filter. A humidity analyzer is installed in the ventilation duct before the air enters the filter so much of the condensation can be avoided by adjusting humidity on the air entering the Canyon.

1.2 Fan Platform

Four parallel exhaust fans (three electrical and one steam-turbine driven) for the 202-A Process Ventilation System are mounted on a concrete platform near the base of the stack. Normally, the exhaust load is carried by the three electrically driven blowers, each rated at 42,000 std.cu.ft./min. at a static pressure of minus 15 inches of water.

If any one or all of the electrical units fail, or if the pressure in the air duct rises to a predetermined level, the steam-turbine blower will automatically start. This turbine blower is rated at 63,000 std.cu.ft./min. at a static pressure of minus 9 inches of water.

The controls for the blowers are enclosed in a small house on the platform.

1.3 Process Stack

Located immediately south of the southeast corner of the 202-A Building is the Process Stack which is constructed of reinforced concrete and rises to 200 feet above grade. The exhaust air rises through a free-standing, seven-foot inside diameter, stainless-steel liner. The top of the stack is capped to cover the annulus between the stack and the liner. The bottom of the liner has a dished head which drains to a collection tank. The inlet breeching for the ventilation air is baffled and is welded to the liner at an angle of 45° upward.

Six 8-inch nozzles enter the liner below the ventilation air breeching. Three are for routing the Dissolver off-gas to the stack while the other three are spares.

Stack gas sampling points are located near the top and bottom of the stack. Lines from these points run to a sample house, located east of the stack, where the radiological sampling equipment is located.

A wash system, which includes a booster pump, is installed which permits flushing off the inside walls of the liner.

2. Chemical Storage Facilities

2.1 Chemical Tank Farm, 211-A

The Chemical Tank Farm, 211-A (Figure XI-3), is located north of the 202-A Building. The tanks, their use, capacities, and materials of construction are given in the table below.

Tank No.	Service	Capacity	Material of Construction
TK-10	60% HNO_3	4,300	Type 309 stainless steel
TK-11	60% HNO_3	100,000	Type 304L s.s.
TK-12	60% HNO_3	100,000	Type 304L s.s.
TK-20	50% NaOH	30,000	Carbon steel
TK-21	50% NaOH	30,000	Carbon steel
TK-30	Demineralized water	100,000	Aluminum
TK-40	Hydrocarbon diluent	65,000	Carbon steel
TK-41	TBP	30,000	Carbon steel
TK-50	H_2SO_4	750	Carbon steel

2.2 Sodium Nitrate Storage, 2714-A

A separate warehouse (2714-A) capable of storing 375,000 pounds of sodium nitrate is located north of the 202-A Building (Figure XI-3). This separate storage of sodium nitrate is resorted to as a fire precaution, as discussed in Chapter XXII.

3. Uranium Storage Tank Farm, 203-A

Four 100,000-gallon stainless-steel tanks (P-1, P-2, P-3, and P-4) and two 8,000-gallon stainless-steel tanks (TK-13 and 14) are located approximately 100 yards north of the 202-A Building.

The 100,000-gallon tanks are used for the storage of 60 per cent uranyl nitrate product solution (2EU). The large volume provided permits storage of the 2EU prior to shipment to the UO_3 Plant (224-U Building). This storage volume would be utilized in order to allow sufficient time for radioactive U-237 decay in the event that slugs "cooled" less than 90 days are processed.

The 8,000-gallon tanks provide storage for the nitric acid recovered from the UO_3 conversion facility.

The concrete tank pad along with a concrete dike surrounding each tank provides a basin sufficiently large to prevent spread of material and contamination in the event of a tank rupture.

There are two pump houses located outside the dike, one for transferring uranium solution to a tank trailer for shipment to 200-W Area and the other for furnishing the 224-U recovered acid to a second recovered acid header in the 202-A Building.

[redacted]

4. Underground Waste Storage Facility, 241-A[2]

The 241-A Tank Farm is located (as shown on Figure XI-2) in a northeast direction from the 202-A Building at a distance of approximately one quarter of a mile. The elevation of the farm is designed to permit gravity flow from the waste lines emerging from the 202-A Building to the farm.

The neutralized concentrated radioactive wastes are jetted from the 202-A Building to the Diversion Box, 241-A-151, located just south of the building. The waste then flows by gravity in a 5-line encasement to the Diversion Box, 241-A-152, located near the 241-A Facility. From this box the waste can be routed to any of the six underground tanks, TK-101 through 106. A simplified flow sketch is presented as Figure XI-18.

The reinforced-concrete underground storage tanks (Figure XI-19) are 75 ft. in diameter with a 3/8-inch mild-steel (SAE 1010) liner extending 32 ft. 4 in. above the bottom, giving a working volume of approximately 1,000,000 gallons. These tanks differ from previous waste storage tanks used at H.A.P.O. in the following manner:

(a) They are deeper, for greater capacity.
(b) A flat-bottom design was used with a "T" butt weld at the bottom of the liner rather than a dished bottom with a 4-ft. knuckle radius.
(c) Provisions were added to remove boilup vapors to an outside vapor collection header system.
(d) Tanks are arranged to be filled individually rather than by cascade as in previous tank farms.
(e) The waterproof membrane between the liner and the concrete has been eliminated.
(f) X-ray examination of the welds was made on a spot check basis only, instead of complete X-ray examination.

Vapors produced by heat evolution due to radioactive decay are vented through 20-inch lines to a central 24-inch vent header. The vapors are routed to an entrainment removal cyclone (T-401) and then to either of two contact condensers, E-411 and E-412. The entrained liquid collected in the entrainment removal cyclone is drained by gravity to TK-106. The vapors are condensed by utilizing the cooling water from the 202-A Building.[4] The condensate and the cooling water are routed to Cavern 216-A8 for disposal. A blower vents the condensers to a de-entrainment tower (T-433) and then to a local stack.

All the underground tanks have a thermowell with a 20°C. to 220°C. indicating thermometer. TK-101 has additional temperature monitors. Included are nine thermocouples on the floor of the tank and six thermocouples located in the soil at various levels and locations below the tank floor.[5]

5. Waste Caverns[8]

Low-activity liquid wastes are routed to rock caverns located in various locations around the 202-A Area, as shown in Figure XI-2.

"Cavern" is a new term introduced by Radiological Engineering to differentiate these underground seepage waste disposal facilities from the standard Hanford "crib" made by cross-stacking timbers to form an underground box.

The caverns consist of a network of perforated vitreous pipe laid on a 7-ft.-deep bed of 3-in. (or greater) rock. The pipe is covered with a 4-in. layer of 3/4-in. to 1-1/2 in. diameter gravel and 4 in. of 1/4-in. to 3/4-in. gravel, 2 in. of sand, 2 layers of Sisal-Kraft paper, another 2 in. of sand and an earth back-fill. The Sisal-Kraft paper is to prevent silt from seeping into and plugging the gravel bed. A typical cavern is shown in Figure XI-17.

Estimated percolation rate for these caverns is 200 gal./(day)(sq.ft. of cavern). The caverns and their locations, functions, and sizes are listed below.

Cavern No.	Function	Size, Ft.	Location
216-A1	Abandoned		
216-A2	Organic waste	20 x 20	South of 202-A
216-A3	Abandoned		
216-A4	Lab. and cell drain	20 x 20	South of 202-A
216-A5	Process condensate	35 x 35	South of 202-A
216-A6	Steam condensate	100 x 100	East of 202-A
216-A7	Diversion box drain	10 x 10	Near 241-A-152
216-A8	Tank farm condensate	80 x 80	East of 241-A
216-A9	203-A sump and Vacuum Fractionator condensate	30 x 200	North of 203-A

6. Cooling Water Disposal

The cooling water used for condensers and tanks in the 202-A Building is routed to an underground header located south of the building. The water flows to an underground basin east of the 202-A Building from where it is pumped to a 750,000-gallon storage tank (241-A-201). Any excess water runs to a headwall into the swamp.

The 241-A-201 Tank provides a 15-lb./sq.in.ga. head on the cooling water line to the Tank Farm condensers. The Tank Farm condensers discharge their cooling water and condensate to Cavern 216-A8, or it may be diverted to the swamp. Both lines to the swamp contain proportional samplers and scintillation counters for detection of any radioactive waste solution entrained in the condensates.

7. "Cold" Solvent Building, 276-A

Located at the extreme west end on the north side of the 202-A Building is the "Cold" Solvent Building 276-A. It has two functions. The main function is to house the equipment used for decontaminating the organic waste stream from the Final Uranium Cycle. A secondary function is to provide a means by which fresh hydrocarbon and tributyl phosphate may be brought into the process.

8. Acid Storage Vault

The Acid Storage Vault is located along the north wall of 202-A, just east of the Head-End Control Room. It is constructed with 1-ft. 6-in. reinforced concrete walls and is 98 ft. long, 20 ft. wide, and 35 ft. deep. Removable concrete cover blocks one foot above grade form the roof. It contains four large tanks: two for collecting and sampling low-activity laboratory waste, and two for storage of recovered nitric acid and its supply to the Recovered Nitric Acid Header in the Sample Gallery. The tanks are fitted for contact maintenance. Personnel access to the vault is from the Sample Gallery through an electrically operated door and an air lock.

9. Vacuum Fractionator Building(7)

At the time of this writing, design and construction of the Vacuum Nitric Acid Fractionator and the building housing it with its auxiliaries was not complete. However, preliminary designs had been prepared. On the basis of this design, the Vacuum Fractionator Building is located at the northwest corner of the Acid Storage Vault. It is constructed of reinforced concrete with 1-ft.-thick walls. The building proper is above grade with a pit for the tail-water tank extending 10 ft. below grade. The over-all outside dimensions of the building are 28 ft. by 35 ft., and it is 45 ft. 6 in. above grade at the highest point. Equipment may be removed through removable 8-in.-thick cover blocks on the roof. Personnel access to the building is by two doors on the east wall opening to the outside at grade level.

10. Equipment Disposal Facility(3)

In other separations plants contaminated equipment which has failed is crated and hauled from the plant on flatcars to the burial ground. Owing to the size of some of the Purex equipment pieces, particularly the large concentrators, this method of equipment disposal becomes more difficult and costly. In order to minimize the difficulties, costs, and potential hazards encountered in handling large radioactive equipment pieces on the railroad right-of-way, a new facility has been added to the south end of the Railroad Tunnel. It consists of a 500-ft.-long extension of the tunnel into which failed equipment can be pushed on expendable flatcars. At the extension entrance is a "Y" for future addition of another disposal facility. A water-filled door will shield this area from the tunnel during routine operation.

D. MASTER DRAWING LIST

The Master Drawing List (Tables XI-1 to XI-3) provides a list of some of the more useful drawings from which details about the Purex Plant can be obtained.

1. Process Flow Diagrams

Process Flow Diagrams (listed in Table XI-1) are the basic engineering scope material from which equipment sizes and layout of equipment are decided. They show a schematic flow picture of the process, tankage required, equipment heat-transfer duty, control functions, flow rates, stream compositions, and material balances.

2. Engineering Flow Diagrams

Engineering Flow Diagrams (Table XI-1) are the first step in the detail design of the plant. They show equipment arrangement, line numbers, tank sizes, layout of remote connectors, ratings of pump and jets, pipe sizes, instrument designations, spare routings and, in general, all information required for going on with detail design.

3. Instrument Engineering Flow Diagrams

Instrument Engineering Flow Diagrams (Table XI-1) show a schematic arrangement of process equipment with special attention called to instrument function. Detail information as to size and range is given for each valve, rotameter, orifice plate, recorder, alarm, and other instrument components.

4. Piping -- Cell Arrangement and Wall Pattern -- Plan and Elevation

This group of drawings (Table XI-2) shows exact elevations and layout of vessel nozzles and wall nozzles by means of elevation and plan views of the cells.

5. Class I Equipment As-Built Drawings

This group of drawings (Table XI-2) will contain "as-built" location dimensions of all Class I vessels in their respective cells. These drawings will be useful in designing new jumpers for additions after the plant is operating.

6. Miscellaneous Drawings

This list (Table XI-2) includes drawings of general interest listed in drawing-number order. Of special interest are the flow diagrams of individual service headers and key drawings which show the numbers of detail drawings for small sections of the building.

7. Blueprint File Table

The Blueprint File (BPF) is the group of vendor drawings furnished with each piece of equipment. Its contents are indicated in Table XI-3. For specific questions about a piece of equipment, this is the best source of information.

REFERENCES

(1) Purex Facility -- Independent Vessel Vent Systems for 276-A and Acid Storage. Laboratory Waste Vaults -- Revision Request No. 53. C. A. Rohrmann, H.A.P.O. 3/1/54.

(2) Purex Facility -- Design Changes for 241-A Waste Farm -- Revision Request No. 55. C. A. Rohrmann, H.A.P.O. 4/14/54.

(3) Purex Facility -- Disposal Facilities for Failed Purex Equipment -- Revision Request No. 59. J. B. Fecht, H.A.P.O. 1/17/55.

(4) Reference drawings on Figures XI-1 through XI-19.

(5) H-2-55922 Instruments -- Underground Tank Temperature Monitoring System.

(6) HW-30142 Comparative Study of Alternative Fibrous Glass and Sand Exhaust Ventilation Air Filter Installations for Purex. L. L. Zahn. 12/14/53.

(7) HW-31334 Purex Low Pressure Nitric Acid Fractionator. E. Doud and D. J. Stoker. 3/24/54.

(8) HW-33305 Tabulation of Radioactive Liquid Waste Disposal Facilities. H. V. Clukey. 10/8/54.

LIST OF TABLES AND FIGURES

TABLE XI-1	MASTER DRAWING LIST--PART I: FLOW DIAGRAMS
TABLE XI-2	MASTER DRAWING LIST--PART II: EQUIPMENT, PIPING, AND MISCELLANEOUS
TABLE XI-3	MASTER DRAWING LIST--PART III: BLUEPRINT FILE
FIGURE XI-1	SITE MAP--HANFORD ATOMIC PRODUCTS OPERATION
FIGURE XI-2	200-E AREA PLOT PLAN
FIGURE XI-3	PUREX AREA PLOT PLAN
FIGURE XI-4	PHOTOGRAPH OF PUREX-PLANT MODEL
FIGURE XI-5	202-A BUILDING--PLAN VIEWS: UPPER LEVELS
FIGURE XI-6	202-A BUILDING--PLAN VIEWS: LOWER LEVELS
FIGURE XI-7	202-A BUILDING--LONGITUDINAL SECTIONS
FIGURE XI-8	202-A BUILDING--TYPICAL TRANSVERSE SECTION
FIGURE XI-9	PERSPECTIVE CUTAWAY OF PUREX CELL AREA
FIGURE XI-10	SIMPLIFIED FLOW SKETCH--MAIN "HOT" PROCESS STREAMS
FIGURE XI-11	SIMPLIFIED FLOW SKETCH--MAIN "COLD" AND REWORK STREAMS
FIGURE XI-12	SIMPLIFIED FLOW SKETCH--MISCELLANEOUS PROCESS STREAMS
FIGURE XI-13	PR ROOM
FIGURE XI-14	202-A BUILDING--LABORATORY WORKING AREA
FIGURE XI-15	202-A BUILDING--VENTILATION FLOW DIAGRAM AND PRESSURE MAP
FIGURE XI-16	CUTAWAY OF VENTILATION AIR FILTER
FIGURE XI-17	TYPICAL ROCK CAVERN
FIGURE XI-18	SIMPLIFIED FLOW SKETCH--241-A WASTE FACILITY
FIGURE XI-19	UNDERGROUND WASTE STORAGE TANK

TABLE XI-1

MASTER DRAWING LIST, PART I: FLOW DIAGRAMS

PROCESS FLOW DIAGRAMS

Title	Sheet No.	Drawing No.
Aqueous Make-Up	1	H-2-54130
	2	H-2-54131
Metal Solution Feed Preparation	1	H-2-54132
	2	H-2-54133
Precycle Decontamination		H-2-54134
Partition Cycle Decontamination		H-2-54135
Uranium Cycle Decontamination	1	H-2-54136
	2	H-2-54137
Second Cycle Pu Decontamination		H-2-54138
Waste Section		H-2-54139
Solvent Treatment Cycle No. 1		H-2-54140
Solvent Treatment Cycle No. 1 - Alternate		H-2-54141
Solvent Treatment Cycle No. 2		H-2-54142
Solvent Treatment Cycle No. 2 - Alternate		H-2-54143
Process Vent System, Laboratory Waste Treatment, and Decontamination Tanks		H-2-54144
Chemical Tank Farm		H-2-54806
Waste Disposal Design Criteria, Flow Diag.		SK-2-1598

ENGINEERING FLOW DIAGRAMS

Title	Sheet No.	Drawing No.
Metal Solution Preparation	1	H-2-54145
	↓	↓
	5	H-2-54149
Process Vent System		H-2-54150
Waste Treatment	1	H-2-54151
	↓	↓
	5	H-2-54155
Solvent Treatment Cycle No. 1	1	H-2-54156
	2	H-2-54157
	3	H-2-54158
Precycle	1	H-2-54159
	2	H-2-54160
Partition Cycle	1	H-2-54161
	2	H-2-54162
	3	H-2-54163
Uranium Decontamination Cycle	1	H-2-54164
	2	H-2-54165
	3	H-2-54166
Plutonium Decontamination Cycle	1	H-2-54167
	2	H-2-54168
	3	H-2-54169
Solvent Treatment Cycle No. 2	1	H-2-54170
	2	H-2-54171
	3	H-2-54172
Decontamination Cell and Hot Shop		H-2-54173
Recovered Acid Storage		H-2-54174
Laboratory Waste Treatment		H-2-54175
Aqueous Make-Up	1	H-2-54177
	↓	↓
	6	H-2-54182
Header Piping	1	H-2-54183
	↓	↓
	4	H-2-54186
Chemical Tank Farm - 211-A Bldg.	1	H-2-54803
	2	H-2-54804
UNH Storage Facility - 203-A Bldg.		H-2-54805

INSTRUMENT ENGINEERING FLOW DIAGRAMS

Title	Sheet No.	Drawing No.
Metal Solution Feed Preparation	1	H-2-55151
	↓	↓
	8	H-2-55158
Pre-cycle	1	H-2-55159
	2	H-2-55160
	3	H-2-55161
	4	H-2-55162
Aqueous Make-Up	1	H-2-55163
	↓	↓
	5	H-2-55167
Partition Cycle	1	H-2-55168
	↓	↓
	4	H-2-55171
Product Decontamination Cycle	1	H-2-55172
	2	H-2-55173
	3	H-2-55174
By-Product Decontamination Cycle	1	H-2-55175
	↓	↓
	4	H-2-55178
Solvent Treatment Cycle No. 1	1	H-2-55179
	↓	↓
	4	H-2-55182
Waste Treatment	1	H-2-55183
	↓	↓
	8	H-2-55190
Solvent Treatment Cycle No. 2	1	H-2-55191
	↓	↓
	5	H-2-55195
Process Vent System		H-2-55196
Laboratory Waste Treatment		H-2-55197
Decontamination Cell and Hot Shop		H-2-55198
Recovered Acid Storage		H-2-55199
Header and Service Facilities		H-2-55200
UNH Storage Facility		H-2-54336
Chemical Tank Farm		H-2-54337
Outside Cooling Water and Steam		H-2-54338
Condensate Headers, Catch Tank, 216A-TK-2, Flash Tanks TK-618-1 and TK-618-2		

TABLE XI-2

MASTER DRAWING LIST, PART II: EQUIPMENT, PIPING, AND MISCELLANEOUS

CLASS I EQUIPMENT AS BUILT DRAWINGS

Title	Drawing No.
Standard 10' 0" x 9' 3" Tank	H-2-52521
Standard 7' 0" x 6' 9" Tank	H-2-52522
10' 0"x 8' 6" Tank TK-G1	H-2-52523
10' 6" x 16' 0" x 14' 0" Tank TK-G5, G7	H-2-52524
8' 0" x 12' 4" Tank TK-A3, B3, C3	H-2-52525
9' 0" x 6' 0" Filter F-A1, B1, C1	H-2-52526
Filter F-F1 and Condenser E-F1	H-2-52527
4' 0" x 5' 10" Tanks TK-G6, F14	H-2-52528
2' 6" x 6' 7" Tank TK-J5	H-2-52529
Reactor T-A2, B2, C2, F2; Heater E-A2, B2, C2, F2	H-2-52530
Tower T-A3-1, B3-1, C3-1; Knock-Out Pot T-A3-2, B3-2, C3-2	H-2-52531
Dimension Table E-F6, F11-1, H4-1, J8-1, K4-1, F11-2, H4-2, J8-2, K4-2, SP-F6, F11, H4, J8, K4	H-2-52532
Dimension Table TK-F10, F12, F13, F15, F16, F18, G8, H1, J1, J3, K1, K5, K6	H-2-52534
Tower T-F5, Condenser E-F5, Seal Pot SP-F5	H-2-52535
Concentrator Cell	H-2-52536
Conc. E-F6, F11-1, H4-1, J8-1, K4-1	H-2-52537
Cond. F11-2, H4-2, J8-2, K4-2 Elev. Seal Pot SP-F6, F11, H4, J8, K4	
Condenser EF-9	H-2-52538
Concentrator E-L4, L7	H-2-52539
Tank TK-L6	H-2-52540
Seal Pot SP-F5, F6, F11	H-2-52541
Tower T-G2	H-2-52542
Tower T-F5, Cond. E-F3, Seal Pot SP-F5	H-2-52543
Tower T-L1	H-2-52544
Tower T-H2, J2, K2	H-2-52545
Tower T-J4	H-2-52546
Tower T-H3, J7, K3, Sampler Pot SPLP-H3, J7, K3	H-2-52547
Tower T-I2	H-2-52548
Liquid-Liquid Centrifuges G-G3, G4, H3, H4	H-2-53180
Solids-Liquid Centrifuges G-E2, E4	H-2-53179
Large Pulse Generators PG-G2, H2, J2, J6, J7, K2, K3, R2, H3	H-2-53178
Small Pulse Generators PG-J4, L1, L2	H-2-53177

PIPING - CELL ARRANGEMENT AND WALL PATTERN
PLAN AND ELEVATION

Title	Drawing No.
Gallery Side - Cell A	H-2-54100
Trench Side - Cell A	H-2-54101
Gallery Side - Cell B	H-2-54102
Trench Side - Cell B	H-2-54103
Gallery Side - Cell C	H-2-54104
Trench Side - Cell C	H-2-54105
Gallery Side - Cell D	H-2-54106
Trench Side - Cell D	H-2-54107
Gallery Side - Cell E	H-2-54108
Trench Side - Cell E	H-2-54109
Gallery Side - Cell F - Sheet No. 1	H-2-54110
Gallery Side - Cell F - Sheet No. 2	H-2-54111
Gallery Side - Cell F - Sheet No. 3	H-2-54112
Trench Side - Cell F - Sheet No. 1	H-2-54113
Trench Side - Cell F - Sheet No. 2	H-2-54114
Trench Side - Cell F - Sheet No. 3	H-2-54115
Gallery Side - Cell G	H-2-54116
Trench Side - Cell G	H-2-54117
Gallery Side - Cell H	H-2-54118
Trench Side - Cell H	H-2-54119
Gallery Side - Cell G	H-2-54120
Trench Side - Cell G	H-2-54121
Gallery Side - Cell K	H-2-54122
Trench Side - Cell K	H-2-54123
Gallery Side - Cell L	H-2-54124
Trench Side - Cell L	H-3-54125
Cell M	H-2-54225

MISCELLANEOUS DRAWINGS

Title	Drawing No.
Architectural-Finish Schedule	H-2-52039
	H-2-52040
	H-2-52041
Structural - Construction Key	H-2-52251
	H-2-52252
	H-2-52253
Piping - Key Construction Index	H-2-53167
- Hot Pipe Trench Schematic	H-2-53168
Eng. Flow Diagram	
Steam Headers - Sheet 1	H-2-53187
Wash Down System	H-2-54188
Fire Fog System	H-2-54189
Steam Header - Sheet 2	H-2-54190
Raw Water Header - Sheet 1	H-2-54191
Sanitary Water Header	H-2-54192
Inst. and Plant Air Hdrs. - Sheet 1	H-2-54193
Inst. and Plant Air Hdrs. - Sheet 2	H-2-54194
Compressor Room	H-2-54195
Jet Gang Valve Hdr.	H-2-54196
Analytical Laboratory Services	H-2-54197
Inst. Air and Vacuum Systems	
Analytical Laboratory Services	H-2-54198
Methane and Acid	
Vacuum Sampling System	
Gallery Process Hdr. - Sheet 1	H-2-54218
- Sheet 2	H-2-54219
- Sheet 3	H-2-54220
- Sheet 4	H-2-54221
Eng. Flow Diagram	
Fire Fog System - Sheet 1	H-2-54222
Condensate System	H-2-54224
Analytical Laboratory Services	H-2-54231
Propane and Oxygen	
Analytical Lab. Services	H-2-54232
Distilled Water and Sanitary Water	
Canyon Deck Vacuum Cleaning System	H-2-54233
Cold Process Hdrs. - Aqueous Make-Up	H-2-54234
Electrical	
One Line Diagram - Sheet 1	H-2-54350
- Sheet 2	H-2-54351
- Sheet 3	H-2-54352
Cathodic Protection, Plot Plan, Section	H-2-55072
Eng. Flow Diagram	
Outside Utility Lines	H-2-55084
Outside Waste Lines - Sheet 1	H-2-55086
Outside Chemical Sewer	H-2-55087
Outside Waste Lines - Sheet 2	H-2-55088
Piping - Key Plan Outside Facilities	H-2-55130
Instruments	
Waste Storage - Inst. Eng. Flow Diagram	H-2-55907
Underground Tk. Temperature Monitoring	H-2-55922

TABLE XI-3

MASTER DRAWING LIST, PART III: BLUEPRINT FILE

Equipment	Equipment Piece Number of Interchangeable Equipment	Nominal Dimensions	Design Drawing Number	BPF No.
202-A Building (Canyon)				
Off Gas Filter	F-A1, B1, C1, F1	9 ft. O.D. x 6 ft. high	H-2-52463	8488
Silver Reactor	T-A2, B2, C2, F2	4 ft. 6 in. x 10 ft. 6 in.	H-2-52467	7988
Reactor Heater	E-A2, B2, C2, F2	2 ft. 8 in. x 8 ft.	H-2-52473	7988
Dissolver Tower	T-A3-1, B3-1, C3-1	4 ft. 3 in. x 18 ft.	H-2-52468	8286
Knock-Out Pot	T-A3-2, B3-2, C3-2	4 ft. x 4 ft. 6 in.	H-2-52469	8286
Dissolver	TK-A3, B3, C3	8 ft. x 12 ft. 4 in.	H-2-52462	8023
Std. 5000 gal. Tank	TK-D1, D2, D3, D4, D5, E3, E5, E6, F3, F4, F7, F8, F10, F12, F13, F15, F16, F18, G8, H1, J1, J3, K1, K5, K6	10 ft. x 9 ft. 3 in.	H-2-52453	8024
Std. 1700 gal. Tank	TK-E1, G2	7 ft. x 6 ft. 9 in.	H-2-52454	8024
Head-End Centrifuge	C-E2, E4			8406
Fractionator or Absorber	T-F5	10 ft. x 26 ft. 1 in.	H-2-52487	8158
Std. Large Concentrator	E-F6, F11-1, H4-1, J8-1, K4-1	9 ft. x 27 ft. 11 in.	H-2-52477 H-2-52478 H-2-52513	8158
Std. Large Condenser	E-F1, F5, F11-2, H4-2, J8-2, K4-2	3 ft. x 9 ft.	H-2-52480	8158
Reflux Condenser	E-F9	1 ft. 6 in. x 9 ft.	H-2-52481	8171
Decanter	TK-F14, G6	4 ft. x 5 ft. 10 in.	H-2-52471	7829
IOF Tank	TK-G1	10 ft. x 9 ft. 3 in.	H-2-52456	8024
Pulse Generator	P0-G2, H2, H3, J2, J3, J6, J7, K2, K3	21.2 in. bore		7335
IO Column	T-G2	2 ft. 10 in. x 33 ft.	H-2-52489	8405
Organic Centrifuge	C-G3, G4			8406
Organic Storage Tank	TK-G5, G7	10 ft. 6 in. x 16 ft. x 14 ft.	H-2-52457	8170
"A" Type Column	T-H2, J2, K2	2 ft. x 33 ft.	H-2-52474	8405
"C" Type Column	T-H3, J7, K3	2 ft. 10 in. x 27 ft.	H-2-52501	8405
IBX Column	T-J6	2 ft. 3 in. x 33 ft.	H-2-52497	8111
IBS Column	T-J4	8 in. x 17 ft.	H-2-52499	8405
Pulse Generator	P0-J4, L1, L2	7.5 in. bore		7335
2AF Tank	TK-J5	2 ft. 6 in. x 6 ft. 7 in.	H-2-52466	7829
2A Column	T-L1	7 in. x 40 ft.	H-2-52507	8405
2B Column	T-L2	7 in. x 30 ft.	H-2-52509	8405
Product Stripper	T-L3	7 in. x 28 ft.	H-2-52493	7936
Product Concentrator	E-L4, L7	7 in. x 23 ft. 6 in.	H-2-52482	7936
Small Condensers	E-L5, L8, L12	6 5/8 in. x 6 ft. 3 in.	H-2-52483	7936
Product Rec. Tank	TK-L6	5 5/8 in. x 7 ft.	H-2-52485	7936
Product Sample Tank	TK-L9, L10	5 5/8 in. x 15 ft. 2 in.	H-2-52475	8098
Product Vacuum Tank	TK-L11	5 5/8 in. x 13 ft.	H-2-52504	7739
Decontamination Tank	TK-M1	7 ft. x 14 ft.	H-2-52511	8332
Hot Stop Tank	TK-M2	5 ft. x 12 ft. 6 in.	H-2-52512	7910
202-A Building (Aqueous Make-Up)	TK-101	5 ft. x 5 ft.		7703
	TK-103	5 ft. x 5 ft.		7703
	TK-104	8 ft. x 8 ft.		7429
	TK-105	8 ft. x 8 ft.		7703
	TK-106	5 ft. x 5 ft.		7429
	TK-107	8 ft. x 8 ft.		7429
	TK-211, 213, 212, 214	5 ft. x 5 ft.		7703
	TK-217, 218, 219	2 ft. x 4 ft.		7703
	TK-215	2 ft. x 2 ft. 6 in.		7703
	TK-216	2 ft. x 4 ft.		7703
See tabulation at right for new vs. old tank numbers.	TK-209, 210 (TK-R1-A)	8 ft. x 8 ft.		7703
	TK-201, 202, 220, 221	5 ft. x 5 ft.		7703
	TK-204, 205	5 ft. x 5 ft.		7703
	TK-206	5 ft. x 5 ft.		7703
	TK-222	5 ft. x 5 ft.		7703
	TK-207, 208, 324	8 ft. x 8 ft.		7703
	TK-223	8 ft. x 12 ft.		7933

Equipment	Equipment Piece Number of Interchangeable Equipment	Nominal Dimensions	BPF No.
202-A Building (Pipe and Operating Gallery)	TK-A3-A, B3-A, C3-A	7 ft. 6 in. x 9 ft.	7704
	TK-E2-A, G3-A, R3-A	2 ft. x 4 ft.	7703
	TK-G5-A	8 ft. x 8 ft.	7703
	TK-L9-A	12 3/4 in. x 4 ft.	7703
	TK-R1-A, R5-A, (TK-210, TK-209)	8 ft. x 8 ft.	7703
	TK-M1-A	5 ft. x 5 ft.	7703
276-A Building			
20F Tank	TK-R1	10 ft. x 9 ft. 3 in.	8387
20 Column	T-R2	2 ft. 10 in. x 33 ft.	8403
20W Tank	TK-R2	7 ft. x 6 ft. 9 in.	8151
Organic Centrifuge	C-R3, R4		8406
Organic Storage Tanks	TK-R5, R7 (TK-U3, TK-U4)	10 ft. x 14 ft.	7703
Decanter	TK-R6	4 ft. x 5 ft. 10 in.	7847
Wash Collection Tank	TK-R8	10 ft. x 9 ft. 3 in.	8151
Recovered Acid Facility			
Acid Storage	TK-U1, U2	10 ft. 6 in. x 16 ft. x 14 ft.	8151
Lab Crib Waste Rec.	TK-U3, U4 (TK-R5, TK-R7)	10 ft. x 14 ft.	7703
30% HNO_3 Feed Tank	TK-U5	Not Designed or Ordered Yet	
Fractionator	T-U6		
Barometric Condenser	E-U6-1		
Purge Tank	TK-U7		
Tail Water Tank	TK-U8		
Head Tank	TK-U9		
203-A and 211-A Facilities			
UNH Storage Tank	TK-P1, P2, P3, P4	25 ft. x 30 ft.	8422
HNO_3 Sampler Tank	TK-10	9 ft. x 9 ft.	
HNO_3 Storage Tank	TK-11, 12	25 ft. x 30 ft.	8422
Recovered HNO_3 Tank	TK-13, 14	10 ft. x 14 ft.	72819
NaOH Storage Tank	TK-20, 21	15 ft. x 24 ft.	8422
Demin. Water Tank	TK-30	25 ft. x 30 ft.	8422
Hydrocarbon Tank	TK-40	22 ft. x 24 ft.	8422
TBP Storage Tank	TK-41	15 ft. x 24 ft.	8422
H_2SO_4 Storage Tank	TK-50	5 ft. x 5 ft.	7807
Canyon Pumps	See Chapter XIV for details.		7932
Canyon Agitators			8097
Non-Canyon Agitators			7515
Canyon Transfer Jets			7920
Sampler Jets			7924
Vent Jets (Canyon)			8190

New Vs. Old Tank Numbers for Aqueous Make-Up Facility

New	Old	New	Old	New	Old	New	Old	New	Old
TK-201	TK-311	TK-206	TK-318	TK-211	TK-301	TK-216	TK-305	TK-221	TK-319
TK-202	TK-312	TK-207	TK-321	TK-212	TK-307	TK-217	TK-302	TK-222	TK-320
TK-203	TK-313	TK-208	TK-322	TK-213	TK-303	TK-218	TK-310	TK-223	TK-323
TK-204	TK-317	TK-209	TK-309	TK-214	TK-308	TK-219	TK-314		
TK-205	TK-316	TK-210	TK-306	TK-215	TK-304	TK-220	TK-315		

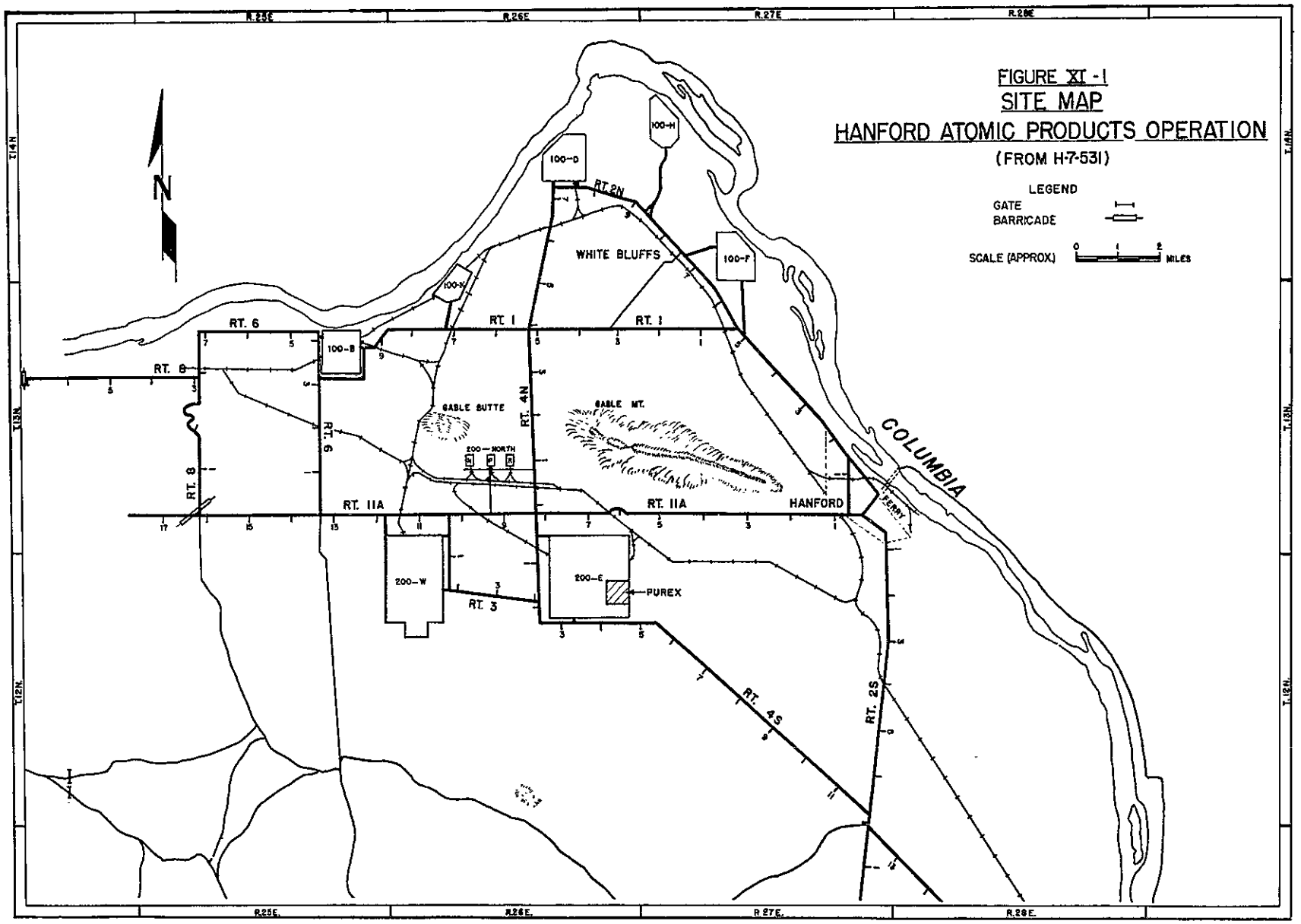
FIGURE XI - 1
SITE MAP
HANFORD ATOMIC PRODUCTS OPERATION
(FROM H-7-531)
LEGEND
GATE
BARRICADE
SCALE (APPROX.)
MILES
N
R.25E.
R.26E.
R.27E.
R.28E.
T.14N.
T.13N.
T.12N.
100-H
100-D
RT. 2N
WHITE BLUFFS
100-F
100-K
RT. 6
RT. 1
RT. 1
100-B
RT. 8
GABLE BUTTE
GABLE MT.
RT. 4N
RT. 9
200-NORTH
RT. 8
RT. 11A
RT. 11A
HANFORD
COLUMBIA
FERRY
200-W
200-E
PUREX
RT. 3
RT. 4S
RT. 2S

HW-31000

[redacted]

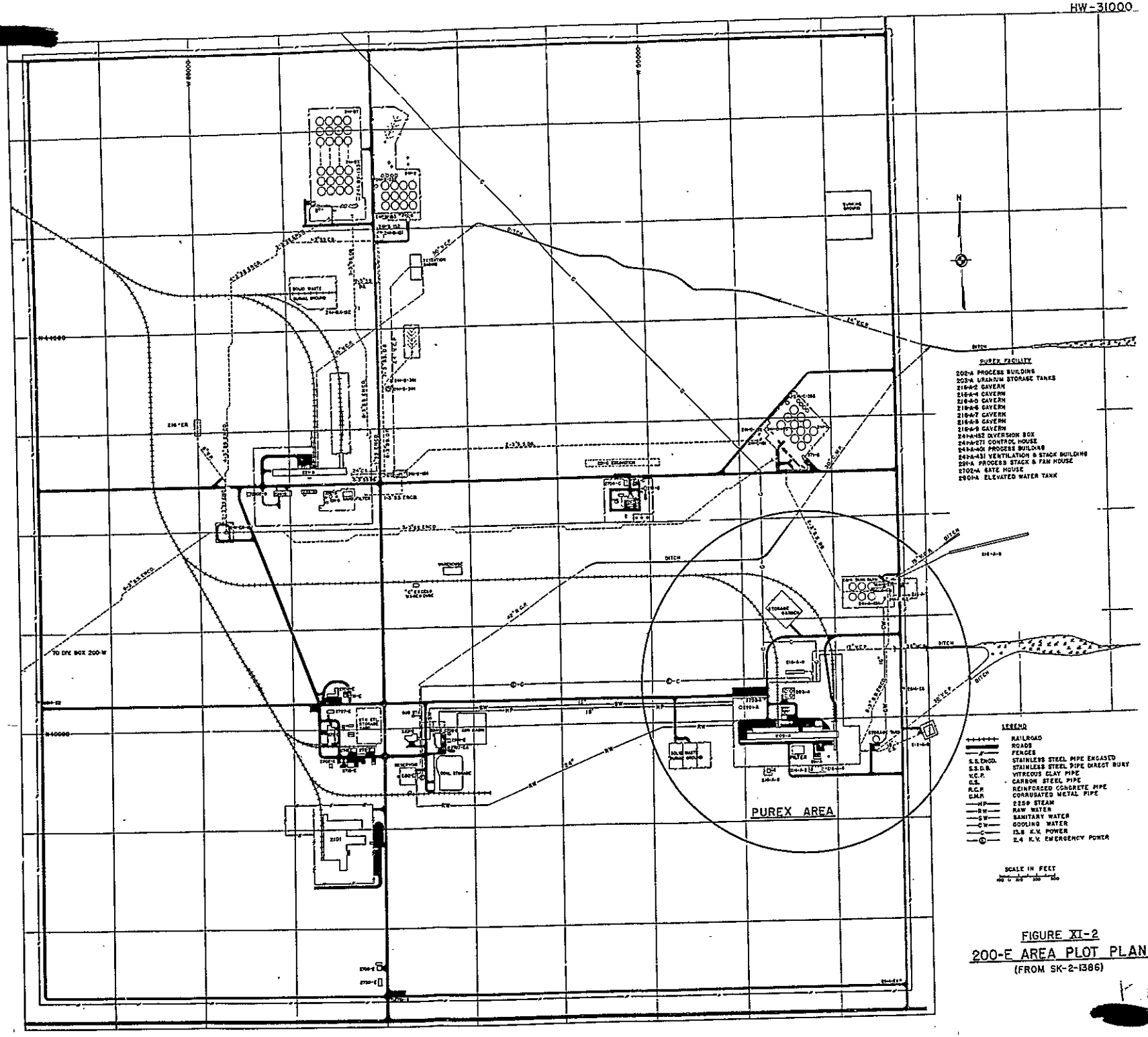

FIGURE XI-2

200-E AREA PLOT PLAN

(FROM SK-2-1386)

[redacted]

[redacted]

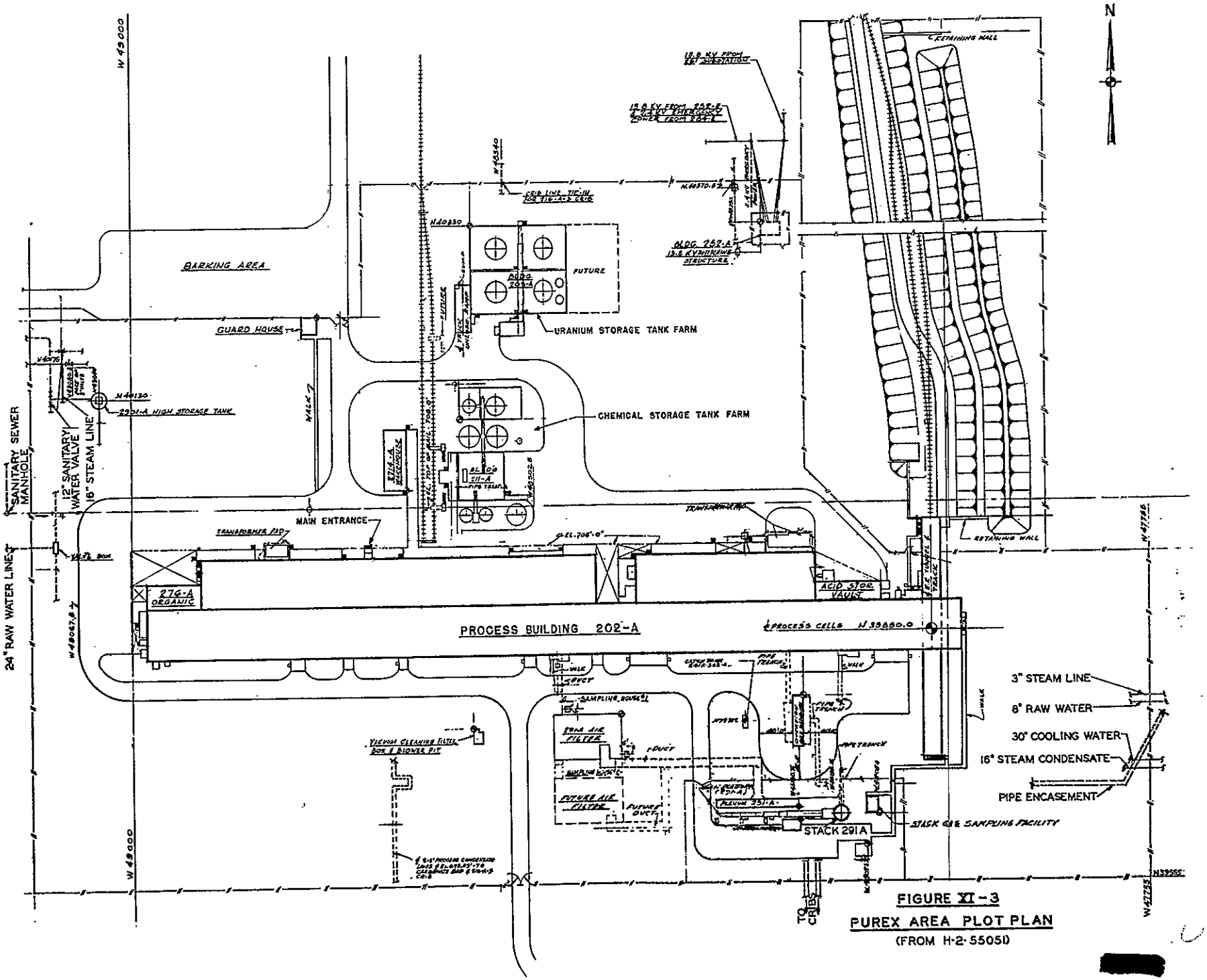

FIGURE XI-3

PUREX AREA PLOT PLAN

(FROM H-2-55051)

[redacted]

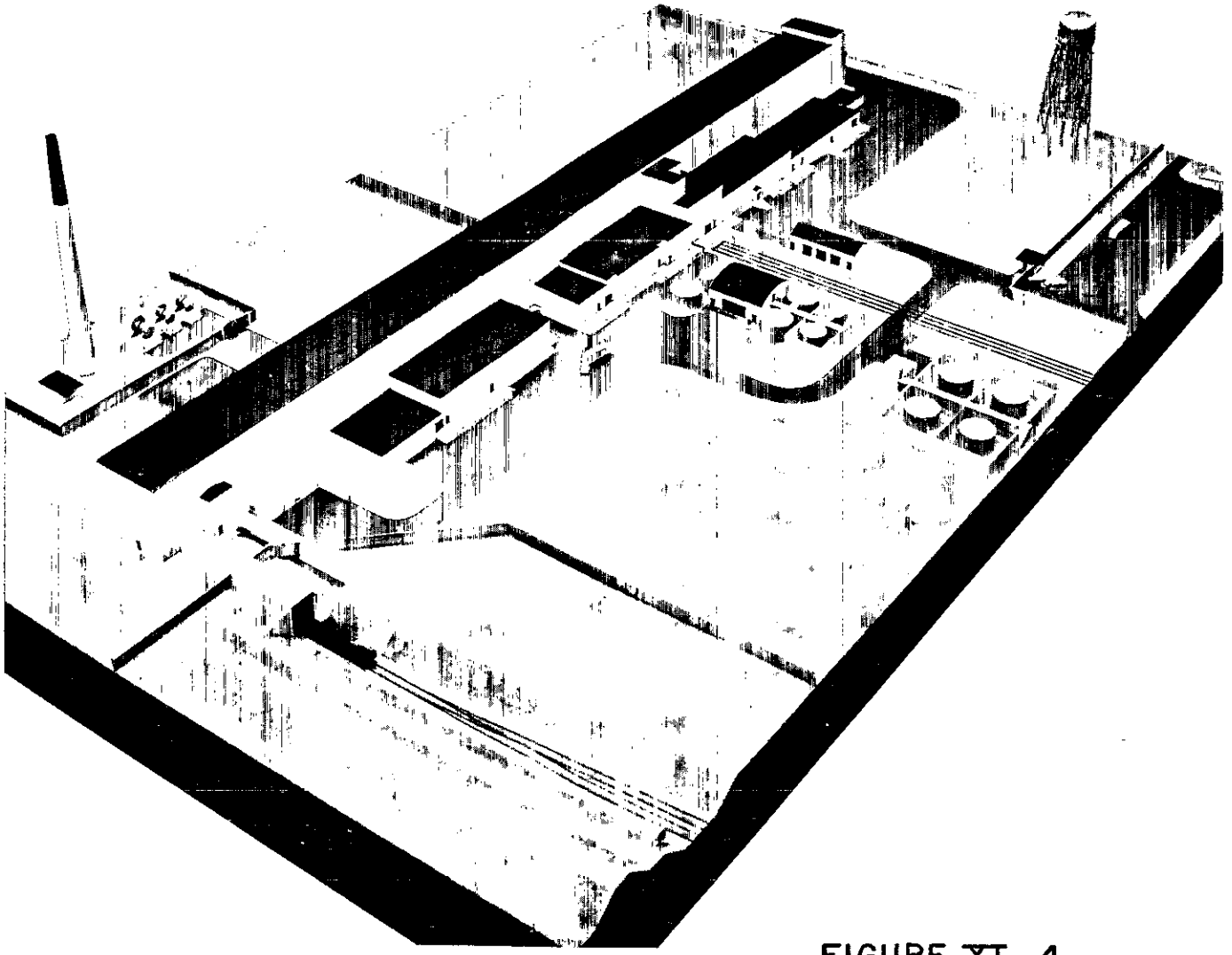

FIGURE XI-4

PHOTOGRAPH OF PUREX PLANT MODEL

AEC-GE RICHLAND WASH.

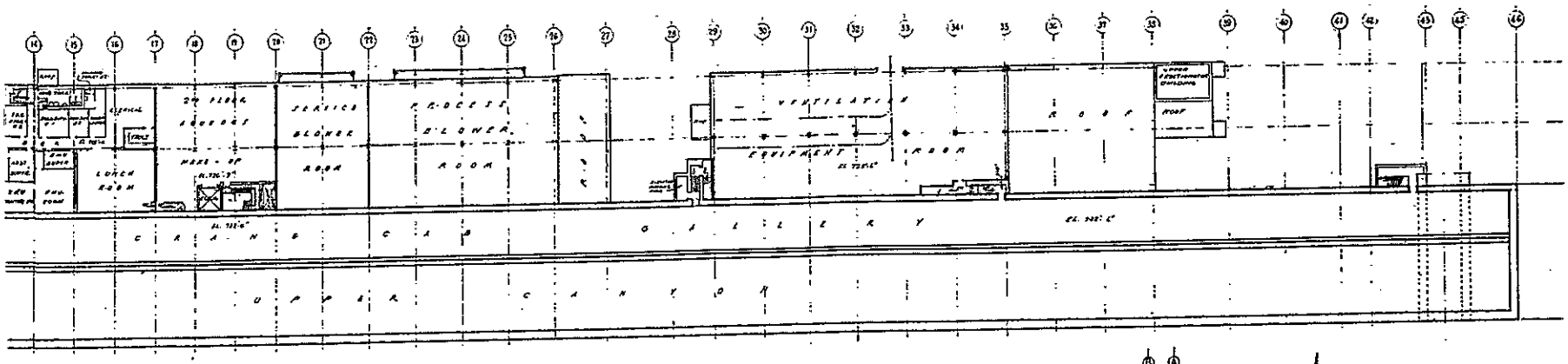

PLAN CRANE CAB GALLERY LEVEL

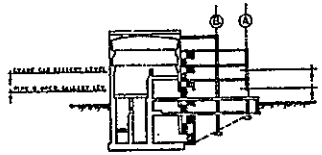

KEY SECTION

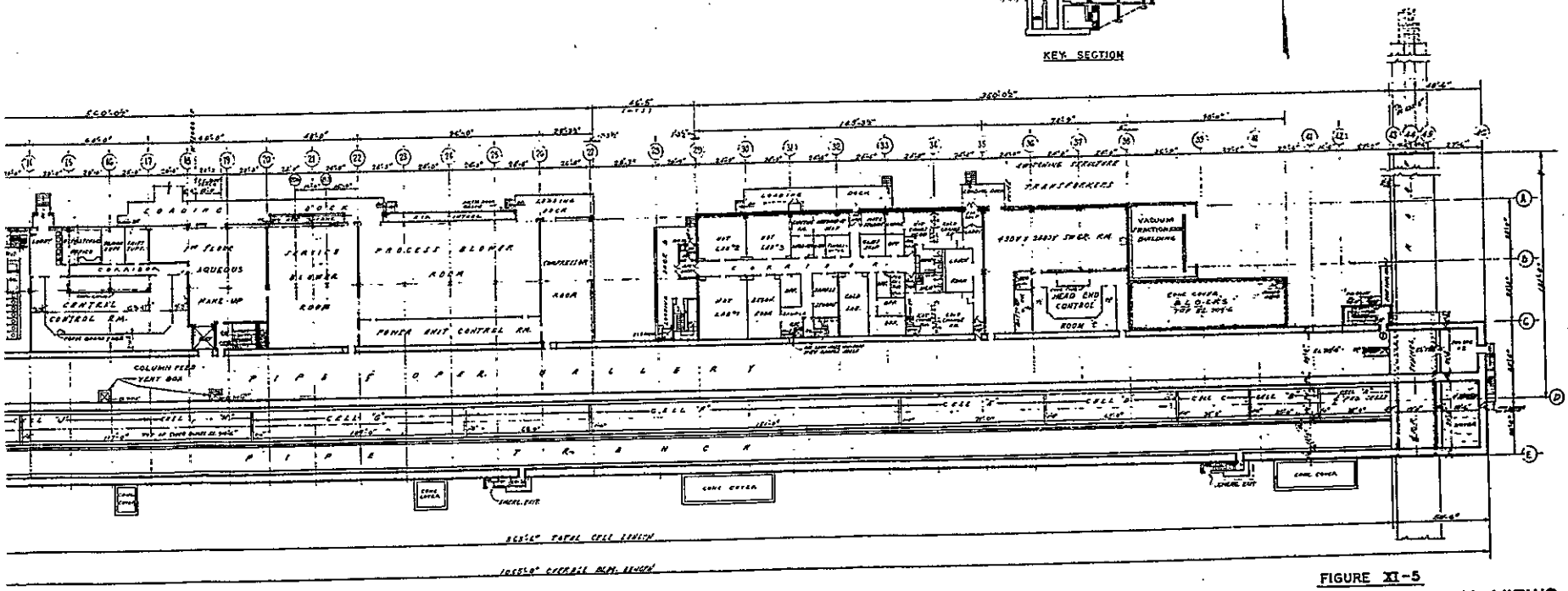

PLAN PIPE & OPERATING GALLERY LEVEL

FIGURE XI-5

202-A BUILDING-PLAN VIEWS UPPER LEVELS

(FROM H-2-52061)

SYMBOLS

(E) ELECTRICALLY OPERATED DOOR

(I) ELECTRICALLY INDICATING DOOR

[redacted]

[redacted]

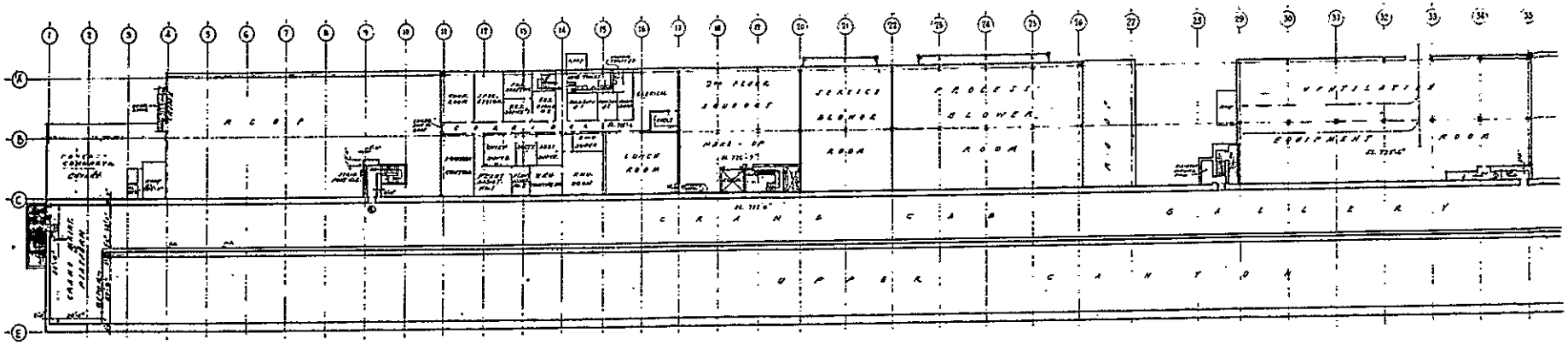

PLAN CRANE CAB GALLERY LEVEL

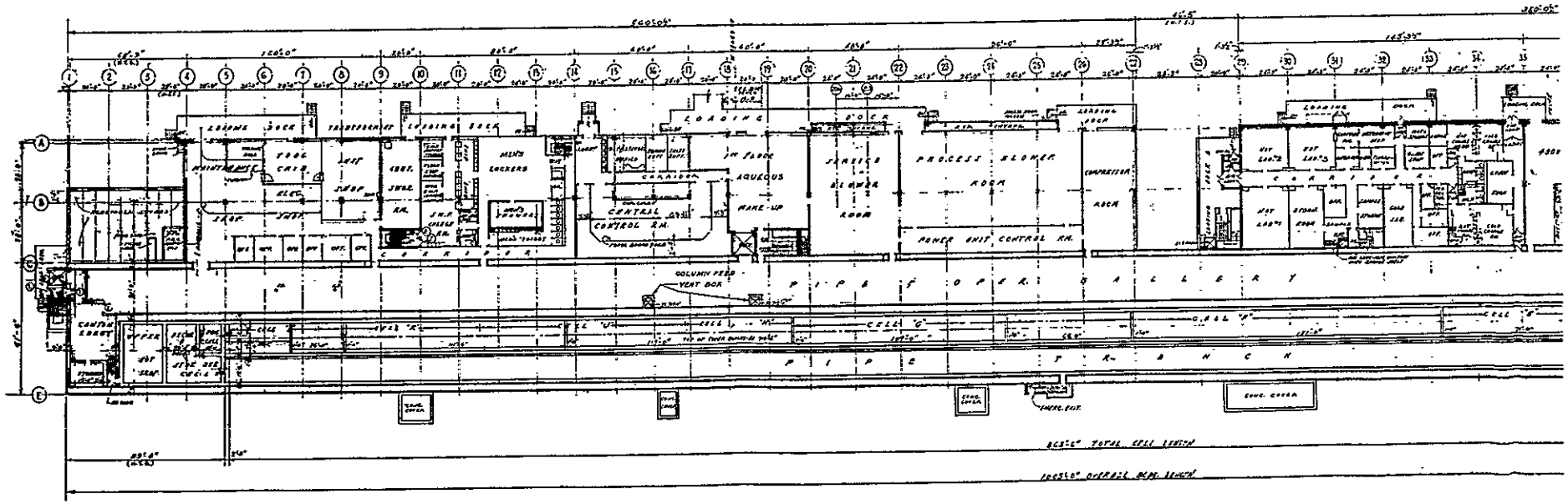

PLAN PIPE & OPERATING GALLERY LEVEL

SYMBOL:

(E) ELECTRICALLY OPERA

(I) ELECTRICALLY INDICAT

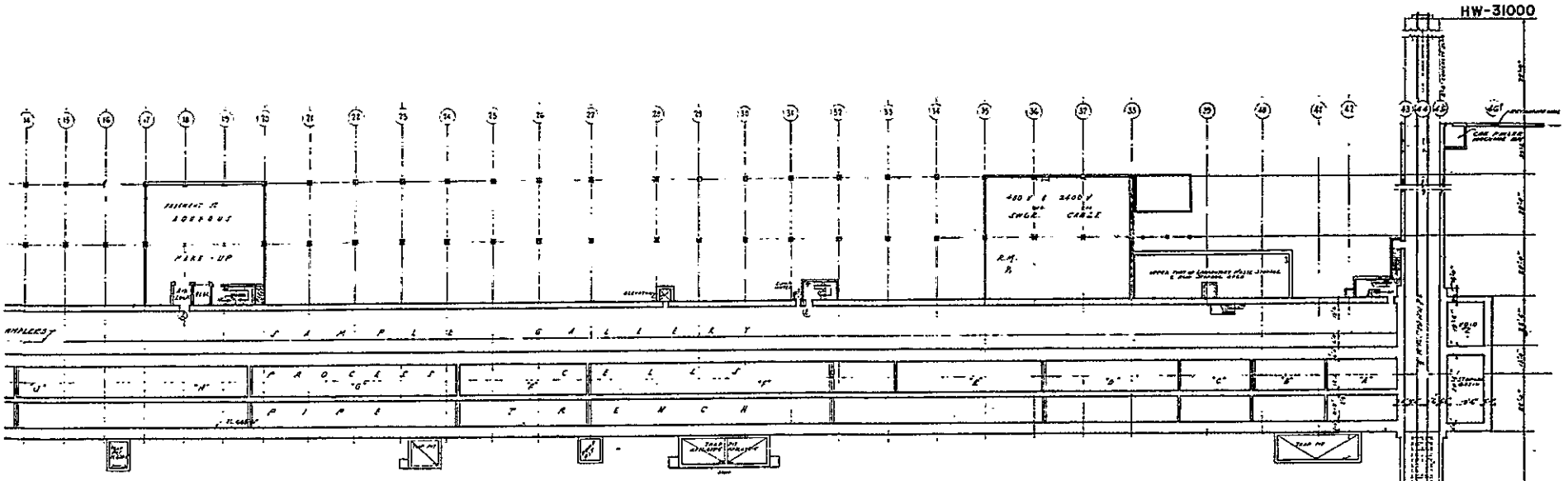

PLAN SAMPLE GALLERY LEVEL

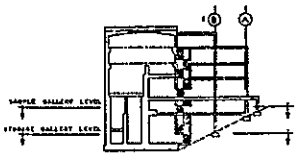

KEY SECTION

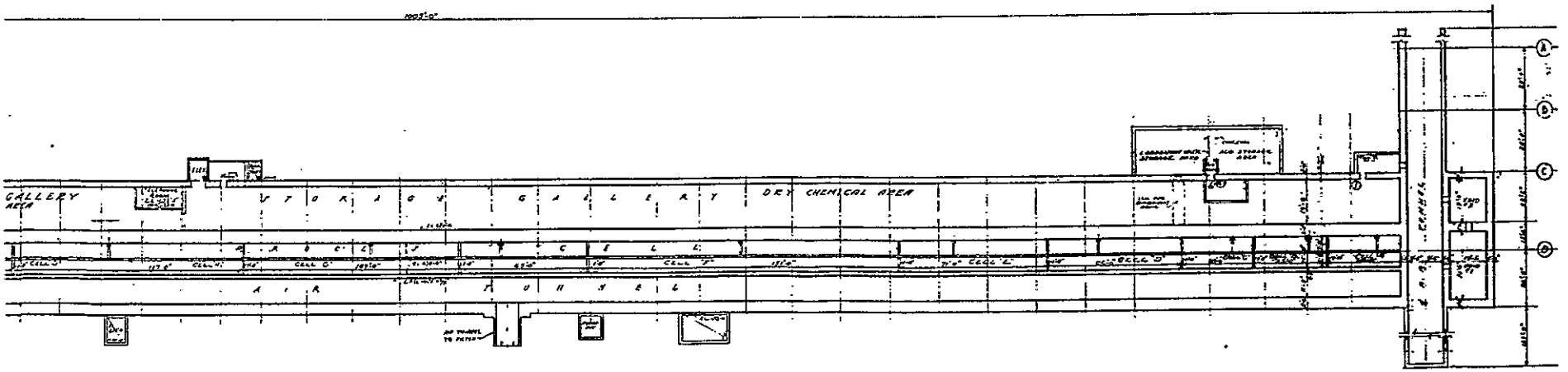

PLAN STORAGE GALLERY LEVEL

SYMBOLS

(E) ELECTRICALLY OPERATED DOOR
(I) ELECTRICALLY INDICATING DOOR

FIGURE XI-6

202-A BUILDING – PLAN VIEWS LOWER LEVELS

(FROM H-2-52062)

[redacted]

[redacted]

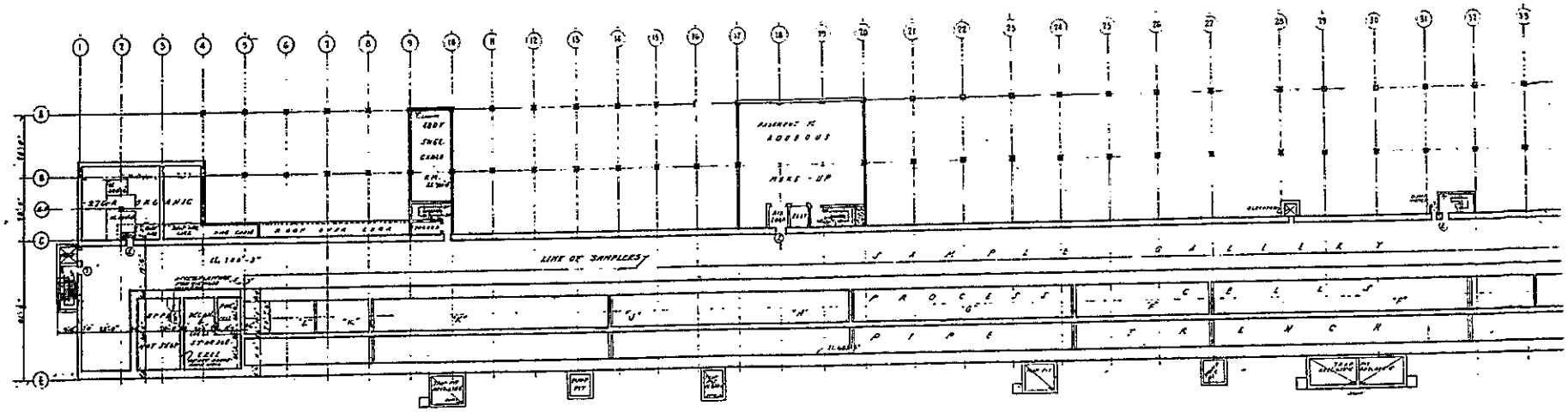

PLAN SAMPLE GALLERY LEVEL

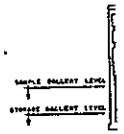

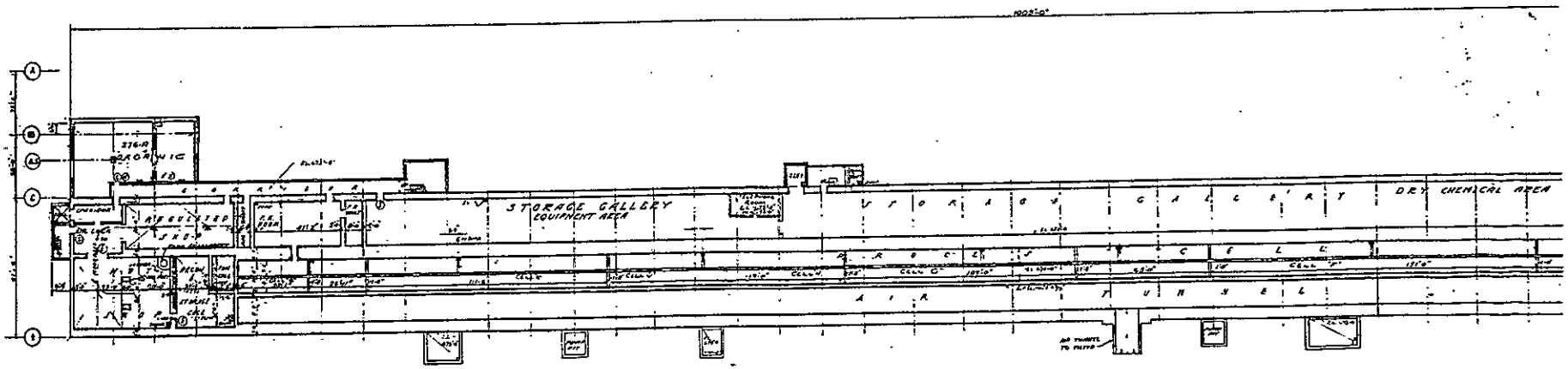

PLAN STORAGE GALLERY LEVEL

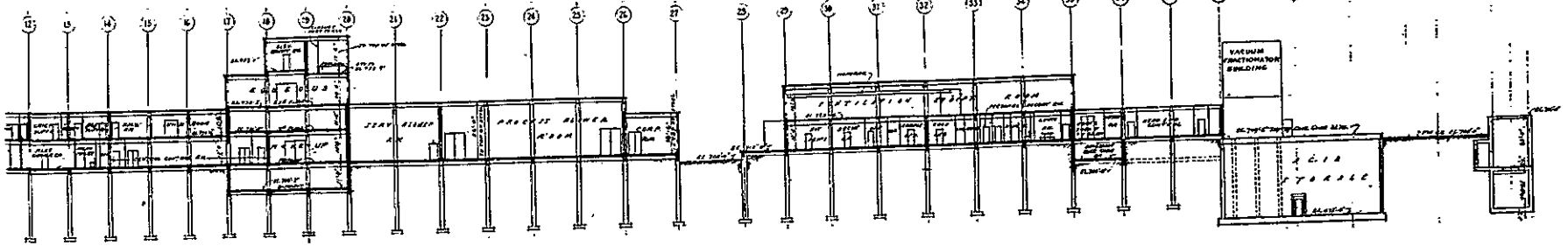

LONGITUDINAL SECTION D-D

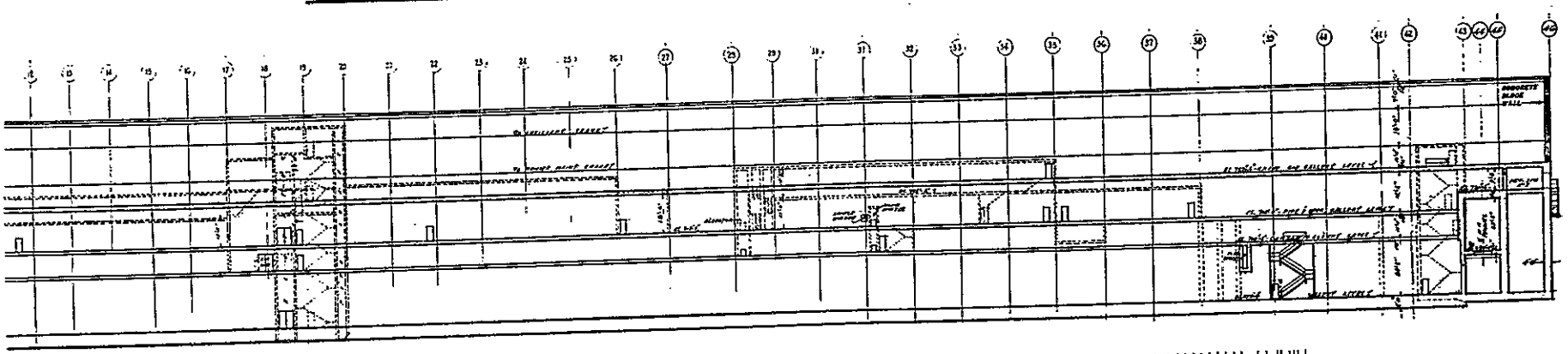

LONGITUDINAL SECTION C-C

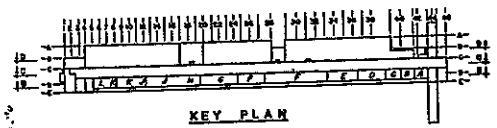

KEY PLAN

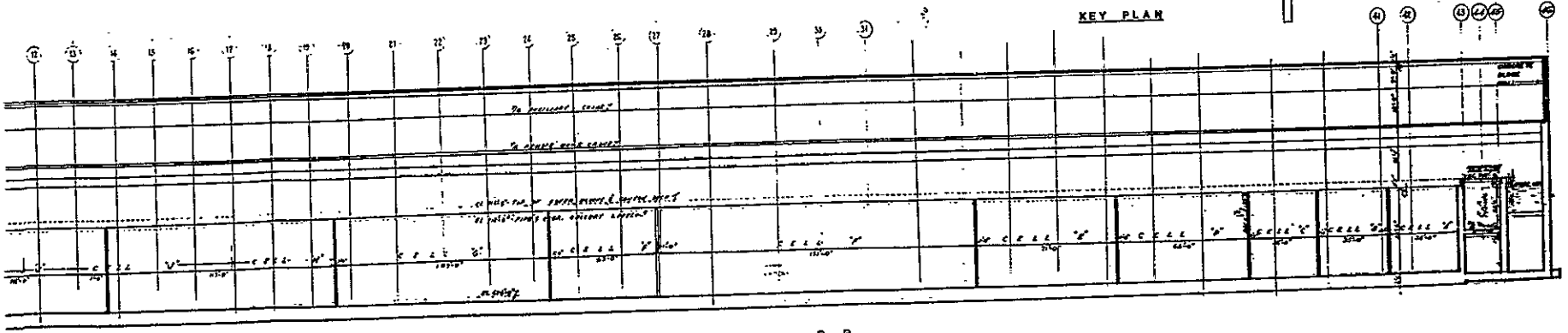

LONGITUDINAL SECTION B-B

FIGURE XI-7

202-A BUILDING - LONGITUDINAL SECTIONS

(FROM H-2-52063)

[redacted]

[redacted]

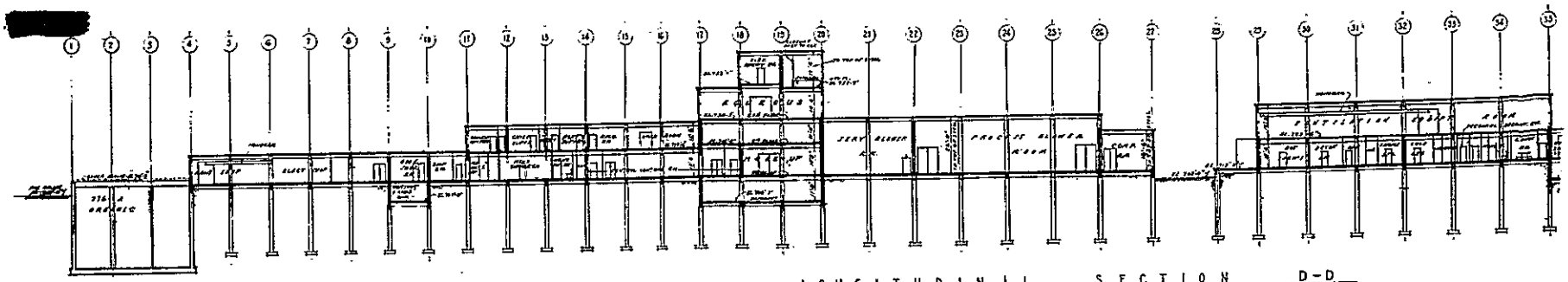

LONGITUDINAL SECTION D-D

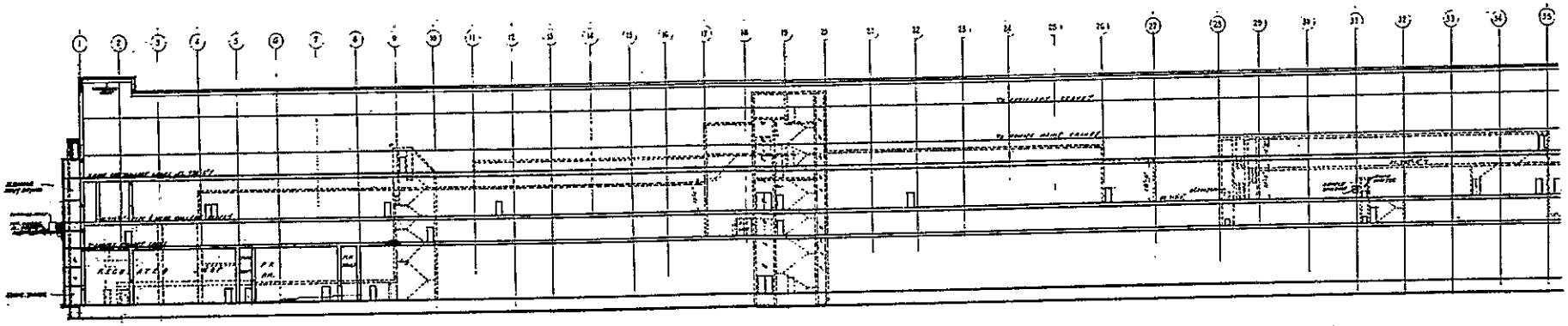

LONGITUDINAL SECTION C-C

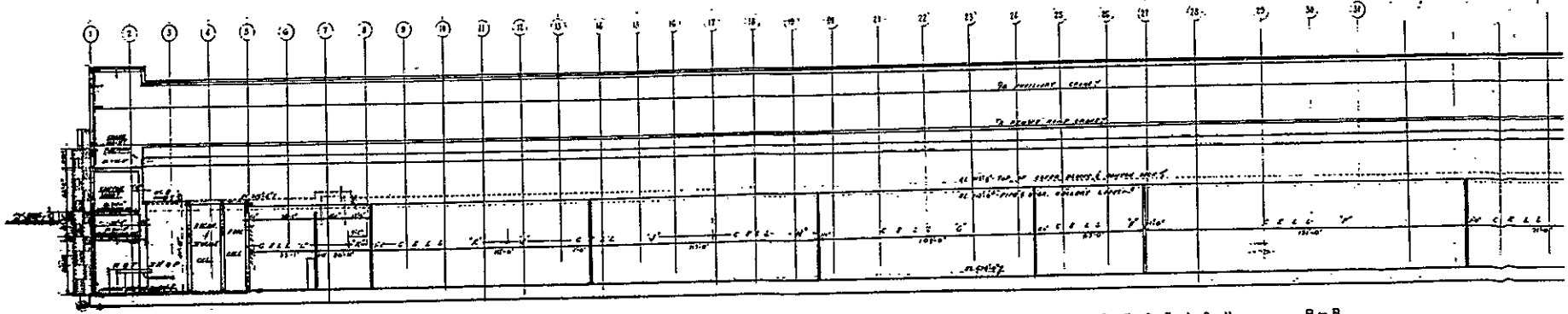

LONGITUDINAL SECTION B-B

[redacted]

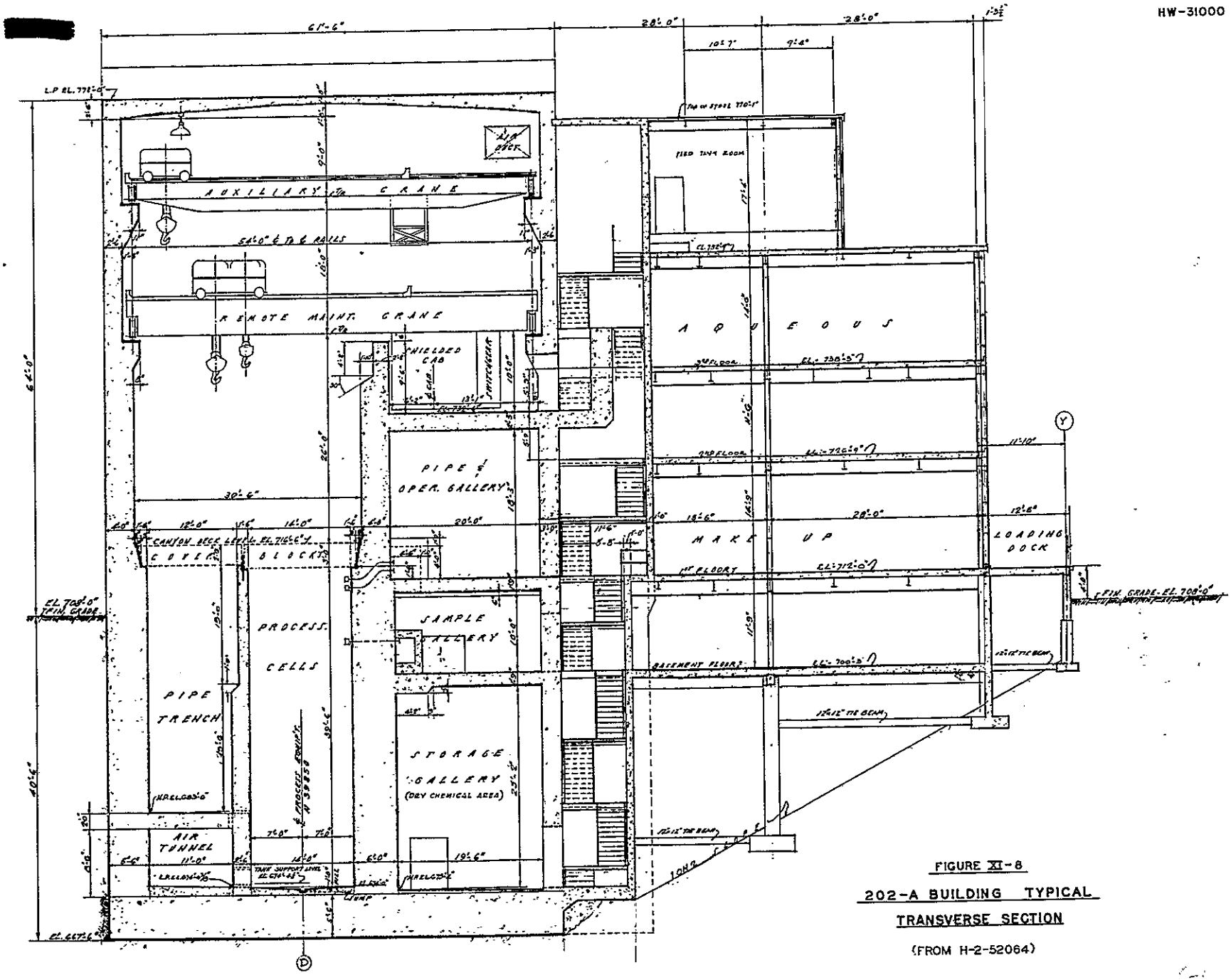

FIGURE XI-8

202-A BUILDING TYPICAL TRANSVERSE SECTION

(FROM H-2-52064)

[redacted]

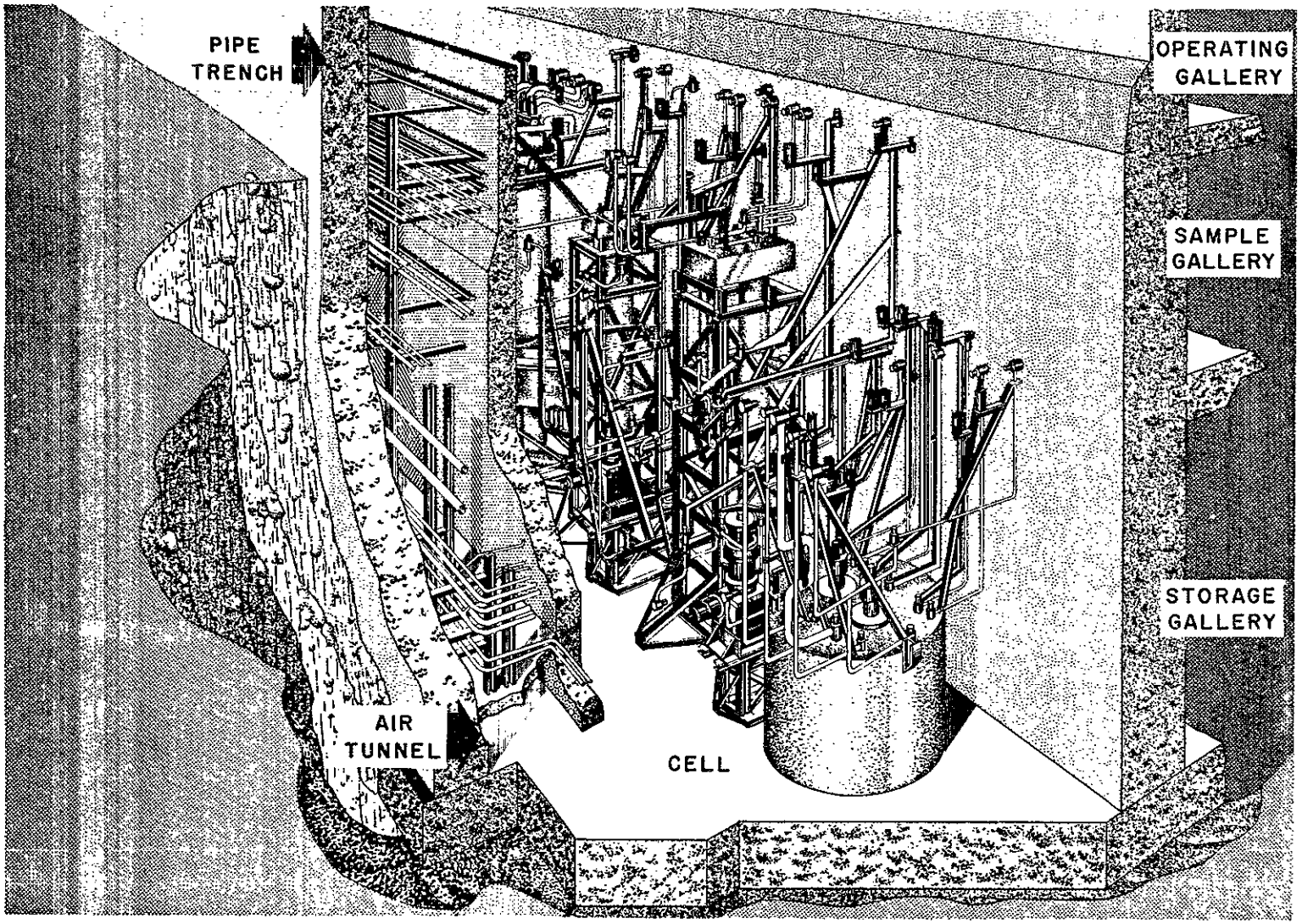

FIGURE XI-9

PERSPECTIVE CUTAWAY OF PUREX CELL AREA

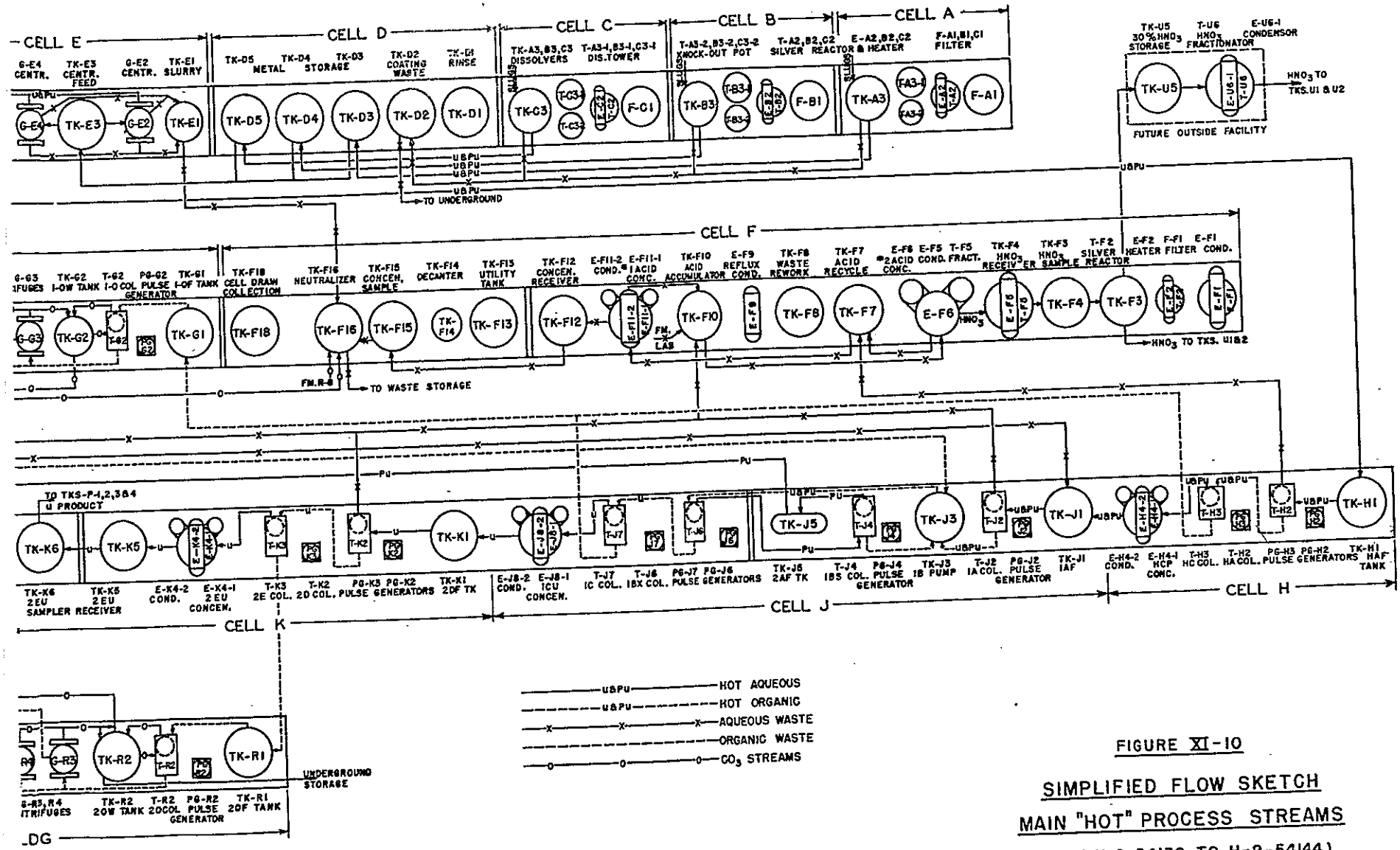

FIGURE XI-10

SIMPLIFIED FLOW SKETCH

MAIN "HOT" PROCESS STREAMS

(FROM H-2-54130 TO H-2-54144)

[redacted]

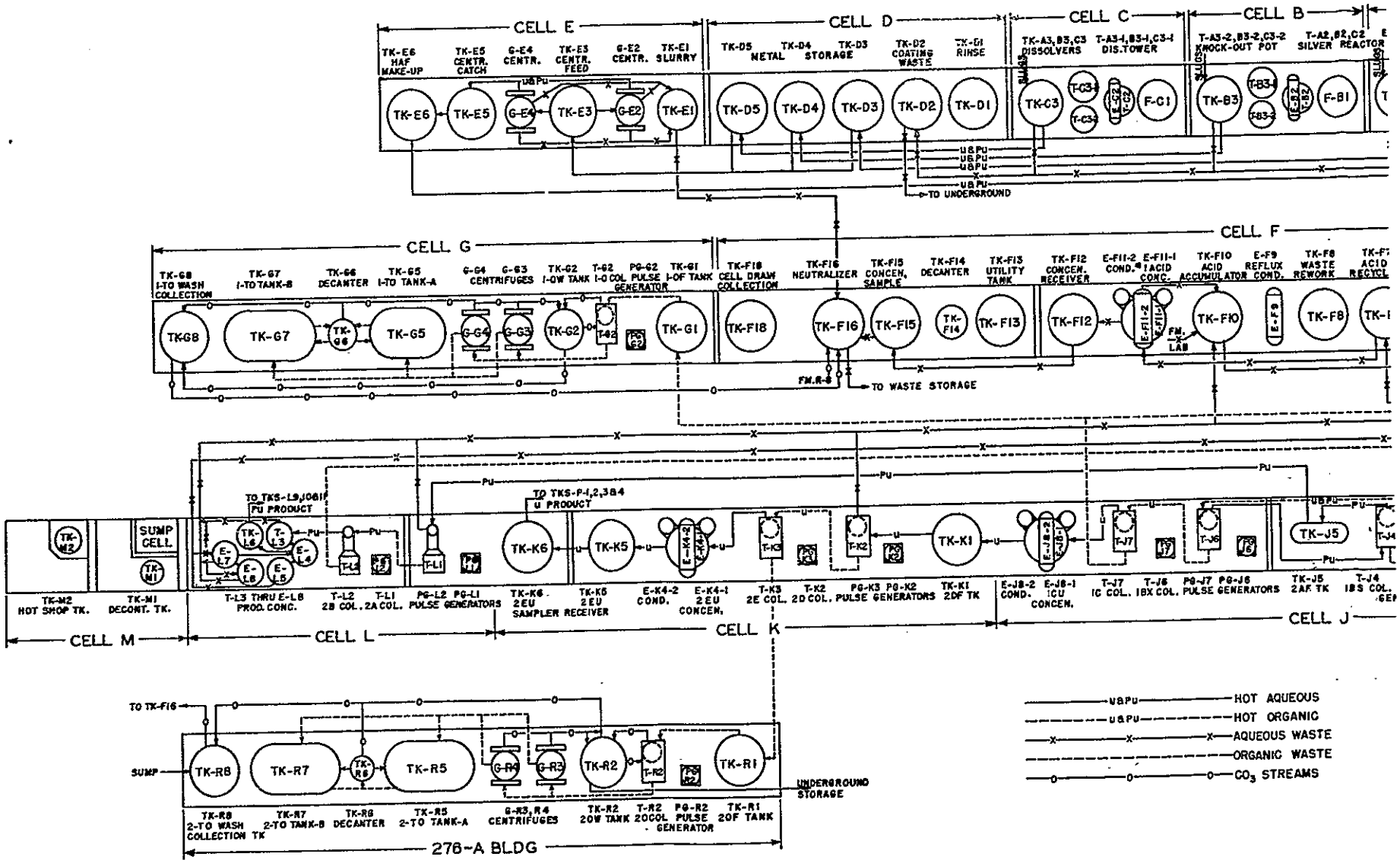

CELL E
CELL D
CELL C
CELL B
TK-E6 HAF MAKE-UP
TK-E5 CENTR. CATCH
G-E4 CENTR.
TK-E3 CENTR. FEED
G-E2 CENTR.
TK-E1 SLURRY
TK-D5 METAL
TK-D4 STORAGE
TK-D3
TK-D2 COATING WASTE
TK-D1 RINSE
TK-A3,B3,C3 DISSOLVERS
T-A3-1,B3-1,C3-1 DIS.TOWER
T-A3-2,B3-2,C3-2 KNOCK-OUT POT
T-A2,B2,C2 SILVER REACTOR
TK-E6
TK-E5
G-E4
TK-E3
G-E2
TK-E1
TK-D5
TK-D4
TK-D3
TK-D2
TK-D1
TK-C3
F-C1
TK-B3
F-B1
U&Pu
TO UNDERGROUND
CELL G
CELL F
TK-G8 I-TO WASH COLLECTION
TK-G7 I-TO TANK-B
TK-G6 DECANTER
TK-G5 I-TO TANK-A
G-G4 G-G3 CENTRIFUGES
TK-G2 I-OW TANK
T-G2 I-O COL
PG-G2 PULSE GENERATOR
TK-G1 I-OF TANK
TK-F18 CELL DRAIN COLLECTION
TK-F16 NEUTRALIZER
TK-F15 CONCEN. SAMPLE
TK-F14 DECANTER
TK-F13 UTILITY TANK
TK-F12 CONCEN. RECEIVER
E-F11-2 COND.
E-F11-1 I ACID CONC.
TK-F10 ACID ACCUMULATOR
E-F9 REFLUX COND.
TK-F8 WASTE REWORK
TK-G8
TK-G7
TK-G5
G-G4
G-G3
TK-G2
TK-G1
TK-F18
TK-F16
TK-F15
TK-F13
TK-F12
TK-F10
TK-F8
FM.R-8
TO WASTE STORAGE
FM. LAB
TO TKS-L9,J0&1P PU PRODUCT
TO TKS-P-1,2,3&4 U PRODUCT
SUMP CELL
TK-M2
TK-M1
TK-L6
T-L3
E-L7
E-L4
E-L8
E-L5
T-L2
T-L1
TK-K6
TK-K5
E-K4-2
E-K4-1
T-K3
T-K2
TK-K1
E-J8-2
E-J8-1
T-J7
T-J6
TK-J5
TK-M2 HOT SHOP TK.
TK-M1 DECONT. TK.
T-L3 THRU E-L8 PROD. CONC.
T-L2 2B COL.
T-L1 2A COL.
PG-L2 PG-L1 PULSE GENERATORS
TK-K6 2EU SAMPLER
TK-K5 2EU RECEIVER
E-K4-2 COND.
E-K4-1 2EU CONCEN.
T-K3 2E COL.
T-K2 2D COL.
PG-K3 PG-K2 PULSE GENERATORS
TK-K1 2DF TK
E-J8-2 COND.
E-J8-1 ICU CONCEN.
T-J7 IC COL.
T-J6 IBX COL.
PG-J7 PG-J6 PULSE GENERATORS
TK-J5 2AF TK
T-J4 IBS COL.
CELL M
CELL L
CELL K
CELL J
TO TK-F16
SUMP
TK-R8
TK-R7
TK-R5
G-R4
G-R3
TK-R2
T-R2
TK-R1
UNDERGROUND STORAGE
TK-R8 2-TO WASH COLLECTION TK
TK-R7 2-TO TANK-B
TK-R6 DECANTER
TK-R5 2-TO TANK-A
G-R3,R4 CENTRIFUGES
TK-R2 20W TANK
T-R2 20COL
PG-R2 PULSE GENERATOR
TK-R1 20F TANK
276-A BLDG
U&Pu HOT AQUEOUS
U&Pu HOT ORGANIC
AQUEOUS WASTE
ORGANIC WASTE
CO_3 STREAMS

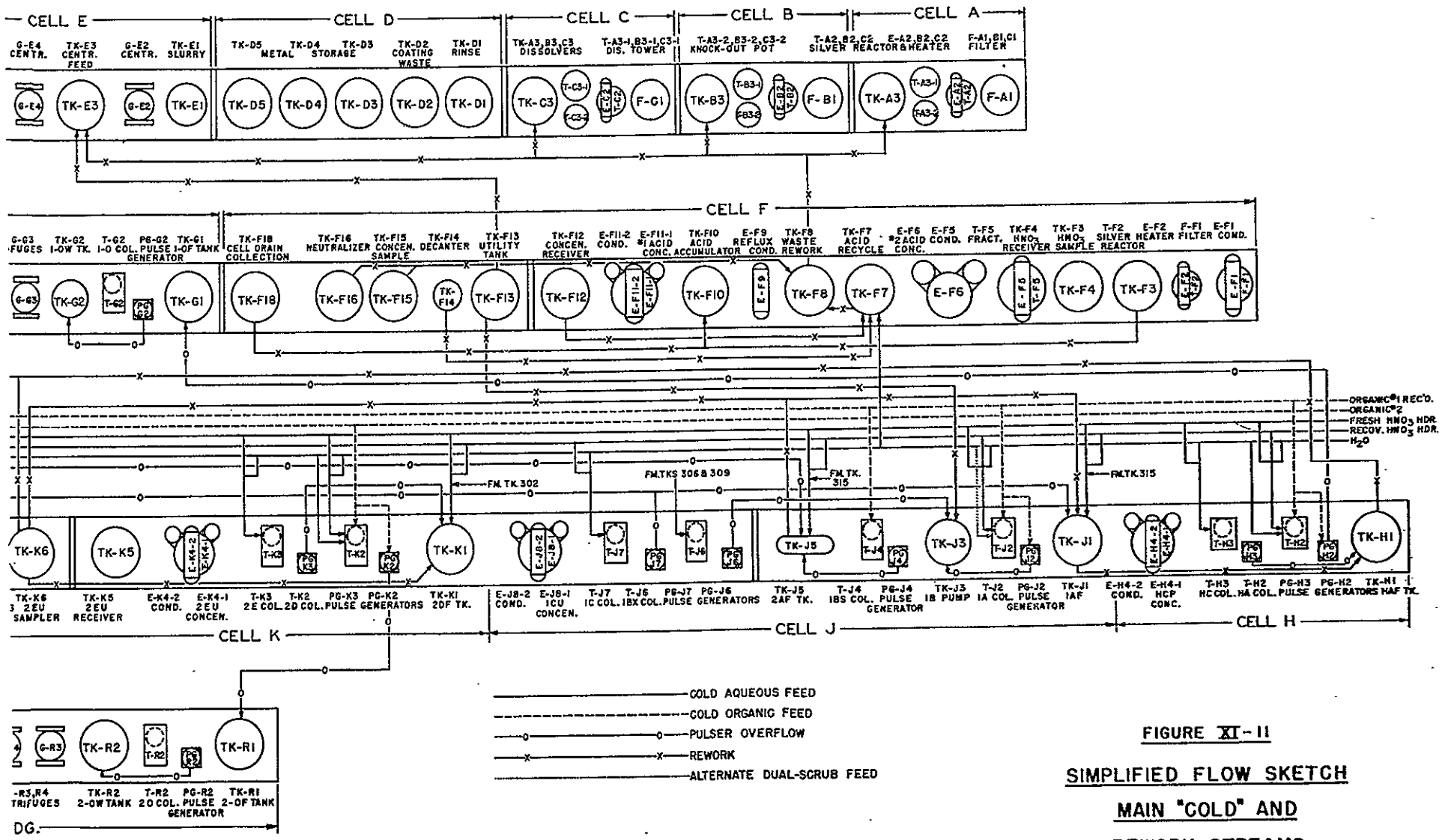

FIGURE XI-11

SIMPLIFIED FLOW SKETCH

MAIN "COLD" AND

REWORK STREAMS

(FROM H-2-54130 TO H-2-54144)

[redacted]

[redacted]

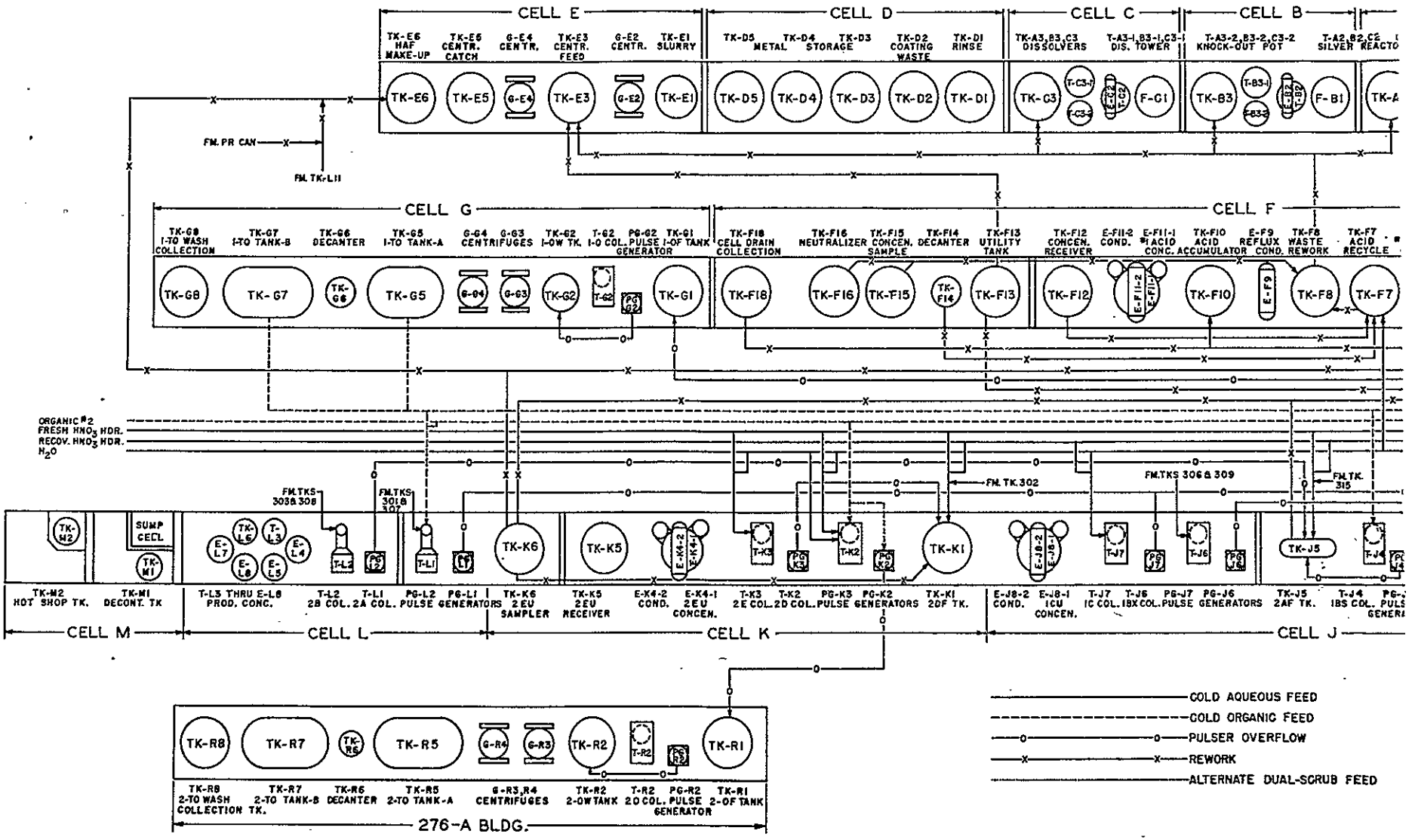
CELL E
CELL D
CELL C
CELL B
TK-E6 HAF MAKE-UP
TK-E5 CENTR. CATCH
G-E4 CENTR.
TK-E3 CENTR. FEED
G-E2 CENTR.
TK-E1 SLURRY
TK-D5 METAL
TK-D4 STORAGE
TK-D3
TK-D2 COATING WASTE
TK-D1 RINSE
TK-A3,B3,C3 DISSOLVERS
T-A3-1,B3-1,C3-1 DIS. TOWER
T-A3-2,B3-2,C3-2 KNOCK-OUT POT
T-A2,B2,C2 SILVER REACTO
FM. PR CAN
FM. TK-L11
CELL G
CELL F
TK-G8 I-TO WASH COLLECTION
TK-G7 I-TO TANK-B
TK-G6 DECANTER
TK-G5 I-TO TANK-A
G-G4 CENTRIFUGES
G-G3
TK-G2 I-OW TK.
T-G2 I-O COL.
PG-G2 PULSE GENERATOR
TK-G1 I-OF TANK
TK-F18 CELL DRAIN COLLECTION
TK-F16 NEUTRALIZER
TK-F15 CONCEN. SAMPLE
TK-F14 DECANTER
TK-F13 UTILITY TANK
TK-F12 CONCEN. RECEIVER
E-F11-2 COND.
E-F11-1 ACID CONC.
TK-F10 ACID ACCUMULATOR
E-F9 REFLUX COND.
TK-F8 WASTE REWORK
TK-F7 ACID RECYCLE
ORGANIC #2
FRESH HNO3 HDR.
RECOV. HNO3 HDR.
H2O
FM. TKS 303 & 308
FM. TKS 301 & 307
FM. TK. 302
FM. TKS 306 & 309
FM. TK. 315
SUMP CELL
TK-M2 HOT SHOP TK.
TK-M1 DECONT. TK
T-L3 THRU E-L8 PROD. CONC.
T-L2 2B COL.
T-L1 2A COL.
PG-L2 PULSE GENERATORS
PG-L1
TK-K6 2EU SAMPLER
TK-K5 2EU RECEIVER
E-K4-2 COND.
E-K4-1 2EU CONCEN.
T-K3 2E COL.
T-K2 2D COL.
PG-K3 PULSE GENERATORS
PG-K2
TK-K1 2DF TK.
E-J8-2 COND.
E-J8-1 1CU CONCEN.
T-J7 1C COL.
T-J6 1BX COL.
PG-J7 PULSE GENERATORS
PG-J6
TK-J5 2AF TK.
T-J4 1BS COL.
CELL M
CELL L
CELL K
CELL J
TK-R8 2-TO WASH COLLECTION TK.
TK-R7 2-TO TANK-B
TK-R6 DECANTER
TK-R5 2-TO TANK-A
G-R3,R4 CENTRIFUGES
TK-R2 2-OW TANK
T-R2 2O COL.
PG-R2 PULSE GENERATOR
TK-R1 2-OF TANK
276-A BLDG.
COLD AQUEOUS FEED
COLD ORGANIC FEED
PULSER OVERFLOW
REWORK
ALTERNATE DUAL-SCRUB FEED

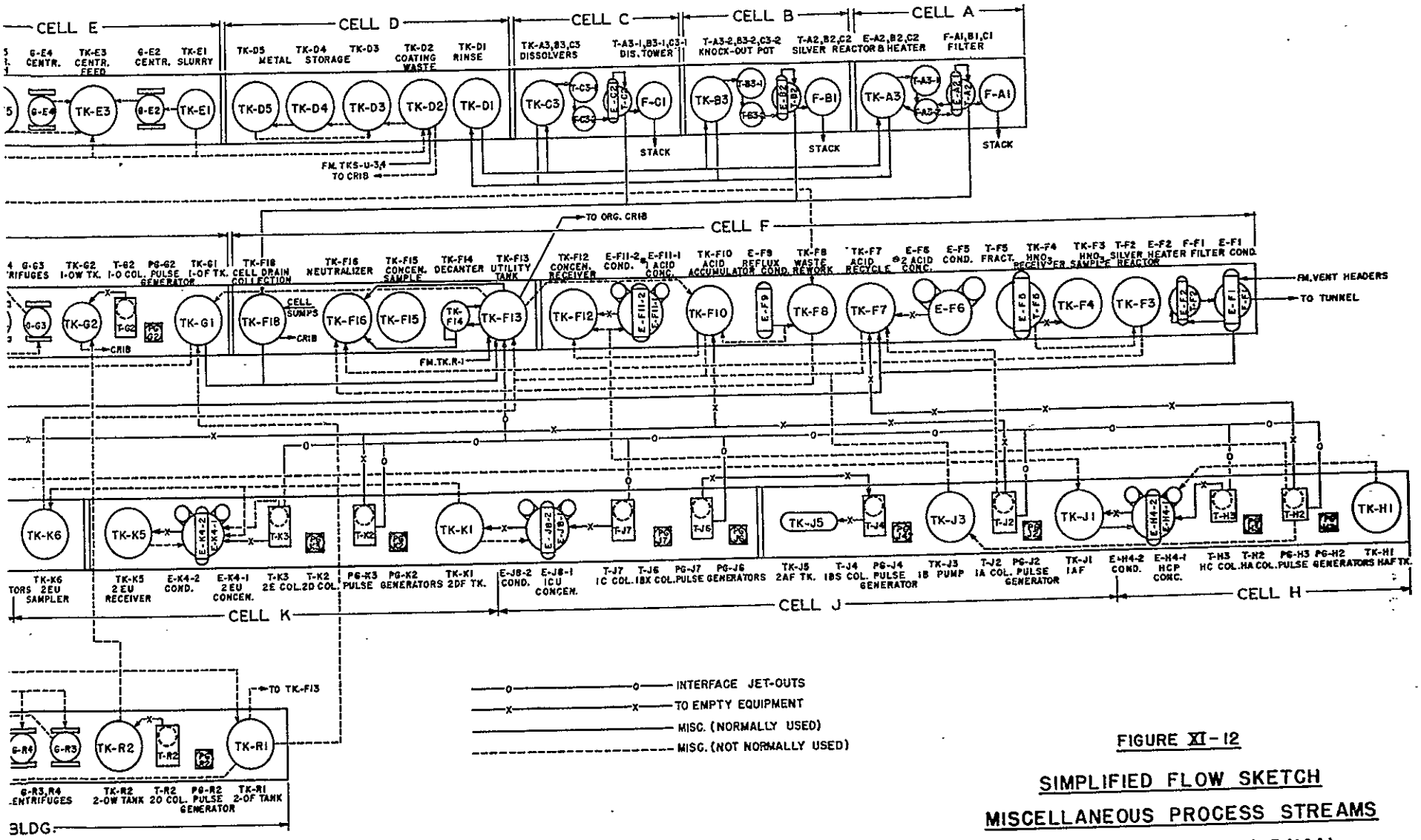

FIGURE XI-12

SIMPLIFIED FLOW SKETCH

MISCELLANEOUS PROCESS STREAMS

(FROM H-2-54130 TO H-2-54144)

[redacted]

[redacted]

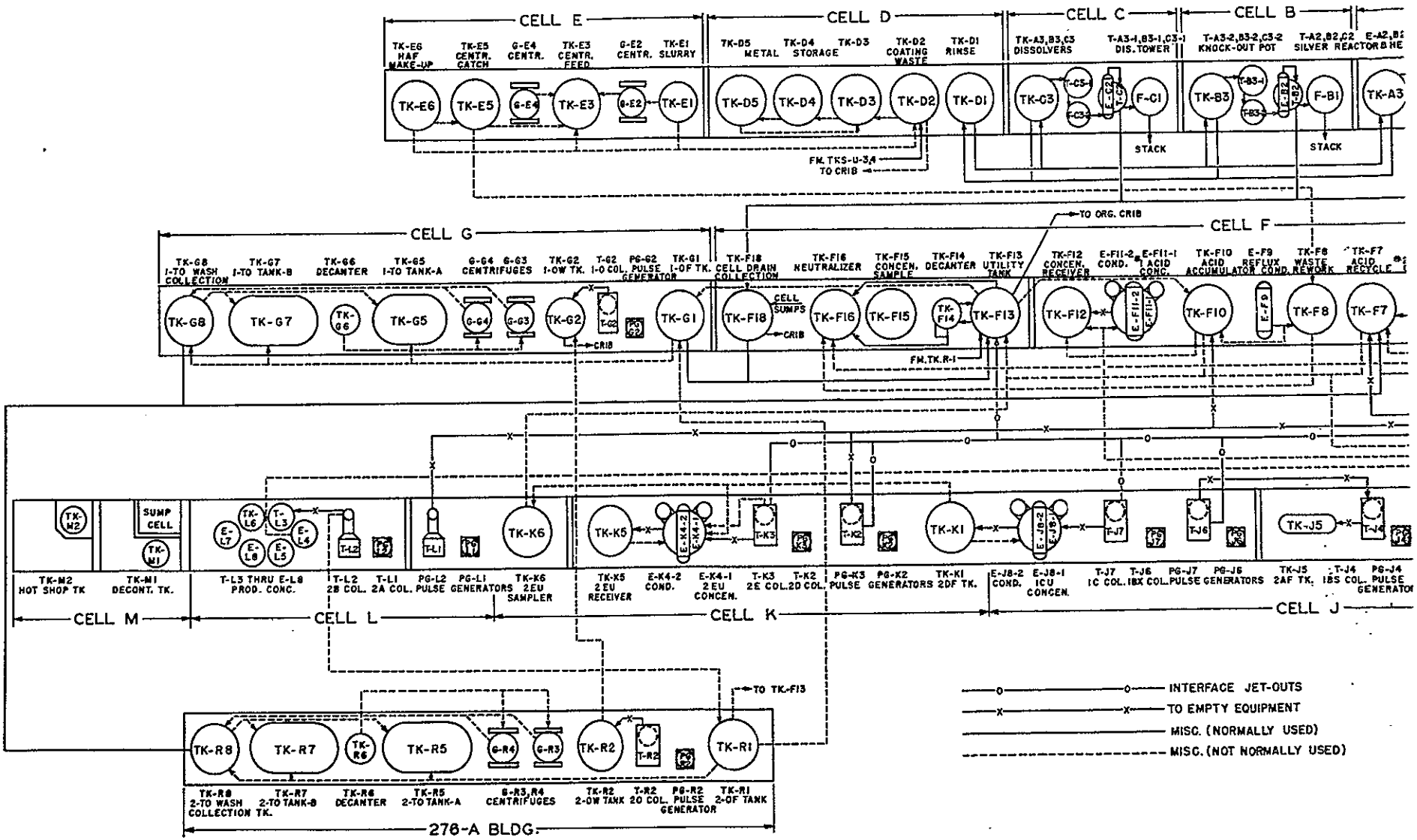
CELL E
TK-E6 HAF MAKE-UP
TK-E5 CENTR. CATCH
G-E4 CENTR.
TK-E3 CENTR. FEED
G-E2 CENTR.
TK-E1 SLURRY
CELL D
TK-D5 METAL
TK-D4 STORAGE
TK-D3
TK-D2 COATING WASTE
TK-D1 RINSE
CELL C
TK-A3,B3,C3 DISSOLVERS
T-A3-1,B3-1,C3-1 DIS. TOWER
CELL B
T-A3-2,B3-2,C3-2 KNOCK-OUT POT
T-A2,B2,C2 SILVER REACTOR
STACK
FM. TKS-U-3,4 TO CRIB
TO ORG. CRIB
CELL G
TK-G8 1-TO WASH COLLECTION
TK-G7 1-TO TANK-B
TK-G6 DECANTER
TK-G5 1-TO TANK-A
G-G4 CENTRIFUGES
G-G3
TK-G2 1-OW TK.
T-G2 1-O COL.
PG-G2 PULSE GENERATOR
TK-G1 1-OF TK.
CRIB
CELL F
TK-F18 CELL DRAIN COLLECTION
CELL SUMPS
TK-F16 NEUTRALIZER
TK-F15 CONCEN. SAMPLE
TK-F14 DECANTER
TK-F13 UTILITY TANK
TK-F12 CONCEN. RECEIVER
E-F11-2 COND.
E-F11-1 1 ACID CONC.
TK-F10 ACID ACCUMULATOR
E-F9 REFLUX COND.
TK-F8 WASTE REWORK
TK-F7 ACID RECYCLE
FM.TK.R-1
TK-M2 HOT SHOP TK
TK-M1 DECONT. TK.
SUMP CELL
T-L3 THRU E-L8 PROD. CONC.
T-L2 2B COL.
T-L1 2A COL.
PG-L2 PULSE
PG-L1 GENERATORS
TK-K6 2EU SAMPLER
TK-K5 2 EU RECEIVER
E-K4-2 COND.
E-K4-1 2 EU CONCEN.
T-K3 2E COL.
T-K2 2D COL.
PG-K3 PULSE
PG-K2 GENERATORS
TK-K1 2DF TK.
E-J8-2 COND.
E-J8-1 1CU CONCEN.
T-J7 1C COL.
T-J6 1BX COL.
PG-J7 PULSE
PG-J6 GENERATORS
TK-J5 2AF TK.
T-J4 1BS COL.
PG-J4 PULSE GENERATOR
CELL M
CELL L
CELL K
CELL J
TO TK-F13
TK-R8 2-TO WASH COLLECTION TK.
TK-R7 2-TO TANK-B
TK-R6 DECANTER
TK-R5 2-TO TANK-A
G-R3,R4 CENTRIFUGES
TK-R2 2-OW TANK
T-R2 2O COL.
PG-R2 PULSE GENERATOR
TK-R1 2-OF TANK
276-A BLDG.
INTERFACE JET-OUTS
TO EMPTY EQUIPMENT
MISC. (NORMALLY USED)
MISC. (NOT NORMALLY USED)

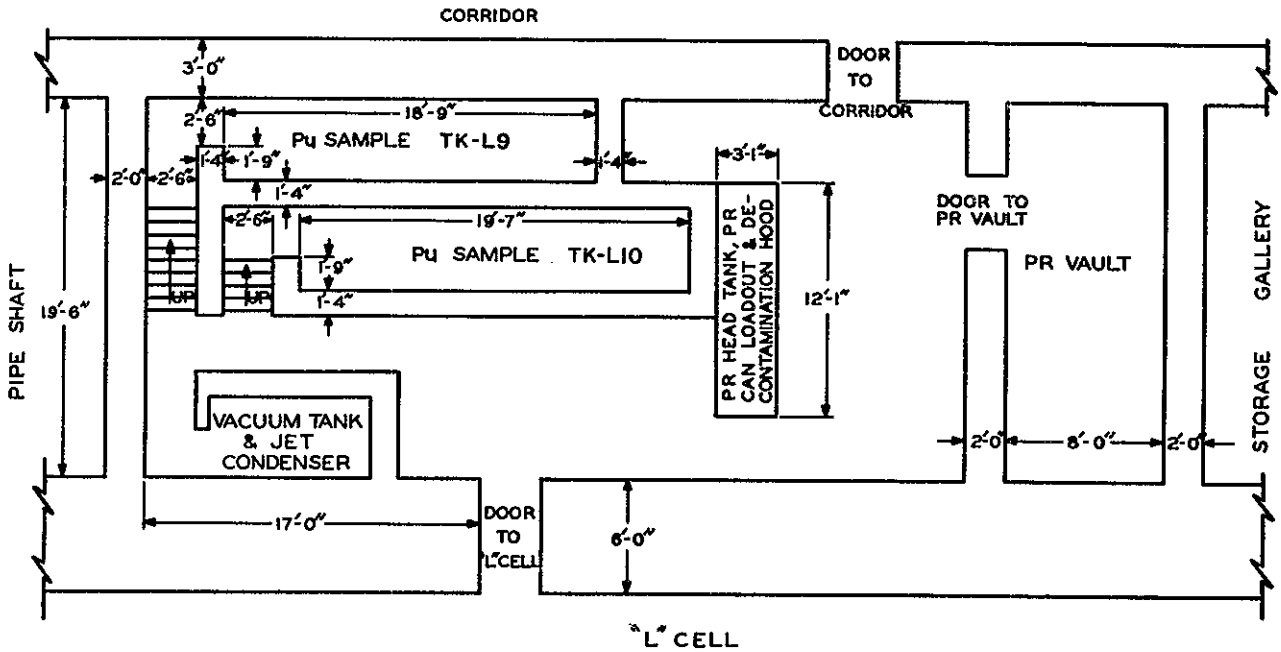

ARCHITECTURAL PLAN (SHOWING SHIELD WALLS)

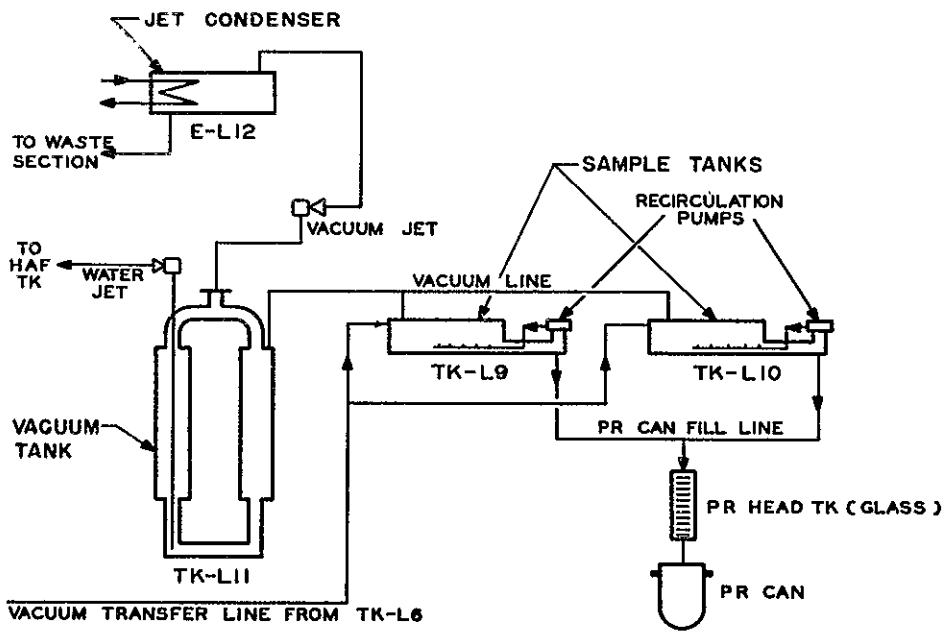

EQUIPMENT LAYOUT

FIGURE XI-13

PR ROOM

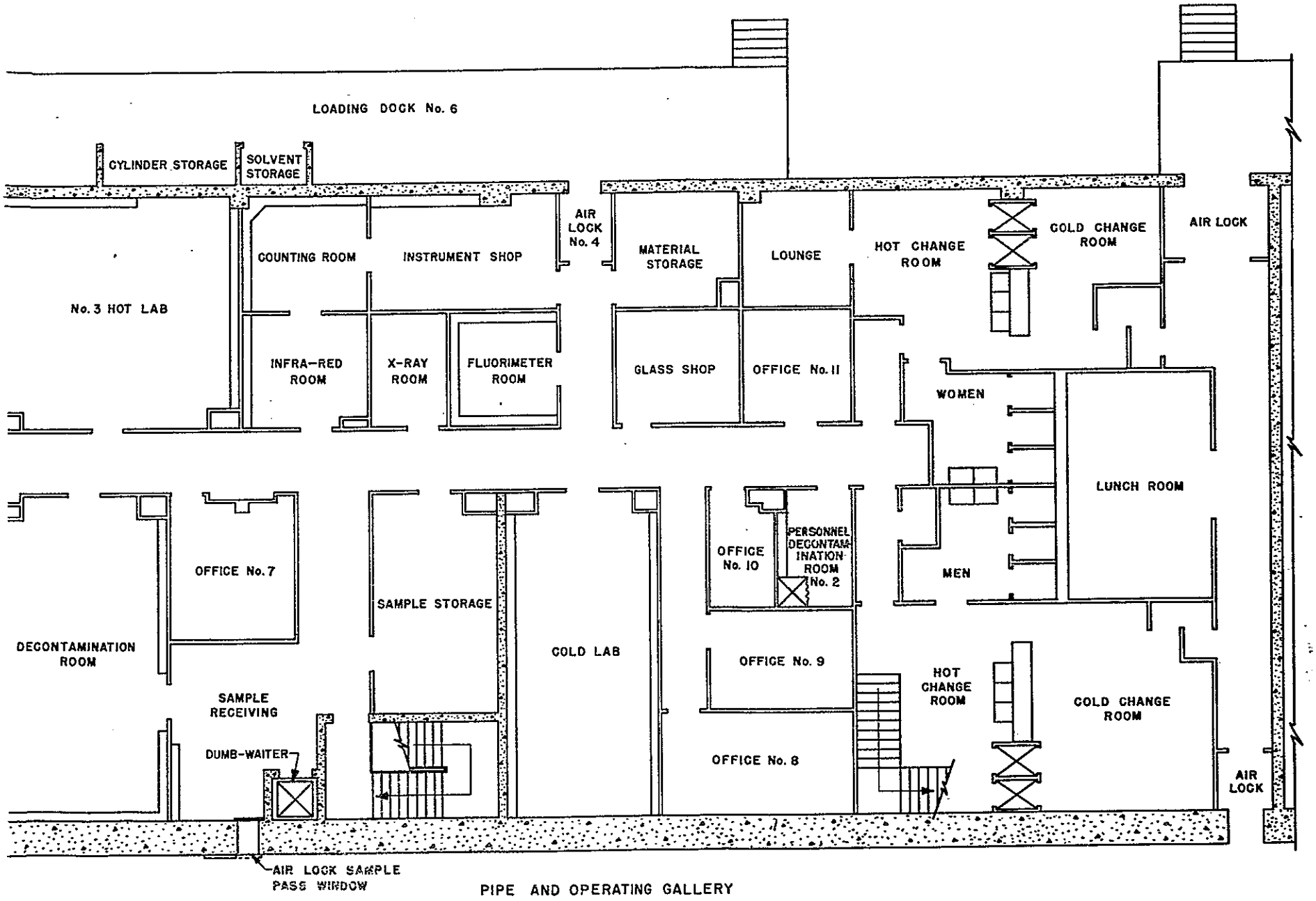

FIGURE XI-14

202-A BUILDING-LABORATORY WORKING AREA

[redacted]

[redacted]

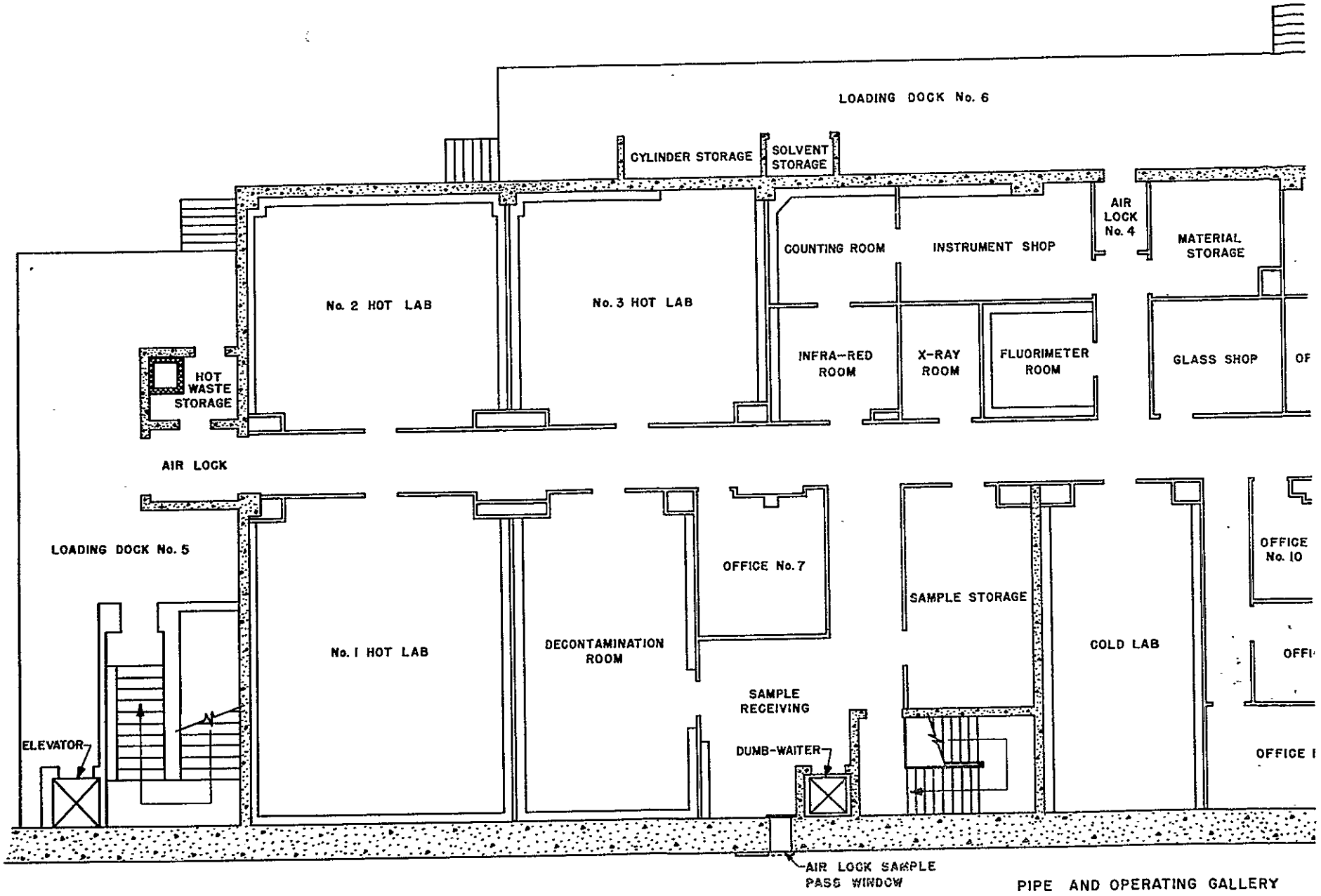
LOADING DOCK No. 6
CYLINDER STORAGE
SOLVENT STORAGE
AIR LOCK No. 4
MATERIAL STORAGE
COUNTING ROOM
INSTRUMENT SHOP
No. 2 HOT LAB
No. 3 HOT LAB
HOT WASTE STORAGE
INFRA-RED ROOM
X-RAY ROOM
FLUORIMETER ROOM
GLASS SHOP
AIR LOCK
LOADING DOCK No. 5
OFFICE No. 7
OFFICE No. 10
SAMPLE STORAGE
No. 1 HOT LAB
DECONTAMINATION ROOM
COLD LAB
SAMPLE RECEIVING
ELEVATOR
DUMB-WAITER
AIR LOCK SAMPLE PASS WINDOW
PIPE AND OPERATING GALLERY

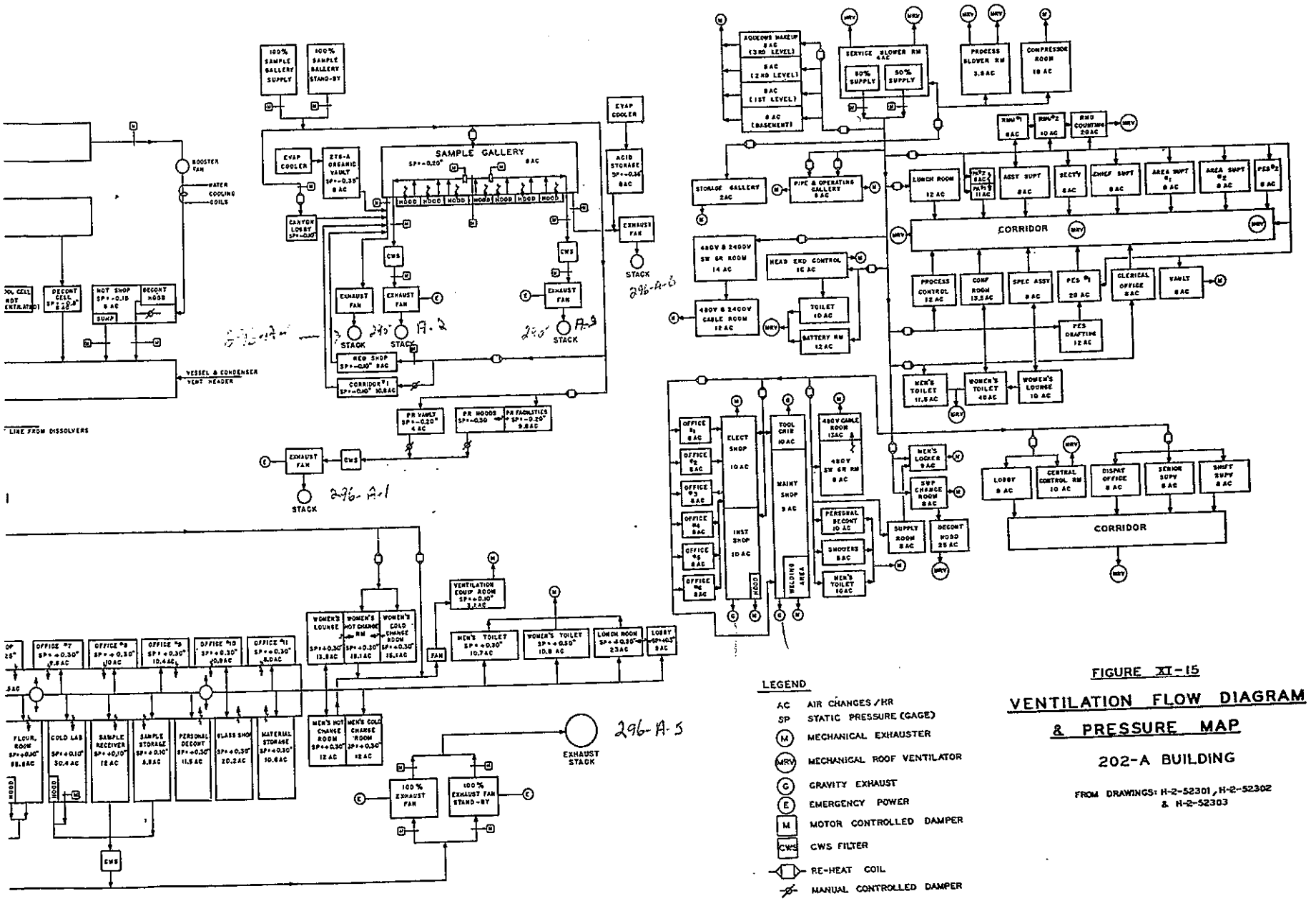

FIGURE XI-15

VENTILATION FLOW DIAGRAM & PRESSURE MAP

202-A BUILDING

FROM DRAWINGS: H-2-52301, H-2-52302 & H-2-52303

[redacted]

[redacted]

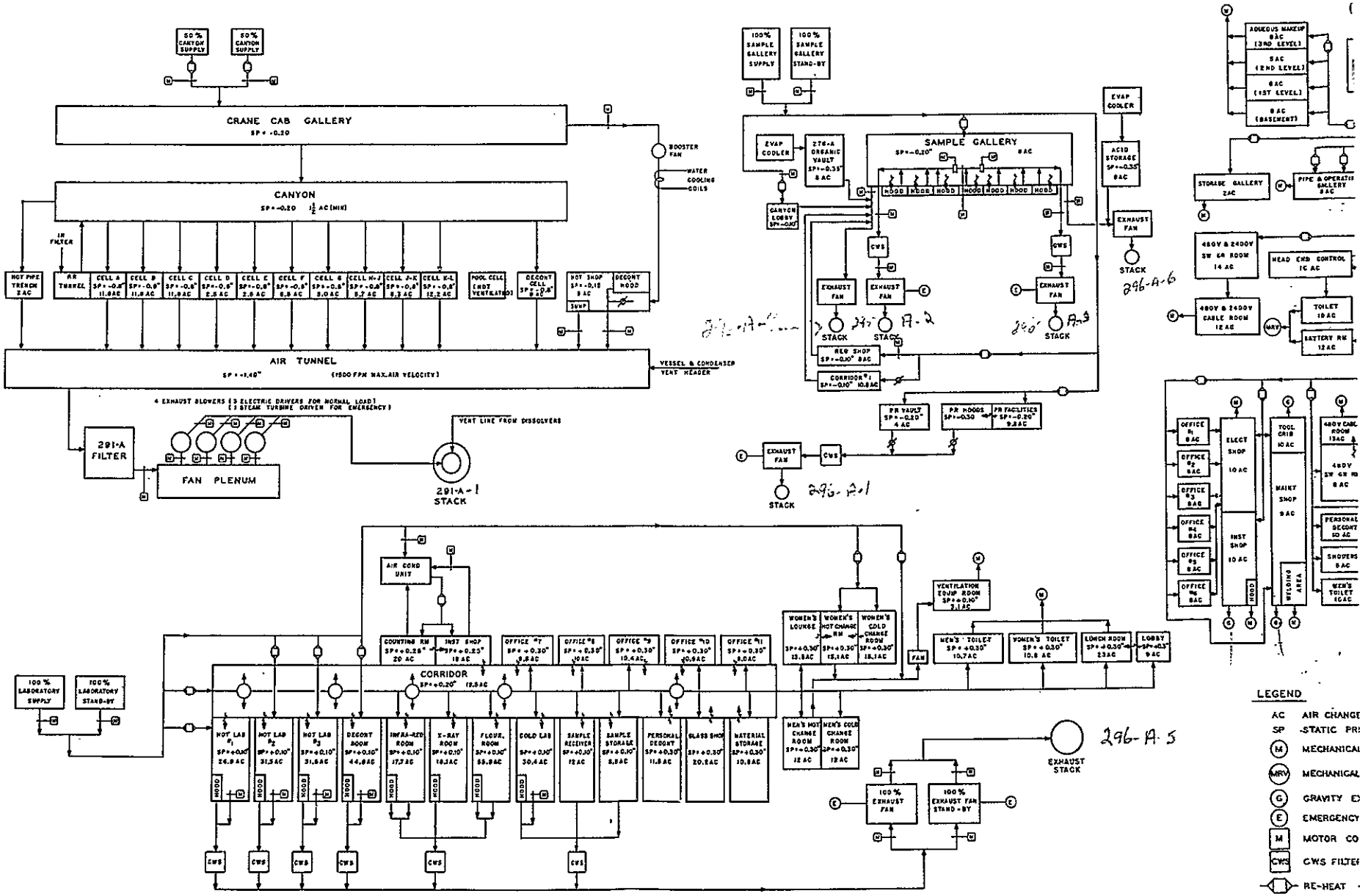

CRANE CAB GALLERY
CANYON
AIR TUNNEL
291-A FILTER
FAN PLENUM
291-A-1 STACK
SAMPLE GALLERY
CORRIDOR
296-A-6
296-A-1
296-A-5
EXHAUST STACK
LEGEND
AC AIR CHANGE
SP STATIC PR
MECHANICAL
MECHANICAL
GRAVITY E
EMERGENCY
MOTOR CO
CWS FILTER
RE-HEAT
MANUAL CO

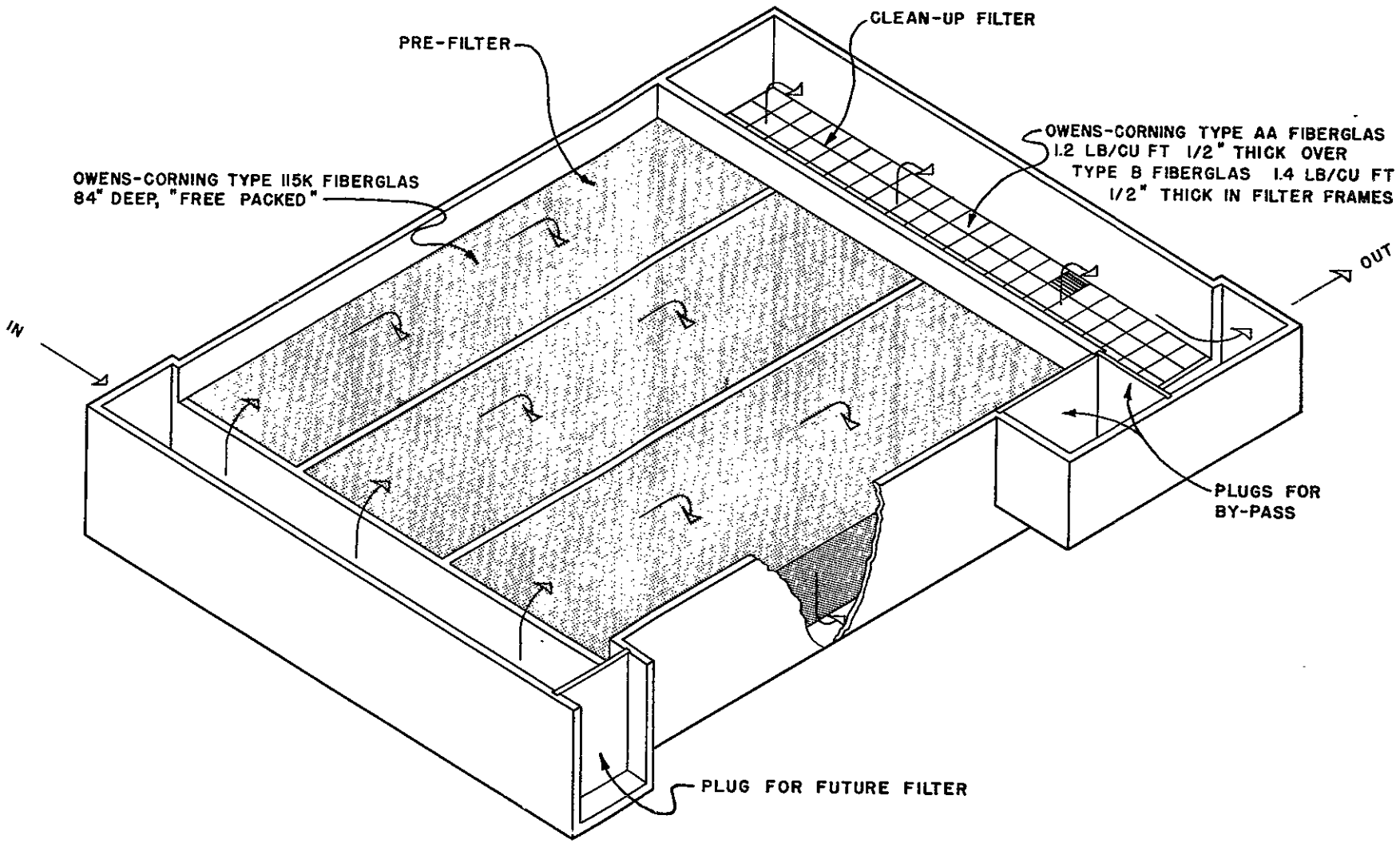

FIGURE XI-16

CUTAWAY OF VENTILATION AIR FILTER

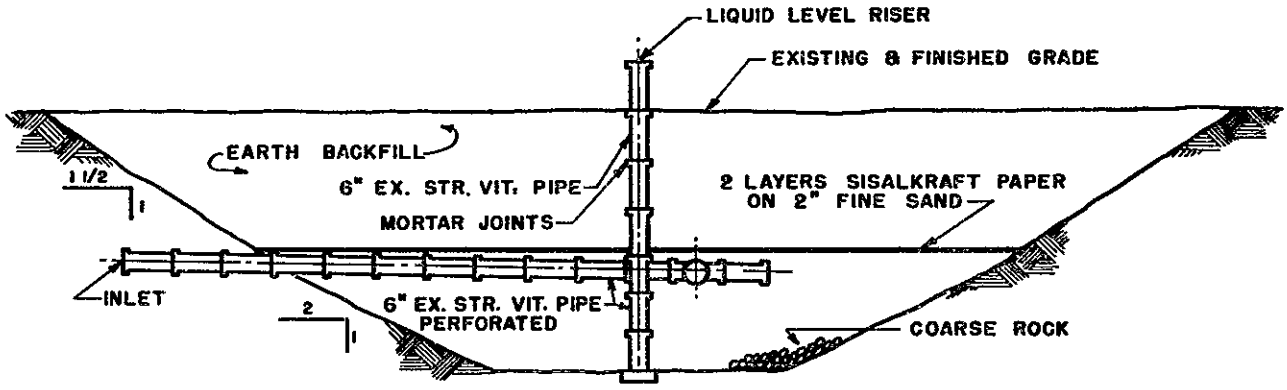

SECTION

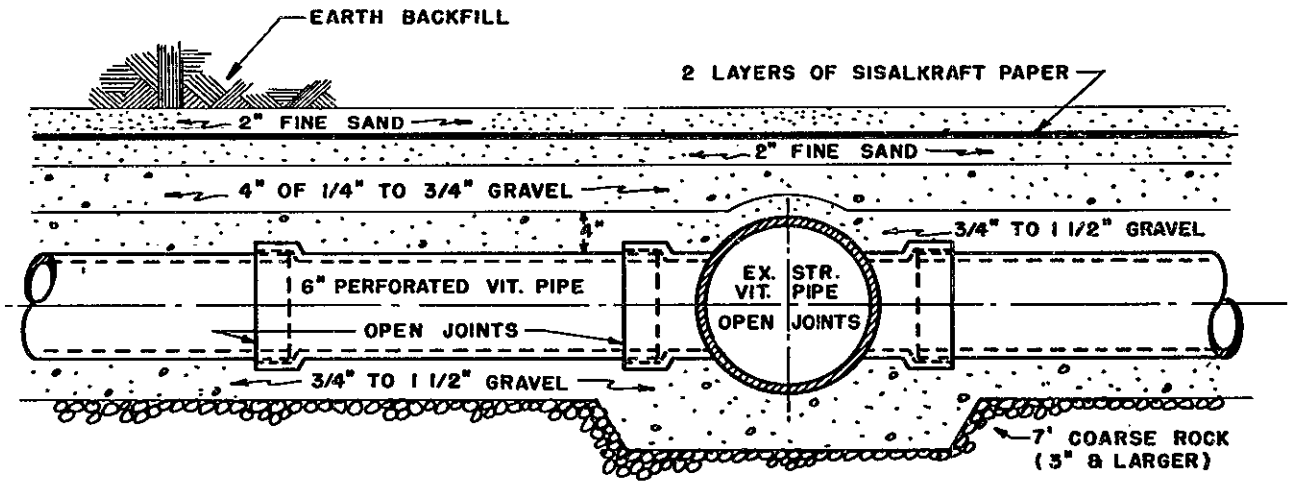

TYPICAL CAVERN DETAIL

FIGURE XI-17

TYPICAL ROCK CAVERN

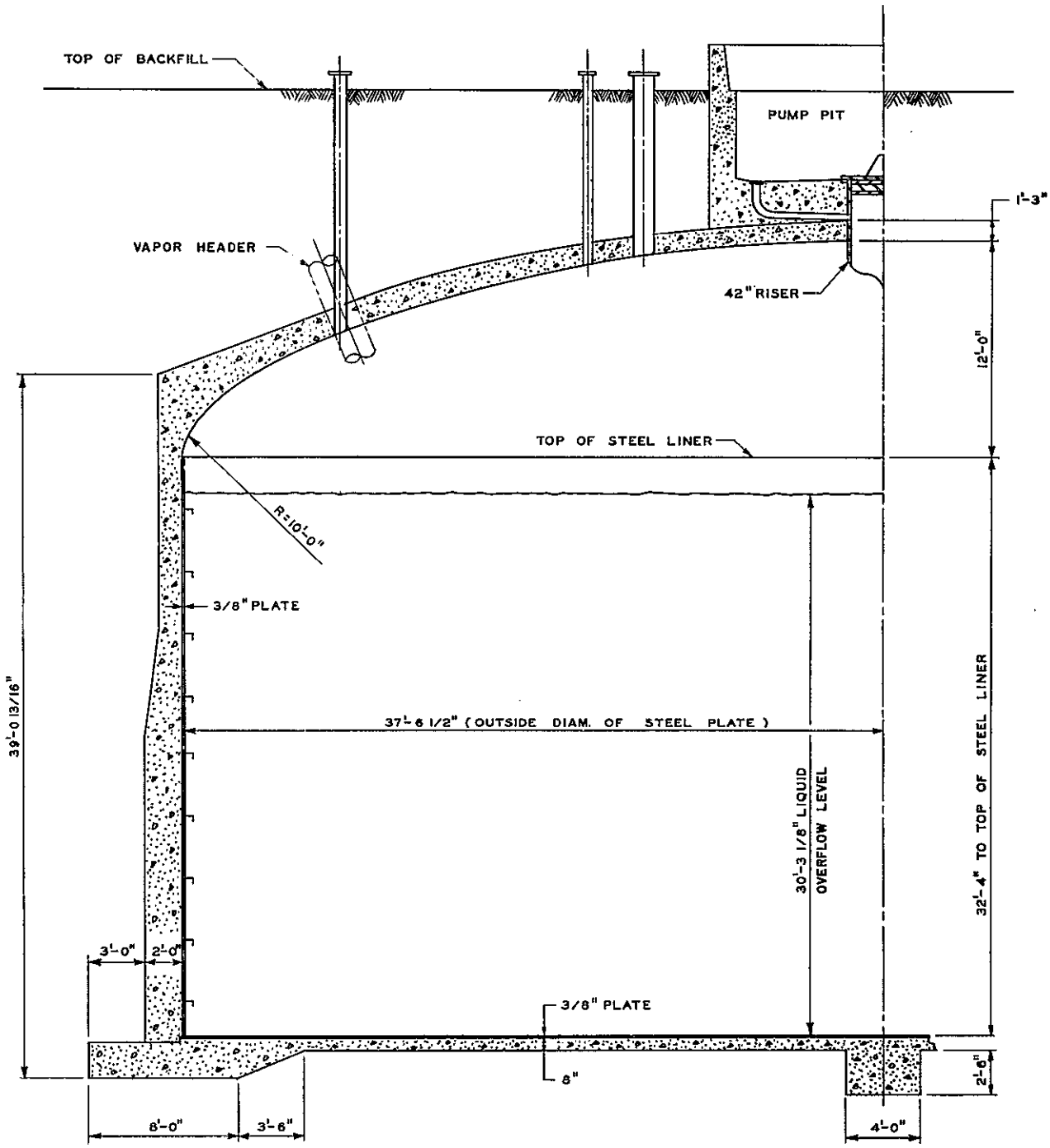

FIGURE XI-19

UNDERGROUND WASTE STORAGE TANK

(FROM H-2-55911)

PART III: PLANT AND EQUIPMENT, continued

CHAPTER XII. PULSE COLUMNS

CONTENTS Page

A. COLUMN DESIGN SPECIFICATIONS 1202
1. General 1202
2. Design Capacity 1203
3. Cascade Arrangement 1203
4. Plate and Packing Design 1203
5. Distributors 1206
6. Disengaging Sections 1206
7. Column Instrumentation 1207
8. Spare Nozzles 1208
9. Overflow Lines 1208
10. Nuclear Safety 1209

B. TYPICAL COLUMN DRAWINGS 1209

C. PULSE GENERATORS 1210
1. Principles and Basis of Design 1210
2. Description 1210
3. Operation and Performance 1213

D. PULSE TRANSMISSION LINES 1213
1. Design Basis 1213
2. Cavitation Calculations 1213
3. Pulse-Leg Dimensions 1215

REFERENCES 1216

LIST OF TABLES AND FIGURES 1217

CHAPTER XII. PULSE COLUMNS

The pulse columns are the heart of the Purex Plant. It is in these solvent-extraction columns that the plutonium and uranium to be recovered are separated from each other and from the fission products. The technical bases of the design specifications and the performance characteristics of the pulse columns are discussed in Chapter V. The purpose of the present chapter is to describe the salient design features of the pulse columns and the associated pulse generators.

A. COLUMN DESIGN SPECIFICATIONS

1. General

The design specifications of the twelve pulse columns of the Purex Plant are summarized in Table XII-1 and Figures XII-1 and XII-2. Simplified drawings of the several pulse columns, discussed in Section B, below, are presented as Figures XII-3 to XII-9. The major dimensions of the columns are as follows:

Column	Over-all Height, Ft.*	Plate (or Packed) Section Internal Diameter, In.	Plate (or Packed) Section Height, Ft.
HA, IA, 2D	33	24 extn. 32 scrub	13.5 extn. 13.2 scrub
HC, IC, 2E	27	34	18.0
IB Extraction	33	27	28.0
IB Scrub	19	8	13.3
2A	40	7	20.9 extn. 9.8 scrub
2B	30	7	21.0
IO, 2O	33	34	26.3

*) From bottom surface of bottom disengaging section to top surface of top disengaging section.

The required pulse conditions involve the use of only two different sizes of fixed-amplitude, variable-frequency pulse generators in the plant: (a) a 485-cu.in.-displacement pulse generator with a frequency range of 35 to 110 cycles/min., and (b) a 44-cu.in.-displacement pulse generator with a frequency range of 25 to 100 cyc./min. The pulse conditions for each of the columns are tabulated below.

Column	Pulse Volume, Cu. In.	Pulse Amplitude, In.	Pulse Frequency, Cyc./Min.
HA, IA, 2D	485	1.1 extn. 0.6 scrub	35 to 110
HC, IC, 2E; IO, 20	485	0.53	35 to 110
IB Extraction	485	0.84	35 to 110
IB Scrub	44	0.84	25 to 100
2A, 2B	44	1.1	25 to 100

2. Design Capacity

The pulse columns were designed for a nominal instantaneous processing rate of ten tons of uranium per day. However, test operation of prototypes or near prototypes of the columns has demonstrated a wide throughput range with good performance, extending at least as low as 3 short tons of uranium per day, and short runs with "cold" uranium indicated the operability of the columns at rates extending as high as 16 to 20 tons of uranium per day (instantaneous rates), although the tests provided no assurance that these high rates can be successfully sustained for long periods in radioactive service.

3. Cascade Arrangement

The columns are placed in the cells to permit gravity flow of product streams from the HA Column to the HC Column, from the IBX Column to the IBS and IC Columns, from the 2A to the 2B, and from the 2D to the 2E Column. The solvent flow leaving the IO and 20 Columns, is in each instance, divided equally by weirs. Each split stream cascades by gravity to two centrifuges, in parallel, for further treatment. The relative elevations of all column tops with respect to one reference plane are listed in Table XII-1. (See third column of table and Note (b)).

4. Plate and Packing Design

The countercurrent flow sections of the several pulse columns are fitted with horizontal sieve plates of two different designs (described under 4.1, below), and in some cases are also equipped with louver-plate redistributors (described under 4.2). One exception is the 2A Column which employs Raschig-ring packing as indicated under 4.3.

4.1 Sieve plates

Stainless-steel perforated plates are employed in all columns in which the aqueous is the continuous phase, i.e., in the HA, IA, IBX, IBS, 2B, and 2D Columns. The plates used have 1/8-in.-diameter holes spaced 1/4 in. apart (center to center) in an equilateral triangular arrangement, giving a free (perforated) area of 23%. The plates are spaced 2 in. apart. As

discussed under 4.2, below, louver plates are employed at selected plate-section locations in conjunction with the stainless-steel sieve-plate cartridges in all of the above-enumerated columns with the exception of the 2B Column.

Perforated plates made of fluorothene* (polytrifluoromonochlorethylene, also designated as Kel-F*), an organic-phase-wetted plastic, are used in all columns in which the organic phase is continuous, with the exception of the 2A Column, in which fluorothene Raschig rings (see 4.3, below) are employed. Thus the HC, IC, 2E, IO, and 2O Columns are provided with fluorothene sieve plates. These contain 3/16-in.-diameter holes on 3/8-inch center-to-center equilateral triangular spacing, giving 23% free (perforated) area. The plates are spaced 4 inches apart.

4.2 Louver plates (redistributors)

Louver-plate phase redistributors are provided at selected locations in the sieve-plate cartridges of the A-type columns (HA, IA, and 2D) and the IBX Column to break up channeling; and in the IBS Column, primarily to stabilize the operation of the column at high throughput rates.

The louver plates each consist of a 1/8-in.-thick stainless-steel disk with variously 4 or 8 rectangular "louvers" opening upward from the disk and oriented so as to impart to the column contents a swirling motion (counterclockwise as seen from above) during the upward phase of the pulse movement in the column. Vertical baffles are placed in front of the louvers on all except the IBS Column louver plates to provide additional agitation. The free area of the louver plates is 13% in the A-type column extraction sections, 16% in the A-type column scrub sections and in the IBX Column, and 20% in the IBS Column. Details of the design of the various louver plates are shown in Figure XII-2. Their positions in the several columns are shown in Figures XII-3, 5, and 6.

4.3 Packing

The 2A Column is packed with 1-in.-diameter by 1-in.-long fluorothene Raschig rings. Each ring is a cylinder with a continuous (not split) wall approximately 1/16 in. thick. A one-foot-high packing-free section is provided for the introduction of the 2AF stream, but the two intermediate scrub inlets in the scrub section discharge directly into the packing.

This application of a pulsed packed column is the first in a H.A.P.O. production plant and was specified because of its demonstrated superiority over all plate cartridge geometries tested for the 2A Column.

---

*) "Fluorothene" and "Kel-F", while actually manufacturers' trade names, are used here, interchangeably, as convenient colloquial terms designating polytrifluoromonochlorethylene plastic regardless of make.

The packing supports and hold-down grates are of a conventional grid-type design with 80% free area (approximately the free area of the packing). Saw-tooth indentations on the grids, oriented towards the packing (i.e., upward on the supports, downward on the hold-down grids), are designed to help prevent "blinding" of the grids by the Raschig rings. Details of these supports are included in Figure XII-7.

4.4 Cartridge construction

The stainless-steel sieve and louver plates are supported by 7/16-in.-diameter rods connected at the top and bottom of the cartridge to support "spiders". Sections of 3/8-in. Schedule 40 pipe slipped over the rods are used to hold the plates apart. The fluorothene plates of the C-type and O-type columns are supported similarly with 1/2-in. rods and 1/2-in. Schedule 80 pipe spacers. With this type of construction the plate bundles may be removed from the column for replacement or modification by removing the top flange of the column (a contact-maintenance operation) and cutting off hold-down lugs welded to the shell above the top support spider. To remove the scrub-section plate cartridges from the dual-purpose (A-type) columns it is also necessary to remove the intermediate scrub distributors. Removal of the extraction-section cartridges of these columns requires cutting the column shell below the feed distributor.

The following table gives the spacing and the number of tie rods for all plate cartridges:

Column	No. of Tie Rods	Circle Diameter, In.	No. of Tie Rods on Circle	No. of Tie Rods Connected to Support Spider
HA, IA, 2D extn. section	13	0	1	1
		12	4	4
		21	8	4
HA, IA, 2D scrub section	21	0	1	1
		14	4	4
		23	8	0
		29	8	4
HC, IC, 2E; IO, 2O	49	0	1	1
		10	8	8
		20	16	8
		30	24	8
IBX	21	0	1	1
		12	4	4
		19	8	0
		24	8	4
IBS	3	6	3	3
2B	3	5	3	3

5. Distributors

The influent-stream distributors, shown in Figure XII-1, are designed to provide reasonably uniform phase distribution across the column cross section without unnecessary complexity of design. The numbers and sizes of discharge holes or nozzles are such as to result in discharge velocities (typically in the neighborhood of 0.8 ft./sec. at 10 tons U/day) which are sufficiently high to cause some mixing and hence good distribution of the influent stream, yet not high enough to promote flooding in the column due to excessive turbulence. Pipe sizes for the approaches to the discharge outlets are such that the flow velocities in the approach pipes are only about 10 to 20% of the discharge velocities, so as to insure uniform flow rates from the several discharge holes or nozzles.

The intermediate feed distributors for the A-type columns (i.e., the HAF, IAF, and 2DF distributors) employ four nozzles with a tangential orientation, sized for a relatively high discharge velocity (about 2 ft./sec. at 10 tons U/day), to provide good mixing and blending of the incoming aqueous feed solution with the aqueous spent-scrub solution in the column. While such jet-mixer-type distributors are not used at the intermediate scrub introduction points in the HA, IA, and 2D Columns, a similar function is accomplished by the louver plates located just below these inlets.

The design of the external ring-type distributors for the IBS stream and for all influent streams to the 2A and 2B Columns was influenced by the nuclear safety considerations discussed in Chapter XXIII.

6. Disengaging Sections

Phase-disengaging sections of all columns were designed to provide at least 7 minutes (generally 10 or more minutes) holdup time for the phases leaving the column at an instantaneous processing rate of 10 short tons U/day. The designs of the disengaging sections are indicated in Figures XII-3 to XII-9.

Where no safe-geometry criticality control is involved (i.e., in conjunction with the HA, HC, IA, IBX, 2D, 2E, IO, and 2O Columns and the top of the IBS Column) rectangular box-type top disengaging sections and vertical or near-horizontal cylindrical bottom disengaging sections are used. A liquid depth of at least two feet is provided for good disengagement. The enlargement of the cross-sectional area in the disengaging sections over that of the adjacent plate sections permits the needed disengaging volume to be provided with a minimum expenditure of cell height, and also results in a pulse amplitude which is sufficiently decreased from the plate-section amplitude not to inhibit disengagement. The cylindrical bottom end designs combine fairly simple types of construction with mechanical strength to withstand the working pressures. The relative rigidity of the cylindrical bottom end sections minimizes wall flexing ("breathing"), and hence distortion of the transmitted pulse, as a result of pressure variations due to pulsing. The ceilings of the bottom end sections are sloped to prevent the accumulation of air bubbles, which would partially absorb or augment the pulse.

Three-inch-deep, near-horizontal, slab-shaped ("beaver-tail") disengaging sections are provided for the 2A and 2B Columns and for the bottom of the IBS Column. The slab design is used to provide the necessary disengagement volume in a section geometrically safe from a slow-neutron chain reaction. (The principles of safe-geometry design are discussed in Chapter XXIII.)

The following table lists the volumes and holdup times for all disengaging sections. The holdup times are based on an instantaneous flow rate of 10 tons U/day using the Purex HW #3 Flowsheet.

Disengaging Section	Volume,* Gal.	Flow Rate of Disengaged Stream, Gal./Min.	Holdup Time, Min.
HA, IA, 2D top	220	19.6	11
HA, IA, 2D bottom	108	8.1	13
HC, 2E top	223	19.0	12
IC top	223	22.8	10
HC, IC, 2E bottom	513	35.1	15
IBX top	165	23.5	7
IBX bottom	45	1.7	27
IBS top	41	3.2	13
IBS bottom	24	1.6	15
2A top	18	0.7	24
2A bottom	24	3.4	7
2B top	14	0.7	19
2B bottom	12	0.4	31
IO top	397	41.7	10
IO bottom	305	13.9	22
20 top	397	19.0	21
20 bottom	305	19.0	16

*) Effluent-phase volume, taken (a) for disengaging sections opposite the interface, as the volume between the nearest influent distributor and the column outlet; and (b) for interface-end sections, as the volume from the mid-point between the interface diptubes to the column outlet.

7. Column Instrumentation

Interface position and static pressure are determined for all columns, and specific gravity of the effluent stream leaving at the interface end of the column is determined for all except the 2A and 2B Columns. The IO and 20 Columns also contain liquid-level or pressure alarms at the top of the columns, to detect incipient loss of solvent to the vent system. Air-purged dip tubes are used as the sensing elements for all measurements, except the bottom interface position in the 2A Column.(7) A capacitance probe inserted in a special interface chamber (shown in Figure XII-7), designed to render the probe replaceable by remote-maintenance methods,

is used as the interface-sensing device for the 2A Column when operating normally with the organic phase continuous[3]. Spare air-purged dip tubes are installed (though not connected) (a) in the top disengaging section, to provide for possible future top-interface operation of the 2A Column; and also (b) in the bottom disengaging section, as a potential alternate interface-position sensing device. The interface, specific gravity, and pressure alarm dip tubes for all but the 2A and 2B Columns are installed by removable pipe "jumpers". The 2A and 2B Column interface dip tubes are permanently installed. The following table indicates the dip tube spacings.

Column	Dip Tube Spacing, In. Interface	Specific Gravity
HA, HC, IA, IBX, IC, 2D, 2E	12	12
IBS	10	10
2A	8[a] (top), 10[b] (bottom)	--
2B	8	--
IO, 20	12	10

Notes: (a) A third dip tube, terminating at an elevation midway between the two interface tubes, is installed as a spare.

(b) Effective height of sensing element (capacitance probe).

Descriptions of the column instrumentation will be found in Chapter XVII. The functions of the column instruments and their use in detecting off-standard conditions are discussed in Chapter VI.

8. Spare Nozzles

The bottom (aqueous) outlet of each column is spared to permit continued operation if the normal outlet should become plugged or otherwise inoperable. Steam jets are connected to these spare lines to permit emptying the column.

Spare nozzles (or permanently installed 1/2-in. lines) are placed on top of the top disengaging sections of all columns. The suction leg of a steam jet is installed in the spare top nozzles of the HA, IA, 2D, and IBX Columns to permit jet-out of any excessive "crud" which may gather at the interface. The spare nozzles or lines of the other columns may be piped similarly if desired.

9. Overflow Lines

The diameters of the organic overflow lines are 8 in. for the large-diameter (24-in. to 34-in.) columns and 3 in. for the small-diameter (7 and 8-in.) columns to minimize aspiration of air into the overflow line. The overflow lines for the 2A and 2B Columns are also connected to the vent system. (The other columns are vented directly from the top disengaging section, through a separate nozzle.) Two overflow lines are provided for the IO and 20 Columns with the flow divided equally by rectangular weirs. The flow may thus be directed to two centrifuges in parallel, though normally only one centrifuge need be used for the 20 organic effluent.

10. Nuclear Safety

The 7-in.-diameter 2A and 2B Columns are designed with a geometry such that a slow-neutron chain reaction cannot be sustained in them regardless of the composition of the solutions which they may contain.

The 8-in.-diameter IB Scrub Column is safe against a slow-neutron chain reaction by virtue of its geometry for any plutonium concentration up to at least 85 grams/liter, i.e., approximately 150-fold the normal flowsheet concentration of plutonium in the IB Scrub Column. Considerations of any possible off-standard operating conditions which would result in such a drastic accumulation of plutonium in the IB Scrub Column leads to the conclusion that such an occurrence is extremely unlikely and would be detected long before the potentially unsafe concentrations of over 85 g./l. are approached.

In all other columns a nuclear chain reaction is prevented by the extreme dilution of the plutonium and also by the co-presence of sufficiently high concentrations of uranium (U-238).

For a further discussion of nuclear safety considerations, reference is made to Chapter XXIII.

B. TYPICAL COLUMN DRAWINGS

Typical columns are shown in Figures XII-3 through XII-9. The A-type columns (HA, IA, 2D) are identical in construction, as are the C-type columns (HC, IC, 2E). The 20 Column differs from the IO Column only in having contact-maintenance flanges rather than remote-maintenance connector nozzles and flanges (and in having somewhat longer nozzles to facilitate manual access to the flange bolts).

These drawings show the basic geometry of the columns and the exact positions of the column nozzles. Details such as column bracing, supports, nozzle kick-plates, etc. are either omitted or simplified to permit clarification of the salient dimensions which are of process importance. The sketch of a typical column support is shown in Figure XII-10.

The columns were constructed according to the specifications for Class I vessels (see Chapter XIII). The material of construction is Type 304 L stainless steel, with welds made with Type 347 stainless-steel welding rod. The wall thickness of the column shells is 1/4 in.; that of the disengaging sections ranges from 1/4 and 3/8 in. for the cylindrical and slab-type disengaging sections to 1/2 in. for the box-type disengaging sections. All pipes are Schedule 40S except the 8-in. and 12-in. pipes which are Schedule 10S. Standard Hanford 2-in., 3-in., 4-in., and 2-in. 3-way connector nozzles are used for all pipe connections with the exception of the 2-in., 3-in., and 4-in. pipes of the 20 Column, which use

standard welding-neck flanges, and the 12-in. pulse legs which use a special remote-maintenance flange. (Remote-maintenance features are discussed in Chapter XV.)

C. PULSE GENERATORS

The pulse generators for the solvent-extraction columns are reciprocating piston mechanisms. Mechanical drive components reciprocate the piston at a fixed amplitude and frequencies which can be varied to suit process requirements. The pulse is transmitted to the column through a "pulse leg" - a pipeline, filled with essentially stagnant liquid, which connects the pulse generator to the bottom of the column. Figure XII-11 shows the relative location of a column and its pulse generator.

1. Principles and Basis of Design

Process requirements for the pulse generators are summarized in Table XII-1. The pulse volume for the IB Scrub, 2A, and 2B Columns is 44 cu.in.; the pulse frequency is adjustable to any value within the range of 25 to 100 cycles/min. Pulse volume and frequency range for the remaining nine columns are 485 cu.in. and 35 to 110 cycles/min. The maximum theoretical hydraulic horsepower of the pulse generators varies from 7.2 hp. for the larger columns to 0.26 hp. for the IB Scrub Column.

In addition to the process requirements stated above, three major mechanical considerations guide pulse generator design:

(a) Reliability in remote operation: The reciprocating piston and its driving components which comprise the pulse generator must be time-proven machine elements offering maximum service life with minimum development effort.

(b) Variable pulse amplitude-frequency product: Process requirements for a variable pulse amplitude-frequency product are met by operating the pulse generator piston at a fixed stroke over the frequency ranges shown in Table XII-1. This results in a simpler and cheaper design than would result from variable stroke.

(c) Piston leakage: Piston leakage rates must be low and must be contained in the system for satisfactory operation of the pulse generator. Excessive leakage would pose a disposal problem. Also, if leakage were a large fraction of stream flows or pulse volume and then were to vary with time the result could affect process performance.

2. Description[8]

The pulse generator designed from the above considerations is a piston reciprocated by a variable-speed electric motor acting through reduction gears and a conventional crank arrangement as shown in Figure XII-12. Nine large pulse generators (designated Size 2) have cylinder bores and piston strokes of 21.2 in. and 1-3/8 in. Three small pulse generators

(designated Size 1) are used on the IB Scrub, 2A, and 2B Columns. They are scaled-down models which have cylinder bores of 7.5 in. and piston strokes of 1 in.

For convenience, the pulse generator is considered as consisting of three major sub-assemblies: the piston and cylinder, the motion box, and the power supply system.

2.1 Piston and cylinder assembly

The piston, which pulses the liquid, is a cup-shaped, stainless-steel casting, machined to diameter to provide clearance in the cylinder. Two Graphitar No. 41 rider rings guide the piston during reciprocation. Each rider ring consists of 16 segments (eight segments for Size 1), each 1-5/8 in. thick, which are butted together, rigidly clamped to the piston, and machined for close clearance with the cylinder bore.

Four expanding-type Graphitar No.41 piston rings seal against fluid leakage past the piston. For each 7/8-in.-wide ring, six equal segments (three segments for Size 1) are fitted together by step-type lap joints to form a circle. Expanders behind each piston ring force the ring segments against the cylinder wall with pressures varying from 1/2 to 2 lb./sq.in. Each expander is made up of 12 stainless-steel ring segments, butt-jointed for circular assembly. The ends of each segment are drilled for helical compression springs, which force the segments outward. The piston ring expander for the small pulse generator is a helical compression spring lying behind the piston ring.

The lower face of the piston is flat and drilled through (3/32-in.-diameter hole) to prevent formation of air pockets and to vent the pulse leg. Liquid which jets through the vent hole is blocked by the splash guard. The stainless-steel piston rod extends upwards through the piston for connection to the upper horizontal piston-rod yoke.

The cylinder is a stainless-steel welded assembly bored and honed to diameter. The lower and upper flange faces mate with the cast stainless-steel cylinder support and the cylinder cover, respectively. The cylinder support is integral with the pulse-leg transition pipe. A flanged nozzle welded to the cylinder barrel overflows piston leakage to appropriate process vessels. Centered in the cylinder cover, the Graphitar No. 41 vapor-seal bushing restricts vapor and liquid leakage from the cylinder. Integral with the cylinder cover, and diametrically opposite, are two drilled housings for the yoke spacer-bar guide bushings. Upper and lower bronze bushings are pressed into each housing. Two shaft seals in each housing retain grease and exclude foreign matter.

2.2 Motion box

The motion box reduces drive-motor speed, translates rotary to reciprocating motion, and transmits the reciprocation to the piston. Its principal components are the drive motor, the speed-reduction and motion-translation system, and the lubrication system.

The variable-speed, flange-mounted drive motor is a General Electric Co. gear-motor, Frame No. K326C641, rated at 15 hp., 190-r.p.m. output speed with 440-volt, 3-phase, 60-cycle power supply (2 hp., 280-r.p.m. output for Size 1).

The speed-reduction and motion-translation system, enclosed in the cast Mehanite drive housing, reduces the rotary output speed of the gear-motor shaft and converts this rotation to reciprocation. Speed reduction gears consist of a 34-tooth (21 teeth for Size 1) single-helical pinion, attached to the tapered gear-motor shaft, and a mating 57-tooth gear attached to the crankshaft. Double-spherical roller bearings (double-row ball bearings for Size 1), retained on the shaft by lock nuts and tapered sleeves, support the crankshaft load. The drive-end (inboard) bearing is fixed in its housing to maintain gear alignment; the outboard bearing is free to slide axially in its housing for compensation of shaft thermal expansion.

The crank for motion translation is a turned eccentric shoulder integral with the crankshaft. The shoulder eccentricity with the shaft is 1/2 in. for the small, 11/16 in. for the large units. The crank bearing, mounted on the eccentric shoulder, is a double-row spherical roller bearing (ball bearing for Size 1). The connecting rod, which links the rotating crankshaft to the reciprocating crosshead yoke, is counterbored at its upper end to house the crank bearing and bronze-bushed at its lower end for connection to the crosshead yoke. The connection is made by the eccentric pin through the connecting-rod bushing. The pin ends are retained by the two horizontal yoke bars, which are bolted to the crosshead yoke. Movement of the yoke is restricted to linear vertical motion by the lower guide pin and the upper yoke rod. Thus, the rotation of the crankshaft generates the reciprocation of the yoke through the connecting-rod link.

The upper and lower horizontal yokes are connected by the parallel yoke-spacer bars outside the drive housing, to transmit reciprocation to the piston. The linear bearings for the crosshead-yoke guide pin and upper rod are bronze bushings.

Lubrication: Moving parts enclosed in the motion-box drive housing are principally oil-bath lubricated. The upper oil level in the drive housing, maintained by remote filling, is fixed by the overflow connection to an external waste-oil tank. A separate oil bath in the gear-motor housing overflows to the drive housing.

Oil is force-fed to the upper yoke-rod guide bushing by the crankshaft-driven pump. The pump discharge connects to an annulus above the bushing, from which the oil gravity-feeds along the rod for bushing lubrication. Excess oil is returned to the reservoir by ports drilled in the upper crosshead-yoke rod.

2.3 Power supply

The power supply system (not shown) delivers variable-frequency A.C. power to the variable-speed drive motors. Principle components, located in the "cold" zone, are A.C. motor-generator sets, one for each pulse generator, and two D.C. motor-generator sets for A.C. generator field excitation.

The A.C. motor-generator sets consist of the following mounted on a common bedplate: a Fairbanks-Morse constant-speed induction motor (25-hp., 1200-r.p.m., 3-phase, 60-cycle, 440-volt rating for Size 2; 5 hp. for Size 1) driving a Fairbanks-Morse A.C. generator (18.7 kva., 0.8 p.f., 3-phase, 60-cycle, 480-volt output at 1800 r.p.m. for Size 2, 3.75 kva. for Size 1) through a Link-Belt variable-speed mechanical drive. The Link-Belt drives have manually controllable no-load speed outputs of 1850 to 560 r.p.m. for Size 2 and 1850 to 412 r.p.m. for Size 1.

Three-phase power leads electrically interconnect the pulse-generator drive motor and the corresponding A.C. generator output. Drive-motor speed is proportional to supplied-power frequency; thus, variable pulse-frequency control is obtained from manual control of the Link-Belt unit output speed.

The A.C. generators require field excitation by an external source of D.C. power. Two bedplate-mounted units for this service each consist of a D.C. generator, rated for 5 kw. at 1200 r.p.m. and 120 volts, direct-coupled to a 7.5-hp., 3-phase, 60-cycle, 440-volt induction motor.

3. Operation and Performance

Pulse-generator operation, by factory acceptance test(2), satisfied process requirements for variable pulse frequency and for pulse volume. Piston leakage rates (11 ft. of static head at the piston, test solution of water plus soluble oil) were in the 0.6 to 0.3-gal./min.* range, to compare with the 0.5-gal./min. rates predicted by calculation. Input horsepower to the large pulse generator under test was 2.5 at 110 cycles/min.

The piston rings are dependent upon liquid in the pulse leg for lubrication. Time should be allowed for pulse-leg filling before startup of the pulse generator.

D. PULSE TRANSMISSION LINES

1. Design Basis

The pulse is transmitted from the pulse-generator piston to the bottom of the column through the liquid in the pulse transmission line or "pulse leg". This pulse leg must be of sufficient height to balance most of the hydrostatic head of liquid in the column to minimize the volume of process solution leaking past and through the pulse piston, and to permit this leakage to flow by gravity to the proper receiver.

The diameter of the pulse leg must be sized to prevent cavitation.

2. Cavitation Calculations

Cavitation in a liquid system is the formation and collapse of vapor pockets as localized pressures become in turn less or greater than the vapor pressure of the liquid. Cavitation is accompanied by shock pressures, as the bubbles collapse, which may be damaging to mechanical elements in

---

*) At the time of writing plugging of the 2B Column pulse-generator piston weep hole, to reduce the pulse leakage for that column, was under consideration.

the system. In addition, it is probable that cavitation would produce erratic liquid displacement-vs.-time characteristics which would have a deleterious effect on the extraction efficiency and/or capacity of a column.

To avoid these effects, the minimum pressure in a pulse system must at all times exceed the vapor pressure of the pulsed liquid. This requirement determines the minimum pulse-leg diameter and maximum pulse-leg height since the minimum pressure decreases with decreased diameter or increased height.

2.1 Pressure effects

The total pressure in a pulse-column system is largely the sum of three pressure effects: static pressure, velocity pressure, and acceleration pressure.[4] Acceleration pressure is proportional to the product of fluid-particle acceleration and fluid mass. Velocity pressure occurs as a pressure drop across the column due to frictional (packed column) or orifice effects (perforated-plate columns) associated with fluid-particle velocity.

Since the liquid displacement-vs.-time curve for the Purex pulse columns is approximately sinusoidal, velocity and acceleration are 90 degrees out of phase. Therefore, acceleration pressure and pressure drop through the packing are also 90 degrees out of phase, one being zero when the other is at a maximum or minimum.

2.2 Acceleration pressure

The acceleration pressure P_a, lb./sq.in., in a sinusoidally pulsed system[4] is given by

$$P_a = \frac{-7.83}{10^6} \left[\frac{kL\rho f^2}{D^2}\right] \sin \theta,$$

where

D = pipe diameter, in.;

k = pulse volume, cu.in.;

l = pipe length, ft.;

ρ = liquid specific gravity;

f = pulse frequency, cycles/min.;

θ = pulse-cycle phase angle.

To determine the acceleration pressure at any point in a pulsed system, the values of P_a for all sections of the system between the point and the top of the column are added. The greatest acceleration pressure occurs at the face of the pulse-generator piston.

2.3 Pressure drop through the column

Pressure drop through the column is a function of flow rate. The net (unpulsed) flow through the column is small compared with maximum flow associated with the pulse velocity and may therefore be neglected.

The pressure drop in perforated-plate columns is given by

$$P_c = \frac{1.285}{10^7}\left[\frac{Nk^2f^2\rho(1-V^2)}{C^2A_h{}^2}\right]\cos^2\theta,$$

where P_c = pressure drop through the column, lb./sq.in.;

N = number of plates;

k = 1/2-cycle pulse volume, cu.in.;

f = pulse frequency, cyc./min.;

ρ = liquid specific gravity;

V = fraction of plate free area;

C = orifice coefficient;

A_h = plate free area, sq.in.;

θ = pulse-cycle phase angle.

The pressure drop through Raschig-ring packing is usually negligible. An empirical relationship for its calculation is given in Perry's Handbook.(1)

3. Pulse-Leg Dimensions

The large-diameter (24 to 34 in.) pulse columns have 12-inch-diameter pulse legs 15.5 or 17.5 feet high. The small-diameter (7 and 8-in.) columns have 4-inch diameter pulse legs from 10 to 18 feet high.

Pulse-leg dimensions for all Purex columns are listed in Table XII-1.

REFERENCES

(1) J. H. Perry, Chemical Engineers' Handbook, 3rd edition, McGraw-Hill Book Co., Pp. 393-395, (1950).

(2) P. B. McCarthy, Letter to File: Report of Visit to Stearns-Rogers Mfg. Co., Denver, Colo. to Witness Acceptance Test of the First Large Pulse Generator. H.A.P.O. 4-20-54.

(3) R. E. Smith, Letter to W. B. Webster: Purex 2A Column Interface Control Component Specifications. H.A.P.O. 6-9-54.

(4) HW-20305 Design Considerations for a Pulse Column. V. R. Cooper and C. Groot. 3-9-50.

(5) HW-29688 Revised Specifications of Purex-Plant Solvent-Extraction Columns Excluding IBS, 2A, and 2B. R. E. Smith. 10-20-53.

(6) HW-30109 Revised Specifications for Purex-Plant IB Scrub, 2A, and 2B Columns. R. E. Smith. 12-1-53.

(7) HW-30403 Specifications for Interface Control to be Used on Purex Solvent-Extraction Columns Excluding 2A. R. E. Smith. 12-23-53.

(8) BPF-7335 Purex Pulse Generators.

(9) BPF-8111 Purex IBX Column.

(10) BPF-8405 Purex Pulse Columns Excluding IBX Column.

LIST OF TABLES AND FIGURES

TABLE XII-1 SPECIFICATIONS FOR PUREX-PLANT PULSE COLUMNS

FIGURE XII-1 INFLUENT-STREAM DISTRIBUTORS

FIGURE XII-2 LOUVER PLATES

FIGURE XII-3 HA COLUMN

FIGURE XII-4 HC COLUMN

FIGURE XII-5 IBX COLUMN

FIGURE XII-6 IBS COLUMN

FIGURE XII-7 2A COLUMN

FIGURE XII-8 2B COLUMN

FIGURE XII-9 IO COLUMN

FIGURE XII-10 TYPICAL COLUMN SUPPORT (HC COLUMN)

FIGURE XII-11 HC COLUMN WITH PULSE SYSTEM

FIGURE XII-12 PULSE GENERATOR

[redacted]

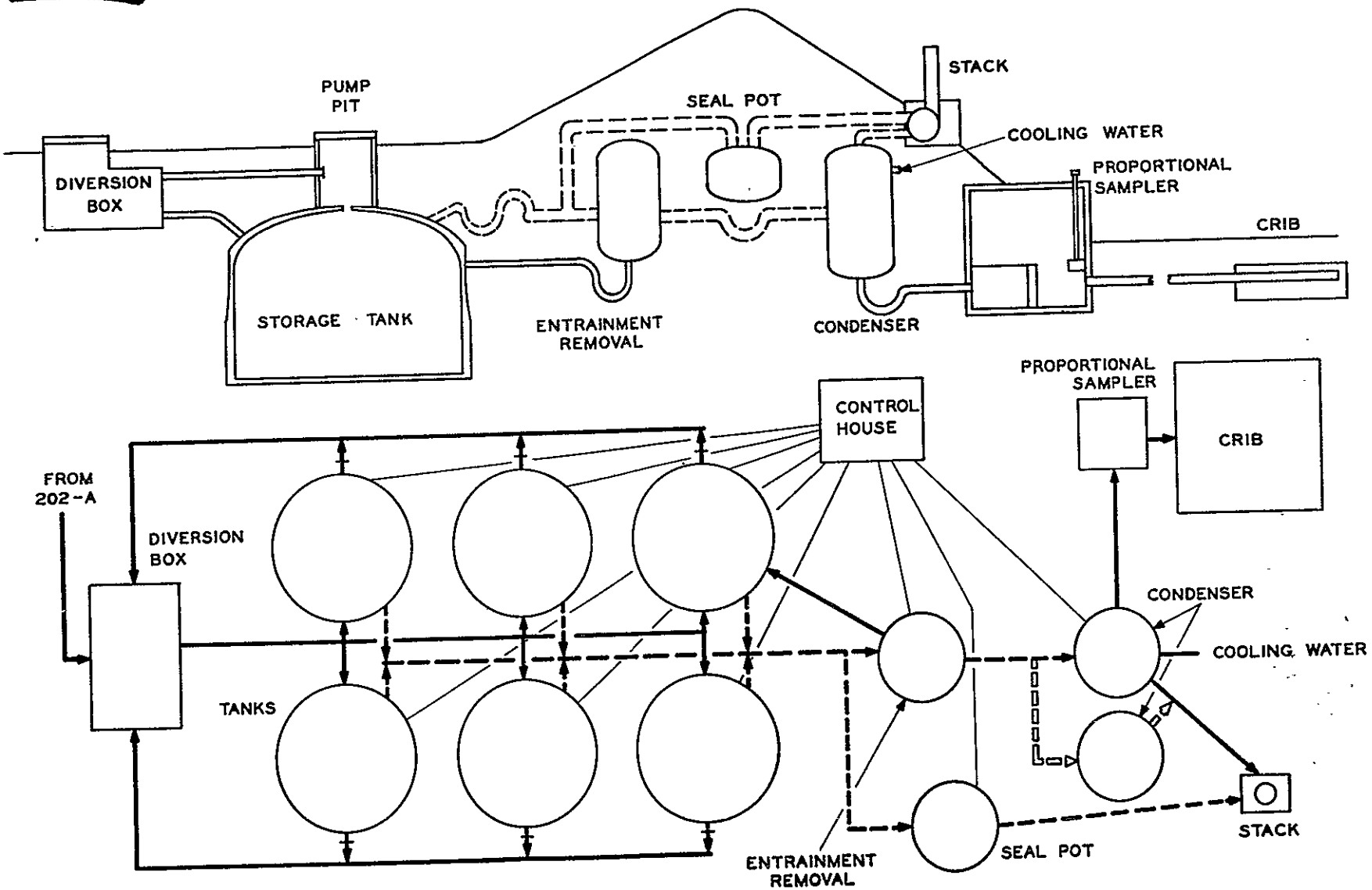

LEGEND:

VAPOR LINES

LIQUID LINES

ALTERNATE LINE

FIGURE XI-18

SIMPLIFIED FLOW SKETCH

241-A WASTE FACILITY

[redacted]

TABLE XII-1

SPECIFICATIONS FOR PUREX PLANT PULSE COLUMNS

Basis: Purex HW #3 Flowsheet and an Instantaneous Processing Rate of 10 Short Tons U/Day

-Plate cking pe	Louver-Plate Design, Fig. No.	Pulse Amplitude, Inches[d]	Pulse Volume, Cu.In.[d]	Pulse Frequency Range, Cyc./Min.	Pulse Leg Diameter, Inches	Pulse Piston Height, Ft.[e]	Maximum Theoretical Horsepower Required	Maximum Pressure on Piston, Lb./Sq.In.(Ga.)	Pulsed Phase	Continuous Phase	Volume Velocity, Gal./(Hr.)(Sq.Ft.), Sum of Both Phases[f]	H.T.U., Ft.[g]	Number of Transfer Units Required for 0.1% U or Pu Loss
h)	2a(Extr.) 2b(Scrub)	1.1(Extr.) 0.6(Scrub)	485	35 to 110	12	17.5	7.2	18	Organic	Aqueous	530(Extr.) 240(Scrub)	0.7 to 1.2(Extr.)	7.0 for U (Extr.) 7.2 for Pu(Extr.)
i)	—	0.53	485	35 to 110	12	15.5	2.8	11	Aqueous	Organic	510	0.8 to 1.4	7.7 for U 7.2 for Pu
i)	2a(Extr.) 2b(Scrub)	1.1(Extr.) 0.6(Scrub)	485	35 to 110	12	17.5	7.2	18	Organic	Aqueous	530(Extr.) 240(Scrub)	0.7 to 1.2(Extr.)	7.0 for U (Extr.) 7.2 for Pu(Extr.)
a)	2c	0.84	485	35 to 110	12	15.5	6.7	18	Organic	Aqueous	380	1.8 to 2.7	10.0[k]
h)	2d	0.84	44	25 to 100	4	10	0.26	9	Aqueous	Aqueous	820	0.8 to 1.3	10.0[l]
i)	—	0.53	485	35 to 110	12	15.5	2.8	11	Aqueous	Organic	550	0.8 to 1.4	8.1
j)	—	1.1	44	25 to 100	4	16	0.54	18	Aqueous	Organic	920(Extr.) 250(Scrub)	1.3 to 2.2(Extr.)	8.1(Extr.)
h)	—	1.1	44	25 to 100	4	18	0.49	15	Aqueous	Aqueous	250	1.2 to 2.0	7.1
h)	2a(Extr.) 2b(Scrub)	1.1(Extr.) 0.6(Scrub)	485	35 to 110	12	17.5	7.2	18	Organic	Aqueous	530(Extr.) 240(Scrub)	0.7 to 1.2(Extr.)	7.0
i)	—	0.53	485	35 to 110	12	15.5	2.8	11	Aqueous	Organic	510	0.8 to 1.4	7.7
i)	—	0.53	485	35 to 110	12	15.5	3.6	12	Aqueous	Organic	530	—	—
i)	—	0.53	485	35 to 110	12	15.5	3.6	12	Aqueous	Organic	360	—	—

een the bottom surface of the bottom disengaging section and the top surface of the top disengaging section.

een the bottom column support pad (elevation 674 ft. 4-1/4 in.) and the top surface of the top disengaging section.

height is the distance from the bottom plate to the top plate and does not include top and bottom supports of cartridges. The packed height umn is the distance between sawteeth of the packing support and hold-down grates.

one extreme position to the other.

the bottom of the lower disengaging section to the lower face of the piston with the piston at the bottom of the stroke.

uent-stream volumes.

ge of H.T.U. values for plant-size columns at optimum pulse frequency at processing rates corresponding to about 3 to 20 tons U/day. The the required number of transfer units are stated on an over-all aqueous-film basis for transfer from the aqueous phase and on an over-all basis for transfer from the organic phase.

el plates (1/16 to 3/32-in. thick) with 1/8-in. perforations on 1/4-in. equilateral-triangle centers giving 23% free area, spaced 2 in. apart. are inserted in the cartridges of the HA, IA, IEX, IBS, and 2D Columns as indicated in the figures.

lates (1/8-in. thick) with 3/16-in. perforations on 3/8-in. equilateral-triangle centers giving 23% free area, spaced 4 in. apart.

aschig rings, 1-in.-diameter by 1-in.-long with continuous 1/16-in. thick wall.

rtonium organic/aqueous distribution ratio of 0.02.

nsfer units required to reduce uranium concentration in IEP to 0.1% in Pu at 520 g.Pu/ton U in HAF (5.8×10^{-5}% U loss, based on U in HAF).

[redacted]

[redacted]

TABLE XII-1

SPECIFICATIONS FOR PUREX-PLANT PULSE COLUMNS

Basis: Purex HW #3 Flowsheet and an Instantaneous Processing Rate of 10 Short Tons U/Day

Column	Over-all Height, Ft. Net[a]	Over-all Height, Ft. Gross[b]	Plate or Packed Section Height, Ft.[c]	Plate or Packed Section I.D., In.	Sieve-Plate or Packing Type	Louver-Plate Design, Fig. No.	Pulse Amplitude, Inches[d]	Pulse Volume, Cu.In.[d]	Pulse Frequency Range, Cyc./Min.	Pulse Leg Diameter, Inches	Pulse Piston Height, Ft.[e]	Maximum Theoretical Horsepower Required	Maximum Pressure on Piston, Lb./Sq.In.(Ga.)	Pulsed Phase	Cont. Ph
HA	33	33.65	13.5(Extr.) 13.2(Scrub)	24(Extr.) 32(Scrub)	(h)	2a(Extr.) 2b(Scrub)	1.1(Extr.) 0.6(Scrub)	485	35 to 110	12	17.5	7.2	18	Organic	Aqu
HC	27	27.65	18.0	34	(i)	—	0.53	485	35 to 110	12	15.5	2.8	11	Aqueous	Or
IA	33	33.65	13.5(Extr.) 13.2(Scrub)	24(Extr.) 32(Scrub)	(h)	2a(Extr.) 2b(Scrub)	1.1(Extr.) 0.6(Scrub)	485	35 to 110	12	17.5	7.2	18	Organic	Aqu
IBX	33	33.65	28.0	27	(h)	2c	0.84	485	35 to 110	12	15.5	6.7	18	Organic	Aqu
IBS	19	20.65	13.3	8	(h)	2d	0.84	44	25 to 100	4	10	0.26	9	Aqueous	Aqu
IC	27	27.65	18.0	34	(i)	—	0.53	485	35 to 110	12	15.5	2.8	11	Aqueous	Or
2A	40	41.65	20.9(Extr.) 9.8(Scrub)	7	(j)	—	1.1	44	25 to 100	4	16	0.54	18	Aqueous	Or
2B	30	33.65	21.0	7	(h)	—	1.1	44	25 to 100	4	18	0.49	15	Aqueous	Aqu
2D	33	33.65	13.5(Extr.) 13.2(Scrub)	24(Extr.) 32(Scrub)	(h)	2a(Extr.) 2b(Scrub)	1.1(Extr.) 0.6(Scrub)	485	35 to 110	12	17.5	7.2	18	Organic	Aqu
2E	27	27.65	18.0	34	(i)	—	0.53	485	35 to 110	12	15.5	2.8	11	Aqueous	Or
IO	33.4	34.65	26.3	34	(i)	—	0.53	485	35 to 110	12	15.5	3.6	12	Aqueous	Or
2O	33.4	34.65	26.3	34	(i)	—	0.53	485	35 to 110	12	15.5	3.6	12	Aqueous	Or

NOTES:

(a) Distance between the bottom surface of the bottom disengaging section and the top surface of the top disengaging section.

(b) Distance between the bottom column support pad (elevation 674 ft. 4-1/4 in.) and the top surface of the top disengaging section.

(c) The cartridge height is the distance from the bottom plate to the top plate and does not include top and bottom supports of cartridg of the 2A Column is the distance between sawteeth of the packing support and hold-down grates.

(d) Measured from one extreme position to the other.

(e) Distance from the bottom of the lower disengaging section to the lower face of the piston with the piston at the bottom of the strok

(f) Based on influent-stream volumes.

(g) Estimated range of H.T.U. values for plant-size columns at optimum pulse frequency at processing rates corresponding to about 3 to 2 H.T.U.'s and the required number of transfer units are stated on an over-all aqueous-film basis for transfer from the aqueous phase organic-film basis for transfer from the organic phase.

(h) Stainless steel plates (1/16 to 3/32-in. thick) with 1/8-in. perforations on 1/4-in. equilateral-triangle centers giving 23% free ar Louver plates are inserted in the cartridges of the HA, IA, IBX, IBS, and 2D Columns as indicated in the figures.

(i) Fluorothene plates (1/8-in. thick) with 3/16-in. perforations on 3/8-in. equilateral-triangle centers giving 23% free area, spaced 4

(j) Fluorothene Raschig rings, 1-in.-diameter by 1-in.-long with continuous 1/16-in. thick wall.

(k) Based on a plutonium organic/aqueous distribution ratio of 0.02.

(l) Number of transfer units required to reduce uranium concentration in IEP to 0.1% in Pu at 520 g.Pu/ton U in HAF (5.8×10^{-5}% U loss,

FIGURE XII-1
INFLUENT-STREAM DISTRIBUTORS

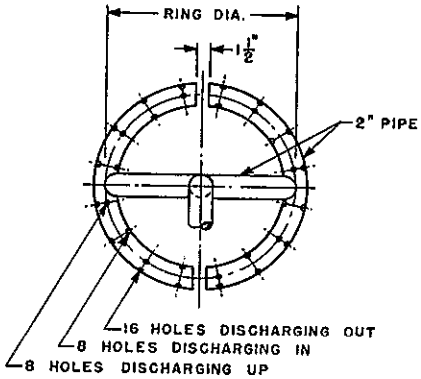

	DISTRIBUTOR		
	8AX, 2DX	1AX	1BX
RING DIAMETER, IN.	21	21	18
HOLE DIAMETER, IN.	1/4	1/4	3/16
DISCHARGE VELOCITY AT 10 TONS U/DAY, FT./SEC. (HW #3 FLOWSHEET)	0.35	0.70	0.56

FIGURE XII-1A

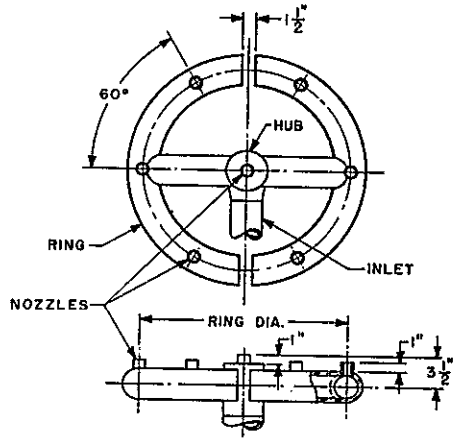

	DISTRIBUTOR					
	8AX, 1AX, 2DX	1BX	8CX, 2EX	1CX	1DX	2CX
RING DIAMETER, IN.	16	18	23	23	23	23
RING PIPE SIZE, IN.	2	2	3	3	3	3
HUB PIPE SIZE, IN.	3	3	4	4	4	4
NOZZLE PIPE SIZE, IN.	1	1	1	1	1 1/2	1 1/2
DISCHARGE VELOCITY AT 10 TONS U/DAY, FT./SEC. (HW #3 FLOWSHEET)	1.01	1.26	1.04	1.24	0.94	0.43

FIGURE XII-1B

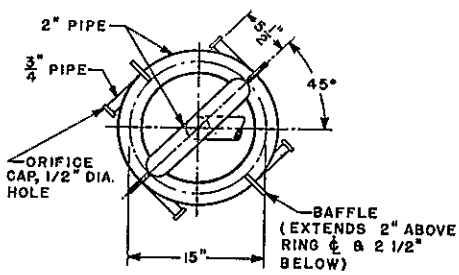

8AX, 1AX, AND 2DX DISTRIBUTORS

DISCHARGE VELOCITY AT 10 TONS U/DAY (HW #3 FLOWSHEET) = 2.12 FT./SEC.

FIGURE XII-1C

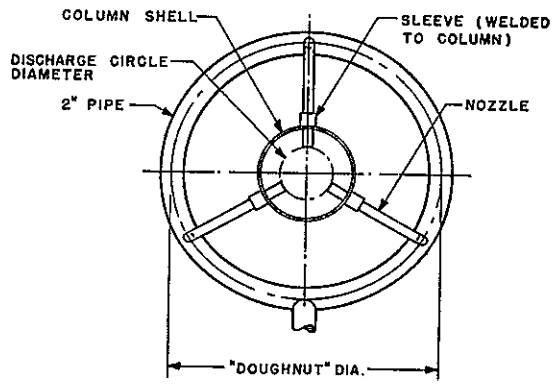

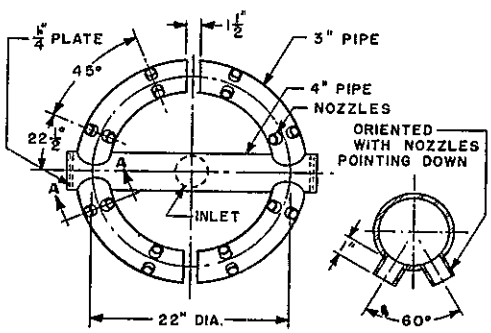

SECTION A-A

	DISTRIBUTOR				
	8CX, 1CX, 2EX	1CX	2CX		
NOZZLE PIPE SIZE, IN.	1	1/2	1/2		
DISCHARGE VELOCITY AT 10 TONS U/DAY, FT./SEC. (HW #3 FLOWSHEET)	0.80	0.92	1.25		

FIGURE XII-1E

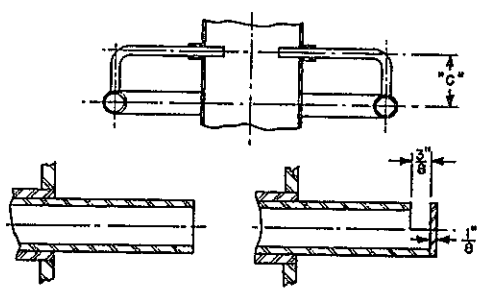

NOZZLE TYPE "A" NOZZLE TYPE "B"

	DISTRIBUTOR						
	8AXB, 1AXB, 2DXB	2AF	2AB, 2AXB	2BX	2AX	2BF	1BB
DOUGHNUT DIAMETER, IN.	42	27	27	30	27	30	24
DISCHARGE CIRCLE DIAMETER, IN.	26	6	6	6	3	3	3
NOZZLE PIPE SIZE, IN.	3/4	3/4	3/4	3/4	1/2	1/2	3/4
NOZZLE TYPE	A	A	A	A	B	B	B
NUMBER OF NOZZLES	4	3	3	3	3	3	3
POSITION OF DOUGHNUT (ABOVE OR BELOW NOZZLES)	BELOW	BELOW	BELOW	BELOW	ABOVE	ABOVE	ABOVE
DIMENSION "C", IN.	2-3/8	6	6	6	6	6	6
DISCHARGE VELOCITY AT 10 TONS U/DAY, FT./SEC. (HW #3 FLOWSHEET)*	0.26	0.60	0.075	0.075	0.22	0.22	0.68

*FLOW RATES FOR 1AXB AND 2AXB HAVE NOT BEEN SPECIFIED.

FIGURE XII-1D

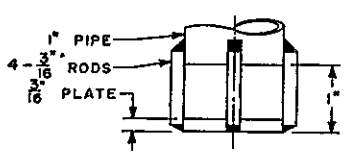

FIGURE XII-1F

1BXF DISTRIBUTOR

DISCHARGE VELOCITY AT 10 TONS U/DAY (HW #3 FLOWSHEET) = 0.20 FT./SEC.

FIGURE XII-2
LOUVER PLATES

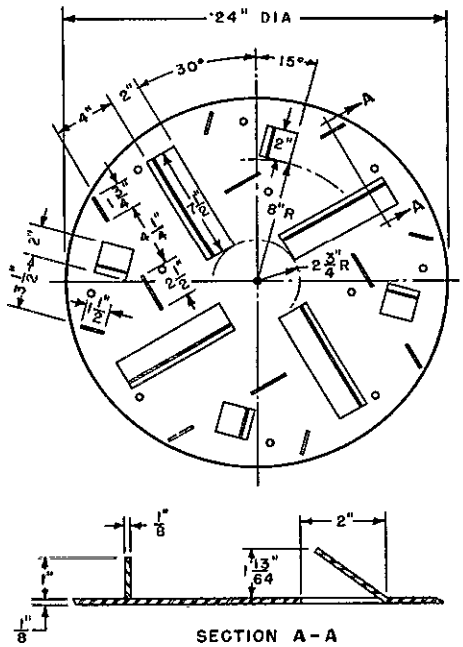

FIGURE XII-2A
A-TYPE EXTRACTION SECTION
13 % FREE AREA

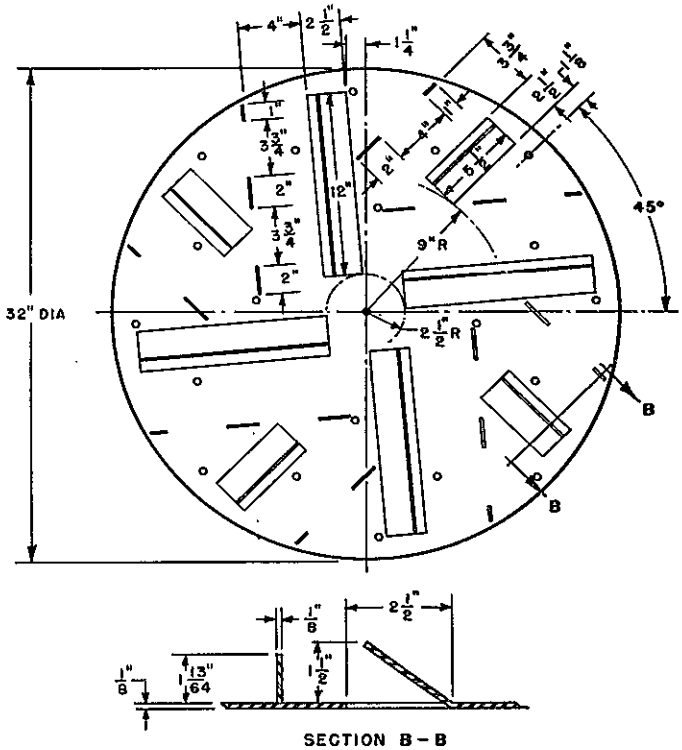

FIGURE XII-2B
A-TYPE SCRUB SECTION
16% FREE AREA

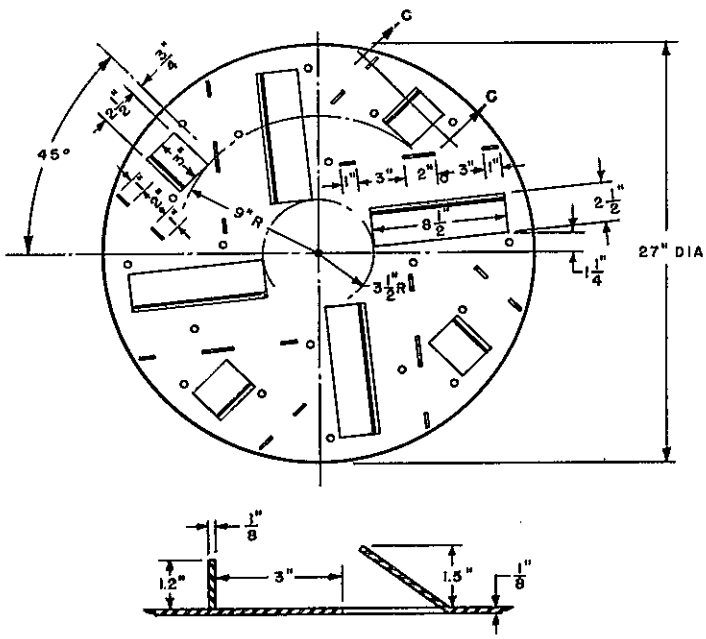

FIGURE XII-2C
IBX COLUMN
16.5% FREE AREA

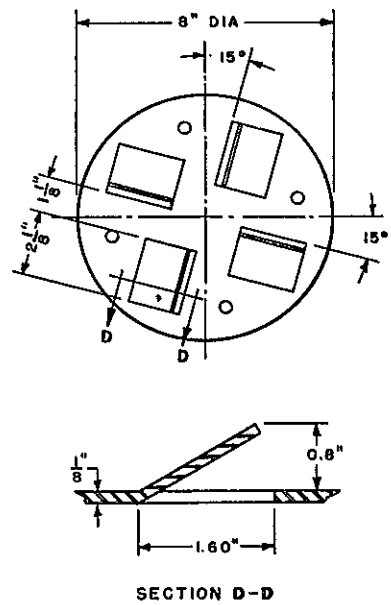

FIGURE XII-2D
IBS COLUMN
20% FREE AREA

NOTE: LOUVERS ARE LOCATED ABOVE PLATES IN ALL CASES, AND THE PLATES ARE ARRANGED WITH CORRESPONDING LOUVERS ALIGNED.

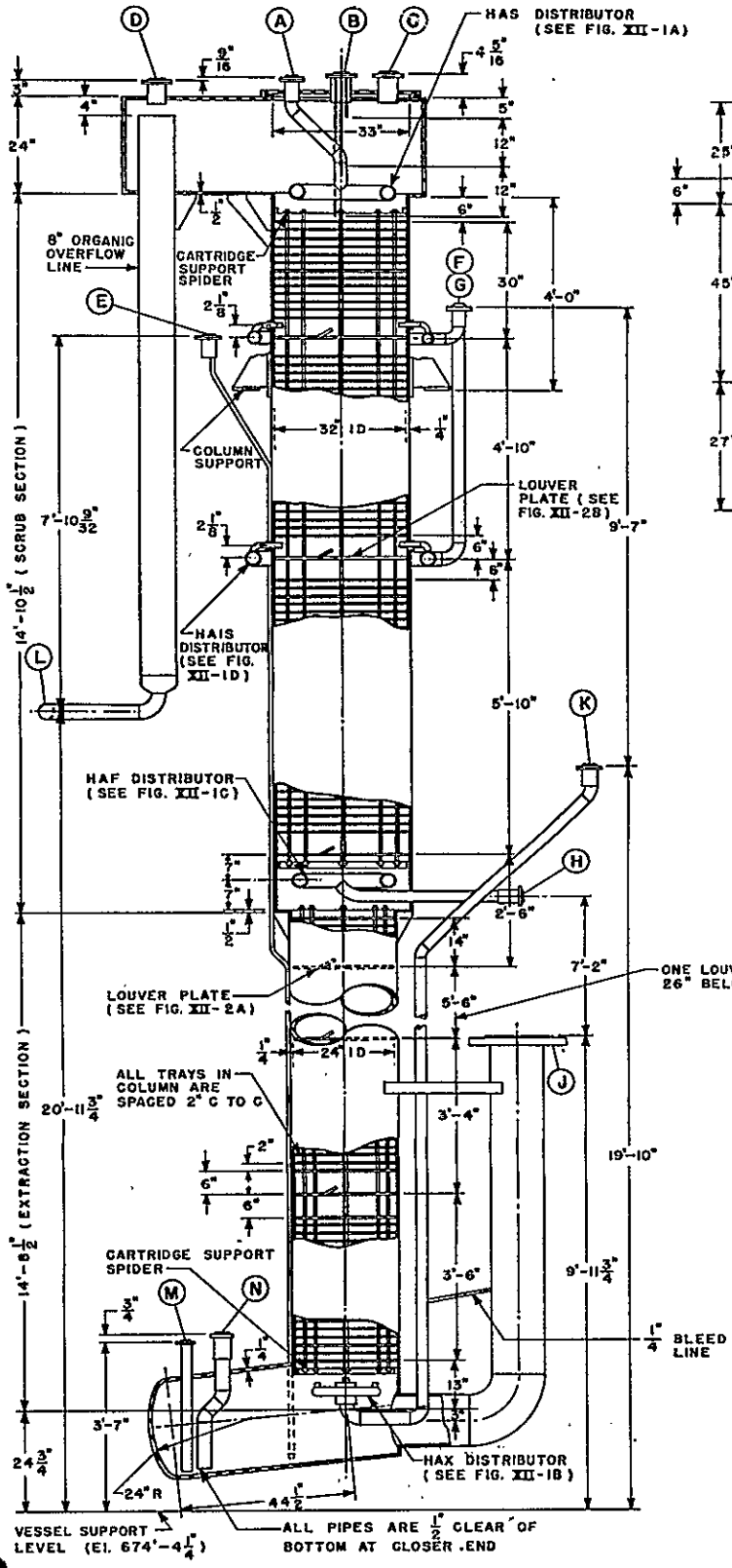

ELEVATION

FOR TRUE ORIENTATION OF CONNECTIONS SEE PLAN VIEW

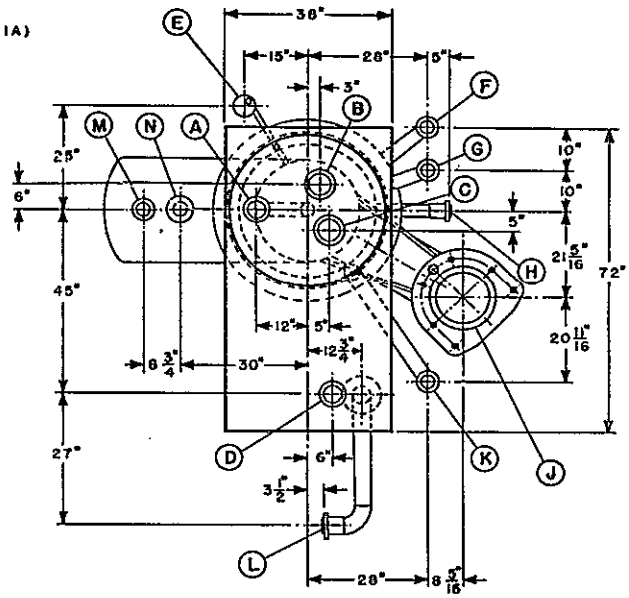

PLAN

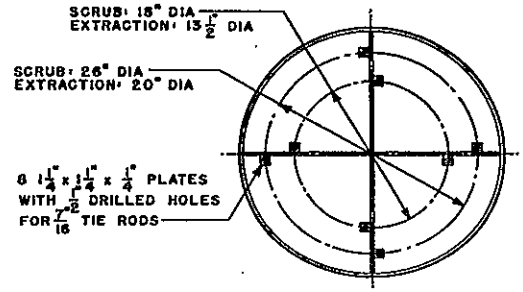

SUPPORT SPIDER

LEGEND

LINE OR NOZZLE CODE	SIZE OF PIPE	SIZE OF NOZZLE
A—HAS	2"	2"
B—INTERFACE DIP TUBES	—	3"
C—INTERFACE "CRUD" JET-OUT	—	3"
D—VENT	—	3"
E—STATIC PRESSURE	1/2"	2"(3-WAY)
F—LOWER HAIS	2"	2"
G—UPPER HAIS	2"	2"
H—HAF	2"	2"
J—PULSE LEG	12"	(SPL. FLANGE)
K—HAX	2"	2"
L—HAP	3"	3"
M—HAW (SPARE)	2"	2"
N—HAW	3"	3"

FIGURE XII-3
HA COLUMN

EQUIPMENT PIECE NO. T-H2
REFERENCE DRAWINGS:
STEEL & ALLOY TANK CO. (JOB NO. J-5200)
A-395
A-396 (COLUMN SUPPORT)
B-1342, 1343, 1344, 1352, (DETAILS)
NOTE: 1A AND 2D COLUMNS - EQUIP. PIECES T-J2 AND T-K2 - ARE IDENTICAL WITH THIS COLUMN.

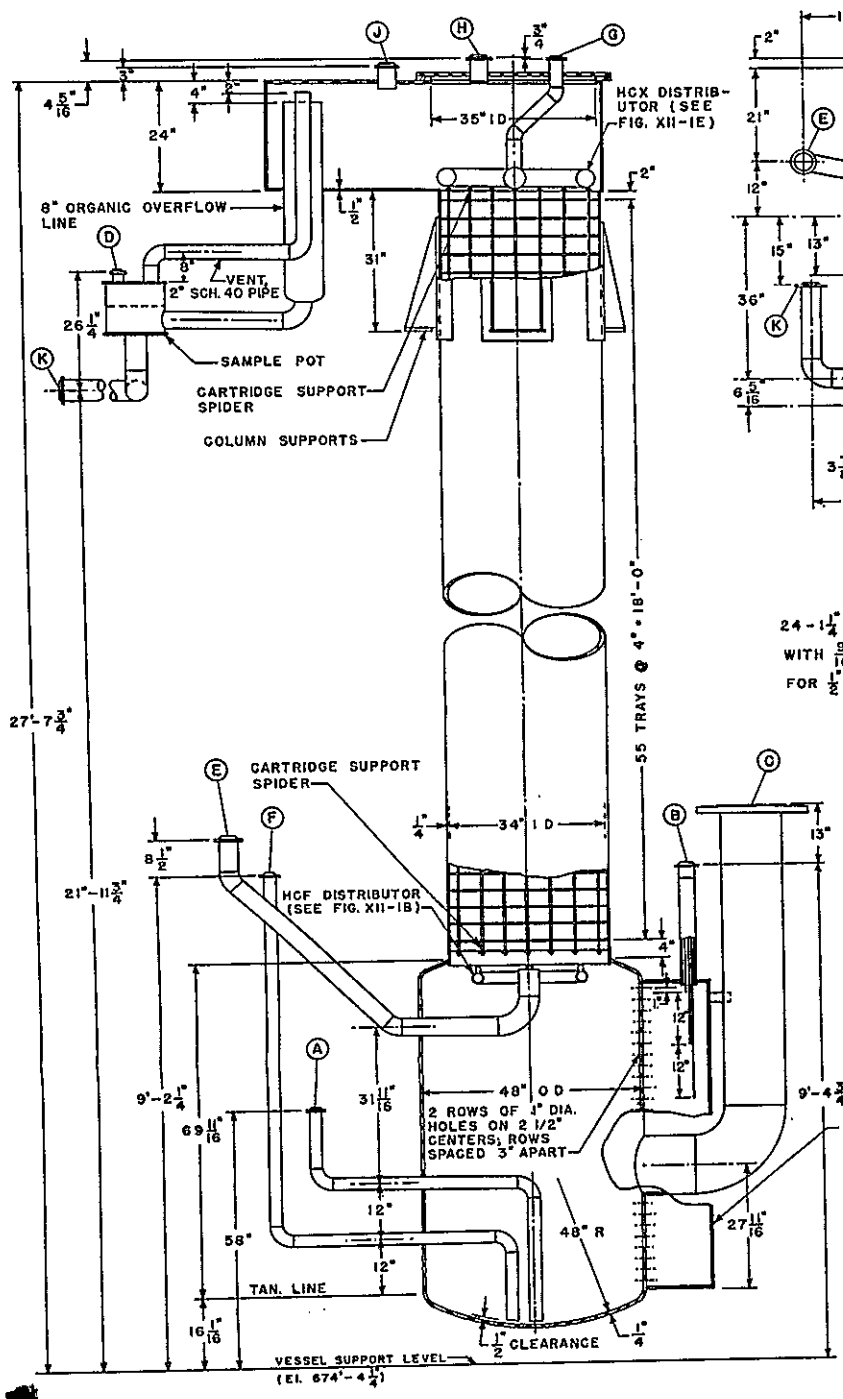

ELEVATION

FOR TRUE ORIENTATION OF CONNECTIONS SEE PLAN VIEW

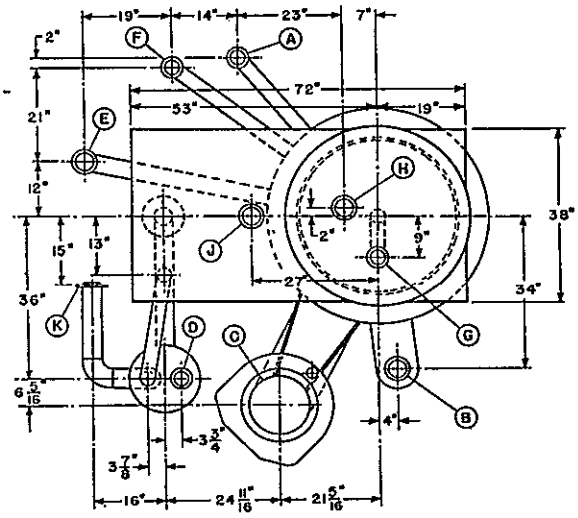

PLAN

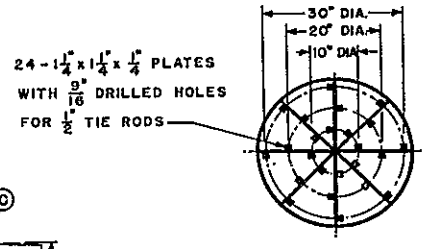

SUPPORT SPIDER

LEGEND

LINE OR NOZZLE CODE	SIZE OF PIPE	SIZE OF NOZZLE
A - HCP	2"	2"
B - INTERFACE DIP TUBES	3"	3"
C - PULSE LEG	12"	(SPL. FLANGE)
D - SAMPLER	1"	2"
E - HCF	3"	3"
F - HCP	2"	2"
G - HCX	2"	2"
H - SPARE	1"	3"
J - VENT	1"	3"
K - HCW	3"	3"

FIGURE XII-4

HC COLUMN

EQUIPMENT PIECE NO. T-H3
REFERENCE DRAWINGS:
STEEL & ALLOY TANK CO. (JOB NO. J-5200)
A-397
A-398 (COLUMN SUPPORT)
B-1345, 1346, (DETAILS)
C-723 (SUPPORT DETAILS)
NOTE: 1C AND 2E COLUMNS (EQUIP. PIECES T-J7 AND T-K3 ARE IDENTICAL WITH THIS COLUMN.

HW-31000

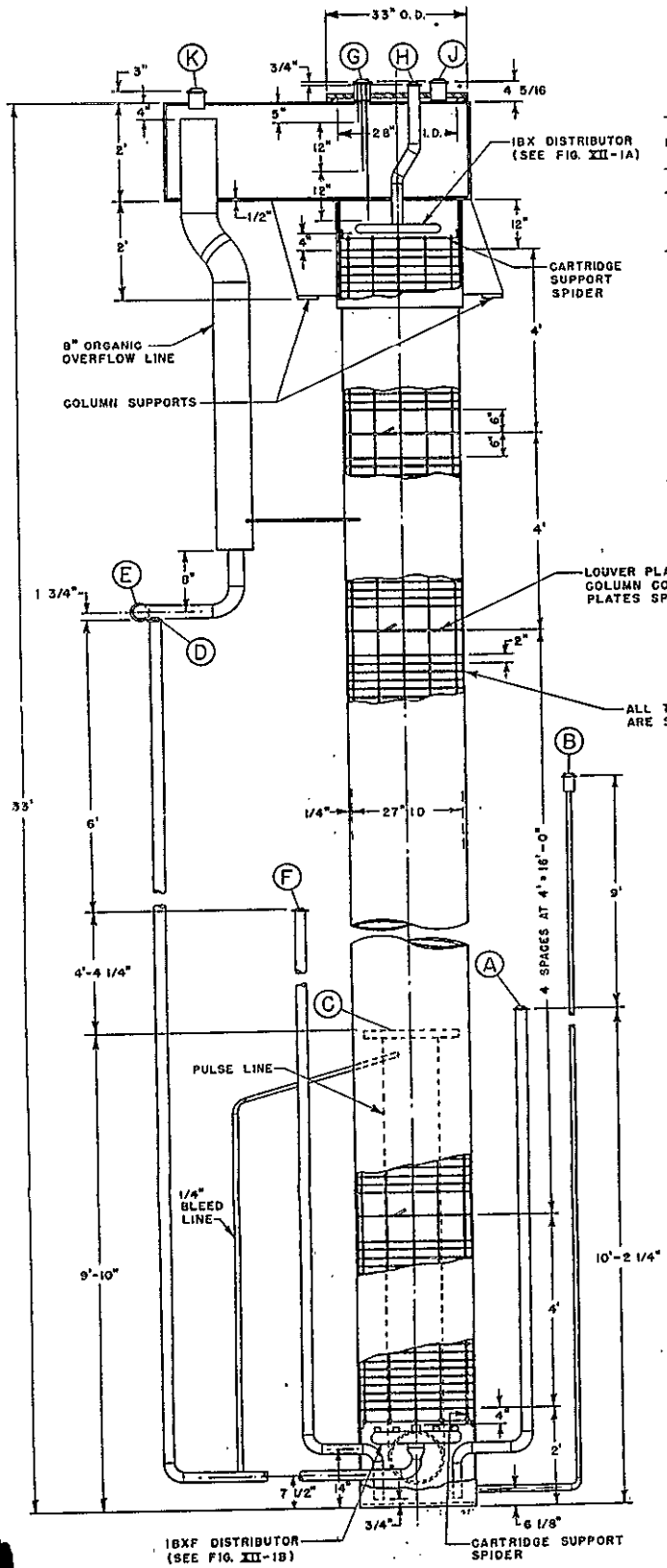

ELEVATION

FOR TRUE ORIENTATION OF CONNECTIONS SEE PLAN VIEW

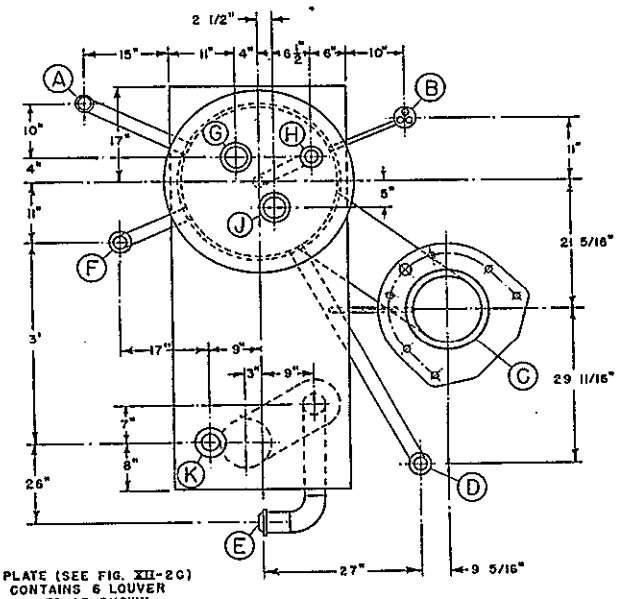

PLAN

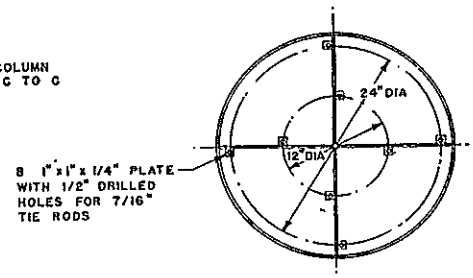

SUPPORT SPIDER

LEGEND

LINE OR NOZZLE CODE	SIZE OF PIPE	SIZE OF NOZZLE
A – IBXP (SPARE)	2"	2"
B – STATIC PRESSURE DIP TUBE	1/2"	2" (3-WAY)
C – PULSE LEG	12"	(SPL. FLANGE)
D – IBXF	2"	2"
E – IBU	3"	3"
F – IBXP	2"	2"
G – INTERFACE DIP TUBES	—	2"
H – IBX	2"	2"
J – INTERFACE "CRUD" JET-OUT	—	3"
K – VENT	—	3"

FIGURE XII-5

IBX COLUMN

EQUIPMENT PIECE No. T-J 6

REFERENCE DRAWINGS:
VITRO: H-2-52497-F
H-2-52498-F
(COLUMN SUPPORT)
A.O. SMITH:
LV-6364

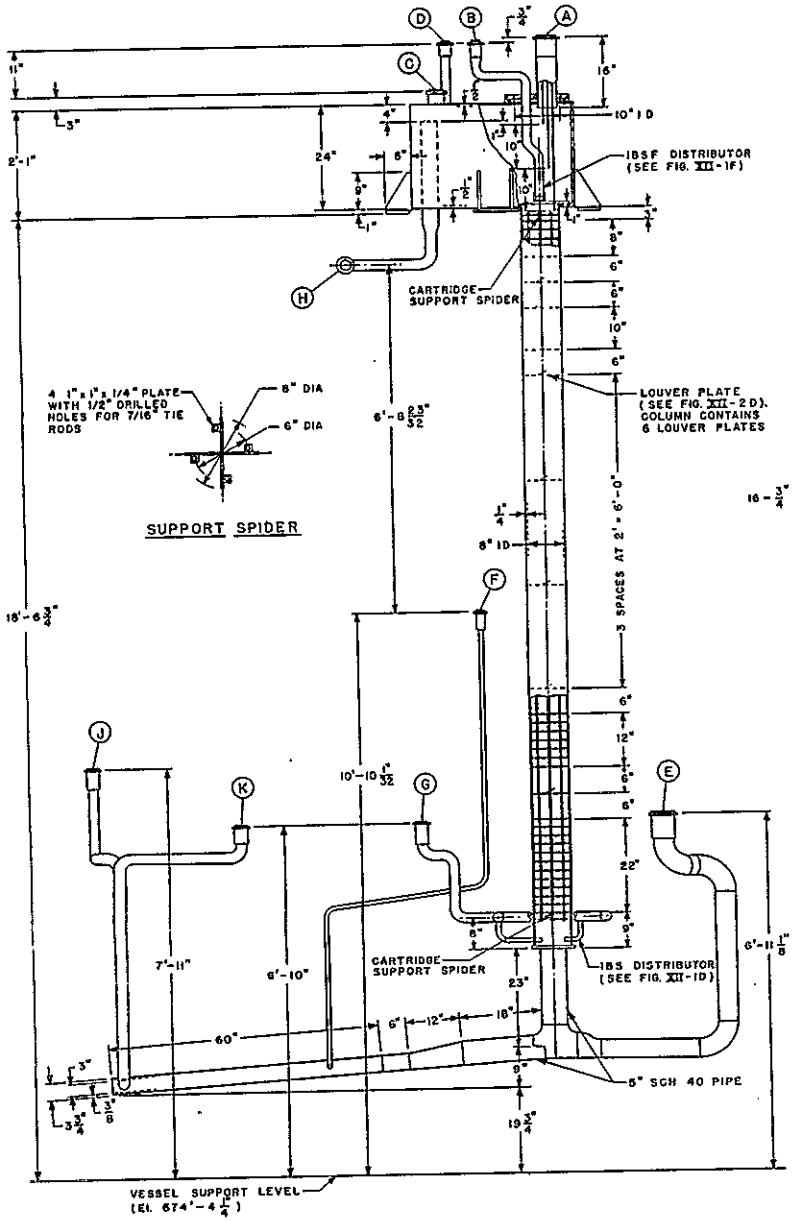

ELEVATION

FOR TRUE ORIENTATION OF CONNECTIONS SEE PLAN VIEW

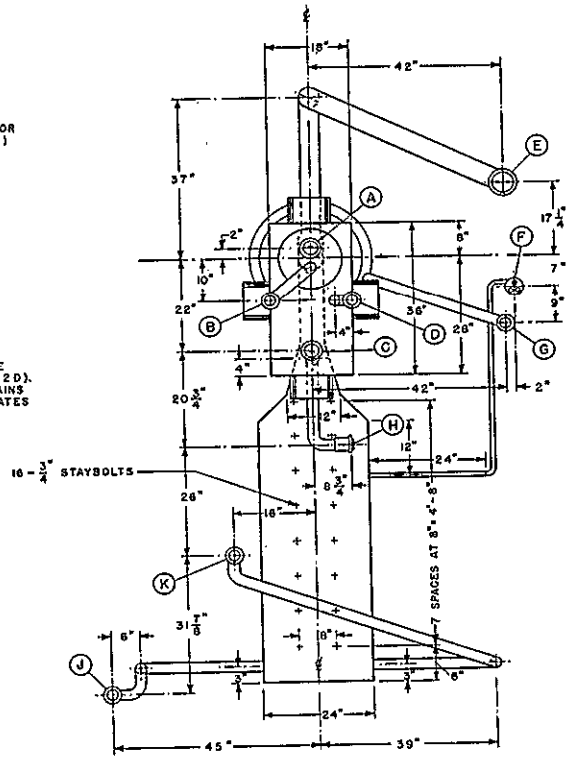

PLAN

LEGEND

LINE OR NOZZLE CODE	SIZE OF PIPE	SIZE OF NOZZLE
A-INTERFACE DIP TUBES	3"	3"
B-IBSF	1"	2"
C-VENT	—	3"
D-IBSF SPARE (FROM IBXP SPARE—IBX COLUMN JET-OUT)	2"	2"
E-PULSE LEG	4"	4"
F-STATIC PRESSURE DIP TUBE	1/2"	2"(3-WAY)
G-IBS	2"	2"
H-IBSU	2"	2"
J-IBP	2"	2"
K-IBP SPARE	2"	2"

FIGURE XII-6

IBS COLUMN

EQUIPMENT PIECE NO. T-J4
REFERENCE DRAWINGS:
STEEL & ALLOY TANK CO. (JOB NO. J-5200)
A-399
B-1347
A-400 (COLUMN SUPPORT)
B-1348 (COLUMN SUPPORT DETAILS)

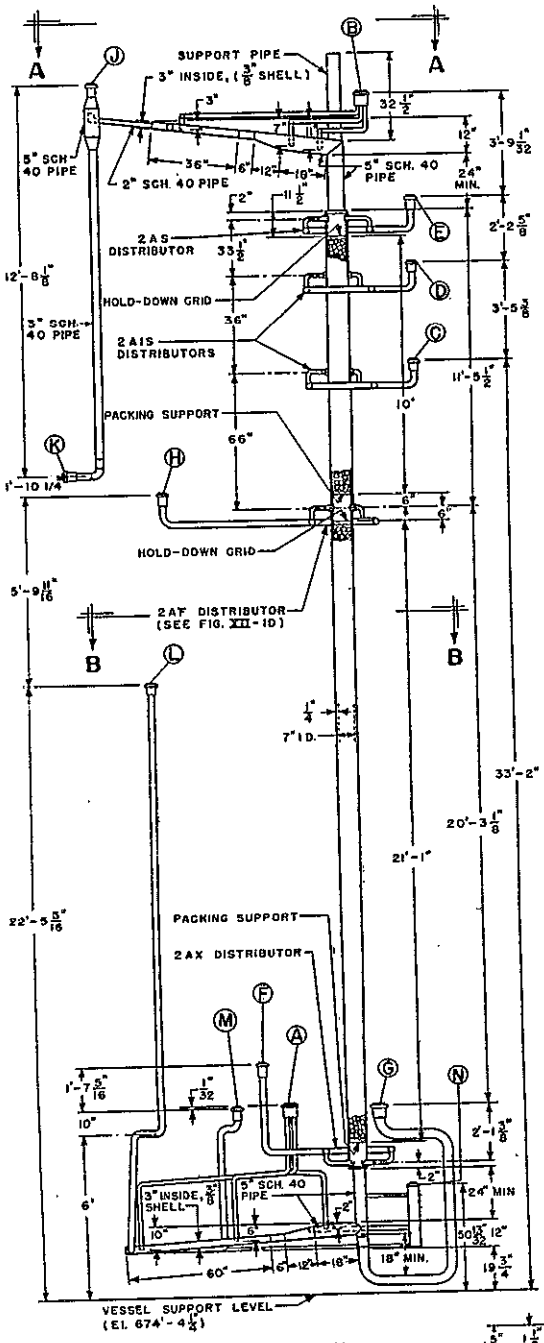

ELEVATION

FOR TRUE ORIENTATION OF NOZZLES SEE VIEWS A-A & B-B

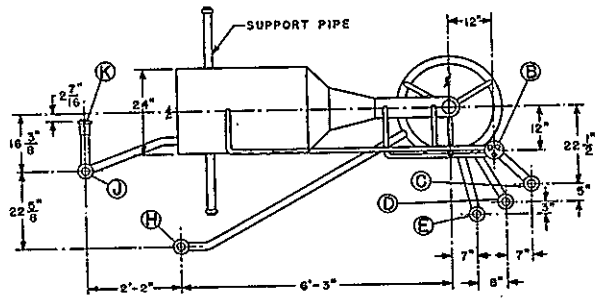

VIEW A-A

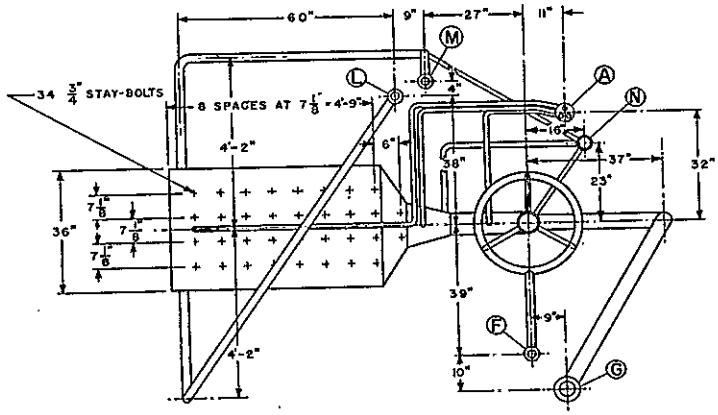

VIEW B-B

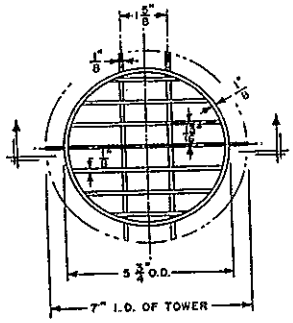

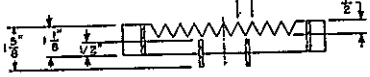

PACKING SUPPORT AND HOLD-DOWN GRID

SUPPORT ORIENTED WITH SAW TEETH UP; HOLD-DOWN WITH TEETH DOWN

LEGEND

LINE OR NOZZLE CODE	SIZE OF PIPE	SIZE OF NOZZLE
A – INTERFACE DIP TUBES (SPARE)	1/2"	2" (3-WAY)
B – INTERFACE DIP TUBES (SPARE)	1/2"	2" (3-WAY)
C – 2AIS	2"	2"
D – 2AIS	2"	2"
E – 2AS	2"	2"
F – 2AX	2"	2"
G – PULSE LEG	4"	4"
H – 2AF	2"	2"
J – VENT	–	3"
K – 2AP	2"	2"
L – 2AW	2"	2"
M – 2AW (SPARE)	2"	2"
N – INTERFACE PROBE	4"	4"

FIGURE XII-7

2A COLUMN

EQUIPMENT PIECE NO. T-L1
REFERENCE DRAWINGS:
STEEL & ALLOY TANK CO. (JOB NO. J-5200)
A-403
B-1353
A-404 (COLUMN SUPPORT)
B-1354 (COLUMN SUPPORT DETAILS)
B-1355 " " "

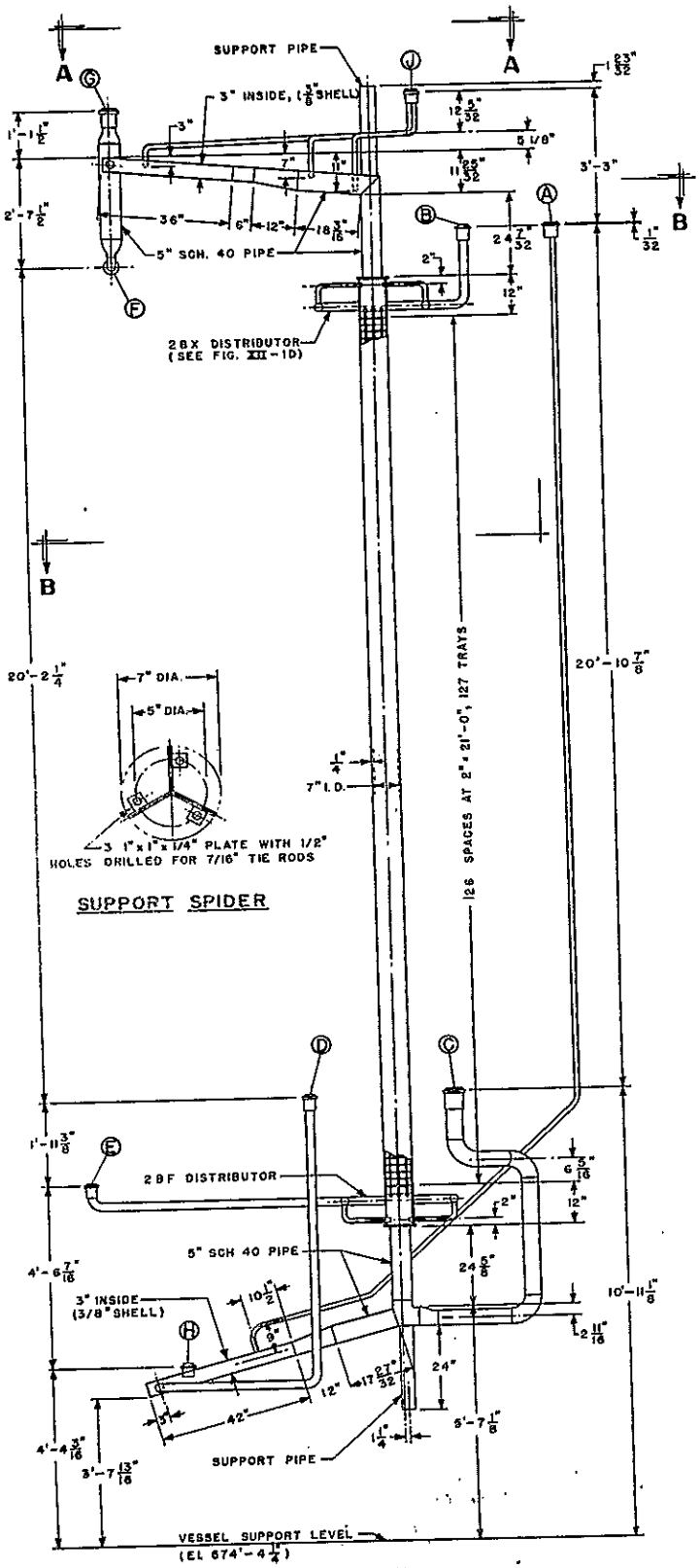

SUPPORT SPIDER

ELEVATION

FOR TRUE ORIENTATION OF NOZZLES SEE VIEWS A-A & B-B

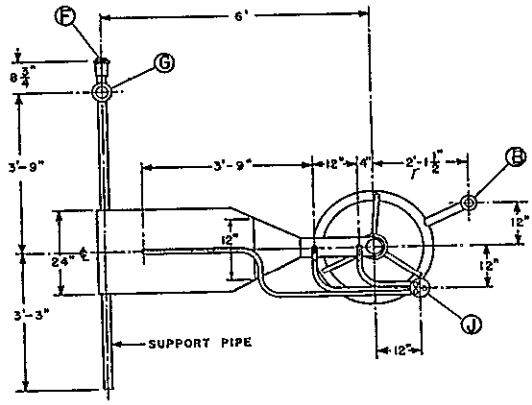

VIEW A-A

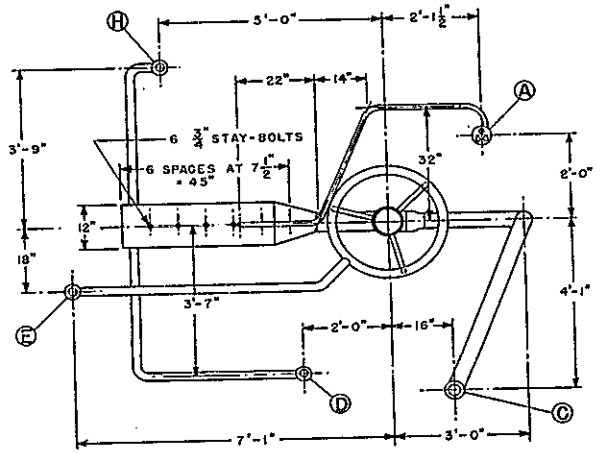

VIEW B-B

LEGEND

LINE OR NOZZLE CODE	SIZE OF PIPE	SIZE OF NOZZLE
A – STATIC PRESSURE DIP TUBE	1/2"	2" (3-WAY)
B – 2BX	2"	2"
C – PULSE LEG	4"	4"
D – 2BP (SPARE)	2"	2"
E – 2BF	2"	2"
F – 2BW	2"	2"
G – VENT	—	3"
H – 2BP	2"	2"
J – INTERFACE DIP TUBES	1/2"	2" (3-WAY)

FIGURE XII-8

2B COLUMN

EQUIPMENT PIECE NO. T-L2
REFERENCE DRAWINGS:
STEEL & ALLOY TANK CO. (JOB NO. J-5200)
A-401
B-1349, 1350
A-402 (COLUMN SUPPORT)
B-1351 (COLUMN SUPPORT DETAILS)

HW-31000

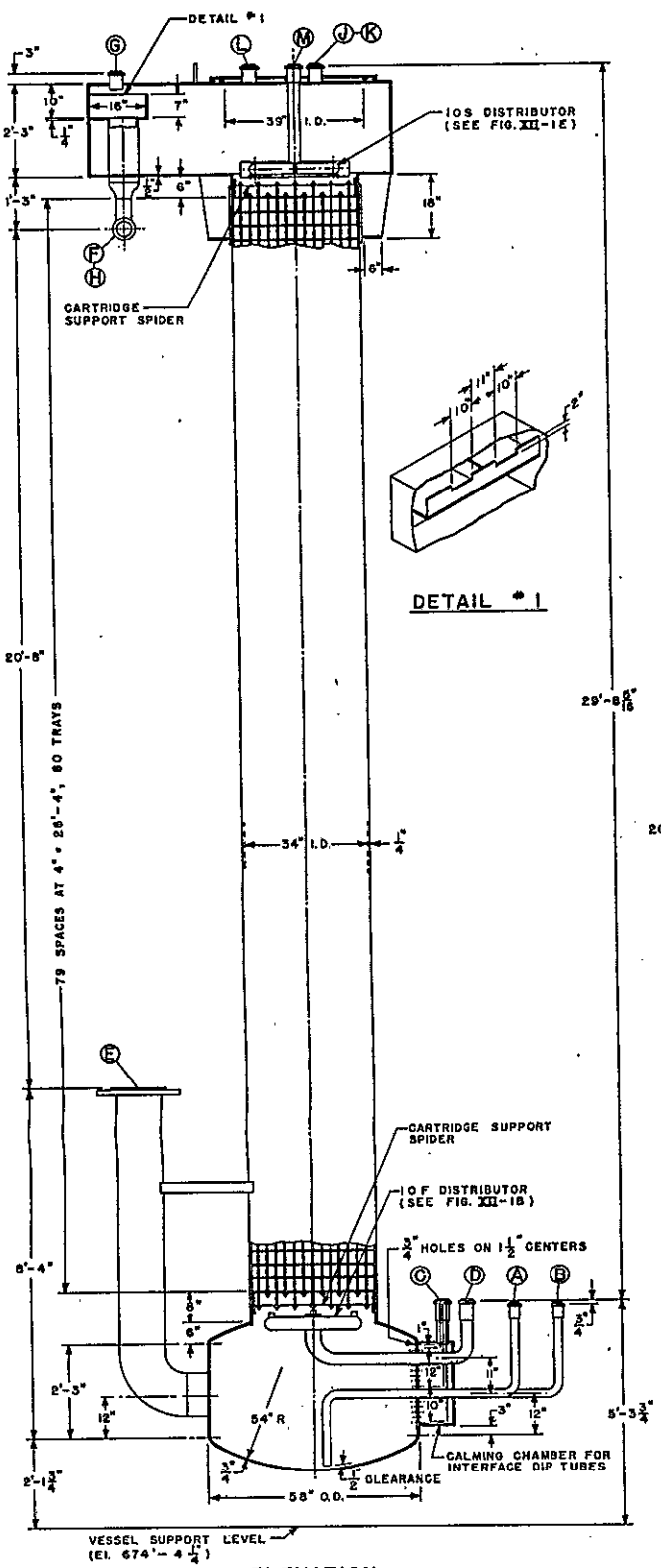

ELEVATION

FOR TRUE ORIENTATION OF NOZZLES SEE PLAN VIEW

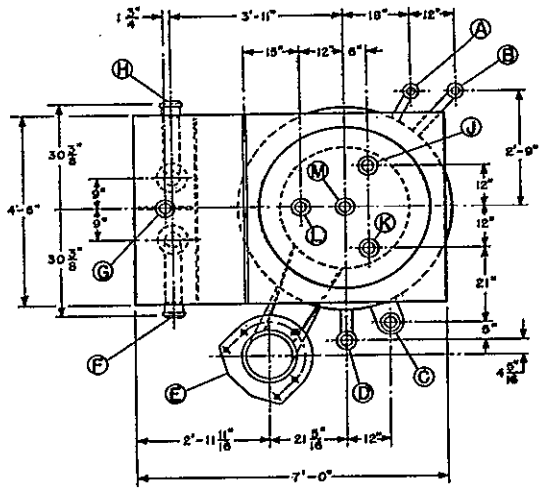

PLAN

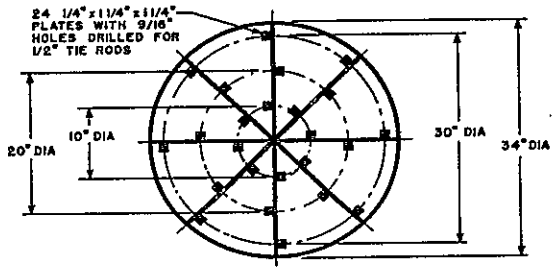

SUPPORT SPIDER

LEGEND

LINE OR NOZZLE CODE	SIZE OF PIPE	SIZE OF NOZZLE
A-10W	2"	2"
B-10W (SPARE)	2"	2"
C-INTERFACE DIP TUBES	3"	3"
D-10F	3"	3"
E-PULSE LEG	12"	(SPL. FLANGE)
F-10O	4"	4"
G-VENT	—	3"
H-10O	4"	4"
J-PRESSURE ALARM	—	3"
K-SPARE	—	3"
L-SPARE	—	3
M-10S	3"	3"

FIGURE XII-9

10 COLUMN

EQUIPMENT PIECE NO. T-G2
REFERENCE DRAWINGS:
STEEL & ALLOY TANK CO. (JOB NO. J-5200)
A-393
B-1340, 1341
C-722
A-394 (COLUMN SUPPORT)
C-724 (COLUMN SUPPORT DETAILS)

NOTE: 20 COLUMN, EQUIPMENT PIECE T-R2, IS IDENTICAL WITH THIS COLUMN EXCEPT THAT THE CONNECTOR NOZZLES ARE REPLACED BY STANDARD FLANGES.

HW-31000

FIGURE XII-10

TYPICAL COLUMN SUPPORT

(HC COLUMN)

REFERENCE DRAWINGS:
STEEL & ALLOY TANK CO.
(JOB NO. J-5200)
A-398
C-723

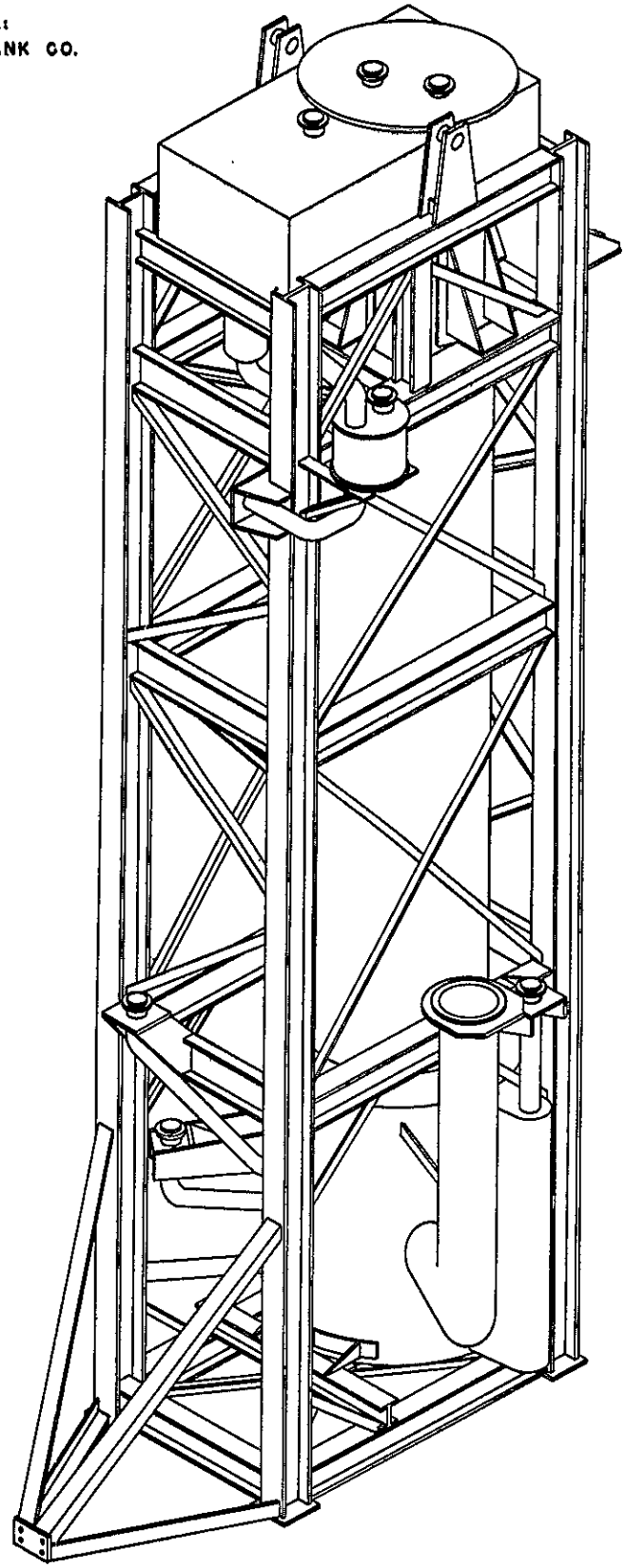

[redacted]

FIGURE XII-11

HC COLUMN WITH PULSE SYSTEM

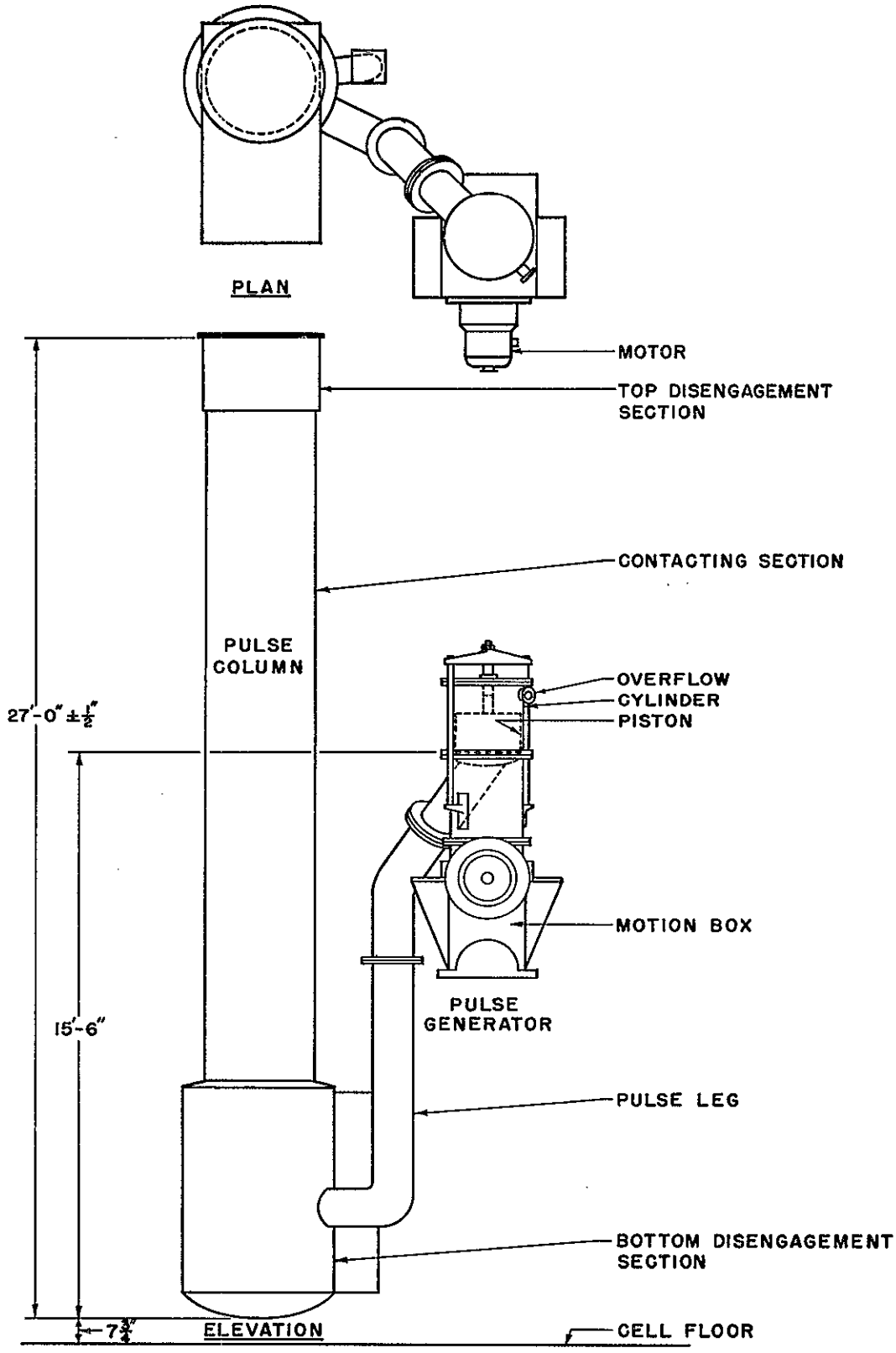

[redacted]

FIGURE XII-12

PULSE GENERATOR

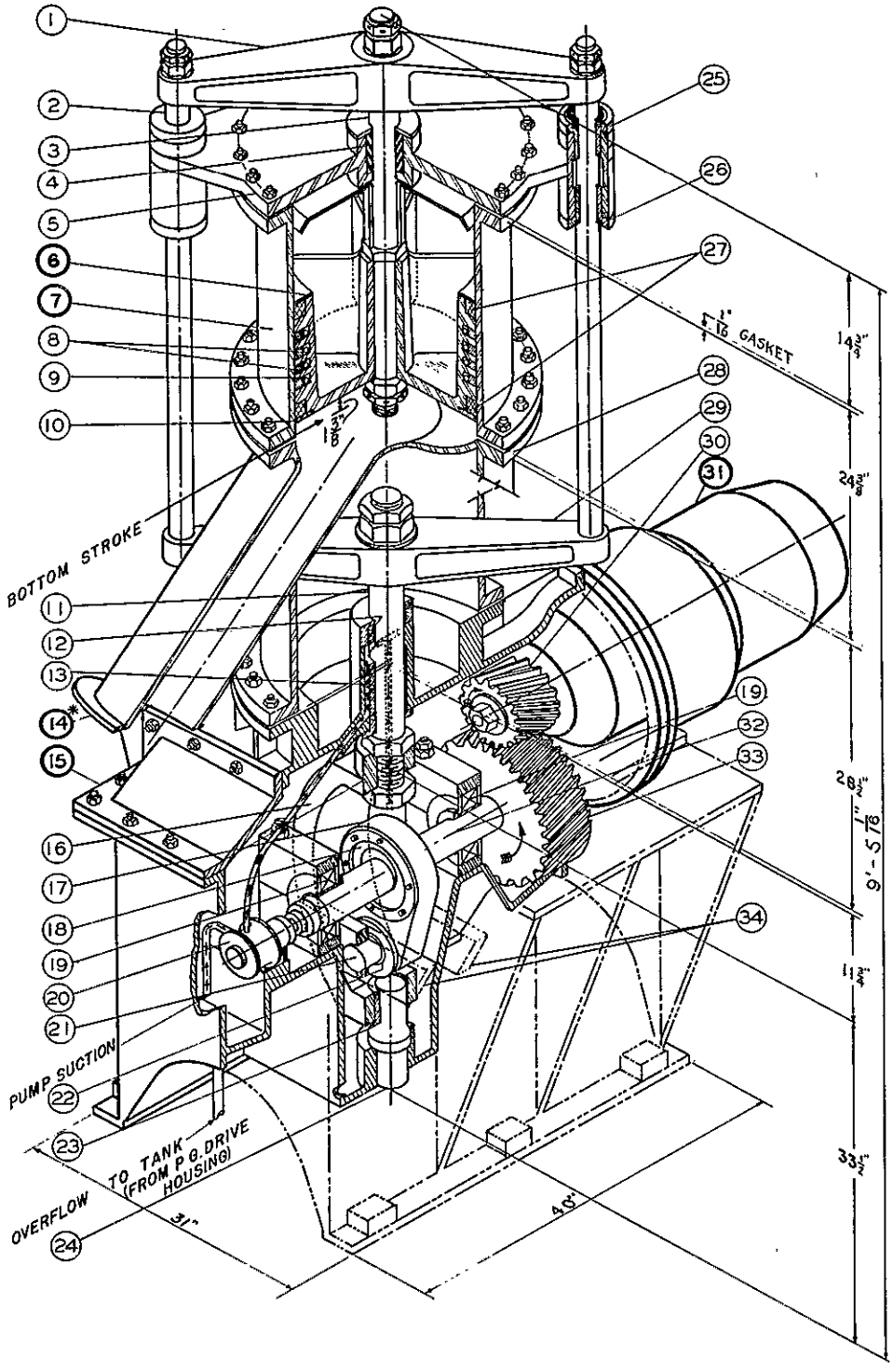

1 UPPER HORIZONTAL PISTON YOKE
2 PISTON YOKE SPACER RODS
3 PISTON ROD
4 CYLINDER COVER VAPOR SEAL BUSH.
5 CYLINDER COVER
6 PISTON
7 CYLINDER
8 PISTON RINGS
9 PISTON RING EXPANDERS
10 RIDER RING CLAMP RING
11 UPPER XHEAD YOKE ROD
12 UPPER X HEAD SHAFT SEAL
13 UPPER XHEAD SHAFT BUSHING
14 PULSE LEG TRANSITION PIPE
15 DRIVE HOUSING
16 XHEAD YOKE
17 CONNECTING ROD
18 ECCENTRIC BRG.
19 CRANKSHAFT BRG. (INBD-OUTBD)
20 OIL PUMP
21 ECCENTRIC PIN
22 ECCENTRIC BUSHING
23 XHEAD YOKE GUIDE BUSHING
24 XHEAD YOKE GUIDE PIN
25 PISTON YOKE SPACER ROD GUIDE BUSHING
26 HOUSING SEAL
27 PISTON RIDER RINGS
28 CYLINDER SUPPORT
29 LOWER HORIZONTAL PISTON YOKE
30 DRIVE PINION
31 ELEC DRIVE MOTOR
32 CRANKSHAFT
33 DRIVE GEAR
34 XHEAD YOKE BARS

*(14) SHOWN ROTATED 45° (HORIZONTAL PLANE) CW FROM TRUE POSITION

PART III: PLANT AND EQUIPMENT, continued

CHAPTER XIII. OTHER PROCESS EQUIPMENT

CONTENTS Page

A. GENERAL 1302

1. Process Equipment Classification 1302
2. Definition of Terms 1302
3. General Design Considerations 1303
   3.1 Class I vessels 1303
   3.2 Class II vessels 1304
   3.3 Class III vessels 1305

B. "HOT" TANKS 1305

C. "COLD" TANKS 1307

D. SLUG CARRIER 1310

E. DISSOLVERS AND OFF-GAS EQUIPMENT 1311

F. URANIUM AND ACID CONCENTRATORS AND CONDENSERS 1313

G. ACID ABSORBER AND FRACTIONATOR 1315

H. CENTRIFUGES 1316

I. PLUTONIUM CONCENTRATORS AND PRODUCT REMOVAL VESSELS 1318

J. VESSEL-VENT SILVER REACTOR AND AUXILIARIES 1320

K. STRAINERS 1320

L. WATER DEMINERALIZER 1320

REFERENCES 1321

LIST OF TABLES AND FIGURES 1323

CHAPTER XIII. OTHER PROCESS EQUIPMENT

In addition to the solvent-extraction columns described in the preceding chapter, the Purex Plant involves the operation of a variety of other major process equipment: tanks, dissolvers, concentrators, centrifuges, etc. Design specifications for this equipment are primarily based on process requirements discussed in Part II of this Manual. In this chapter major process equipment pieces are described, with emphasis on physical features important from a processing viewpoint. Pumps, jets, and agitators are described in the next chapter.

A. GENERAL

1. Process Equipment Classification (3)

For convenience in specifying designs and construction practices, non-mechanical equipment pieces which contain a liquid or gaseous stream during Purex-Plant processing are generally designated as "vessels". Other major equipment pieces for which vessel specifications are not directly applicable, such as ready-made purchased items (e.g., the strainers), the centrifuges, and the slug carrier, are excluded. Vessels are divided into three classes, depending on their intended use.

Class I vessels are those that are designed to contain radioactive materials. They are made of stainless steel and are normally located in the Canyon or in the PR Room.

Class II vessels are those made of stainless steel that are not intended to contain radioactive materials.

Class III vessels are those which are fabricated from materials other than stainless steel and are not designed to contain radioactive materials.

2. Definition of Terms

Throughout this chapter special terms and conventions are used for convenience in describing the physical features of equipment pieces. These are defined below.

Pipe and nozzle size. Unless specifically stated to the contrary all piping used in process equipment fabrication is of standard iron pipe size, Schedule 40. Likewise, pipe flanges not designed for remote maintenance are 150-lb. standard, with raised faces. A "remote flange" is similar to a standard flange except that it is equipped with aligning dowels and captive studs for remote assembly. A "connector nozzle" is one which is equipped with a Hanford remote male connector (described in Chapter XV).

Stainless steel. Unless otherwise designated, the term "stainless steel" indicates Type 304L or Type 347 stainless steel. Type 304L is preferred and is generally specified, but Type 347 may in certain instances have been substituted.

Carbon steel. The term "carbon steel" is used generically to include all types of steel except stainless steel and other special alloys. "Carbon steel" includes such classifications as "mild steel", "black iron", "structural steel", and "boiler plate".

Insulated. Unless otherwise noted, the adjective "insulated" indicates that the vessel is covered with a 2-in.-thick layer of Fiberglas, which is in turn covered with a shield of 0.0375-in.-thick stainless-steel sheet.

3. General Design Considerations

Major considerations in the design of Purex-Plant process equipment included (a) economical and satisfactory fulfillment of the chemical process requirements and (b) satisfactory fulfillment of those special requirements associated with the construction and operation of radioactive processing plants. Mechanical designs satisfying these requirements were guided by specifications and general criteria which are summarized below:

(a) Applicable codes and specifications related to design, fabrication, and quality of materials were followed. For example, for process vessels fabrication in accordance with the A.S.M.E. Boiler Construction Code, Section VIII, was specified; equipment piping was specified to be in accordance with the applicable American Standards Association code; and materials were governed by American Society for Testing Materials Specifications, modified to suit special requirements.

(b) Maximum interchangeability of process equipment was provided by designing only the necessary standard sizes compatible with process requirements.

(c) Final acceptance of process vessels was generally based on tests, such as hydrostatic pressure tests, performed at the construction site. The type and conditions of testing were determined by the particular equipment piece.

For particular equipment pieces or vessels of a particular classification, detailed criteria and specifications for design and construction were followed. For vessels, which include most of the process equipment pieces, principal features are summarized below.

3.1 Class I vessels [3,13,18]

All Class I vessels were designed and fabricated in accordance with the same specifications except for certain "critical" vessels for which special welding was required, as described in Chapter XVI. Class I vessels are essentially of stainless-steel, all-welded construction, with carbon steel (protected with Amercoat 74) used only for necessary external attachments not in contact with the process fluid. Double butt welds were used for pressure-holding seams wherever possible, and weld quality was controlled by radiographing or by other specialized techniques depending on weld location. Formed heads were specified to be solution-heat-treated prior to welding; stress relieving following welding was prohibited. Completed stainless-steel assemblies were pickled in HNO_3 or HNO_3-HF solutions.

In general, basic design pressures for Class I vessels were taken to be an internal pressure of 5 lb./sq. in. ga. or 110% of the operating pressure, whichever is greater, and an external pressure of 5 lb/sq. in. ga. However, this general specification was amended to cover various specific equipment types or parts such as condensers, tank coils, etc.

Class I vessel designs are characterized by special features made necessary by the service for which they are intended, viz., processing of radioactive materials by remote-control methods. Thus, in nearly all cases they are designed for remote maintenance. Also, they are "flushable" and "drainable" to the extent that they may be filled with liquid so that essentially the entire interior surface is wet and they may be emptied without leaving appreciable liquid holdup. External and internal surfaces are free of retention pockets, cracks and crevices.

Remote maintenance of equipment necessitates the use of special construction features to allow its installation or removal by use of a remotely operated crane. Thus, the equipment piece must (a) be provided with remote connectors for nozzles up to 4-in. size and with remote flanges for larger sizes; (b) be provided with lifting bails so placed that when suspended it will be balanced and will hang essentially in its installed position; (c) be designed for alignment at installation using dowels and aligning holes or trunnions and trunnion guides; and (d) fabricated to unusually close tolerances in order that replacement equipment or parts may be readily installed.

3.2 Class II vessels (3,14,15)

Class II vessels are of all-welded stainless-steel construction with carbon steel used only for supports and attachments not in contact with a process fluid. Since processing or storage of radioactive materials is not required of these vessels, standard methods were used for their design, fabrication, and installation. For purposes of preparing detailed design and fabrication specifications, Class II vessels are divided into two groups, including (a) processing vessels (tanks) in the 202-A Building and 276-A Building, normally considered to be pressure vessels, and (b) atmospheric storage tanks located in the 211-A Chemical Tank Farm and the 203-A Uranium Storage Tank Farm.

For the design and fabrication of Class II vessels as pressure vessels, the general requirements of the A.S.M.E. Boiler Construction Code were followed. Basic design pressures were taken to be an internal pressure of 15 lb./sq. in. ga. or 110% of the operating pressure, whichever is greater, and an external pressure of 5 lb./sq. in. ga. With few exceptions, standard flanged and dished heads and standard flanged connections were used. Fabrication of vessels of this class also included solution-heat-treating of formed heads, pickling of stainless-steel assemblies (or, for large vessels, internal pickling and external sandblasting) and hydrostatic and/or pneumatic testing according to code requirements.

For the design and construction of Class II storage tanks, the general requirements of the American Petroleum Institute Standard 12C were followed. Designs were for the maximum internal pressure imposed by a liquid of 1.8 specific gravity with loads due to wind pressure and earthquake forces also considered. Fabrication features of Class II storage tanks included the use of double-welded butt joints for shell-plate welds, internal cleaning by sand-blasting, testing according to code, and hydrostatic testing of tank coils at 150 lb./sq. in. ga. For HNO_3 storage tanks, external carbon steel attachments (e.g., reinforcing) were painted with Amercoat 55.

3.3 Class III vessels (3,15)

Class III vessels, like those of Class II, are divided into two groups, viz., pressure vessels and atmospheric storage tanks, depending on design and fabrication methods. Except for the fact that they are fabricated from carbon steel or aluminum, specifications for these two groups are similar to those for Class II vessels of the same types. However, Class III storage vessels for water (TK-30) and solvent(TK-40 and TK-41) are designed for a maximum internal pressure imposed by a liquid of 1.0 specific gravity, rather than 1.8. Also, carbon-steel caustic storage tanks are painted internally with a chlorinated-rubber-base paint.

B. "HOT" TANKS

The radioactive-service tanks described in this section include all those located in the processing cells of the Canyon except for the Dissolver (described under E1) and the Plutonium Receiver (described under 14). All are Class I vessels designed and fabricated according to the criteria discussed in Subsection 3, above.

1. Standard Tanks

The following three types of vessels are designated as "standard tanks" for Canyon use as reaction vessels, receivers, and storage and head tanks: (a) the 5000-gallon, general purpose tank (Fig. XIII-1), (b) the 1725-gallon, general purpose tank (Fig. XIII-2) and (c) the 15,000-gallon oval tank for solvent storage (Fig. XIII-3). These tanks are fabricated of cylindrical (or oval) shells welded to flanged, flat heads and contain coils for heating and cooling arranged in banks of concentric helices. Dimensions and salient information are listed in the following table:

STANDARD "HOT" TANKS

Nominal volume, gal.	5000	1725	15,000
Number of tanks in Canyon	25	2	2
Outside diameter of tank, ft.	10	7	10.5 by 16 oval
Height of tank, ft.	9.25	6.75	14
Plate thickness, in.:			
Shell	1/2	3/8	3/8
Heads	1	3/8	9/16
Length of 2-in. pipe in coil, ft.	475	150	950
Heat transfer area, sq. ft.	295	93	590
Number of nozzles for pumps or agitators	2	1	5
Number of pipe nozzles	20	15	18

2. Special Tanks

2.1 2AF Tank (10,11)

The 2AF Tank, TK-J5, shown in Figure XIII-4, is a 212-gal., horizontal cylindrical tank designed for blending IBP (from the IB Scrub Column) to 2AF specifications and for feeding the 2AF to the 2A Column. This is accomplished on a continuous basis, and with sufficient holdup capacity to insure that 99.9% of the IBP stream is statistically retained in the tank for at least three minutes (at production rates not greater than approximately 20 tons U/day). To attain this holdup time, the tank is divided into three roughly equal-volume compartments by means of segmental baffles. The upstream compartment, which receives the IBP, and the middle compartment are equipped with agitators; the pump for feeding 2AF is located in the downstream compartment.

As shown by Fig. XIII-4, the 2AF Tank measures 2 ft. 7 in. O.D. by 7 ft. 5 in. long. Both the shell and the flanged and dished heads are 3/8 in. thick. A jacket 5 ft. 10 in. long covers about 270° of the tank's circumference.

2.2 IOF Tank (O Tank Contactor) (10,11) (See Fig. XIII-5.)

The 5000-gal. IOF Tank, TK-G1, is the feed tank for the IO Column, but is also designed to function as a cocurrent continuous contactor for treating the organic stream (ICW and HCW) should the need arise. Shell,

heads (except for nozzles), and coil are similar to the standard 5000-gal. tanks (see Subsection B1). The tank is 10 ft. O.D. by 9 ft. 3 in. high. A central cylindrical chimney 4 ft. 7-3/4 in. I.D. leaves an annular space 2 ft. 8 in. wide. A packing support grate located in the annulus 2 ft. 9 in. above the tank bottom supports a 4-ft. depth of 1-in. stainless-steel Raschig rings. Organic-phase and aqueous-phase distributors are located above the packing to provide cocurrent flow downward through the packing and into the disengaging space below the packing support. The lower portion of the cylindrical chimney is perforated to allow liquid passage to the central space where organic and aqueous pumps are located. The top head contains two 24-in. nozzles.

2.3 Decanters (See Fig. XIII-6.)

Utility decanter, F-14, and ITO decanter, G-6, are for the continuous separation of entrained aqueous phase from organic streams. The decanters are similar except for minor differences in external piping and brackets. The vessels are 4 ft. O.D. by 5 ft. 10 in. high. The aqueous and organic outlets are 4-in. flanged nozzles to which are attached adapters that have remote connectors. Liquid feed to the decanter is introduced to the middle of the tank through a system of distributing baffles. Settled aqueous phase rises through a jack leg to the aqueous discharge nozzle 4 ft. 3 in. above the bottom of the tank. The organic overflows through a weir located 5 in. above the aqueous outlet.

2.4 Other special tanks

Dissolver vessels are described in Section E. Plutonium tanks are described in Section I.

C. "COLD" TANKS

1. Aqueous Make-Up Tanks

Aqueous make-up tanks are used for make up, adjustment and blending, storage, and delivery of "cold" aqueous solutions. With two exceptions they are of three standard sizes: (a) four are 2 ft. O.D. by 4 ft. high (95 gallons), (b) sixteen are 5 ft. O.D. by 5 ft. high (750 gallons), and (c) eight are 8 ft. O.D. by 8 ft. high (3000 gallons). All aqueous make-up tanks have dished heads, and all but four are stainless steel. Three tanks are carbon steel; one tank is aluminum. The largest opening of the 2-ft.-O.D. tanks is a 4-in. nozzle, but larger tanks have a 16-in. nozzle, to be used for solids addition where necessary. Certain tanks are equipped with coils, agitators, and/or discharge-line strainers as required.

The 60% Nitric Acid Meter Tank is 2 ft. O.D. by 2 ft. 6 in. high. The Demineralized Water Head Tank is a horizontal aluminum vessel 8 ft. O.D. by 12 ft. long.

Descriptions of all the aqueous make-up tanks are listed in Table XIII-1.

2. Pipe and Operating Gallery Tanks

The Dissolver Drowning Tanks, the Centrifuge Spray Tanks and various addition tanks are located in the Pipe and Operating Gallery. These tanks listed as to use, size, and material of construction are as follows:

202-A BLDG. PIPE AND OPERATING GALLERY TANKS

Tank No.	Use	Volume, Gallons	Diameter and Height, Feet	Material of Construction
TK-A3-A B3-A C3-A	Dissolver drowning	3500	7.5 x 11.5 (Horizontal)	Aluminum
TK-E2-A G3-A R3-A	Centrifuge spray	100	2 x 4.75	Stainless steel
TK-G5-A	Org. storage add.	3500	8 x 11	S.S.
TK-L9-A	Pu cell add.	25	1.1 x 4	S.S.
TK-R1-A	Org. blend add.	3500	8 x 11	S.S.
TK-R5-A	Org. treatment add.	3500	8 x 11	S.S.

3. Solvent Treatment Tanks (4)

The 276-A Building (solvent treatment) contains six vessels for treatment and washing of organic solvent. These tanks are all made of stainless steel and are equipped for contact maintenance. Three are similar to corresponding Canyon vessels except that they have standard flanged nozzles in place of remote connectors. Dimensions and features of these tanks are tabulated below:

276-A BLDG. SOLVENT TREATMENT TANKS

Tank No.	Use	Volume, Gal.	Diameter and Height, Ft.	Similar "Hot" Tank	Vessel Equipment and Features
TK-R1	20F Tank	5000	10 x 9.25	IOF Tank	See Subsection B2.2
TK-R2	20W Tank	1725	7 x 6.75	1725 Gal.	See Subsection B1
TK-R5 TK-R7	Organic centrifuge receivers	9500	10 x 22	--	Agitator; 280' of 2" pipe in coil
TK-R6	Decanter	540	4 x 5.8	Decanter	See Subsection B2.3
TK-R8	Wash collection	5000	10 x 9.25	--	Dished heads; Agitator; 494' of 2" pipe in coil

4. Recovered Acid Vault

4.1 Recovered acid storage

Nitric acid recovered from the Purex process is stored in two 15,000-gal. tanks, TK-U1 and TK-U2. These tanks are similar to the standard 15,000-gal. oval tanks (see Subsection B1) except that standard pipe flanges are used on nozzles, instead of remote connectors.

4.2 Laboratory cavern waste receivers (4)

TK-U3 and TK-U4 receive laboratory low-radioactivity waste for holding before transfer to the disposal cavern. These tanks are identical to the 9500-gal. tanks, TK-R5 and TK-R7 (see Subsection C3 above).

5. Chemical Storage Tanks (5,15)

All tanks in 211-A Tank Farm and 203-A Uranium Storage Tank Farm are fabricated in accordance to general specifications discussed under A3 above. The chemical storage tanks are listed in the following table:

CHEMICAL STORAGE TANKS

Tank Farm 211-A and Uranium Storage Tank Farm 203-A

Tank No.	Use	Volume, Gallons	Diameter and Height, Feet	Material of Construction	1" Pipe in Coil, Feet
TK-10	Nitric acid sampler	3,500	8 x 10	Stainless steel	--
TK-11 TK-12	Nitric acid storage	100,000	25 x 30	S.S.	154
TK-13 TK-14	Storage of recovered nitric acid from 224-U Building	8,000	10 x 14	S.S.	--
TK-20 TK-21	Caustic storage	20,000	15 x 24	Carbon steel*	70
TK-30	Demineralized water storage	100,000	25 x 30	Aluminum	94
TK-40	Hydrocarbon storage	65,000	22 x 24	Carbon steel	--
TK-41	TBP storage	25,000	15 x 24	Carbon steel	75
TK-50	Sulphuric acid storage	500	5 x 5	Carbon steel	--
TK-P1 TK-P2 TK-P3 TK-P4	Recovered UNH storage	100,000	25 x 30	S.S.	300

*) Coated internally with a chlorinated-rubber-base paint.

D. SLUG CARRIER

Irradiated slugs are transported from the pile areas to the Processing Building (202-A) in a perforated stainless-steel bucket contained within a lead-shielded cask, both of which are standard equipment pieces for H.A.P.O. separations plants. For the Purex Plant, three casks are carried in separate water-filled vats on a specially built railroad car (compared to the older-type car which carried two casks).

The cask is a massive, double-walled steel box with lead shielding (12.5 in. thick on the sides) occupying the spaces between the walls. The top is fitted with a removable lead-shielded cover. The perforated, stainless-steel slug bucket is an open-top box which may be placed in the cask. S-shaped tubes through the cask walls and lid allow water from the vats on the cask car to circulate to the slugs in the bucket, thereby preventing excessively high temperatures due to the heat associated with slug decay.

During loading or unloading operations, the cask, the cask lid, and the slug bucket are lifted and moved by means of a crane. All are provided with lifting lugs for this purpose. In addition, the cask lid is locked or unlocked by means of an impact wrench. The cask assembly with a full load of 8-in. slugs (approximately 210 to 260 slugs, weighing 1700 to 2100 lb.) weighs approximately 23 tons.

E. DISSOLVERS AND OFF-GAS EQUIPMENT (10, 11)

Uranium slugs are dissolved in the three identical Dissolvers contained in Cells A, B, and C. Each Dissolver is provided with a Dissolver Tower, a Knock-Out Pot, an Ammonia Scrubber*, an Off-Gas Heater, a Silver Reactor, and an Off-Gas Filter for processing the radioactive off-gases evolved during Dissolver operation. The entire assembly is shown in Fig. XIII-7. All equipment pieces shown are Class I vessels, and are described below.

1. Dissolvers

The Dissolver is an insulated tank 8 ft. O.D. by 12 ft. 4 in. high with a 5/16-in.-thick shell wall. The bottom head is 1 in. thick; the top head is 9/16 in. thick, and neither is dished. Heating or cooling is accomplished with three concentric coils containing approximately 813 ft. of 2-in. pipe with 505 sq. ft. of surface area. The slug basket is 5 ft. 5 in. I.D. by 6 ft. 6 in. deep and is formed of 1/2-in. by 2-in. bars. The slug-charging hole is 2 ft. 10 in. I.D. with raised face to mate against the Teflon gasket on the removable cover plate. Guide rods and plates within the charging hole guide the slug bucket onto tripping hooks that allow the bucket to tip upside down for slug unloading. The top head also contains a 16-in. flanged nozzle for the vapor outlet.

2. Dissolver Towers

The Dissolver Tower, functionally a "downdraft condenser", is a vertical-tube condenser arranged for downward, shell-side flow of Dissolver off-gas and downward tube-side flow of cooling water. Cocurrent absorption of nitrogen dioxide in the condensed vapors on the heat-transfer surfaces results in the recovery of HNO_3 which is returned to the Dissolver. The unabsorbed fraction of the off-gas passes through the vessels located downstream in the off-gas system.

The tower is 4 ft. 4 in. O.D. by 23 ft. over-all height and is insulated. The shell and lower dished head are 1/4 in. thick, while the top head is a flat plate 1-1/2 in. thick. Both the shell and the 16-in. vapor inlet line contain expansion joints. Dissolver off-gas passes through the vapor inlet line to the top of the tower, where inlet baffles distribute the vapors around the tube bundle. Condensed liquid, which contains the regenerated acid, drains back to the Dissolver from a 4-in. nozzle near the bottom of the

---

*) See footnote, p. 1312.

tower shell. Gases leave the bottom of the tower through a 10-in. line to the Knock-Out Pot.

The tube bundle includes 511 tubes, 1-in. O.D. (14 B.W.G. wall) by 18 ft. long, finned to 2 in. O.D. with 20 radial fins extending over the central 15 ft. of the tubes. A relatively high cooling-water velocity is attained in the tubes, resulting in an increased heat-transfer coefficient, by inserting a 3/4-in.-O.D. rod into each tube for its full length, thereby forming an annulus of reduced cross-sectional area for water flow. Based on the inside tube surface, the total area available for heat transfer is approximately 1675 sq. ft. Based on the outside tube and fin surface, the area available for absorption is approximately 15,000 sq. ft.

3. Dissolver Knock-Out Pots (De-Entrainment Towers)

The Knock-Out Pot is a separator for removing entrained liquid from the Dissolver Tower off-gas stream. The pot is a 4-ft.-O.D. by 5-ft. 2-in.-high insulated tank with 1/4-in.-thick walls and heads. The top head is flanged and dished; the bottom head is flanged and flat. The pot is packed with a 2-ft.-deep bed of 1-in. stainless-steel Raschig rings. The gas inlet is a 10-in. flanged nozzle on the side near the bottom. The gas outlet is a 10-in. flanged nozzle in the top head. Liquid drains out of a 4-in. connector nozzle leading from the bottom of the pot back to the Dissolver.

4. Ammonia Scrubbers*

The Ammonia Scrubber is a bubble-cap column for water scrubbing the Dissolver off-gas to remove ammonia formed in the Dissolver during fuel element coating removal.

As shown in Fig. XIII-7, the scrubber surmounts the Knock-Out Pot on a special adapter flange. Made of 1/4-in.-thick plate, the scrubber is 30 inches in diameter and 7 ft. 10 in. high. It contains three bubble-cap trays spaced 18 inches apart. Each tray has twelve 4-inch diameter bubble caps. Dissolver off-gas enters the bottom of the scrubber through the adapter flange and leaves through a 10-inch nozzle on the top. Water is fed to the top tray of the scrubber while the Dissolver is operating in the coating-removal step. During the remainder of the Dissolver operating cycle, the scrubber is empty and dry.

5. Off-Gas Heaters

The Off-Gas Heater is a finned-tube heat exchanger for heating the Dissolver off-gas before it enters the Silver Reactor. The heater is 2 ft. 8 in. O.D. by 11 ft. long over-all and is insulated. There are

---

*) The information presented in this subsection is provisional. At the time of writing, a tentative decision to include ammonia scrubbers of the indicated design in the Purex Plant was under review.

171 steam-heated tubes, 1 in. O.D. by 8 ft. long, finned to 2 in. O.D. with 20 radial fins over the central 6 ft. of the tubes. The 1/4-in.-thick shell has a ring baffle at the gas inlet and an expansion joint. Steam is inside the tubes and the 3/8-in.-thick dished heads. Ten-inch flanged nozzles serve for gas inlet and outlet.

6. Silver Reactors

Iodine is removed from the Dissolver off-gas by reaction with silver nitrate deposited on the packing in the Silver Reactor. The reactor vessel is 4 ft. 6 in. O.D. by 13 ft. over-all height and is insulated. The shell and both dished heads are 1/4 in. thick. The vessel is packed for a height of 8 ft. with 1/2-in. ceramic Berl saddles coated with silver nitrate. The straight portion of the shell is heated by an external steam coil of 15 turns of 2-in. pipe, which is covered by an outer shell of 20 ga. stainless steel sheet. Ten-inch flanged nozzles in the top head and in the shell near the bottom serve as gas inlet and outlet, respectively. Inside the top head are three spray nozzles for wetting the packing with chemical regenerating solutions.

7. Off-Gas Filters

To remove any remaining particulate matter, the Dissolver off-gas is filtered through a Fiberglas filter bed. The filter vessel is an insulated, dished-head tank 9 ft. O.D. by 8 ft. 9 in. high. Ten-inch flanged nozzles are located in the side wall near the bottom head and in the top head for gas inlet and outlet, respectively. The Fiberglas filter is in four layers held between packing supports. From the bottom up the layers are arranged as follows:

Layer	Fiberglas Type	Depth, In.	Bulk Density, Lb./Cu.Ft.
1	115 K	12	1.5
2	115 K	6	3.0
3	115 K	12	6.0
4	AA	1	1.2

Fiberglas Type 115 K has a mean fiber diameter of 0.00115 in. and the fibers are kinked. The mean fiber diameter of Type AA is 0.00004 in.

F. URANIUM AND ACID CONCENTRATORS AND CONDENSERS

Purex-process concentrators include (a) three uranium concentrators for reducing the volumes of the HCP, ICU, and 2EU streams with prior steam stripping for TBP removal, and (b) two acid concentrators for reducing the volume of aqueous wastes and simultaneously distilling off associated HNO_3. Designs of these five "large" concentrators are identical. They are Class I vessels and are installed in the cells of the Canyon along with their associated condensers (except for the No. 2 Acid Concentrator, which uses no condenser).

1. Large Concentrators

The large concentrator, as shown in Fig. XIII-8 and Fig. XIII-9, is a vertical-tube thermal-recirculation steam-heated evaporator, containing 1260 one-inch-O.D. tubes in two 10-ft.-long tube bundles, surmounted by a 9-ft.-diameter, 14-ft.-high bubble-cap column and packed section. Operation is continuous; concentrated liquid overflows from the evaporator while the vapors pass through the tower to a condenser. In the case of the uranium concentrators, liquid feed enters the tower and is stripped of solvent by the ascending vapors. For acid concentration the feed enters the evaporator; the tower serves as a de-entrainment section for the distillate. The entire assembly is insulated to minimize reflux.

The lower portion of the concentrator body is a draft tube 2 ft. 6 in. in diameter and 8 ft. high. Each of the two remotable tube bundles (630 one-inch O.D. by 10-ft.-long tubes encased in a steam cannister 3 ft. 2 in. in diameter) is immersed in the liquid contained in a cylindrical shell, 4 ft. 7 in. in diameter by 14 ft. high. These shells are connected to the draft tube by 21-in.-diameter pipes at the bottom and by 4-ft. 7-in. by 6-ft. rectangular ducts at the top.

The stripping and de-entrainment tower is 9 ft. O.D. by 14 ft. high. It rests on the ducts that join the side cylinders to the top of the draft tube. The tower has 7 trays, each with 162 four-inch-O.D. bubble caps on 6-1/8 in. center-to-center equilateral triangular spacing. Weirs and down-comers are arranged for double, cross flow (both ways from a diameter to chords or vice versa). Above the top tray is a 3-ft.-high section packed with 1-in. Raschig rings. A 16-in. flanged nozzle at the top of the tower is the vapor outlet.

2. Condensers (See Fig. XIII-10)

The standard large condensers (E-F1, E-F5, E-F11-2, E-H2, E-K4-2, and E-J8-2) are used to condense the overhead vapors of the large concentrators (except from the No.2 Acid Concentrator) and of the acid absorber and to condense the exhaust steam from the vessel-vent and cell-vent jets.

The medium condenser (E-F9) condenses the vapors from the Waste Rework Tank, TK-F8.

The standard small condensers are used to condense the vapors from the Plutonium concentrators in L Cell and from the vacuum jet in the PR Room. These condensers are described in Subsection I3.

The large and medium condensers are of multi-pass shell-and-tube construction with water inside the tubes. Tube sheets are fixed and segmental baffles are installed to cause cross-shell flow of the vapor phase. At the vapor inlet end the main body of the shell is re-entrant into an enlarged section, forming an impingement baffle around the tubes and an annular space into which the vapor flows. Descriptions of the large and medium condensers are presented in the following table:

STANDARD CANYON CONDENSERS

	Large Condenser	Medium Condenser
Outside diameter of shell, in.	37	18
Over-all length, ft.	10.5	10
Number of tubes	568	108
Tube size	1 in. O.D. (12 B.W.G.) by 9 ft. long	
Heat transfer area, sq. ft.*	1050	200
Number of tube passes	6	4
Number of shell baffles	4	4
Size of vapor inlet nozzle, in.	16	8

*) Based on the inside diameter of the tubes.

G. ACID ABSORBER AND FRACTIONATOR

The original Purex-Plant design included an atmospheric-pressure fractionator, T-F5, for concentrating the acid-containing vapors from the No. 2 Acid Concentrator to 60 per cent HNO_3. Subsequent plant and pilot-plant experience has shown that vacuum fractionating to this concentration appreciably increases the equipment life expectancy by virtue of decreased corrosion rates. (See Chapter XVI.) Consequently, installation of a vacuum fractionator to produce 60% HNO_3 after Plant start-up is planned. This Vacuum Nitric Acid Fractionator is planned to operate in series with T-F5 (now designated "Nitric Acid Absorber"), which will operate as an absorber to produce approximately 30% HNO_3.

Both the Nitric Acid Absorber and the Vacuum Nitric Acid Fractionator are insulated Class I vessels.

1. Nitric Acid Absorber [10,11]

The Nitric Acid Absorber is 37 ft. 7 in. high over-all and is divided into 3 parts process-wise. The reboiler (not used for absorption) is 3 ft. 6 in. in diameter and contains the heat exchanger bundle (260 1-in. O.D. by 6-ft.-long tubes) set vertically around an 18-in.-diameter central draft tube. A 3-ft. 6-in. diameter lower tower section above the reboiler has 8 trays on 12-in. spacing. Each tray has 49 three-inch O.D. bubble caps, on 4-1/4 in. center-to-center equilateral triangular spacing, set over 2-in.-O.D. vapor risers. Downcomers and weirs are arranged for single cross flow of the liquid. The overflow weir height is 1-1/2 in. Above the lower tower section is the 10-ft.-diameter upper tower section. In the 10-ft.-diameter section there are 7 trays on 12-in. spacing, each tray with 156 five-in.-O.D.

bubble caps on 6-1/2 in. center-to-center equilateral triangular spacing. Downcomers and weirs are arranged for double cross flow (both ways from a diameter to chords or vice versa) with weir height at 1-1/4 in. Vapor from the No. 2 Acid Concentrator enters the Nitric Acid Absorber via a 16-in.-diameter line at a point below the lowest large-diameter tray (No. 9).

The condenser associated with the Absorber is identical with the Uranium and Acid Concentrator Condensers described in Subsection F2.

2. Vacuum Nitric Acid Fractionator (12,19)

At the time of this writing, design and fabrication of the Vacuum Nitric Acid Fractionator was not complete. However, preliminary drawings and design specifications for the installation had been prepared. Specified major equipment pieces included a fractionator and condenser, with evacuating equipment, plus four Class II tanks. Plans also included a new building (340 sq. ft. of floor area, 45 ft. high) on the north side of the Acid Storage Vault for housing this equipment.

The fractionator was specified to include an insulated fractionating tower and reboiler, to be contact maintained, and to be fabricated according to Class I vessel specifications. A bottom flash zone pressure not to exceed 160 mm. of Hg (absolute) and a reboiler designed for nitric acid on the tube side were also specified.

H. CENTRIFUGES (1,17) (See Fig. XIII-12 and Fig. XIII-13.)

Two types of Bird solid-bowl, 48-in.-diameter centrifuges are used in the Purex process: (a) the solid-liquid centrifuges (G-E2 and G-E4) for clarification of dissolver solution prior to its make-up into HAF, and (b) the three-phase (solid-liquid-liquid) centrifuges (G-G3, G-G4, G-R3, and G-R4) for removal of suspended aqueous solutions and solids from washed organic streams.

1. General Description

The centrifuges are all similar in design and construction except for differences necessitated by the liquid-liquid-solid separation required of those used for solvent recovery. Principal components of a machine include (a) a solid cylindrical bowl, sized for a maximum holdup of 90 gallons, (b) a vertical spindle from which the bowl is axially suspended, (c) an electric motor, direct-connected to the spindle, which rotates the bowl, and (d) an outer cylindrical case which encloses the rotating bowl. These components are rigidly supported by a structural steel frame measuring approximately 7 ft. by 10 ft. by 13 ft. high. The entire assembly is designed for remote operation and maintenance. All parts in contact with process solutions or fumes are stainless steel.

The centrifuge bowl measures 48 in. I.D. by 24 in. high and is open at the top except for an annular 34-in.-I.D. overflow lip. Three horizontal annular baffles, 35 in. I.D., divide the bowl into compartments. The bowl is of all-welded construction and is fabricated according to specifications for Class I vessels.

Important centrifuge auxiliaries include a hydraulically operated skimmer, for reducing the liquid holdup in the rotating bowl; a hydraulically operated plow, for dislodging centrifuged solids from internal bowl surfaces; and the bowl spray, for dislodging or washing down the solids.

In operation, centrifuge feed is fed to the bottom of the rotating bowl and flows to the bowl wall. Over an extended period of operation, solids collect on the bowl wall while liquids escape to the centrifuge case, either over the bowl lip or through specially designed passages, for the aqueous phase of a solvent centrifuge. Liquid held up in the rotating bowl is removed by operation of the skimmer. Solids are removed by dislodging with the plow or spray, slurrying, and jetting.

2. Electrical Features

A 50-hp., 550-volt, 75-cycle, two-speed electric motor drives the centrifuge basket at its maximum safe speed of 1450 r.p.m. to give an effective centrifugal force at the inside diameter of the bowl of 1430 G (1430 times the force of gravity), or at a reduced speed of 750 r.p.m. Power of this voltage and frequency is supplied by motor-generator sets and was selected in order to operate at the maximum centrifugal force; with the usual power supply (e.g., 440-volt, 60-cycle), motor design would limit this operation to an undesirably low speed (1150 r.p.m.) or to a speed too high to be safe (1750 r.p.m.) Under emergency conditions the centrifuges can be operated with the normal 440-volt, 60-cycle power supply, but at reduced speed (1150 r.p.m.).

Braking from the centrifuge slow speed (750 r.p.m.) to a stop is accomplished by D. C. excitation of the motor field.

3. Liquid-Liquid Centrifuge

As shown in Fig. XIII-13, the solvent-treatment centrifuge is arranged for liquid-liquid-solid separation with continuous discharge of two liquid streams and intermittent clean-out of deposited solids. Outlet passages and overflow weirs for the heavy liquid are contained in the 1-1/2 in. thick overflow lip, connecting to the interior of the bowl through 1/2-in. holes drilled tangent to the bowl wall. The light liquid overflows the major bowl-overflow lip at the 34-in. diameter. The heavy-liquid overflow weir is at approximately 35-in. diameter and is adjustable by changing the length of insert sleeves. Flinger rings for both liquid streams are attached to the outer circumference of the basket. These rings deliver the liquid streams into separate compartments within the centrifuge case. The light-liquid compartment is separated from the heavy-liquid compartment by an intermediate space called the air case. The baffles enclosing the air case are spaced approximately 0.1 in. from the flinger rings on the basket. An air-circulating line vents the light-liquid discharge duct back to the air case. The heavy-liquid discharge line is vented to the vessel-vent header. Liquid-outlet ducts are rectangular and tangential to the case wall. The ducts terminate in a 4-in. nozzle for the light liquid and a 3-in. nozzle for the heavy liquid.

I. PLUTONIUM CONCENTRATORS AND PRODUCT REMOVAL VESSELS (6)

Equipment for further processing the plutonium product from the 2B Column includes the stripping and concentration equipment in L Cell and the equipment associated with the loading out of plutonium in the PR Room. In L Cell, the Plutonium Stripper, the No. 1 and No. 2 Plutonium Concentrators with associated condensers, and the Plutonium Receiver are arranged and supported as a single structural unit which is designed for remote maintenance. The Plutonium Sampler Tanks, the Vacuum Tank with its jet and condenser, the PR Head Tank, and facilities for loading the PR Can are located in the PR Room. With the exception of the PR Head Tank and the PR Can (and container), all of these are Class I vessels, although none of them are individually designed for remote maintenance. Also, most of these vessels are characterized by unusual geometry in comparison to other Purex-Plant equipment because of criticality considerations.

1. Plutonium Stripper

The Plutonium Stripper is a 28-ft.-high tower for the removal of volatile material from the plutonium feed stream. Preliminary concentration of the plutonium solution is obtained by evaporating a portion of the stream to provide vapor for the stripping section. The tower assembly consists (from the bottom up) of the boiler, the stripper, and the de-entrainment section. The vertical-tube boiler has thirteen tubes (1 in. O.D. by 6 ft. long) inside a 6-in.-I.P.S. steam shell. The boiler is connected top and bottom to a 6-in.-I.D. by 9-ft.-high disengaging section. The stripper (7.0 in. I.D. by 9-1/2 ft. high), containing an 8-ft.-deep bed of 1-in. stainless-steel Raschig rings, is set above the disengaging section. The feed stream enters the top of the stripping section onto a distributor plate above the packing.

The de-entrainment section above the stripper consists of two parallel 7-in.-I.D. by 4-ft.-high cylinders packed 3 ft. deep with 1-in. stainless-steel Raschig rings.

2. Plutonium Concentrators

Two similar concentrators are used for concentration of the plutonium stream and for re-evaporation of condensate if necessary for decontamination before cribbing.

The Plutonium Concentrator is 24 ft. high. It consists of boiler, disengagement section, and de-entrainment section. The thirteen-tube boiler is identical to the stripper boiler (Subsection I1) except for the orientation of the steam nozzle. The boiler is connected top and bottom to the 6-in.-I.P.S. by 6-ft.-high disengaging section. Two parallel, 7.0-in.-I.D. by 8-ft.-high, de-entrainment sections surmount the disengaging section. De-entrainment sections are packed 7 ft. deep with 2-in. stainless-steel Raschig rings.

3. Plutonium Condensers (See Fig. XIII-10)

Condensers E-L5 and E-L8 condense the overhead vapors from the concentrators. Condenser E-L12 condenses the steam from the vacuum jet for the Plutonium Vacuum Tank, TK-L11. Each condenser has ten 1-in. O.D. (12 B.W.G.) by 5-ft.-long tubes arranged in three passes in the 6-in.-I.P.S. shell.

4. Plutonium Receiver

Concentrated plutonium solution from the concentrator is collected in the Plutonium Receiver TK-L6. This vessel consists of two interconnected cylindrical, jacketed, 5-5/8 in. I.D. by 4-ft. 6-in.-long tanks. The tanks are connected to the bottom by a manifold containing approximately 8 ft. of 3-in. pipe. The top connecting manifold contains 5 ft. of 1-in. pipe.

5. Plutonium Sampler Tanks

Either of two identical Plutonium Sampler Tanks (TK-L9 and TK-L10) will receive the entire contents of the Plutonium Receiver (9.5 gal.). The tank is 5-5/8 in. I.D. by 10 ft. long. Nozzles and manifold extend another 5 ft. 2 in., making an over-all length of 15 ft. 2 in. for the vessel.

Each sampler tank is equipped with a recirculating pump for blending of the tank contents before sampling. The recirculating pump discharges to a sparger tube inside the tank. The sparger tube is an 11-ft.-long 3/4-in.-I.P.S. pipe perforated with 1/8-in.-diameter holes spaced 9 in. apart. This tube runs lengthways through the sampler vessel and is brought out to a 3/4-in. flanged nozzle.

6. Vacuum Tank

The Vacuum Tank (TK-L11) is an evacuated vessel used as a source of supply for vacuum to effect the transfer of liquid from the Plutonium Receiver to the Plutonium Sampler Tanks. The Vacuum Tank is also an auxiliary receiver tank for plutonium or waste solutions. The vessel is composed of two 5-5/8 in. I D. by 9-ft. 6-in.-long tanks. The tanks are connected at the bottom by a manifold of 3-in. pipe and at the top by a manifold of 1-in. pipe. The Vacuum Tank is evacuated by a steam jet exhausting to the Vacuum Tank Condenser E-L12.

7. PR Head Tank

Plutonium product solution is drained by gravity from the Plutonium Sampler Tank to the PR Head Tank, which is a calibrated 2-ft. length of 6-in.-diameter pyrex pipe, for measurement of the volume of solution to be placed in the PR Can.

8. PR Can and Container(7)

The PR Can, used for removal of concentrated plutonium product solution, is constructed of a 23-in.-long piece of 6-in. pipe with a 3-in.-pipe filling neck. The can is shielded with a 1/2-in.-thick layer of lead (with

4% cadmium) encased in a stainless-steel cover of 16 U. S. Standard Gage sheet. A solid polythene stopper is held in place with a spider clamp and hand screw.

The container or carrier for the PR Can is 22 in. O.D. by 2 ft. 8 in. high above a 6-in.-high base support and is made of 1/4-in.-thick plate. Internal guide rods center the PR Can on a pad shaped to the bottom of the can. The container has a removable cover of 1/8-in.-thick plate held in place by 4 screw clamps.

J. VESSEL-VENT SILVER REACTOR AND AUXILIARIES

The steam jets that service the Canyon vessel-vent system and the condenser-vent system discharge into the Vent Condenser E-F1, which is a standard large condenser described in Subsection F2. Vent gases (leaving the condenser) are sent through the Vent Heater E-F2, the Vent Silver Reactor T-F2, and Vent Filter F-F1, all of which are identical to the counterpart dissolver-cell equipment described in Subsections E5 (heater), E6 (reactor), and E7 (filter).

K. STRAINERS(6)

Strainers are used for removal of particulate matter from "cold" streams. In general, disc-type strainers are used in continuous streams and basket-type strainers in intermittent streams; in either case, a wide variety of sizes are used. All strainers are designed for 2-lb./sq.in. pressure drop at operating flow rates and to remove particles to 0.04 in. (ferrous sulfamate make-up strainer, ST-103, to remove particles greater than 0.008 in.).

The disc-type strainers strain during inward, radial flow between circular discs separated by thin spacers. For cleaning, the stack of discs may be rotated against stationary cleaner blades by an external handle. The solids then fall to the bottom of the case and may be removed through an outlet during inoperative periods. A typical disc-type strainer is shown in Figure XIII-15.

A typical basket-type strainer consists of a cylindrical stainless-steel filter body containing a stainless-steel wire mesh basket. Liquid flows into the basket from the top; the basket is removed from the case for cleaning.

L. WATER DEMINERALIZER

Principal Demineralizer equipment pieces include four exchanger tanks and two tanks for the storage of the acid and caustic required for Demineralizer regeneration. The tanks are of rubber-lined carbon steel with interconnecting plastic piping. The four exchanger tanks are arranged in two parallel lines, each line including one tank for cation exchange

and one tank for anion exchange. The cation-exchange tank is 6 ft. O.D. by 10 ft. 9 in. high and contains a 12-in. depth of carbon filtering medium under a 4-ft. 5-in. depth of cation-exchange resin. The anion-exchange tank is 4 ft. 6 in. O.D. by 7 ft. 4 in. high and contains a 2-ft. 6-in. depth of anion-exchange resin. All exchanger tanks have dished heads and are designed for 100-lb./sq.in.ga. working pressure.

REFERENCES

(1) Purex Facility -- Canyon Rotating Equipment Design Criteria -- Item X-5. Centrifuge Assemblies. R. C. Hollingshead, H.A.P.O. 1-16-53.

(2) Purex Facility -- Mechanical Design Criteria for Process Vessels -- Item X-A and B. W. S. Graves, H.A.P.O. 1-12-53.

(3) Purex Facility -- Miscellaneous Criteria Including the Arrangement and Dimensional Tolerances of Process Equipment, etc. -- Item XIII. J. C. Willi and M. L. Oldfather, H.A.P.O. 1-12-53.

(4) Purex Facility -- Inner Area Services Design Criteria -- Item XXVI-1. Solvent Recovery and Storage -- 276-A; Acid Condensate and Laboratory Waste Storage Vault -- 202-A. W. J. Mundt, Vitro Corporation. 12-28-52.

(5) Purex Facility --Inner Area Services Design Criteria -- Item XXVI-2. Chemical Tank Farm 211-A; Recovered UNH Storage 203-A. F.H. Ames, Jr., H.A.P.O. 12-22-52.

(6) Blue Print File. (For selected references to equipment drawings in the Blue Print File, see Table XI-3 of this Manual.)

(7) Class I Equipment As-Built Drawings. (For drawing numbers for specific equipment pieces, see Table XI-2 of this Manual.)

(8) H-2-52967 PR Can and Stopper

(9) H-2-52984 PR Can Container

(10) HW-26463 Purex Facility -- Process Equipment Design Criteria, Part I -- Item VII. W. B. Webster. 1-7-53.

(11) HW-26582 Purex Facility -- Process Equipment Design Criteria, Part II, Calculations -- Item VII. C. C. Randall and W. S. Graves. 1-31-52.

(12) HW-31334 Purex Low Pressure Nitric Acid Fractionator. E. Doud and D. J. Stoker. 3-24-54.

(13) HWS-5506 Purex Facility -- Specification for Class I Vessels. Vitro Corporation. 5-13-53.

(14) HWS-5507 Purex Facility -- Specification for Class II Vessels. Vitro Corporation. 6-22-53.

(15) HWS-5521 Purex Facility -- Specification for Procurement and Erection of Tanks for 203-A and 211-A Facilities. Vitro Corporation. 7-29-53.

(16) HWS-5535 Purex Facility -- Specification for Erection of Special Process and Mechanical Equipment. Vitro Corporation. 1-20-54.

(17) HWS-5538 Purex Facility -- Specification for Solids-Liquid and Liquid-Liquid Centrifuge Assemblies. Vitro Corporation. 1-23-53.

(18) HWS-5540 Purex Facility -- Specification for Critical Class I Vessels. Vitro Corporation. 1-15-53.

(19) HWS-5636 Design and Fabricate Specification -- Purex Nitric Acid Fractionator. L. L. Zahn, H.A.P.O. 11-4-54.

(20) HWS-5802 Purex Facility -- Specification for Special Concentrators. H.A.P.O. 1-17-55.

LIST OF TABLES AND FIGURES

TABLE XIII-1	AQUEOUS MAKE-UP TANKS
FIGURE XIII-1	5000-GAL. TANK WITH COIL
FIGURE XIII-2	1725-GAL. TANK WITH COIL
FIGURE XIII-3	15000-GAL. OVAL TANK
FIGURE XIII-4	2AF TANK
FIGURE XIII-5	IOF TANK
FIGURE XIII-6	DECANTER
FIGURE XIII-7	DISSOLVER CELL EQUIPMENT
FIGURE XIII-8	LARGE CONCENTRATOR
FIGURE XIII-9	LARGE CONCENTRATOR AND CONDENSER--PERSPECTIVE CUTAWAY
FIGURE XIII-10	CONDENSERS
FIGURE XIII-11	NITRIC ACID ABSORBER
FIGURE XIII-12	CENTRIFUGES
FIGURE XIII-13	LIQUID-LIQUID CENTRIFUGE--PERSPECTIVE AND CUTAWAY
FIGURE XIII-14	PLUTONIUM VESSELS
FIGURE XIII-15	DISC-TYPE STRAINER

TABLE XIII-1

AQUEOUS MAKE-UP TANKS

Tank No.	Tank Name	Size[a]	Material of Construction	Coil Area, Sq.Ft.	Agitator	Strainer
101	$Fe(NH_2SO_3)_2$ Adjustment Tank	Medium	Stainless steel	--	Yes	Yes
103	$Fe(NH_2SO_3)_2$ Make-Up Tank	Medium	S.S.	65	Yes	Yes
104	$NaNO_3$ Make-Up Tank	Large	Carbon steel	40	Yes	Yes
105	Wash Make-Up Tank	Large	S.S.	255	Yes	Yes
106	$NaNO_2$ Make-Up Tank	Medium	Carbon steel	75	Yes	Yes
107	Na_2CO_3 Make-Up Tank	Large	Carbon steel	--	Yes	Yes
201	Dissolver A Add Tank	Medium	S.S.	--	--	--
202	Dissolver B Add Tank	Medium	S.S.	--	--	--
203	Dissolver C Add Tank	Medium	S.S.	--	--	--
204	Waste Rework Add Tank	Medium	S.S.	--	Yes	Yes
205	Utility Add Tank	Medium	S.S.	--	Yes	Yes
206	NaOH Add Tank	Medium	S.S.	--	Yes	--
207	$NaNO_3$ Add Tank	Large	S.S.	--	--	--
208	Na_2CO_3 Add Tank	Large	S.S.	--	--	--
209	IBX Make-Up Tank B	Large	S.S.	--	Yes	--
210	IBX Make-Up Tank A	Large	S.S.	--	Yes	--
211	2AS Make-Up Tank A	Medium	S.S.	--	Yes	--
212	2AS Make-Up Tank B	Medium	S.S.	--	Yes	--
213	2BX Make-Up Tank A	Medium	S.S.	--	Yes	--
214	2BX Make-Up Tank B	Medium	S.S.	--	Yes	--
215	HNO_3 Meter Tank	Special[b]	S.S.	--	--	--
216	$Fe(NH_2SO_3)_2$ Meter Tank	Small	S.S.	--	--	--
217	2DF Add Tank	Small	S.S.	--	--	--
218	HAF Make-Up Add Tank	Small	S.S.	--	--	Yes
219	Utility $NaNO_2$ Add Tank	Small	S.S.	--	--	Yes
220	$NaNO_2$ Add Tank	Medium	S.S.	--	--	--
221	Head End Wash Add Tank	Medium	S.S.	--	--	Yes
222	HNO_3 Head Tank	Medium	S.S.	30	--	Yes
223	Demineralized Water Head Tank	Special[c]	Aluminum	--	--	Yes
324	Solvent Head Tank	Large	S.S.	--	--	Yes

Notes:

(a) Small size is 2 ft. O.D. by 4 ft. high. Medium size is 5 ft. O.D. by 5 ft. high. Large size is 8 ft. O.D. by 8 ft. high.
(b) 2 ft. O.D. by 2 ft. 6 in. high.
(c) 8 ft. O.D. by 12 ft. long, horizontal.

FIGURE XIII-1

5000-GALLON TANK WITH COIL

NOZZLES	
NUMBER	SIZE
2	27"
4	4"
16	3"

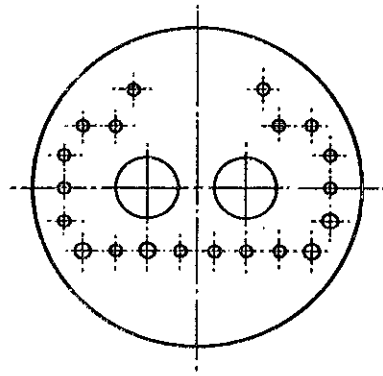

PLAN

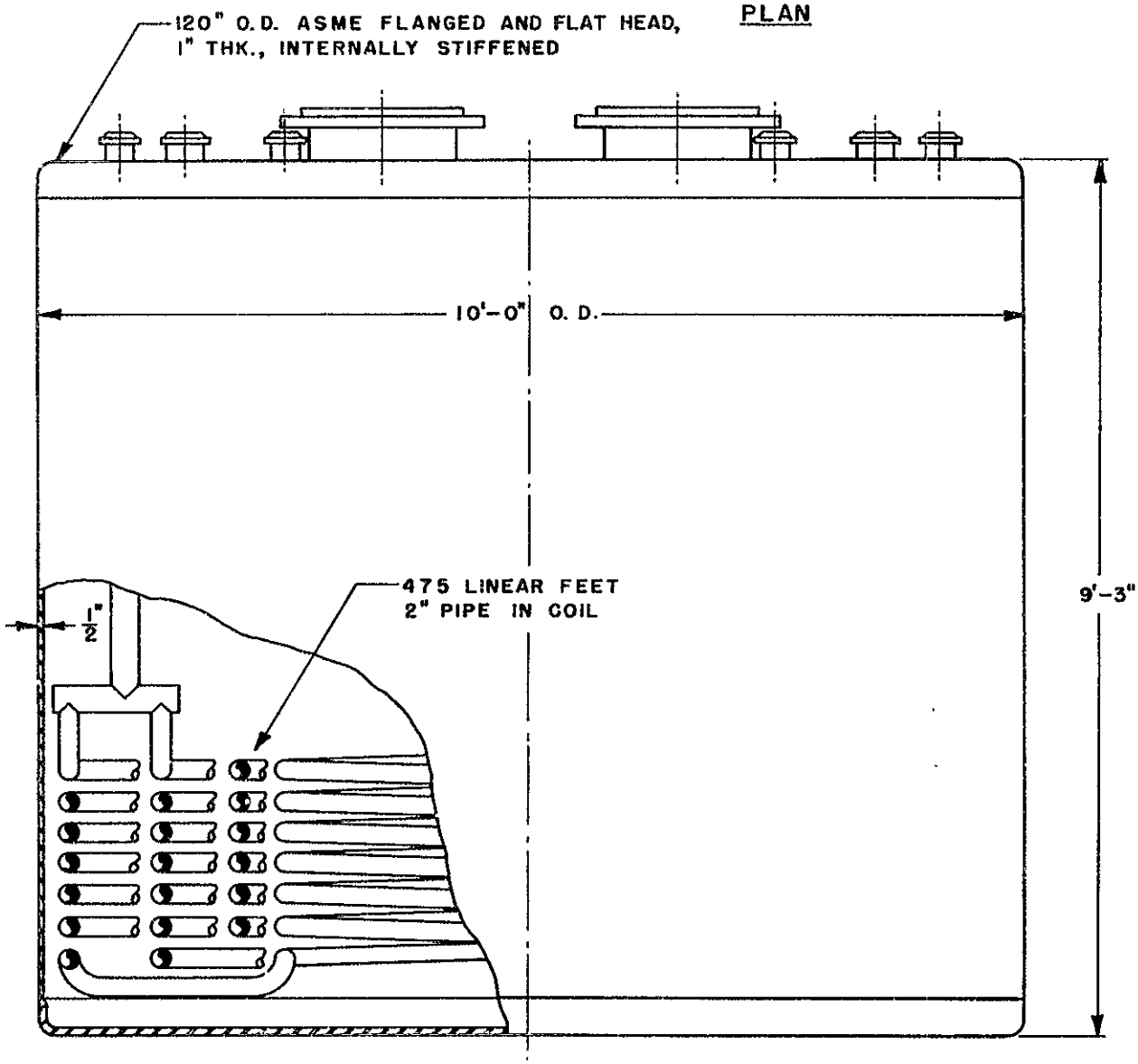

FIGURE XIII-2

1725 GAL. TANK WITH COIL

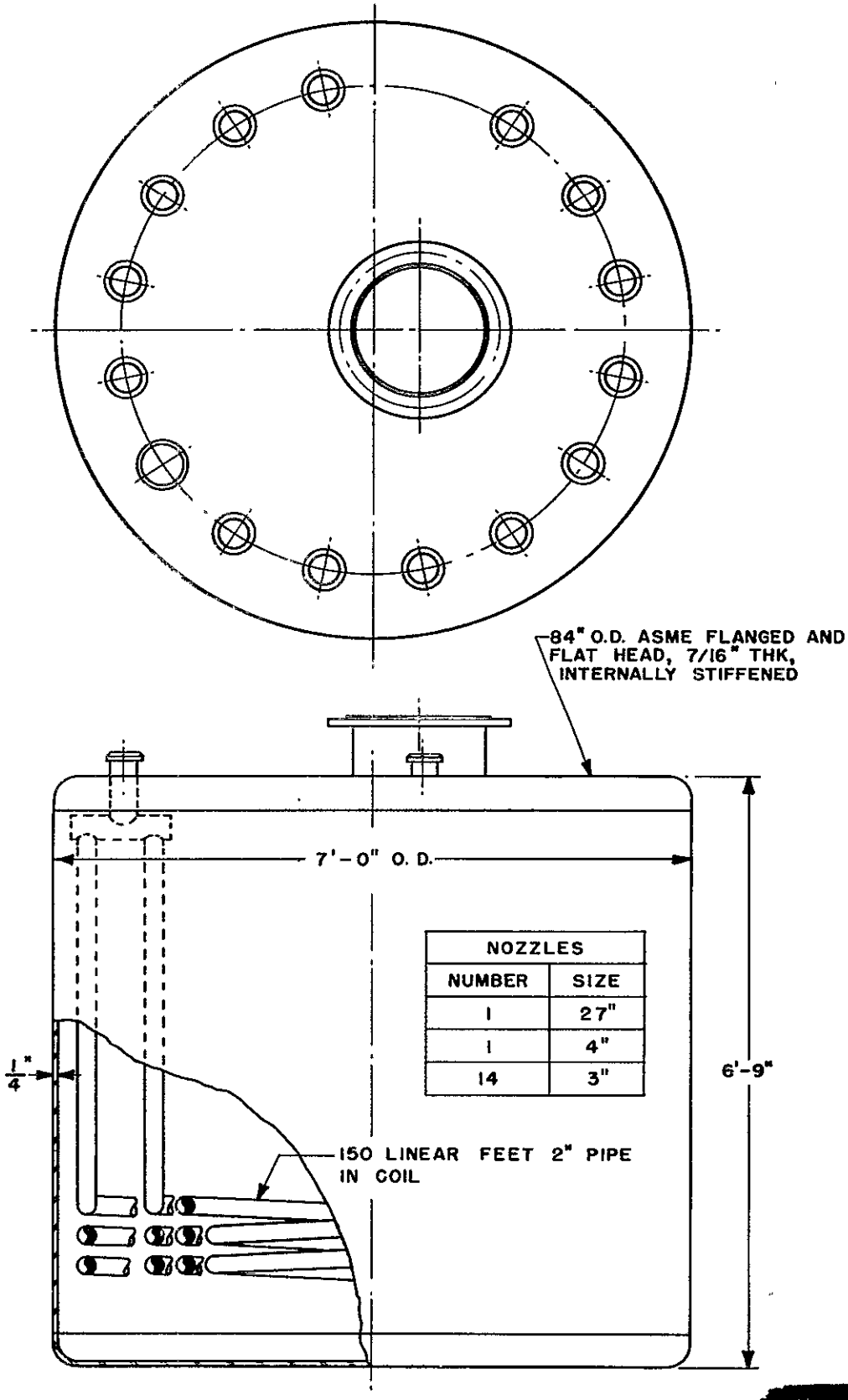

NOZZLES	
NUMBER	SIZE
1	27"
1	4"
14	3"

FIGURE XIII-3

15,000-GAL. OVAL TANK

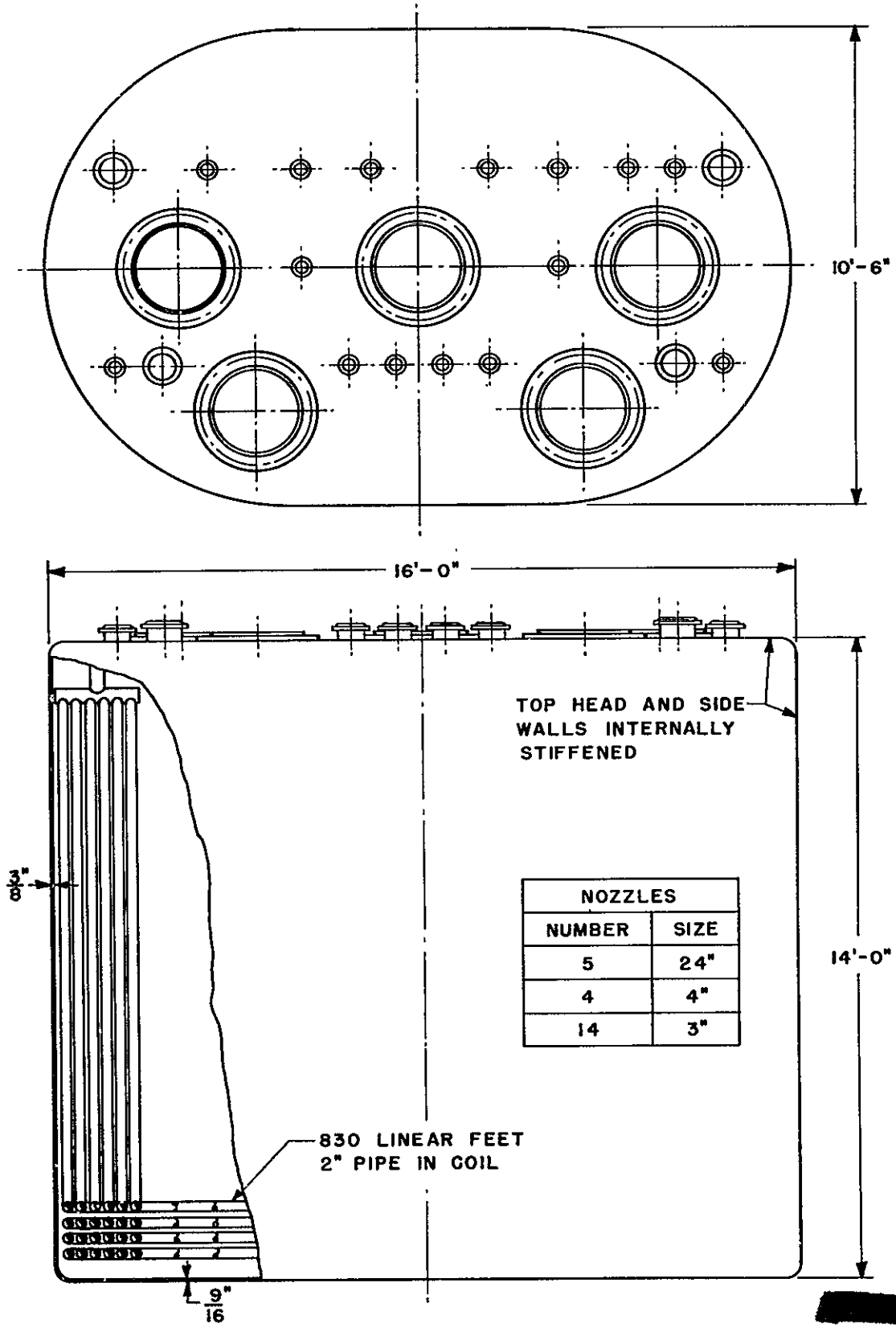

NOZZLES	
NUMBER	SIZE
5	24"
4	4"
14	3"

FIGURE XIII-4

2 A F TANK

NOZZLES	
NUMBER	SIZE
2	12"
1	10"
1	4"
2	3"
11	2"

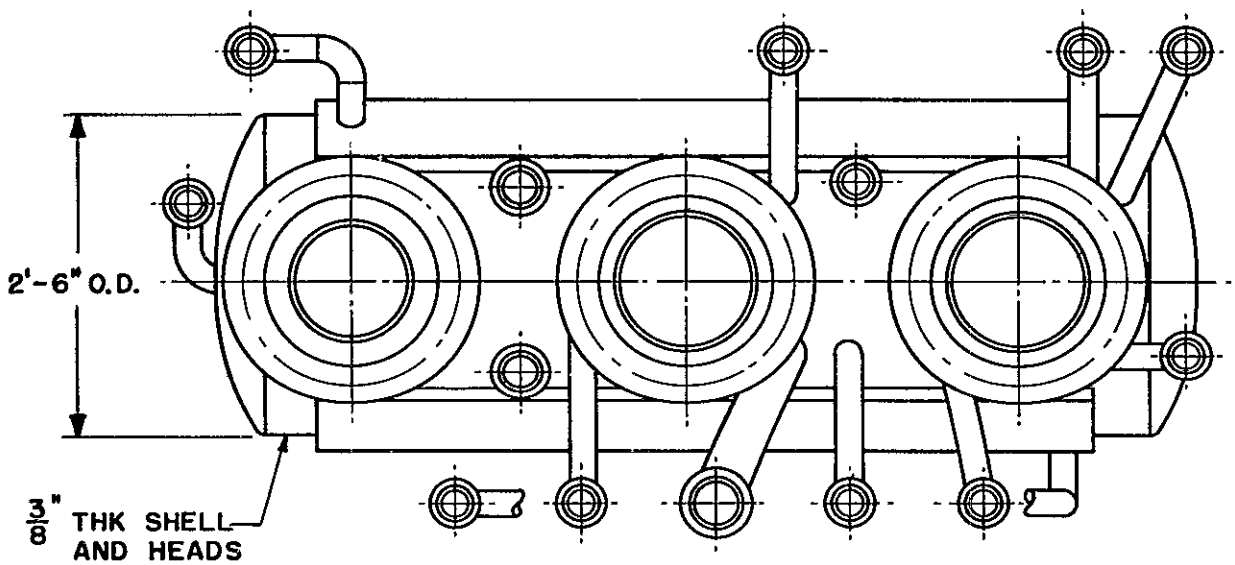

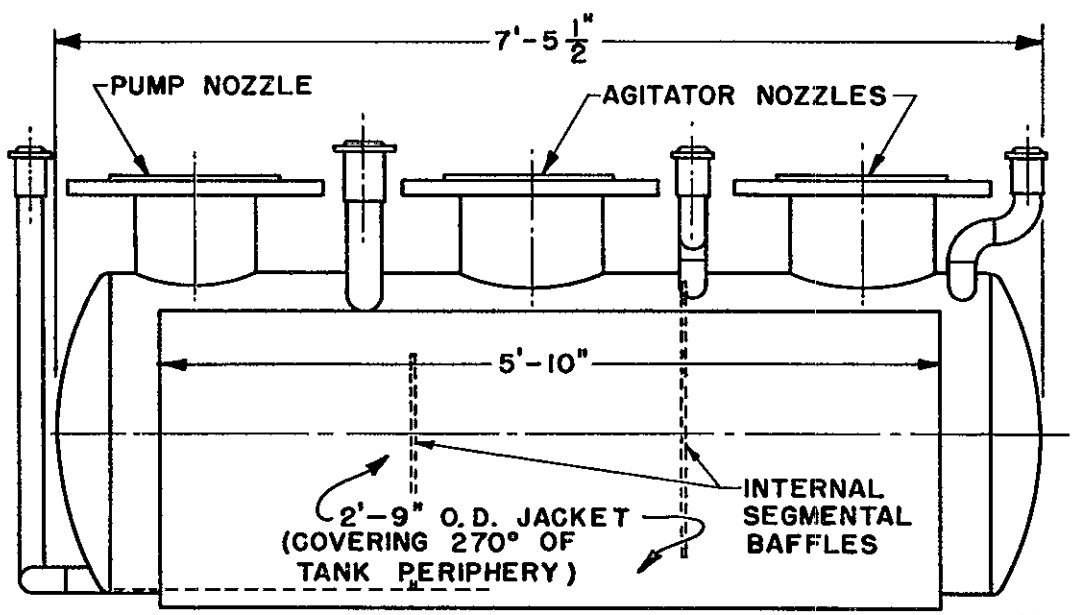

[redacted]

FIGURE XIII-5

IOF TANK

NOZZLES	
NUMBER	SIZE
2	24"
3	4"
17	3"

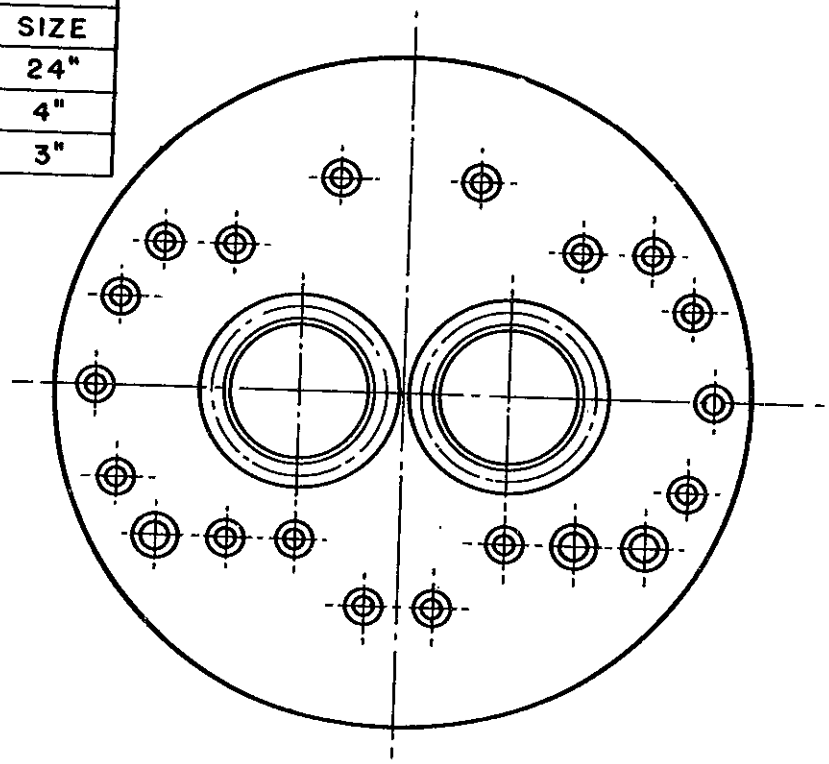

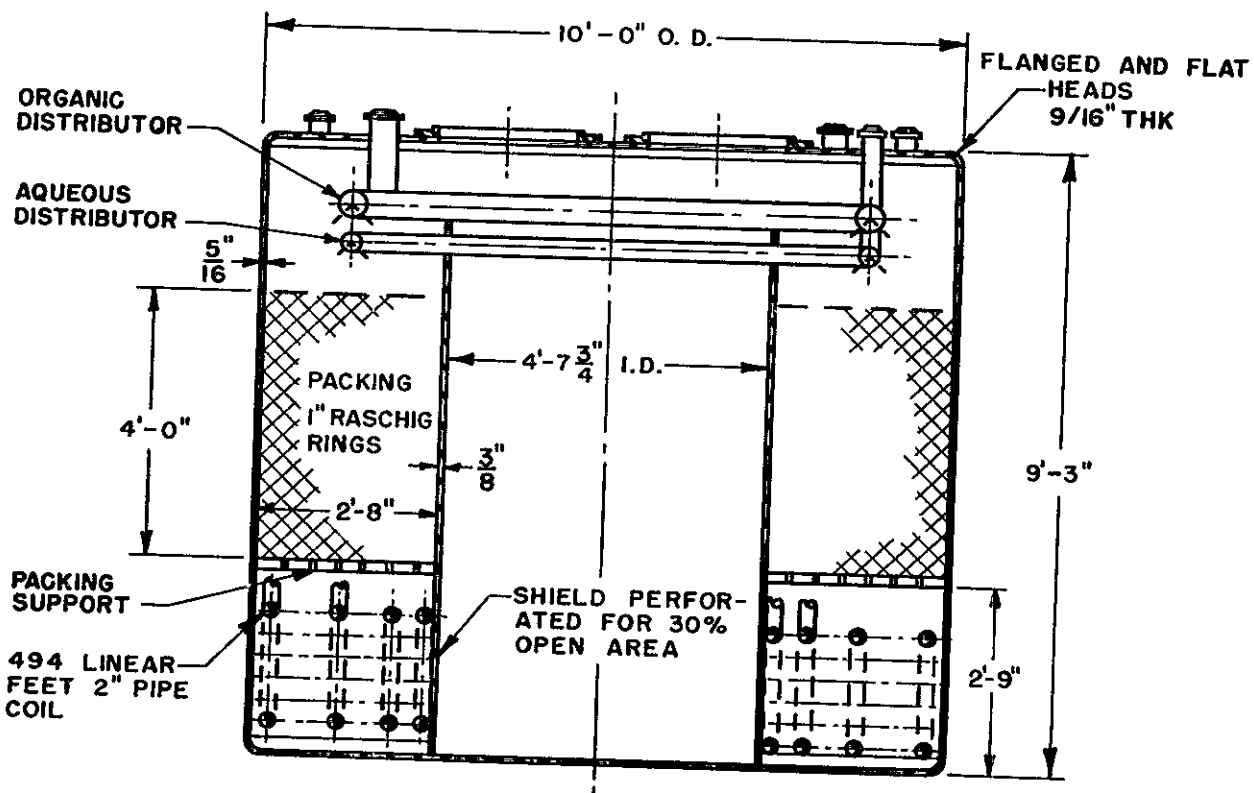

[redacted]

FIGURE XIII-6

DECANTER

NOZZLES	
NUMBER	SIZE
2	4"
2	3"
3	2"

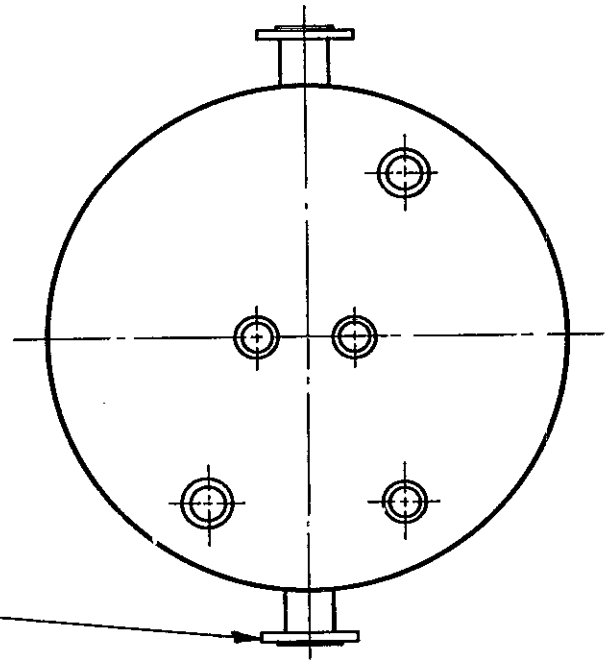

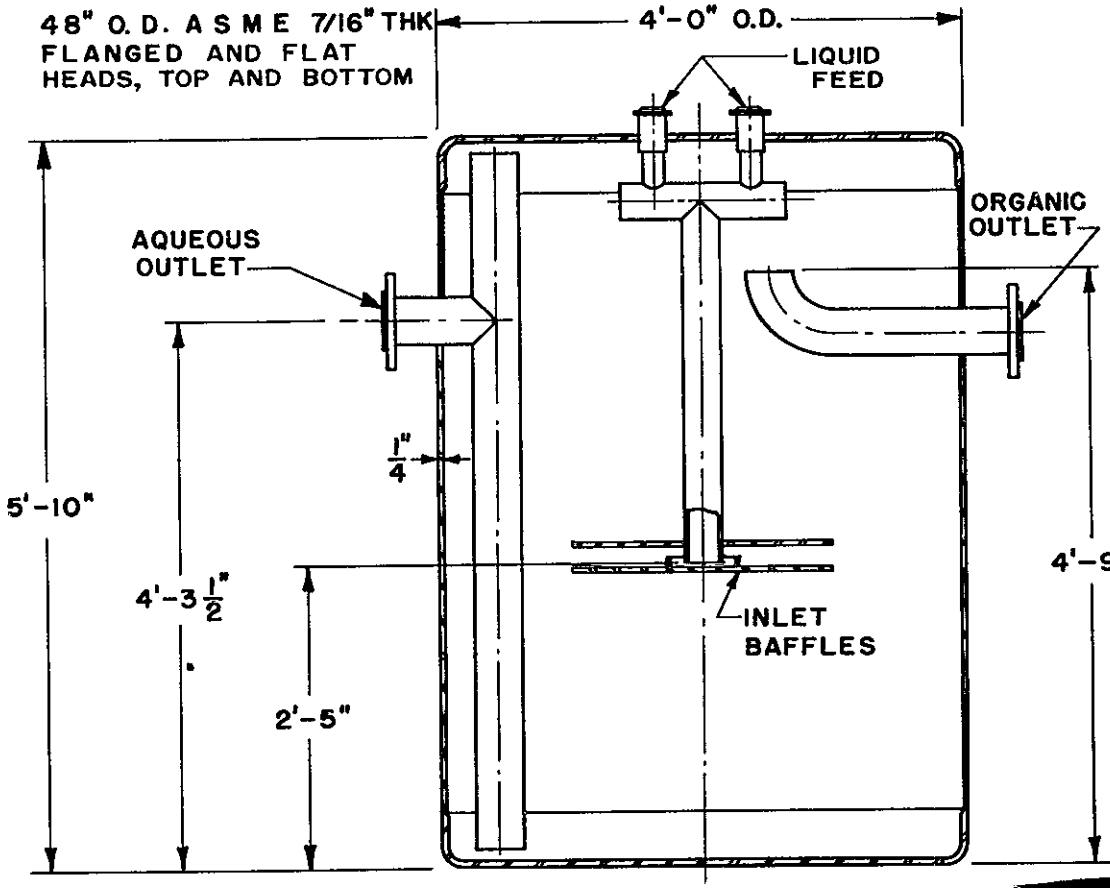

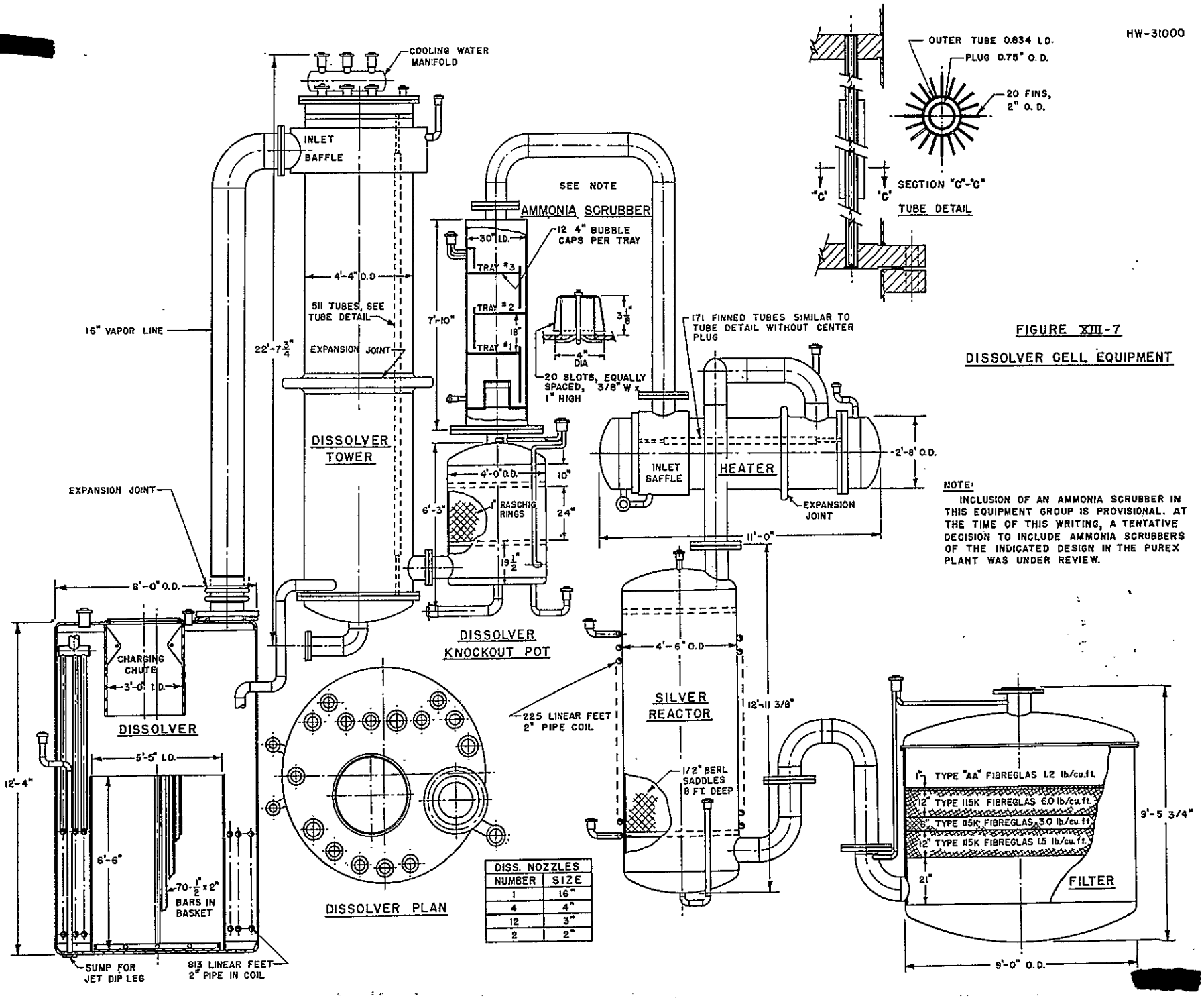

DISS. NOZZLES	
NUMBER	SIZE
1	16"
4	4"
12	3"
2	2"

FIGURE XIII-7

DISSOLVER CELL EQUIPMENT

NOTE:

INCLUSION OF AN AMMONIA SCRUBBER IN THIS EQUIPMENT GROUP IS PROVISIONAL. AT THE TIME OF THIS WRITING, A TENTATIVE DECISION TO INCLUDE AMMONIA SCRUBBERS OF THE INDICATED DESIGN IN THE PUREX PLANT WAS UNDER REVIEW.

FIGURE XIII-8

LARGE CONCENTRATOR

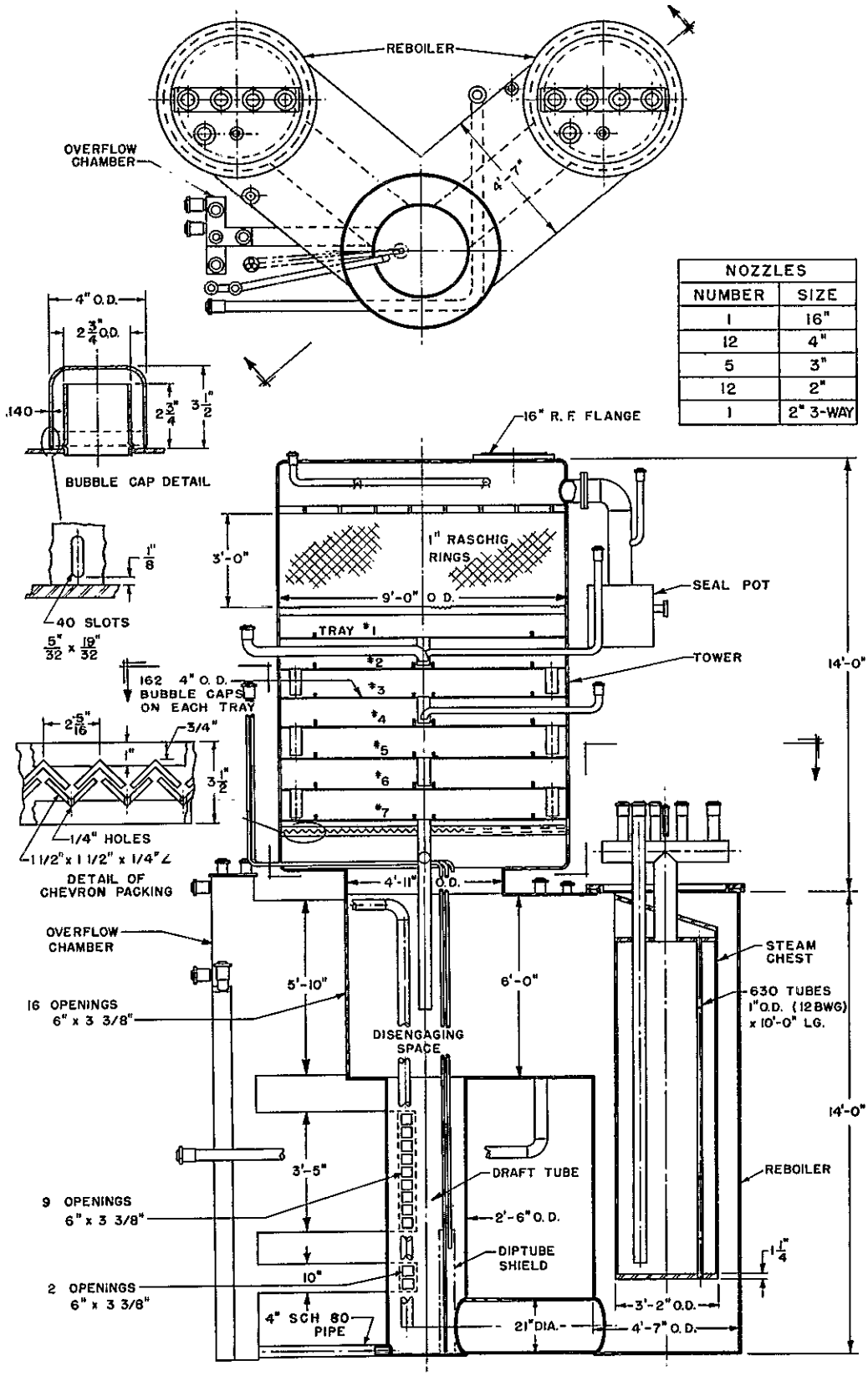

NOZZLES	
NUMBER	SIZE
1	16"
12	4"
5	3"
12	2"
1	2" 3-WAY

FIGURE XIII-10

CONDENSERS

NOZZLES	
NUMBER	SIZE
1	4" R.F. FLANGE
1	2" R.F. FLANGE
3	1½" R.F. FLANGE

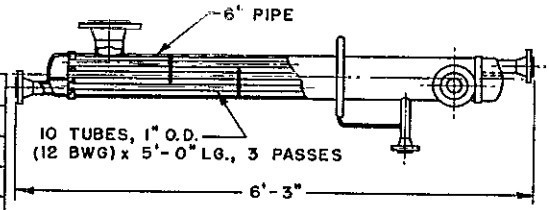

Pu CONDENSER

NOZZLES	
NUMBER	SIZE
1	16"
8	4"
2	3"
1	2"

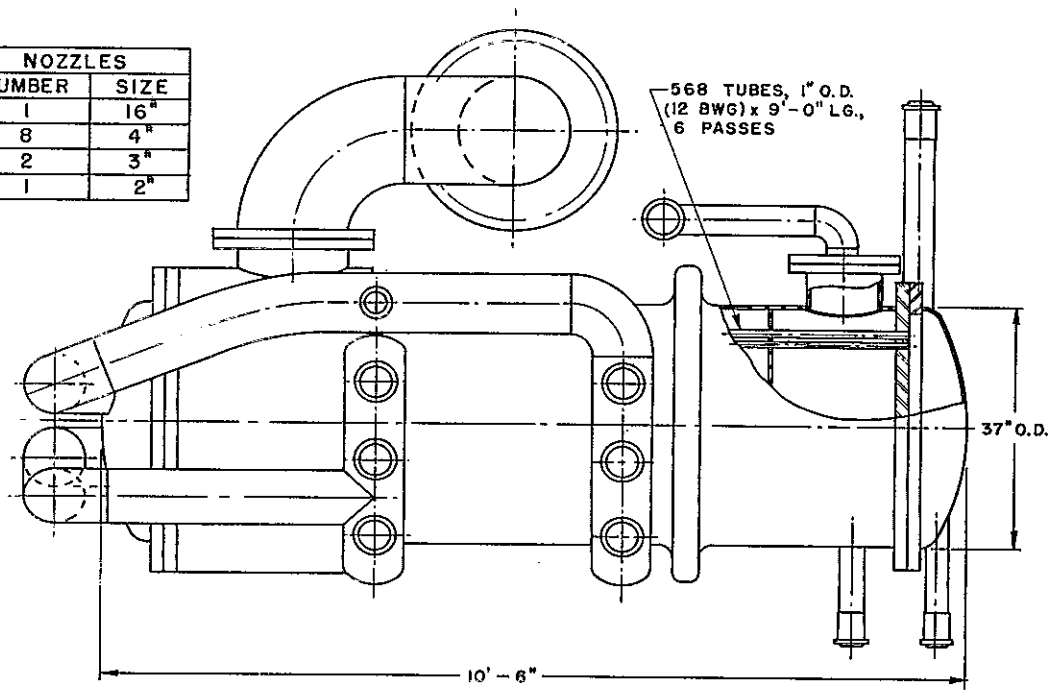

LARGE CONDENSER

NOZZLES	
NUMBER	SIZE
1	8"
3	4"
1	3"
2	2"

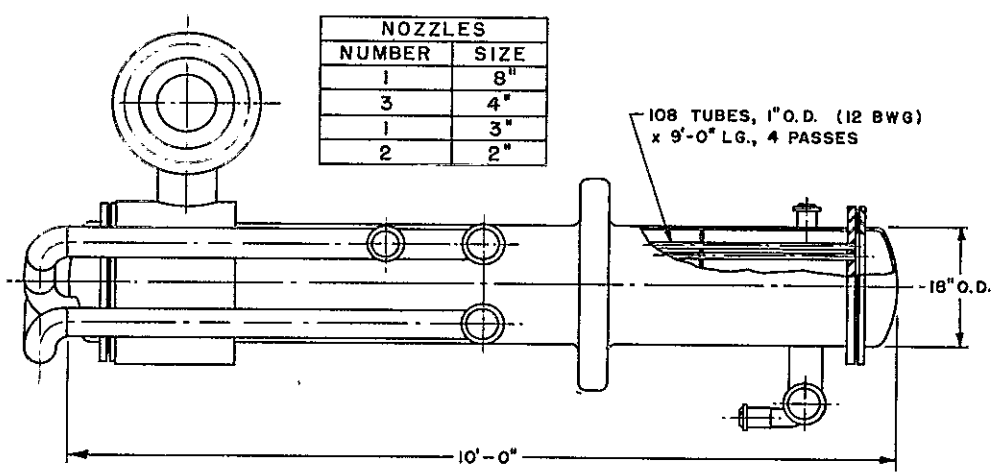

WASTE REWORK CONDENSER

FIGURE XIII-11

NITRIC ACID ABSORBER

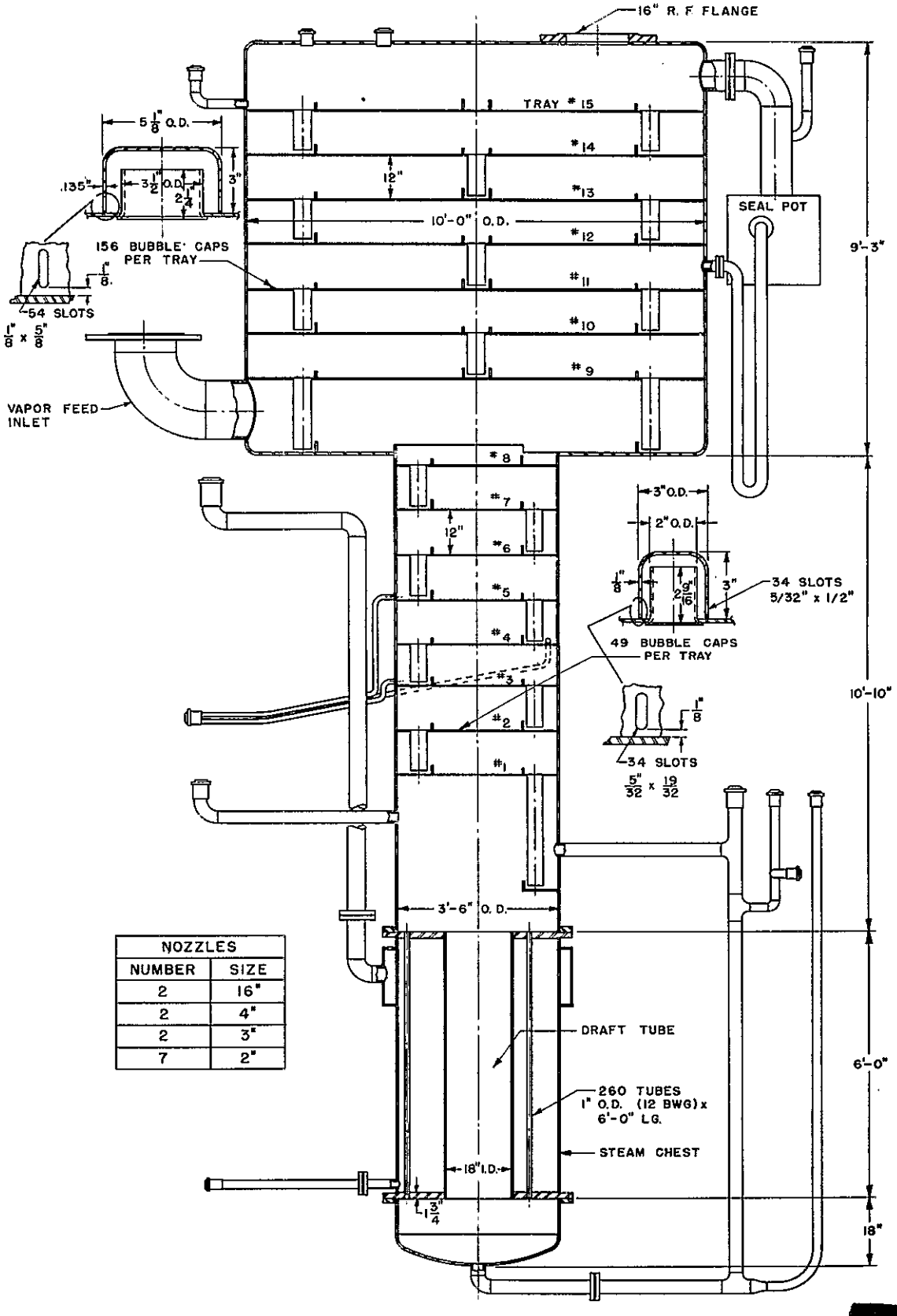

NOZZLES	
NUMBER	SIZE
2	16"
2	4"
2	3"
7	2"

FIGURE XIII-12

CENTRIFUGES

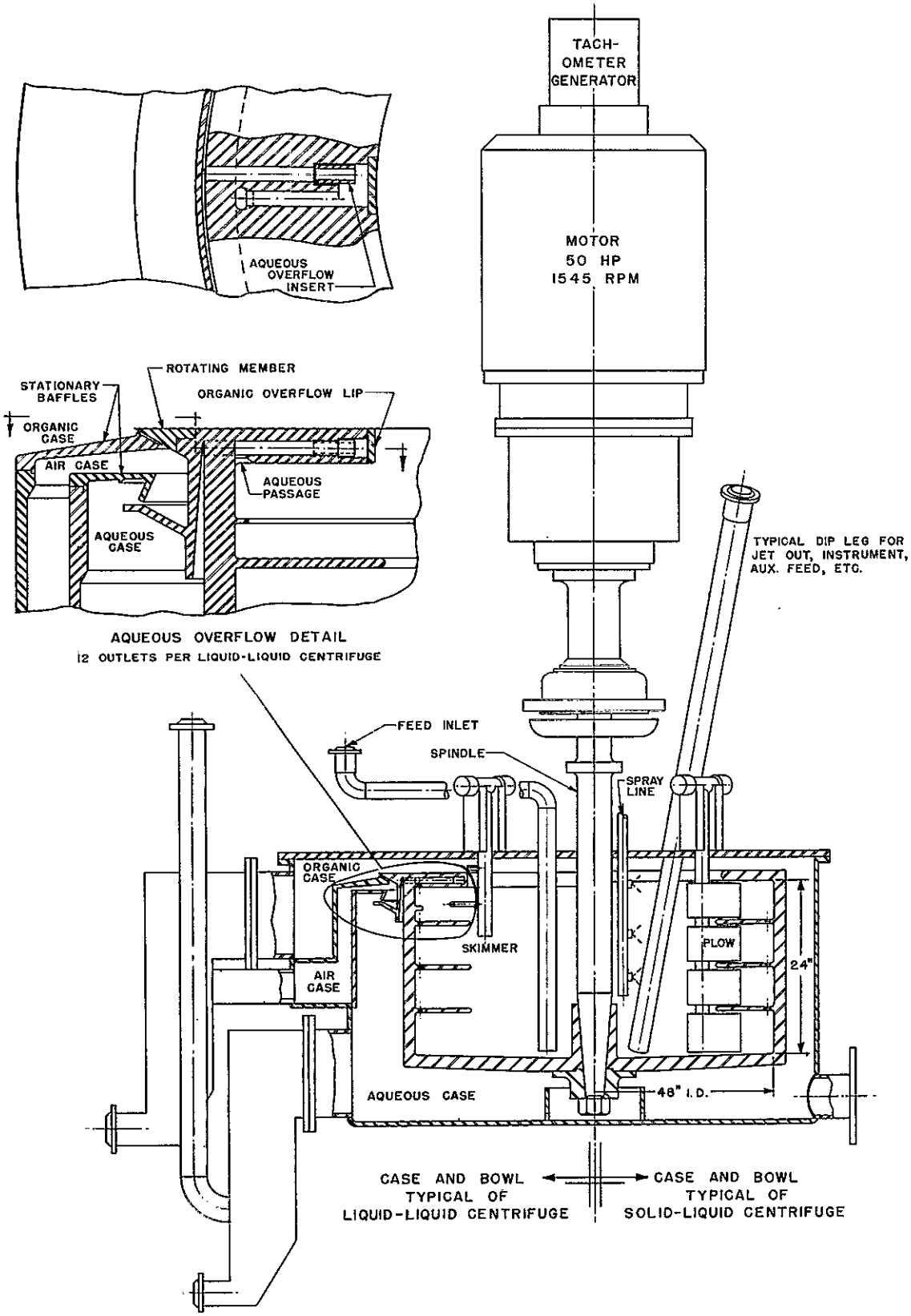

[redacted]

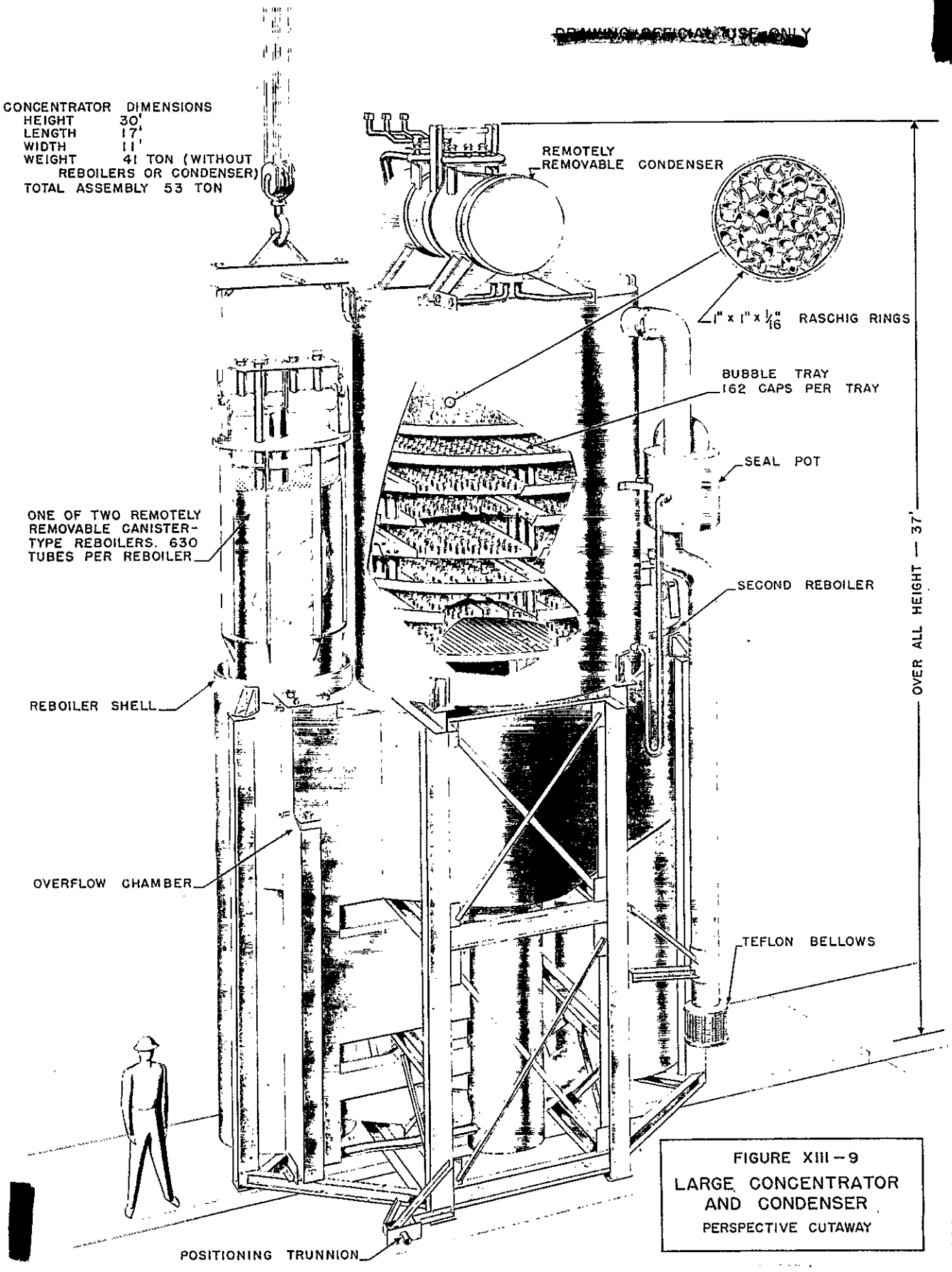

FIGURE XIII – 9
LARGE CONCENTRATOR AND CONDENSER
PERSPECTIVE CUTAWAY

FIGURE XIII-13
LIQUID - LIQUID CENTRIFUGE
PERSPECTIVE AND CUTAWAY

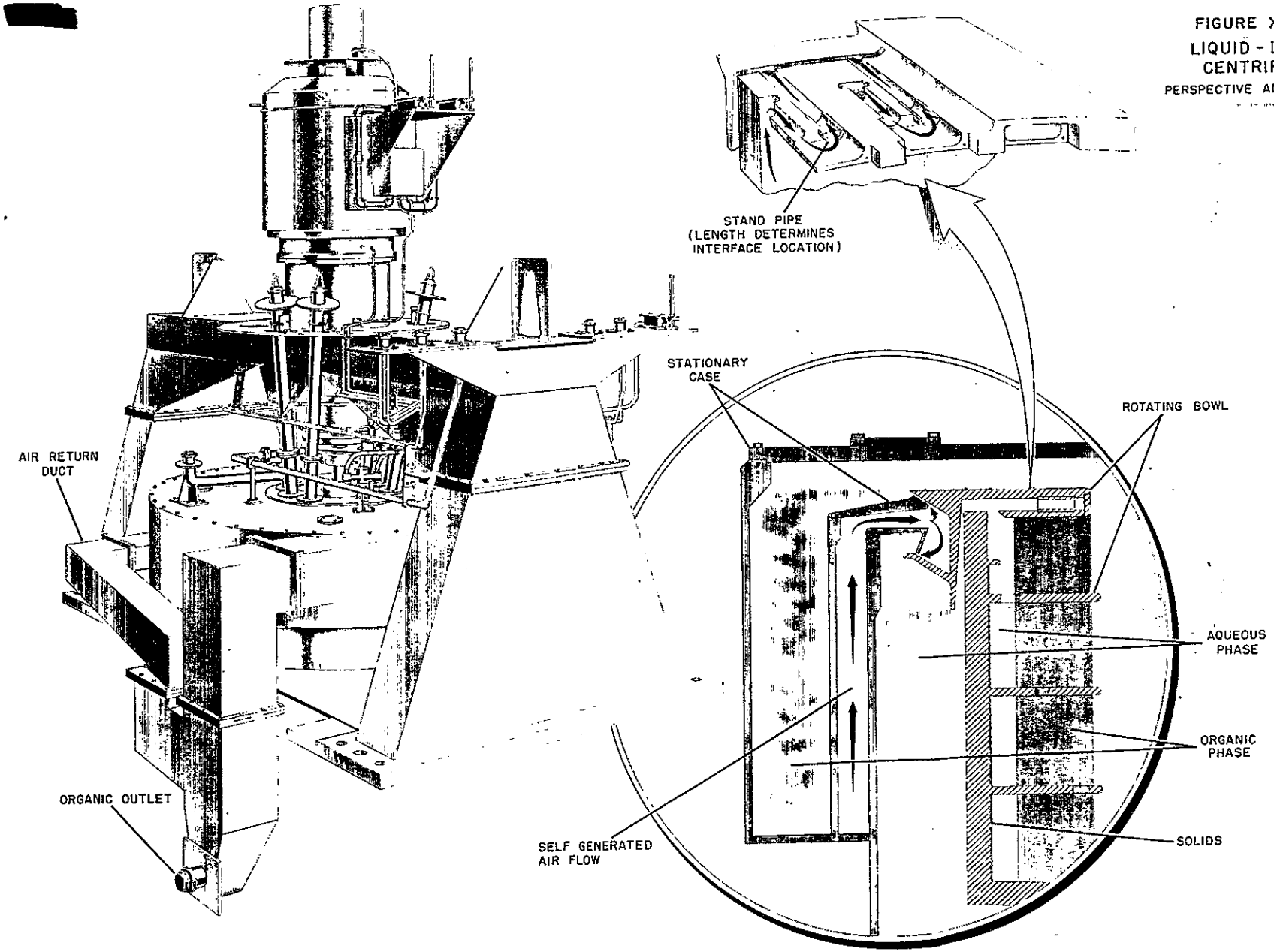

DRAWING OFFICIAL USE ONLY

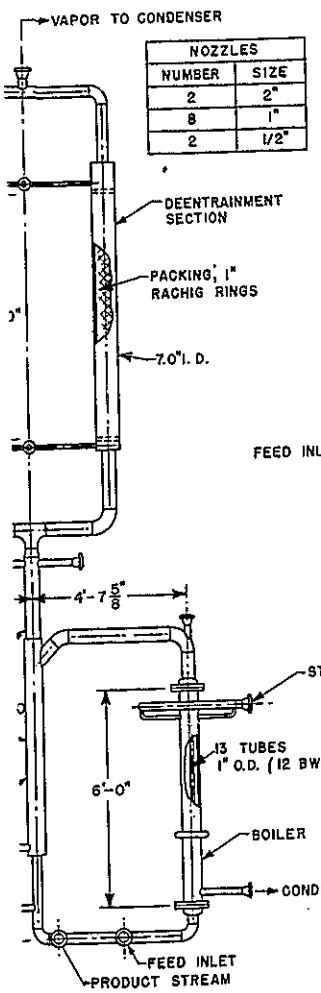

CONCENTRATOR

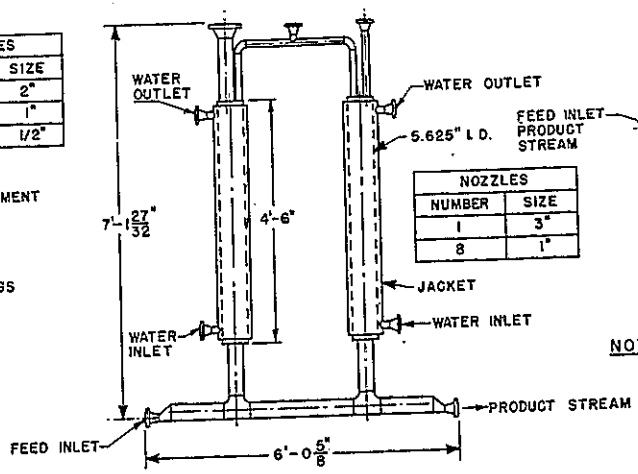

RECEIVER

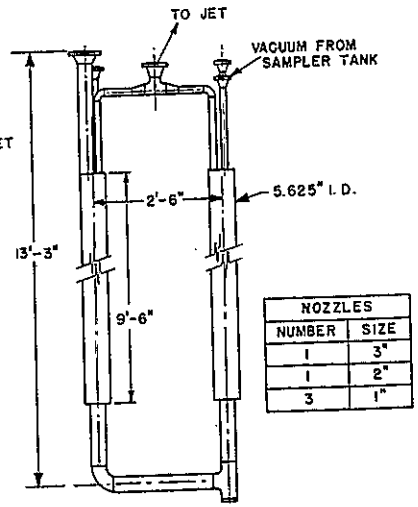

VACUUM TANK

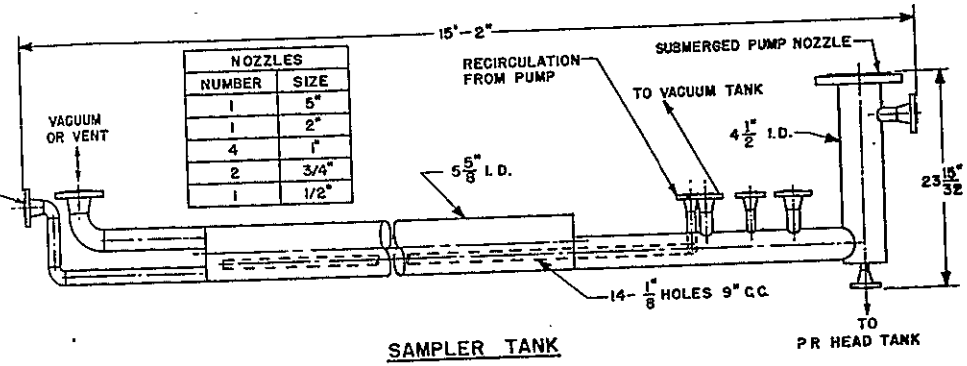

SAMPLER TANK

NOTE: DRAWINGS NOT ALL TO SAME SCALE.

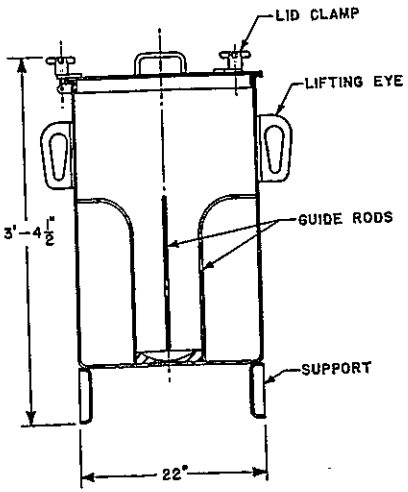

P R CAN CONTAINER

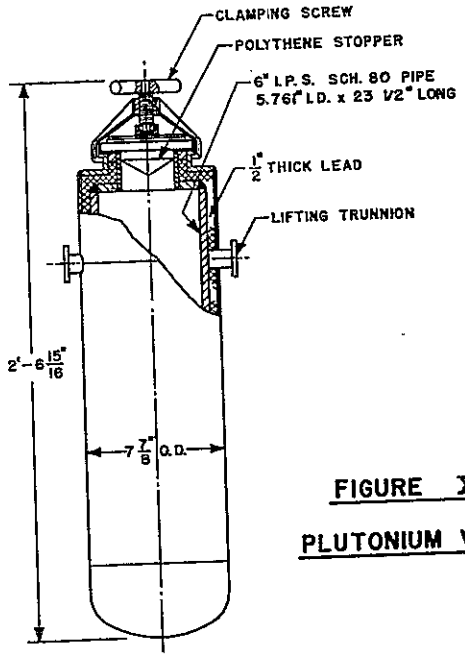

P R CAN

FIGURE XIII-14

PLUTONIUM VESSELS

[redacted]

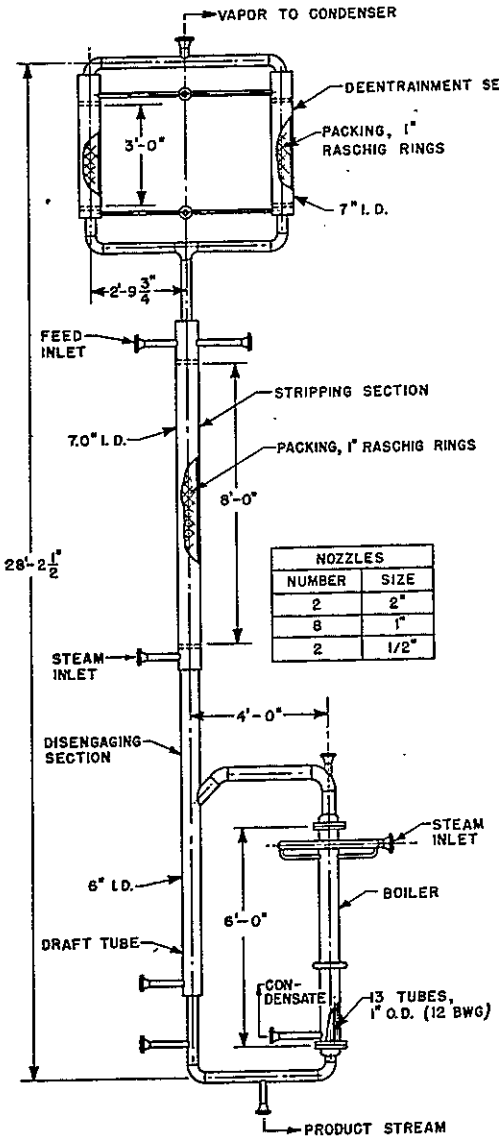

NOZZLES	
NUMBER	SIZE
2	2"
8	1"
2	1/2"

STRIPPER

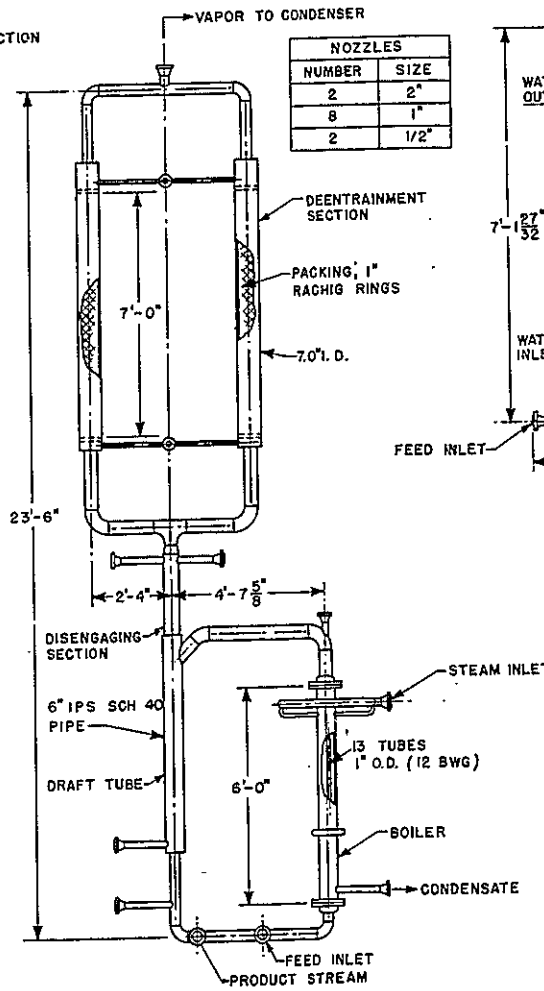

NOZZLES	
NUMBER	SIZE
2	2"
8	1"
2	1/2"

CONCENTRATOR

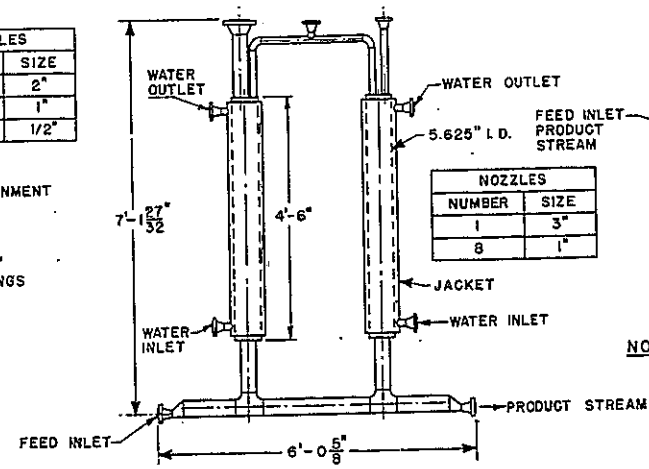

NOZZLES	
NUMBER	SIZE
1	3"
8	1"

RECEIVER

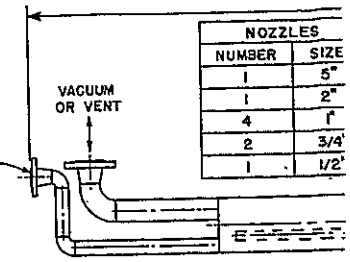

NOZZLES	
NUMBER	SIZE
1	5"
1	2"
4	1"
2	3/4"
1	1/2"

NOTE: DRAWINGS NOT ALL TO SAME SC

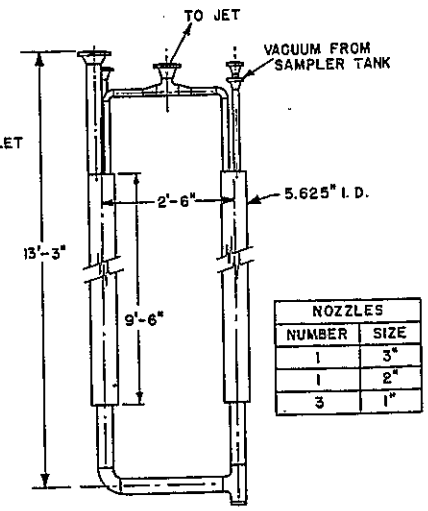

NOZZLES	
NUMBER	SIZE
1	3"
1	2"
3	1"

VACUUM TANK

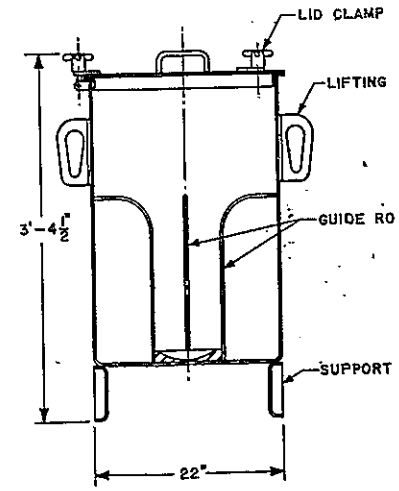

P R CAN CONTAINER

FIGURE XIII-15

DISC-TYPE STRAINER

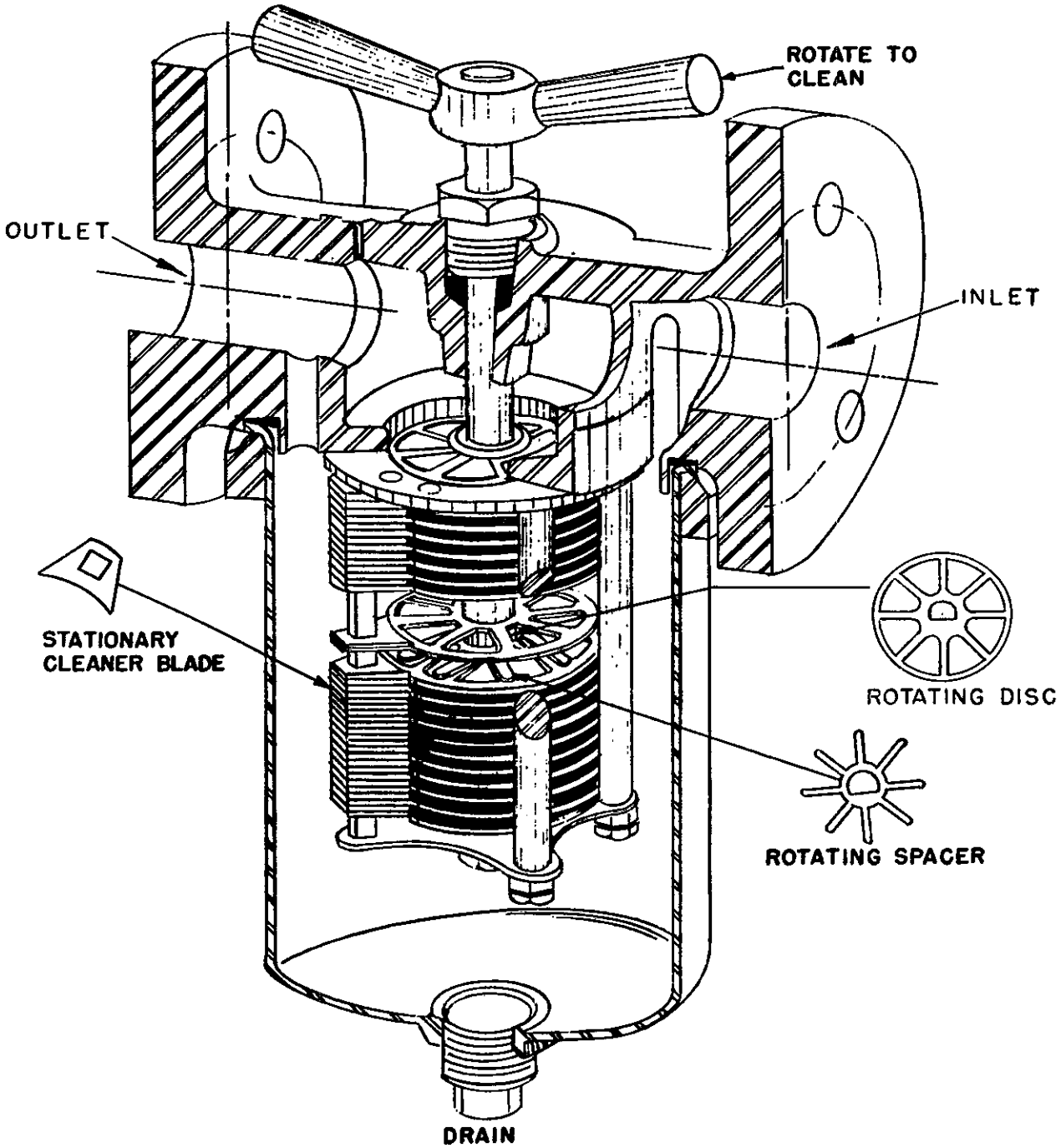

PART III: PLANT AND EQUIPMENT, continued

CHAPTER XIV. PUMPS, JETS, AND AGITATORS

CONTENTS Page

A. CANYON SERVICE PUMPS 1402

1. Introduction 1402
2. Basis of Selection and Design 1402
3. Deepwell Turbine Pumps 1403
   3.1 Principles of operation 1403
   3.2 Effect of process variables on pump characteristics .. 1403
4. Process Requirements 1403
5. Description of Production Units 1403

B. NON-CANYON SERVICE PUMPS 1406

1. Introduction 1406
2. Basis of Selection 1407
3. Standard Horizontal Centrifugal Pumps 1407
4. Self-Priming Centrifugal Pumps 1407

C. JETS 1408

1. Introduction 1408
2. Liquid-Transfer Jets 1408
3. Sampler Jets 1409
4. Gas-Transfer Jets 1409
5. Variable-Flow Jets 1409
6. Gang Valves 1410

D. AGITATORS 1412

1. Design Basis 1412
2. Description 1412
   2.1 Canyon agitators 1412
   2.2 Non-Canyon agitators 1412

REFERENCES 1413

LIST OF TABLES AND FIGURES 1414

CHAPTER XIV. PUMPS, JETS, AND AGITATORS

The transfer of liquids is effected in the Purex Plant by pumps and jets. Remotely installed and maintained deepwell turbine-type pumps were selected to function in Canyon areas and standard centrifugal pumps were chosen for non-Canyon areas. Steam jets, operated by sequence-controlled gang valves, are used as stand-bys for pumps, for exhauster service, for batch transfer of process solutions, for draining of sumps, and removal of heels from process vessels. Air-operated jets are used for sampling. Agitators are used for the blending of tank contents in both Canyon and non-Canyon areas.

A. CANYON SERVICE PUMPS

1. Introduction

Submerged, deepwell, turbine-type pumps are used in the Purex Canyon for transfer, column feeds and for recirculation. Twenty-seven pumps are employed for handling process solutions in the Canyon.

2. Basis of Selection and Design

The selection of pumps for service in the Canyon was based on the following requirements:

(a) Head-capacity characteristics: Pumps are required to meet a wide range of head and capacity conditions in the Processing Building. Heads range from 21 to 108 ft. of fluid and the required flow rates, at a 10-ton/day uranium processing rate, range from 10 to 200 gal./min.

(b) Materials of construction: Construction materials must resist corrosion and erosion by the pumped solutions.

(c) Life expectancy: A minimum expectancy of one year without maintenance is desired.

(d) Leakage: No leakage of radioactive solutions from the pump is tolerable.

(e) Flushing and draining: The pump must contain no pockets that are not flushable from the discharge line and must be completely drainable through the suction port.

(f) Strength: The pump must be strong enough to withstand impacts and strains imposed by remote handling equipment.

Multistage, vertical, submerged, deepwell turbine-type pumps were selected for Canyon service.

3. Deepwell Turbine Pump

3.1 Principles of operation

The pumped fluid enters the axial suction port at the bottom of a deepwell pump and passes directly into the eye of an impeller. The fluid is accelerated as it passes between the impeller blades. The acceleration is termed an "impulse" and is due to the difference in peripheral speeds between the outer and inner ends of the impeller blades. In general, for constant shaft speeds, the acceleration is proportional to the square of the impeller diameter.

After leaving the impeller, the fluid enters a diffuser which consists of a set of channels leading to the eye of the impeller of the second stage. Since the fluid enters the pump at the same rate at which it leaves, the increase in velocity head gained by successive impulses is converted to pressure head in the diffuser. The head developed by a multistage pump is approximately equal to the head developed in one stage times the number of stages.

3.2 Effect of process variables on pump characteristics

The head-capacity characteristics of a pump are not affected by differences in density of the fluid being pumped, but the discharge pressure and the brake horsepower at any flow rate are directly proportional to the density of the fluid. Viscosities up to 25 centipoises do not significantly affect the head developed at any flow rate as compared to the head developed when pumping water.

4. Process Requirements

Eighteen Canyon pumps, remotely installed and maintained, are required in the Purex process for the handling of "hot" process streams. Nine deepwell turbine pumps, designed for contact maintenance, are classed as Canyon pumps because of their location. The salient features of each of the Canyon pumps are listed in Table XIV-1. The pumps are divided into four groups on the basis of the required shaft lengths and the number and sizes of the stages required to meet head and capacity requirements. Operating spares are needed to insure continuity of operation in the event of pump failure.

5. Description of Units

An assembly drawing of a typical Canyon pump is shown in Figure XIV-1. Component parts of the assembly are described below. The pumps were built by the Johnston Pump Company, of Los Angeles, California. Each pump is supported on the vessel nozzle flange by means of a mounting flange. A vertical torque tube extends downward from the flange and contains the pump stages as integral parts of the column assembly. The torque tube length is determined by the depth of the vessel, and the number of stages is established by the required head-capacity characteristics of the pump. Solution enters through the suction port at the lower end of the pump and passes vertically upward through each succeeding stage and then the torque tube. It is

discharged through a side arm, radially, at the top of the torque-tube section below the mounting flange. The side arm bends to pass vertically through the mounting flange and emerges adjacent to the pump flange. This construction was employed to reduce the over-all height of the connector assembly for the discharge line connection. A set length of only 3 ft. made it desirable to locate the side arm above the mounting flange in the case of the 2AF pump. The drive shaft of the pump extends concentrically through the mounting flange and torque tube and is guided by sleeve bearings lubricated by process solution. An impeller is fixed to the shaft at each stage. The pump shaft is rigidly coupled to the shaft of a vertical, hollow-shaft electric motor mounted above the pump mounting flange. Weight of the shaft assembly and axial thrust are carried by the motor bearings. A throttle bushing is provided at the point where the shaft emerges from the torque-tube section. The close clearances between the shaft and the bushing restrict the flow of solution. Leakage past the throttle bushing is returned to the process vessel by gravity flow.

5.1 Pumps

The semi-shrouded pump impellers are cast Type 304 stainless steel. Tapered, split lock collets of Type 304 stainless steel are used to attach the impellers to the shaft.

The diffuser bowls which separate the impellers of two adjacent stages are of cast Type 304 stainless steel. These diffusers act as channels to guide the discharge from the periphery of one impeller into the suction eye of the next stage. Each bowl is provided with a tongue-and-groove registered fit to insure proper alignment of adjacent bowls. All bowls of any one group of pumps are similar and interchangeable. Sleeve bearings in each bowl, above and below the impeller, guide the shaft and serve to restrict intrastage recirculation of the pumped fluid. Table XIV-1 lists the number and sizes of stages in each pump. Figure XIV-2 presents typical head-capacity curves for pumps of each size.

5.2 Torque tube and shaft

5.21 Torque tube

The function of the torque tube is to support the pump stages, to protect the shaft, to retain bearings not contained in the bowls, and to carry the discharge stream through the pump to the discharge nozzle. A Schedule 40, 3-inch or 4-inch diameter I.P.S. flanged pipe torque tube, fabricated from Type 347 stainless steel, fixes the position of the stages from the mounting-flange head assembly and suspends the stage assembly. The length of the torque-tube section depends on the depth of the vessel.

5.22 Shaft

The vertical pump shaft runs concentrically within the torque tube. All shafts are nominally 1 inch in diameter with lengths varying from 3 ft. to 13 ft. 11-3/4 inches.

Alignment of the shaft is essential to operation of any pump and becomes of critical importance in the case of long-shafted pumps employing a number of bearings. Extreme caution must be exercised during remote handling to insure that the torque tube and shaft are not bent or misaligned.

5.3 Bearings

Process-solution-lubricated sleeve bearings are used to guide the shaft. One sleeve bearing is mounted in the diffuser section of each bowl or stage. A large bearing, called a "foot" or suction bearing, is mounted in the suction bell at the lower end of the shaft. Additional bearings mounted in "spiders" (bearing retainers which allow pumped solution to pass freely around them) are positioned at intervals along the shaft so that the greatest length of unsupported shaft is five feet. The arrangement provides a bearing above and below each impeller. In addition to adequately guiding the shaft these bearings restrict intrastage circulation of the pumped fluid. The sleeve bearings are fabricated from CSGBF (Cleves coke, standard coal-tar pitch, gas-baked finish) pile graphite, manufactured by the National Carbon Co. from coke produced by the Cleves Refinery of the Gulf Oil Co. The bearings are provided with diametral shaft clearances of 1.5 to 2.5 mils. Successful operation of the bearings demands constant lubrication. The pumps must never be operated without a flooded suction. Dry operation will result in almost immediate scoring and wear of the bearing and shaft surfaces.

Standard, ball, motor bearings are used to absorb developed axial thrust and to support the weight of the shaft and attached impellers as well as to guide the upper portion of the shaft. The motor bearings are ball bearings mounted in grease chambers in the motor. The chambers are packed with Shell Oil Company "Alvania No. 2" grease at the time of manufacture and require no further lubrication.

5.4 Shaft seal

A shaft seal, consisting of two throttle bushings, is provided at the mounting flange where the shaft emerges from the torque tube. The seal serves to prevent leakage of process fluids and vapors into the cell and thus prevents the spread of contamination. The throttle bushings are located at the top and bottom of a concentrically placed sleeve surrounding the shaft. The sleeve is an integral part of the discharge head casing. The lower or liquid throttle bushing is a plain sleeve bearing, fabricated from CSGBF pile graphite, that serves as a guide bushing in addition to restricting leakage. The upper or vapor throttle bushing is made from Graphitar No. 2 and is of labyrinth design (alternate grooves and lands). The discharge case has two diametrically opposite vents or ports extending through the column, located above the liquid throttle bushing. Solution which leaks past the bushing into the shaft sleeve drains through these ports back into the vessel. A slinger ring secured to the shaft near the top of the ports deflects solution rising along the shaft. The ports are located at least two inches above maximum liquid level in the tank.

The upper throttle bushing serves as a labyrinth trap to contain mists and vapors within the vessel.

5.5 Coupling and motor

5.51 Coupling

An adjustable, cast-iron, rigid, flange-type coupling is used to connect the pump and motor shafts. The hollow motor shaft is fabricated to form one of the flanges of the coupling. The second flange is secured to the motor-shaft flange by means of extended pins or bolts and to the pump shaft by means of a gib-head key that prevents rotation of the coupling with respect to the shaft while permitting axial freedom. An adjusting nut, threaded to the upper end of the shaft, provides for axial adjustment of the shaft and secured impellers as a unit during assembly. The nut is secured to the shaft coupling by means of a machine screw inserted axially through the nut into one of four equally spaced holes in the coupling, permitting quarter-turn adjustment of the nut. The coupling is coated with Amercoat No. 33.

5.52 Motor

The vertical, hollow-shaft, flange-mounted motors are 1750-rev./min., 3-phase, 440-volt squirrel-cage-type induction motors and are totally enclosed and fan cooled. Sizes range from 3 to 10 horsepower. External surfaces are protected with Amercoat No. 33.

The hollow motor shaft is machined to provide alignment fit with the pump shaft at the upper end of the motor shaft and is relieved through the balance of the bore for ease of assembly.

5.6 Mounting

Each Canyon pump is mounted on a circular adapter flange. The flange provides support for the pump, discharge-pipe connector nozzle, and a male electrical connector.

The flange is located on the tank by means of dowel pins and is fastened with free nuts. A bail is provided for lifting the assembly.

Triangular guide fins of stainless steel are welded to the torque tube above and below the torque-tube flanges to guide the pump through the tank opening and to reduce the possibility of the pump catching on the tank during installation or removal.

B. NON-CANYON SERVICE PUMPS

1. Introduction

Twenty-eight pumps are used for non-radioactive solution transfer in the Purex Plant. These pumps are located in the 202-A, 203-A, 211-A, and 276-A facilities.

2. Basis of Selection

Each pump was selected to meet the following requirements:

(a) Performance characteristics: A pump with the proper head-suction-capacity characteristics was selected for each application.

(b) Corrosion resistance: The materials of construction were specified to resist corrosion by the solution to be pumped.

Standard single-stage centrifugal pumps operating at 1800 rev./min. were selected for non-Canyon service.

3. Standard Horizontal Centrifugal Pumps

3.1 Requirements

Standard chemical transfer pumps range in capacity from 12 to 350 gal./min. and operating heads from 53 to 85 ft. of pumped fluid. Table XIV-2 lists the specific operating requirements for each pump.

3.2 Description

Ten pumps are of the open-impeller, single-stage, horizontal, vertically split design and operate at 1800 rev./min. The pumps are manufactured by the Pacific Pumping Company, Oakland, California. Single rotary mechanical seals prevent leakage of pumped solution.

Two pumps of similar design were manufactured by the General Machinery Company, Seneca Falls, New York. Ten were manufactured by the Byron-Jackson Company, Vernon, California. Of these ten, four are provided with double rotary mechanical shaft seals. One-gallon-capacity water tanks are provided with the pumps to supply seal lubrication water.

3.3 Performance and operation

Actual heads developed at shutoff (zero flow) and at process flow rates are listed in Table XIV-2. Typical head-capacity characteristic curves can be constructed through these two points if it should be necessary to estimate the pump capacity at any other operating head.

4. Self-Priming Centrifugal Pumps

4.1 Requirements

Six self-priming centrifugal pumps were selected for the unloading of chemical solutions from drums and tank cars in Building 211-A. The pumps range in capacity from 12 to 97 gal./min. and in discharge heads from 57 to 82 ft. Suction lifts vary from 3 to 8-1/4 ft.

4.2 Description

The pumps were manufactured by the Duriron Company, Dayton, Ohio, and are standard horizontal, self-priming centrifugal pumps with vertically split cases. The shafts of the acid and organic unloading pumps are sealed against leakage by single rotary mechanical seals. A double rotary mechanical seal lubricated by clear water is employed to seal the 50% sodium hydroxide unloading pump.

Self-priming pumps must be primed before they can be operated for the first time.

C. JETS

1. Introduction

Steam, air, and water are used for operating the jets in the Purex Plant. Steam jets are employed for gas transfer, sump draining, solution transfer, heel removal from process vessels, and as stand-by equipment for pumps. Air-operated jets are used for continuous sampling in the 202-A Building. A water eductor is employed for evacuation of the vacuum tank in the P.R. enclosure. Variable, controlled-flow steam jets are used as booster jets from extraction columns to the uranium concentrators.

2. Liquid-Transfer Jets

2.1 Requirements

Liquid-transfer jets are used to remove heels from process vessels, to drain sumps, and to serve as stand-bys for pumps. Table XIV-3 lists the characteristics required.

2.2 Description

Liquid-transfer jets are of standard design and are fabricated from Type 304L or Type 347 stainless steel. One hundred and forty-seven jets have 2-inch I.P.S. suction, discharge, and steam nozzles while 45 are provided with 1-in. I.P.S. connections. Six jets, used for draining of sumps, are provided with 3-in. suction and discharge connections and 2-in.-diameter steam nozzles. A sectional view of a typical jet is shown in Figure XIV-3.

2.3 Performance

Steam jets are classified into five groups according to their rated capacities when supplied with 90 lb./sq.in.ga. steam pressure. The capacities range from 2 to 75 gal./min. against heads of from 40 to 50 ft. Specific gravities of the solutions handled range from 1.0 to 2.5 and static suction lifts range from 18 to 22 ft. Individual jet performance data are included in Table XIV-3.

The water jet eductor delivers 3 gal./min. against a 60-ft. discharge head of a 1.23 specific gravity solution and a suction lift of 20 ft. when supplied with water at 100 lb./sq.in.ga. pressure. This jet is used to transfer off-standard plutonium solutions to the head end of the system for rework. The operating water for the jet serves to dilute the high-concentration plutonium at the same time.

3. Sampler Jets

3.1 Requirements

Sixty-six sampler jets are designed for continuous small-flow delivery when supplied with 90 lb./sq.in.ga. air pressure. Table XIV-3 lists the characteristics of individual jets.

3.2 Description

Sample jets are provided with 1/2-in. I.P.S. suction, discharge, and air supply connections. All jets are fabricated from Type 347 stainless steel. Standard jets are employed in this service.

3.3 Performance

Sampler jets have a capacity range from 0.026 to 0.056 gal./min. against essentially zero discharge head. The specific gravity range of the solutions is from 0.8 to 1.8.

4. Gas-Transfer Jets

4.1 Requirements

Eight steam jets are employed for gas transfer or exhauster service and are connected to the vessel vent system and the off-gas stack. Capacities are listed in Table XIV-3.

4.2 Description

Gas-transfer jets are manufactured by the Worthington Company and are basically of standard design. All jets are fabricated from Type 347 stainless steel and are designed for continuous operation.

4.3 Operation

Gas-transfer jets range in capacity from 250 to 1600 cu.ft./min. against from 0.5 to 4.0 lb./sq.in.ga. back pressure. The suction pressures, in inches of mercury, absolute, range from 25 to 28.

5. Variable-Flow Jets

5.1 Requirements

Six special variable-flow jets are used for the transfer of the HCP, ICU, and 2EU streams from the columns to the steam stripping sections of the concentrators. Variations in the flow rates are controlled by the position of the interface in the columns.

5.2 Description

The jet is a special stainless-steel ejector manufactured by the Penberthy Injector Company. The discharge capacity of each jet is variable over a 4-to-1 range by regulation of the suction-line throttling valve and alternatively variable over a 3-to-1 range by adjustment of the steam. The capacity range is from 10 to 40 gal./min. This rangeability is accomplished by a specially designed precision-machined nozzle and throat section. The jet is capable of operating at a constant discharge head of 25 ft. with a variable suction of from minus 3 to plus 21 ft. The jet is designed to operate with the steam-supply valve open at all times. If the suction valve is closed temporarily for periods up to three minutes and is then opened, the jet will start operation immediately.

Figure XIV-4 is a drawing of the jet.

5.3 Operation

During normal operation, regulation of the suction throttling valve is accomplished by the interface controller of the column. Manual setting of the steam-supply valve permits adjustment of the jet for major changes in the steam flow.

6. Gang Valves

6.1 Introduction

Gang valves are used to operate the steam jets in the Purex Plant. One hundred and fifty jets are controlled by means of two-position controllers and one jet, J-F-1, the vessel-vent exhauster, is controlled by a three-position controller.

6.2 Description and operation

Gang valves consist of four air-operated diaphragm valves (steam, air, shut-off, vent) operated remotely through a manually operated control located in the Operating Gallery. The use of automatic-sequence-operated valves prevents back flow of radioactive solutions into the partial vacuum created by condensation of steam in un-purged lines.

6.21 Two-position controller

The air controller has a two-position "On-Off" handle. When the handle is in the "On" position, steam is admitted to the jet. When the handle is turned to the "Off" position, the controller automatically adjusts the diaphragm valves first to an intermediate position and then, after a short period (10 seconds to 1-1/2 minutes), to the "Off" position. The positions assumed by the four air-operated diaphragm valves corresponding to the manually set position of the remote air controller are shown below.

Manual Control Switch Position	Valve No. 1: Steam	Valve No. 2: Air	Valve No. 3: Shutoff	Valve No. 4: Vent
On	Open	Closed	Open	Closed
Off (immediate action)	Closed	Open	Open	Closed
Off (10 to 90-second delay)	Closed,	Closed	Closed	Open

Figure XIV-5 shows the operation of the system schematically.

In the "Off" position the steam, air, and shutoff valves are closed and the valve header is vented to the Jet Vent Header. When the operating handle is turned to "On" the shutoff valve and steam valve are opened, the vent valve is closed and the jet operates. Immediately after the handle is turned to "Off" the steam valve is closed and the air valve is opened to purge the line of steam and prevent condensation and reverse flow of process solution into the steam line. The position is held automatically for a period that may be adjusted from 10 to 90 seconds before all valves return to the normal "Off" position.

6.22 Three-position controller

Jet J-F-1, discharging from the vessel vent system into the vent condenser, is regulated by means of a three-position controller providing the valve action described below. When the switch handle is moved manually the following events occur automatically:

Manual Control Switch Position	Valve No. 1: Steam	Valve No. 2: Air	Valve No. 3: Shutoff	Valve No. 4: Vent
Steam	Open	Closed	Open	Closed
Off (immediate action)	Closed	Open	Open	Closed
Off (10 to 90-second delay)	Closed	Closed	Closed	Open
Air (after switching from "Off" or "Steam")	Closed	Open	Open	Closed
Off (immediately after switching from "Air")	Closed	Closed	Closed	Open

Figure XIV-5 shows the operation of the system schematically.

D. AGITATORS

1. Design Basis

Agitators are used in the Purex Plant to mix and blend tank contents, to promote chemical reactions, and to improve heat-transfer coefficients. These agitators are designed to provide three degrees of agitation: mild, medium, and violent. "Mild" mixing is described as a degree of agitation which causes no disturbance of the liquid surface other than a swirling effect. "Medium" agitation is that which causes waves but no breaks in the liquid surface. "Violent" mixing produces waves, seething, and splashing.

Table XIV-4 lists the agitators and process requirements.

2. Description

2.1 Canyon agitators

Figure XIV-6 is a representative drawing of a typical Canyon agitator.

The thirty agitators for the Purex Plant Canyon were manufactured by Eastern Industries, Inc. The agitators are classified into three groups on the basis of shaft length as indicated in Table XIV-4. All agitators are driven by 15-horsepower electric motors except the two one-horsepower-driven 2AF agitators. The rotational speed of all Canyon agitators is 600 r.p.m.

The upper end of the agitator shaft passes through the hollow shaft of a vertical 440-volt, 60-cycle, 3-phase electric motor. The bore of the motor shaft is precision fitted to the agitator shaft at the top and bottom ends of the motor to provide a registered fit. This arrangement insures concentricity and alignment during assembly.

The motor bearings guide the rotating shaft, support the weight of the agitator and absorb axial thrust developed during operation.

A single labyrinth seal or throttle bushing fabricated from Graphitar No. 2 serves to restrict the leakage of process vapors and mists from the tank at the point of emergence of the agitator shaft.

2.2 Non-Canyon agitators

Twenty-nine standard agitators are used in "cold" service in the Purex Plant. Six of these were manufactured by the Patterson Foundry and Machine Company, while the remaining twenty-three were manufactured by the Mixing Equipment Company. Figure XIV-7 is a drawing of a typical agitator. Specifications for all agitators are listed in Table XIV-4.

REFERENCES

(1) BPF 7515 Non-Canyon Agitators

(2) BPF 7920 Transfer Jets

(3) BPF 7924 Sampler Jets

(4) BPF 7931 Non-Canyon Pumps - Pacific Pumping Co.

(5) BPF 7932 Canyon Pumps

(6) BPF 8097 Canyon Agitators

(7) BPF 8190 Gas-Transfer Jets

(8) BPF 8368 Non-Canyon Pumps - Byron and Jackson

(9) BPF 8388 Non-Canyon Pumps - Duriron Co.

(10) BPF 8517 Non-Canyon Pumps - Wagner Electric Co.

LIST OF TABLES AND FIGURES

TABLE XIV-1 CANYON SERVICE PUMPS

TABLE XIV-2 NON-CANYON SERVICE PUMPS

TABLE XIV-3 PUREX JETS

TABLE XIV-4 PUREX AGITATORS

FIGURE XIV-1 TYPICAL CANYON PUMP

FIGURE XIV-2 CANYON PUMP CHARACTERISTICS

FIGURE XIV-3 TYPICAL JET

FIGURE XIV-4 VARIABLE-FLOW JET

FIGURE XIV-5 SCHEMATIC DRAWINGS OF GANG-VALVE CONTROLLER SYSTEMS

FIGURE XIV-6 TYPICAL CANYON AGITATOR

FIGURE XIV-7 TYPICAL NON-CANYON AGITATOR

TABLE XIV-1

CANYON SERVICE PUMPS

Pump	Solution	Specific Gravity	Group	Discharge Head, Ft.	Flow Rate, Gal./Min.	Horse-power	No. of Stages	Pump Size	Column Diameter, In.	Set Length	Location	Use	Stream Destination
P-F-7	HNO_3	1.52	1	30	17	3	4	6BS	3	9'-2 3/4"	Acid Recycle	Recycle	#1 Acid Concentrator
P-F-13	---		1	46	32	3	4	6BS	3	9'-2 3/4"	Utility Tank	---	Utility Decanter
P-G-2	IOW	1.04	1	55	25	3	4	6BS	3	9'-2 3/4"	IOW Tank	Feed	IO Column
P-H-1	HAF	1.50	1	50	10	3	4	6BS	3	9'-2 3/4"	HAF Feed Tank	Feed	HA Column
P-J-1	IAF	1.50	1	51	10	3	4	6BS	3	9'-2 3/4"	IAF Feed Tank	Feed	IA Column
P-K-1	2DF	1.50	1	51	10	3	4	6BS	3	9'-2 3/4"	2DF Feed Tank	Feed	2D Column
P-G5-1	Organic	0.84 to 1.05	2	93	70	5	7	6DS	3	13'-11 3/4"		Solvent Feed	Solvent Header
P-G5-2	Organic	0.84 to 1.05	2	93	70	5	7	6DS	3	13'-11 3/4"		Solvent Feed	Solvent Header
P-G5-3	Organic	0.84 to 1.05	2	93	70	5	7	6DS	3	13'-11 3/4"		Transfer	ITO Decanter
P-G7-1	Organic	0.84 to 1.05	2	93	70	5	7	6DS	3	13'-11 3/4"		Feed	Solvent Header
P-G7-2	Organic	0.84 to 1.05	2	93	70	5	7	6DS	3	13'-11 3/4"		Feed	Solvent Header
P-G7-3	Organic	0.84 to 1.05	2	93	70	5	7	6DS	3	13'-11 3/4"		Transfer	ITO Decanter
P-F-10	HNO_3	1.6	3	51	50	10	6	7BS	4	9'-2 3/4"	Acid Accumulator	Transfer	#2 Acid Concentrator
P-G1-1	IOF	0.84	3	21	200	10	6	7BS	4	9'-2 3/4"	IOF Tank	Circulation	IOF Tank
P-G1-2	IOF	0.84	3	69	70	10	6	7BS	4	9'-2 3/4"	IOF Tank	Feed	IO Column
P-J-3	IBXF	0.96	3	72	40	10	6	7BS	4	9'-2 3/4"	IB Pump Tank	Feed	IBX Column
P-K-6	U Prod.	1.63	3	108	100	10	6	7BS	4	9'-2 3/4"	2EU Sample Tank	Transfer	UNH Outside Storage
P-J-5	2AF	1.20	4	60	6	3	4	6BS	4	3'-0"	2AF Tank	Feed	2A Column
P-R1-1*	2OF	1.6		27	200	10	6	7BS	4	9'-2 3/4"	2OF Tank	Circulation	2OF Tank
P-R1-2*	2OF	0.84		35	30	3	4	6BS	3	9'-2 3/4"	2OF Tank	Feed	2O Column
P-R2 *	2OW	1.03		41	25	3	4	6BS	3	6'-7 3/4"	2OW Tank	Feed	2O Column
P-U1-1*	HNO_3	1.37		110	60	10	6	7BS	4	13'-11 3/4"	Recovered Acid Storage "A"	Feed	Recovered Acid Header
P-U1-2*	HNO_3	1.37		110	60	10	6	7BS	4	13'-11 3/4"	Recovered Acid Storage "A"	Feed	Recovered Acid Header
P-U2-1*	HNO_3	1.37		110	60	10	6	7BS	4	13'-11 3/4"	Recovered Acid Storage "B"	Feed	Recovered Acid Header
P-U2-2*	HNO_3	1.37		110	60	10	6	7BS	4	13'-11 3/4"	Recovered Acid Storage "B"	Feed	Recovered Acid Header
P-L9	Pu Product	1.17									Product Sampler "A"	Circulation	L-9
P-L10	Pu Product	1.17									Product Sampler "B"	Circulation	L-10

*Denotes pumps where contact maintenance is permissible. Classed as Canyon pumps only because of location. Others are remotely maintained.

NOTES:

(1) All shafts are Type 304 stainless steel, 1 inch in diameter.

(2) All columns are Type 347 stainless-steel Schedule 40 pipe.

(3) Group 3 pumps have 3"-diameter I.P.S. discharge lines - all others are 2" diameter I.P.S.

TABLE XIV-2

NON-CANYON SERVICE PUMPS

Building Number	Pump Number	Solution	Origin	Destination	Pump Manufacturer	Process Requirements(a) Discharge Head, Ft.	Process Requirements(a) Capacity, Gal./Min.	Solution(b) Specific Gravity	Solution(b) Viscosity, Centipoises	Service	Motor Horse-power	Pipe Size, In. Suction	Pipe Size, In. Discharge	Type Seal
202-A	P-101	$Fe(NH_2SO_3)_3$	$Fe(NH_2SO_3)_3$ Adj. Tk.	$Fe(NH_2SO_3)_3$ Add. Tk.	Pacific Pumping	85	17	1.53	2	Continuous	3	2	1-1/2	Single
202-A	P-103	$Fe(NH_2SO_3)_3$	$Fe(NH_2SO_3)_3$ Make-Up Tk.	$Fe(NH_2SO_3)_3$ Adj. Tk.	Pacific Pumping	85	17	1.53	2	Continuous	3	2	1-1/2	Single
202-A	P-104	$NaNO_3$	$NaNO_3$ Make-Up Tk.	$NaNO_3$ Add. Tk.	Byron Jackson	58	100	1.19	1.2	Intermittent	5	2	1-1/2	Single
202-A	P-105	Wash	Wash Make-Up Tk.	All Tks. feeding Canyon Tks.	Byron Jackson	72	120	1.02 to	1 to 30	Intermittent	10	2	1-1/2	Single
202-A	P-107	Na_2CO_3	Na_2CO_3 Make-Up Tk.	IOF, 20F or Na_2CO_3 Add. Tks.	Byron Jackson	72	120	1.5	1 to 30	Intermittent	10	2	1-1/2	Single
202-A	P-106	$NaNO_2$	$NaNO_2$ Storage Tk.	$NaNO_2$ Add. Tk.	Byron Jackson	71	50	1.07	1.0	Intermittent	5	1-1/2	1	Single
202-A	P-324-1	Solvent	Solvent Head Tk.	2A, 2D Columns or Tks. K2, L1, G5 and G7.	Pacific Pumping	64	32	0.84	2	Continuous	5	2	1-1/2	Single
202-A	P-324-2	Solvent	Solvent Head Tk.		Pacific Pumping	64	32	0.84	2	Continuous	5	2	1-1/2	Single
203-A	P-1	UNH	UNH Stor. Tks.	UNH Stor. or truck loading station	Byron Jackson	58	120	1.6	3 to 4	Intermittent	7-1/2	2	1-1/2	Double
203-A	P-3	UNH			Byron Jackson	58	120	1.6	3 to 4	Intermittent	7-1/2	2	1-1/2	Double
211-A	P-11-1(a)	60% HNO_3	60% HNO_3 Storage or tank car unloading station	202-A Building	Duriron	82	96	0.973	2 to 3.3	Intermittent	7-1/2	2-1/2	2	Single
211-A	P-11-2(a)	60% HNO_3		202-A Building	Duriron	82	96	to	2 to 3.3	Intermittent	7-1/2	2-1/2	2	Single
211-A	P-40-1(a)	Diluent	Diluent Stor. Tk.	202-A Building	Duriron	82	96	1.37	2 to 3.3	Intermittent	7-1/2	2-1/2	2	Single
211-A	P-12-1	60% HNO_3	60% HNO_3 Stor. or tank car unloading station	202-A Building	Pacific Pumping	53	12	0.973 to	2 to 5	Intermittent	3	2	1-1/2	Single
211-A	P-12-2	60% HNO_3		202-A Building	Pacific Pumping	53	12	1.83	2 to 5	Intermittent	3	2	1-1/2	Single
211-A	P-20(a)	50% NaOH	50% NaOH Stor. Tanks or unloading station	202-A Bldg. or Demin.	Duriron	58	60	1.53	90	Intermittent	3	2	1-1/2	Double
211-A	P-21-1	50% NaOH		202-A Bldg. or Demin.	Byron Jackson	56	30	1.53	90	Intermittent	3	1-1/2	1	Double
211-A	P-21-2	50% NaOH		202-A Bldg. or Demin.	Byron Jackson	56	30	1.53	90	Intermittent	3	1-1/2	1	Double
211-A	P-30-1	Demin. H_2O	Demin. H_2O Stor. Tk.	202-A Bldg.	Gould	80	350	1.0	1.0	Continuous	20	4	3	Single
211-A	P-30-2	Demin. H_2O	Demin. H_2O Stor. Tk.	202-A Bldg.	Gould	80	350	1.0	1.0	Continuous	20	4	3	Single
211-A	P-40-2	Diluent	Diluent Stor. Tk.	202-A Bldg.	Byron Jackson	66	80	0.973 to	2 to 3.3	Intermittent	5	2	1-1/2	Single
211-A	P-41-2	TBP	TBP Stor. Tk.	202-A Bldg.	Byron Jackson	66	80	1.37	2 to 3.3	Intermittent	5	2	1-1/2	Single
211-A	P-41-1	TBP	TBP Stor. Tk.	202-A Bldg.	Duriron	57	12	0.973 to	2 to 5	Intermittent	3	2	1-1/2	Single
211-A	P-50	H_2SO_4	H_2SO_4 Stor. or drum unloading station	Demin. or lab.	Duriron	57	12	1.83	2 to 5	Intermittent	3	2	1-1/2	Single
276-A	P-R5-1	Organic	2TO Tanks A and B	Solvent Head Tk.	Pacific Pumping	85	32	0.84 to	2	Continuous	5	2	1-1/2	Single
276-A	P-R5-2	Organic		Solvent Head Tk.	Pacific Pumping	85	32	1.1	2	Continuous	5	2	1-1/2	Single
276-A	P-R5-3	Organic		Decanter or organic cribs	Pacific Pumping	85	32	0.84 to	2	Continuous	5	2	1-1/2	Single
276-A	P-R5-4	Organic		Decanter or organic cribs	Pacific Pumping	85	32	1.1	2	Continuous	5	2	1-1/2	Single

NOTES

(a) Pumps P-11-1, 11-2, 40-1, and 20 are self-priming with suction head of 8'-8 1/4". All others have positive suction heads.

(b) Influent temperatures of solutions range from 77°F. to 100°F.

TABLE XIV-3

PUREX JETS

Jet Number	Function	Size, Inches	Capacity Cu.Ft./Min.	Capacity Gal./Min.	Suction Pressure, In. Hg. Absolute	Influent Temperature, °F.	Back Pressure, Lb./Sq.In.Ga.	Discharge Head, Ft.	Total Suction Lift, Ft. of H_2O	Solution Specific Gravity	Solution Viscosity, Centipoises	Service	Operating Fluid
A1-2	Exhausts off gas from dissolver gas treatment chain.	10 x 10 x 4	1600		25.5	340	4.0	—	—	—	—	Continuous	Steam
B1-2		10 x 10 x 4	1600		25.5	340	4.0					Continuous	
C1-2		10 x 10 x 4	1600		25.5	340	4.0					Continuous	
A1-1	Exhausts off gas from dissolver gas treatment chain.	6 x 6 x 2	460		27.5	350	1.5					Continuous	Steam or Air
B1-1		6 x 6 x 2	460		27.5	350	1.5	—	—	—	—	Continuous	
C1-1		6 x 6 x 2	460		27.5	350	1.5						
SPA	Liquid removal from sumps.	3 x 3 x 2		75	—	77		50	17.5	1.0 to 1.6	1 to 3	Intermittent	Steam
SPB				75		77		50	17.5	1.0 to 1.6	1 to 3	Intermittent	
SPC				75		77		50	17.5	1.0 to 1.6	1 to 3	Intermittent	
SPD				75		77		50	17.5	1.0 to 1.6	1 to 3	Intermittent	
SPE				75		77		50	17.5	1.0 to 1.6	1 to 3	Intermittent	
SPL	Sampler.	1/2 x 1/2 x 1/2		0.026 to 0.056	See Note (a)	104		—	60	0.8 to 1.8	1 to 5	Continuous	Air
F1-1	Exhausts vessel vent system.	8 x 8 x 2	800	—	28.0	212	1.5	—	—			Continuous	Steam or Air
F1-2	Exhausts condenser vent system.	4 x 4 x 2	250	—	25.0	212	1.5		—			Continuous	Steam or Air
L11-1	Exhausts vacuum tank in P.R. enclosure.	1 x 1 x 1	See Note (b)	—	—	77	0.5		—			Intermittent	Steam
L11-2	Batch transfer of Pu sol'n. for rework.	1 x 1 x 1	—	3	—	104		60	20	1.23	1.5	Intermittent	Water
See Note (c)	Batch transfer of process solutions.(i)	2 x 2 x 2		75	—	104		50	22	1.0 to 1.8	1 to 5	Intermittent	Steam
See Note (d)		2 x 2 x 2	—	25	—	104		50	22	1.0 to 2.5	1 to 5	Intermittent	Steam
See Note (e)		1 x 1 x 1	—	10	—	104		50	22	1.0 to 1.63	1 to 5	Intermittent	Steam
See Note (f)		1 x 1 x 1		2		104		40	21	1.68	3.3	Continuous	Steam
See Note (g)		1 x 1 x 1		3		104		40	18	2.5	5	Intermittent	Steam
K3-1(h)	Controlled-rate transfer of 2EU, HCP, and ICU from extraction columns to uranium concentrators.	2 x 2 x 2				104						Continuous	Steam
K3-2(h)		2 x 2 x 2				104						Continuous	Steam
H3-1(h)		2 x 2 x 2				104						Continuous	Steam
H3-2(h)		2 x 2 x 2				104						Continuous	Steam
J7-1(h)		2 x 2 x 2				104						Continuous	Steam
J7-2(h)		2 x 2 x 2				104						Continuous	Steam

NOTES:

(a) Suction lift obtained by bleed-in of atmospheric air into suction line to reduce apparent specific gravity of liquid being handled. Total suction lift without air bleed-in to be at least 22 ft. of water.

(b) Shall evacuate a 10 cu.ft. system to 22 inches of mercury vacuum in 5 minutes.

(c) Includes jets A3-1, A3-2, A3-3, B3-1, B3-2, B3-3, C3-1, C3-2, C3-3, D1-1, D1-2, D1-3, D2-1, D2-2, D3-1, D3-2, D4-1, D4-2, D5-1, D5-2, E1-1, E1-2, E1-3, E1-4, E5-1, E5-2, E5-3, E6-1, E6-2, F3-1, F3-2, F3-3, F4, F5, F6, F7-2, F8-1, F8-2, F8-3, F8-4, F10-2, F11, F12-1, F12-2, F13-1, F13-2, F13-3, F13-4, F15-1, F15-2, F16-1, F16-2, F16-3, F18-1, F18-2, F18-3, G1-2, G1-3, G2-1, G2-2, G8-2, G8-3, G8-4, H1, J1-2, K5-2, K6-1, K6-2, K6-3, K6-4, M1-1, M1-2, M1-3, M2, R1-2, R1-3, R1-4, R2-1, R2-2, R2-3, R8-2, R8-3, R8-4, U3, U4, SMC, also sump jets SA, SB, SC, SD, SE, SFA, SFb, SG, SJ, SK, SLA, 611 (sump B-1), J8, and H4.

(d) Includes jets E2, E4, F7-1, F10-1, F14, G1-1, G6, J3, K1-2, R1-1, R6, A2-2, B2-2, C2-2, F2-2, and sump jets SMA, SMB, SUA-1, SUA-2, SUA-3, SUB, SR1, and SR2.

(e) Includes jets G2-3, G3, G4, G8-1, H2-1, H2-2, J1-1, J2-1, J2-2, J4, J5, J6-1, J6-2, K1-1, K2-1, K2-2, K5-1, L1, L2, R2-4, R3, R4, R8-1, and sump SLC.

(f) Includes jets E3-1, E3-2, E3-3, and E3-4.

(g) Includes jets A2-1, B2-1, C2-1, F2-1, E6-3 (Recycle hood), and sump SLD.

(h) Capacity - minimum rangeability - 4 to 1 by suction line throttling or alternatively 3 to 1 by steam throttling - to be uniform, ± 5% at any rate between 10 and 40 gal./min. Jet is designed to operate with steam supply valve open at all times. If suction valve is closed temporarily for periods up to 3 minutes, and is then opened, jet must start operation immediately. Jet must be capable of operation at a constant discharge head of 25 ft. with a variable suction of from minus 3 ft. to plus 21 ft.

(i) Heel removal from process vessels, stand-bys for pumps, and sump draining.

TABLE XIV-4

PUREX AGITATORS

Agitator Number[a]	Agitator Type[c]	Vessel	Agitator Number[a]	Agitator Type[c]	Vessel
101	D	$Fe(NH_2SO_3)_3$ Make-Up	F15	C	Concentrate Sampler Tank
103	D	$Fe(NH_2SO_3)_3$ Make-Up	F16	C	Neutralizer Tank
104	F	$NaNO_3$ Make-Up	F18	C	Cell Drain Collection Tank
105	F	Wash Make-Up	G3A	E	Chem. Add. to Cent. Feed Tank
106	D	$NaNO_2$ Make-Up	G5-1	B	ITO Tank A
107	F	Na_2CO_3 Make-Up	G5-2	B	ITO Tank A
204	D	Waste Rework Addition	J5-1	A	2AF Tank
205	D	Utility Addition Tank	J3	C	IB Pump Tank
206	D	NaOH Addition	J5-2	A	2AF Tank
209	F	IBX Make-Up Tank B	J1	C	IAF Feed Tank
210	F	IBX Make-Up Tank A	G7-2	B	ITO Tank B
211	D	2AS Make-Up Tank A	G5A	F	ITO Wash Feed Tank
212	D	2AS Make-Up Tank B	G8	C	ITO Wash Collection Tank
213	D	2BX Make-Up Tank A	G7-1	B	ITO Tank B
214	D	2BX Make-Up Tank B	H1	C	HAF Feed Tank
D2	C	Coating Waste Tank	K1	C	2BF Feed Tank
D3	C	Metal Solution Tank A	K5	C	2BU Receiver
D4	C	Metal Solution Tank B	K6	C	2BU Sample Tank
D5	C	Metal Solution Tank C	M1A	D	Decontam. Cell Chem. Add. Tank
E1	C	Slurry Tank	R1A[b]	F	Solvent Blend Tank
E2A	E	Chem. Add. To Cent.	R3A[b]	E	Centrifuge Spray Tank
E3	C	Centrifuge Feed Tank	R5[b]	G	2TO Tank A
E5	C	Centrifuge Catch Tank	R5A[b]	F	2TO Wash Feed Tank
E6	C	HAF Make-Up Tank	R7[b]	G	2TO Tank B
F3	C	HNO_3 Sample Tank	R8	H	2TO Wash Collection
F4	C	HNO_3 Receiver Tank	U1	I	Recovered Acid Storage
F7	C	Acid Recycle Tank	U2	I	Recovered Acid Storage
F10	C	Acid Accumulator Tank	U3	G	Lab. Crib Waste Receiver A
F12	C	Concentrate Rec. Tank	U4	G	Lab. Crib Waste Receiver B
F13	C	Utility Tank			

NOTES:

(a) Location: Building 202-A, except where otherwise noted.

(b) Location: Building 276-A.

(c) Description of agitators by types:

Agitator Type	Motor		Shaft		Impellers			Degree of Agitation
	Horse-power	Speed, R.P.M.	Length	Dia., In.	No. of Impellers	No. of Blades/ Impeller	Dia., In.	
A	1	600	3'-0"	1-1/8	2	4	5-7/8	Violent
B	15	600	13'-3 1/2"	2-1/2	3	4	9	Medium
C	15	600	8'-6"	2	2	4	9	Medium
D	1	1150	6'-4"	1-1/4	1	3	6	Mild
E	1/2	1750	4'-6"	1	1	3	4	Mild
F	7-1/2	100	10'-0"	2-1/2	1	7	26	Mild to Medium
G	15	100	14'-0"	3-1/2	2	6	26	Mild
H	7-1/2	155	9'-3"	2-1/2	2	6	18	Medium
I	7-1/2	125	13'-6"	3-1/2	2	6	21	Medium

[redacted]

FIGURE XIV-1
TYPICAL CANYON PUMP

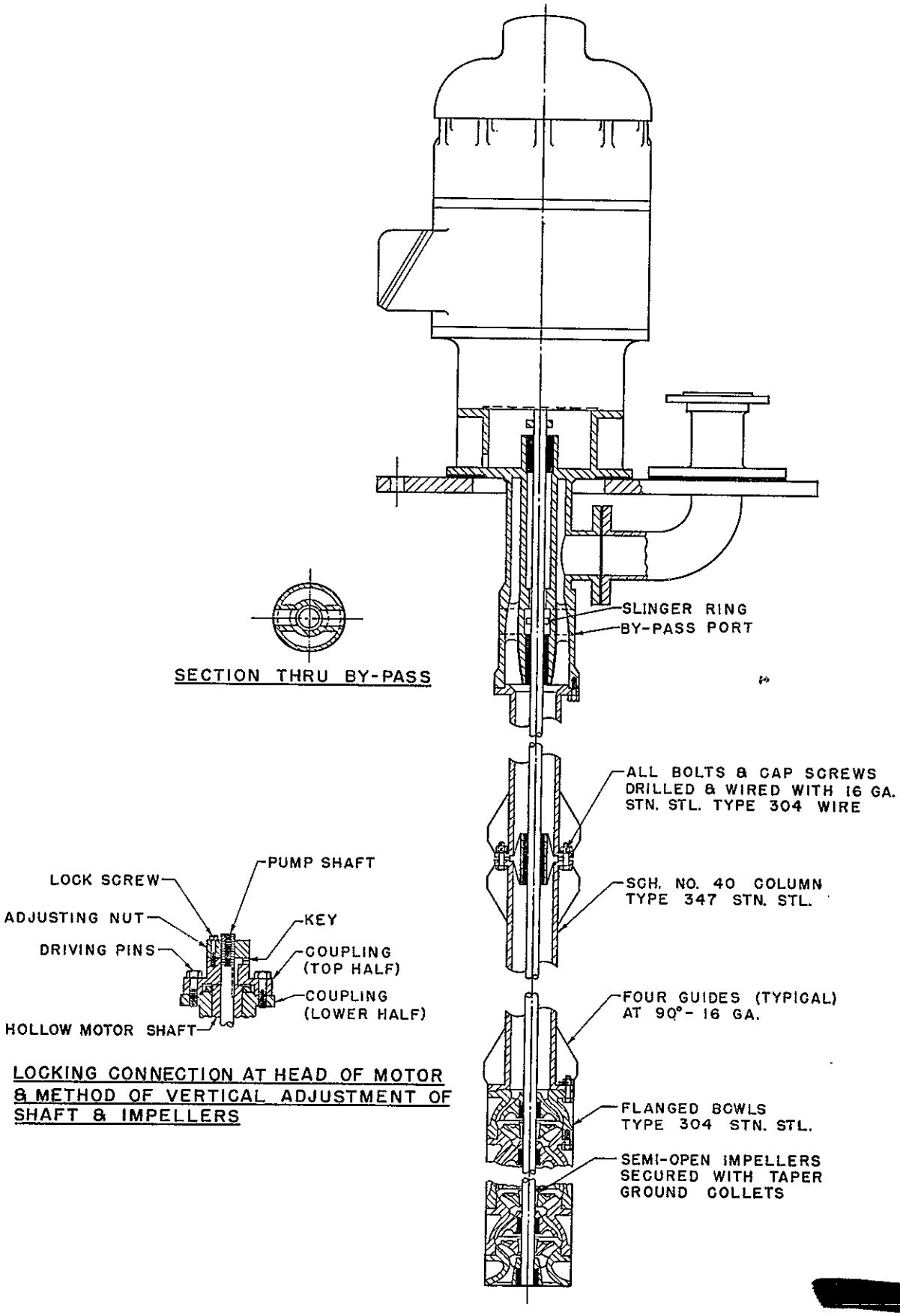

[redacted]

[redacted]

FIGURE XIV-2
CANYON PUMP CHARACTERISTICS

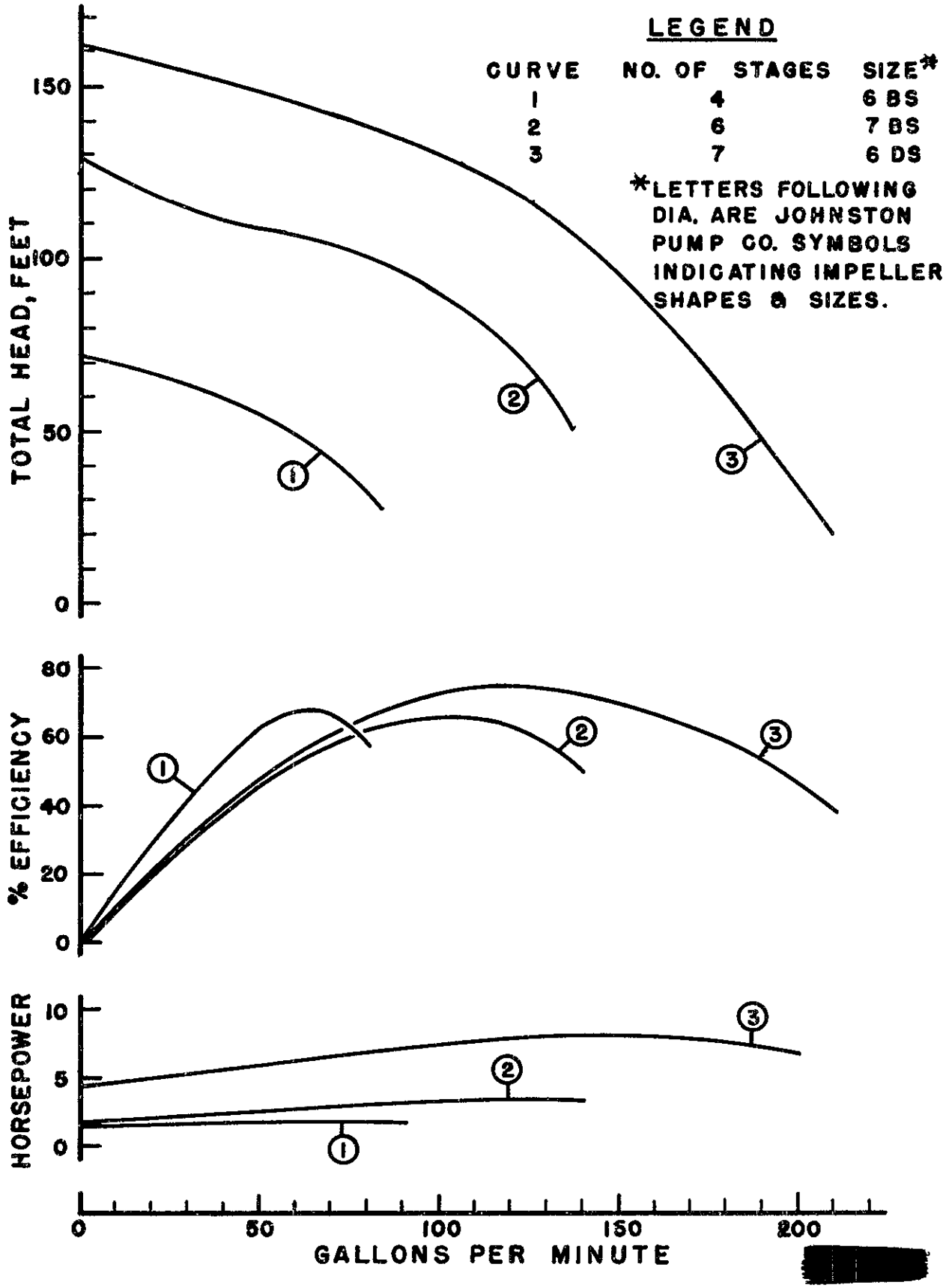

[redacted]

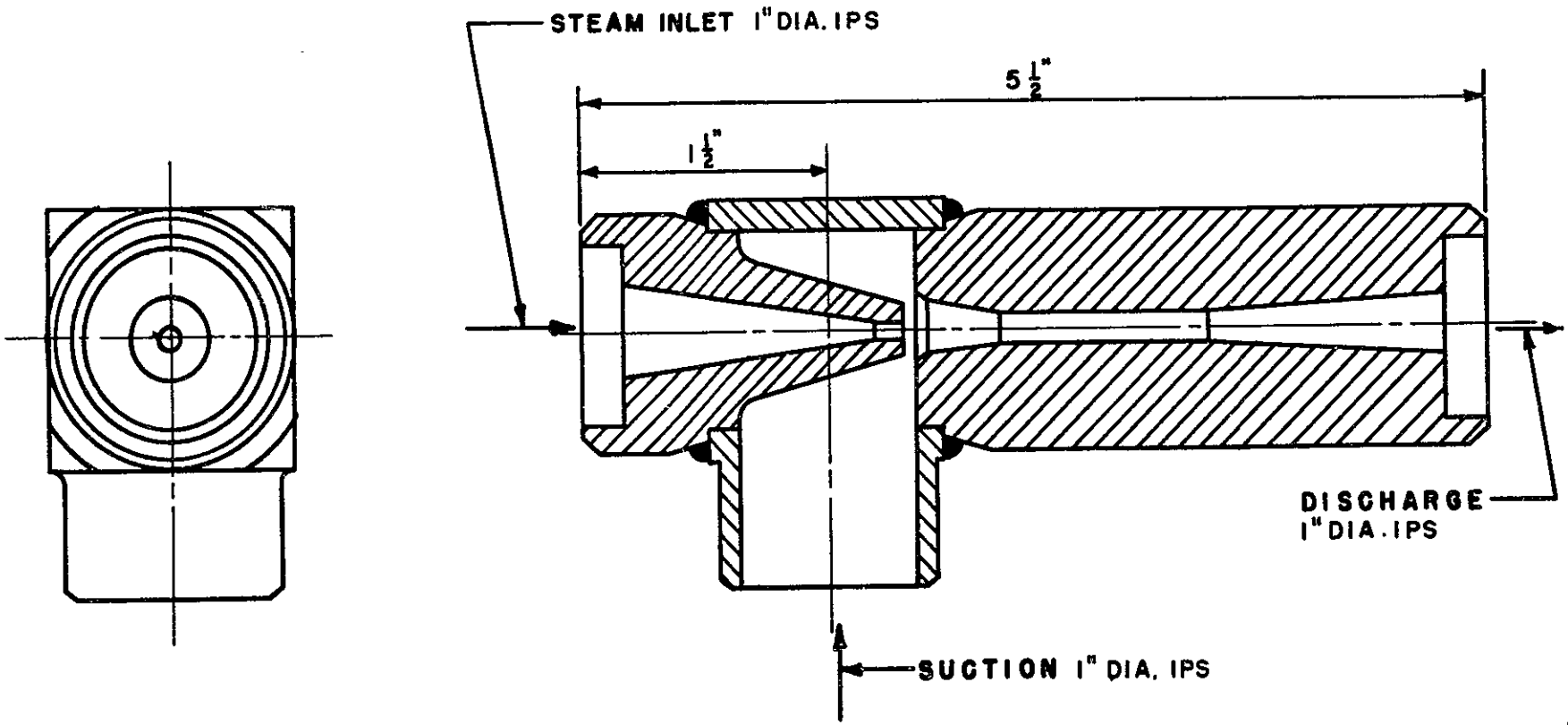

NOTE: DIMENSIONS VARY FOR DIFFERENT JETS. THE DIMENSIONS INDICATED ARE FOR A 2-GAL./MIN. JET.

FIGURE XIV-3

TYPICAL JET

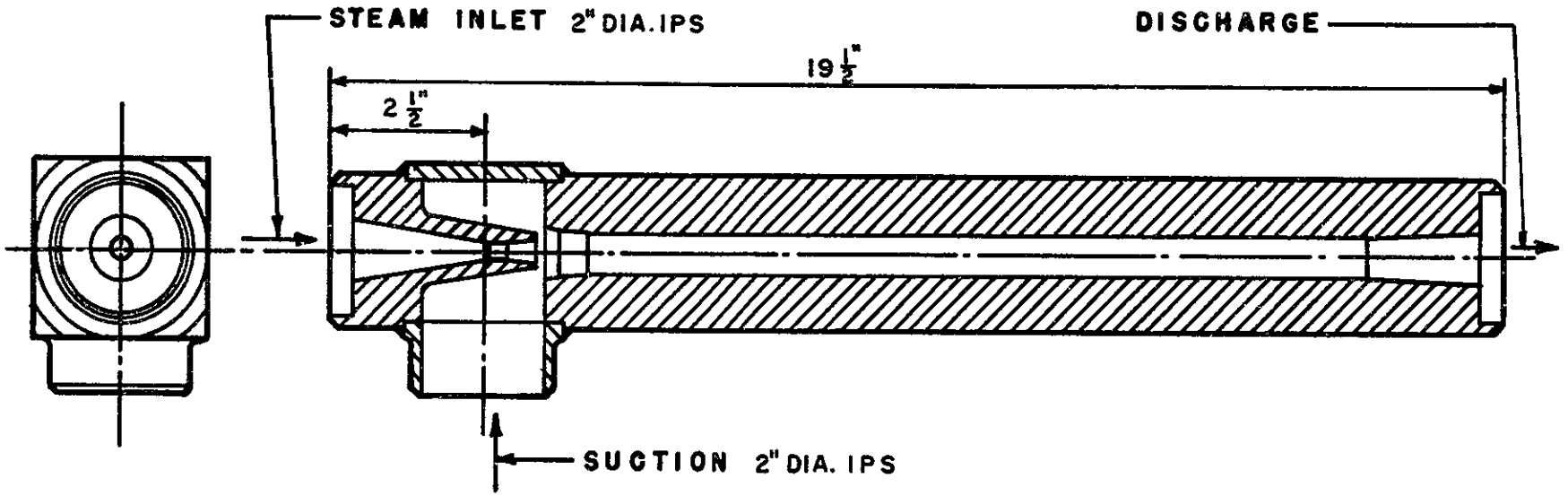

FIGURE XIV - 4

VARIABLE-FLOW JET

(JETS - K3-1, K3-2, H3-1, H3-2, J7-1, J7-2)

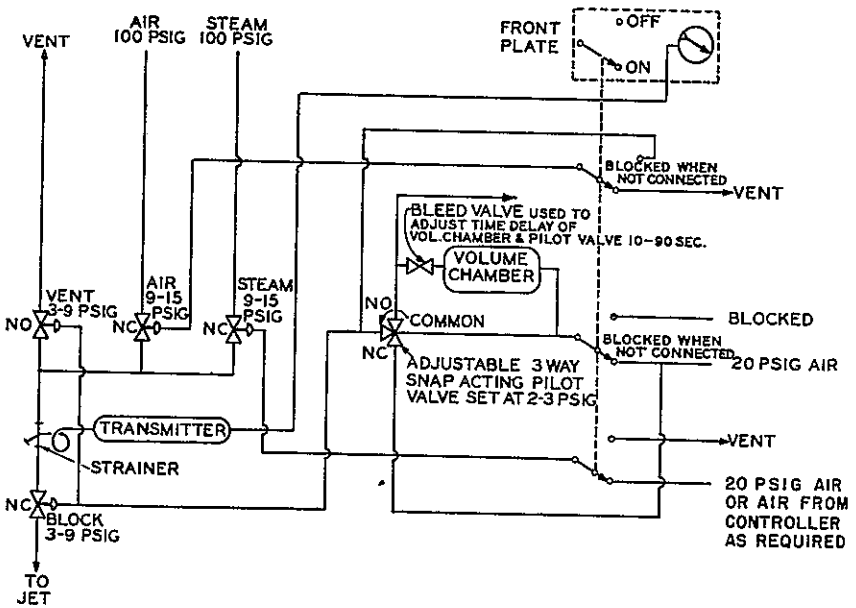

TWO-POSITION GANG-VALVE CONTROLLER

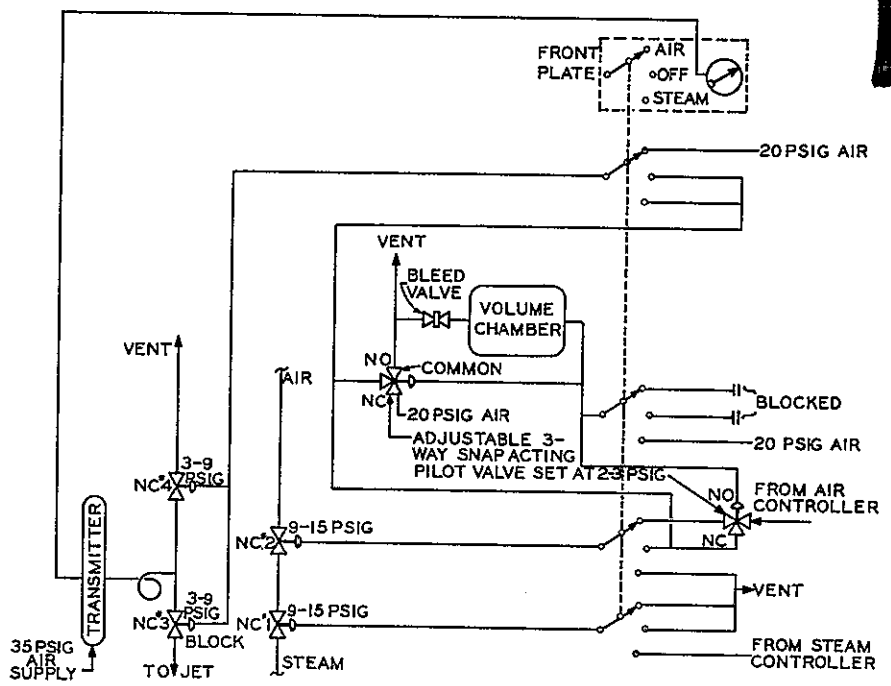

THREE-POSITION GANG-VALVE CONTROLLER

LEGEND: NC-NORMALLY CLOSED
NO-NORMALLY OPEN

FIGURE XIV-5

SCHEMATIC DRAWINGS OF GANG-VALVE CONTROLLER SYSTEMS

FIGURE XIV-6

TYPICAL CANYON AGITATOR

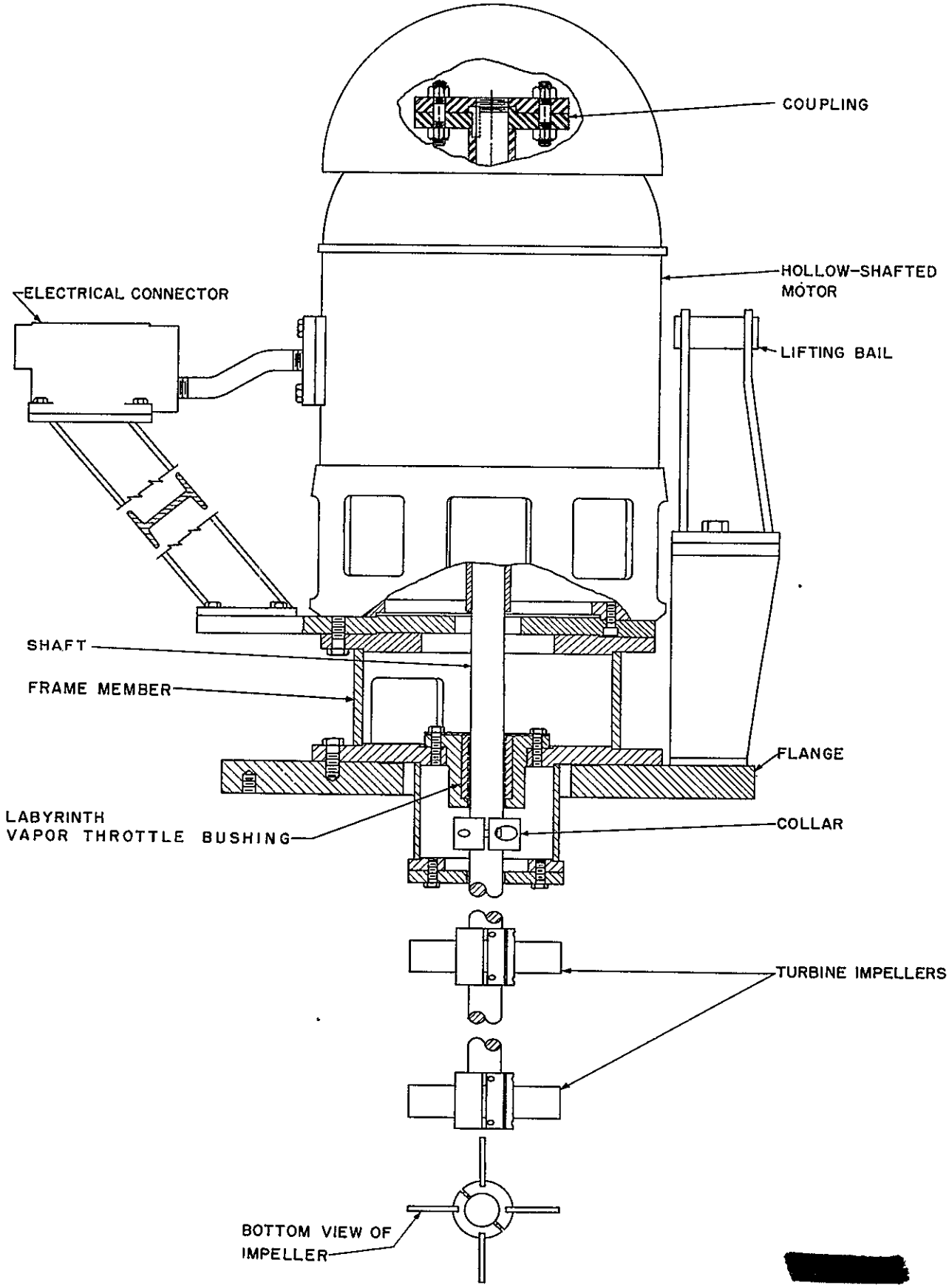

FIGURE XIV-7
TYPICAL NON CANYON AGITATOR

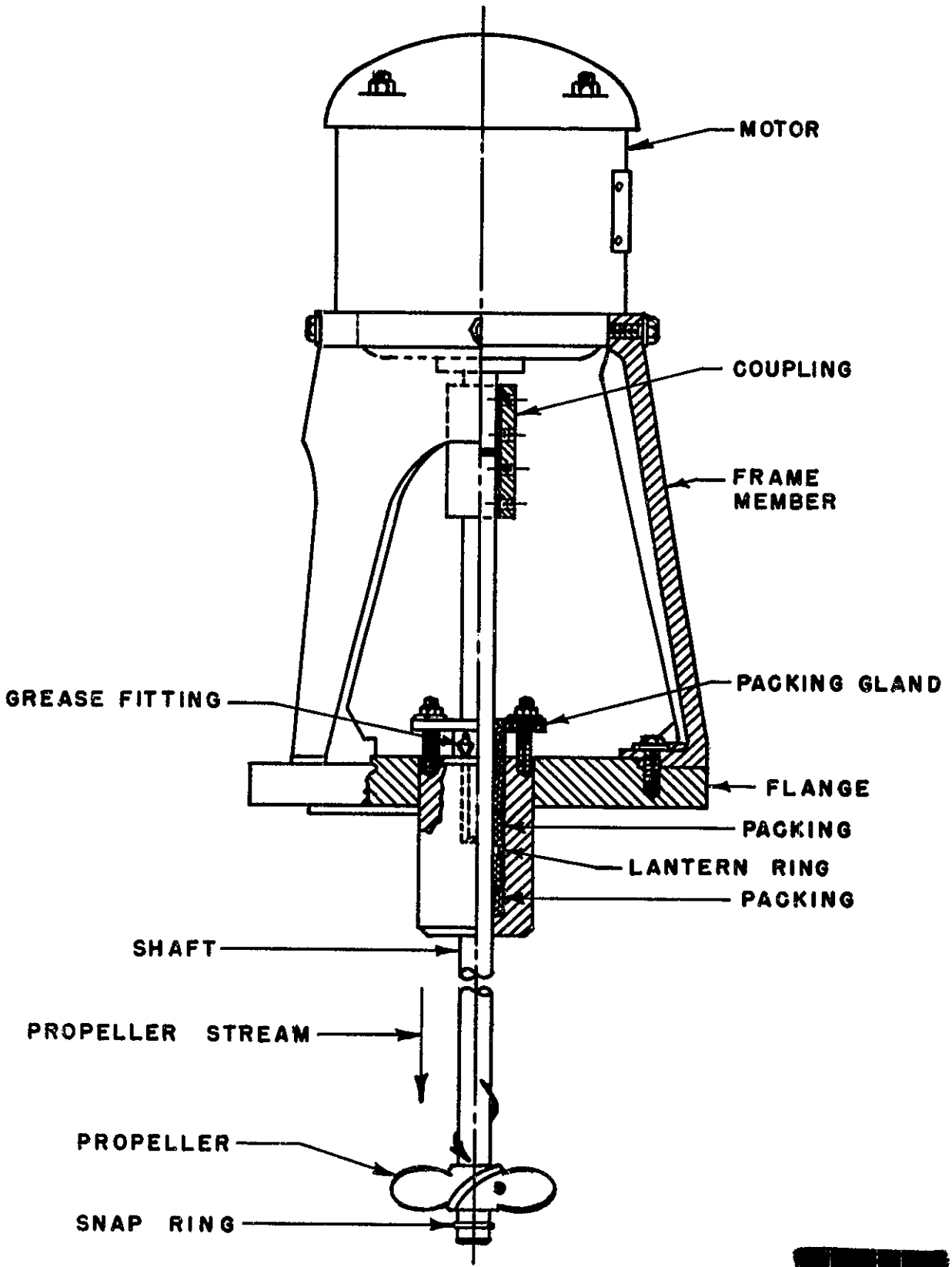

PART III: PLANT AND EQUIPMENT, continued

CHAPTER XV. REMOTE OPERATION AND MAINTENANCE

CONTENTS Page

A. PRINCIPLES OF REMOTE OPERATION AND MAINTENANCE 1502

B. CRANES 1502

1. Master Crane 1502
2. Slave Crane 1503
3. Hooks and Hoists 1504
4. Power System 1504
5. Operation 1505

C. REMOTE CONNECTORS 1505

1. Function 1505
2. Description 1505
   2.1 Pipe connectors 1506
   2.2 Electrical connectors 1506

D. SPECIAL TOOLS 1506

1. Impact Wrench 1506
2. Grabber 1507

E. DIVERSION BOXES 1507

F. REMOVAL AND REPAIR OF "HOT" EQUIPMENT 1508

1. Removal of Equipment 1508
2. Decontamination and Repair Facilities 1508
   2.1 Decontamination and Pool Cell 1509
   2.2 Hot Shop 1509
   2.3 Regulated Shop 1509
   2.4 Crane Maintenance Platform 1510

REFERENCES 1510

CHAPTER XV. REMOTE OPERATION AND MAINTENANCE

The high radiation levels prevailing in much of the Purex Plant necessitate interposition of massive shielding between personnel and processing areas. Routine operation and maintenance are carried out in many cases with no access to the process equipment. Instrument control, discussed in Chapter XVII, is extensively used. Methods of remote sampling of process streams, for laboratory check on instrument control, are discussed in Chapter XVIII. The methods and equipment used in performing remote operation and maintenance (except process-control instrumentation and sampling) are the subject of the present chapter.

A. PRINCIPLES OF REMOTE OPERATION AND MAINTENANCE

Process equipment located in the Canyon has been designed in so far as possible to give trouble-free service and to require a minimum of maintenance and attention. However, it is recognized that it may become necessary to remove, revise, or replace certain pieces of equipment. In compliance with these and other process needs a shielded Master Crane and a non-shielded Slave Crane have been provided.

Remote connectors and tie-down nuts, operated by an impact wrench hung from the Master Crane, provide means of remotely handling equipment, process lines, and electrical lines. Cell jumper lines connect process-line nozzles mounted on the walls to the equipment.

Equipment, once removed from the cell by the cranes, can be taken to the Railroad Tunnel for removal to the burial grounds or can be taken to the Decontamination Cell, Hot Shop, or Regulated Shop for any necessary decontamination and repairs.

In addition to the areas of remote operation in the 202-A Building Canyon, two diversion boxes, located outside the building, require remote-operating techniques. Radioactive process solutions may be routed outside the 202-A Building to the proper tank farm, tank, or crib through these diversion boxes. Jumpers in the boxes are changed remotely to route solutions through the proper lines.

B. CRANES

The remote-maintenance cranes (Master Crane and Slave Crane) located in the Processing Building (202-A) Canyon are depicted in perspective in Figure XV-1. A general description of these cranes follows.

1. Master Crane

The Master Crane is provided to do the majority of routine remote work involving vessels, rotating equipment, pipe jumpers, cell cover blocks, and to perform the process function of charging the dissolver. This crane performs all duties requiring impact wrenches, grabbers, and viewing aids.

The bridge of the Master Crane spans two rails 54 feet apart and located 26 feet above the Canyon deck. The bridge is electrically driven and can travel the length of the Canyon at speeds from 2 to 160 ft./min. A 40-ton hoist, a 10-ton hoist, two 1-ton hoists, and two 1/2-ton hoists are suspended from the bridge. The 10-ton hoist is mounted on the main 40-ton hoist trolley, and each of two monorail trollies hung under the girders has a 1-ton and 1/2-ton hoist.

Movements of the crane are controlled from a totally enclosed steel-shielded cab which travels behind a concrete parapet wall.

Crane operations are observed from the cab by means of two variable-power binocular-type periscopes mounted on either side of the crane bridge. Powers of 3/4, 2-1/2, and 5, with corresponding vision angles of 68°, 25°, and 12.5°, respectively, may be selected by the operator. The objective of each periscope may be moved across the Canyon and rotated about its axis to permit increased vision.

Also available are two closed-loop color television systems with 12-inch viewing screens to aid in remote maintenance. The television cameras are mounted on special tilting pedestals and supported, one under each bridge girder, by the 1/2-ton monorail hoists.

Constrasting colors and numbers are used to aid in visual observation from the crane cab. The walls, cell covers, and floors are white; the stainless-steel vessels and piping are unpainted; carbon-steel structural work, jumper braces, and vessel supports are grey; numbers, wall edges, and jambs are black; and hook guides, connector nuts, skirts, and a band around the cell blocks are yellow.

The cab is ventilated by an air-conditioning system designed to keep the temperature between 70 and 80°F. and to change the air in the cab 10 times per hour. A separate blower circulates cooling air over the motor-generator sets on the bridge.

2. Slave Crane

The Slave Crane has been provided to assist the Master Crane for those operations in which two cranes are required for removal of extra-tall equipment (e.g., the 2A Column, as discussed under F1, below), and to perform maintenance operations over areas where radiation levels are low. While assisting the Master Crane in "hot" maintenance work, the Slave Crane is controlled from the cab of the Master Crane. When the Slave Crane is used for low-radiation-level remote-maintenance work, it may be controlled from its own cab.

The Slave Crane is a standard industrial model, with one 40-ton hoist. The crane is located on a track 18 feet above the rails of the Master Crane in such a manner that it can pass over the lower crane as long as the 40-ton hoist hook is at its highest position. The Slave Crane has bridge speeds of from 2 to 160 ft./min., and it is free to travel the full length of the canyon.

The height of the Slave Crane places its cab above the concrete wall used to shield the Master Crane cab. Since the Slave Crane is only operated from its own cab for low-radiation-level work, sufficient radiation protection, notably from air-borne contamination, is provided by the cab walls and shatter-proof glass windows. These windows give the operator a direct view of the work below and no special viewing aids are required.

A blower, supplying filtered air, ventilates the cab. The blower has a capacity sufficient to maintain a pressure inside the cab, 0.25 inch of water higher than outside, while producing 10 air changes per hour. The cab exhaust air passes over the motor-generator sets to cool them.

3. Hooks and Hoists

All hooks have three directions of movement. The bridge travels lengthwise through the Canyon, the trolleys travel across the Canyon, and the hoists travel vertically. Hook throat dimensions, hoisting speeds, and trolley speeds are as follows:

Hook Data

Crane	Number of Hoists	Capacity, Tons	Hook Throat, Inches	Trolley Speed, Ft./Min.	Hoisting Speed, Ft./Min.
Master	1	40	6-3/4	1 to 50	1/6 to 8
	1	10	2-7/8	1 to 50	1/2 to 50
	2	1	--	1/2 to 25	1/2 to 28
	2	1/2	--	1/2 to 25	1/2 to 28
Slave	1	40	6-3/4	1 to 25	1 to 22

The 1-ton west hoist has a special hook designed with the throat opening away from the crane operator. All others open towards the operator.

4. Power System

The power supply and communication leads are brought to the crane through "L"-type collector shoes in the cabway and supply 440-volt three-phase current to the crane.

The cranes are powered by Amplidyne variable-voltage variable-speed direct-current drive systems, which provide high torque at low speed. Each driving motor with the exception of those operating the monorail trolleys under the Master Crane has a separate motor-generator set. One motor-generator set supplies the power for both monorail trolleys. Both trolleys cannot be used at the same time.

The lights on the Master Crane have been sized to provide an intensity of 150 ft.-candles on a 40-ft.-wide plane 50 ft. below the bridge. This is accomplished by using sixteen 1500-watt lamps under the main trolley hoist.

The Slave Crane has four 1500-watt lamps under the trolley.

5. Operation

Process functions and remote maintenance require the Master Crane to operate almost continuously. The Slave Crane is operated only when the radiation level is low enough for an operator to work in the unshielded cab or when both cranes are controlled from the Master Crane cab. When both cranes are controlled from the Master Crane an electric cable allowing 75 feet between cranes is plugged into a receptacle on the Slave Crane. This cable carries the circuits which allow the operator in the Master Crane to control the Slave Crane. While remotely controlled, the Slave Crane has one speed for trolley and hoist travel, the slowest for each direction (1 ft./min.), and two slow speeds for crane bridge movement. The bridge movement speeds will be adjusted in the 202-A Building Canyon after installation at values which will allow the operator in the Master Crane to have good control over the Slave Crane.

Both cranes have limit switches to prevent bridge, trolley, and hoist overtravel. Rail stops are also provided on bridge and trolley.

A short section of runway conductors near the Railroad Tunnel allows the operator in the Master Crane to control a car puller. The car puller moves railroad cars in the Railroad Tunnel to the desired position. A second control station for the car puller is located at the track level in the tunnel.

An intercommunication system (speaker and receiver) is mounted on the console of the Master Crane cab allowing voice-communication between this point, the Dispatcher's Office, and the Railroad Tunnel. A wall-type dial telephone is mounted on the cab wall and connected into the building telephone system by means of collector shoes and trolleys. The microphone of a public address system is in the Master Crane cab. The system's two speakers are located on the crane bridge.

C. REMOTE CONNECTORS

1. Function

A remote connector is a device for joining process piping, auxiliary lines, or electrical conduits by a single operation performed with an impact wrench operated remotely from the Master Crane.

2. Description

A connector consists of a fixed male and removable female joint held together by three latches. A drawing of a three-jaw pipe connector is shown in Figure XV-2. The latches, actuated by a screw with a rotating hexagonal nut, grasp or release a flange on the fixed portion of the connector. The hexagonal nut on all remote connector screws is 2 inches across the flat face so that one impact wrench will fit all connectors. An impact period of 10 to 20 seconds is generally sufficient to apply the torque required to tighten pipe connectors. Tightening of electrical connectors is almost instantaneous (impact time of less than 2 seconds).

2.1 Pipe connectors

Pipe connectors are installed either in a vertical or in a horizontal position, depending on the stationary portion of the cell piping to be connected. Vertical and horizontal connectors are identical in construction. The connectors are made to join 1/2, 2, 3, and 4-inch I.P.S. pipe. Three 1/2-inch I.P.S. pipes are joined simultaneously by one connector while 2, 3, and 4-inch I.P.S. pipes are joined individually. Contact between the two halves of the connectors is made at spherically ground mating faces. The surface of the male half is Type 347 stainless steel faced with a layer of Stellite No. 6. To provide a good seal, the female mating surface is provided with a Teflon gasket held in place by a retaining ring.

2.2 Electrical connectors

Electrical connectors, constructed of Parkerized carbon steel, are similar in principle to the pipe connectors, except that the mating faces of the two halves are provided with a close-fitting joint surrounding spring-loaded electrical contacts. The flanged joint is arranged to shield against possible overhead leakage into the connector while vent holes located on the bottom allow any condensation to escape.* One-inch-diameter conduit with No. 10 gage solid wire is used, except in a few special cases, in all electrical jumpers.

D. SPECIAL TOOLS

1. Impact Wrench

Electrically driven, reversible impact wrenches are used to make and break remote connections and to rotate remote hold-down nuts on tanks, columns, and other equipment. The wrenches can be attached to the 1/2-ton monorail hoists and can be operated either horizontally or vertically by changing the point of suspension. This is accomplished by lowering the wrench to the floor and sliding the suspension hook along the handle to a new position. A positioning device prevents the wrench from turning during operation by engaging with a connector catch or special stop. The electric line leading to the motor of the impact wrench is provided with a quick-disconnect electrical coupling so that other equipment such as hooks may be attached to the hoist. The wrench, shown in Figure XV-3, is driven through a train of gears, coupling balls, lugs, and springs by a reversible 3/4-horsepower electric motor. The motor applies a steady torque through lugs located on both the anvil and the hammer until a torque of 400 to 500 ft.-lb. is exceeded. When this torque is exceeded, the lugs raise the hammer compressing the hammer spring. As soon as the hammer lugs slide over the anvil lugs, the spring forces the hammer down and drives it against the next pair of anvil lugs delivering a sharp blow, which is

---

*) The electrical connectors in the Purex Plant are built to standard specifications of the National Electrical Code. They differ from the Redox-Plant electrical connectors, which are built to explosion-proof (Class 1, Division 1) standards because of the lower flash point of the Redox solvent.

transmitted to the nut. The wrench operates in either direction by reversing the motor rotation. Loose nuts, when removed from studs holding equipment in place, are retained in the socket of the impact wrench by a snap ring until they can be placed on dummy studs for future use.

2. Grabber

The grabber is a clam-shell bucket device for handling small pieces of equipment that cannot be picked up with crane hooks.

The tool is powered by a reversible fractional-horsepower electric motor that rotates a threaded shaft, which in turn opens or closes the bucket jaws. The lips of the jaws are used to grasp loose nuts and other small items. Pipe may be gripped in semicircular notches cut in the sides of the bucket jaws. A single pair of semicircular jaws are attached to one side of the bucket for handling vertical pipe.

E. DIVERSION BOXES

1. Function

Diversion boxes are provided to congregate liquid process waste lines in a central location for convenience in changing piping routings (without the use of valves), adding new lines, detecting leaks at junctions, and to reduce duplication of piping.

2. Description

The diversion boxes, 241-A-151 and 241-A-152, are concrete pits set in the ground with one foot and two feet, respectively, of concrete structure above the grade level. The section of each diversion box containing nozzles and jumpers is covered with concrete cover blocks which can be moved by a mobile crane.

Diversion Box 241-A-151 has three sections. The west section contains inlet piping, the center section contains nozzles and jumpers, and the east section contains outlet piping. An isometric drawing of this diversion box is shown on Figure XV-4.

Diversion Box 241-A-152 is divided into two sections. One section contains nozzles and jumpers and the other section contains piping to and from the nozzles. The inlet nozzles are connected to the upper two layers of piping.

2.1 Diversion Box 241-A-151

This box is located on the south side of the Processing Building (202-A). Liquid process waste lines from the 202-A Building are routed through this box to Diversion Box 241-A-152 for further rerouting and also to Cribs 216-A-2 and 216-A-4.

Leakage from jumper connections and piping is collected in a catch tank located near the diversion box. The contents of the catch tank can be jetted back to the diversion box and routed to the line required by the process operation. Jetting is not automatic and daily checks are required on the catch-tank liquid level.

Exit-line nozzles are located in the wall and floor. Ten spare stubs have been provided in the diversion box for future use. Two of these are for coating-waste lines and the remainder are for outside facilities such as cribs.

2.2 Diversion Box 241-A-152

Diversion Box 241-A-152, located near the 241-A Tank Farm, distributes process waste to the proper tank in the farm and also to various cribs. In case of leaks in the piping or jumper connections, conductivity probes sound an alarm in the Tank Farm Control House and Dispatcher's Office. When the leakage reaches a certain level in a sump, it is syphoned automatically to a small crib.

Five spare stub lines have been provided in this box for future tank farms. All nozzles in the box are mounted on one wall, one layer above the other.

F. REMOVAL AND REPAIR OF "HOT" EQUIPMENT

1. Removal of Equipment

Equipment removed from the 202-A Processing Building Canyon area for repair, inspection, or disposal, is replaced rapidly to maintain as near continuous operation as possible. Because of the high cost in time and money to decontaminate equipment prior to repair work, it is frequently economically advisable to install new equipment instead of repaired equipment. When disposal of a contaminated equipment piece is required, it is normally placed in a wooden box partially filled with sawdust, taken to the Railroad Tunnel, and mounted on flatcars for transportation to desert burial or disposal areas.

Equipment from the 202-A Building Canyon area is removed remotely by the Canyon cranes. The high location of the Slave Crane permits it to handle any equipment piece with one lift, except the 41-foot 2A Column. To remove this assembly both cranes work together, first tilting the column and then moving it down the Canyon in a horizontal position to the Railroad Tunnel for disposition.

2. Decontamination and Repair Facilities

Maintenance areas are provided at the west end of the Processing Building to decontaminate, inspect, or repair "hot" equipment after removal from the Canyon. Tanks, pumps, agitators, and other pieces of equipment are moved first to the Decontamination Cell and then to the Hot Shop or to the Regulated Shop depending on the degree of residual contamination and the repair work necessary.

2.1 Decontamination and Pool Cell

The Decontamination Cell is arranged to allow Canyon equipment to be placed in it for decontamination or storage. The cell can be serviced by either the Master or the Slave Crane. A Pool Cell located in the northeast corner of the Decontamination Cell is used to decontaminate and store tall highly contaminated equipment. The floor of the Decontamination Cell is stainless steel with an 8-inch-high flashing around the walls. The cell is equipped with electrical outlets and piping to supply breathing air, compressed air, steam, and decontamination solutions. A tank to flush and decontaminate rotating equipment is located in the cell.

An access doorway is provided between the Decontamination Cell and the adjacent Hot Shop.

2.2 Hot Shop

The east one third of the Hot Shop is accessible from the Canyon. Partially clean equipment from the Decontamination Cell may be lifted into the shop by either Canyon crane for contact maintenance work or further decontamination. The remaining portion of the Hot Shop is covered. A 1-ton jib crane and a 1-ton monorail crane service the covered area. The monorail crane runs the length of the covered area, through air locks, and into the Regulated Shop.

A 20-ft.-diameter shielded tank for pump and agitator work and a centrifuge test stand are located in the open area. Canyon cranes are used to move equipment to and from both of these test stands. The covered area contains racks to store one of each size or type pump and agitator used in the Canyon.

The Hot Shop, Regulated Shop, and Crane Maintenance Area are equipped with welding and electrical outlets. Oxygen, acetylene, compressed air, and argon are manifolded to each area from the main maintenance area.

Access to the Hot Shop is from the Regulated Shop through air locks.

2.3 Regulated Shop

The Regulated Shop is a maintenance area for work on equipment which has been decontaminated and disassembled in the Hot Shop. The tools necessary for simple repairs are available but no fabrication is done in this shop.

This area has a welding machine, electric grinder, drill press, and a test stand for valves, steam traps, and rotameters.

A monorail crane runs the length of the shop and connects to the monorail in the Hot Shop.

The shop is accessible from the Canyon Lobby through a corridor.

2.4 Crane Maintenance Platform

The Crane Maintenance Platform is used only for repair and routine work on cranes. It is a platform that extends across the Canyon on the west end. A bench for work on crane motors and other equipment is installed on this platform. As a maintenance aid, a cross-building monorail hoist is installed in the raised section of the roof directly above the maintenance platform. This hoist services both cranes.

REFERENCES

(1) BPF 7476 Pipe Connectors

(2) BPF 7378 Electrical Connectors

(3) BPF 7323 Manning, Maxwell and Moore, Inc. Crane

(4) BPF 7768 Impact Wrench

(5) H-2-55101 Diversion Box 241-A-151 Piping

(6) H-2-55952 Diversion Box 241-A-152 Piping

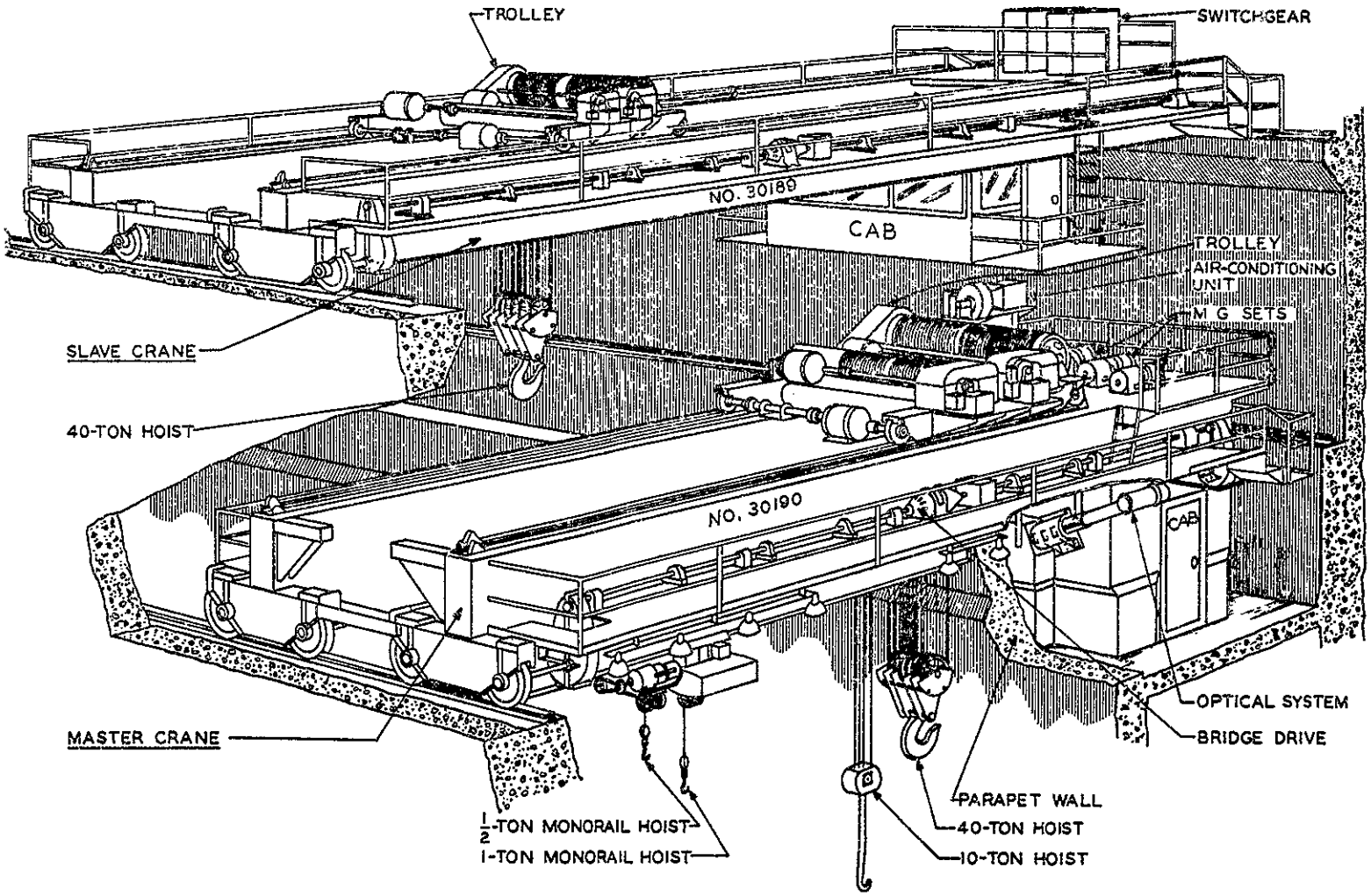

FIGURE XV-1
CANYON CRANES

1 ACTUATING SCREW
2 LATCH YOKE
3 LATCH GUIDE
4 LATCH
5 SCREW RETAINING WASHER
6 CONNECTOR BLOCK
7 PIPE NIPPLE
8 TEFLON GASKET
9 GASKET RETAINER RING
10 STELLITE #6 MATING FACE
11 CONNECTOR NOZZLE
12 POSITIONING GUIDE
13 KICK PLATE

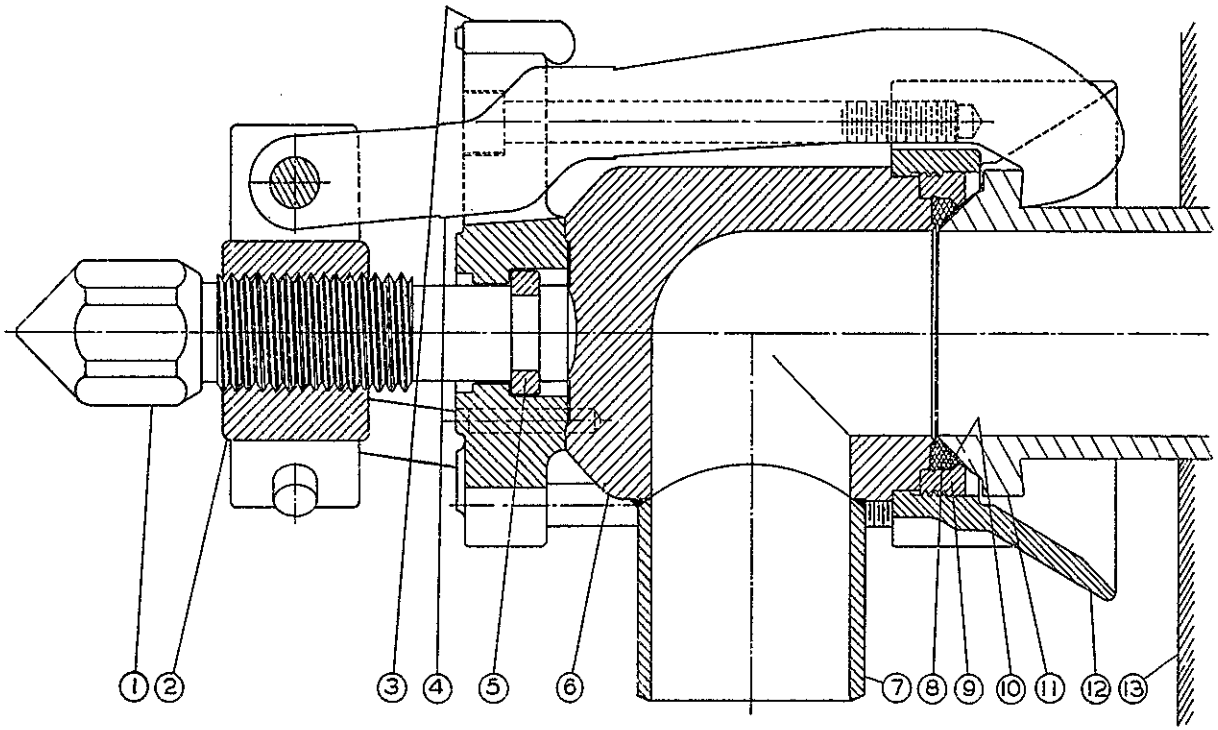

FIGURE XV-2

THREE-JAW PIPE CONNECTOR, VERTICAL MOUNTING

FROM DWG NO. H-2-52916

[redacted]

FIGURE XV-3
IMPACT WRENCH

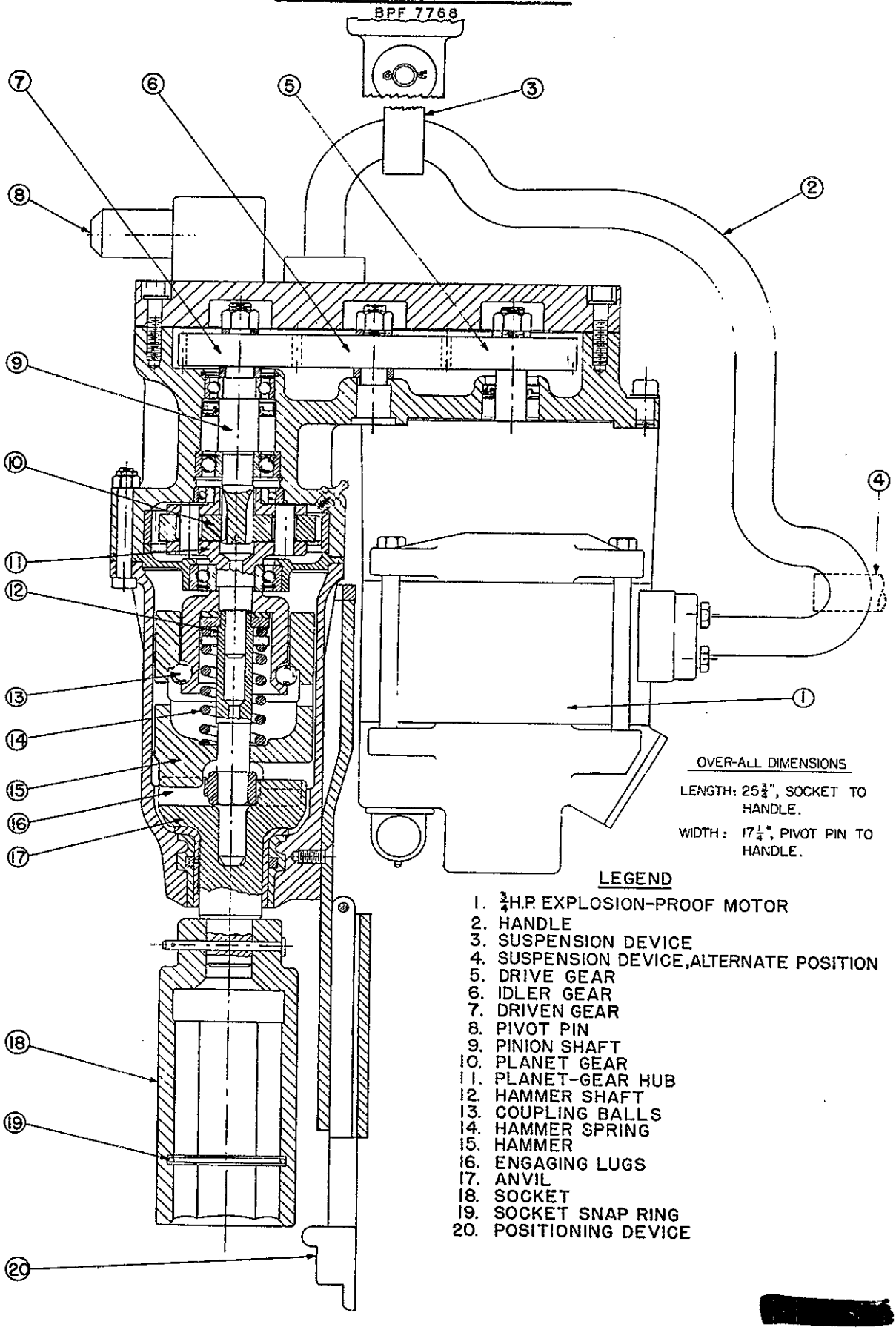

[redacted]

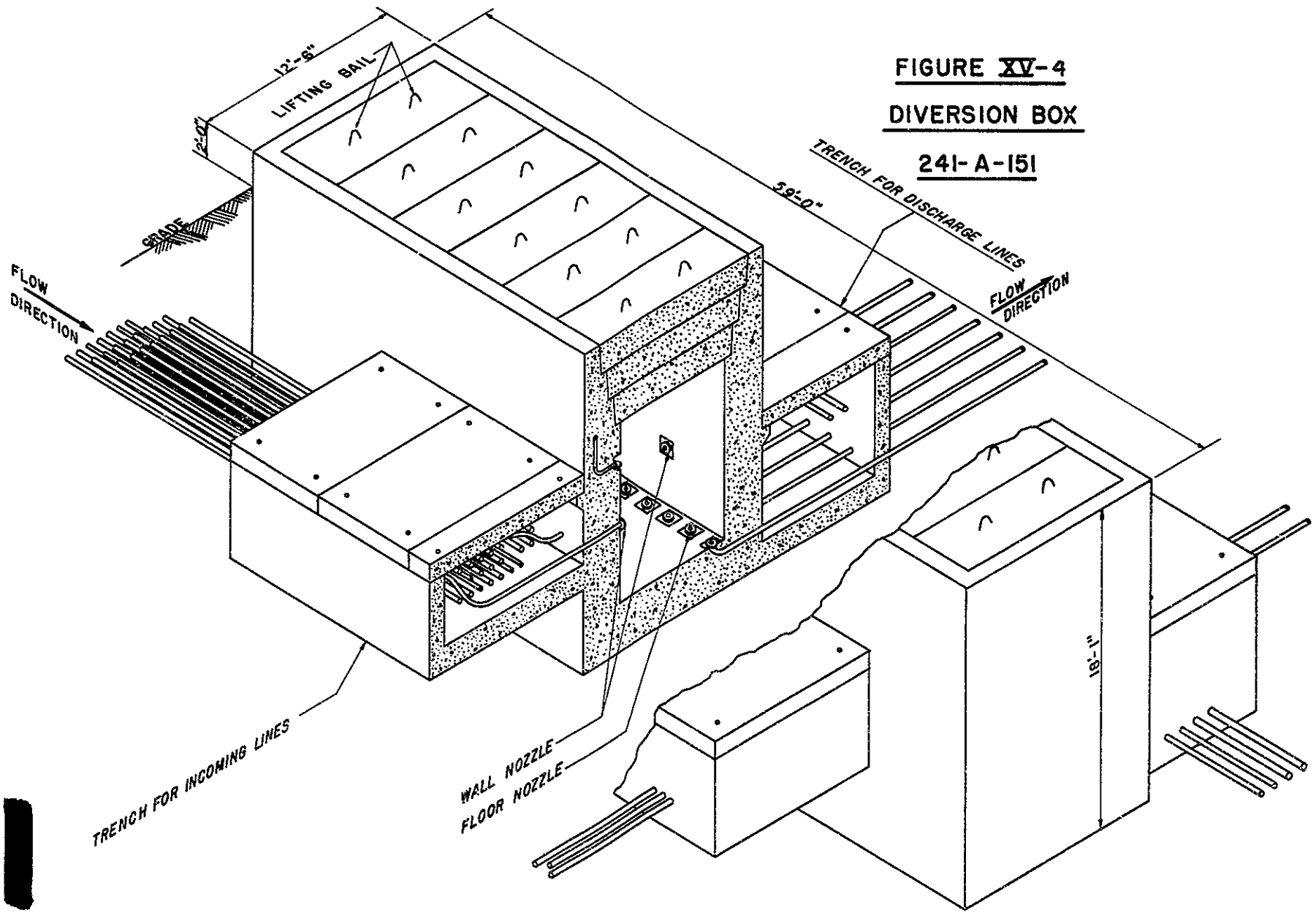

FIGURE XV-4

DIVERSION BOX

241-A-151

HW-31000

PART III: PLANT AND EQUIPMENT, continued

CHAPTER XVI. CONSTRUCTION MATERIALS AND PROTECTIVE COATINGS

CONTENTS Page

A. CONSTRUCTION MATERIALS OF THE PUREX PLANT 1602

B. STAINLESS STEEL 1603

1. General 1603
2. Welding of Stainless Steel 1604
3. Corrosion Phenomena 1605
   3.1 End-grain corrosion 1605
   3.2 Knife-line corrosion 1605
   3.3 Weld-crater corrosion 1606
   3.4 Crevice corrosion 1606
   3.5 Stress-corrosion cracking 1606
4. Equipment Presenting Corrosion Problems 1607
   4.1 Large concentrators 1607
   4.2 Nitric Acid Absorber 1609
   4.3 Vacuum Nitric Acid Fractionator 1609

C. PLASTICS 1610

1. Teflon 1610
2. Fluorothene 1611

D. PROTECTIVE COATINGS 1612

1. General 1612
2. Vinyl-Based Coatings 1613
3. Epoxy-Based Coatings 1614
4. Coating Repair and Decontamination by Painting 1614

REFERENCES 1616

CHAPTER XVI. CONSTRUCTION MATERIALS AND PROTECTIVE COATINGS

This chapter indicates the materials of which the Purex Plant and its process equipment are built and reviews the most important of the special corrosion and chemical and radiation stability problems.

A. CONSTRUCTION MATERIALS OF THE PUREX PLANT

The materials of construction selected for the Purex Plant were chosen because of their resistance to the corrosive attack and radioactivity of the process solutions and their ability to perform their intended function at a reasonable cost.

Steel-reinforced concrete has been used for the processing equipment enclosure cells, the cell covers, the various trenches and tunnels in the Processing Building (202-A), the Canyon walls and other, similar items, where radiation attenuation and structural strength are of prime concern. Where the concrete surfaces may possibly be exposed to radioactive materials, protective coatings have been employed to prevent the permanent contamination of the concrete.

Process equipment pieces that contact radioactive or acidic materials are constructed of nitric-acid-resistant stainless steels.

Carbon steel has been used for structural purposes such as tank and equipment supports, pulse-generator enclosure boxes, jumper bracing, counterweights, lifting bails, etc. Some of the piping carrying non-process solutions, such as that for cell fire-fog systems and wash-down systems, is also constructed of carbon steel. Where mild-steel structural work is exposed to potentially contaminated or acidic environments, protective coatings have been employed to prevent corrosion of the metal and to aid in the decontamination of the object.

Non-metallic materials occupy a small but important position in the list of construction materials used in the Purex Plant. Graphites have been used for process pump bearings and liquid throttle bushings, process agitator vapor throttle bushings, and pulse-generator piston rings. Teflon has been utilized as a gasket material where chemical inertness and temperature resistance are of prime importance. The perforated plates of the O and C-type columns and the Raschig rings of the 2A Column are manufactured of fluorothene to achieve desirable column performance.

Protective coatings have been employed to prevent the corrosion and contamination of carbon-steel and concrete surfaces, to aid in the decontamination of structures and to increase (by use of contrasting colors) the visibility within the cell enclosures. The protective coatings used are those which have been shown to be the most resistant to nitric acid and to organic solvent environments.

In general, the materials of construction of the Purex Plant are not unlike those of many modern chemical processing plants which handle nitric acid solutions or organic solvent solutions. However, there are some problems involving the corrosion properties of stainless steels and chemical and radiation stability of plastics and protective coatings employed in the Purex Plant which call for special consideration. Review of these problems is the subject of the following sections.

B. STAINLESS STEEL

1. General

Because of the corrosive nature of the majority of the process solutions of the Purex Plant, all of the process equipment pieces and pipelines that contain or contact process solutions are constructed of nitric-acid-resistant stainless steels. Although the vast majority of the stainless steel used in the Plant is Type 304L, several other types are used where the corrosive conditions involved and the required properties indicate superior service from a particular alloy.

Types 302, 303, and 304 stainless steels have been used for nuts, bolts, studs, set screws, pump shafts, agitator shafts, and similar objects which require strength, machinability, and corrosion resistance to process solutions. Objects fabricated from these alloys were used where no welding was required for installation. Pieces that were installed without welding in locations where they would be exposed to a corrosive atmosphere but not to corrosive liquids, e.g., flange connector nuts, studs, and guide dowels, are of Type 414. "Cold" process equipment, such as pump and agitator parts, that contact process solutions are constructed of Types 347 and 304. Type 304L is used for all of the process tanks, concentrators, condensers, solvent-extraction columns, process pipelines, transfer jets, similar objects that cannot be heat treated after welding, and all field-welded objects. In some approved instances Type 347 has been substituted for the specified 304L, particularly where no welding or only a limited amount of welding was involved and where the corrosive conditions are not too severe. In other approved instances, where the corrosive conditions are not too severe and where quench annealing was possible after welding, Type 304 has been substituted for Type 304L.

The choice of Type 304L for the bulk of the stainless steel to be used in the Purex Plant was not made solely on the basis of its corrosion resistance to particular process solutions, as other materials such as Type 329, Type 309 SCb, Carpenter Alloy 20, Duriron, titanium and tantalum have shown as good or better corrosion resistance to certain process solutions.(4) The choice of 304L was made, however, on its over-all performance under Purex-Plant conditions, its reliability, its availability at the time of construction, and its initial cost.

Tantalum, although untouched by even the most severe Purex corrosives, was generally considered too expensive to be justified even for special applications.

Titanium, likewise extremely resistant to process solutions, is an expensive newcomer in the field of corrosion-resistant metals. It has not been employed in the Purex Plant because the knowledge of its behavior is limited. (Titanium in certain nitric acid solutions is reported to be subject to unpredictable, violent explosions.)

Type 309SCb is superior to 304L for general Purex service if a good heat of 309SCb is obtained; however, due to the complexity of the alloy, heats are seldom reproducible, and a bad heat falls far short of the performance of 304L. Due to the large amounts of the scarce alloying metals required in Type 309SCb, its availability at the time of construction was limited and its price was high.

Carpenter 20 alloy will perform as well as 304L in certain Purex solutions, but for general Purex-Plant service its corrosion resistance is less than that of 304L.

Type 329, another newcomer to the corrosion field, surpasses 304L in certain Purex solutions. However, it is a ferritic alloy (more than 80% ferrite) and very little is known about the general behavior of ferritic alloys in nitric acid solutions.

Duriron, superior to 304L from a corrosion standpoint in some Purex solutions, is so brittle and glass-like that its use as a material of construction for remotely handled equipment was not considered feasible.

Type 304L has certain properties that make the alloy superior in some respects to some of the higher-alloyed metals. Its simple composition yields consistently more homogeneous heats than is possible with the complex alloys, which results in more uniform corrosion and an absence of local "pitting" and "pin-hole" failures. Compared to the niobium-stabilized steels, such as 309 SCb and 347, it is rare for 304L to exhibit the phenomena of "weld-crater corrosion", "stress-corrosion cracking", "star cracking", or "knife-line attack".

2. Welding of Stainless Steel

The integrity of welded objects subjected to corrosive conditions is only as good as the weakest point in the fabrication of the items. In general, the weakest point in the construction of a vessel lies in the welds, since quality control of welds is more difficult to maintain than it is in the manufactur of the plates, pipes, and structural pieces that go into the building of the vessel. For this reason considerable care must be taken in choosing welding materials and methods when corrosion-resistant stainless steels are to be welded.

Type 347 weld rod has been used fairly successfully for a number of years to weld acid-resistant stainless steels. However, in recent years Type 308L has been shown to have outstanding qualities as a weld metal for nitric acid service. Laboratory results (14) and a limited amount of field experience indicate that Type 308L weld deposits are less susceptible to "stress-corrosion cracking", "weld-crater corrosion" and "knife-line corrosion" than are the niobium stabilized Types 309SCb and 347. Carbon picked up in the weld during the welding procedure from carbonaceous oils, paints, and other contaminants at the weld area has generally not been found to be any greater a problem with 308L weld deposits than with the carbide-stabilized 347 or 309SCb weld alloys.

The stainless-steel vessels in the Purex Plant are welded with Types 308L and 347. Both the coated-rod and the inert-gas-shielded-rod techniques were used. Type 347 weld alloy has been used for fabricating all parts of all critical vessels such as the large concentrators, the Nitric Acid Absorber, the Dissolvers, the Dissolver Towers, and the Silver Reactors. (To obtain some field experience with 308L weld alloy, one exception was made, and some of the tube bundles for the large concentrators have been welded with 308L.) Field welding was accomplished with both Types 347 and 308L rod. Type 308L was used for welding most of the non-critical vessels.

3. Corrosion Phenomena

3.1 End-grain corrosion

Metals generally pick up a certain amount of impurities while in their molten condition. These inclusions generally are spherical in ingots or other cast objects. When ingots are rolled or are otherwise worked into plates, sheets, pipes, and other shapes, these spherical inclusions are deformed into stringers or laminar, pancake-like shapes, elongated in the direction of working. Under certain corrosive conditions, stainless steels have shown greater corrosion rates on surfaces that are perpendicular to the direction of working, such as the ends of pipes or plates, where the ends of these stringers and laminar inclusions are exposed, than on the surfaces parallel to the working direction. The phenomenon has been termed "end-grain corrosion" and any process, such as welding or solution annealing, which allows the elongated impurities to re-form into spherical shapes, helps to reduce the corrosion rates to normal.

3.2 Knife-line corrosion

Welded stainless steels, particularly those containing niobium, e.g., Types 347 and 309SCb, under severe corrosive conditions show a marked increase in corrosion rates in a narrow area immediately adjacent

to the weld metal. Corroded specimens exhibit thin cracks that follow the edges of the welds and have the appearance of being scored with a knife blade. Corrosion of this type has been termed "knife-line corrosion".

3.3 Weld-crater corrosion

When a weld bead is being steadily laid down with an electric arc welder, the weld metal and the parent metal surrounding the weld cool relatively slowly as they are kept hot by the slowly receding molten area under the arc. However, when the arc is broken and the bead is terminated, the pool of molten metal that remains at the last point of welding has no such gradually diminishing heat source and consequently cools more rapidly than any of the weld in the steadily laid-down portion. The metal in this termination pool, which generally has the shape of a tiny crater, exhibits a considerably different crystal structure from that of the remainder of the weld. Under certain corrosive conditions, stainless-steel welds show corrosion rates at the points of weld termination many times greater than that of the weld as a whole. This type of corrosion, termed "weld-crater corrosion", is most frequently noticed in weld metals containing niobium as a stabilizing agent, as in Types 347 and 309SCb.

3.4 Crevice corrosion

Intense attack in corrosive solutions is often observed in a deep, thin crevice between the adjacent parts where two metal surfaces touch or nearly touch. Such a condition exists where pipes are laid onto flat tank bottoms. Crevices are also formed when tubes are rolled into their tube sheets or are welded on only one side of the tube sheet.

Because of the stagnation of solutions within the crevice, solutions are concentrated within the crevice and are not replaced with the more dilute process solutions. This circumstance leads to the development of a small concentration cell, with the crevice becoming anodic to the surrounding surfaces and results in electrochemical corrosion within the crevice. Corrosion generally progresses until the crevice has been enlarged so that surrounding solutions can circulate freely through the area and eliminate the concentration gradient.

"Crevice corrosion" may be prevented by a number of fabrication and design methods, such as avoiding contact between plane and curved surfaces, by welding the lips of crevices together or by enlarging the crevice sufficiently to assure liquid circulation.

3.5 Stress-corrosion cracking

High stresses are created within a metal when it is deformed beyond its elastic limit by bending, drawing, or punch forming. Cooled welds likewise contain such "locked-up" stresses. Under extreme conditions tiny hairline cracks will be observed in the areas of high stress. However, with some

materials a stressed specimen which originally shows no cracking will show stress cracks after exposure to certain corrosive conditions. Knowledge of this phenomenon is limited, but all metals exhibit it to a certain degree with some corrosives. Type 347 stainless steel is subject to this type of attack by Purex-process solutions, while Type 304L is relatively unsusceptible to it.

4. Equipment Presenting Corrosion Problems

The majority of the stainless-steel equipment pieces such as tanks, solvent-extraction columns, condensers, and pipelines are not expected to exhibit any undue corrosion under normal operating conditions. However, certain equipment pieces such as the large concentrators, the Nitric Acid Absorber, and the Nitric Acid Fractionator are more susceptible to corrosion attack.

4.1 Large concentrators

The Canyon contains five identical large concentrators (described in Chapter XIII) for the concentration of uranium streams, for the reduction of the volume of the aqueous waste, and for the recovery of nitric acid from the waste streams. These pieces of equipment are fabricated entirely of Type 304L stainless steel and are welded with Type 347 alloy, except some of the tube bundles which are welded with 308L alloy.

The Acid Concentrators are expected to operate with about 40% nitric acid in the bottoms and with about 12% nitric acid on the bubble trays. No chloride accumulation is expected on the bubble trays and the bulk of the chloride entering with the feed is expected to be concentrated and removed with the bottoms. Under these conditions laboratory work has indicated that a corrosion rate of approximately 0.001 inch per month can be expected for those portions of the vessel shell that are submerged in the boiling liquid, and 0.0002 inch per month for those portions that are exposed to the vapors.(11) These figures apply with fair assurance for the parent-metal (or wrought) portions of the vessels, predictions of the corrosion rates of the welds and weld areas being subject to wide variations, depending on the technique and care used in welding, as well as on the weld alloy employed.

The corrosion rates of stainless steels have been found to be a function of the metal temperature. Heat-transfer surfaces operating with temperatures higher than the surrounding liquid exhibit higher corrosion rates than surfaces that are in thermal equilibrium with the corrosive liquid.(4) Thus the wrought structure of the heat-exchanger bundles in the Acid Concentrators can be expected to show corrosion rates of about 0.009 inch per month when operated with a steam temperature of 125°C., 0.010 to 0.017 inch per month at 145°C. or about 0.020 inch per month at 165°C., compared to approximately 0.001 inch per month for the submerged portion of the shell which operates at about 110°C.(4)

Several features intended to extend the life of the tube bundles by protecting the weak spots of the units have been incorporated into the design of the concentrator heat exchangers. To eliminate the possibilities of "knife-line attack", to which welded and drawn pipe is susceptible, extruded 304L tubing was used for the heat-transfer tubes. The heat-transfer tubes are 1/8 in. shorter than the outside dimensions of the tube bundle, resulting in the ends of the tubes being recessed into the tube sheets 1/16 in. The tubes were welded to the tube sheets on the open side using an inert-gas-shielded tungsten-arc process. No filler rod was used in welding the tubes to the tube sheets; instead, the 1/16-in. shoulder of the tube sheet that projected beyond the ends of the tubes was melted and fused to the end of the tube itself. This procedure (opposed to fillet welding of projecting tubes) eliminated the possibilities of weld corrosion failures stemming from filler-rod weld metal, and it also sealed over the ends of the tubes, thereby eliminating an opportunity for "end-grain corrosion" to which Type 304L is susceptible. To protect the tube-to-sheet welds further, the tube sheets are 1-1/2 in. thick which reduces the heat transfer through the tube sheet, resulting in lower skin temperatures at the weld areas and consequently lower corrosion rates.

The uranium concentrators are expected to operate with about 4% nitric acid in the bottoms and from about 0% nitric acid on the upper bubble-cap tray to about 1% on the lowest tray. The bulk of the chloride ion entering with the feed is expected to be removed with the bottoms liquid and no chloride accumulation on the bubble trays is anticipated. Under these conditions, laboratory results indicate that the corrosion rates of the shells of the vessels, both in the vapor phase and the liquid phases, will be less than 0.0001 inch per month.(18) Average corrosion rates on the heat-exchanger tubes are expected to be on the order of ten times this value.

The bubble-cap trays of the uranium concentrators are expected to operate with solutions ranging from 0% to 1% in nitric acid, and the corrosion rate, both in the liquid and vapor, is expected to be on the order of 0.0001 inch per month, or less.

Laboratory tests have shown that the corrosion rate of Type 304L is about 0.0001 inch per month in boiling nitric acid solutions of the strength handled on the Waste Concentrator bubble trays.(16) However, due to end-grain corrosion and vapor-velocity effects, the corrosion rate of the risers and bubble caps is expected to be on the order of 0.001 inch per month.(3)

To minimize "crevice corrosion" that has been observed to occur between the vapor risers and the bubble trays, the risers were inserted 1/8 in. into the 1/4-in.-thick trays and welded from underneath using a tungsten arc and no rod, i.e., the 1/8-in. shoulder of the tray supplied the filler material. Using this method, fusion between the riser and the tray extends to the upper side of the tray, eliminating the crevice between the two and the resulting "crevice corrosion". Welding in this manner is also expected to help stop "end-grain corrosion" at the lower ends of the risers.

4.2 Nitric Acid Absorber

The Canyon contains a Nitric Acid Absorber (described in Chapter XIII) which may also be operated as an atmospheric-pressure nitric acid fractionator* for the concentration of nitric acid recovered from the waste by the Acid Concentrators. This unit is fabricated entirely of 304L stainless steel and is welded with 347 alloy.

The unit is fed with hot vapors, about 12 weight per cent nitric acid, from the No. 2 Acid Concentrator. When the unit is operated as an absorber, i.e., without steam being supplied to the reboiler, fractionation occurs only above the feed point and about 30% nitric acid is removed from the bottom of the unit. The bubble trays handle acid ranging from about 0% for the top tray to 30 wt. % for all of the trays below the feed point.

When steam is supplied to the unit, i.e., when it is operated as a fractional-distillation column, fractionation occurs above and below the feed point. Under these conditions the bubble trays handle acid ranging in strength from about 0% on the top tray, to about 30% at the feed point, and about 60 wt. % on the bottom tray. When the unit is operated in this manner, 60% nitric acid is removed from the reboiler.

Trace quantities of chlorides introduced into the Nitric Acid Absorber with the feed solution are expected to accumulate between the second and fourth bubble trays above the feed point, i.e., on bubble trays 10, 11 and 12 (from the bottom of the unit).(10)(7) These trays are fitted with pipelines for periodic sampling of the tray liquid to determine the necessity of purging the system of chloride-bearing liquid. The pipes may be used to drain to waste a small quantity of liquid containing high chloride concentration. Demineralized water is used as a reflux for the fractionator in lieu of condensed overhead vapors, to prevent the re-entry of chloride that passes out with the overhead vapors.

4.3 Vacuum Nitric Acid Fractionator

The purpose of the Vacuum Nitric Acid Fractionator is to concentrate the 30% acid normally coming from the Nitric Acid Absorber to 60% for reuse in the process. Fractionation is carried on under vacuum to realize a reduction in the corrosion rates of the materials of construction that are used in the unit.(3)(13)(15)(16) Fractionation of 60% nitric acid at 100 mm. Hg total pressure is accomplished at about 70°C. which is about 50°C. lower than the operating temperature at 760 mm. Hg total pressure. With this decrease in temperature, about a ten-fold decrease in corrosion rates is realized.

---

*) Operation of the Nitric Acid Absorber as an atmospheric-pressure fractionator is intended only as a temporary expedient prior to installation of the Vacuum Nitric Acid Fractionator.

The use of vacuum fractionation was recommended for use in the Purex Plant after the original scope had been completed. It is being provided for the Plant under a separate project (No. CG 598). Consequently, the Plant will start up without it and operate by using the Nitric Acid Absorber as an atmospheric-pressure fractionator until the vacuum unit is available.

C. PLASTICS

Two plastics distinguished for wide chemical resistance, teflon and fluorothene -- and adequately stable towards radiation -- have found limited use in the "hot" areas of the Purex Plant. Teflon is used as a gasket material; fluorothene, as the perforated-plate or packing material in certain of the solvent-extraction pulse columns.

1. Teflon

"Teflon" (actually a DuPont trade name) is used here as a generic term to designate tetrafluoroethylene resins, the general formula of which is expressed as $(CF_2\text{-}CF_2)_x$. Although it is classed as a thermoplastic, the polymer does not become fluid at high temperature, but at 620°F. it undergoes a transition from the normal crystalline state to an amorphous gel.

Teflon is completely resistant to the chemicals in the solutions encountered in the Purex process. The extent of its degradation upon beta and gamma irradiation is indicated by the following table(12)(20)(21):

Irradiation, Rads	Observations
$< 10^5$	No detectable changes in properties.
10^5	Detectable decrease in flexural fatigue strength.
10^6	Tensile strength decreased about 50% of initial value.
9×10^6	Gaskets in flanged joints may crack and develop leaks under operating conditions.
10^8	Tensile strength essentially zero.

Tests have failed to reveal important differences between the effects of equivalent doses of beta and gamma radiations.

Under certain conditions combining acidity and radiation stainless steels have exhibited excessive corrosion rates when they have been in contact with teflon.(9)

Except for the areas in the vicinity of the Dissolvers, the HA Column, and the No. 1 Acid Concentrator, the radiation level in the Purex Plant is normally

low enough so that degradation of teflon by radiation is negligible. Teflon gaskets have given satisfactory service in the Bismuth Phosphate and Redox Plants under radioactive conditions similar to those under which they are used in the Purex Plant.

Teflon is also degraded by temperatures in excess of 400°F., and under these conditions the material gives off toxic gases. The amount of these gases liberated does not become appreciable until 600°F.

The principal use of teflon in the Purex Plant is as a gasket material. It is used in gasketing the pipelines joined with standard flanges and those joined with remote connectors. It has also been used for gasketing pump mounts, agitator mounts and other large equipment pieces to process vessels.

Most of the mechanical properties of solid teflon gaskets are comparable to those of the best grades of rubber-bonded asbestos and gasket design for the two is quite similar. However, the compressive strength, thermal expansion and resilience properties of teflon can cause some difficulty in gasket applications. The compressive strength of teflon gaskets is such that an almost direct relationship is exhibited between the deformation (thickness changes) and applied gasketing pressures; consequently, teflon gaskets can be pinched and deformed by excessive or non-uniform tightening of flanges or by the use of badly warped flanges. The recovery of such deformed teflon gaskets is practically nil, and after a period of service under conditions of thermal cycling, flanged joints gasketed with teflon have a tendency to develop leaks due to insufficient flange pressure even though the initial installation was adequate. Despite the aforementioned difficulties which can result from the mechanical properties of teflon, its chemical and radiation resistance make it the best material available for the service involved.

2. Fluorothene

"Fluorothene" (actually a Union Carbide and Carbon trade name) is used here as a generic term to designate the trifluorochloroethylene resins, the general formula of which is $(CF_2\text{-}CFCl)_x$. It is also known as polytrifluorochloroethylene, MFP-10, P-10, and Kel-F. It is a colorless, thermoplastic resin that may be molded by conventional equipment.

Fluorothene is completely resistant to all of the chemicals in the solutions encountered in the Purex Plant. Like teflon, it is degraded by high beta and gamma radiation, as shown in the following tabulation.(12)

Irradiation, Rads	Observations
$<10^6$	No detectable changes in properties.
10^6	Appreciable decrease noted in flexural fatigue strength.
10^7	Modulus of elasticity increased by about 10%. Tensile strength beginning to drop off sharply.
10^8	Material extremely brittle. Flexural fatigue strength decreased by about the square root of the original value.

Tests have indicated no major differences between the effects of equivalent doses of beta and gamma radiations.

The principal use of fluorothene in the Purex Plant is for the perforated plates in the HC, IC, 2E, IO, and 20 Columns and for Raschig rings in the 2A Column. The plastic sieve plates, in addition to being exposed to the corrosive column contents and radiation, are subjected to cyclic flexural stresses caused by the pulsing of the column contents through the cartridge.

Samples of perforated fluorothene plates, irradiated in dissolver solution to levels up to 3.9×10^7 rads, have undergone without failure 5.2×10^8 cycles of flexing (equivalent to approximately 15 years in the Purex-Plant pulse columns) at a maximum fiber stress of 75 lb./sq. in., which is at least twice as high as will be obtained in the Purex-Plant columns. The highest expected irradiation rate to which fluorothene plates will normally be exposed, occurring in the HC Column, is conservatively estimated at 200 rads/hr. It would, at this rate, require 25 years of exposure to reach the test value of 3.9×10^7 rads.

D. PROTECTIVE COATINGS

1. General

Protective coatings are used in the Purex-Plant processing areas with several objectives. They are used (a) to protect concrete surfaces or non-stainless-steel items from corrosion by chemical atmospheres; (b) to prevent contamination from penetrating into the pores of concrete surfaces and increasing the background radiation levels; (c) to assist in the decontamination of metal or concrete surfaces by presenting a continuous, non-porous film to the contamination source; and (d) to assist in the lighting of work areas, particularly where the viewing of work area is limited to indirect optical means, by providing a clean, white coating to objects that would otherwise be dark in color.

Protective coatings in the processing areas are expected to resist one or more of the following conditions: (a) aqueous or organic nitric-acid-bearing process solutions, (b) nitric acid vapors from process solutions, (c) kerosene-type organic solvents in process solutions, (d) tributyl phosphate in process solutions, (e) radiation at the prevailing levels, (f) highly oxidizing solutions from decontamination procedures, or (g) caustic solutions from decontamination procedures.

No one protective coating has been investigated that will satisfy all of the requirements that are imposed on process-area coatings and that is practical from an application standpoint. As a result, two general types of coatings are employed in the processing areas of the Purex Plant, namely an epoxy based coating (Amercoat 74) and the vinyl-based coatings (Amercoat 55 and 33). Table XVI-1 shows the areas in which each coating is used.

2. Vinyl-Based Coatings

Vinyl-based protective coatings are basically copolymers of vinyl chloride and vinyl acetate. They are all resistant to organic acids, alkalies, and hydrocarbons but are softened or dissolved by aromatic and chlorinated hydrocarbons, by esters, and by ketones. They have a greater resistance than most organic coatings but are not invulnerable to oxidizing environments. The vinyl-based coatings are not recommended for service at temperatures above 150 to 160°F., since the vinyl resins are thermoplastic and begin to soften just above these temperatures.

The vinyl coatings form their films solely by the evaporation of solvents from the paint mixture after it has been applied to a surface; thus they do not require any catalyst or activator additions prior to application and are ready to use as they are packaged by the manufacturer.

Amercoat 55 is a three-component, vinyl-based system employing prime, body, and seal formulations. The standard application procedure uses one prime coat, two body coats, and two seal coats. Each component is a vital part of the system and performs a specific function: viz., the prime coat controls the adhesion of the coating to the surface coated; the body coats impart resistance to abrasion and gouging, and prevent the formation of pinholes and thin spots on edges and protrusions; and the seal coats provide the chemical resisting properties of the finished film.

Amercoat 33 is likewise a vinyl-based system, but it employs only one component, which is applied in three or more coats, depending on the film thickness desired. To gain the simplicity of a single component, Amercoat 33 sacrifices both chemical and physical resistance and is used only where mild chemical resistance suffices and where the abrasion-resistance and adhesion requirements are not difficult.

Neither Amercoat 55 nor Amercoat 33 will withstand tributyl phosphate (TBP), hexone, or carbon tetrachloride. These coatings were not applied where solvent exposure was anticipated.

3. Epoxy-Based Coatings

Amercoat 74 (formerly Amercoat 1574) is a tri-component, epoxy-based system, employing prime, body, and seal formulations. The standard application procedure involves one prime coat, two body coats, and two seal coats. The various coats perform the specific functions described in the preceding subsection for Amercoat 55. Each component of this system must be mixed under controlled conditions with the proper amount of a curing agent or catalyst (supplied by the manufacturer), added immediately before use.

While the resins that form the epoxy coatings are soluble in organic solvents in their initial state, the addition of the curing agent causes the coating to undergo chemical changes after the solvents have evaporated. These chemical changes result in polymerization and cross-linking of the molecular structure, producing a surface film with excellent resistance to aromatic and chlorinated hydrocarbons, to esters, to ketones, and to other organic solvents, as well as to a wide range of acids, alkalies, and salts of moderate strength. The disadvantage of the epoxy-type coatings is their lack of resistance to oxidizing acids. Amercoat 74 is not recommended for service against sulfuric acid above 60%, nitric acid above 10%, or acetic acid above 2% concentration.

4. Coating Repair and Decontamination by Painting

Vinyl coatings may be repaired simply by applying the repair coats over the old coatings, the ketone solvents in the fresh paint being sufficient to soften the old vinyl coating and effect a fusion between the new and the old coats. Where breaks in coating have penetrated to the base material a repair coating consisting of the original number and kinds of coats is recommended. To anchor hard-to-remove radioactive contamination to vinyl-coated surfaces by covering the contamination with paint, it is sufficient to apply a single coat of Amercoat 33 or of Amercoat 55 seal.

Epoxy coatings are not easily repaired after the polymerization is complete as the film is not softened by the solvent of the repair coats and no fusion of the repair coat to the original coat is effected. It is essential therefore in repairing cured epoxy coatings that the surface to be repaired be conditioned by the application of a special "tie coat" or physically roughened by sanding or light sand blasting. Any repair coating or coating applied for "decontamination" by overcoating should consist of the same number and kinds of coats that were contained in the original coatings since the adhesive properties of the seal coats without the prime coat and body coats are poor.

The application of vinyls over epoxys and vice versa presents some additional problems. Overcoating fully cured epoxy coatings with a vinyl material

will result in poor adhesion between the two materials if a tie coat is not employed or if the epoxy film is not roughened prior to the vinyl application. However, if the vinyl is applied while the epoxy resins are only partially polymerized and still vulnerable to the solvent structure of the vinyl formulation, a satisfactory bond may be realized between the two coatings.

Care must be employed in overcoating a vinyl film with an epoxy formulation as there is a possibility that the vinyl will be "lifted" from the base material. The "lifting" of the vinyl coat is a result of the epoxy solvent structure which tends to penetrate the vinyl film and to collect on the base material, thus destroying the bond between the film and the base material. As the solvent penetrates the film it also causes some swelling and this, coupled with the loss of bond to the base material, results in the vinyl coating wrinkling free in large sheets. This difficulty may be overcome and excellent adhesion attained between the coatings if the first coats of the epoxy formulation are applied lightly, thus decreasing the amount of solvent deposited on the vinyl film until a solvent resistant epoxy film is built up.

Laboratory results,(17) obtained after the painting of the Purex Plant was begun, indicate that repaired coatings or new surfaces to be painted with Amercoat 55 can be made more resistant to nitric acid than the surfaces coated by the method originally used.

The Amercoat 55 system as applied to the surfaces of the Purex facility consists of one prime coat, two body coats, and two white seal coats. This will protect concrete from the hot fumes from a 20% nitric acid solution at 80°C. for about three days or from complete immersion in 60% nitric acid at room temperature for about two weeks. However, an Amercoat 55 system consisting of one prime coat, one body coat, two black seal coats, and one white seal coat has successfully protected concrete and metal surfaces from the hot fumes from a 20% nitric acid solution at 80°C. for periods in excess of forty days.

Where white is not a necessary final color, the substitution of a third black seal coat for the final white seal coat results in a coating of still greater acid resistance.

REFERENCES

(1) E. I. DuPont De Nemours & Co., "Teflon-Tetrafluoroethylene Resin", Polychemicals Department Booklet.

(2) The M. W. Kellog Co., "Physical, Electrical, Chemical, and Mechanical Properties of Kel-F", Technical Bulletin No. 1-3-53 (1953) Pp. 1-6.

(3) R. D. Dierks and L. C. Amos, Private communication re the corrosion of stainless steels in simulated Purex large concentrators and acid fractionator solutions and anticipated Plant corrosion rates. H.A.P.O. December, 1954.

(4) R. D. Dierks and N. D. Groves, Private communication re the corrosion of stainless steels in simulated Purex solutions and anticipated Plant corrosion rates. H.A.P.O. December, 1954.

(5) ANL-5039 Chemical Engineering Division Summary Report for January, February, and March, 1953. S. Lawroski and C. E. Stevenson. 5-12-53. Pp. 23-29.

(6) KLX-1092 Summary Report of the Gasket Development Program. E. W. Ruhl. 8-29-51. Pp. 14-41.

(7) NYO-1182 Process Engineering Report on the Effect of Chloride on the Design and Operation of Nitric Acid Recovery Facilities. F. G. Walters, F. G. Winn, and H. H. Bulkowski. 10-15-53.

(8) ORNL-928 Physical Properties of Irradiated Plastics. O. Sisman and C. D. Bopp. 6-29-51.

(9) ORNL-1210 Corrosion Data from the O.R.N.L. Purex Pilot Plant Acid Recovery Unit. J. W. Landry and J. W. Ullmann. 3-25-52.

(10) HW-24641 Progress Report, Chemical Development, May, 1952. F. W. Woodfield. 5-31-52.

(11) HW-27821 Corrosion of Stainless Steels in Purex Acid Concentrators. K. L. Sanborn. 4-23-53.

(12) HW-29007 Stability of Fluorothene Under Exposure to Gamma Radiation. K. L. Adler. 8-11-53.

(13) HW-30484 Acid Fractionators -- Trip Report to DuPont Co. and Mallinckrodt Chemical Works December 28 - 31, 1953. A. M. Platt. 1-4-54.

(14) HW-30551 Determination of a Corrosion Resistant Welding Alloy for Welding Types 304L and 347 Stainless Steels. W. R. Smith. 5-13-54.

(15) HW-30600 Vacuum Nitric Acid Frationation in the Purex Plant. R. J. Sloat et al. 1-26-54.

(16) HW-31030 Progress Report, Chemical Development, February, 1954. F. W. Woodfield. 2-26-54. P. 9.

(17) HW-32663 Progress Report, Chemical Development, July, 1954. F. W. Woodfield. 7-30-54. P. 9.

(18) HW-32878 Corrosion of Austenitic Stainless Steels in Chloride Bearing Purex Process Streams. K. L. Sanborn. 8-31-54.

(19) HW-32964 Progress Report, Chemical Development, August, 1954. F. W. Woodfield. 8-31-54. Pp. 6-7.

(20) HW-33969 Progress Report, Chemical Development, November, 1954. F. W. Woodfield. 11-30-54.

(21) HW-34332 Progress Report, Chemical Development, December, 1954. F. W. Woodfield. 12-31-54.

TABLE XVI - 1

PROTECTIVE COATINGS IN THE PUREX PLANT

Area	Amercoat 74	Amercoat 55	Amercoat 33
276-A Building	F W T		
Organic Feed Tank Room	F D		
Sample Gallery	F D		W C T
Process Cell L	F W T		C
Process Cells G, H, I, J, K and west section of F	F D		W
Pipe Trench west of F Cell partition	F D		W
Air tunnel west of F Cell partition	F D		W C
Pipe Shaft #2	F W T		
Miscellaneous tunnels and chases containing organic piping	F W		
Pool Cell		W	
Decontamination and Storage Cell		W T	
Process Cells A, B, C, D, E and east section of F		F D	W
Pipe Trench east of F Cell partition		F D	W
Air tunnel east of F Cell partition		F D	W C
Hot Shop		F	W T
Acid Storage Vault		F D	W T
Battery Room		F	
Airlock #1		F	
PR Room and PR Vault			F W C T
Pipe and Operating Galleries			F W
Canyon Lobby			F D
Canyon			F D T
Cell cover block jamb (wall and ledge)			All surfaces
Cell cover blocks			All surfaces
Pipe Trench cover blocks			All surfaces
Jumper bracing, vessel supports, etc.			All surfaces
Crane Cab Gallery and Crane Maintenance Platform			F D
Slug Storage Basin			F W
Regulated Shop			F D T
Railroad Tunnel			F D
Hot Shop ventilation covers			All surfaces
Car Puller Machinery Room			F D
Laboratory Solid Waste Vault			F W T
Storage Room			F D T
SWP Supply Storage Room, Clean SWP Laundry Room, Used SWP Laundry Room, Hot Change Rooms #1 and #2, Personnel Decontamination Rooms, men's toilet #1, and janitors' closet #2			F
Corridors #1, #1A and #6			F W T
Plenum Chambers #1, #2, #3 and #4			F W C
Exhaust filter boxes #1. #2, and #3			F W C
291-A Tunnel			F W C
Trap Pits #1, #2, #3, #4, and #5			F D
Airlock #11			F W C T
Airlocks #3 and #9			F D T
Airlock #10			F D
Airlocks #5 and #6			F
Stairs #2, #5, #11, #13, and #15			F D T
Stair #19			F D
Stairs #7 and #12			F

Legend:
F = Floor
W = Walls
C = Ceiling
D = Dado (12" strip at the base of the walls)
T = Trim (Doors, door casements, window frames, window casements, etc.)

PART IV: PROCESS CONTROL

CHAPTER XVII. INSTRUMENTATION

CONTENTS Page

A. INSTRUMENTS OF THE PUREX PLANT 1702

B. FLOW INSTRUMENTS 1704

C. PRESSURE, LEVEL, DENSITY, AND INTERFACE INSTRUMENTS 1710

D. THERMOMETERS 1715

E. RADIATION INSTRUMENTS 1716

F. IN-LINE MONITORS 1718

G. pH METERS 1720

H. MICROPHONES, TACHOMETERS, AND WOBBLE METERS 1721

I. SPECIAL INSTRUMENT SYSTEMS 1721

1. Dissolver and Off-Gas Systems 1721
2. Uranium and Waste Concentrators 1723
3. Plutonium Concentrators and Stripper 1724
4. Waste Rework Tank 1725
5. Acid Fractionator 1725
6. In-Line Blending System 1725

J. TRANSMITTING ELEMENTS 1726

K. RECEIVING AND CONTROLLING ELEMENTS 1734

L. CONTROLLED ELEMENTS 1740

1. Diaphragm-Operated Valves 1740
2. Solenoid Valves 1743

M. ALARMS 1743

REFERENCES 1744

LIST OF TABLES AND FIGURES 1745

CHAPTER XVII. INSTRUMENTATION

Remote control of much of the Purex process, with massive radiation shielding interposed between personnel and radioactive processing areas, necessitates the use of extensive process-control instrumentation. Approximately 600 process-control instruments are employed in the Purex Plant. These instruments comprise a total of about 5000 separate sensing, transmitting, indicating, recording, controlling, and other component elements. The purpose of this chapter is to describe the nature, applications, and limitations of the various types of instruments. The principles on which the instruments function are briefly explained. The several component elements of the various instruments and their interconnections are functionally described. Instrument ranges, accuracies, and sensitivities are indicated.

A. INSTRUMENTS OF THE PUREX PLANT

Automatic instrumentation is used in the Purex Plant to measure and/or control the following process variables: (a) flow, (b) differential pressure, (c) liquid level or weight factor, (d) specific gravity, (e) temperature, (f) liquid-liquid interface position, (g) radiation level, (h) pressure, (i) pH, (j) sound, (k) centrifuge speed, and (l) centrifuge vibration. Approximately 600 individual instruments are available in the Purex Plant to accomplish these objectives.

Only infrequently can a single instrument element perform a measurement and/or control function. Generally several distinct component elements are integrated into an instrument system which carries out the intended function: an element which "senses" the variable in question; an element which transmits the signal from the sensing element and often amplifies or otherwise modifies it, as needed; an element which receives the signal and indicates or records it; controlling and controlled elements, in the case of automatic controllers; and alarms, when needed to call immediate attention to some potential unusual situation.

Most of the instruments of the Purex Plant are listed in Tables XVII-2 to XVII-9 according to the equipment piece which they serve. For each instrument the tables show the equipment piece number of the equipment served by the instrument, the service of the equipment piece, the variable sensed, the type of sensing element used, the variable controlled (if any), the instrument signal flow which shows the relationship of the elements comprising the instrument system, and the range and any special features of the instrument.

The following instruments are not listed in tables: microphones (every vessel that has a rotating piece of equipment has a microphone), ammeters and motor switches for pump and agitator motors, sump instruments, pulse-generator indicators and alarm lights, jet-control stations, cell pressure and temperature, fire detection, and health monitoring chambers.

The instrument legend which explains the various instrument symbols used throughout this chapter and on the Instrument Engineering Flow Diagrams[8] is given in Table XVII-1.

The Purex-Plant instruments are mounted on graphic panels (9) which depict the flow of the process streams. These graphic panels, by indicating clearly at which point in the process the variables are measured and/or controlled, are intended to help avoid confusion which might otherwise result from the large number of instruments involved. The scope of the instrumentation is such that standard-size instruments would require excessive panel-board area. Therefore, all graphic-panel-mounted instrumentation consists of the miniature type.

The three control rooms in the Purex Plant are designated as: (a) Central, (b) Head-End, and (c) Power. The Central and Head-End Control Rooms each have a main and an auxiliary graphic panel. Figure XVII-1 shows a schematic drawing representative of a graphic panel.

The main graphic panel in the Central Control Room contains the instrumentation for the co-decontamination, partition, and final plutonium and uranium decontamination cycles and the waste treatment, acid recovery, and first solvent treatment systems.

The auxiliary panel in the Central Control Room contains the instrumentation for the second solvent system, the process vent system, "cold" aqueous tanks, and sumps.

The main panel in the Head-End Control Room contains the instrumentation for the irradiated-uranium feed preparation system.

The auxiliary panel in the Head-End Control Room contains the instrumentation for the Waste Rework Tank, recovered nitric acid storage tanks, laboratory cavern waste storage, Cell Collection Tank, and ionization-chamber radiation recorders.

The Power Panel Board contains the instrumentation required for proper ventilation of the Canyon, Operating Gallery, Laboratory, shops, and offices.

The process streams are represented on the graphic panels by the following colors:

Plutonium streams	Gold
Uranium streams	Yellow
Uranium-and-plutonium streams	Orange
Organic streams not bearing U or Pu	Blue
Aqueous waste	Red
"Cold" aqueous streams	Green
Instrument air	Silver
Steam, water, and air service lines	Black
Off-gas	Dark red

B. FLOW INSTRUMENTS

1. General

The following types of flow metering and/or control systems are used in the Purex Plant: (a) electronic rotameter, (b) pneumatic rotameter, (c) orifice meter, (d) head-above-orifice flow meter ("flow pot"), (e) metering pump, and (f) displacement meter. The choice of system depends upon the accuracy of measurement desired, the flow rates and the range of flow rates likely to be encountered, or other particular requirements of the stream involved.

In order to maintain the flow rates of the streams entering and/or leaving the solvent-extraction columns in the ratio specified by the flowsheet, a master control system is used. In such a system a flow recorder-controller (master) operating one stream resets the flow recorder-controller (slave) operating on other streams according to a predetermined ratio. The five master flow recorder-controllers in the Purex Plant operate on the HAF, IAF, IBXF, 2DF, and 2AF streams. The streams which each of the master recorder-controllers reset are as follows: (a) the HAF flow resets the HAX, HAW, HCX-H_2O, and HCX-HNO_3 flows to the HA and HC Columns; (b) the IAF flow resets the rates of $NaNO_2$ and HNO_3 addition to the IAF Tank, the IAW flow, and IAX flow; (c) the IBXF flow resets the IBS, IBXP, ICX-H_2O, and ICX-HNO_3 flows; (d) the 2DF flow resets the HNO_3 and chemical addition to the 2DF Tank, the 2DX, 2DW, 2EX-H_2O, and 2EX-HNO_3 flows; and (e) the 2AF flow resets the HNO_3 and $NaNO_2$ addition to the 2AF Tank, the 2AX (normal or make-up), 2AS, and 2BP flows.

2. Electronic Rotameter (FT)(10)

Application: A specially designed, Fischer and Porter, all stainless-steel electronic rotameter is used to measure the flow of most radioactive streams within the Purex-Plant Canyon and Sample Gallery.

Principle: Rotameters utilize constant differential head across a variable-area annular restriction to measure the flow rate of a fluid. The general flow equation is $Q = CA\sqrt{H}$ in which Q = flow rate, C = orifice coefficient, A = area (variable), and H = head difference across the annular restriction (constant).

The stream being measured passes upward through a vertical, truncated conical metering tube having the maximum diameter at the top. A float inside the tube adjusts its vertical position as required by the flow rate and in so doing changes the annular area between the tube and the maximum diameter of the float.

Electronic rotameters have an armature consisting of a vertical stainless-steel tube, the lower half of which is filled with a soft-iron core attached to the bottom of the float. As the flow rate increases both the float and the armature rise.

A transmitter, consisting of two inductance coils around a stainless-steel flow pipe, is attached to the bottom of the metering tube. Movement of the soft-iron core of the armature changes the inductances of the two coils which form an impedance bridge with an electric-to-pneumatic converter.

Description of sensing element: As shown in Figure XVII-2 the metering tube and stainless-steel coil housing are joined together by flanges and sealed with a teflon "O" ring. The fluid passes through and around the transmitting coil and converges to pass through the metering tube, which is approximately 50 mm. in active length. It has an enlarged section immediately above the active length to prevent obstruction of flow when the float is against the top stop and also to allow purging of foreign matter to prevent the float from sticking. The lower float stop is at a point approximately 10% up the metering tube, to allow back-flushing of the tube. All parts in contact with process solution are Type 347 and 304L stainless steel.

Connections: A schematic drawing of a flow-metering system utilizing an electronic rotameter is shown in Figure XVII-3. The rotameter transmits an electrical signal proportional to the flow rate to an electric-to-pneumatic coverter that is located in the Central Control Room. The converter changes the electrical output of the rotameter to a proportional air signal which is transmitted to a miniature recorder-controller located on the graphic panel in the Control Room. The recorder-controller sends an air signal to a diaphragm-operated control valve usually installed in the same process line as the rotameter; and the air signal positions the valve plug to produce the desired flow rate.

The rotameter systems that meter extraction-column feeds from tanks in the Canyon have solenoid valves, located in the air signal line to the control valve, that close the valve whenever the feed-pump motor circuit is de-energized. In this manner the column contents are prevented from draining back to the feed tank.

The flow of the master-control stream is measured by an electronic rotameter system. The air signal which goes to the master controller from the electric-to-pneumatic converter also goes to the set-point adjusting units mounted below each slave recorder-controller of the other streams in the master-control system. The ASP unit is adjusted so that each slave recorder-controller will control its stream flow in a definite ratio (0.3:1 to 3.0:1) to the master-controller stream flow.

Range: Each rotameter has a maximum-to-minimum flow range of 10:1. Minimum flow rates of 0.034 to 7.2 gal./min. are available.

Accuracy: Approximately 3 per cent of full-scale range.

Sensitivity: Approximately 2 per cent of full-scale range.

3. Pneumatic Rotameters (FT)[11]

Application: The pneumatic transmitting rotameter is used to measure the flow rate of "cold" process streams when the maximum flow rate is greater than approximately 0.2 gal./min. and the instrument can be located in the Operating Gallery.

Principle: The principle is the same as outlined for the electronic rotameter except for the method of transmission.

An armature, attached to the upper part of the float, consists of a stainless-steel tube containing two cylindrical permanent magnets in the upper portion placed so that the north-seeking poles are adjacent. An additional pair of magnets is mounted around the outside of the stainless-steel tube with their south-seeking poles adjacent to the north-seeking poles of the magnets inside the armature. Thus, as the armature moves, the external magnets follow, and through a mechanical linkage system operate a pneumatic transmitter to give an air signal proportional to float position.

Description of sensing element: The rotameter contains a glass metering tube which is fluted to guide a float designed to minimize the effects of variation in viscosity. The fluid enters horizontally at the bottom and leaves horizontally at the top. The stainless-steel extension housing for the float armature is mounted on top of the rotameter. The magnetically coupled pneumatic flow transmitter is mounted around the extension housing.

Connections: A schematic drawing of the pneumatic-rotameter metering system is shown in Figure XVII-3. The rotameter transmits an air signal to a miniature recorder-controller located on the graphic panel. The controller and control valve are the same as those described for electronic rotameter systems.

Range: The pneumatic rotameter has a maximum-to-minimum flow range of 10:1. Minimum flow rates from 0.036 to 6.0 gal./min. are used.

Accuracy: Approximately 3% of full-scale range.

Sensitivity: Approximately 2% of full-scale range.

4. Orifice Meters (FE)[12-20]

Application: The orifice-meter system, used chiefly for steam and water flow measurements, is also used to measure the flow of several "hot" off-gas streams.

Principle: Orifice meters operate on the principle of a constant-area flow restriction with variable head (pressure) loss. The relationship of flow rate and head loss is expressed in general form by the equation $Q = CA\sqrt{H}$ where Q = flow rate, C = orifice coefficient, A = area (constant), and H = head difference across the restriction (variable). The difference in hydrostatic head created by the orifice is impressed across a differential-pressure transmitter.

Description of sensing element: The sensing element consists of a thin-plate (1/8-in.-thick), sharp-edge orifice. The pressure taps on each side of the plate are located within the flanges that retain the orifice plate.

Connections: A schematic drawing of the orifice metering system is shown in Figure XVII-4. A Foxboro or a Republic differential-pressure transmitter is connected to the orifice pressure taps, which converts the differential pressure across the orifice plate due to fluid flow to an air signal which is proportional to the fluid flow. The air signal is transmitted to either a pressure gage, a miniature indicator-controller, a miniature indicator-integrator, or a miniature recorder-controller located on the graphic panel. The indicators and/or recorders have scales or charts calibrated in square-root numbers, so that they express percentage of maximum flow. (Example: A chart reading of 10 equals 100% of maximum flow, and a chart reading of 7 equals 70% of maximum flow.) If the flow rate is controlled, a diaphragm-operated valve is installed in the same line as the orifice-plate assembly, and the position of the valve stem is regulated by a signal from the controller to obtain the desired flow rate.

Range: The orifice-meter system has a useful minimum-to-maximum flow range of 3 to 1. The measurement of flow rates beyond the range of a particular installation can be accomplished by either changing the size of the orifice or by changing the range of the differential-pressure transmitter.

Accuracy: Approximately 3% of full-scale range.

Sensitivity: Approximately 2% of full-scale range.

5. Head-Above-Orifice Flow Meter (Flow Pot)

Application: A specially designed "flow-pot" flow meter, which gives wide-range flow measurement at a moderate cost of component parts, is used to measure the leakage flow through and around the piston of the column pulse generators and also the feed rate to the Feed Centrifuges. In the pulse-generator applications, the flow pots were selected due to low available head and a wide required range of the flow measurement. They were selected for the centrifuge feed streams because they are suitable for approximate flow measurement of a jetted stream.

Principle: The principle of operation of the flow pot is the same as that of the orifice-meter system, except for the manner in which the pressure drop across the orifice is measured. This flow meter consists essentially of a chamber receiving an entering liquid, which can leave only through an orifice at the bottom of the chamber wall. The level of the liquid builds up in the chamber until the hydrostatic head above the exit orifice is high enough to cause an exit flow equal to the entering flow. This steady-state liquid level is a measure of the flow rate. In the Purex-Plant flow pots, two orifices, one above the other, are actually used, to

make the instrument suitable for measurement of the required wide range of flow rates. At low flow rates liquid flows only through the lower orifice, while at high rates the upper orifice is also submerged, so that the liquid level is determined by the sum of the flows through the two orifices. This meter is not an instantaneous flow-measuring device but a flow-averaging device and requires several minutes to register the average after a flow change.

Description of sensing element: The flow pot consists of a plate 10-in. high installed vertically in the middle of an 11-in. section of 8-in. Schedule 40 pipe, the center of which is 8 in. from the bottom of the 11-in. pipe section. Liquid leaves through a 2-in. Schedule 40 pipe at the bottom of the 11-in. pipe section and on the opposite side of the vertical plate from the inlet. Two orifices, one above the other, having centers 3/4 in. and 4-3/4 in. from the bottom of the vertical plate, respectively, are drilled in the vertical plate. There is a one-inch clearance between the top of the vertical plate and the top of the 8-in. pipe section to allow liquid flow if the orifices plug or the flow is too great for the orifices to handle. A 1/2-in. Schedule 40 pipe dip tube enters the top of the 8-in. pipe section and goes to a point 1/2 in. from the bottom and another 1/2-in. pipe dip tube just enters the top of the 8-in. pipe section.

Connections: A schematic drawing of the flow-pot instrument system is shown in Figure XVII-4. The dip tubes are air purged and the back pressure is measured by a pressure transmitter located in the Operating Gallery for the system used on the feed to the centrifuges. The pulse-leakage flow is indicated by a manometer mounted in the Operating Gallery. An air signal from the transmitter goes to a miniature recorder located on the graphic panel.

Range: Approximately 0.1 to 6.0 gal./min.

Accuracy: Approximately 5% of full-scale range.

Sensitivity: Approximately 4% of full-scale range.

6. Metering Pumps[21]

Applications: Milton Roy metering pumps are used on "cold" process streams where the maximum flow rate is less than 0.2 gal./min. and the flow is continuous.

Principle: Metering pumps utilize a reciprocating piston having adjustable stroke and/or frequency to provide positive displacement of the liquid.

Description of sensing element: A Thymotrol unit (General Electric Co.) supplies D.C. current to the D.C. motor that reciprocates the pump piston. The speed of the motor, which is controlled by a 10,000-ohm potentiometer in the Thymotrol, controls the rate of reciprocation of the piston and thereby controls the flow rate. The potentiometer setting is controlled by a Conoflow pneumatic positioner. Check valves on the inlet and outlet side of the chamber, acted upon by the piston, prevent liquid from flowing in the wrong direction and permit positive displacement of the liquid.

Connections: A schematic drawing of a metering-pump instrument system is shown in Figure XVII-5. An air signal from an ASP unit (described in Subsection K9) controls the setting of the pneumatic positioner on the Thymotrol unit, thus regulating the flow rate. The signal from the ASP unit is also recorded on a miniature recorder on the graphic panel.

Range: The range of the metering pump is 0.01 to 0.15 gal./min.

Accuracy: Approximately 3% of full-scale range.

Sensitivity: Approximately 2% full-scale range.

7. Displacement Meter (DM)[22]

Application: Displacement meters are used to measure the volume of "cold" process streams for batch transfer of solution in those cases where it is desirable to know the exact volume transferred.

Principle: The displacement meter contains a nutating piston which is actuated by the passage of a fixed volume of liquid. The nutation of the piston, through a gear train, actuates a counter and registers total flow.

Description of sensing element: All parts in contact with the metered stream are fabricated of Type 304L or 347 stainless steel except the nutating piston which is hard carbon. The counter registers in tenths of gallons and automatically resets to zero after full register of six digits.

Connections: A schematic drawing of the displacement-meter system is shown in Figure XVII-5. Some of the meters have an impulse switch that closes once every gallon and remains closed for approximately 0.1 second. This switch operates an electrically actuated integrator located on the graphic panel. An auxiliary electrical contact on the counter is actuated upon reaching a preset number of gallons delivered and de-energizes a solenoid valve that vents the air signal line to an air-to-open diaphragm-operated valve. Since the valve is located in the same line as the displacement meter, the flow through the meter is stopped.

The system is placed in operation by manually rotating the digital counter on the graphic panel to the desired volume. A push button actuates the circuit and the meter will deliver the preset volume and then automatically shut off. The flow rate can be regulated by a manual controller that operates a diaphragm-operated valve. If the valve is shut off and then is re-opened, the flow will continue until the preset volume is delivered. The circuit can only be de-activated, once the push button is pressed, by manually rotating the digital counter toward zero until the electrical contacts are de-energized.

Range: There are three sizes of displacement meters: 0 to 37.5 gal./min., 0 to 50 gal./min., and 0 to 62.5 gal./min.

Accuracy: Approximately 1% of full-scale range.

Sensitivity: Approximately 1% of full-scale range.

C. PRESSURE, LEVEL, DENSITY, AND INTERFACE INSTRUMENTS

1. Purge-Type Instruments[24]

Application: Purged dip-tube systems are used for the measurement of weight factor, specific gravity, interface position, and solvent-extraction-column differential pressure.

Principle: Purge-type pressure-measuring instruments utilize a flowing stream of air (nitrogen is the purge fluid for the weight-factor instruments on $Fe(NH_2SO_3)_2$ Make-Up Tank, TK-103, and $Fe(NH_2SO_3)_2$ Adjustment Tank, TK-101) to counterbalance the hydrostatic head of a liquid. A regulated stream of purging gas flows into the liquid through open-ended dip tubes, and the back pressure in the dip tubes is measured by a manometer and/or a differential-pressure transmitter.

The weight-factor reading is expressed in inches of water required to balance the hydrostatic pressure, and is proportional to specific gravity; i.e., liquid level equals weight factor divided by specific gravity.

Specific-gravity measurements are made across a fixed liquid height. Specific gravity equals inches of water differential pressure divided by the inches of vertical distance between dip tubes. There must be enough liquid to cover both dip tubes or the specific-gravity reading will only be a weight-factor reading.

Interface-position measurements are made across a fixed liquid height in the column. The hydrostatic pressure developed across this fixed height is equal to the sum of the pressures developed by the heights of aqueous and organic phases multiplied by their respective specific gravities. Thus the interface location can be determined if the specific gravity of each phase is known.

Differential-pressure measurements are similar to those of weight factor.

Description of sensing element: The weight-factor sensing element is composed of two 1/2-in. Schedule 40 stainless-steel-pipe dip tubes, one located at a point near the bottom of the vessel and the other in the vapor space of the vessel.

The specific-gravity sensing element is composed of two 1/2-in. Schedule 40 stainless-steel-pipe dip tubes. One is usually the high-pressure weight-factor dip tube, and the other is usually 10 in. higher in elevation. In special cases the dip tube spacing is 20 in. or 40 in.

The interface-position sensing element is composed of three 1/2-in. Schedule 40 pipe dip tubes. There is usually a 12-in. vertical distance between the first and second, and the second and third, and they are installed either in the top or bottom column disengaging sections depending on the desired interface position. In some cases the interface-position dip-tube spacing is 8 in. (2B Columns) or 10 in. (IBS Column).

The solvent-extraction-column differential-pressure-sensing element is composed of two 1/2-in. Schedule 40 pipes; one is mounted at a point near the bottom of the column and the other at or near the top of the column.

Connections: The back pressure in the dip tubes is measured by a manometer and/or a differential-pressure transmitter. The manometer is usually installed on a local panel in the Operating Gallery or directly on the vessel. The differential-pressure transmitter is located in the Operating Gallery and transmits an air signal, proportional to the pressure in the dip-tube lines to a receiver on the graphic panel.

The weight-factor transmitter sends an air signal to an indicator, a miniature indicator-controller, or a miniature recorder-controller. When used, the recorder-controller sends an air signal to a Pneumaticset unit (Subsection K4) located in a flow recorder-controller to reset the flow rate and maintain a given weight factor in a vessel. The indicator-controller sends an air signal to a diaphragm-operated valve, which regulates the flow rate to maintain a given weight factor in a vessel.

The specific-gravity transmitter sends an air signal to either an indicator, a miniature recorder, and/or a miniature recorder-controller. When used on concentrators the recorder-controller sends an air signal to a Pneumaticset unit in a steam flow recorder-controller which resets the flow rate to maintain a given specific gravity in the vessel.

As shown in Figure XVII-6, for interface position at the top of a column the interface-position transmitter sends an air signal to a miniature recorder and a miniature recorder-controller. The recorder-controller sends an air signal to either an ASP unit (Subsection K9) and then to a Pneumaticset unit in a scrub-stream flow recorder-controller or directly to a diaphragm-operated control valve located in the aqueous-effluent line or the scrub line. By regulating the scrub flow to the column or the aqueous flow out of the column, a given interface position is maintained.

Since the columns are pulsed, a pressure variation is developed in the dip-tube lines with changes in pulse frequency which effects a change in the interface-reading position even though there is no change in interface position. For top interface position this change is minimized by the addition of 50 feet of 3/16-in. O.D. copper tubing between the differential-pressure transmitter and its connection to the air-purge and dip-tube lines. On those columns where the interface is controlled in the bottom disengaging section, 75 feet of 3/16-in. O.D. copper tubing are required.

The interface-position measuring and control system for the HC, IC, and 2E Columns (shown in Figure XVII-7) consists of dip tubes located in the bottom disengaging section of the column. The dip tubes detect and record the interface position on a recorder-controller which sends an air signal to either or both of two diaphragm-operated valves located in two separate aqueous-effluent lines of the column. Each effluent line also has a jet to move the solution from the column to a concentrator. The steam pressure to each jet is manually regulated from 0 to 100 lb./sq.in. gage, but if either or both of the jet-control stations are in the "off" position a diaphragm-operated valve located in the air signal line from the recorder-controller to the aqueous-effluent valve shuts off the respective effluent valve. The steam pressure must be adjusted so that the jet will operate at a flow rate greater than flowsheet conditions in order that the control valves can be throttled to maintain a given interface position.

The column differential-pressure transmitter sends an air signal to a miniature recorder. Since the columns are pulsed, a pressure variation is developed in the dip-tube lines with changes in pulse frequency which affects the pressure reading. This change could be minimized to a certain extent by installing snubbers similar to those used in the interface-position measurement system.

Range: The differential-pressure transmitters have various ranges depending on service. They can be adjusted for a range from zero to any value between the following minimum-to-maximum full-scale values:

Weight-Factor Instruments:

Minimum Scale Value, In. of Water	Full-Scale Value, In. of Water	
	Minimum	Maximum
0	25	50
0	50	80
0	80	129
0	130	249
0	250	399

Specific-Gravity and Interface-Position Instruments:

Minimum Scale Value, In. of Water	Full-Scale Value, In. of Water	
	Minimum	Maximum
0	15	10
0	2	3.5
0	4	20
0	15	30
0	40	80

Column Differential-Pressure Instruments:

Minimum Scale Value, In. of Water	Full-Scale Value, In. of Water	
	Minimum	Maximum
0	1.5	10
0	2	3.5
0	4	20
0	25	50
0	50	80
0	400	599

Accuracy: Approximately 3% of full-scale value for weight-factor and specific-gravity systems. Since the interface-position and column differential-pressure systems are on pulse columns the accuracy of measurement is approximately 10% of full-scale value.

Sensitivity: Approximately 2% of full-scale value.

2. Liquid-Level Measurement by Conductivity (LE)[25, 26]

Conductivity probes (Photoswitch, Inc.) are used tc indicate when the liquid level rises to a fixed point in the sumps in the Product Removal Room. The probe consists of two electrodes, each 4 in. long. that actuate a relay, which in turn operates an alarm light, when solution touches the tips of the probes, thereby permitting electricity to flow between them.

3. Interface-Position Measurement by Capacitance

Application: A capacitance probe is used for measurement and control of the interface position in the 2A Column.

Principle: A capacitance probe is an electric capacitor consisting of two metal electrodes which are insulated from each other and separated by a gap. One of the electrodes is a cylinder, the other a rod at the cylinder axis. The liquid phases and the insulating material fill the gap between the electrodes. The capacitance of such a probe depends upon the dielectric constant of the material in the gap. There is a sufficient difference in the dielectric constants of the 2A Column organic and aqueous phases to permit detection of changes in relative heights of the two phases in a probe.

Description of sensing element: As shown below, one pole of the capacitance probe consists of a stainless-steel rod approximately 3/8 in. in diameter.

SCHEMATIC VIEW OF CAPACITANCE PROBE

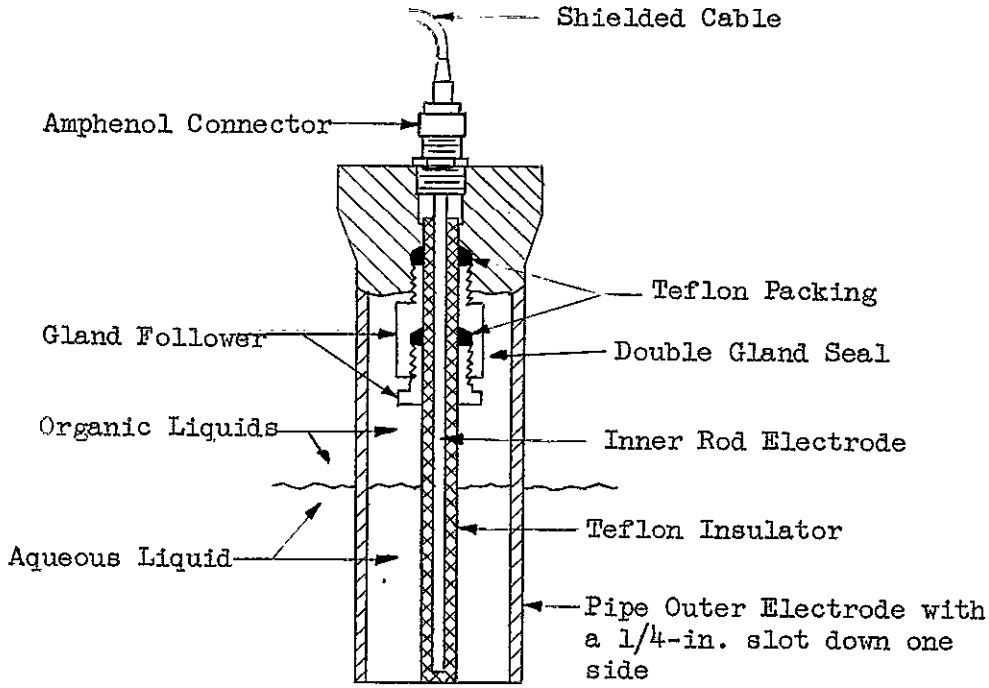

The other pole of the probe is a 1-in. Schedule 40 stainless-steel pipe, which surrounds the rod. The cylinder has a 1/4-in.-wide slot cut down one side, to permit circulation of liquids. Since the acidic solutions involved are good conductors, the two sides of the capacitor must be insulated from each other. A teflon tube (3/64-in. wall thickness) fitted over the rod serves as the insulation. The teflon tube is sealed at one end and is closed at the other by a packing gland.

Two capacitance probes are installed in a side chamber which is in parallel with the bottom disengaging box of the 2A Column. The installation of the probes and the instrument system used with the probes is shown schematically in Figure XVII-6.

Connections: The probes are connected by special low-capacitance cable to a Fielden "Telstor" capacitance bridge (Subsection J3) mounted in the Operating Gallery. The "Telstor" unit converts capacitance of the probe to a 0-50 mv. signal which goes to an electric-to-pneumatic converter mounted in the Control Room. The converter changes the electrical signal to an air signal which is transmitted to a miniature recorder-controller. The controller sends an air signal to a diaphragm-operated valve in the 2AW line which positions the valve plug to regulate the 2AW flow from the column so that a given interface position is maintained.

Range: The probe has an effective length of 10 inches.

Accuracy: Approximately 3% of full-scale range.

Sensitivity: Approximately 2% of full-scale range.

4. Bourdon Gages (PI)[27]

Application: Bourdon gages are used for local measurement of the pressure of fluids in vessels or lines.

Principle: The Bourdon-tube sensing element is a curved (essentially circular) tube of flat, elliptical cross section, sealed at one end. Pressure applied to the open end tends to straighten the tube; conversely, vacuum causes the tube to curl up. The movement of the closed, free end of the Bourdon tube is a function of the applied pressure.

Description of sensing element: The Bourdon tube is fabricated of bronze or 300-series stainless-steel, depending on the service. The scale faces are 3-1/2 in. and 4-1/2 in. in diameter.

Combinations: The gage is connected directly to the process line or vessel.

Range: Bourdon gages are used for measuring pressure, and a combination of vacuum and pressure.

Accuracy: Approximately 1% of full-scale range.

Sensitivity: Approximately 1/2% of full-scale range.

D. THERMOMETERS (TE)

1. Resistance Thermometers[28, 29]

Application: Resistance elements are used for all temperature measurements in "hot" zones and in those "cold" applications where a record is needed.

Principle: Resistance elements make use of the variation in electrical resistance of a coil of nickel or platinum wire due to temperature changes.

Description of sensing element: The nickel or platinum wire comprising the resistance element is wound on an insulator and incased by a thin protective stainless-steel tube. The sensing element is approximately 6 in. long and 11/32 in. in diameter. This is installed in a stainless-steel well fabricated of 1/2-in. Schedule 40 pipe mounted in a jumper assembly. The resistance value of the element is 504.9 ohms at 30°F. for those in the range of 0 to 150°C. and 45.5 ohms at 0°C. for those that measure up to 300°C. Vessels TK-A2, TK-B2, TK-C2, and TK-F2 use the higher-temperature bulbs.

Connections: The resistance element is connected electrically to an electric-to-pneumatic converter to form a Wheatstone bridge. The converter sends an air signal, proportional to the temperature, to a miniature recorder or a recorder-controller. In some cases the recorder-controller sends an air signal to a Pneumaticset unit in a steam-flow recorder-controller or directly to a diaphragm-operated valve in a cooling water line.

Range: Nickel resistance elements: 0 to 60, 100, 120, or 150°C., as tabulated (Tables XVII-2 to 9). Platinum resistance elements: 0 to 300°C.

Accuracy: Approximately 3% of full-scale range.

Sensitivity: Approximately 2% of full-scale range.

2. Mercury Thermometers[30-32]

Application: Mercury thermometers with dial indicators are used for temperature measurements on "cold" process streams and vessels where no record is required.

Principle: Mercury-filled capillary-tubing thermometers function on the basis of the difference in the coefficient of expansion of mercury and the coefficient of expansion of the confining system. The greater expansion of mercury upon heating is measured by a Bourdon gage.

Description of sensing element: The sensing element is a Type 304 stainless-steel well filled with mercury.

Connections: The sensing well is connected by a 1/4-in.-diameter, flexible armor-covered stainless-steel capillary to a Bourdon-tube pressure gage calibrated for temperature readings. This gage has a 4-1/2 in. diameter scale. All linkages are of stainless steel. The case is compensated for ambient temperature variations.

Range: 0 to 110°C. or 0 to 150°C., as indicated on Tables XVII-2 to 9.

Accuracy: Approximately 3% of full-scale range.

Sensitivity: Approximately 2% of full-scale range.

E. RADIATION INSTRUMENTS

1. Ionization Chambers (RE)[33, 34]

Application: Radiation instruments using ionization chambers serve for supplementary, approximate measurements of decontamination of the plutonium and/or uranium-containing streams and provide an indication of the intensity of gamma radiation near selected equipment pieces. Ionization chambers are employed on the Dissolvers, Feed Centrifuges and their feed tank, uranium concentrators, acid concentrators, Waste Neutralizer, Plutonium Product Receiver, Plutonium Sampler Tanks, and the Utility Decanter (F14).

Principle: Gamma radiation from sources "seen" by the instrument enters a gas-filled chamber, causing ionization. The ionization increases the electrical conductivity of the gas. The conductivity, which is measured, is an indication of the radiation intensity.

Description of sensing element: The Process Monitoring ionization chamber is a 5-in.-diameter plastic cylinder, 18-3/4 in. long. Beta rays do not penetrate the plastic and no "windows" for beta-ray entry are provided, so that only gamma radiation is sensed. The chamber is filled with argon. An Aquadag (graphite suspension) or boron carbide coating on the inside of the cylindrical wall is the negative electrode. The positive one is an axial 1/2-in. aluminum rod.

Connections: The ion chamber is connected by shielded cable to a four-point electrical selector switch which allows four ion chambers to be monitored by one recorder. The output of the switch goes to an amplifier, which in turn transmits a 0 to 50 mv. signal to a standard recorder.

Range: The instrument can detect from 0.003 mr./hr. to 300 r./hr.

Accuracy: The accuracy of the instruments in the system is approximately 8% of full-scale range. The accuracy of the radiation-level measurement, however, is dependent upon the accuracy of calibration.

Sensitivity: The sensitivity of the instruments in the system is approximately 5% of full-scale.

2. Scintillation Counters (SCE)

Application: Scintillation counters are used as in-line monitoring instruments for gamma activity. They are used to monitor the condensate streams from the uranium concentrators and Nitric Acid Fractionator, solution flowing to the 2EU Receiver Tank, and the 2BP flow to the Plutonium Stripper.

Principle: The gamma rays from the sample interact with a sodium iodide crystal to produce light scintillations. These in turn initiate electrical pulses from a photoelectric tube. The pulses are amplified to give a reading that is proportional to the activity of the solution being measured. The monitoring system measures the counting rate per unit volume of solution.

Description of sensing element: The sensing element is a sodium iodide crystal.

Connections: The gamma monitoring system (as shown in Figure XVII-8) consists of (a) a detector assembly, (b) a counting rate meter (for low-activity streams) or a current amplifier (for high-activity streams) depending upon whether it is a pulse or current-type scintillation counter, (c) an electric-to-pneumatic converter, and (d) a miniature recorder.

To permit checking of instrument background and sensitivity as well as to obtain sample readings, the sensing unit of the pulse-type counter which is used on TK-K5 is mounted on a 3-position motor-driven slide which is controlled from the graphic panel. Thus the sensing unit may be allowed to view (a) the sample cell, (b) a lead "background slug", or (c) a standard cesium-137 sample embedded in a duplicate lead slug. The current-type counters are checked by manually pushing a slide that has the three positions.

Range: The ranges of the scintillation counters to be installed in the Purex Plant have not been firmly established. It is expected, however, that the current-type instruments will have a range of from 5 microcuries/liter to 30 millicuries/liter. The range of the pulse-type unit (2EU stream) is expected to be 0.01 microcuries/liter to 0.2 microcuries/liter. The minimum values can be changed by modifications of the sample-cell geometry. The maximum values can be changed by modifications of either the sample-cell geometry or of measuring-circuit design.

Accuracy: Approximately 5% of full-scale value for the current type and 2% for the pulse type.

Sensitivity: Approximately 5% of full-scale value for the current type and 2% for the pulse type.

F. IN-LINE MONITORS

1. Uranium Polarograph

Application: The Uranium Polarograph will not be initially installed in the Purex Plant, but provisions have been made on the sampler assemblies in the Sample Gallery for future installation. The unit will be used to monitor the uranium concentration in the HAW, IAW, and other selected streams.

Principle: The amount of uranium in the process stream is determined by measuring the current produced during the electrochemical reduction of hexavalent uranium.

Description of sensing element: The sensing unit consists of a dropping-mercury electrode, a reference electrode (saturated calomel), a salt bridge, a vacuum reservoir, an electrolysis cell which is connected to the bayonet sampler, and a mercury trap, as sketched schematically below.

DROPPING-MERCURY ELECTRODE SYSTEM

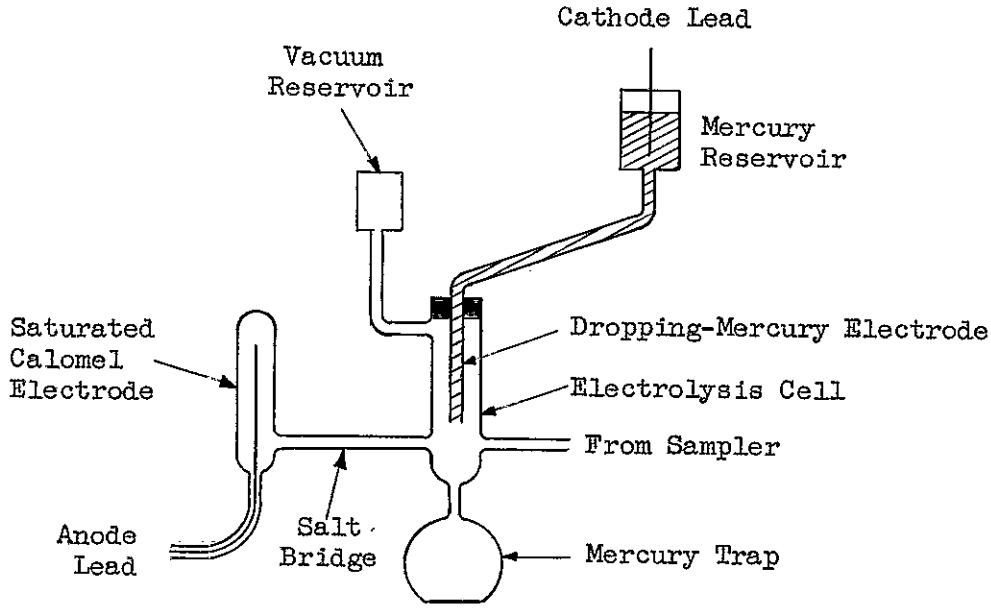

Connections: The system consists of a sensing unit, polarograph, and a controller. The polarograph contains an electrical circuit which permits the current measurements to be made and recorded. It also contains the necessary circuits for setting voltages, sensitivities, and control switches. The controller unit consists of a bridge circuit (a rotating potentiometer) and a set of cams which operates: (a) a solenoid valve to control the air supply to the jet on the sampler, (b) the dropping-mercury electrode circuit 5 seconds after the jet is shut off, (c) the chart drive of the recorder 10 seconds after the jet is shut off, (d) the bridge circuit 15 seconds after the jet is shut off. It also shuts off the dropping-mercury electrode after the bridge potentiometer has made a full rotation and then starts the jet again.

2. Other In-Line Monitors

The gamma scintillation counter is described in Subsection E2.

Other instruments currently being developed are a photometer for monitoring uranium feed-stream composition, an alpha monitor, an instrument metering the turbidity of column effluent streams, and a gamma spectrophotometer for determining the elements present in a process stream by the use of the gamma scintillation counter. It is expected that as these units are proved satisfactory they will be installed in the Purex Plant.

G. pH METERS (pHE)

Application: The pH of the solution in the Waste Neutralizer, IOF, IOW, 20F, and 20W Tanks is measured by a system of three electrodes located in a sampler mounted in the Sample Gallery.

Principle: The pH, i.e., the concentration of hydrogen ion of a solution, is determined electrometrically by measuring the difference in potential between an electrode which has a fixed voltage (calomel electrode) and an electrode in which the voltage varies with the solution pH (glass electrode).

When a thin glass membrane of special glass separates two solutions of different hydrogen-ion concentration, a potential is created that is a function of the two concentrations. Since the pH of the solution in the electrode is maintained constant, the pH of the external solution can be determined by comparing the potential produced with the known potential of a reference electrode (calomel electrode).

Description of sensing element: The glass electrode consists of a glass tube approximately 1/2 in. in diameter with a bulbous glass tip. A solution of constant pH is contained inside the tip, and the outside of the thin glass membrane is exposed to the solution whose pH is being measured.

The calomel electrode contained in a glass tube consists of mercury and mercurous chloride in contact with saturated potassium chloride as an electrolyte. The reference electrode makes contact with the process solution by allowing the saturated potassium chloride to flow slowly through a porous fiber sealed in the immersion end of the electrode.

A resistance element which automatically corrects the transmitter for the effect of temperature on the pH response of the electrodes is also immersed in the solution. On some installations where the temperature of the solution being measured is relatively constant this element may be eliminated.

Connections: The three elements are connected by shielded cable to a connector box and then to a Beckman amplifier. A connector box is used so that standard lengths of electrode leads can be furnished and permit replacement of electrode assembly with minimum replacement of special electrical leads. The amplifier sends a 0 to 50 mv. signal to an electric-to-pneumatic converter which changes the electrical signal to an air signal. This air signal is sent to a miniature recorder located on the graphic panel.

Range: 6 to 13 pH units.

Accuracy: Approximately 5% of full-scale range.

Sensitivity: Approximately 2% of full-scale range.

H. MICROPHONES, TACHOMETERS, AND WOBBLE METERS

1. Microphones (MK)(35)

A contact microphone with a response of approximately 400 to 7000 cycles per second is installed in a jumper, usually along with the temperature element, on every vessel that contains a rotating equipment piece. Sound originating in the cell actuates the microphone and the signal is transmitted through a 4-point selector switch through an amplifier and a volume unit to a speaker mounted on the panel board. From the quality of the sound, operating personnel may detect irregular mechanical operation as well as monitor normal operation.

2. Tachometers

General Electric Co. tachometers are used to provide a record of the speed of rotation of the centrifuges.

The unit is an A.C., 3-phase, 6-pole generator. Its output is rectified and the power produced is a measure of the speed of centrifuge rotation. After rectification the generator output goes to both a triple-range tachometer indicator with full-scale ranges of 0 to 20, 0 to 200, and 0 to 2000 rev./min. and to an electric-to-pneumatic converter, which transmits an air signal to a miniature recorder.

The tachometer is capable of measuring speeds between 10 and 1500 rev./min.

3. Wobble Meter

Wobble meters, developed at H.A.P.O., are used to record the amount of eccentricity in the centrifuge shafts.

Total shaft wobble is indicated on an amplifier located in the Operating Gallery. The amplifier transmits a 0 to 50-mv. D.C. signal to an electric-to-pneumatic converter, and the converter sends an air signal to a miniature recorder.

The wobble indicator detects shaft wobble between 0 and 1 inch (0 to 0.5-inch shaft eccentricity).

I. SPECIAL INSTRUMENT SYSTEMS

1. Dissolver and Off-Gas Systems

A schematic drawing of the Dissolver off-gas system instrumentation is shown in Figure XVII-9.

Safety devices are installed on the Dissolver to prevent a pressure build-up in case of a rapid evolution of gases in the dissolution step. The pressure in the Dissolver is normally maintained at approximately 10 in. of water vacuum. When the pressure increases to 7 in. of water

vacuum, a pressure-actuated switch energizes a relay which in turn energizes the motor drive of the jet-control stations and turns the manual pneumatic selector for the 10-in. jet to the "on" position and the manual pneumatic selector for the 6-in. jet to the "off" position. Two solenoid valves, which are also energized, transfer the controller air signal to the air-operated valves permitting the larger jet to attempt to bring the Dissolver pressure back to 10 in. of water vacuum. If the pressure in the Dissolver increases to 4 in. of water vacuum, a second pressure-actuated switch closes the air-operated valve which controls air in-leakage to the Dissolver. When the Dissolver pressure returns to 10 in. of water vacuum, the first pressure switch de-energizes the relay and all control functions are switched from the 10-in.-jet system to the 6-in.-jet system for normal operation.

Details of the system operation are as follows.

A pressure transmitter (PT-3) attached to the low-pressure weight-factor dip tube sends an air signal to a pressure recorder-controller (PRC) and the pressure switch (PAS-3). The pressure recorder-controller (PRC) sends an air signal (a) through a solenoid valve (VE-2) to a control valve (DOV-9) located in the off-gas line and (b) through a reversing relay (VP) and solenoid valve (VE-3) to a control valve (DOV-10) located in parallel with valve DOV-9. Pressure gages (PI-1 and PI-2) are in the air signal lines to valves DOV-9 and DOV-10, respectively. These gages can be calibrated in relation to valve-stem position thereby giving an approximation of the rate of off-gas flow.

When actuated by high pressure, PAS-3 energizes a relay (RL) which simultaneously operates four devices: (a) VE-2, (b) VE-3, and (c) jet-control stations JC-1 and JC-2. Solenoid valve VE-2 is a three-port valve: one port goes to valve DOV-9; one port connects to a 15 lb./sq.in. gage air supply; and the third port connects to the signal line from the recorder-controller. Thus, when VE-2 is energized it blocks off the air signal from the recorder-controller to valve DOV-9 and applies a 15 lb./sq. in. gage air pressure to DOV-9, closing it. A reversing relay (VP) changes the 3 to 15 lb./sq.in. gage air signal from the recorder-controller to a 15 to 3 lb./sq.in. gage signal which goes to valve DOV-10.

Solenoid valve VE-3 is a three-port valve: one port goes to valve DOV-10; one port is vented to atmosphere; and the third port is tied to the signal line from the recorder-controller. Thus, when VE-3 is energized it closes the vent and applies the air signal from the PRC to the valve DOV-10.

The jet-control station JC-1 operates the 6-in. jet (J-1) which pulls off-gas through valve DOV-9, and JC-2 operates the 10-in. jet (J-2) which pulls off-gas through valve DOV-10.

JC-1 and JC-2 are two manual pneumatic selectors, electrically interlocked for automatic switching by a reversing-type motor, which is activated by an electric relay (RL). When one selector is in the "off" position, the other is in the "on" position. An automatic-manual switch allows manual control of each pneumatic selector independently of each other. Manual controller VC-1 operates, through JC-1 and a solenoid valve (VE-1), either a steam valve (DOV-1) or an air valve (DOV-2) which in turn operates jet J-1. A pressure switch (PAS-2) in the steam line to valve DOV-1 operates VE-1; thus when the steam pressure drops below 85 lb./sq.in. gage, the air signal from VC-1 is switched from valve DOV-1 to valve DOV-2 allowing air pressure to operate jet J-1.

A selector switch located on the graphic panel allows the 6-in. jet to be operated by steam or air, although normal operation is with steam. Manual controller VC-2 through JC-2 operates the steam valve (DOV-5) which in turn operates the jet J-2.

A diaphragm-operated control valve (DOV-11), which is controlled by a manual controller (VC-3), bleeds cell air into the Dissolver. If high pressure occurs in the Dissolver, a pressure switch (PAS-1), attached to the low-pressure weight-factor dip tube, energizes a solenoid valve (VE-4) located in the air signal line to valve DOV-11. VE-4 is a three-port valve: one port goes to DOV-11; one port is vented to atmosphere; and the third goes to the manual controller (VC-3). When VE-4 is energized, the air signal from VC-3 is blocked off, the air pressure applied to valve DOV-11 is vented to atmosphere, and the valve closes. PAS-1 also operates a high-pressure alarm light (PAL).

2. Uranium and Waste Concentrators

The HCP, ICU, and 2EU Concentrators, and the No. 1 and No. 2 Acid Concentrators are equipped with safety devices which are designed to protect against high or low steam pressure, over-concentration as evidenced by low weight factor or high temperature, and overloading as evidenced by high weight factor. The instrument system operating the safety devices is shown schematically in Figure XVII-10.

Steam-pressure control: Each uranium and waste concentrator has two identical steam-flow systems to each chest. The operation of one system is as follows. A pressure switch (PIAS-1), attached to the steam line entering the chest, actuates relays RL-1 and RL-2. When the steam pressure rises to a specified value (Figure XVII-10), RL-2 is energized and operates a high-pressure alarm light (PAL-2) and de-energizes solenoid valve VE-1 which closes the steam valve DOV-1. When the steam pressure drops to a specified value (Figure XVII-10) RL-1 is energized and (a) operates a low-pressure-alarm light (PAL-1); (b) de-energizes solenoid valve VE-1, which closes the steam valve DOV-1; (c) de-energizes solenoid valve VE-2 opening valve DOV-2, thus pressurizing the steam line with air (as a precaution against back-up of radioactive solution to a "cold" zone in case of a leak); and (d) de-energizes solenoid valve VE-5 which closes the bypass around the steam trap. A push button has to be pressed to reset the PIAS-1 contacts in order to restart steam flow.

Liquid-level controls: Each concentrator is equipped with alarms which are activated by either low or high liquid level and provision is included for shutting off the steam at low liquid level to prevent overconcentration. The liquid-level alarm switches WFAS-1 and WFAS-2 are attached to the weight-factor and specific-gravity dip tubes. WFAS-1 is attached across the high and low-pressure weight-factor dip tubes, and WFAS-2 is attached across the low-pressure specific-gravity dip tube and the low-pressure weight-factor dip tube. When the weight factor drops to a specified value (Figure XVII-10), WFAS-1 operates a low-weight-factor alarm light (WFAL-2) and at a lower weight-factor value WFAS-2 (a) operates a low-weight-factor alarm light (WFAL-1); (b) energizes relay RL-3, which de-energizes solenoid valve VE-1 and closes the steam valve DOV-1; and (c) energizes relay RL-4 on the second steam-flow system which operates instruments similar to RL-3. When the weight factor rises above a predetermined value (Figure XVII-10) WFAS-1 activates a high-weight-factor alarm light (WFAL-3).

Temperature control: Two resistance elements (TE-1 and 2), located in the bottom effluent line, are connected through a selector switch (SS) to an electric-to-pneumatic converter. The converter sends an air signal to two temperature alarm switches (TAS-1 and 2), an indicator and recorder. When the temperature rises above a specified value (Figure XVII-10), alarm switch TAS-1 operates a high-temperature alarm light (TAL-1) and energizes relays RL-3 and RL-4 which shut off the steam flow to the chest. TAS-2 operates a high-temperature alarm light (TAL-2) and is set to operate at a slightly lower temperature than TAS-1 (Figure XVII-10) to attract attention before the steam flow to the chest is shut off. The alarm-switch signal-air-pressure range is 3 to 15 lb./sq.in.ga. The lowest pressure corresponds to the low end of the recorder temperature range; the highest, to the high end of the temperature range. The signal-air-pressure setting for any desired temperature for the alarm switches may be calculated in accordance with the following example, for TAS-1 on the HCP Concentrator:

Low end of range:	Signal air:	3 lb./sq.in.ga.
	Recorder temp.:	0°C.
High end of range:	Signal air:	15 lb./sq.in.ga.
	Recorder temp.:	150°C.

Desired alarm temperature setting: 129°C.

Therefore, required alarm signal-air pressure

$$= 3 + \frac{15 - 3}{150 - 0} \times 129 = 13.3 \text{ lb./sq.in.ga.}$$

3. Plutonium Concentrators and Stripper

The No. 1 and No. 2 Pu Concentrators and the Pu Stripper are equipped with safety devices which are activated by high and low steam pressure and low weight factor. The instrument system controlling these devices is shown in Figure XVII-11.

A pressure switch (PIAS) attached to the steam line entering the chest actuates relays RL-1 and RL-2. When the steam pressure rises to 29 lb./sq.in. gage, relay RL-2 is energized. The relay de-energizes solenoid valve VE-1 to close the steam valve DOV-1 and operates a high-pressure alarm light (PAL-2). When the steam pressure falls to 10 lb./sq.in.gage the PIAS energizes RL-1, which in turn (a) de-energizes solenoid valve VE-1 to close the steam valve DOV-1, (b) de-energizes solenoid valve VE-2 to open valve DOV-2 thus pressurizing the steam line with air, and (c) lights a low-pressure alarm light (PAL-1).

A weight-factor alarm switch (WFAS) at a specified value (Figure XVII-11) lights a low-weight-factor alarm light (WFAL) and de-energizes solenoid valve VE-1 to close the steam valve DOV-1.

4. Waste Rework Tank

The safety devices on the Waste Rework Tank are similar to those on the uranium and acid concentrators. This vessel, however, uses a coil for heating rather than a steam chest and has controls on steam, water, and air flow to the coil. Figure XVII-12 shows a schematic drawing of the instrument system operating the safety devices.

The pressure alarm switch (PIAS-1), the weight-factor alarm switches (WFAS-1 and 2), and the temperature alarm switches (TAS-1 and 2) operate the same as their counterparts described in Subsection I1 except that relays RL-1 and 2 operate alarm lights and, instead of operating solenoid valves directly, operate relay RL-3 which, through a valve selector switch (VS), (a) energizes solenoid valve VE-1 to close the steam valve DOV-1, (b) energizes solenoid valve VE-2 to close the water valve DOV-2, (c) energizes solenoid valve VE-3 to open the air valve DOV-3 to pressurize the coil line with air, and (d) energizes solenoid valve VE-4 to close the bypass around the pressure-reducing valve on the coil effluent.

5. Acid Fractionator

The acid fractionator is equipped with safety devices which are activated by low weight factor. The instrument system controlling these devices is shown in Figure XVII-1.

A pressure switch (PIAS) in the steam line energizes a relay. When the steam pressure drops to 15 lb./sq.in. gage, the relay (a) operates a low-pressure alarm light (PAL) (b) de-energizes solenoid valve VE-1 to close the steam valve DOV-1, (c) de-energizes solenoid valve VE-2 to open DOV-2 to pressurize the steam line to the fractionator with air, and (d) de-energizes solenoid valve VE-3 thus closing the steam-trap bypass.

6. In-Line Blending System

Heating and addition of nitric acid to the HCX, ICX, and 2EX streams is accomplished and controlled by the instrument systems shown schematically in Figure XVII-5.

The system consists of (a) a steam injector having a steam supply which is controlled by a self-acting temperature-regulating valve, (b) a pneumatic rotameter system which controls the demineralized water flow to the steam injector, and (c) a metering pump which controls the nitric acid flow that is added at a point downstream from the steam injector. The temperature bulb that actuates the temperature-regulating steam-addition valve is located downstream from the nitric addition line. Another bulb and capillary-tubing temperature-indicating system, which is located at approximately the same spot, actuates an alarm switch that operates high and low temperature lights located on the graphic panel.

The 2BX system is similar to that described above, except that the steam injector is replaced by a heat exchanger and a pneumatic rotameter, rather than a metering pump, controls the flow rate of the 2BX stream.

J. TRANSMITTING ELEMENTS

1. Function of Transmitting Elements

Transmitters are needed for signal amplification when the distance between the sensing element and its receiver is great and also when it is desirable to use another form of energy for transmission than that obtained from the sensing element.

Transmitters determine the magnitude of the variable sensed, convert it to the desired energy form for transmission such as electrical or pneumatic pressure, amplify it, and then send it to a receiver in the Control Room.

2. Pneumatic Transmitters

2.1 Republic transmitter (IT, SGT, FT)[36, 37]

Application: The Republic differential-pressure pneumatic transmitter is a component of the instrument systems used for measurement of interface position, specific gravity and on those orifice-meter systems that are reset by another controller, making it necessary to convert the square-root function of the orifice system to a linear function.

Principle: The Republic transmitter operates on the force balance principle. Its functioning may be explained by reference to the sketch below.

SCHEMATIC SKETCH OF REPUBLIC TRANSMITTER

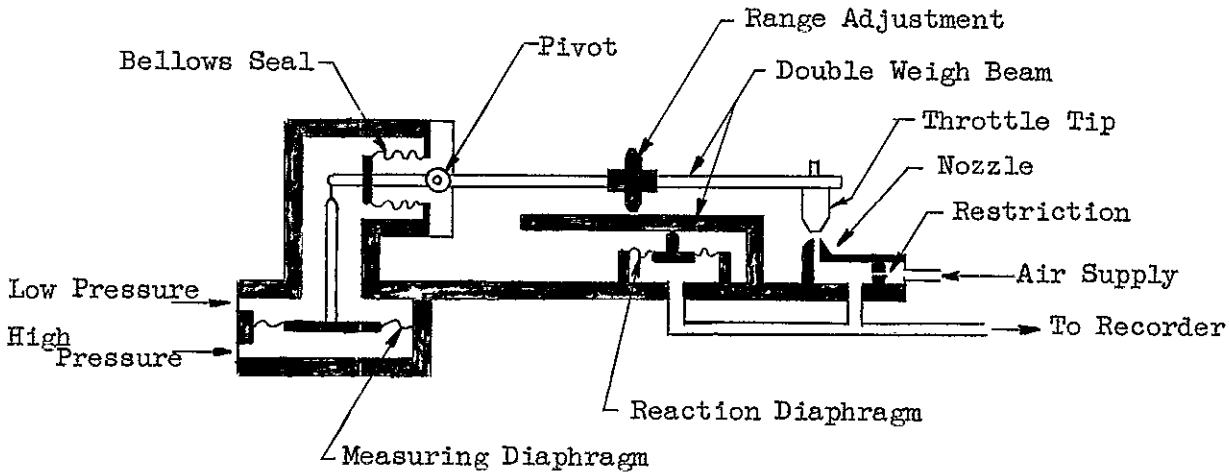

A pressure differential, developed across the measuring diaphragm, produces a force which acts against one end of a pivoted weigh beam. On the opposite end of the weigh beam there is a reaction diaphragm chamber which opposes the force. The position of a throttle tip (flapper plate) attached to the reaction-chamber end of the weigh beam determines the amount of air flowing from a bleed nozzle. The flow of air (20 lb./sq.in. gage) to the bleed nozzle is restricted by an orifice that is smaller in diameter than the bleed nozzle. The chamber between the bleed nozzle and the orifice restriction is connected to the reaction diaphragm and also to the pressure recorder on the graphic panel. As the throttle tip approaches the bleed nozzle a back pressure is built up in the reaction chamber and the pressure recorder to just oppose the force developed by the measuring diaphragm.

The square-root extracting transmitter is similar in operation to the one described above except that the reaction mechanism consists of a mercury-sealed bell on an auxiliary reaction diaphragm. The mercury-sealed bell is attached to the main reaction diaphragm and is vented to atmosphere. The lower end of the bell is submerged in mercury, which buoys up the bell, and produces an upward thrust which adds to that produced on the reaction diaphragm by the output pressure. As the output pressure increases, however, the mercury will be depressed around the outside of the bell and will rise inside, with a consequent decrease in buoyancy of the bell. As the bell loses buoyancy, its weight must be supported by the reaction diaphragm and, therefore, subtracts from the upward force produced by the reaction diaphragm. The bell is shaped so that the variation in buoyancy with changes in output pressure produces an output pressure proportional to the square root of the differential pressure on the measuring diaphragm.

Description: The body and all metal parts in contact with the process fluid are carbon steel. The measuring and reaction diaphragms are fabricated of Hycar, a synthetic rubber. The bellows seal on the measurement side of the weigh beam is stainless steel.

The total movement of the throttle tip is less than 0.002 in. The air supply from the transmitter to the recorder is 3 to 15 lb./sq.in. gage, proportional to the measured variable.

A suppressed range can be obtained by the addition of weights or spring adjustment on the measuring-diaphragm side of the weigh beam. Thus for interface-position or specific-gravity measurements the useful range of the instrument can be increased, and instead of a specific-gravity range of 0 to 2.0, the range could be suppressed to 1.0 to 2.0.

2.2 Foxboro D/P Cell (FT, WFT, DPT, PT)[38-41]

Application: The Foxboro differential-pressure pneumatic transmitter is used for the measurement of weight factor, differential pressure, gauge pressure, and for those flow measurements where it is not necessary to change the square-root function of an orifice system to a linear function.

Principle: The operating principle of the Foxboro D/P Cell is essentially the same as that of the Republic transmitter. A differential pressure across the measuring diaphragm produces a force which is transmitted through a force bar to a range rod. The range rod imposes on a flexure-pivoted intermediate lever a force exactly proportional to the differential pressure on the measuring diaphragm. The intermediate lever moves a flapper plate toward or away from a bleed nozzle and changes the pressure in the feed-back bellows, which is attached to the intermediate lever. Such changes balance the force imposed by the range rod on the intermediate lever to maintain the lever in a fixed position. The pressure in the bellows is always exactly proportional to the force applied to the range rod, which in turn is exactly proportional to the differential pressure on the measuring diaphragm. The pressure in the bellows is that supplied to an indicator or recorder on the graphic panel.

Description: A simplified sketch of the D/P Cell is shown below. The body and all parts in contact with the process fluid are carbon steel or stainless steel depending on service. The diaphragm is fabricated of Type 316 stainless steel in all cases. The flexure tube supports the force bar and the range rod and, through a lapped surface, serves as a process line seal. There are two vent valves, one on each side of the measuring diaphragm at the top of each chamber, for venting the chambers of gases. Zero suppression can only be obtained by external devices.

SCHEMATIC SKETCH OF FOXBORO D/P CELL

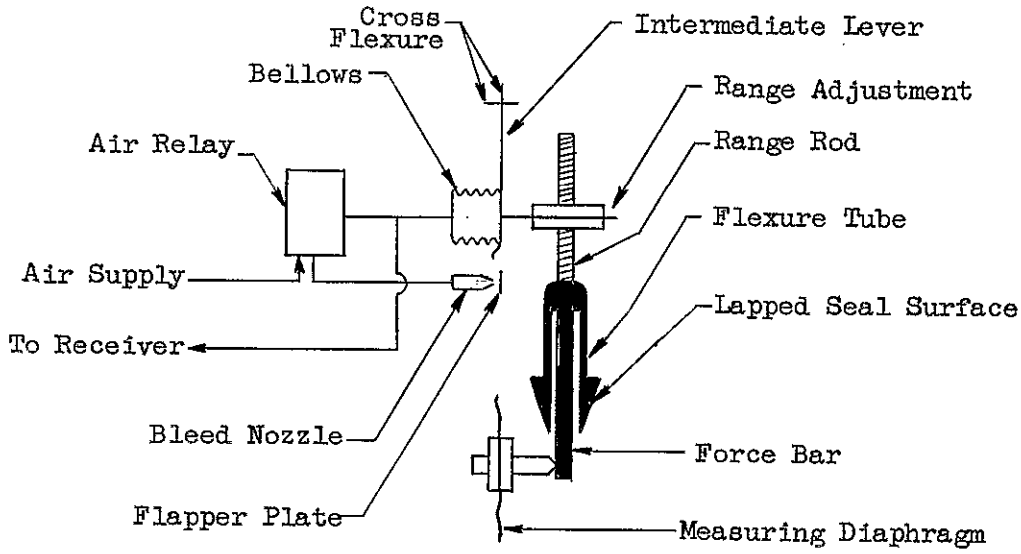

2.3 Minneapolis Honeywell transmitter (PT)[42]

Application: A Minneapolis Honeywell (formerly known as Brown) non-indicating pneumatic-pressure transmitter is used to measure the discharge pressure of certain "cold" pumps and the "hot" pumps in the organic treatment cycle where the radioactivity will be low.

Principle: The pressure is measured by a Bourdon-tube gage (Subsection C4) and is converted by a pneumatic transmitter to a 3 to 15 lb./sq.in. gage air signal.

Description: The transmitter consists of a flat spiral Bourdon-tube gage, which through mechanical linkages is attached to the flapper assembly of the pneumatic transmitter. A non-bleed type pilot relay amplifies the signal from the pneumatic transmitter and sends it to an indicator on the panel board.

2.4 Moore transmitters (PT)[43]

Application: A Moore pneumatic-pressure indicating transmitter is used to measure the pressure in the steam line to the coil of the Dissolver Off-Gas Heater. A Moore Nullmatic pressure regulator is used as a pressure transmitter for measuring the pressure in jet or coil lines.

Principle: The pneumatic pressure indicating transmitter measures the pressure with a Bourdon-tube gage (Subsection C4) and converts it with a pneumatic transmitter to a 3 to 15 lb./sq.in. gage air signal.

The Nullmatic pressure regulator is a pressure controller that utilizes a pneumatic "null" balance system in which the main valve is operated by a pilot nozzle and through diaphragm and spring adjustments forces are balanced. These regulators transmit a 1:1 signal as compared to the signal sensed.

Description: The pneumatic pressure-indicating transmitter consists of a Bourdon-tube gage which through mechanical linkages moves an indicator pointer and the flapper plate assembly of the pneumatic transmitter. The transmitter operates an air relay that transmits a 3 to 15 lb./sq.in. gage signal to an indicator on the panel board.

The pressure regulator is installed backwards to normal installation; that is, the 85 lb./sq.in. gage air supply is connected to the regulated-air output port, the coil or jet-line pressure tap is connected to the vent port, and the transmitting line to the pressure indicator on the panel board is connected to the air supply port. Since the accuracy of transmission is adequate for the service, a low-price pressure regulator can be used in this way in place of a high-price transmitter.

The transmitter has a normal range of 0 to 70 lb./sq.in. gage output for a 0 to 70 lb./sq.in. gage input signal. On some installations where vacuum and pressure are measured, a biasing mechanism (spring adjustment) adds 15 lb./sq.in. gage to the input signal such that the output is always 5 lb./sq.in. gage higher than the input. The signal output of the transmitter is 0 to 85 lb./sq.in. gage for a minus 15 lb./sq.in. gage to plus 70 lb./sq.in. gage input signal.

3. Electrical Transmitters

3.1 Capacitance bridge (Fielden)

Application: The capacitance bridge is used in conjunction with a capacitance probe for interface-position measurements in the 2A Column.

Principle: The capacitance bridge (Telstor) consists of an oscillator circuit operating at a frequency of approximately 500 kilocycles per second, modulated by the supply voltage. The circuit is as follows:

CAPACITANCE-BRIDGE CIRCUIT

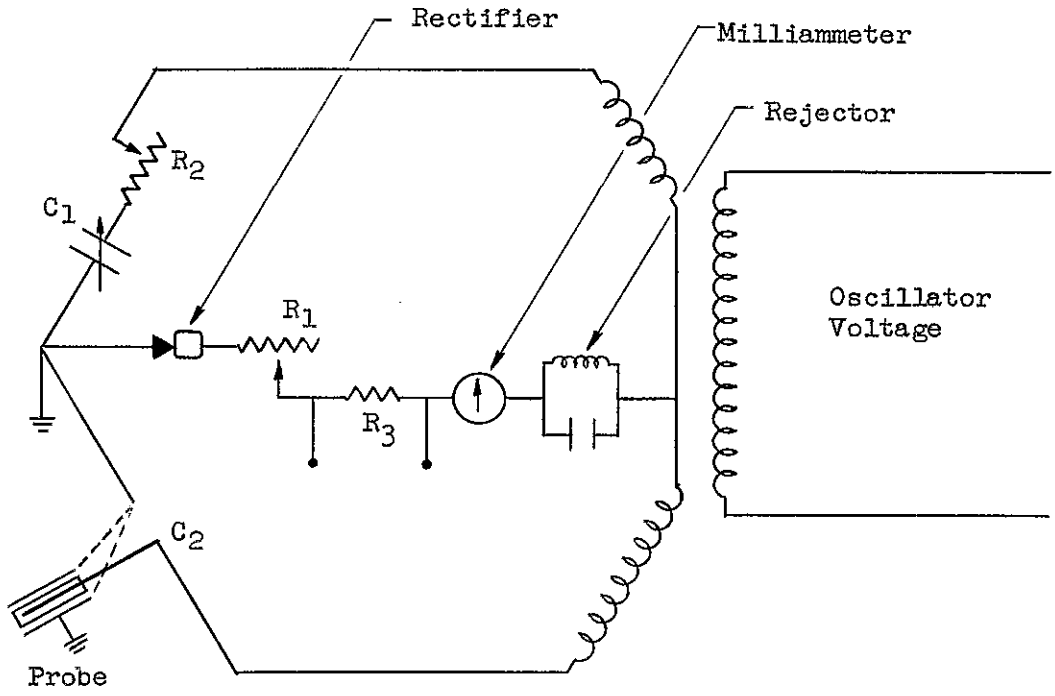

C_1 - Zero balancing capacitor (zero adjust #1)
C_2 - Probe and lead wire capacitance and resistance
R_1 - 5000-ohm range adjustment (calibration dial)
R_2 - Phase-adjusting resistance (zero adjust #2)
R_3 - 50-ohm resistor across which the 0 to 50 mv. signal is obtained for the electric-to-pneumatic converter.

As shown in the circuit diagram above, the radio-frequency voltage is applied to a modified Wein-type inductance-capacitance bridge. A rectifier circuit, range resistor, and milliammeter are used to determine if the bridge is balanced or unbalanced. The bridge is initially adjusted so that the milliammeter reads zero when the probe is covered with air and full scale when covered with aqueous solution. As the interface position varies on the probe, capacitance of the probe changes and the bridge is unbalanced by an amount which is indicated on the milliammeter.

Description: A zero balancing capacitor, phase-adjusting resistance, and an inductance coil comprise one side of the bridge, and the capacitance and resistance of the probe and lead cable and an inductance coil comprise the other side of the bridge. The maximum capacitance of the probe and cable which can be expected to give good operation with the Telstor is approximately 800 micromicrofarads. A second requirement is that the probe must

show a capacitance change of at least 100 micromicrofarads on changing the medium from air to aqueous phase. In certain installations it may be necessary to put a 100 or 200-micromicrofarad capacitor in parallel with the zero adjust #1 (C_1) in order to balance the probe in air to a zero meter reading.

3.2 Radiation-level amplifier (Beckman, Model V) (RA)[44, 45]

Application: The Beckman, Model V amplifier is used in conjunction with an ion chamber to measure the radiation level of a vessel or surrounding area.

Principle: The minute current developed in the ion chamber is conducted through a very high input resistance, 3×10^7 to 10^{11} ohms depending on the current range. The voltage produced across this resistance changes a vibrating-reed capacity modulator, oscillating at 120 cycles per second, which converts the voltage to an alternating-current signal. The A.C. signal passes through a four-stage amplifier and is then converted back to direct current for measurement.

Description: The Beckman amplifier can be changed in thirteen steps from 3×10^{-13} to 3×10^{-7} amperes for full-scale deflection. A voltage drop of 0 to 50 millivolts direct current, caused by flow of the amplified current through a separate fixed resistor, is transmitted to a standard potentiometer recorder.

3.3 pH amplifier (Beckman, Model W) (pHA)[46]

Application: The Beckman pH amplifier is used in conjunction with pH electrodes in measuring the pH of process solutions.

Principle: The amplifier is a null-type instrument based on the potentiometer principle whereby the input voltage (developed by the electrode sensing elements) is balanced by an equal opposing voltage.

Description: In order to determine the pH from the difference in potential of two electrodes, the voltage must be measured without allowing any appreciable current to flow from the cell; otherwise the voltage will change due to polarization effects at the electrode. The maximum current drawn from the electrodes by the amplifier is one micromicroampere; hence, freedom from electrode polarization is assured. The amplifier sends a 0 to 50 millivolt direct-current signal to an electric-to-pneumatic converter.

3.4 Counting rate meter (SC)

Application: A counting rate meter is used with a scintillation counter element when installed as a pulse-type unit.

Principle: The pulses, from the pre-amplifier of the scintillation-counter element, are applied to a frequency-metering circuit which is calibrated to indicate the average pulse rate in counts per minute.

Description: The General Radio Company, Type 1500-B, counting rate meter has ranges of 200, 600, 2000, 6000, and 20,000 counts per minute. There is a 5-milliamp. panel jack into which a circuit is plugged that provides a 0 to 50-mv. signal. The signal goes to an electric-to-pneumatic converter.

4. Electric-to-Pneumatic Converters (CVT)[47]

Electric-to-pneumatic converters are used in the Purex Plant to convert an electrical signal to a proportional 3 to 15 lb./sq.in. gage air signal. The converters are located behind the panel boards in the Central and Head-End Control Rooms. The use of these converters allows the same type of pneumatic miniature indicator and/or recorder and/or controller to be used on the graphic panel for any process variable.

4.1 Rotameter converter (Fischer and Porter)

Application: The converter forms an impedance bridge with an electronic rotameter and changes the electrical signal to an air signal.

Principle: The rotameter transmitter consists of a pair of inductance coils in which a soft iron armature (stainless-steel clad) moves in response to flow rate. A similar pair of induction coils and soft iron armature (not stainless-steel clad) are located in the converter. These systems are connected to form two parallel circuits with a common center lead. The outer leads are connected via a step-down transformer to a source of alternating current, while the center lead connects to an amplifier which controls a reversible motor. When the transmitter and receiver armatures are in corresponding positions in the coils, the impedance in each of the two circuits is approximately equal and no current flows through the center lead. However, as soon as the transmitter armature moves due to flow-rate change, the impedance of the transmitter coils changes and causes a small current to flow in the center lead. The amplifier detects the magnitude and phase relationship of this current, amplifies it, and uses it to energize the reversing winding of the motor. The other winding (reference) of the motor is energized from a steady source of alternating current supplied through a capacitor to provide proper phase relationship. Through mechanical linkages the motor operates the receiver armature, moving it vertically in or out of the receiver coils to bring the impedance bridge back into balance.

Description: The converter is matched with a given rotameter transmitter or a select group and should only be used with those specified; otherwise the calibrations are meaningless. The pneumatic transmitter, which sends a 3 to 15 lb./sq.in. gage air signal proportional to the flow rate to a receiving element, is attached to the receiver armature linkages.

4.2 Temperature converter (Minneapolis Honeywell)

Application: The converter forms a Wheatstone bridge with a resistance-thermometer sensing element and changes the electrical signal to an air signal.

Principle: The amplifier conversion stage converts the unbalance direct-current bridge voltage (due to resistance changes of the temperature element) to a proportional alternating-current voltage. The voltage amplifier multiplies the A.C. voltage so that it can be used to control the power-amplifier output which delivers power to the balancing motor. Both the phase and the magnitude of this driving power are directly controlled by the amplifier A.C. voltage. The balancing motor recognizes the phase of the driving motor and balances the bridge accordingly by moving the slide-wire contactor.

Description: The converter consists of detecting, amplifying, and transmitting elements. The detecting and amplifying elements contain four units: (a) a conversion stage, (b) a voltage amplifier, (c) a power amplifier, and (d) a balancing motor. The balancing motor also operates a gear segment which is linked to a pneumatic transmitter. The transmitter sends an air signal to a receiver.

4.3 Scintillation, pH, and capacitance converters (Minneapolis Honeywell)

Application: The converter is a potentiometer and also changes the 0 to 50 millivolt signal from a scintillation-element amplifier, pH amplifier, of capacitance bridge to an air signal.

Principle: The potentiometer opposes an unknown voltage with a known voltage. The known voltage is varied by the movement of a contactor along a slidewire, across which a battery voltage is impressed. At balance, the two opposing voltages are equal, and no current flows in the balancing circuit. A detection and balancing system determines unbalanced condition and makes the necessary corrections to rebalance the system.

Description: The balancing system and pneumatic transmitting systems are the same as described under J4.2, above.

K. RECEIVING AND CONTROLLING ELEMENTS

1.1 Graphic panel indicators (DPI, FI, PI, TI, WFI)

Fischer & Porter, drum-type vertical gages (3 to 15 lb./sq.in. gage) are used on all weight-factor and differential-pressure instruments requiring indication on the graphic panel.

Moore, round-dial, Bourdon-tube-type gages (3 to 15 lb./sq.in. gage) are used on all pressure, temperature, and flow installations for indication of the variable on the graphic panel.

Standard Bourdon-tube pressure gages are used for graphic panel indication of service-line pressures such as steam, water, air, and instrument air.

1.2 Local indicators (WFI, PI)

Manometers are used for weight-factor indication where it is required near a vessel or on a local panel.

Standard Bourdon-tube pressure gages are used locally to measure steam, water, air, and pump discharge-line pressures.

2. Indicator-Controllers (WFIC, FIC, PIC)[57, 58]

Application: Foxboro Consotrol indicator-controllers are used to indicate and control weight-factor, flow, and pressure systems.

Principle: The variable is measured by a 3 to 15 lb./sq.in. gage bellows which through linkages operates a pneumatic control system that delivers an air signal to the controlled element to maintain the measured variable at a desired value.

Description: The instrument is composed of two parts: a lower unit which is equipped with an automatic-manual selector valve, a manual loader, and a pressure gage; and an upper unit which is equipped with an indicating pointer and a control set pointer on a vertical 0 to 100 division linear scale or a 0-10 division square-root scale. With the selector valve set in the manual position, the controlled element is pneumatically operated by adjustment of the manual loader and the pressure to the element is indicated on the pressure gage. With the selector valve in the automatic position, the control set pointer is adjusted to the desired reading and the controller automatically varies the air output to the control element to give the desired indicator reading. The pressure to the control element is indicated on the pressure gage. Additional information pertaining to such control functions as proportional band, reset, and derivative are included in Subsection K4.

3. Recorders

3.1 Graphic-panel recorder (FR, WFR, SGR, TR, DPR, RR, pHR, PR)[59]

Application: Foxboro Consotrol recorders are used where it is required to have a record of a variable on the graphic panel and the signal being received is 3 to 15 lb./sq.in. gage.

Principle: Each recording pen is operated through linkages by a 3 to 15 lb./sq.in. gage bellows receiver.

Description: The consotrol recorder has either one or two recording pens depending on the service. A 4-inch-wide strip chart with either 0 to 100 linear or 0 to 10 square root graduations is used.

3.2 Standard recorder (RR, CRR)[60, 61]

Application: Standard potentiometer-type recorders are used on radiation level and on counting rate meter installations.

Principle: A 0 to 50-millivolt direct-current signal is measured by a potentiometer system.

Description: The record has from one to 4 points recorded on one pen depending on service. A 12-inch-wide chart with 0 to 100 linear graduations is used. The balancing and detecting system is the same as described for the electric-to-pneumatic converter, under J4.3.

4. Recorder-Controllers (FRC, IRC, WFRC, SGRC, TRC, PRC)[62]

Application: All recorder-controllers are miniature Foxboro type and are mounted on the graphic panels in the central and head-end control rooms. They are used to record and control flow rate, interface position, weight factor, specific gravity, temperature, and pressure.

Principle: The variable is measured by a 3 to 15 lb./sq.in. gage, bellows receiver which operates through mechanical linkages a recording pen and a pneumatic control system that delivers an air signal to the controlled element (usually a valve) to maintain the measured variable at a desired value.

Description: Control functions have been added to the recorder described under 3.1. The control set pointer has a vernier drive and is located near the top of the recorder-controller case. When the controller is in the "automatic" position, this pointer is set at the desired recorder reading as read on the scale above the chart, and when the controller is in the "manual" position, the set pointer is set at the air loading pressure, as read on the uppermost scale, to be delivered to the controlled element. The scale above the control set pointer indicates the pressures being delivered to the controlled element when the controller is either on "manual" or "automatic".

The "automatic-manual" selector switch is a lever-operated 3-position slide valve with a positive stop in the "seal" position and is located near the bottom of the recorder-controller case. To switch from "automatic" to "manual" control, first move the selector switch to the "seal" position. This closes the seal valve and isolates the pressure in the controlled element. The control set pointer is then moved to coincide with the indicator for the pressure to the controlled element. This exactly matches the output pressure from the control-set-pointer unit with the pressure to the controlled element. The selector switch is then moved to the "manual" position and applies the desired output pressure directly to the controlled element, and the output pressure can now be changed by moving the control set pointer to any desired indicated-pressure reading. To transfer from "manual" to "automatic", move the selector switch to the "seal" position, thereby isolating the pressure to the controlled element and connecting the output from the "control-set-pointer unit" to the

"controller-set unit". The control set pointer is then moved to coincide with the measurement pen reading, which exactly matches the "set" pressure to the "measurement" pressure. The selector switch is then moved to the "automatic" position which opens the seal valve and connects the controller output to the controlled element.

The controller has the following devices for improving control:

The proportional-band adjustment is located at the middle and top of the control unit and is adjustable from 0 to 200%. The proportional-band setting determines the amount of pen movement, expressed as per cent of the full-chart scale, necessary for the control-air output to change from 3 to 15 lb./sq.in. gage. For example, for a proportional-band setting of 50% and a chart scale of 100 divisions, a control-air output of 3 to 15 lb./sq.in.ga. corresponds to a maximum pen movement of 50 chart divisions, with the position of this range on the chart determined by the position of the set pointer. In the absence of a reset adjustment the process variable can cause the pen to stabilize at any point within its range of movement, not necessarily at the position of the set pointer. The smaller the proportional band setting the smaller the zone in which the process variable can stabilize. On any particular application, however, the proportional band can be reduced only to a certain point, below which the controller will cycle.

The reset adjustment is located at the top right hand corner to the back face of the control unit and is adjustable between 0.2 and 100.0 repeats per minute for FRC, IRC, and PRC and between 0.02 and 20.0 repeats per minute for TRC, WFRC, and SGRC. The reset function can only be installed in a controller that has the proportional-band function. The reset function permits the valve position pen measurement relationships to change. This relationship changes whenever the measurement pen is not precisely at the control point. The change in valve position is in a direction to return the measurement pen to the control point and occurs at a predetermined rate. With a given setting, reset rate is proportional to the amount of deviation of the measurement pen from the control set point but continues only so long as any deviation exists. The primary function of reset is to eliminate measurement-pen deviation from the control set point due to load changes in the process system.

The derivative function is also added to some of the controllers and is located at the top left-hand corner to the back face of the control unit. Depending on the service it is adjustable 0.008 to 8.0 repeats per minute or 0.05 to 50.0 repeats per minute. The derivative function can only be installed where there is proportional-band function or proportional-band-plus-reset functions. Derivative action is proportional to the rate of change to the process variable and provides a greater or less signal to the control valve to bring the process under control faster whenever there is a load change. This function is usually used whenever there is a large dead time or transfer lag in a process system.

Also on some controllers (slave) that are reset by another controller (master) a Pneumaticset bellows is installed along with the other control functions. This bellows moves the set pointer (which is floating free instead of being attached to a vernier drive) of the recorder-controller in order to maintain a given value on the master controller.

5. Integrators

5.1 Pneumatic integrator (Fischer & Porter) (FIX)[63]

Application: Pneumatic-integrator indicators are used whenever a record on the total volume of steam or water flow is desired.

Principle: The surface of a cam represents the calibration of the primary instrument on polar coordinates and is rated to a given position for each pressure value of the receiving element. At intervals of 2.5 seconds a sweep arm moves from its zero position through an arc whose angle is limited by the striking of the sweep arm against the cam surface. The angular length of the sweep arm's return stroke determines the amount of the integrator count.

Description: The receiving element has a 3 to 15 lb./sq.in. gage bellows. The instrument gives an indication of the instantaneous value of the process variable on a vertical scale and gives total flow on a mechanical digital counter.

5.2 Electric integrator (Sperry) (FX)[64]

An electrically actuated integrator is used on the graphic panel to give total flow as measured through displacement meters. A solenoid armature strokes a mechanical digit counter once for each closing of the solenoid field contact which is actuated by a switch on the displacement meter for each gallon that goes through the meter.

6. Manual Controllers (Pamellit) (VC)[65]

Manual controllers are used to provide 3 to 15 lb./sq.in. gage air pressure to diaphragm-operated control valves. The controller is an adjustable pressure-regulating valve with a vertical dial to indicate the output pressure. The dial has two scales: 2 to 15 lb./sq.in. gage units on the left-hand side, and 0 to 100% (with 0% at the 3 lb./sq.in. gage value) on the right-hand side.

7. Self-Acting Regulating Valves (Fulton Sylphon) (TRV)[66, 67]

Application: Self-acting regulating valves are used to regulate temperature of certain lines or vessels in non-radioactive zones.

Principle: When the temperature at the sensing bulb rises, part of the liquid in the bulb vaporizes and builds up the pressure in the bellows on the valve. Increased pressure in the bellows moves the plug stem so that less steam flows to the process thus causing the temperature to fall.

Description: A temperature bulb, filled with vapor, is connected by capillary tubing to a bellows which is connected to the plug stem of the regulating valve. The temperature can be adjusted over an approximate 60°F. spread.

8. Metering Pumps and Displacement Meters

The metering pump is described in Subsection B6 and the displacement meter in B7.

9. Remote Set-Pointer Adjusting Unit (ASP)[68]

Application: The remote set-pointer adjusting unit (ASP) is usually used on those control systems where one controller resets the control set pointer of another controller.

Principle: The set-point adjusting unit is a pneumatic controller that is used to adjust the set pointer of a slave controller. It is identical to the slave controller (Subsection K4), except that the reset and Pneumatic-set bellows have been replaced with calibrated springs. The proportional-band adjustment on the front of the unit is calibrated in ratio settings.

The ASP unit receives a 3 to 15 lb./sq.in. gage air signal from a master controller, and transmits a 3 to 15 lb./sq.in. gage air signal to a Pneumaticset bellows in the slave controller. The Pneumaticset bellows changes the position of the set pointer and thereby changes the variable controlled by the slave controlled in such a manner that it is kept in a desired ratio to the variable controlled by the master controller.

Description: The output signal of the ASP unit goes through an automatic-manual switch that is located between the ASP unit and its recorder-controller. This switch allows the set pointer on the slave recorder-controller to be moved automatically by the master controller (Pneumaticset) or by a manual loader (manual set) which operates independently of the master controller.

In either case the slave recorder-controller would be on automatic control and will automatically adjust the air output to keep its recording pen in agreement with the control set pointer. The slave recorder-controller itself can also be put on automatic or manual control by adjusting an internal switching device (Subsection K4). If the recorder-controller is placed on manual, its air output is controlled by moving its set pointer pneumatically with the manual loader of the ASP switch unit.

On some installations, where only one slave controller is controlled by a master controller, the ASP unit is omitted but the switching unit with Pneumaticset and "manual set" is used.

L. CONTROLLED ELEMENTS

1. Diaphragm-Operated Valves

1.1 Canyon valves (Hammel-Dahl) (DOV)(69-82)

Application: Diaphragm-operated valves are used on all process streams to regulate remotely fluid flow between process equipment pieces. Some of the valves are throttling and others are on-off in operation.

Principle: The air pressure is varied in a chamber bounded by a flexible diaphragm. The valve stem, attached to the diaphragm, moves with it, under the pressure variations. The moving stem, in turn, moves the valve plug toward or away from its seat, decreasing or increasing the port area and, hence, the flow rate through the valve. High air pressure opens or closes the valve, depending on adjustment, as indicated below (under Description).

The flow formulas are:

Liquid: Flow rate, in gal./min. $= C_v\sqrt{\frac{\Delta P}{G}}$

Steam: Weight rate, in lb./hr. $= 63\ C_v\sqrt{\frac{\Delta P}{V}}$

Gas: $Q' = 1360\ C_v\sqrt{\frac{(\Delta P)P}{(460 + {}^{o}F)G}}$

where C_v is the flow coefficient of the valve and is defined as the flow in gal./min. of water produced by a one lb./sq.in. pressure drop across the valve at any valve plug lift. The valve flow coefficient with the plug at maximum lift (open) expresses the port area of the valve and is used to state the valve capacity.

ΔP is the pressure drop across valve in lb./sq.in.
G is specific gravity.
Q is cubic feet per hour at 60°F. and 14.7 lb./sq.in. absolute.
V is specific volume of inlet steam.
P is inlet pressure in lb./sq.in. absolute.

Description: A schematic drawing of an air-operated Hammel-Dahl valve is shown in Figure XVII-13. The body is designed to allow complete drainage when the plug is off the seat ring. The valve has a single-seat plug with provision for easy removal of both the plug and seat. A welded leaf-type stainless-steel bellows is attached to the plug stem and is so installed that the process solution comes in contact with only the outside of the bellows. There is an auxiliary teflon stem seal called a "Dahl seal" above the bellows seal. This seal requires a high surface finish and should only be installed by the factory. There is an opening to the atmosphere between the Dahl seal and the diaphragm chamber to allow the process solution to drain to the Canyon floor instead of coming up the air signal line to a "cold" zone if both seals should fail. The diaphragm chamber is so designed that the valve action can be changed from air-to-open to air-to-close by positioning the spring adjustment nuts and changing the air signal from one side of the diaphragm to the other.

An on-off valve has a quick opening plug and a throttling valve has a tapered plug, which can be either a linear or equal percentage-type plug. A linear (parabolic) plug produces a constant change in flow for a unit change in lift if the pressure drop across the valve remains constant. This type of plug is used in those cases where the pressure drop in the system is largely concentrated across the valve and in those cases where the maximum capacity of the valve will be required. The plug characteristics (% flow vs. % lift) at constant pressure drop across valve are shown below.

HAMMEL-DAHL VALVE

Flow Characteristic Curves

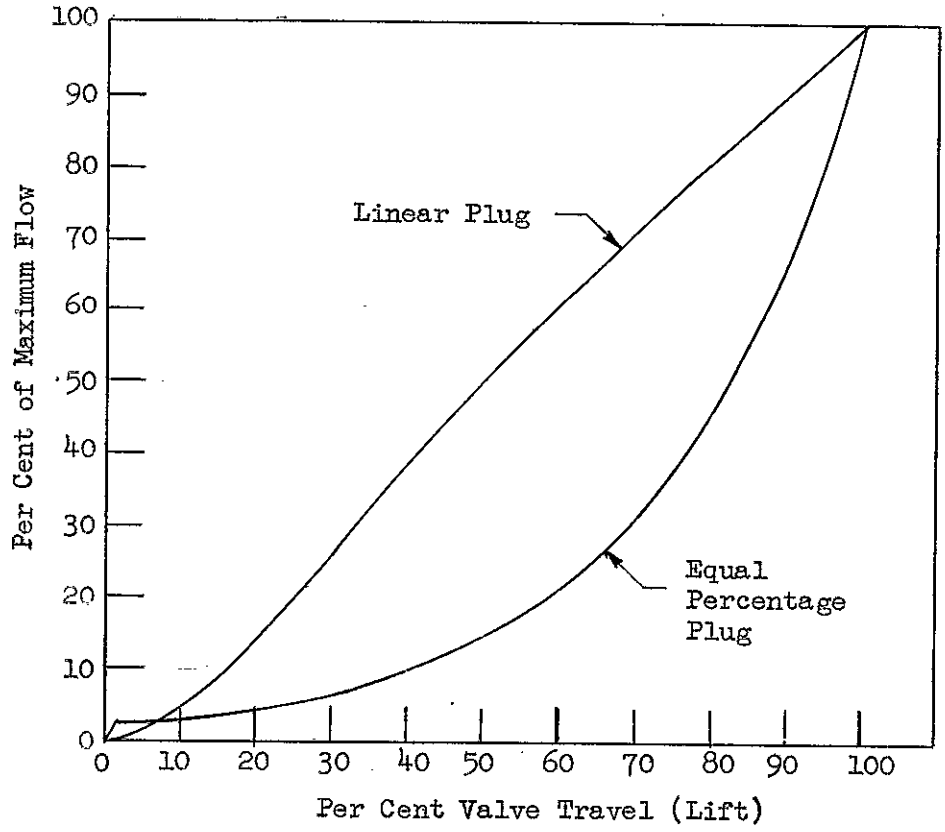

An equal-percentage (ratio, or logarithmic) plug produces an equal percentage change in flow for a unit change in lift (above 2%) if the pressure drop across the valve remains constant. At any position of the plug when the lift is changed 10%, the flow changes approximately 50% on opening and 33% on closing. This plug is used in those cases where only a small fraction of the pressure drop is dissipated by the valve. At low flow rates, however, it is possible for practically all of the pressure drop to be concentrated at the valve if necessary. The plug characteristics at constant pressure drop across the valve are shown above.

The following valve plug sizes, each available in both the linear and equal-percentage types, are used in the Purex Plant:

Nominal Valve Plug Size, Inches	C_v* for Fully Open Position
3/16	1.0
1/4	1.6
3/8	2.5
1/2	4.0
3/4	6.3
1	10
1-1/4	16
1-1/2	25
2	40
2-1/2	63
3	100
4	160
6	360

1.2 Sample Gallery valves (Hammel-Dahl) (DOV)

A specially designed Hammel-Dahl valve (Ultra Valve) is used for Sample Gallery installations and is similar to the valve described under 1.1, above, except for the following:

(a) The top works is designed only for air-to-open service.

(b) The over-all height of the valve is reduced by making only a short pipe connection between the diaphragm chamber and the valve body. This pipe connection has a leakage drain hole so that if the bellows seal and Dahl seal fail, the process solution will not be forced into the diaphragm chamber and then into the control room.

- -

*) C_v is flow in gal./min. of water at one lb./sq.in. pressure drop across valve. Flows at any given pressure drop may be calculated from these C_v values by use of the equations presented above (under Principle).

1.3 "Cold" Valves (DOV, Do Valve)

Diaphragm-operated valves supplied by Fischer Governor, Hammel-Dahl, Foxboro, and Kieley-Mueller are used to regulate the flow of non-radioactive process streams, steam, water, and air. They are globe-type, single-seated valves, designed for only one type of action: either air-to-open or air-to-close. The plug stem has a standard packing gland instead of a stainless-steel bellows seal.

2. Solenoid Valves (VE)[83]

Solenoid valves are installed in air-signal lines to certain diaphragm-operated control valves so that the valve can be opened or closed by an electrical signal from an alarm switch or relay. The alarm switch or relay is operated variously by pressure, temperature, weight factor, flow, liquid level, or power failure.

M. ALARMS[84]

Pressure-actuated electrical switches are attached to the signal lines from transmitters, directly to an air-purged dip-tube system, directly to process lines, or directly to an electrical circuit. The switches operate an electrical alarm unit and are actuated by weight factor, pressure, temperature, flow, liquid level, pulse generator, and fire detection elements.

The alarm unit consist of a flashing light and audible alarm, both of which are off under normal operating conditions and are activated by abnormal conditions. A reset button, when actuated, changes the flashing light to a steady light and shuts the audible alarm off. The steady light will stay on until the abnormal condition is corrected.

REFERENCES

(1) T. J. Rhodes, Industrial Instruments for Measurement and Control, McGraw-Hill Book Co., New York (1941).

(2) HWS-5631 Specification for 5-in. H.M. Ionization Chamber, B. E. Dozer, H.A.P.O. 10-30-53.

(3) HW-29348 A Continuous Gamma Activity Monitor. M. C. Leboeuf, U. L. Upson, and R. E. Connally. 10-1-53.

(4) HW-30148 An Automatic Polarograph for the Determination of Uranium in Process Waste Streams. K. Koyama, C. E. Michelson, and G. J. Alkire. 12-10-53.

(5) HW-33148 pH Monitoring of Metal Recovery Neutralized Waste. C. E. Michelson. 9-24-54.

(6) H-2-1853 Ionization Chamber (drawing)

(7) H-2-1854 Ionization Chamber (drawing)

(8) Instrument Engineering Flow Diagrams. See Table XI-1, Chapter XI.

(9) through (86) Detailed instrument information. See Table XVII-10.

LIST OF TABLES AND FIGURES

TABLE XVII-1 INSTRUMENT LEGEND

TABLE XVII-2 DISSOLUTION AND HEAD-END INSTRUMENTS

TABLE XVII-3 CO-DECONTAMINATION CYCLE INSTRUMENTS

TABLE XVII-4 PARTITION CYCLE INSTRUMENTS

TABLE XVII-5 FINAL URANIUM CYCLE INSTRUMENTS

TABLE XVII-6 FINAL PLUTONIUM CYCLE AND PLUTONIUM CONCENTRATION INSTRUMENTS

TABLE XVII-7 AQUEOUS MAKE-UP INSTRUMENTS

TABLE XVII-8 SOLVENT TREATMENT INSTRUMENTS

TABLE XVII-9 ACID RECOVERY AND WASTE DISPOSAL INSTRUMENTS

TABLE XVII-10 REFERENCES TO DETAILED INSTRUMENT INFORMATION

FIGURE XVII-1 GRAPHIC PANEL B-1

FIGURE XVII-2 ELECTRONIC ROTAMETER

FIGURE XVII-3 ROTAMETER SYSTEMS

FIGURE XVII-4 ORIFICE SYSTEMS

FIGURE XVII-5 FLOW METERING SYSTEMS -- Metering Pump and Displacement Meter

FIGURE XVII-6 COLUMN INTERFACE-MEASURING SYSTEM

FIGURE XVII-7 INTERFACE-CONTROL SYSTEM

FIGURE XVII-8 SCINTILLATION COUNTER

FIGURE XVII-9 DISSOLVER OFF-GAS SYSTEM

FIGURE XVII-10 CONCENTRATOR SAFETY DEVICES -- Uranium and Acid Concentrators

FIGURE XVII-11 CONCENTRATOR SAFETY DEVICES -- Plutonium Concentrators and Stripper, and Acid Fractionator

FIGURE XVII-12 WASTE REWORK TANK SAFETY DEVICES

FIGURE XVII-13 HAMMEL-DAHL CONTROL VALVE

FIGURE XVII-14 PROCESS VENT SYSTEM

FIGURE XVII-15 COIL CONTROLS

TABLE XVII-1

CO-DECONTAMINATION CYCLE

Equipment Served No.	Equipment Served Name	Inst. Symbol	Variable Sensed	Variable Controlled	Type of Sensing Element	Signal Flow	Range	Remarks
TK-H1	HAF Tank	TR	Temperature	—	Resistance element	TR-H1 → CVT-H1-1 → TR-H1	0 - 60°C.	
		WFR	Weight Factor	(Alarm, pump, and agitator motors)	Dip tubes	Dip tubes → WFT-H1 → WFR-H1; WFT-H1 → WFI-H1; → WFAS-H1-1 → WFAL-H1-1 (Hi) and WFAL-H1-2 (Lo); → WFAS-H1-2 → shuts off agitator and pump motors	0 - 156" 108" (Lo) and 138" (Hi) 7.5" (Pump) and 24" (agitator)	Head end graphic panel
		SGR	Specific Gravity	—	Dip tubes	Dip tubes → SGT-H1 → SGR-H1	1.0 - 2.0 Sp.Gr.	
		FRC	HAF Flow	HAF flow Resets HAX flow Resets HAW flow Resets HCX demineralized water flow Resets HCX HNO_3 flow	Electronic rotameter	FT-H1A → CVT-H1-2 → FRC-H1 → VE-H1 → DOV-H1-2A; → ASP-H2-1 → FRC-H2-1; → ASP-H2-3 → FRC-H2-3; → ASP-H3-1 → FRC-H3; → ASP-H3-2 → FR-H3	0.9 - 9.0 g.p.m.	1" DOV N.C. (1/2" plug)
		PI	Pressure in coil line	Water flow to coil	Pressure tap	Pressure tap → PT-H1 → PI-H1-1; VC-H1 → DOV-H1; → PI-H1-2	0 - 70 p.s.i.g. 0 - 160 p.s.i.g.	1 1/2" N.C. (1 1/4" plug) Operating gallery
T-H2	HA Column	FRC	HAX flow	HAX flow	Electronic rotameter	FT-H2-1 → CVT-H2-1 → FRC-H2-1 → DOV-H2-1	3.1 - 31.0 g.p.m.	1" DOV N.C. Reset by HAF flow.
		FI	Pulse leakage flow	—	Flow pot	FE-H2 → FI-H2-2	0.1 - 6.0 g.p.m.	Operating gallery
		IRC	Interface	Resets HAS HNO_3 flow Resets HAS demineralized water flow	Dip tubes	Dip tubes → IT-H2 → IRC-H2 → ASP-H2-2 → FRC-H2-2; → ASP-H2-4 → FRC-H2-4	0.833 - 1.25 sp.gr.	
		SGR	Organic overflow sp.gr.	—	Dip tubes	Dip tubes → SGT-H2 → SGR-H2	0.833 - 1.66 sp.gr.	
		DPR	Column differential pressure	—	Dip tubes	Dip tubes → DPT-H2 → DPR-H2	0 - 530"	
		FRC	HAW flow	HAW flow	Electronic rotameter	FT-H2-3A → CVT-H2-2 → FRC-H2-3 → DOV-H2-3A	1.5 - 15 g.p.m.	1" DOV N.C. Reset by HAF flow.
		FRC	HAS demineralized water flow	HAS demineralized water flow	Pneumatic rotameter	FT-H2-4 → FRC-H2-4 → DOV-H2-4	0.49 - 4.9 g.p.m.	1" DOV N.C. (3/16" plug). Reset by interface.
		FRC	HAS HNO_3 flow	HAS HNO_3 flow	Pneumatic rotameter	FT-H2-2 → FRC-H2-2 → DOV-H2-2	0.13 - 1.3 g.p.m.	1" DOV N.C. (1/4" plug). Reset by interface.
T-H3	HC Column	IRC	Interface	HCF flow	Dip tubes	See Figure XVII-7 for details of system.	0.833 - 1.25 sp.gr.	
		SGR	Aqueous effluent sp.gr.	—	Dip tubes	Dip tubes → SGT-H3 → SGR-H3	0.833 - 1.25 sp.gr.	
		DPR	Column differential pressure	—	Dip tubes	Dip tubes → DPT-H3 → DPR-H3	0 - 500"	
		FRC	HCX demineralized water flow	HCX demineralized water flow	Pneumatic rotameter	See Figure XVII-5 for details of system.	6 - 60 g.p.m.	1 1/2" DOV N.C. (1 1/4" plug). Reset by HAF flow.
		TRV	HCX temperature	HCX temperature	Vapor filled bulb system		Set at 50°C.	
		FR	HCX HNO_3 flow	HCX HNO_3 flow	Metering pump		0.01 - 0.15 g.p.m.	Reset by HAF flow.
		TIAS	HCX temperature	Alarm	Mercury filled bulb system		0 - 150°C.	
		FI	Pulse leakage flow	—	Flow pot	FE-H3 → FI-H3-2	0.1 - 6.0 g.p.m.	Operating Gallery
E-H4-1	HCP Concentrator system	WFR	Weight factor	Shuts off steam flow to chest	Dip tubes	See Figure XVII-10 for details of concentrator safety devices.		
		FRC	Steam flow to chest	Steam flow to chest	Orifice			
		TR	Temperature of concentrator effluent	Shuts off steam flow to chest	Resistance element			
		TR	Temperature of condenser cooling water outlet	—	Resistance element	TR-H4-2 → CVT-H4-2 → TR-H4-2	0 - 100°C.	
		SGRC	Specific gravity	Resets steam flow to chest	Dip tubes	Dip tubes → SGT-H4-1 → SGRC-H4 → Resets FRC-H4-1; → SGT-H4-2 → SGR-H4 → Resets FRC-H4-2	1.47 - 1.52 sp.gr. 1.0 - 1.625 sp.gr.	Diptube spacing 40". Resets steam to chest. Dip tube spacing 40".
		DPI	Differential pressure	—	Dip tubes	Dip tubes → DPT-H4 → DPI-H4	0 - 50"	
		FI	Water flow to condenser	Water flow to condenser	Orifice	FE-H4-2 → FT-H4-2 → FI-H4; VC-H4 → DOV-H4-2	0 - 530 g.p.m. (at 100")	4" DOV N.O.
		TR	Temperature of condensate	—	Resistance element	TE-H4-3 → CVT-H4-3 → TR-H4-3	0 - 120°C.	
		KR	Gamma of condensate to crib	—	Scintillation element	SCE-H4 → SC-H4 → CVT-H4-4 → KR-H4		
		KR	Radiation of pot	—	Ion chamber	RE-H4 → RS-H4 → RA-H4 → KR-H4		Central auxiliary panel
		VS	—	Water flow to seal pot		VS-H4 → Do valve		1" Do valve N.C. on-off
		WFI	Weight factor seal pot	—	Dip tubes	Dip tubes → WFT-H4-1 → WFI-H4	0 - 36"	

NOTE:

(a) All receiving instruments are on Central Graphic Panel except where otherwise noted.

HW-31000

TABLE XVII-4

PARTITION CYCLE INSTRUMENTS

Equipment Served No.	Equipment Served Name	Inst. Symbol	Variable Sensed	Variable Controlled	Type of Sensing Element	Signal Flow	Range	Remarks
TK-J1	IAF Tank	TR	Temperature	—	Resistance Element	TE-J1→GVT-J1-1→TR-J1	0 - 120°C.	
		WFRC	Weight factor	IAF flow (alarm and agitator and pump motors)	Dip tubes	Dip tubes→WFT-J1→WFRC-J1→Resets FRC-J1-1 →WFAS-J1-1→WFAL-J1-1 (Hi) and WFAL-J1-2 (Lo) →WFAS-J1-2→shuts off agitator and pump motors	0 - 267" 119" (Lo) and 149" (Hi) 7.5" (pump) and 26" (agitator)	
		SGR	Specific gravity	—	Dip tubes	Dip tubes→SGT-J1→SGR-J1	1.0 - 2.0 sp.gr.	
		FRC	IAF flow	IAF flow Resets $NaNO_2$ flow to IAF tank Resets HNO_3 flow to IAF tank Resets IAW flow Resets IAX flow	Electronic rotameter	FT-J1-1→GVT-J1-2→FRC-J1-1→VE-J1→DOV-J1-1 →ASP-J1-1→FR-J1 →ASP-J1-2→FRC-J1-2 →ASP-J2-3→FRC-J2-3 →ASP-J2-4→FRC-J2-4	0.9 - 9.0 g.p.m.	1" DOV N.C. (1/2" plug). Reset by weight factor.
		FRC	HNO_3 flow to tank	HNO_3 flow to tank	Electronic rotameter	FT-J1-2→GVT-J1-3→FRC-J1-2→DOV-J1-2	0.08 - 0.8 g.p.m.	1" DOV N.C. (3/16" plug). Reset by IAF flow.
		MP	$NaNO_2$ flow to tank	$NaNO_2$ flow to tank	Metering pump	MP-J1→FR-J1	0.01 - 0.15 g.p.m.	Reset by IAF flow.
		PI	Pressure in coil line	Water flow to coil	Pressure tap	Pressure tap→PT-J1→PI-J1-1; VC-J1→DOV-J1-3 →PI-J1-2	0 - 70 p.s.i.g. 0 - 160 p.s.i.g.	1 1/2" DOV N.C. (1 1/4" plug) Operating Gallery
T-J2	IA Column	IRC	Interface	Resets IAS HNO_3 flow Resets IAS demineralized water flow	Dip tubes	Dip tubes→IT-J2→IRC-J2→ASP-J2-1→FRC-J2-1 →ASP-J2-2→FRC-J2-2	0.833 - 1.25 sp.gr.	
		SGR	Organic overflow sp.gr.	—	Dip tubes	Dip tubes→SGT-J2→SGR-J2	0.833 - 1.25 sp.gr.	
		DPR	Column differential pressure	—	Dip tubes	Dip tubes→DPT-J2→DPR-J2	0 - 500"	
		FRC	IAS HNO_3 flow	IAS HNO_3 flow	Electronic rotameter	FT-J2-1→GVT-J2-1→FRC-J2-1→DOV-J2-1	0.13 - 1.3 g.p.m.	1" DOV N.C. (1/4" plug). Reset by interface.
		FRC	IAS demineralized water flow	IAS demineralized water flow	Pneumatic rotameter	FT-J2-2→FRC-J2-2→DOV-J2-2	0.49 - 4.9 g.p.m.	1" DOV N.C. (3/16" plug). Reset by interface.
		FRC	IAW flow	IAW flow	Electronic rotameter	FT-J2-3A→GVT-J2-2→FRC-J2-3→DOV-J2-3A	1.5 - 15.0 g.p.m.	1" DOV N.C. Reset by IAF flow.
		FRC	IAX flow	IAX flow	Electronic rotameter	FT-J2-4→GVT-J2-3→FRC-J2-4→DOV-J2-4	3.1 - 31.0 g.p.m.	1" DOV N.C. Reset by IAF flow.
		FI	Pulse leakage flow	—	Flow pot	FE-J2→FI-J2-2	0.1 - 6.0 g.p.m.	Operating Gallery
TK-J3	IB Pump Tank	TR	Temperature	—	Resistance element	TE-J3→GVT-J3-1→TR-J3	0 - 60°C.	
		WFRC	Weight factor	IBXP flow (alarm and agitator and pump motors	Dip tubes	Dip tubes→WFT-J3→WFRC-J3→Resets FRC-J3 →WFAS-J3-1→WFAL-J3-1 (Hi) and WFAL-J3-2 (Lo) →WFAS-J3-2→shuts off agitator and pump motors	63" (Lo) and 77" (Hi) 5" (pump) and 16" (agitator)	
		SGR	Specific gravity	—	Dip tubes	Dip tubes→SGT-J3→SGR-J3	0.5 - 1.0 sp.gr.	
		FRC	IBXP flow	IBXP flow Resets IBS flow Resets IBXP flow Resets ICX HNO_3 flow Resets ICX demineralized water flow Resets $NaNO_3$ flow ICU concentrator	Electronic rotameter	FT-J3→GVT-J3-2→FRC-J3→VE-J6→DOV-J6-3 →ASP-J4→FRC-J4 →ASP-J6→FRC-J6 →ASP-J7-1→FR-J7 →ASP-J7-2→FRC-J7 →ASP-J8→FR-J8	3.9 - 39 g.p.m.	1" DOV N.C. Reset by weight factor.
		PI	Pressure in coil line	Water flow to coil	Pressure tap	Pressure tap→PT-J3→PI-J3-1; VC-J3→DOV-J3 →PI-J3-2	0 - 70 p.s.i.g. 0 - 160 p.s.i.g.	1 1/2" DOV N.C. (1 1/4" plug) Operating Gallery
T-J4	IBS Column	FRC	IBS flow	IBS flow	Electronic rotameter	FT-J4-1→GVT-J4→FRC-J4→DOV-J4-1	0.55 - 5.5 g.p.m.	1" DOV N.C. (1/4" plug). Reset by IBXP flow.
		IRC	Interface	IBP flow	Dip tubes	Dip tubes→IT-J4→IRC-J4→DOV-J4-2	0.5 - 1.0 sp.gr.	1" DOV N.C. (1/4" plug).
		SGR	Organic overflow sp.gr.	—	Dip tubes	Dip tubes→SGT-J4→SGR-J4	0.5 - 1.0 sp.gr.	
		DPR	Column differential pressure	—	Dip tubes	Dip tubes→DPT-J4→DPR-J4	0 - 500"	
		FI	Pulse leakage flow	—	Flow pot	FE-J4→FI-J4-2	0.1 - 6.0 g.p.m.	Operating Gallery
T-J6	IBX Column	IRC	Interface	IBX flow	Dip tubes	Dip tubes→IT-J6→IRC-J6→DOV-J6-2	0.833 - 1.25 sp.gr.	1" DOV N.C. (3/8" plug)
		SGR	Organic overflow sp.gr.	—	Dip tubes	Dip tubes→SGT-J6→SGR-J6	0.833 - 1.25 sp.gr.	
		DPR	Column differential pressure	—	Dip tubes	Dip tubes→DPT-J6→DPR-J6	0 - 500"	
		FRC	IBXP flow	IBXP flow	Electronic rotameter	FT-J6-2→GVT-J6→FRC-J6→DOV-J6-1	0.29 - 2.9 g.p.m.	1" DOV N.C. (3/8" plug). Reset by IBXP flow.
		FR	IBX flow	—	Pneumatic rotameter	FT-J6-1→FR-J6	0.29 - 2.9 g.p.m.	Flow controlled by IRC-J6
		FI	Pulse leakage flow	—	Flow pot	FE-J6→FI-J6-2	0.1 - 6.0 g.p.m.	Operating Gallery
T-J7	IC Column	IRC	Interface	ICU flow	Dip tubes	See Figure XVII-7 for details of system.	0.833 - 1.25 sp.gr.	
		SGR	Aqueous effluent sp.gr.	—	Dip tubes	Dip tubes→SGT-J7→SGR-J7	0.833 - 1.25	
		DPR	Column differential pressure	—	Dip tubes	Dip tubes→DPT-J7→DPR-J7	0 - 500"	
		FRC	ICX demineralized water flow	ICX demineralized water flow	Pneumatic rotameter		6.0 - 60.0 g.p.m.	1 1/2" DOV N.C. (1 1/4" plug). Reset by IBXP flow.
		TRY	ICX temperature	ICX temperature	Vapor filled bulb system	See Figure XVII-5 for details of system.	Set at 50°C.	
		FR	ICX HNO_3 flow	ICX HNO_3 flow	Metering pump		0.01 - 0.15 g.p.m.	Reset by IBXP flow.
		TIAS	ICX temperature	Alarm	Mercury filled bulb system		45°C. (Lo) and 50°C. (Hi)	
		FI	Pulse leakage flow	—	Flow pot	FE-J7→FI-J7-2	0.1 - 6.0 g.p.m.	
E-J8-1	ICU Concentrator system	SGRC	Specific Gravity	Resets steam flow to chest	Dip tubes	Dip tubes→SGT-J8-1→SGRC-J8→Resets FRC-J8-1 →SGT-J8-2→Resets FRC-J8-2	1.50 - 1.55 sp.gr. 1.0 - 1.625 sp.gr.	Dip tube spacing 40". Dip tube spacing 40".
		DPI	Differential pressure	—	Dip tubes	Dip tubes→DPT-J8→DPI-J8	0 - 50"	
		TR	Temperature of concentrator effluent	Shuts off steam flow to chest	Resistance element	See Figure XVII-10 for details of concentrator safety devices		
		WFR	Weight factor	Shuts off steam flow to chest	Dip tubes			
		FRC	Steam flow to chest	Steam flow to chest	Orifice			
		TR	Temperature of condenser cooling water outlet	—	Resistance element	TE-J8-3→GVT-J8-3→TR-J8-3	0 - 100°C.	
		TR	Temperature of condensate	—	Resistance element	TE-J8-2→GVT-J8-2→TR-J8-2	0 - 120°C.	
		FI	Water flow to condenser	Water flow to condenser	Orifice	FE-J8-2→FI-J8-2→FI-J8; VC-J8→DOV-J8-2	0 - 550 g.p.m. (at 100°)	4" DOV N.C.
		RR	Gamma of condensate flow to crib	—	Scintillation element	SCE-J8→SC-J8→GVT-J8-4→RR-J8		
		RR	Radiation of pot	—	Ion chamber	RE-J8→RS-E4→RA-E4→RR-E4		
		FR	$NaNO_2$ flow to pot	$NaNO_2$ flow to pot	Metering pump	MP-J8→FR-J8	0.01 - 0.15 g.p.m.	Reset by IBXP flow.
		WFI	Weight factor of seal pot	—	Dip tubes	Dip tubes→WFT-J8-1→WFI-J8	0 - 36"	
		VS		Water flow to seal pot		VS-J8→Do valve		1" Do valve N.C. on-off

NOTES: (a) All receiving instruments are on the Central Graphic Panel except where otherwise noted.

HW-31000

TABLE XVII-1

INSTRUMENT LEGEND

(A)	15 to 30-PSIG Instrument Air
AH	Alarm Horn
AI	Ammeter
AMP	Amplifier
ASP	Adjuster Set Pointer
BC	Brake Control
CRR	Counting Rate Recorder
CVT	Electric-Pneumatic Converter
DM	Displacement Meter
DO	Diaphragm-Operated Valve (On-Off)
DOV	Diaphragm-Operated Valve (Throttling)
DPI	Differential-Pressure Indicator
DPR	Differential-Pressure Recorder
DPT	Differential-Pressure Transmitter
DS	Delay Switch (Timer)
(E)	120 V,60 cycle
FAL	Flow Alarm Light
FAS	Flow Alarm Switch
FE	Flow Element
FI	Flow Indicator
FIC	Flow Indicator-Controller
FIX	Flow Indicator-Integrator
FR	Flow Recorder
FRC	Flow Recorder-Controller
FT	Flow Transmitter
FX	Flow Integrator
GG	Gage Glass
HO	Hydraulic Operator
HOP	Hydraulic-Operated Piston
IE	Interface Element
IRC	Interface Recorder-Controller
IT	Interface Transmitter
J	Jet
JC	Jet-Control Station
KAL	Fire Alarm Light
KAS	Fire Alarm Switch
KE	Fire Element
LAL	Level Alarm Light
PI	Pressure Indicator
PIAS	Pressure-Indicating Alarm Switch
PIC	Pressure Indicator-Controller
PMAL	Pulse-Generator Motor Alarm Light
PR	Pressure Recorder
PRC	Pressure Recorder-Controller
PRV	Pressure-Regulating Valve
PS	Pressure Switch
PT	Pressure Transmitter
PV	Snapacting Pilot Valve
Pulse Indicator	
[R]	Purge Rotameter
RA	Radiation Amplifier
RE	Radiation Element
RL	Relay
RR	Radiation Recorder
RS	Reset Switch
(S)	25-PSIG Steam
SC	Scintillation Counter
SCE	Scintillation-Counter Element
SE	Speed Element
SEC	Speed Controller
SGI	Specific-Gravity Indicator
SGR	Specific-Gravity Recorder
SGRC	Specific-Gravity Recorder Controller
SGT	Specific-Gravity Transmitter
SI	Speed Indicator
SPC	Speed Controller
SPK	Speaker
SR	Speed Recorder
SS	Selector Switch
SV	Safety Valve (Relief)
TAL	Temperature Alarm Light
TE	Temperature Element
TI	Temperature Indicator
TIAS	Temperature-Indicator Alarm Switch
TR	Temperature Recorder
TRC	Temperature Recorder-Controller

DPI	Differential-Pressure Indicator
DPR	Differential-Pressure Recorder
DPT	Differential-Pressure Transmitter
DS	Delay Switch (Timer)
E	120 V,60 cycle
FAL	Flow Alarm Light
FAS	Flow Alarm Switch
FE	Flow Element
FI	Flow Indicator
FIC	Flow Indicator-Controller
FIX	Flow Indicator-Integrator
FR	Flow Recorder
FRC	Flow Recorder-Controller
FT	Flow Transmitter
FX	Flow Integrator
GG	Gage Glass
HO	Hydraulic Operator
HOP	Hydraulic-Operated Piston
IE	Interface Element
IRC	Interface Recorder-Controller
IT	Interface Transmitter
J	Jet
JC	Jet-Control Station
KAL	Fire Alarm Light
KAS	Fire Alarm Switch
KE	Fire Element
LAL	Level Alarm Light
LAS	Level Alarm Switch
LE	Level Element
MK	Microphone
MP	Metering Pump
MS	Motor Switch
P	Pump
PAL	Pressure Alarm Light
PAS	Pressure Alarm Switch
PB	Push Button
PC	Pressure Control
PGAL	Pulse-Generator Alarm Light
pHA	pH Amplifier
pHE	pH Element
pHR	pH Recorder
R	Purge Rotameter
RA	Radiation Amplifier
RE	Radiation Element
RL	Relay
RR	Radiation Recorder
RS	Reset Switch
S	25-PSIG Steam
SC	Scintillation Counter
SCE	Scintillation-Counter Element
SE	Speed Element
SEC	Speed Controller
SGI	Specific-Gravity Indicator
SGR	Specific-Gravity Recorder
SGRC	Specific-Gravity Recorder Controller
SGT	Specific-Gravity Transmitter
SI	Speed Indicator
SPC	Speed Controller
SPK	Speaker
SR	Speed Recorder
SS	Selector Switch
SV	Safety Valve (Relief)
TAL	Temperature Alarm Light
TE	Temperature Element
TI	Temperature Indicator
TIAS	Temperature-Indicator Alarm Switch
TR	Temperature Recorder
TRC	Temperature Recorder-Controller
TRV	Temperature-Regulating Valve
VC	Valve Controller (Manual)
VE	Solenoid Valve
Vol. Cont.	Volume Control
VP	Pneumatic Reversing Relay
VS	Valve Selector Switch
WFAL	Weight-Factor Alarm Light
WFAS	Weight-Factor Alarm Switch
WFI	Weight-Factor Indicator
WFIC	Weight-Factor Indicator-Controller
WFR	Weight-Factor Recorder
WFRC	Weight-Factor Recorder-Controller
WFT	Weight-Factor Transmitter
WOBA	Wobble-Meter Amplifier
WOBE	Wobble-Meter Element
WOBR	Wobble-Meter Recorder

TABLE XVIII-2

DISSOLUTION AND HEAD-END INSTRUMENTS

Equipment Served No.	Equipment Served Name	Inst. Symbol	Instrument Function: Variable Sensed	Instrument Function: Variable Controlled	Type of Sensing Element	Signal Flow	Range	Remarks
TK-A3	Dissolver "A" System(a)(b)(c)	TR	Pot temperature	—	Pressure element	TE-A3-3 → GVT-A3 → TR-A3-3	0 - 150°C.	
		WFR	Weight factor in pot	(Alarm only)	Dip tubes	Dip tubes → WFT-A3 → WFR-A3; → WFAS-A3 → WFAL-A3 (hi)	0 - 261° 226°	
		SGR	Specific gravity	—	Dip tubes	Dip tubes → SGT-A3 → SGR-A3	1.0 - 2.0 sp.gr.	
		DPI	Differential pressure across tower	—	Dip tubes	Dip tubes → DPT-A3 → DPI-A3	0 - 25#	
		FI	Water flow to T-A3-1	Water flow to T-A3-1	Orifice	FE-A3-3 → FT-A3-3 → FI-A3-2; VO-A3-4 → DOV-A3-3	0 - 700 g.p.m. (at 200#)	4" DOV N.C.
		FIC	Demineralized water flow to T-A3-1	Demineralized water flow to T-A3-1	Orifice	FE-A3-4 → FT-A3-4 → FIC-A3-2 → DOV-A3-4; → FIX-A3-2	0 - 4 g.p.m. (at 100#)	1" DOV N.C. (3/8" plug) Head end auxiliary panel
		RR	Pot radiation	—	Ion chamber	RE-A3 → RS-A3 → RA-A3 → RR-A3	0 - 100°C.	
		TR	Temperature of condenser water outlet	—	Resistance element	TE-A3-1 → GVT-A3-1 → TR-A3-1		
		TR	Temperature of gas to off-gas heater	—	Resistance element	TE-A3-2 → GVT-A3-2 → TR-A3-2	0 - 100°C.	
		DM	Nitric acid flow to dissolver pot	Nitric acid flow to dissolver pot	Displacement meter	See Figure XVIII-5 for details of system (DM-A3-2)	0 - 62.5 g.p.m.	
		PRG	Pot pressure	Pot pressure	Dip tubes	See Figure XVIII-9 for details of system		
		FI	Steam (water and air) flow to pot coil	Steam (water and air) flow to pot coil	Orifice	See Figure XVIII-15 for details of system		
		DPI	Differential pressure across T-A3-2	—	Dip tubes	Dip tubes → DPT-A2-2 → DPI-A2-2	0 - 3.4#	
		TR	Temperature of gas from off-gas heater	(Alarm only)	Resistance element	TE-A2 → GVT-A2 → TR-A2; → TAS-A2 TAL-A2 (lo)	0 - 300°C. 9 p.s.i.g.	
		FR	Steam flow to off-gas heater coil	Steam flow to off-gas heater coil	Orifice	FE-A2 → FT-A2 → FR-A2; VS-A2 → Do valve	0 - 400 lb./hr. (at 100#)	2" DOV N.C. on-off
		PR	Pressure of off-gas heater coil	—	Pressure tap	Steam line pressure tap PT-A2 → PR-A2	0 - 300 p.s.i.g.	
		DM	$NaNO_3$ flow to pot	$NaNO_3$ flow to pot	Displacement meter	See Figure XVIII-5 for details of system (DM-A3-1)		1 1/2" DOV N.C.
		VG	—	Flow of chemicals to pot		VG-A3-2 → DOV-A3-2		
		DPI	Differential pressure across off-gas filter	—	Dip tubes	Dip tubes → DPT-A1 → DPI-A1; → PL-A1-1	0 - 12#	
		PI	Pressure in off-gas line	—				
		WFI	Weight factor in drowning tank	—	Dip tubes	Dip tubes → WFT-A3A → WFI-A3A-1; → WFT-A3A-2	0 - 64# 0 - 88.5#	
		VS	—	Water flow from drowning tank to dissolver pot		VS-A3A → Do valve		3" Do valve N.C. on-off
TK-D3	Metal solution Tank "A"(c)	WFR	Weight factor	(Alarm and agitator motor)	Dip tubes	Dip tubes → WFT-D3 → WFR-D3; → WFT-D3; → WFAS-D3-1 → WFAL-D3-1 (hi) and WFAL-D3-2 (lo); → WFAS-D3-2 → shuts off agitator motor	0 - 195# 0 - 206.5# 10.5# (lo) and 170# (hi) 30#	Local manometer
		SGR	Specific gravity	—	Dip tubes	Dip tubes → SGT-D3 → SGR-D3	1.0 - 2.0 sp.gr.	
		TR	Temperature	—	Resistance element	TE-D3 → GVT-D3 → TR-D3	0 - 100°C.	1 1/2" DOV N.C.
		PI	Pressure in coil line	Water flow to coil	Pressure tap	Pressure tap → PT-D3 → PI-D3-1; VG-D3 → DOV-D3; → PI-D3-2	0 - 70 p.s.i.g. 0 - 160 p.s.i.g.	Operating Gallery
TK-D1	Rinse Tank(c)	WFR	Weight factor	(Alarm only)	Dip tubes	Dip tubes → WFT-D1 → WFR-D1; → WFAS-D1 → WFAL-D1 (hi) and WFAL-D1-2 (lo)	0 - 111# 10# (lo) and 97# (hi)	
		SGR	Specific gravity	—	Dip tubes	Dip tubes → SGT-D1 → SGR-D1	1.0 - 2.0 sp.gr.	
		TR	Temperature	—	Resistance element	TE-D1 → GVT-D1 → TR-D1	0 - 100°C.	1 1/2" DOV N.C. (1 1/4" plug)
		PI	Pressure in coil line	Water flow to coil	Pressure tap	Pressure tap → PT-D1 → PI-D1-1; VG-D1 → DOV-D1; → PI-D1-2	0 - 70 p.s.i.g. 0 - 160 p.s.i.g.	Operating gallery
		PI	Pressure in tank	—	Dip tubes	Dip tubes → DPT-D1 → PI-D1-3	0 - 5#	
TK-D2	Coating Waste Tank(c)	WFR	Weight factor	(Alarm and agitator motor)	Dip tubes	Dip tubes → WFT-D2 → WFR-D2; → WFAS-D2-2 → WFAL-D2-1 (hi) and WFAL-D2-2 (lo); → WFAS-D2-1 → shuts off agitator motor	0 - 144# 10.4# (lo) and 115# (hi) 22#	
		TR	Temperature	—	Resistance element	TE-D2 → GVT-D2 → TR-D2	0 - 100°C.	1 1/2" DOV N.C. (1/4" plug)
		PI	Pressure in coil line	Water flow to coil	Pressure tap	Pressure tap → PT-D2 → PI-D2-1; VG-D2 → DOV-D2; → PI-D2-2	0 - 70 p.s.i.g. 0 - 160 p.s.i.g.	Operating gallery
		SGR	Specific gravity	—	Dip tubes	Dip tubes → SGT-D2 → SGR-D2	1.0 - 2.0 sp.gr.	
TK-E1	Slurry tank(c)	TR	Temperature	—	Resistance element	TE-E1 → GVT-E1 → TR-E1	0 - 100°C.	
		WFR	Weight factor	(Alarm and agitator motor)	Dip tubes	Dip tubes → WFT-E1 → WFR-E1; → WFAS-E1-1 → WFAL-E1-1 (hi) and WFAL-E1-2 (lo); → WFAS-E1-2 → shuts off agitator motor	0 - 82# 10# (lo) and 76# (hi) 14#	
		SGR	Specific gravity	—	Dip tubes	Dip tubes → SGT-E1 → SGR-E1	1.0 - 2.0 sp.gr.	
		PI	Pressure in coil line	Water flow to coil	Pressure tap	Pressure tap → PT-E1 → PI-E1-1; VG-E1 → DOV-E1; → PI-E1-2	0 - 70 p.s.i.g. 0 - 160 p.s.i.g.	1 1/2" DOV N.C. (1 1/4" plug) Operating gallery
		RR	Radiation	—	Ion chamber	RE-E1 → RS-A3 → RA-A3 → RR-A3		
TK-E3	Centrifuge Feed Tank(c)	TR	Temperature	—	Resistance element	TE-E3 → GVT-E3 → TR-E3	0 - 100°C.	
		WFR	Weight factor	(Alarm and agitator motor)	Dip tubes	Dip tubes → WFT-E3 → WFR-E3; → WFAS-E3-1 → WFAL-E3-1 (hi) and WFAL-E3-2 (lo); → WFAS-E3-2 → shuts off agitator motor	103# (lo) and 160# (hi) 29#	
		SGR	Specific gravity	—	Dip tubes	Dip tubes → SGT-E3 → SGR-E3	1.0 - 2.0 sp.gr.	Head end auxiliary panel
		RR	Radiation	—	Ion chamber	RE-E3 → RS-E2 → RA-E2 → RR-E2	0 - 70 p.s.i.g.	1 1/2" DOV N.C. (1 1/4" plug)
		PI	Pressure in coil line	Water flow to coil	Pressure tap	Pressure tap → PT-E3 → PI-E3-1; VG-E3-5 → DOV-E3-5; → PI-E3-2	0 - 160 p.s.i.g.	Operating gallery
G-E2	Centrifuge "A" (c)(e)	WFI	Weight factor	—	Dip tubes	Dip tubes → WFT-E2 → WFI-E2	0 - 50#	
		WOBR	Wobble	—		WOBR-E2 → WOBA-E2 → GVT-E2-3 → WOBR-E2		
		SI	Speed	—		SE-E2 → SS-E2 → SI-E2; → GVT-E2-2 → SR-E2		
		TR	Feed to centrifuge	—	Flow pot	FE-E2 → FT-E2 → FR-E2	1 - 16 g.p.m. (at 10.5#)	
		RR	Radiation	—	Ion chamber	RE-E2 → RS-E2 → RA-E2 → RR-E2		
TK-E2A	Chemical spray	WFI	Weight factor	—	Dip tubes	Dip tubes → WFT-E2A → WFI-E2A	0 - 72#	
		PI	Pressure in spray lines	—	Pressure tap	P-E2A discharge → Pressure tap → PT-E2A → PI-E2A-2; → VS-E2A-2 → DOV-E2A-2; → VS-E2A-1 → DOV-E2A-1; → VS-E2A-3 → DOV-E2A-3; → VS-E2A-4 → DOV-E2A-4	0 - 1500 p.s.i.g.	2" DOV N.C. on-off 2" DOV N.C. on-off 2" DOV N.C. on-off 2" DOV.N.C. on-off
		VS	—	Chemical spray to G-E2				
		VS	—	Chemical spray to G-E2				
		VS	—	Chemical spray to G-E2				
		VS		Chemical spray to G-E4				
TK-E5	Centrifuge Catch Tank(c)	TR	Temperature	—	Resistance element	TE-E5 → GVT-E5 → TR-E5	0 - 100°C.	
		WFR	Weight factor	(Alarm and agitator motor)	Dip tubes	Dip tubes → WFT-E5 → WFR-E5; → WFAS-E5-1 → WFAL-E5-1 (hi) and WFAL-E5-2 (lo); → WFAS-E5-2 → shuts off agitator motor	0 - 187# 0 - 159# 29#	
		SGR	Specific gravity	—	Dip tubes	Dip tubes → SGT-E5 → SGR-E5	1.0 - 2.0 sp.gr.	1 1/2" DOV N.C. (1 1/4" plug)
		PI	Pressure in coil line	Water flow to coil	Pressure tap	Pressure tap → PT-E5 → PI-E5-1; VG-E5 → DOV-E5; → PI-E5-2	0 - 70 p.s.i.g. 0 - 160 p.s.i.g.	Operating gallery
TK-E6	HAF Make-Up Tank(c)	SGR	Specific gravity	—	Dip tubes	Dip tubes → SGT-E6 → SGR-E6	1.0 - 2.0 sp.gr.	
		WFR	Weight factor	(Alarm and agitator motor)	Dip tubes	Dip tubes → WFT-E6 → WFR-E6; → WFAS-E6-1 → WFAL-E6-1 (hi) and WFAL-E6-2 (lo); → WFAS-E6-2 → shuts off agitator motor	0 - 179# 11# (lo) and 146# (hi) 27#	
		DM	Demineralized water flow	Demineralized water flow	Displacement meter	See Figure XVIII-5 for details of system (DM-E6-2)	0 - 37.5 g.p.m.	1/2" Do valve N.C. on-off
		VS	—	Flow of chemicals to tank		VS-E6-1 → Do valve		
		DM	Nitric acid flow	Nitric acid flow	Displacement meter	See Figure XVIII-5 for details of system (DM-E6-2)	0 - 37.5 g.p.m.	
		FI	Steam (water and air) flow to coil	Steam (water and air) flow to coil	Orifice	See Figure XVIII-15 for details of system		
		TR	Temperature	—	Resistance element	TE-E6 → GVT-E6 → TR-E6	0 - 100°C.	

NOTES:

(a) Dissolver "A" System includes T-A3-1 Dissolver Tower; E-A2 Condenser; T-A3-2 Deentrainment Tower; E-A2 Off-Gas Heater; T-A2 Silver Reactor "A"; F-A1 Off Gas Filter "A" and TK-A3A Drowning Tank.

(b) Instruments in Cells "B" and "C" are the same as "A" Cell except for equipment piece number.

(c) All Receiving Instruments are located on the Head End Graphic Panel except where otherwise noted.

(d) TK-D4 (Metal Solution Tank "B") and TK-D5 (Metal Solution Tank "C") have the same instruments as TK-D3 except for the equipment piece numbers.

(e) G-E4 (Centrifuge "B") has the same instruments as G-E2 except for the equipment piece numbers.

HW-31000

TABLE XVII-1

FINAL U CYCLE INSTRUMENTS

Equipment Served No.	Equipment Served Name	Inst. Symbol	Instrument Function: Variable Sensed	Instrument Function: Variable Controlled	Type of Sensing Element	Signal Flow	Range	Remarks
TK-K1	2DF Tank	WFRC	Weight Factor	Resets 2DF Flow (alarm, pump and agitator motors)	Dip tubes	Dip tubes→WFT-K1→WFRC-K1→Resets FRC-K1-2 →WFAS-K1-1→WFAL-K1-1 (Hi) and WFAL-K1-2 (Lo) →WFAS-K1-2→Shuts off pump and agitator motors	0 - 136" 108" (Lo) and 138" (Hi) 2.4" (pump and 7.5" (agitator)	
		SGR	Specific Gravity	—	Dip tubes	Dip tubes→SGT-K1→SGR-K1	1.0 - 2.0 sp.Gr.	
		FRC	HNO_3 flow to tank	HNO_3 flow to tank	Electronic Rotameter	FT-K1-1→GVT-K1-1→FRC-K1-1→DOV-K1-1	0.13 - 1.3 gpm	Reset by 2DF flow; 1" DOV N.C. (1/16" plug)
		MF	Flow of chemicals to tank	Flow of chemicals to tank	Metering pump	MF-K1→FR-K1	0.01 - 0.15 gpm	Reset by 2DF flow
		TR	Temperature	—	Resistance	TE-K1→GVT-K1-2→TR-K1	0 - 120°C.	
		FRC	2DF flow	2DF flow Repeats HNO_3 flow to tank Resets flow of chemicals to tank Resets 2DX flow Resets 2DW flow Resets 2EX HNO_3 flow Resets 2EX demineralized water flow	Electronic rotameter	FT-K1-2→GVT-K1-3→FRC-K1-2→VZ-K1→DOV-K1-2 →ASP-K1-1→FRC-K1-1 →ASP-K1-2→FR-K1 →ASP-K2-3→FRC-K2-3 →ASP-K2-4→FRC-K2-4 →ASP-K3-2→FR-K3 →ASP-K3-2→FRC-K3	0.9 - 9.0 gpm	Reset by weight factor; 1" DOV N.C. (1/2" plug)
		PI	Pressure in coil line	Water flow to coil	Pressure tap	Pressure tap→PT-K1→PI-K1-1; VC-K1→DOV-K1-3 →PI-K1-2	0 - 70 PSIG 0 - 160 PSIG	1 1/2" DOV N.C. (1 1/4" plug) Operating Gallery
T-K2	2D Column	IRC	Interface	Resets 2DS HNO_3 flow Resets 2DS demineralized water flow	Dip tubes	Dip tubes→YT-K2→IRC-K2→ASP-K2-1→FRC-K2-1 →ASP-K2-2→FRC-K2-2	0.833 - 1.66 sp.gr.	
		SGR	Specific Gravity Organic Effluent	—	Dip tubes	Dip tubes→SGT-K2→SGR-K2	0.833 - 1.66 sp.gr.	
		DPR	Column differential pressure	—	Dip tubes	Dip tubes→DPT-K2→DPR-K2	0 - 590"	
		FRC	2DS HNO_3 flow	2DS HNO_3 flow	Pneumatic rotameter	FT-K2-1→FRC-K2-1→DOV-K2-1	0.14 - 1.4 gpm	Reset by interface; 1" DOV N.C. (3/16" plug)
		FRC	2DS demineralized water flow	2DS demineralized water flow	Pneumatic rotameter	FT-K2-2→FRC-K2-2→DOV-K2-2	0.49 - 4.9 gpm	Reset by interface; 1" DOV N.C. (3/16" plug)
		FRC	2DX flow	2DX flow	Electronic rotameter	FT-K2-3→GVT-K2-2→FRC-K2-3→DOV-K2-3	3.1 - 31.0 gpm	Reset by 2DW flow; 2" DOV N.C. (1 1/2" plug)
		FRC	2DW flow	2DW flow	Electronic rotameter	FT-K2-4→GVT-K2-1→FRC-K2-4→DOV-K2-4	1.5 - 15.0 gpm	Reset by 2DF flow; 1" DOV N.C.
		FI	Pulse leakage flow	—	Flower pot	FE-K2→FI-K2-2	0.1 - 6.0 gpm	Operating Gallery
TK-K3	2E Column	IRC	Interface	2EU flow	Dip tubes	See Figure XVII-7 for details of system.	0.833 - 1.25 sp.gr.	
		SGR	Specific gravity aqueous effluent	—	Dip tubes	Dip tubes→SGT-K3→SGR-K3	0.833 - 1.25 sp.gr.	
		DPR	Column differential pressure	—	Dip tubes	Dip tubes→DPT-K3→DPR-K3	0 - 400"	
		FRC	2EX demineralized water flow	2EX demineralized water flow	Pneumatic rotameter	See Figure XVII-5 for details of system.		
		TRY	2EX temperature	2EX temperature	Capillary system			
		FR	2EX HNO_3 flow	2EX HNO_3 flow	Metering pump			
		TIAS	2EX temperature	Alarm	Capillary system			
		FI	Pulse leakage flow	—	Flower pot	FE-K3→FI-K3-2	0.1 - 6.0 gpm	Operating Gallery
E-K4-1	2EU Concentrator system	TR	Temperature of condenser cooling water outlet	—	Resistance	TE-K4-2→GVT-K4-2→TR-K4-2	0 - 100°C.	
		TR	Temperature of condensate	—	Resistance	TE-K4-3→GVT-K4-3→TR-K4-3	0 - 120°C.	
		FI	Water flow to condenser	Water flow to condenser	Orifice	FE-K4-2→FT-K4-2→FI-K4; VC-K4→DOV-K4-2	0 - 500 gpm (at 100")	4" DOV N.C.
		WF	Weight factor of seal pot	—	Dip tubes	Dip tubes→WFT-K4-1→WFI-K4	0 - 36"	
		VS		Water flow to seal pot		VS-K4→Do valve		1" DOV N.C. on-off
		RR	Radiation of pot	—	Ion chamber	RE-K4-1→RS-K4→RA-K4→RR-K4		Central auxiliary panel
		RR	Gamma of condensate to crib	—	Scintillation	SGE-K4→SC-K4→GVT-K4→RR-K4-1		
		WFR	Weight factor	Shuts off steam flow to chest	Dip tubes	See Figure XVII-10 for details of concentrator safety devices		
		FRC	Steam flow to chest	Steam flow to chest	Orifice			
		TR	Temperature of effluent	Shuts off steam flow to chest	Resistance			
		SGRC	Specific gravity	Resets steam flow to chest	Dip tubes	Dip tubes→SGT-K4-1→SGRC-K4→Resets FRC-K4-1 →Resets FRC-K4-2 →SGT-K4-2→SGR-K4	1.60 - 1.65 sp.gr. 1.00 - 1.60 sp.gr.	40" dip tube spacing 40" dip tube spacing
		RR	Radiation of pot	—	Ion chamber	RE-K4-2 RS-K4 RA-K4 RR-K4		
TK-K5	2EU Receiver	RR	Gamma of solution	—	Scintillation	SEC-K5-1→SEG-K5-1→SCE-K5→SC-K5→GVT-K5-2→RR-K5	0 - 120°C.	
		TR	Temperature	—	Resistance	TE-K5→GVT-K5-1→TR-K5	0 - 181"	
		WFR	Weight factor	(alarm and agitator motor)	Dip tubes	Dip tubes→WFT-K5→WFR-K5 →WFAS-K5-1→WFAL-K5-1 (Hi) and WFAL-K5-2 (Lo) →WFAS-K5-2→Shuts off agitator motor	129" (Lo) and 161" (Hi) 28"	
		SGR	Specific gravity	—	Dip tubes	Dip tubes→SGT-K5→SGR-K5	1.0 - 1.7 sp.gr.	
		PI	Pressure in coil line	Water flow to coil	Pressure tap	Pressure tap→PT-K5→PI-K5-1; VC-K5→DOV-K5 →PI-K5-2	0 - 70 psig 0 - 160 psig	1 1/2" DOV N.C. (1 1/4" plug) Operating Gallery
TK-K6	2EU Sample Tank	TR	Temperature	—	Resistance	TE-K6→GVT-K6→TR-K6	0 - 100°C.	
		WFR	Weight factor	(Alarm, agitator and pump motors)	Dip tubes	Dip tubes→WFT-K6→WFR-K6 →WFAS-K6-1→WFAL-K6-1 (Hi) and WFAL-K6-2 (Lo) →WFAS-K6-2→Shuts off pump and agitator motors	0 - 181" 129" (Lo) and 161" (Hi) 8" (pump) and 28" (agitator)	
		SGR	Specific gravity	—	Dip tubes	Dip tubes→SGT-K6→SGR-K6	1.0 - 2.0 sp.gr.	
		FR	Flow of chemicals to tank	Flow of chemicals to tank	Pneumatic rotameter	FT-K6→FR-K6; VC-K6-2→DOV-K6-2	2.0 - 20 gpm	2" DOV N.C.
		PI	Pressure in coil line	Water flow to coil	Pressure tap	Pressure tap→PT-K6→PI-K6-1; VC-K6-1→DOV-K6-1 →PI-K6-2	0 - 70 psig 0 - 160 psig	1 1/2" DOV N.C. (1 1/4" plug) Operating gallery
		PI	Pressure in vessel	—	Dip tubes	Dip tubes→DPT-K6→P -K6-3	0 - 5"	Central auxiliary panel
TK-F13	Utility Tank	TR	Temperature	—	Resistance	TE-F13→GVT-F13-1→TR-F13	0 - 100°C.	
		WFR	Weight factor	(Alarm, pump and agitator motors	Dip tubes	Dip tubes→WFT-F13 WFR-F13 →WFAS-F13-1→WFAL-F13-1 (Hi) and WFAL-F13-2 (Lo) →WFAS-F13-2→Shuts off pump and agitator motors	0 - 181" 66" (Lo) and 88" (Hi) 8" (pump) and 28" (agitator)	
		FI	Steam, water and air flow to coil	Steam, water and air flow to coil	Orifice	See Figure XVII-15 for details of system		
		FRC	Flow to decanter	Flow to decanter	Electronic rotameter	FT-F13-3→GVT-F13-2→FRC-F13→DOV-F13-2	1.5 - 15.0 gpm	1" DOV N.C. (3/4" plug)
		VC	—	Flow of $NaNO_2$ to tank		VC-F13-3→DOV-F13-4		1" DOV N.C. (3/4" plug)
		VC	—	Flow of chemicals to tank		VC-F13-4→DOV-F13-5		1" DOV N.C.
		RR	Radiation	—	Ion chamber	RE-F13→RS-F6→RA-F6→RR-F6		Central auxiliary panel
TK-F14	Decanter	WFR	Weight factor	—	Dip tubes	Dip tubes→WFT-F14→WFR-F14	0 - 77"	
		SGR	Specific gravity	—	Dip tubes	Dip tubes→SGT-F14→SGR-F14	0.8 - 1.5 sp.gr.	
		VS	—	Flow to acid recycle tank		VS-F14→DOV-F14		3" DOV N.C. on-off
TK-F1 (see Note c)	UNH Storage Tank	WFI	Weight factor	—	Dip tubes	Dip tubes→WFT-F1-1; WFI-F1-2; WFI-F1-3	0 - 206.3"	Local panel. See Note b.
		TR	Temperature	—	Resistance	TE-F1-1→TR-F1	0 - 60°C.	Local panel
		TRY	—	Temperature	Capillary system	TE-F1-2→TRY-F1	set at 25°C.	

Notes: (a) All receiving instruments are located on the central graphic pa: , except where otherwise noted.
(b) There are three manometers; each manometer measures across 10' 3 tank height.
(c) TK-F2 (UNH Storage Tank B), TK-F3 (UNH Storage Tank C) and TK-F4 (UNH Storage Tank D) have the same instruments as TK-F1 except for the equipment piece number.

HW-31000

TABLE XVII-6

FINAL PLUTONIUM CYCLE AND PLUTONIUM CONCENTRATION INSTRUMENTS

Equipment Served No.	Equipment Served Name	Inst. Symbol	Variable Sensed	Variable Controlled	Type of Sensing Element	Signal Flow	Ranges	Remarks
TK-J3	2AF Tank[a]	TR	Temperature	—	Resistance element	TE-J3 → GVT-J3-3 → TR-J3	0 - 60°C.	
		WFRC	Weight factor	2AF flow (alarm shuts off pump, and agitator motors)	Dip tubes	Dip tubes → WFI-J3 → WFRC-J3 → FRC-J3-3 → WFAL-J3-1 → WFAL-J3-1 (Hi) and WFAL-J3-2 (Lo) → XFAB-J3-2 → shuts off pump motor → WFAS-J3-3 → shuts off both agitator motors	0 - 40° 18" (Lo) and 32" (Hi) 6.5" 12"	
		SGR	Specific gravity	—	Dip tubes	Dip tubes → SGT-J3 → SGR-J3	1.0 - 2.0 sp.gr.	
		FRC	Flow of $NaNO_3$ to tank	Flow of $NaNO_3$ to tank	Pneumatic rotameter	FT-J3-3 → FRC-J3-1 → DOV-J3-3	0.036 - 0.16 g.p.m.	1" DOV N.C. (#3 spline plug). Reset by 2AF flow.
		FRC	Flow of HNO_3 to tank	Flow of HNO_3 to tank	Electronic rotameter	FT-J3-4 → GVT-J3-2 → FRC-J3-2 → DOV-J3-4	0.19 - 1.9 g.p.m.	1" DOV N.O. (3/8" plug). Reset by 2AF flow.
		FRC	2AF flow	2AF flow Reset flow of $NaNO_3$ to tank Reset flow of HNO_3 to tank Reset 2AS flow Reset, 2AX flow (new) Reset 2AX flow (reused) Reset 2BF flow	Electronic rotameter	FT-J3-5 → GVT-J3-1 → FRC-J3-1 → TR-L1 → DOV-L1-5 → ASF-J3-1 → FRC-J3-1 → ASF-J3-2 → FRC-J3-2 → ASF-L1-1 → FRC-L1-1 → ASF-L1-2 → FRC-L1-2 → ASF-L1-3 → FRC-L1-3 → ASF-L2 → FRC-L2	0.55 - 5.5 g.p.m.	1" DOV F.O. (3/8" plug). Reset by weight factor.
		FX	Steam, water and air flow to coil	Steam, water and air flow to coil	Orifice	See Figure XVII-13 for details of coil controls		
T-L1	2A Column[a]	INC	Interface	2AV flow	Capacitance probe	IE-L1-1 → IA-L1-1 → INC-L1 → DOV-L1-4		
			Dielectric of organic phase	—	Capacitance probe	IE-L1-2 → IA-L1-2 → IT-L1		
		DPR	Column differential pressure	—	Dip tubes	Dip tubes → DPT-L1 → DPR-L1	0 - 590"	
		FRC	2AX flow (new)	2AX flow (new)	Electronic rotameter	FT-L1-2 → GVT-L1-2 → FRC-L1-2 → DOV-L1-2	0.13 - 1.3 g.p.m.	1" DOV N.C. (1/4" plug). Reset by 2AF flow.
		FRC	2AX flow (reused)	2AX flow (reused)	Electronic rotameter	FT-L1-3 → GVT-L1-1 → FRC-L1-3 → DOV-L1-3	0.13 - 1.3 g.p.m.	1" DOV F.O. (1/16" plug). Reset by 2AF flow.
		FRC	2AS flow	2AS flow	Pneumatic rotameter	FT-L1-1 → FRC-L1-1 → DOV-L1-1	0.066 - 0.66 g.p.m.	1" DOV F.O. (1/16" plug). Reset by 2AF flow.
		FI	Pulse leakage flow	—	Flow pot	FR-L1 → FI-L1-2	0.1 - 8.0 g.p.m.	Operating Gallery.
T-L2	2B Column[a]	INC	Interface	2BX flow	Dip tubes	Dip tubes → IT-L2 → INC-L2	0.025 - 1.25 sp.gr.	Dip tube spacing is 6".
		FR	2BX flow	—	Pneumatic rotameter	FT-L2-1 → FR-L2; DOV-L2-1	0.066 - 0.66 g.p.m.	1" DOV N.C. (3/16" plug). Control by interface.
		TRT	2BX temperature	2BX temperature	Vapor filled bulb system	TI-L2-2 → INV-L2 → Hot Exchanger → to column	Set at 40°C.	
		TIAS	2BX temperature	Alarm	Mercury filled bulb system	TE-L2-1 → TIAS-L2 → TAL-L2-1 (Hi) and TAL-L2-2 (Lo)	0 - 250°C.	
		DPR	Column differential pressure	—	Dip tubes	Dip tubes → DPT-L2 → DPR-L2	0 - 400"	
		FI	Pulse leakage flow	—	Flow pot	FR-L2 → FI-L2-2	0.1 - 6.0 g.p.m.	Operating Gallery
		FRC	2BF flow	2BF flow Resets flow to #1 Pu Concentrator	Electronic rotameter	FT-L2-2 → GVT-L2 → FRC-L2 → DOV-L2-2 → ASF-L3 → FRC-L3-1	0.066 - 0.66 g.p.m.	1" DOV N.O. (3/16" plug). Reset by 2AF flow.
T-L3	Pu stripper[a]	TR	Vapor temperature	—	Resistance element	TE-L3-1 → GVT-L3-2 → TR-L3	0 - 120°C.	
		FRC	Flow to #1 Pu Concentrator	Reset steam flow	Electronic rotameter	FT-L3-2 → GVT-L3-1 → FRC-L3-1 → Resets FRC-L3-2	0.034 - 0.34 g.p.m.	Reset by 2BF flow.
		PR	Gamma of 2BF flow	—	Scintillation element	SCE-L3 → SC-L3 → GVT-L3-3 → PR-L3		
		FRC	Steam flow to chest	Steam flow to chest	Orifice	See Figure XVII-11 for details of safety devices.		
		WFR	Weight factor	—	Dip tubes			
		SGR	Specific gravity	—	Dip tubes	Dip tubes → SGT-L3 → SGR-L3	1.0 - 1.25 sp.gr.	Dip tube spacing is 20".
E-L4	#1 Pu Concentrator Including E-L5 Condenser[a]	FFC	Steam flow to chest	Steam flow to chest	Orifice	See Figure XVII-11 for details of safety devices.		
		WFRC	Weight factor	Resets steam flow to chest	Dip tubes			
		SGR	Specific gravity	—	Dip tubes	Dip tubes → SGT-L4 → SGR-L4	1.0 - 1.25 sp.gr.	Dip tube spacing is 20".
		DPI	Differential pressure	—	Dip tubes	Dip tubes → DPT-L4 → DPI-L4	0 - 12"	
		TR	Temperature of cooling water outlet	—	Resistance element	TE-L5-1 → GVT-L5-1 → TR-L5-2	0 - 100°C.	
		TR	Temperature of condensate	—	Resistance element	TE-L5-2 → GVT-L5-2 → TR-L5-2	0 - 120°C.	
		FR	Water flow to condenser	Water flow to condenser	Orifice	FE-L5 → FT-L5 → FR-L5; VC-L5 → DOV-L5-1	0 - 10 g.p.m. (at 120°)	1 1/2" DOV N.O. (3/4" plug)
		VC	—	Bottoms from #1 Pu Concentrator to Product Receiver		VC-L4 → VE-L4-1 → DOV-L4-2 Cycle Timer-L4	1" DOV F.O. (3/16" plug)	Set at 15 seconds closed and 5 minutes open.
		TR	Vapor temperature	—	Resistance element	TE-L4-1 → GVT-L4 → TR-L4	0 - 120°C.	
E-L7	#2 Pu Concentrator system[a]	VC	—	Bottoms from #2 Pu Concentrator to bottom of #1 Pu Concentrator		VC-L7 → VE-L7-1 → DOV-L7-2 Cycle Timer-L7		1" DOV N.C. (3/16" plug) Set at 15 seconds closed and 5 minutes open
		FRC	Steam flow to chest	Steam flow to chest	Orifice	See Figure XVII-11 for details of safety devices.		
		WFRC	Weight factor	Resets steam flow to chest	Dip tubes			
		SGR	Specific gravity	—	Dip tubes	Dip tubes → SGT-L7 → SGR-L7	1.0 - 1.25 sp.gr.	Dip tube spacing is 20".
		DPI	Differential pressure	—	Dip tubes	Dip tubes → DPT-L7 → DPI-L7	0 - 12"	
		TR	Vapor temperature	—	Resistance element	TE-L7-1 → GVT-L7 → TR-L7	0 - 120°C.	
		TR	Temperature of condenser water outlet	—	Resistance element	TE-L8-1 → GVT-L8-1 → TR-L8-1	0 - 100°C.	
		TR	Temperature of condensate	—	Resistance element	TE-L8-2 → GVT-L8-2 → TR-L8-2	0 - 120°C.	
		FR	Water flow to condenser	Water flow to condenser	Orifice	FE-L8 → FT-L8 → FR-L8; VC-L8 → DOV-L8	0 - 25 g.p.m. (at 200°)	3/4" DOV N.O.
TK-L6	Product Receiver[b]	WFR	Weight factor	—	Dip tubes	Dip tubes → WFT-L6 → WFR-L6 → WFI-L6	0 - 100"	
		SGR	Specific gravity	—	Dip tubes	Dip tubes → SGT-L6 → SGR-L6	1.0 - 1.25 sp.gr.	Dip tube spacing is 20".
		TR	Temperature of feed inlet	—	Resistance element	TE-L6 → GVT-L6 → TR-L6	0 - 120°C.	
		RR	Pot radiation	—	Ion chamber	RE-L6 → RA-L6 → RR-L6		Central auxiliary panel.
		VS	—	Flow from TK-L6 to E-L4		VE-L6 → DOV-L6-1 → DOV-L6-2		1" DOV N.O. on-off 1" DOV N.C. on-off
		DOV	—	Vessel vent line				1/2" DOV N.O. (1/16" plug)
		PI	Pressure of jacket	Water flow to jacket	Pressure tap	Pressure tap → PT-L6 → PI-L6; VC-L6 → DOV-L6-3	0 - 70 p.s.i.g.	
TK-L11	Vacuum Tank and E-L12 Condenser[b]	SGR	Specific gravity	—	Dip tubes	Dip tubes → SGT-L11 → SGR-L11	1.0 - 1.25 sp.gr.	Dip tube spacing is 20".
		WFR	Weight factor	—	Dip tubes	Dip tubes → WFT-L11 → WFR-L11	0 - 209"	
		PIC	Tank pressure	Pressure in tank	Dip tubes	Dip tubes → PT-L11 → PIC-L11 → DOV-L11-2	0 - 100"	1" DOV N.C. on-off
		TI	Temperature of condenser water outlet	—	Mercury filled bulb system	TE-L12-1 → TI-L12-1	0 - 110°C.	
		TI	Temperature of condensate	—	Mercury filled bulb system	TE-L12-2 → TI-L12-2	0 - 110°C.	
		FI	Water flow to coil	—	Orifice	FE-L12 → FT-L12 → FI-L12	0 - 20 g.p.m. (at 100°)	
TK-L10	Product Sampler[b]	VC	—	Flow from TK-L6		VE-L10 → DOV-L10-3		1 1/2" DOV N.C.
		VS	—	Flow from TK-L10		VS-L10-1 → DOV-L10-1		1" DOV N.O. on-off
		VS	—	Vessel vent line		VS-L10-2 → DOV-L10-2		1/2" DOV N.O. on-off
		WFI	Weight factor	—	Dip tubes	Dip tubes → WFT-L10 → WFI-L10	0 - 8"	
		PI	Vapor pressure	—	Dip tubes	Dip tubes → PT-L10 → PI-L10	0 - 30"	Mercury vacuum
		RR	Pot radiation	—	Ion chamber	RE-L10 → RA-L10 → RA-L10 → RR-L10		
TK-L9	Product Sampler[b]	WFI	Weight factor	—	Dip tubes	Dip tubes → WFT-L9 → WFI-L9	0 - 8"	
		PI	Vapor pressure	—	Dip tubes	Dip tubes → PT-L9 → PI-L9	0 - 30"	Mercury vacuum
		VC	—	Flow from TK-L6		VC-L9 → DOV-L9-3		1/2" DOV N.C.
		VS	—	Flow from TK-L9		VS-L9-1 → DOV-L9-2		1" DOV N.C. on-off
		VS	—	Vessel vent line		VS-L9-2 → DOV-L9-1		1/2" DOV N.C. on-off
		RR	Pot radiation	—	Ion chamber	RE-L9 → RA-L10 → RA-L10 → RR-L10		
TK-L9A	(b)	WFI	Weight factor	—	Dip tubes	Dip tubes → WFI-L9A → WFI-L9A-1 → WFI-L9A-2	0 - 73" 0 - 70.5"	Manometer

NOTES: (a) All receiving instruments are on Central Graphic Panel except where otherwise noted.
(b) Located on local panel.

HW-31000

TABLE XVII-7

ACCURIDE MAKE-UP INSTRUMENTS

Equipment Served No.	Equipment Served Name	Inst. Symbol	Variable Sensed	Variable Controlled	Type of Sensing Element	Signal Flow	Range	Remarks
TK-211	24S Make-Up TK-A	WFI	Weight factor	(Alarm only)	Dip tubes	Dip tubes → WFI-211 → WFI-211-1 WFI-211-2 WFAS-211 → WFAL-211 (Lo) and AH-D3	0 - 110" 0 - 70.8" 6"	Central Graphic Panel. Manometer local panel. Local panel
TK-210	18X Make-Up TK-A	WFI	Weight factor	(Alarm only)	Dip tubes	Dip tubes → WFI-210 → WFI-210-1 WFI-210-2 WFAS-210 → WFAL-210 (Lo) and AH-D4	0 - 175" 0 - 163.2" 6"	Central Graphic Panel Manometer local panel Local panel
TK-212	24S Make-Up TK-B	WFI	Weight factor	(Alarm only)	Dip tubes	Dip tubes → WFI-212 → WFI-212-1 WFI-212-2 WFAS-212 → WFAL-212 (Lo) and AH-D3	0 - 100" 0 - 70.8" 6"	Central Graphic Panel Manometer local panel. Local panel
TK-209	18X Make-Up TK-B	WFI	Weight factor	(Alarm only)	Dip tubes	Dip tubes → WFI-209 → WFI-209-1 WFI-209-2 WFAS-209 → WFAL-209 (Lo) and AH-D4	0 - 175" 0 - 163.2" 6"	Central Graphic Panel. Manometer local panel. Local Panel
TK-220	$NaNO_3$ Addition Tank	WFI	Weight factor	(Alarm only)	Dip tubes	Dip tubes → WFI-220 → WFI-220-1 WFI-220-2 WFAS-220 → WFAL-220 (Lo) and AH-D7	0 - 122" 0 - 106.2" 6"	Central Graphic Panel. Manometer local panel. Local panel.
TK-106	$NaNO_3$ Make-Up Tank	WFI TI PI PI	Weight factor Temperature Pressure in coil line Pump discharge pressure	— — — —	Dip tubes Mercury filled bulb system Pressure tap Pressure tap	Dip tubes → WFI-106 TI-106 → TI-106 Pressure tap → PI-106-1 Pump discharge line tap → PI-106-2	0 - 70.8" -40°C. to +50°C. 0 - 160 p.s.i.g. 0 - 60 p.s.i.g.	Manometer local panel. Local panel. Local panel. Local panel
TK-217	2DF Addition Tank	WFI	Weight factor	(Alarm only)	Dip tubes	Dip tubes → WFI-217 → WFI-217-1 WFI-217-2 WFAS-217 → WFAL-217 (Lo) and AH-D1	0 - 107" 0 - 70.8" 5.5"	Central Graphic Panel. Manometer local panel Local panel
TK-213	2SX Make-Up TK-A	WFI	Weight factor	(Alarm only)	Dip tubes	Dip tubes → WFI-213 → WFI-213-1 WFI-213-2 WFAS-213 → WFAL-213 (Lo) and AH-D2	0 - 110" 0 - 70.8" 6"	Central Graphic Panel Manometer local panel Local panel
TK-215	60% HNO_3 metering tank	WFI	Weight factor	—	Dip tubes	Dip tubes → WFI-215	0 - 70.8"	Manometer local panel
TK-216	$Fe(NH_2SO_3)_2$ metering tank	WFI	Weight factor	—	Dip tubes	Dip tubes → WFI-216	0 - 70.8"	Manometer local panel
TK-214		WFI	Weight factor	(Alarm only)	Dip tubes	Dip tubes → WFI-214 → WFI-214-1 WFI-214-2 WFAS-214 → WFAL-214 (Lo) and AH-D2	0 - 110" 0 - 70.8" 6"	Central Graphic Panel Manometer local panel Local panel
TK-101	$Fe(NH_2SO_3)_2$ Adjusting Tank	WFI	Weight factor	(Alarm only)	Dip tubes	Dip tubes → WFI-101 WFAS-101 → WFAL-101 (Lo) and AH-D15	0 - 106.2" 7"	Dip tubes are nitrogen purged. Local panel
		FI PI PI	Nitrogen flow to tank Pressure in tank Pump discharge pressure	— — —	Indicating rotameter Pressure tap Pressure tap	FI-101 Pressure tap → PI-101-1 Pump discharge tap → PI-101-2	0.4 - 4.0 SCFM -30" to +30" 0 - 100 p.s.i.g.	Local panel Local panel Local panel
TK-103	$Fe(NH_2SO_3)_2$ Make-Up Tank	WFI	Weight factor	(Alarm only)	Dip tubes	Dip tubes → WFI-103 WFAS-103 → WFAL-103 (Lo) and AH-D15	0 - 106.2" 19"	Dip tubes are nitrogen purged. Local panel
		TI PI FI PI PI	Temperature Pressure in tank Nitrogen flow to tank Pressure in coil line Pump discharge pressure	— — — — —	Mercury filled bulb system Pressure tap Indicating rotameter Pressure tap Pressure tap	TI-103 → TI-103 Pressure tap → PI-103-2 FI-103 Pressure tap → PI-103-1 Pump discharge line tap → PI-103-3 and PI-103-4	-40°C. to +50°C. -30" to +30" 0.4 - 4.0 SCFM 0 - 160 p.s.i.g. 0 - 100 p.s.i.g.	Local panel Local panel Local panel Local panel Local panel
TK-218	HAF Make-Up Addition Tank	WFI	Weight factor	—	Dip tubes	Dip tubes → WFI-218 → WFI-218-1 WFI-218-2	0 - 60" 0 - 70.8"	Head end auxiliary panel board Manometer local panel
TK-201	Dissolver "A" Addition Tank	WFI	Weight factor	—	Dip tubes	Dip tubes → WFI-201 → WFI-201-1 WFI-201-2	0 - 122" 0 - 106.2"	Head End Graphic Panel Manometer local panel
		SGI	Specific gravity	—	Dip tubes	Dip tubes → SGT-201 → SGI-201	1.0 - 2.0 sp.gr.	Head End Graphic Panel
TK-202	Dissolver "B" Addition Tank	WFI	Weight factor	—	Dip tubes	Dip tubes → WFI-202 → WFI-202-1 WFI-202-2	0 - 122" 0 - 106.2"	Head End Graphic Panel Manometer local panel
		SGI	Specific gravity	—	Dip tubes	Dip tubes → SGT-202 → SGI-202	1.0 - 2.0 sp.gr.	Head End Graphic Panel
TK-219	Utility $NaNO_3$ Addition Tank	WFI	Weight factor	—	Dip tubes	Dip tubes → WFI-219 → WFI-219-1 WFI-219-2	0 - 80" 0 - 70.8"	Central Graphic Panel Manometer local panel
TK-222	HNO_3 Head Tank	WFI	Weight factor	(Alarm only)	Dip tubes	Dip tubes → WFI-222-1 → WFI-222 WFAS-222 → WFAL-222-1 (Hi) and WFAL-222-2 (Lo) WFAL-222-3 (Hi) and AH-D6	0 - 122" 55" (Lo) and 77" (Hi)	Central Auxiliary Graphic Panel Local panel Central Auxiliary Panel
		WFIC TRV TI	Weight factor Temperature Temperature	Flow from Tank Farm 211A Steam flow to coil Mercury —	Dip tubes Vapor filled bulb system Mercury filled bulb system	Dip tubes → WFI-222-2 → WFIC-222 → DOV-222 Discharge line → TE-222-2 → TRV-222 " TE-222-1 → TI-222	0 - 122" -40°C. to +50°C.	Local panel Local panel Local panel
TK-221	Head End Wash Addition Tank	WFI	Weight factor	—	Dip tubes	Dip tubes → WFI-221 → WFI-221-1 WFI-221-2	0 - 122" 0 - 106.2"	Head End Auxiliary Panel Manometer Local Panel
TK-203	Dissolver "C" Addition Tank	WFI	Weight factor	—	Dip tubes	Dip tubes → WFI-203 → WFI-203-1 WFI-203-2	0 - 122" 0 - 106.2"	Head End Graphic Panel Manometer Local Panel
		SGI	Specific gravity	—	Dip tubes	Dip tubes → SGT-203 → SGI-203	1.0 - 2.0 sp.gr.	Head End Graphic Panel
TK-204	Waste Rework Addition Tank	WFI	Weight factor	—	Dip tubes	Dip tubes → WFI-204 → WFI-204-1 WFI-204-2	0 - 122" 0 - 106.2"	Head End Auxiliary Panel Manometer Local Panel
TK-224	Solvent Head Tank	WFIC	Weight factor	Flow from Tank Farm to tank (also alarm)	Dip tubes	Dip tubes → WFI-224-2 → WFIC-224 → DOV-224-1 WFAS-224-2 → WFAL-224-3 (Hi); WFAL-224-4 (Lo) and AH-D10	0 - 195" 43" (Lo) and 80" (Hi)	1 1/2" DOV H.C. Local Panel Local Panel
		WFI	Weight factor	(Alarm only)	Dip tubes	Dip tubes → WFI-224-1 → WFI-224 WFAS-224-1 → WFAL-224-1 (Hi) and WFAL-224-2 (Lo)	0 - 195" 63"(Lo) and 80" (Hi)	Central Auxiliary Panel Central Auxiliary Panel
TK-105	Wash Make-Up Tank	WFI TI PI PI	Weight factor Temperature Pressure in coil line Pump pressure	— — — —	Dip tubes Mercury filled bulb system Pressure tap Pressure tap	Dip tubes → WFI-105 TI-105 → TI-105 Pressure tap → PI-105-1 Pump discharge line tap → PI-105-2	0 - 126.4" -40°C. to +50°C. 0 - 160 p.s.i.g. 0 - 100 p.s.i.g.	Manometer Local Panel Local Panel Local Panel At pump
TK-205	Utility Addition Tank	WFI	Weight factor	(Alarm only)	Dip tubes	Dip tubes → WFI-205 → WFI-205-1 WFI-205-2 WFAS-205 → WFAL-205 (Lo) and AH-D12	0 - 122" 0 - 106.2" 9"	Central Auxiliary Panel Manometer Local Panel Local Panel
TK-206	NaOH Addition Tank	WFI	Weight factor	—	Dip tubes	Dip tubes → WFI-216 → WFI-216-1 WFI-216-3 WFI-216-2	0 - 122" 0 - 106.2"	Head End Auxiliary Panel Central Auxiliary Panel Manometer Local Panel
TK-207	$NaNO_3$ Addition Tank	WFI	Weight factor	—	Dip tubes	Dip tubes → WFI-207 → WFI-207-1 WFI-207-2	0 - 175" 0 - 116"	Head End Auxiliary Panel Manometer Local Panel
TK-208	Na_2CO_3 Addition Tank	WFI	Weight factor	—	Dip tubes	Dip tubes → WFI-208 → WFI-208-1 WFI-208-2	0 - 175" 0 - 116"	Central Auxiliary Panel Manometer Local Panel
TK-223	Demineralized Water Head Tank	WFIC	Weight factor	Flow from Tank Farm to Tank (also alarm)	Dip tubes	Dip tubes → WFI-223 → WFIC → DOV-223 WFI-223 WFAS-223 → WFAL-223 → WFAL-223-1 (Hi) and WFAL-223-2 (Lo) WFAL-223-3 (Lo) and AH-D6	0 - 96" 6" (Lo) and 86" (Hi)	4" DOV H.C. Local Panel Central Auxiliary Panel Central Auxiliary Panel Local Panel
TK-104	$NaNO_3$ Make-Up Tank	WFI TI PI PI	Weight factor Temperature Pressure in coil line Pressure in pump discharge line	— — — —	Dip tubes Mercury filled bulb system Pressure tap Pressure tap	Dip tubes → WFI-104 TI-104 → TI-104 Pressure tap → PI-104-1 Pressure tap → PI-104-2	0 - 116" -40°C. to +50°C. 0 - 160 p.s.i.g. 0 - 60 p.s.i.g.	Manometer local panel Local Panel Local Panel Local Panel
TK-107	Na_2CO_3 Make-Up Tank	WFI PI	Weight factor Pressure in pump discharge line	— —	Dip tubes Pressure tap	Dip tubes → WFI-107 Pressure tap → PI-107	0 - 116" 0 - 100 p.s.i.g.	Manometer local panel Local Panel

HW-31000

TABLE XVII-6

SOLVENT TREATMENT INSTRUMENTS

No.	Name	Inst. Symbol	Instrument Function: Variable Sensed	Instrument Function: Variable Controlled	Type of Sensing Element	Signal Flow	Range	Remarks
TK-01	IOF Tank[a]	WFRG	Weight factor	(Alarm and pump motors)	Dip tubes	Dip tubes → WFT-01 → WFRG-01 → Resets FRG-01-2 → WFAS-01-1 → WFAL-01-1 (Hi) and WFAL-01-2 (Lo) → WFAS-01-2 → Shuts off pump motors	0 - 126" 61" (Lo) and 77" (Hi) 6.25"	
		SGR	Specific gravity	—	Dip tubes	Dip tubes → SGT-01 → SGR-01	0.8 - 1.5 sp.gr.	
		TRG	Temperature	Resets steam flow to coil	Resistance element	TR-01 → GVT-01-1 → TRG-01 → Resets FRG-01-1	0 - 100°C.	
		PHR	pH	—	Glass and calomel electrodes	pHE-01 → pHX-01 → GVT-01-2 → pHR-01	6 - 13 pH	
		FI	Steam, water and air flow to coil	Steam, water and air flow to coil	Orifice	See Figure XVII-15 for details of system		
		FRG	IOF flow to column	IOF flow to column	Electronic rotameter	FT-01-3 → GVT-01-3 → FRG-01-2 → VS-01-4 → DOV-01-3	7.2 - 72 g.p.m.	2" DOV N.C. (1 3/4" plug). Reset by weight factor.
		VS	—	Flow from Na_2CO_3 Tank 322		VS-01-2 → Do valve		2" Do valve N.C. on-off
		VS	—	Flow from Solvent Bleed TK-31A		VS-01-3 → Do valve		2" Do valve N.C. on-off
		PI	Pressure in recirculation line	—	Pressure tap	Pump P-01-1 discharge → PT-01 → PI-01-1	0 - 30 p.s.i.g.	"Hot" cell installation
T-02	IO Contactor[a]	IRG	Interface	IOW flow	Dip tubes	Dip tubes → IT-02 → IRG-02 → DOV-02-5	0.833 - 1.25 sp.gr.	
		SGR	Aqueous effluent specific gravity	—	Dip tubes	Dip tubes → SGT-02-1 → SGR-02-1	0.8 - 1.5 sp.gr.	
		DPI	Differential pressure in top disengaging section	(Alarm only)	Dip tubes	Dip tubes → PT-02 → PI-02 → PAS-02 → PAL-02	0 - 10.5" 8.8"	
		DPR	Differential pressure across column	—	Dip tubes	Dip tubes → DPT-02 → DPR-02	0 - 450"	
		FI	Pulse leakage flow	—	Flow pot	FE-02-3 → FI-02-3	0.1 - 6.0 g.p.m.	Operating Gallery
		VS	—	Flow from column to 0-03		VS-02-1 → DOV-02-6		4" DOV N.C. on-off
		VS	—	Flow from column to 0-04		VS-02-3 → DOV-02-7		4" DOV N.C. on-off
TK-02	IOW Tank[a]	WFR	Weight factor	(Alarm and pump motor)	Dip tubes	Dip tubes → WFT-02 → WFR-02 → WFAS-02-1 → WFAL-02-1 (Hi) and WFAL-02-2 (Lo) → WFAS-02-2 → shuts off pump motors	0 - 101" 66" (Lo) and 90" (Hi) 6.25"	
		SGR	Specific gravity	—	Dip tubes	Dip tubes → SGT-02-2 → SGR-02-2	1.0 - 1.5 sp.gr.	
		pHR	pH	—	Glass and calomel electrodes	pHE-02 → pHX-02 → GVT-02-3 → pHR-02	6 - 13 pH	
		FI	Steam, water and air flow to coil	Steam, water and air flow to coil	Orifice	See Figure XVII-15 for details of system		
		FRG	IOW flow to IO contactor	IOW flow to IO contactor	Electronic rotameter	FT-02-3 → GVT-02-1 → FRG-02-2 → DOV-02-4	2.5 - 25 g.p.m.	2" DOV N.C. (1 1/4" plug)
		TRG	Temperature	Resets steam flow to coil	Resistance element	TE-02 → GVT-02-2 → TRG-02 → Resets FRG-02-1	0 - 100°C.	
		VS	—	Flow of Na_2CO_3 to tank		VS-02-4 → Do valve		2" Do valve N.C. on-off
TK-03-A	IO Centrifuge Spray Tank[a]	WFI	Weight factor	—	Dip tubes	Dip tubes → WFT-03A → WFI-03A-1 → WFI-03A-2	0 - 71" 0 - 70.8"	Manometer located on tank
		PI	Pressure in pump line	—	Pressure tap	Pump line → PT-03A → PI-03A	0 - 1500 p.s.i.g.	
				Chemical spray		→ DOV-03A-1 VS-03A-1 → DOV-03A-2		2" DOV N.C. on-off
				Chemical spray				2" DOV N.C. on-off
0-03	IO Centrifuge #a[a]			Chemical spray		→ DOV-03A-3 VS-03A-2 → DOV-03A-4		2" DOV N.C. on-off
				Chemical spray				
		SI	Speed	—		SE-03 → SS-03-1 → SI-03 → CVT-03 → SR-03		
		WOBR	Wobble	—		WOBE-03 → WOBX-03 → GVT-03-1 → WOBR-03	0 - 35"	
		WFI	Weight factor	—	Dip tubes	Dip tubes → WFT-03 → WFI-03		
0-04	IO Centrifuge #a[a]	Has same instruments as 0-03 except for equipment piece numbers						
TK-05	ITO Tank #a[a]	WFR	Weight factor	(Alarm, agitator and pump motors)	Dip tubes	Dip tubes → WFT-05 → WFR-05 → WFAS-05-1 → WFAL-05-1 (Hi) and WFAL-05-2 (Lo) → WFAS-05-2 → shuts off pump motors → WFAS-05-3 → shuts off agitator motors	105" (Lo) and 122" (Hi) 6" 29"	
		SGR	Specific gravity	—	Dip tubes	Dip tubes → SGT-05 → SGR-05	0.8 - 1.5 sp.gr.	
		FRG	Flow to Tank 0-6	Flow to Tank 0-6	Electronic rotameter	FT-05 → GVT-05-2 → FRG-05 → DOV-05-3	1.5 - 15 g.p.m.	1" DOV N.C. (3/4" plug)
		TR	Temperature	—	Resistance element	TE-05 → GVT-05-1 → TR-05	0 - 60°C.	
		PI	Pressure in coil line	Water flow to coil	Pressure tap	Pressure tap → PT-05-3 → PI-05-1; VS-05 → DOV-05-1 → PI-05-2	0 - 70 p.s.i.g. 0 - 160 p.s.i.g.	1 1/2" DOV N.C. (1 1/4" plug)
		VS	—	Flow from TK-01		VS-05-1 → DOV-05-2		4" DOV N.C. on-off
		VS	—	Flow from 0-03 and 0-04		VS-05-2 → DOV-05-4		2" DOV N.C. on-off
		IM	Solvent flow from Tank Farm to tank	—	Displacement meter	IM-05-1	0 - 50 g.p.m.	
		IM	Solvent flow from Tank Farm to tank	—	Displacement meter	IM-05-2	0 - 50 g.p.m.	
TK-06	ITO Decantor[a]	WFR	Weight factor	—	Dip tubes	Dip tubes → WFT-06 → WFR-06	0 - 75"	
		SGR	Specific gravity	—	Dip tubes	Dip tubes → SGT-06 → SGR-06	0.8 - 1.5 sp.gr.	4" DOV N.C. on-off
		VS	—	Flow to TK-05		VS-06 → DOV-06		
TK-05A	ITO Wash Feed [a]	WFI	Weight factor	—	Dip tubes	Dip tubes → WFT-05A → WFI-05A-1 → WFI-05A-2	0 - 175" 0 - 147.5"	Manometer located at tank
		VS	—	Flow from TK-05A to TK-05		VS-053 → Do valve		2" DOV N.C. on-off
		VS	—	Flow from TK-05A to TK-07		VS-07-1 → Do valve		2" DOV N.C. on-off
TK-07	ITO Tank B[a]	WFR	Weight factor	(Alarm, pump and agitator motors)	Dip tubes	Dip tubes → WFT-07 → WFR-07 → WFAS-07-2 → WFAL-07-1 (Hi) and WFAL-07- (Lo) → WFAS-07-1 → shuts off agitator motors → WFAS-07-3 → shuts off pump motors	0 - 210" 105" (Lo) and 122" (Hi) 29" 6.25"	
		SGR	Specific gravity	—	Dip tubes	Dip tubes → SGT-07 → SGR-07	0.5 - 1.5 sp.gr.	
		PI	Pressure in coil line	Water flow to coil	Pressure tap	Pressure tap → PT-07-3 → PI-07-1; VS-07 → DOV-07-3 → PI-07-2	0 - 70 p.s.i.g. 0 - 160 p.s.i.g.	1 1/2" DOV N.C. (1 1/4" plug)
		FRG	Flow to TK-06	Flow to TK-06	Electronic rotameter	FT-07 → GVT-07-1 → FRG-07 → DOV-07-1	1.5 - 15 g.p.m.	1" DOV N.C. (3/4" plug)
		VS	—	Flow from TK-01 to TK-07		VS-07-3 → DOV-07-4		2" DOV N.C. on-off
		VS	—	Flow from 0-03 and 0-04 to TK-07		VS-07-2 → DOV-07-2		4" DOV N.C. on-off
		TR	Temperature	—	Resistance element	TE-07 → GVT-07-2 → TR-07	0 - 60°C.	
TK-08	ITO Wash Collection[a]	WFR	Weight factor	(Alarm and agitator motor)	Dip tubes	Dip tubes → WFT-08 → WFR-08 → WFAS-08-1 → WFAL-08-1 (Hi) and WFAL-08-2 (Lo) → WFAS-08-2 → shuts off agitator motor	0 - 151" 95" (Lo) and 119" (Hi)	
		SGR	Specific gravity	—	Dip tubes	Dip tubes → SGT-08 → SGR-08	0.5 - 1.5 sp.gr.	
		TR	Temperature	—	Resistance element	TE-08 → GVT-08 → TR-08	0 - 100°C.	
		PI	Pressure in coil line	Water flow to coil	Pressure tap	Pressure tap → PT-08 → PI-08-1; VS-08 → DOV-08 → PI-08-2	0 - 70 p.s.i.g. 0 - 160 p.s.i.g.	1 1/2" DOV N.C. (1 1/4" plug)
TK-R1	20F Tank[b]	Has the same instruments as TK-01 except for equipment piece numbers						
T-R2	20 Contactor[b]	IRG	Interface	20W flow	Dip tubes	Dip tubes → IT-R2 → IRG-R2 → DOV-R2-6	0.833 - 1.25 sp.gr.	
		SGR	Aqueous effluent specific gravity	—	Dip tubes	Dip tubes → SGT-R2-1 → SGR-R2-1	0.8 - 1.5 sp.gr.	
		DPR	Column differential pressure	—	Dip tubes	Dip tubes → DPT-R2 → DPR-R2	0 - 450"	
		FI	Differential pressure across top disengaging section	(Alarm only)	Dip tubes	Dip tubes → PT-R2 → PI-R2-1 → PAS-R2 → PAL-R2	0 - 10.5" 8.8"	
		FI	Pulse leakage flow	—	Flow pot	FE-R2-3 → FI-R2-3	0.1 - 6.0 g.p.m.	Operating Gallery
		FRG	20W flow to top of column	20W flow to top of column	Electronic rotameter	FT-R2-4 → GVT-R2-2 → FRG-R2-2 → DOV-R2-5	2.5 - 25 g.p.m.	1" DOV N.C.
		VS	—	Flow to 0-R3		VS-R2-3 → DOV-R2-7		3" DOV N.C. on-off
		VS	—	Flow to 0-R4		VS-R2-4 → DOV-R2-3		3" DOV N.C. on-off
TK-R2	20W Tank[b]	Has the same instruments as TK-02 except for equipment piece numbers						
0-R3	20 Centrifuge #a[b]	Has the same instruments as 0-03 except for equipment piece numbers						
TK-R3A	(b)	Has the same instruments as TK-03A except for equipment piece numbers						
0-R4	20 Centrifuge #a[b]	Has the same instruments as 0-03 except for equipment piece numbers						
TK-R5	ITO Tank #a[b]	WFR	Weight factor	(Alarm and agitator motors	Dip tubes	Dip tubes → WFT-R5 → WFR-R5 → WFAS-R5-1 → WFAL-R5-1 (Hi) and WFAL-R5-2 (Lo) → WFAS-R5-2 → shuts off agitator motor	0 - 210" 105" (Lo) and 122" (Hi) 36.25	
		SGR	Specific gravity		Dip tubes	Dip tubes → SGT-R5 → SGR-R5	0.8 - 1.5 sp.gr.	

			—	Chemical spray		VS-G3A-1 → DOV-G3A-1		2" DOV N.O. on-off
				Chemical spray		VS-G3A-1 → DOV-G3A-2		2" DOV N.O. on-off
G-G3	IO Centrifuge "A"(a)			Chemical spray		VS-G3A-2 → DOV-G3A-3		2" DOV N.O. on-off
				Chemical spray		VS-G3A-2 → DOV-G3A-4		
		SI	Speed	—		SE-G3 → SS-G3-1 → SI-G3; SS-G3-1 → SR-G3		
		WOBR	Wobble	—		WOBE-G3 → WOBR-G3 → GVT-G3-1 → WOBR-G3		
		WFI	Weight factor	—	Dip tubes	Dip tubes → WFT-G3 → WFI-G3	0 - 35"	
G-G4	IO Centrifuge "B"(a)	Has same instruments as G-G3 except for equipment piece numbers						
TK-G5	ITO Tank "A"(a)	WFR	Weight factor	(Alarm, agitator and pump motors)	Dip tubes	Dip tubes → WFT-G5 → WFR-G5; WFAS-G5-1 → WFAL-G5-1 (Hi) and WFAL-G5-2 (Lo); WFAL-G5-2 → shuts off pump motors; WFAL-G5-3 → shuts off agitator motors	105" (Lo) and 122" (Hi); 6"; 29"	
		SGR	Specific gravity	—	Dip tubes	Dip tubes → SGT-G5 → SGR-G5	0.8 - 1.5 sp.gr.	
		FRG	Flow to Tank G-6	Flow to Tank G-6	Electronic rotameter	FT-G5 → GVT-G5-2 → FRG-G5 → DOV-G5-3	1.5 - 15 g.p.m.	1" DOV N.C. (3/4" plug)
		TR	Temperature	—	Resistance element	TE-G5 → GVT-G5-1 → TR-G5	0 - 60°C.	
		PI	Pressure in coil line	Water flow to coil	Pressure tap	Pressure tap → PT-G5-3 → PI-G5-1; VG-G5 → DOV-G5-1; PI-G5-2	0 - 70 p.s.i.g.; 0 - 160 p.s.i.g.	1 1/2" DOV N.C. (1 1/4" plug)
		VS	—	Flow from TK-G1		VS-G5-1 → DOV-G5-2		4" DOV N.O. on-off
		VS	—	Flow from G-G3 and G-G4		VS-G5-2 → DOV-G5-4		2" DOV N.O. on-off
		IM	Solvent flow from Tank Farm to tank	—	Displacement meter	IM-G5-1	0 - 50 g.p.m.	
		IM	Solvent flow from Tank Farm to tank	—	Displacement meter	IM-G5-2	0 - 50 g.p.m.	
TK-G6	ITO Decanter(a)	WFR	Weight factor	—	Dip tubes	Dip tubes → WFT-G6 → WFR-G6	0 - 75"	
		SGR	Specific gravity	—	Dip tubes	Dip tubes → SGT-G6 → SGR-G6	0.8 - 1.5 sp.gr.	
		VS	—	Flow to TK-G5		VS-G6 → DOV-G6		4" DOV N.C. on-off
TK-G5A	ITO Wash Feed (a)	WFI	Weight factor	—	Dip tubes	Dip tubes → WFT-G5A → WFI-G5A-1; WFI-G5A-2	0 - 175"; 0 - 147.5"	Manometer located at tank
		VS	—	Flow from TK-G5A to TK-G5		VS-G53 → Do valve		2" DOV N.O. on-off
		VS	—	Flow from TK-G5A to TK-G7		VS-G7-1 → Do valve		2" DOV N.C. on-off
TK-G7	ITO Tank B(a)	WFR	Weight factor	(Alarm, pump and agitator motors)	Dip tubes	Dip tubes → WFT-G7 → WFR-G7; WFAS-G7-2 → WFAL-G7-1 (Hi) and WFAL-G7-2 (Lo); WFAS-G7-1 → shuts off agitator motors; WFAS-G7-3 → shuts off pump motors	0 - 210"; 105" (Lo) and 122" (Hi); 29"; 6.25"	
		SGR	Specific gravity	—	Dip tubes	Dip tubes → SGT-G7 → SGR-G7	0.5 - 1.5 sp.gr.	
		PI	Pressure in coil line	Water flow to coil	Pressure tap	Pressure tap → PT-G7-3 → PI-G7-1; VG-G7 → DOV-G7-3; PI-G7-2	0 - 70 p.s.i.g.; 0 - 160 p.s.i.g.	1 1/2" DOV N.C. (1 1/4" plug)
		FRG	Flow to TK-G6	Flow to TK-G6	Electronic rotameter	FT-G7 → GVT-G7-1 → FRG-G7 → DOV-G7-1	1.5 - 15 g.p.m.	1" DOV N.C. (3/4" plug)
		VS	—	Flow from TK-G1 to TK-G7		VS-G7-3 → DOV-G7-4		2" DOV N.C.
		VS	—	Flow from G-G3 and G-G4 to TK-G7		VS-G7-2 → DOV-G7-2		4" DOV N.C. on-off
		TR	Temperature	—	Resistance element	TE-G7 → GVT-G7-2 → TR-G7	0 - 60°C.	
TK-G8	ITO Wash Collection(a)	WFR	Weight factor	(Alarm and agitator motor)	Dip tubes	Dip tubes → WFT-G8 → WFR-G8; WFAS-G8-1 → WFAL-G8-1 (Hi) and WFAL-G8-2 (Lo); WFAS-G8-2 → shuts off agitator motor	0 - 151"; 95" (Lo) and 119" (Hi); 23"	
		SGR	Specific gravity	—	Dip tubes	Dip tubes → SGT-G8 → SGR-G8	0.5 - 1.5 sp.gr.	
		TR	Temperature	—	Resistance element	TE-G8 → GVT-G8 → TR-G8	0 - 100°C.	
		PI	Pressure in coil line	Water flow to coil	Pressure tap	Pressure tap → PT-G8 → PI-G8-1; VG-G8 → DOV-G8; PI-G8-2	0 - 70 p.s.i.g.; 0 - 160 p.s.i.g.	1 1/2" DOV N.C. (1 1/4" plug)
TK-R1	20W Tank(b)	Has the same instruments as TK-G1 except for equipment piece numbers						
T-R2	20 Contactor(b)	IRG	Interface	20W flow	Dip tubes	Dip tubes → IT-R2 → IRG-R2 → DOV-R2-6	0.833 - 1.25 sp.gr.	
		SGR	Aqueous effluent specific gravity	—	Dip tubes	Dip tubes → SGT-R2-1 → SGR-R2-1	0.8 - 1.5 sp.gr.	
		DPR	Column differential pressure	—	Dip tubes	Dip tubes → DPT-R2 → DPR-R2	0 - 450"	
		PI	Differential pressure across top disengaging section	(Alarm only)	Dip tubes	Dip tubes → PT-R2 → PI-R2-1; PAS-R2 → PAL-R2	0 - 10.5"; 8.8"	
		FI	Pulse leakage flow	—	Flow pot	FE-R2-3 → FI-R2-3	0.1 - 6.0 g.p.m.	Operating Gallery
		FRG	20W flow to top of column	20W flow to top of column	Electronic rotameter	FT-R2-4 → GVT-R2-2 → FRG-R2-2 → DOV-R2-5	2.5 - 25 g.p.m.	1" DOV N.C.
		VS	—	Flow to G-R3		VS-R2-3 → DOV-R2-7		3" DOV N.C. on-off
		VS	—	Flow to G-R4		VS-R2-4 → DOV-R2-3		3" DOV N.O. on-off
TK-R2	20W Tank(b)	Has the same instruments as TK-G2 except for equipment piece numbers						
G-R3	20 Centrifuge "A"(b)	Has the same instruments as G-G3 except for equipment piece numbers						
TK-R3A	(b)	Has the same instruments as TK-G3A except for equipment piece numbers						
G-R4	20 Centrifuge "B"(b)	Has the same instruments as G-G3 except for equipment piece numbers						
TK-R5	2TO Tank "A"(b)	WFR	Weight factor	(Alarm and agitator motors	Dip tubes	Dip tubes → WFT-R5 → WFR-R5; WFAS-R5-1 → WFAL-R5-1 (Hi) and WFAL-R5-2 (Lo); WFAS-R5-2 → shuts off agitator motor	0 - 210"; 105" (Lo) and 122" (Hi); 35.25	
		SGR	Specific gravity	—	Dip tubes	Dip tubes → SGT-R5 → SGR-R5	0.8 - 1.5 sp.gr.	
		TR	Temperature	—	Resistance element	TE-R5 → GVT-R5 → TR-R5	0 - 60°C.	
		VS	—	Flow from G-G3 and G-G4 to TK-R7		VS-R5-1 → DOV-R7-5		3" DOV N.C. on-off
				Flow from G-G3 and G-G4 to TK-R5		→ DOV-R5-3		3" DOV N.C. on-off
		VS	—	Flow from TK-324 to TK-R7		VS-R5-2 → DOV-R7-3		3" DOV N.C. on-off
				Flow from TK-324 to TK-R5		→ DOV-R5-2		3" DOV N.C. on-off
		VS	—	Flow to F-R5 and F-R5-2		VS-R5-3 → DOV-R5-5		3" DOV N.O. on-off
				Flow to F-R5-3 and F-R5-4		→ DOV-R5-6		3" DOV N.C. on-off
		PI	Pressure in coil line	Water flow to coil	Pressure tap	Pressure tap → PT-R5 → PI-R5-1; VG-R5 → DOV-R5; PI-R5-2	0 - 70 p.s.i.g.; 0 - 160 p.s.i.g.	1 1/2" DOV N.O. (1 1/4" plug)
		VS	—	Flow from TK-R5-A to TK-R5		VS-R5-3 → Do valve		
		VS	—	Flow from TK-R6 to TK-R5		VS-R5-4 → DOV-R5-4		4" DOV N.O. on-off
		IM	Solvent flow from Tank Farm to Tank	—	Displacement meter	IM-R5-1	0 - 50 g.p.m.	
		IM	Solvent flow from Tank Farm to Tank	—	Displacement meter	IM-R5-2	0 - 50 g.p.m.	
TK-R6	2TO Decanter(b)	WFR	Weight factor	—	Dip tubes	Dip tubes → WFT-R6 → WFR-R6	0 - 75.4"	
		SGR	Specific gravity	—	Dip tubes	Dip tubes → SGT-R6 → SGR-R6	0.8 - 1.5 sp.gr.	
		FRG	Flow from TK-R5 and TK-R7 to TK-R6	Flow from TK-R5 and TK-R7 to TK-R6	Electronic rotameter	FT-R6 → GVT-R6 → FRG-R6 → DOV-R6	1.5 - 15.0 g.p.m.	1" DOV N.C. (3/4" plug)
		VS	—	Flow from TK-R6 to G-R3		VS-R3-3 → DOV-R3-3		2" DOV N.O. on-off
TK-R1A	Solvent Blend Tank(b)	FI	TBP flow from Tank Farm	TBP flow from Tank Farm	Pneumatic rotameter	FT-R1A-1 → AFF-R1A; VG-R1A → DOV-R1A-1	1.0 - 20.0 g.p.m.	1 1/2" DOV N.O. (1 1/4" plug). Resets diluent flow from Tank Farm
		FRG	Diluent flow from Tank Farm	Diluent flow from Tank Farm	Pneumatic rotameter	FT-R1A-2 → FRG-R1A → DOV-R1A-2	1.0 - 10.0 g.p.m.	1" DOV N.C. (3/2" plug). Reset by TBP flow from Tank Farm
		WFI	Weight factor	—	Dip tubes	Dip tubes → WFT-R1A → WFI-R1A-1; WFI-R1A-2	0 - 120"; 0 - 88.5"	Manometer located at tank.
TK-R3A	20 Wash Tank(b)	WFI	Weight factor	—	Dip tubes	Dip tubes → WFT-R3A → WFI-R3A-1; WFI-R3A-2	0 - 175"; 0 - 147.5"	Manometer located at tank
TK-R7	2TO Tank "B"(b)	WFR	Weight factor	(Alarm and agitator motor	Dip tubes	Dip tubes → WFT-R7 → WFR-R7; WFAS-R7-1 → WFAL-R7-1 (Hi) and WFAL-R7-2 (Lo); WFAS-R7-2 → shuts off agitator motor	0 - 210"; 105" (Lo) and 122" (Hi); 32.2"	
		SGR	Specific gravity	—	Dip tubes	Dip tubes → SGT-R7 → SGR-R7	0.8 - 1.5 sp.gr.	
		TR	Temperature	—	Resistance element	TE-R7 → GVT-R7 → TR-R7	0 - 60°C.	
		PI	Pressure in coil line	Water flow to coil	Pressure tap	Pressure tap → PT-R7 → PI-R7-1; VG-R7 → DOV-R7-4; PI-R7-2	0 - 70 p.s.i.g.; 0 - 160 p.s.i.g.	1 1/2" DOV N.O. (1 1/4" plug)
		VS	—	Flow from TK-R3A to TK-R7		VS-R7-1 → Do valve		2" Do valve N.O. on-off
		VS	—	Flow from TK-R7 P-R5-3 and P-R5-4		VS-R7-2 → DOV-R7-1		3" DOV N.O. on-off
				Flow from TK-R7 to P-R5-1 and P-R5-2		→ DOV-R7-2		3" DOV N.O. on-off
TK-R8	2TO Wash Collection Tank(b)	WFR	Weight factor	(Alarm and agitator motor)	Dip tubes	Dip tubes → WFT-R8 → WFR-R8; WFAS-R8-1 → WFAL-R8-1 (Hi) and WFAL-R8-2 (Lo); WFAS-R8-2 → shuts off agitator motor	0 - 151"; 95" (Lo) and 119" (Hi); 23"	
		SGR	Specific gravity	—	Dip tubes	Dip tubes → SGT-R8 → SGR-R8	0.8 - 1.5 sp.gr.	
		TR	Temperature	—	Resistance element	TE-R8 → GVT-R8 → TR-R8	0 - 100°C.	
		PI	Pressure in coil line	Water flow to coil	Pressure tap	Pressure tap → PT-R8 → PI-R8-1; VG-R8 → DOV-R8; PI-R8-2	0 - 70 p.s.i.g.; 0 - 160 p.s.i.g.	1 1/2" DOV N.C. (1 1/4" plug)

NOTES: (a) All receiving instruments are on the Central Graphic Panel except where otherwise noted.
(b) All receiving instruments are on the Central Auxiliary Panel except where otherwise noted.

TABLE XVII-B

ACID RECOVERY AND WASTE DISPOSAL INSTRUMENTS

Equipment Served No.	Equipment Served Name	Inst. Symbol	Variable Sensed	Variable Controlled	Type of Sensing Element	Signal Flow	Range	Remarks
T-F2	Vent Reactor including E-F2 Vent Header(a)	FR	Gas flow from T-F2 to F-F1	—	Orifice	FR-F2-1←FT-F2-1←FE-F2	0 - 1100 SCFM (at 10")	
		TR	Temperature of gas outlet	(Alarm only)	Resistance element	TE-F2←CVT-F2←TR-F2; ←TAH-F2←TAL-F2 (lo)	0 - 300°C. 9 p.s.i.g.	
		FI	Steam flow to E-F2	Steam flow to E-F2	Orifice	FE-F2-2 FT-F2-1 FI-F2; TE-F2 Do valve to E-F2	0 - 400 lbs./hr. (at 50")	
		PI	Pressure in line	—	Pressure tap	PT-F2 PI-F2	0 - 300 p.s.i.g.	
		DPI	Differential pressure across reactor	—	Dip tubes	Dip tubes←DPT-F2←DPI-F2	0 - 10"	
E-F1	Vent Condenser including F-F1 Vent Filter(a)	TR	Temperature of cooling water outlet	—	Resistance element	TE-F1-1←CVT-F1-1←TR-F1	0 - 100°C.	
		TRC	Temperature of gas flow from E-F1	Water flow to condenser	Resistance element	TE-F1-2←CVT-F1-2←TRC-F1; DCV-F1-5	0 - 120°C.	
		FI	Water flow to condenser	—	Orifice	FE-F1←FT-F1←FI-F1	0 - 240 g.p.m. (at 100")	3" DCV N.O.
		DPI	Differential pressure across filter	—	Dip tubes	Dip tubes←DPT-F1-2←DPI-F1-2	0 - 13"	
		DPI	Differential pressure across condenser	—	Dip tubes	Dip tubes←DPT-F1-1←DPI-F1-1	0 - 20"	
		PRC	Pressure in condenser vent header	Pressure in condenser vent header	Pressure tap	See Figure XVII-14 for details of system		
		PRC	Pressure in vessel vent header	Pressure in vessel vent header	Pressure tap			
TK-F3	HNO3 Sample Tank (a)	TR	Temperature	—	Resistance element	TE-F3←CVT-F3←TR-F3	0 - 100°C.	
		WFR	Weight factor	(Alarm and agitator motor)	Dip tubes	Dip tubes←WFT-F3←WFR-F3; ←WFAH-F3-1←WFAL-F3-1 (hi) and WFAL-F3-2 (lo); ←WFAS-F3-2←shuts off agitator motor	0 - 152" 109" (lo) and 136" (hi) 23"	
		SGR	Specific gravity	—	Dip tubes	Dip tubes←SGT-F3←SGR-F3	1.0 - 1.5 sp.gr.	
		PI	Pressure in coil line	Water flow to coil	Pressure tap	Pressure tap←PT-F3←PI-F3-1; YC-F3-1←DCV-F3-2; ←PI-F3-2	0 - 70 p.s.i.g. 0 - 160 p.s.i.g.	1 1/2" DCV N.O. (1 1/4" plug) Operating gallery
		FI	Demineralized water flow to tank	Demineralized water flow to tank	Orifice	FE-F3←FT-F3←FI-F3; YC-F3-2←DCV-F3-1	0 - 21 g.p.m. (at 100")	1 1/2" DCV N.O. (1 1/4" plug)
TK-F4	HNO3 Receiver	TR	Temperature	—	Resistance element	TE-F4←CVT-F4←TR-F4	0 - 120°C.	
		WFR	Weight factor	(Alarm and agitator motor)	Dip tubes	Dip tubes←WFT-F4←WFR-F4; ←WFAH-F4-1←WFAL-F4-1 (hi) and WFAL-F4-2 (lo); ←WFAS-F4-2←shuts off agitator motor	0 - 154" 109" (lo) and 136" (hi) 23"	
		SGR	Specific gravity	—	Dip tubes	Dip tubes←SGT-F4←SGR-F4	1.0 - 1.5 sp.gr.	
		PI	Pressure in coil line	Water flow to coil	Pressure tap	Pressure tap←PT-F4←PI-F4-1; YC-F4←DCV-F4; ←PI-F4-2	0 - 70 p.s.i.g. 0 - 160 p.s.i.g.	1 1/2" DCV N.O. (1 1/4" plug) Operating gallery
T-F5	HNO3 Fractionator system(a)	FRC	Steam flow to chest	Steam flow to chest	Orifice	See Figure XVII-11 for details of system; FE-F5-1←DCV-F5-5; TS-F5-2←DCV-F5-4; TS-F5-3←DCV-F5-3		1/2" DCV N.C. on-off
		YS	—	Flow to TK-F3				
		TR	Temperature of bottoms	—	Resistance element	TE-F5-1←CVT-F5-1←TR-F5-1	0 - 150°C.	
		WFR	Weight factor	(Alarm only)	Dip tubes	Dip tubes←WFT-F5-2←WFR-F5; ←WFAH-F5←WFAL-F5-1 (hi) and WFAL-F5-2 (lo)	0 - 152" 137" (lo) and 166" (hi)	
		SGRC	Specific gravity	Steam flow to chest	Dip tubes	Dip tubes←SGT-F5-1←SGRC-F5←Resets FRC-F5; ←SGT-F5-2←SGR-F5	1.35 - 1.60 sp.gr. 1.0 - 1.5 sp.gr.	Dip tube spacing is 40" Dip tube spacing is 40"
		TR	Temperature of vapor	—	Resistance element	TE-F5-2←CVT-F5-2←TR-F5-2	0 - 150°C.	
		TR	Temperature of cooling water outlet	—	Resistance element	TE-F5-3←CVT-F5-3←TR-F5-3	0 - 100°C.	
		TR	Temperature of condensate	—	Resistance element	TE-F5-4←CVT-F5-4←TR-F5-4	0 - 120°C.	
		FR	Flow of condensate	—	Electronic rotameter	FT-F5-3←CVT-F5-3←FR-F5	5.0 - 50.0 g.p.m.	
		FI	Water flow to condenser	Water flow to condenser	Orifice	FE-F5-1←FT-F5-1←FI-F5; YC-F5←DCV-F5-1	0 - 700 g.p.m. (at 100")	4" DCV N.O.
		WFI	Weight factor in seal pot	—	Dip tubes	Dip tubes←WFT-F5-1←WFI-F5	0 - 36"	
		YS	—	Seal pot water flow		YS-F5-4←Do Valve		1" Do valve N.C. on-off
		DPI	Differential pressure across tubes	—	Dip tubes	Dip tubes←DPT-F5-1←DPI-F5-1	0 - 25"	
		PI	Pot pressure	—	Dip tubes	Dip tubes←PT-F5←PI-F5-1	0 - 45"	
		DPI	Differential pressure across tower	—	Dip tubes	Dip tubes←DPT-F5-2←DPI-F5-2	0 - 35"	
		RR	Gamma of condensate to crib	—	Scintillation element	SCE-F5←RC-F5←CVT-F5-6←RR-F5		
E-F6	F2 Acid Concentrator system(a)	FRC	Steam flow to chest	Steam flow to chest	Orifice	See Figure XVII-10 for details of concentrator safety devices		
		WFR	Weight factor	Shuts off steam flow to chest	Dip tubes			
		TR	Temperature of concentrator effluent	Shuts off steam flow to chest	Resistance element			
		FRC	Flow to TK-F7	Resets steam flow to chest	Electronic rotameter	FT-F6←FRC-F6-2←Resets FRC-F6-3; ←Resets FRC-F6-4	0.19 - 1.9 g.p.m.	
		SGR	Specific gravity	—	Dip tubes	Dip tubes←SGT-F6←SGR-F6	1.0 - 1.25 sp.gr.	Dip tube spacing is 40".
		DPI	Differential pressure	—	Dip tubes	Dip tubes←DPT-F6←DPI-F6	0 - 10"	
		WFI	Weight factor in seal pot	—	Dip tubes	Dip tubes←WFT-F6-2←WFI-F6	0 - 36"	
		YS	—	Water flow to seal pot		YS-F6←Do valve		1" Do valve N.C. on-off Central auxiliary panel
		RR	Pot radiation	—	Ion chamber	RE-F6←RC-F6←RA-F6←RR-F6		
TK-F7	Acid Recycle Tank (a)	TR	Temperature	—	Resistance element	TE-F7←CVT-F7-2←TR-F7	0 - 100°C.	
		WFRC	Weight factor	Resets flow to E-F11-1 (Alarm, pump and agitator motors)	Dip tubes	Dip tubes←WFT-F7←WFRC-F7←Resets FRC-F7-1; ←WFAS-F7-1←WFAL-F7-1 (hi) and WFAL-F7-2 (lo); ←WFAS-F7-2←shuts off pump and agitator motors	0 - 126" 86" (lo) and 108" (hi) 6.25", pump and 21", agit.	
		SGR	Specific gravity	—	Dip tubes	Dip tubes←SGT-F7←SGR-F7	1.0 - 1.3 sp.gr.	
		FRC	Flow to E-F11-1	Flow to E-F11-1	Electronic rotameter	FT-F7-3←CVT-F7-1←FRC-F7-1←DCV-F7-3	1.7 - 17.0 g.p.m.	1" DCV N.C. (3/4" plug). Reset by weight factor
		FI	Steam, water and air flow to coil	Steam, water and air flow to coil	Orifice	See Figure XVII-15 for details of system		
		FRC	Demineralized water flow to tank	Demineralized water flow to tank	Orifice	FE-F7-3←FT-F7-4←FRC-F7-2←DCV-F7-4	0 - 21 g.p.m. (at 100")	1 1/2" DCV N.O.
TK-F8	Waste Rework Tank (b)	FI	Steam, water and air flow to coil	Steam, water and air flow to coil	Orifice	See Figure XVII-12 for details of system		
		WFR	Weight factor	Shuts off steam flow to coil	Dip tubes			
		TR	Pot temperature	Shuts off steam flow to coil	Resistance element			
		SGR	Specific gravity	—	Dip tubes	Dip tubes←SGT-F8←SGR-F8	1.0 - 1.6 sp.gr.	
		PI	Pressure in sparger line	Pressure in sparger line	Pressure tap	Pressure tap←PT-F8←PI-F8-2; YC-F8-4←DCV-F8-4	0 - 70 p.s.i.g.	4" DCV N.C.
		YC	—	Flow of chemicals to tank		YC-F8-3←DCV-F8-3		2" DCV N.C.
TK-F10	Acid Accumulator and E-F9 Reflux Condenser(a)	TR	Temperature	—	Resistance element	TE-F10←CVT-F10-1←TR-F10	0 - 100°C.	
		WFRC	Weight factor	Resets flow to E-F6 (Alarm, pump, and agitator motors)	Dip tubes	Dip tubes←WFT-F10←WFRC-F10←Resets FRC-F10-2; ←WFAS-F10-1←WFAL-F10-1 (hi) and WFAL-F10-2 (lo); ←WFAS-F10-2←shuts off pump and agitator motors	0 - 119" 84" (lo) and 106" (hi) 5.5", pump and 16", agit.	
		FRC	Flow to E-F6	Flow to E-F6	Electronic rotameter	FT-F10-4←CVT-F10-2←FRC-F10-2←DCV-F10-4	5.0 - 50.0 g.p.m.	1" DCV N.C. Reset by weight factor
		FRC	Demineralized water flow to tank	Demineralized water flow to tank	Orifice	FE-F10-3←FT-F10-3←FRC-F10-3←DCV-F10-3	0 - 21 g.p.m. (at 100")	1 1/2" DCV N.C.
		FI	Steam, water and air flow to coil	Steam, water and air flow to coil	Orifice	See Figure XVII- for details of system		
		TR	Temperature of condenser water outlet	—	Resistance element	TE-F9←CVT-F9←TR-F9	0 - 100°C.	Head end auxiliary panel
		FI	Water flow to condenser	Water flow to condenser	Orifice	FE-F9←FT-F9←FI-F9; YC-F9←DCV-F9-1	0 - 200 g.p.m. (at 100")	3" DCV N.O. (2 1/2" plug) Head end auxiliary panel
		YS	—	Condensate flow to TK-F8		YS-F9←DCV-F9-2		2" DCV N.O. on-off. Head end auxiliary panel
E-F11-1	F1 Acid Concentrator System(a)	FRC	Steam flow to chest	Steam flow to chest	Orifice	See Figure XVII-10 for details of concentrator safety devices		
		WFR	Weight factor	Shuts off steam flow to chest	Dip tubes			
		TR	Temperature of concentrator effluent	Shuts off steam flow to chest	Resistance element			
		SGR	Specific gravity	—	Dip tubes	Dip tubes←SGT-F11←SGR-F11	1.0 - 1.27 sp.gr.	Dip tube spacing is 40"
		DPI	Differential pressure	—	Dip tubes	Dip tubes←DPT-F11←DPI-F11	0 - 20"	
		TR	Temperature of condenser water outlet	—	Resistance element	TE-F11-1←CVT-F11-1←TR-F11-1	0 - 100°C.	
		TR	Temperature of condensate	—	Resistance element	TE-F11-2←CVT-F11-2←TR-F11-2	0 - 120°C.	
		FI	Water flow to condenser	Water flow to condenser	Orifice	FE-F11-2←FT-F11-2 FI-F11; YC-F11 DCV-F11-2	0 - 400 g.p.m. (at 100")	
		WFI	Weight factor in seal pot	—	Dip tubes	Dip tubes←WFT-F11-1←WFI-F11	0 - 36"	
		YS	—	Water flow to seal pot		YS-F11←Do valve		1" Do valve N.C. on-off Central auxiliary panel
		RR	Pot radiation	—	Ion chamber	RE-F11←RC-F6←RA-F6←RR-F6		
		FRC	Flow to concentrate receiver	Flow to concentrate receiver	Electronic rotameter	FT-F11-3←CVT-F11-4←FRC-F11-2←Resets FRC-F11-1; ←Resets FRC-F11-3	0.19 - 1.9 g.p.m.	
TK-F12	Concentrate Receiver for F1 Acid Concentrator(a)	WFR	Weight factor	(Alarm and agitator motor)	Dip tubes	Dip tubes←WFT-F12←WFR-F12; ←WFAS-F12-1←WFAL-F12-1 (hi) and WFAL-F12-2 (lo); ←WFAS-F12-2←shuts off agitator motor	0 - 138" 98" (lo) and 123" (hi) 21"	
		SGR	Specific gravity	—	Dip tubes	Dip tubes←SGT-F12←SGR-F12	1.0 - 1.5 sp.gr.	
		TR	Temperature	—	Resistance element	TE-F12←CVT-F12←TR-F12	0 - 120°C.	
		PI	Pressure in coil line	Water flow to coil	Pressure tap	Pressure tap←PT-F12←PI-F12-1; YC-F12←DCV-F12; ←PI-F12-2	0 - 70 p.s.i.g. 0 - 160 p.s.i.g.	1 1/2" DCV N.C. (1 1/4" plug) Operating gallery
TK-F15	Concentrate Sample Tank(a)		Has the same instruments as TK-F12 except for equipment piece numbers					
TK-F16	Neutralizer(a)	WFR	Weight factor	(Alarm and agitator motor)	Dip tubes	Dip tubes←WFT-F16←WFR-F16; ←WFAS-F16-1←WFAL-F16-1 (hi) and WFAL-F16-2 (lo); ←WFAS-F16-2←shuts off agitator motor	0 - 161" 93" (lo) and 116" (hi) 26"	
		SGR	Specific gravity	—	Dip tubes	Dip tubes←SGT-F16←SGR-F16	1.0 - 1.6 sp.gr.	
		PI	Pressure in coil line	Water flow to coil	Pressure tap	Pressure tap←PT-F16←PI-F16-1; YC-F16-2←DCV-F16-2; ←PI-F16-2	0 - 70 p.s.i.g. 0 - 160 p.s.i.g.	1 1/2" DCV N.C. (1 1/4" plug) Operating gallery
		pHR	pH	—	Glass and calomel electrodes	pHE-F16 pHA-F16 CVT-F16-1 pHR-F16	6 - 13 pH	
		RR	Pot radiation	—	Ion chamber	RE-F16←RC-F6←RA-F6←RR-F6		
		YC	—	Flow of NaOH to tank		YC-F16-1←DCV-F16-1		1 1/2" DCV N.C.
		TR	Temperature	—	Resistance element	TE-F16←CVT-F16-2←TR-F16	0 - 100°C.	
TK-F18	Cell Drain Collection tank	WFR	Weight factor	(Alarm and agitator motor)	Dip tubes	Dip tubes←WFT-F18←WFR-F18; ←WFAS-F18-1←WFAL-F18-1 (hi) and WFAL-F18-2 (lo); ←WFAS-F18-2←shuts off agitator motor	0 - 181" 66" (lo) and 83" (hi) 26"	
		SGR	Specific gravity	—	Dip tubes	Dip tubes←SGT-F18←SGR-F18	0.8 - 1.7 sp.gr.	
		PI	Pressure in coil line	Water flow to coil	Pressure tap	Pressure tap←PT-F18←PI-F18-1; YC-F18-2←DCV-F18-2; ←PI-F18-2	0 - 70 p.s.i.g. 0 - 160 p.s.i.g.	1 1/2" DCV N.C. (1 1/4" plug) Operating gallery
		TR	Temperature	—	Resistance element	TE-F18←CVT-F18←TR-F18	0 - 100°C.	
		YC	—	Flow of NaOH to tank		YC-F18-1←DCV-F18-1		2" DCV N.C.
TK-U1	Recovered Acid Storage Tank "A" (b)	WFR	Weight factor	(Alarm, pumps and agitator motors)	Dip tubes	Dip tubes←WFT-U1←WFR-U1; ←WFI-U1; ←WFAS-U1-1←WFAL-U1-1 (hi) and WFAL-U1-2 (lo); ←WFAS-U1-2←shuts off pumps and agitator motors	0 - 230" 171" (lo) and 199" (hi) 7", pump and 32", agit.	Central auxiliary panel
		SGR	Specific gravity	—	Dip tubes	Dip tubes←SGT-U1←SGR-U1	1.0 - 1.5 sp.gr.	
		TR	Temperature	—	Resistance element	TE-U1←CVT-U1←TR-U1	0 - 100°C.	
		YC	—	Demineralized water flow to tank		YC-U1-2←DCV-U1-2		2" DCV N.C.
		YS	—	Flow from TK-F3 to TK-U1		YS-U1←DCV-U1-3		2" DCV N.C. on-off
		DCV	—	Flow from TK-F3 to TK-U2		←DCV-U2-3		2" DCV N.C. on-off
		YC	—	Flow of nitric acid to tank		YC-U1-1←DCV-U1-1		2" DCV N.C.
TK-U2	Recovered Acid Storage Tank "B" (b)	WFR	Weight factor	(Alarm, pumps and agitator motors)	Dip tubes	Dip tubes←WFT-U2←WFR-U2; ←WFI-U2; ←WFAS-U2-1←WFAL-U2-1 (hi) and WFAL-U2-2 (lo); ←WFAS-U2-2←shuts off pumps and agitator motors	0 - 230" 171" (lo) and 199" (hi) 7", pump and 32", agit.	Central auxiliary panel
		SGR	Specific gravity	—	Dip tubes	Dip tubes←SGT-U2←SGR-U2	1.0 - 1.5 sp.gr.	
		TR	Temperature	—	Resistance element	TE-U2←CVT-U2←TR-U2	0 - 100°C.	
		YC	—	Demineralized water flow to tank		YC-U2-2←DCV-U2-2		2" DCV N.C.
		YC	—	Flow of nitric acid to tank		YC-U2-1←DCV-U2-1		2" DCV N.C.
		PI	Pressure in vessel	—	Dip tubes	Dip tubes←PT-U2←PI-U2	0 - 10"	
TK-U3 (c)	Laboratory Crib Waste Storage(b)	WFR	Weight factor	(Alarm and agitator motor)	Dip tubes	Dip tubes←WFT-U3←WFR-U3; ←WFAS-U3-1←WFAL-U3-1 (hi) and WFAL-U3-2 (lo); ←WFAS-U3-2←shuts off agitator motor	0 - 258" 150" (lo) and 174" (hi) 28"	
		SGR	Specific gravity	—	Dip tubes	Dip tubes←SGT-U3←SGR-U3	0.8 - 2.0 sp.gr.	
		TR	Temperature	—	Resistance element	TE-U3←CVT-U3←TR-U3	0 - 60°C.	
TK-U4	Laboratory Crib Waste Storage(b)	SGT	Specific gravity	—	Dip tubes	Dip tubes←SGT-U4←SGR-U4	0.8 - 2.0 sp.gr.	
		YS	—	Flow from laboratory to TK-U3 Flow from laboratory to TK-U4		YS-U4←DCV-U3; ←DCV-U4		2" DCV N.C. on-off 2" DCV N.C. on-off
		WFR	Weight factor	(Alarm and agitator motor)	Dip tubes	Dip tubes←WFT-U4←WFR-U4; ←WFAS-U4-1←WFAL-U4-1 (hi) and WFAL-U4-2 (lo); ←WFAS-U4-2←shuts off agitator motor	0 - 258" 150" (lo) and 174" (hi) 28"	
		TR	Temperature	—	Resistance element	TE-U4←CVT-U4←TR-U4	0 - 60°C.	
TK-K1	Decontamination Cell Tank	WFR	Weight factor	(Alarm only)	Dip tubes	Dip tubes←WFT-K1-1; ←WFAS-K1←RL-K1-1←WFAL-K1-1 (hi) and WFAL-K1-3 (hi); ←RL-K1-2←WFAL-K1-2 (lo) and WFAL-K1-4 (lo)	0 - 326.4" 50" (lo) and 290" (hi)	Manometer local panel; WFAL-K1-1 and 2 central auxiliary panel. WFAL-K1-3 and 4 local panel
		TR	Temperature	—	Resistance element	TE-K1←CVT-K1←TR-K1	0 - 150°C.	Local panel
		FI	Flow from TK-K1A through J-K1-1 to TK-K1	—	Indicating rotameter	FI-F2	7.5 - 75.0 g.p.m.	Operating gallery
TK-K1A		WFI	Weight factor	—	Dip tubes	Dip tubes←WFI-K1A	0 - 118"	Manometer local panel
TK-K2	Hot Shop Tank	WFI	Weight factor	(Alarm only)	Dip tubes	Dip tubes←WFT-K2←WFI-K2; ←WFAS-K2←RL-K2-1←WFAL-K2-1 (hi) and WFAL-K2-3 (hi); ←RL-K2-2←WFAL-K2-2 (lo) and WFAL-K2-4 (lo)	0 - 250" 50" (lo) and 218" (hi)	Local panel; WFAL-K2-1 and 2 local panel. WFAL-K2-3 and 4 central auxiliary panel
		TR	Temperature	—	Resistance element	TE-K2←CVT-K2←TR-K2	0 - 100°C.	

NOTES: (a) All instruments are located on the Central Graphic Panel except where otherwise noted.
(b) All instruments are located on the Head End Auxiliary Panel except where otherwise noted.

TABLE XVII-10

REFERENCES TO DETAIL INSTRUMENT INFORMATION

Reference No.	Instrument Symbol	Service	Mark No.(a)	Instrument Data Sheet No.(b)	Blueprint File (BPF) No.
9		Graphic panel		1 through 83	8404(c)
10	FT	Electronic rotameter		45	8404(c)
11	FT	Pneumatic transmitting rotameter	5J-A	86	8090
12	FE	Orifice plates	1A-A	223	8559
13	FE	Orifice plates	1A-A	233	8629
14	FE	Orifice plates	1A-A	234	8492
15	FE	Orifice plates	1A-A	147	8303
16	FE	Orifice flanges	1A-B	224	8325
17	FE	Orifice flanges	1A-B	235	8322
18	FE	Orifice flanges	1A-B	236	8321
19	FE	Orifice flanges	1A-B	90	7963
20	FE	Calibrated flow units	1A-C	155, 156, 157, 158, 159	8320
21	MP	Metering pump	8A-A	191	8384
22	DM	Displacement meter	2C-A	84	8086
23	DM	Displacement meter	2C-B	85	8086
24	R	Purge rotameters	2B-B	102	7709
25	LE	Conductivity electrodes	1M-A	213	8534
26	LAS	Conductivity electrode alarm	6G-B	214	8534
27	PI	Pressure Bourdon gages	2J-B	172, 173, 174	8641
28	TE	Temperature resistance element	1E-A	104	8154
29	TE	Temperature resistance element	1E-A	110	1980
30	TI/TE	Mercury-bulb temperature indicator	2L-B	167, 168	8119
31	TI/TE	Mercury-bulb temperature indicator	2L-B	226	8409
32	TI/TE	Mercury-bulb temperature indicator	2L-B	227	8478
33	RE	Ionization chambers	1J-A	144	8507
34	RE	Ionization chambers	1J-B	145	8507
35	MK	Microphones	1L-A	153	2744
36	SGT, IT, DPT	Pneumatic pressure transmitter	5C-F	179	8316
37	FT	Pneumatic pressure transmitter	5C-B	164	8318
38	WFT	Pneumatic pressure transmitter	5C-A	140	8123
39	WFT	Pneumatic pressure transmitter	5C-A	146	8096
40	DPT, PT	Pneumatic pressure transmitter	5C-A	129	8123
41	FT	Pneumatic pressure transmitter	5C-A	148	8124
42	PT	Pneumatic pressure transmitter	5C-E	166	8555
43	PT	Pneumatic pressure transmitter	5C-D	151	8122
44	RA	Radiation amplifier	5B-B	142	8403
45	RS	Radiation selector switch	6B-A	143	8403
46	pHA	pH amplifier	5B-A	126	8639
47	CVT	Electric-to-pneumatic converter		41, 42, 43, 44, 46	8404(c)
48	FI	Flow indicator (gage)	2J-B	109	7803
49	WFI	Weight-factor indicator (gage)	2J-A	111	7872
50	DPI	Differential-pressure indicator (gage)	2J-C	108	7871
51	WFI	Weight-factor indicator (manometer)	2E-B	93	7831
52	WFI	Weight-factor indicator (manometer)	2E-B	113 and 114	7832
53	WFI	Weight-factor indicator (micromanometer)	2E-D	141	7925
54	SGI, WFI, PI	Pressure indicator (manometer)	2E-A	92	7832
55	PI	Pressure indicator (gage)	2J-D	170	8066
56	PI	Pressure indicator (gage)	2J-E	171	8066
57	WFIC, PIC	Miniature Foxboro indicator-controller	4D-D	98	7802
58	WFIC	Miniature Foxboro indicator-controller	4D-D	119	7799
59	WFR, DPR, SGR, FR, TR, RR, pHR	Miniature recorders		23, 24, 25, 26, 27, 28	8404(c)
60	RR	Standard strip-chart recorders	3C-A	87	7995
61	CRR	Standard strip-chart recorders	3C-A	125	8068
62	FRC, IRS, WFRC, SGRC, TRC, PRC	Miniature recorder-controller		31, 32, 33, 34, 35, 36, 37	8404(c)
63	FIX	Pneumatic integrators		14, 15, 16	8404(c)
64	FX	Electric integrators		17	8404(c)
65	VC	Manual controllers		79	8404(c)
66	TRV/TE	Temperature-regulating valve	7H-A	186, 187	8504
67	TRV/TE	Temperature-regulating valve	7H-A	188	8531
68	ASP	Adjuster, set pointer		82	8404(c)
69	DOV	Hammel-Dahl throttling valve	7A-E	201	8700
70	DOV	Hammel-Dahl on-off valve	7A-F	203	8700
71	DOV	Hammel-Dahl on-off valve	7A-G	[illegible]	[illegible]

25	LE	Conductivity electrodes	1M-A	213	8534
26	LAS	Conductivity electrode alarm	6G-B	214	8534
27	PI	Pressure Bourdon gages	2J-B	172, 173, 174	8641
28	TE	Temperature resistance element	1E-A	104	8154
29	TE	Temperature resistance element	1E-A	110	1980
30	TI/TE	Mercury-bulb temperature indicator	2L-B	167, 168	8119
31	TI/TE	Mercury-bulb temperature indicator	2L-B	226	8409
32	TI/TE	Mercury-bulb temperature indicator	2L-B	227	8478
33	RE	Ionization chambers	1J-A	144	8507
34	RE	Ionization chambers	1J-B	145	8507
35	MK	Microphones	1L-A	153	2744
36	SGT, IT, DPT	Pneumatic pressure transmitter	5C-F	179	8316
37	FT	Pneumatic pressure transmitter	5C-B	164	8318
38	WFT	Pneumatic pressure transmitter	5C-A	140	8123
39	WFT	Pneumatic pressure transmitter	5C-A	146	8096
40	DPT, PT	Pneumatic pressure transmitter	5C-A	129	8123
41	FT	Pneumatic pressure transmitter	5C-A	148	8124
42	PT	Pneumatic pressure transmitter	5C-E	166	8555
43	PT	Pneumatic pressure transmitter	5C-D	151	8122
44	RA	Radiation amplifier	5B-B	142	8403
45	RS	Radiation selector switch	6B-A	143	8403
46	pHA	pH amplifier	5B-A	126	8639
47	CVT	Electric-to-pneumatic converter		41, 42, 43, 44, 46	8404(c)
48	FI	Flow indicator (gage)	2J-B	109	7803
49	WFI	Weight-factor indicator (gage)	2J-A	111	7872
50	DPI	Differential-pressure indicator (gage)	2J-C	108	7871
51	WFI	Weight-factor indicator (manometer)	2E-B	93	7831
52	WFI	Weight-factor indicator (manometer)	2E-B	113 and 114	7832
53	WFI	Weight-factor indicator (micromanometer)	2E-D	141	7925
54	SGI, WFI, PI	Pressure indicator (manometer)	2E-A	92	7832
55	PI	Pressure indicator (gage)	2J-D	170	8066
56	PI	Pressure indicator (gage)	2J-E	171	8066
57	WFIC, PIC	Miniature Foxboro indicator-controller	4D-D	98	7802
58	WFIC	Miniature Foxboro indicator-controller	4D-D	119	7799
59	WFR, DPR, SGR, FR, TR, RR, pHR	Miniature recorders		23, 24, 25, 26, 27, 28	8404(c)
60	RR	Standard strip-chart recorders	3C-A	87	7995
61	CRR	Standard strip-chart recorders	3C-A	125	8068
62	FRC, IRS, WFRC, SGRC, TRC, PRC	Miniature recorder-controller		31, 32, 33, 34, 35, 36, 37	8404(c)
63	FIX	Pneumatic integrators		14, 15, 16	8404(c)
64	FX	Electric integrators		17	8404(c)
65	VC	Manual controllers		79	8404(c)
66	TRV/TE	Temperature-regulating valve	7H-A	186, 187	8504
67	TRV/TE	Temperature-regulating valve	7H-A	188	8531
68	ASP	Adjuster, set pointer		82	8404(c)
69	DOV	Hammel-Dahl throttling valve	7A-E	201	8700
70	DOV	Hammel-Dahl on-off valve	7A-F	203	8700
71	DOV	Hammel-Dahl on-off valve	7A-C	182	8572
72	DOV	Hammel-Dahl throttling valve	7A-D	190	8572
73	DOV	On-off valve	7A-A	198	8623
74	DOV	On-off valve	7A-G	195	8623
75	DOV	On-off valve	7A-A	199, 200	8427
76	DOV	Hammel-Dahl throttling valve	7A-D	222	8693
77	DOV	Saunders-type on-off valve	7A-H	229	8414
78	DOV	Throttling valve	7A-J	232	8099
79	DOV	Throttling valve	7A-J	237, 238	8637
80	Do valve	On-off valves	7A-A	135, 136, 137, 138	8252
81	Do valve	On-off valves	7A-A	139	8508
82	DOV	Butterfly valve	7A-B	180	8182
83	VE	Solenoid valves	7C-A	160	8336
84	WFAS	Pressure switch alarm	6A-C	161	8089
85	SI	Tachometer		202A-517-F1	8986
86	WOBE	Wobble meter			(d)

Notes:

(a) The mark number identifies the group classification of instruments.
(b) The instrument data sheets give the instrument specifications and show the equipment piece number which identifies the instrument service and location.
(c) This BPF includes all the instruments on the graphic panel, the electronic transmitting rotameters, and the various electric-to-pneumatic converters.
(d) Drawing numbers H-4-2361, 2, and 3; and H-4-2406.

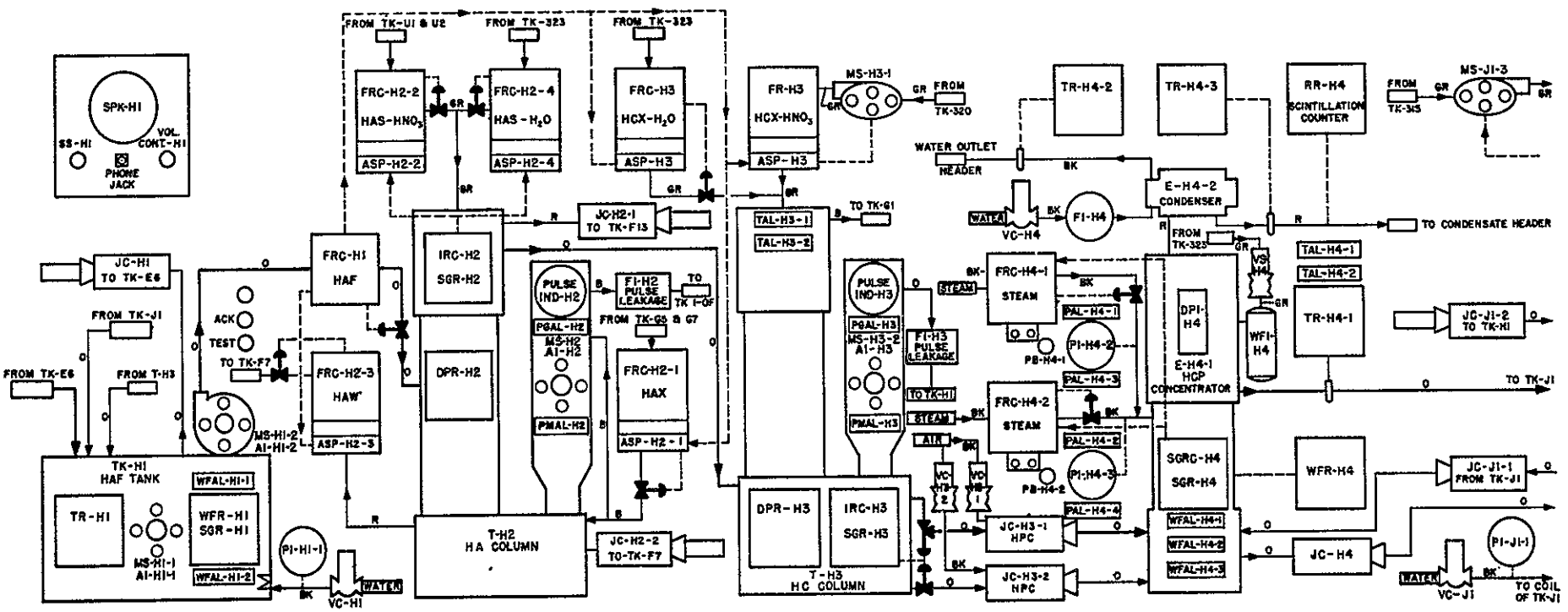

LINE COLOR CODE

R — RED	(WASTE)	GD — GOLD	(PLUTONIUM)
DR — DARK RED	(OFF-GAS)	O — ORANGE	(COMBINED PLUTONIUM & URANIUM)
B — BLUE	(ORGANIC)	Y — YELLOW	(URANIUM)
BK — BLACK	(STEAM, WATER, AIR)	S — SILVER	(SIGNAL LINES)
GR — GREEN	(AQUEOUS)		

FIGURE XVII-1

GRAPHIC PANEL B-1

CENTRAL CONTROL ROOM

HW-31000

FIGURE XVII-2
ELECTRONIC ROTAMETER
CANYON SERVICE

FISCHER & PORTER

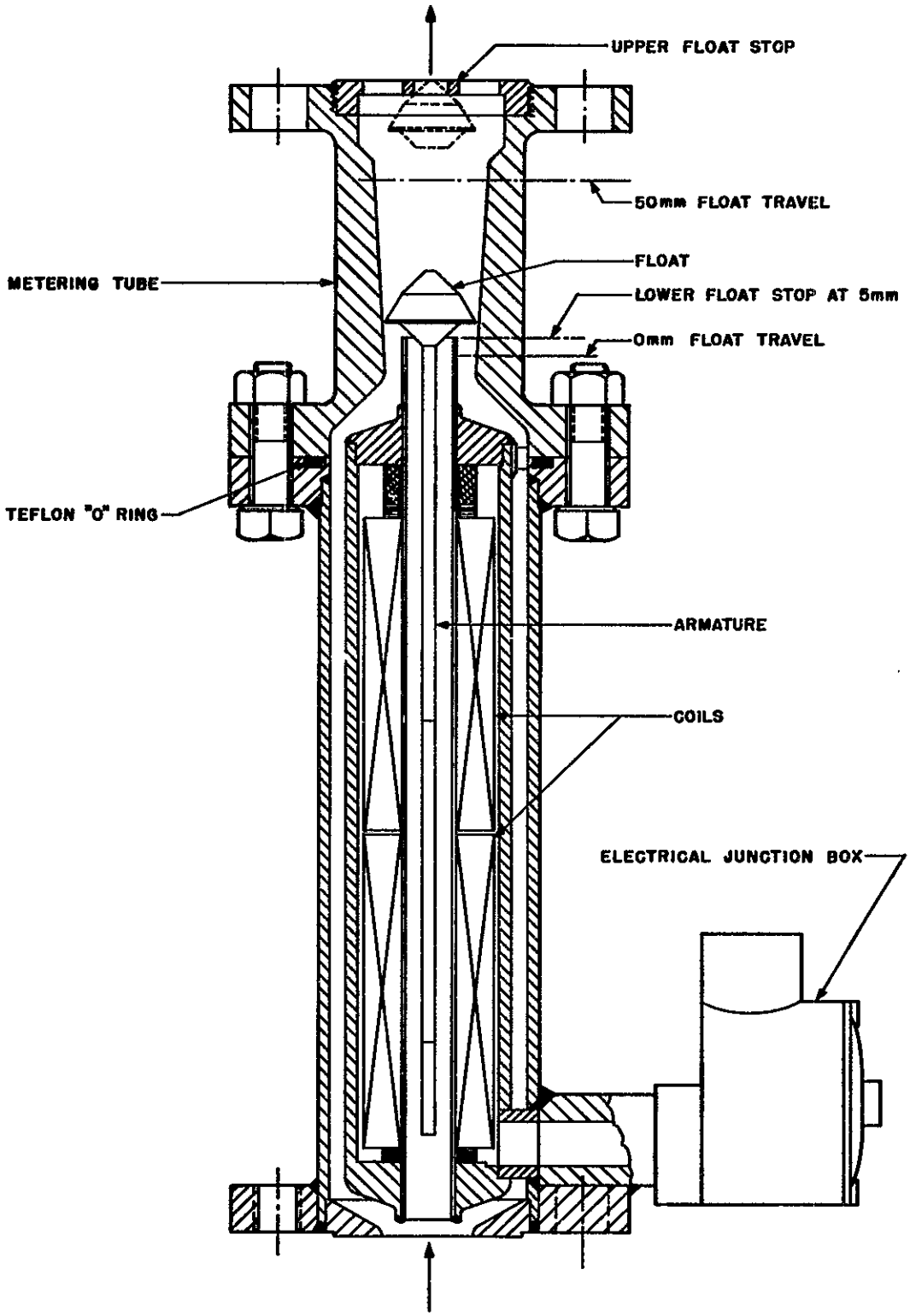

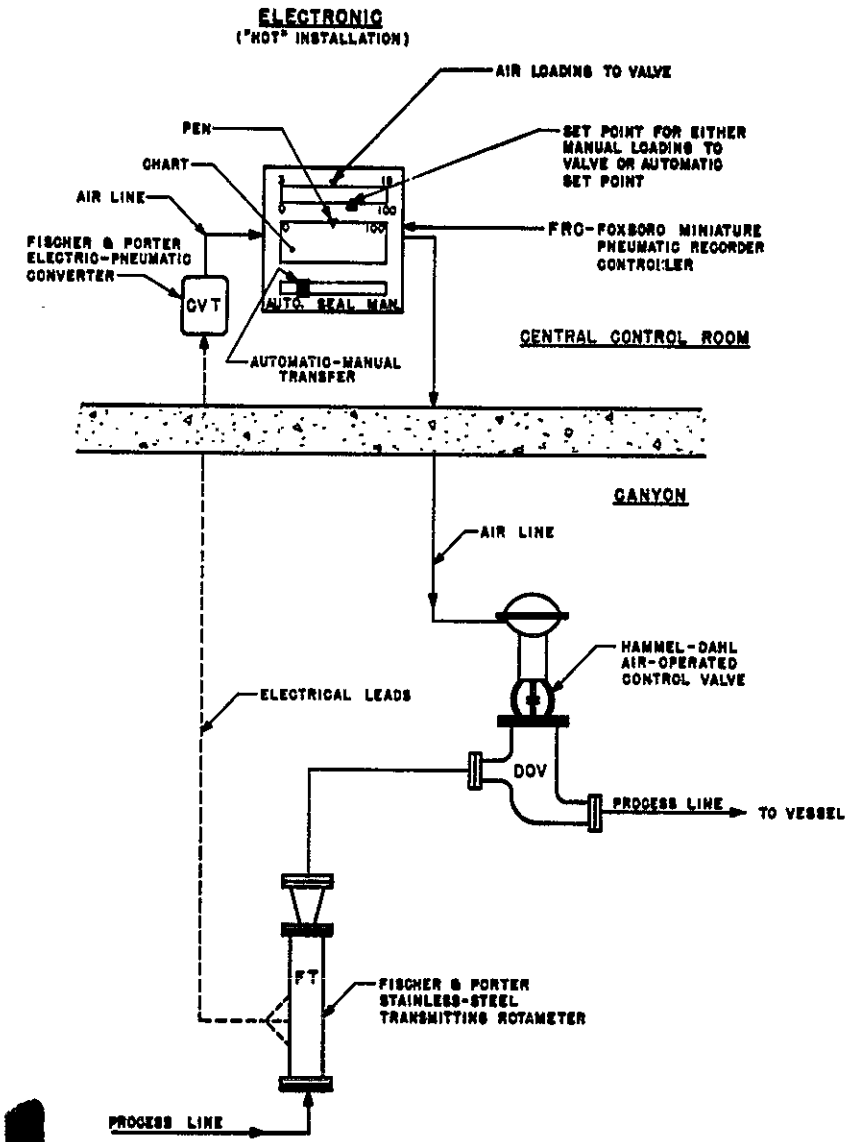

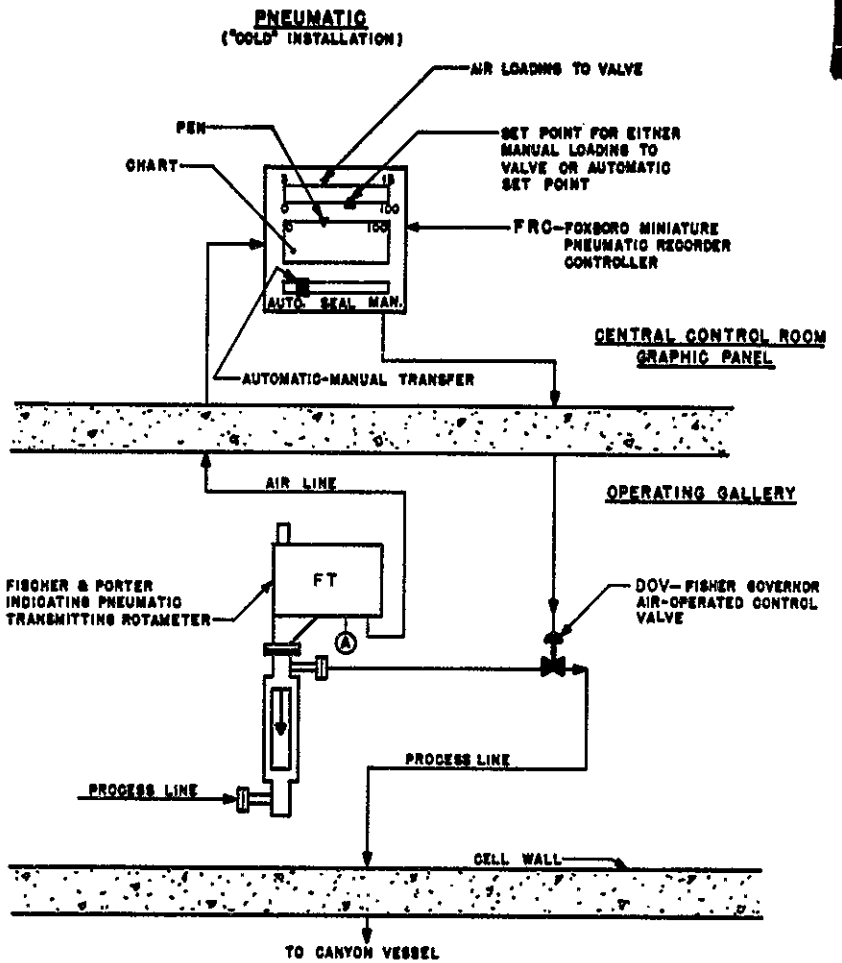

FIGURE XVII-3

ROTAMETER SYSTEMS

HW-31000

SIMPLE ORIFICE SYSTEM

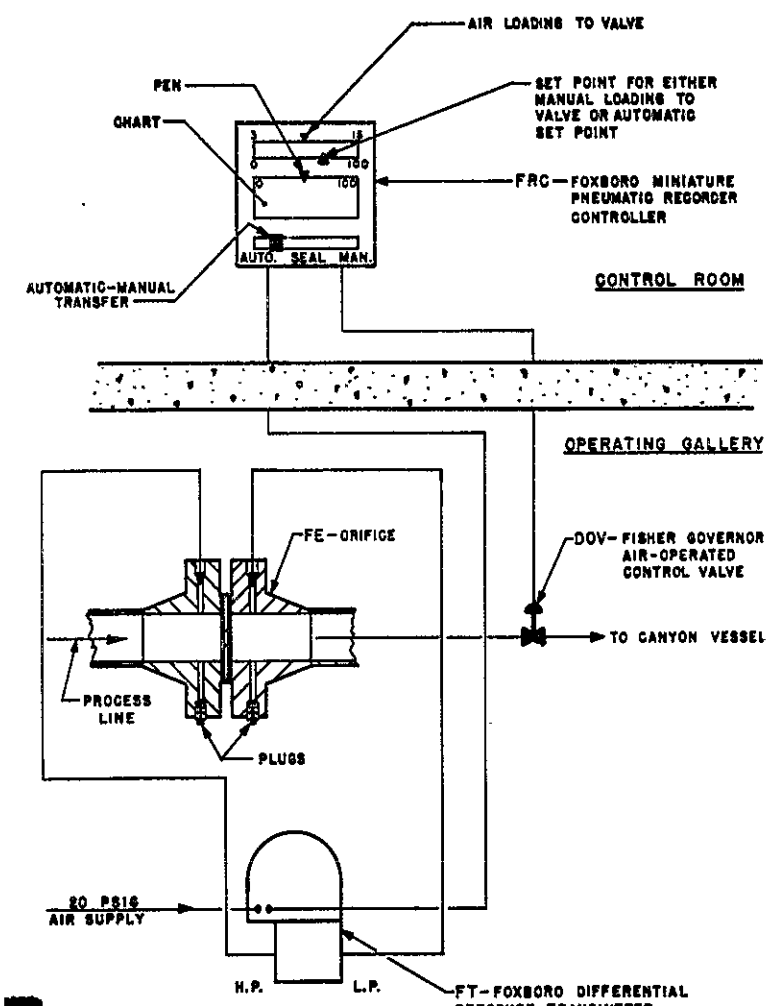

HEAD-ABOVE-ORIFICE FLOW METER
("FLOW POT")

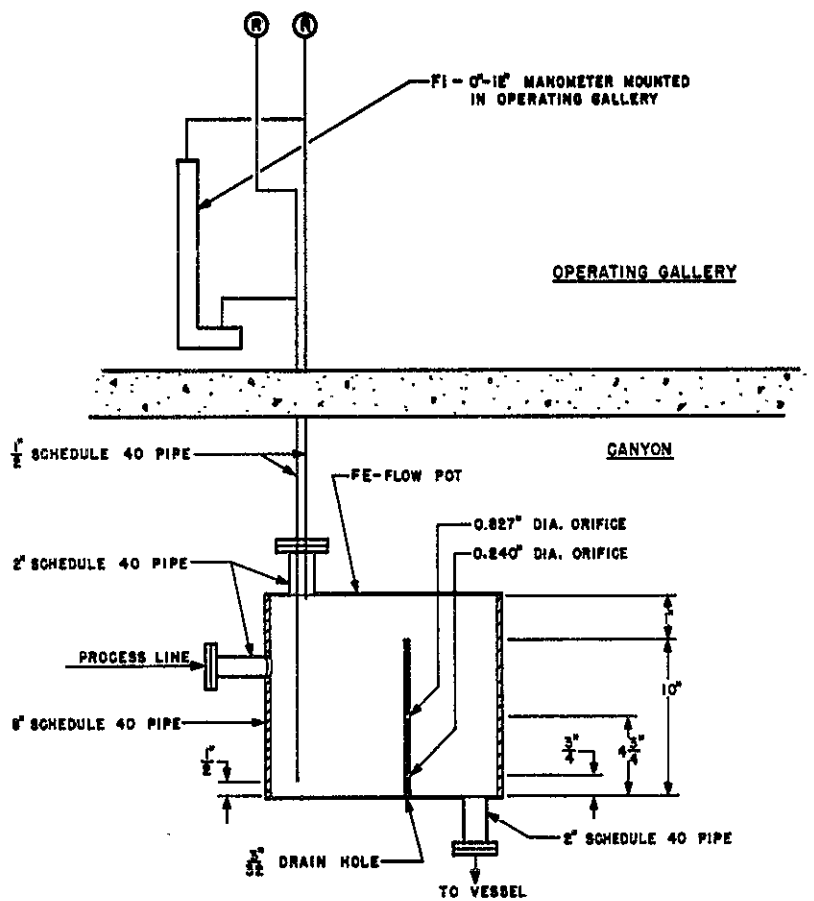

FIGURE XVII- 4

ORIFICE SYSTEMS

METERING PUMP AND STEAM INJECTOR SYSTEM
(HGX, 1CX & 2EX STREAMS)

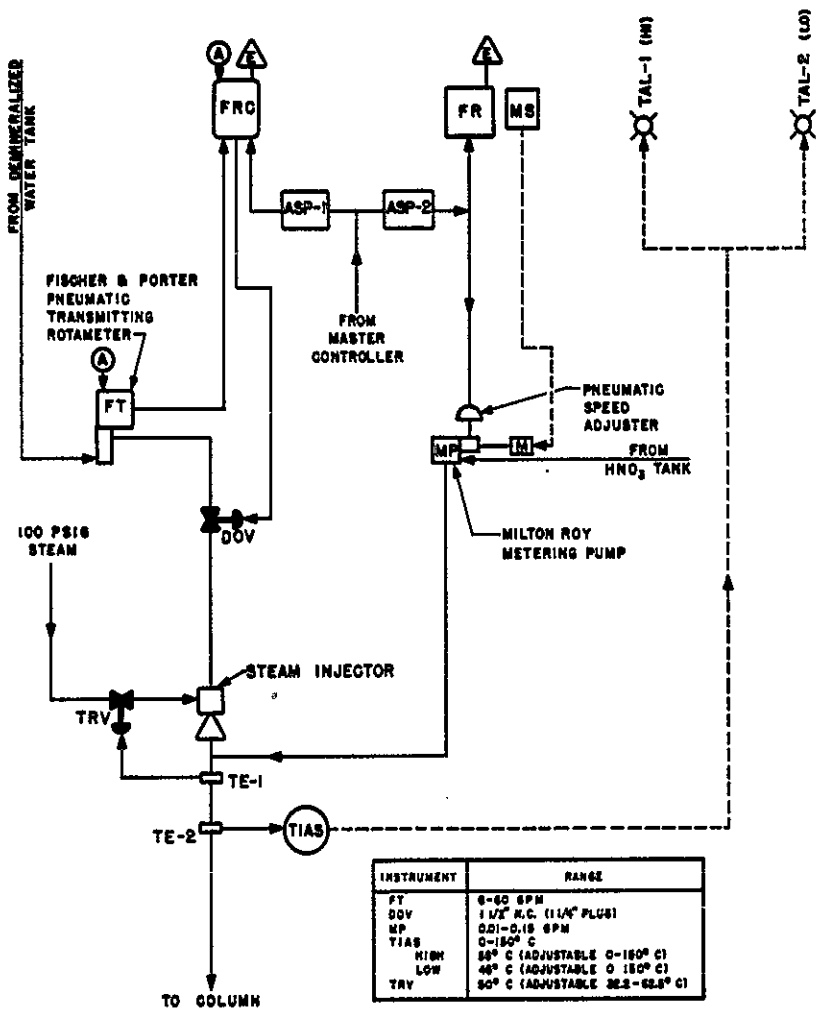

INSTRUMENT	RANGE
FT	0-60 GPM
DOV	1 1/2" N.C. (1 1/4" PLUG)
MP	0.01-0.15 GPM
TIAS	0-150° C
HIGH	50° C (ADJUSTABLE 0-150° C)
LOW	46° C (ADJUSTABLE 0-150° C)
TRV	50° C (ADJUSTABLE 32.2-62.8° C)

DISPLACEMENT METER SYSTEM

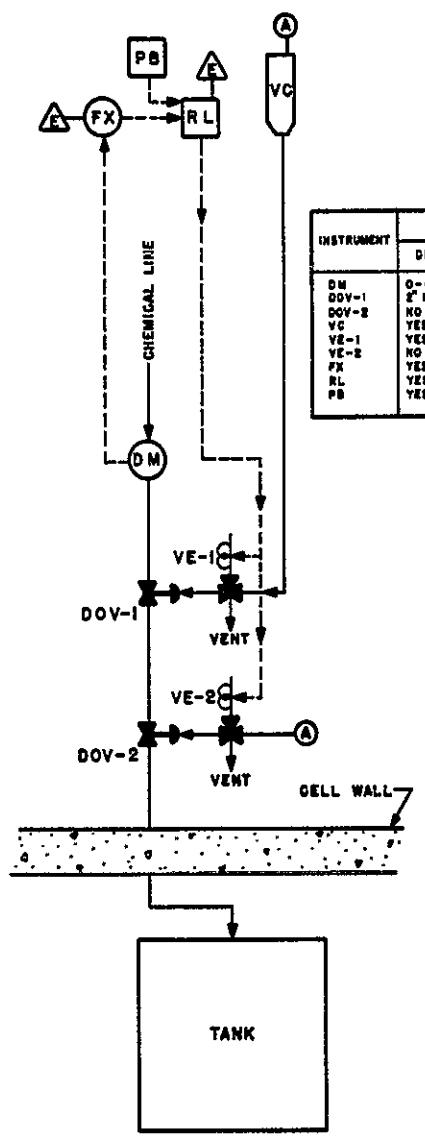

INSTRUMENT	RANGE				
	DM-A3-1	DM-A3-2	DM-E6-1	DM-E6-2	DM-B5-1 & 2 DM-R5-1 & 2
DM	0-62.5 GPM	0-62.5 GPM	0-37.5 GPM	0-37.5 GPM	0-50 GPM
DOV-1	2" N.C.	2" N.C. (1 1/2" PLUG)	1 1/2" N.C.	2" N.C. (1 1/4" PLUG)	NO
DOV-2	NO	2" N.C. ON-OFF	NO	NO	NO
VC	YES	YES	YES	YES	NO
VE-1	YES	YES	YES	YES	NO
VE-2	NO	YES	NO	NO	NO
FX	YES	YES	YES	YES	NO
RL	YES	YES	YES	YES	NO
PB	YES	YES	YES	YES	NO

FIGURE XVII-5

FLOW-METERING SYSTEMS

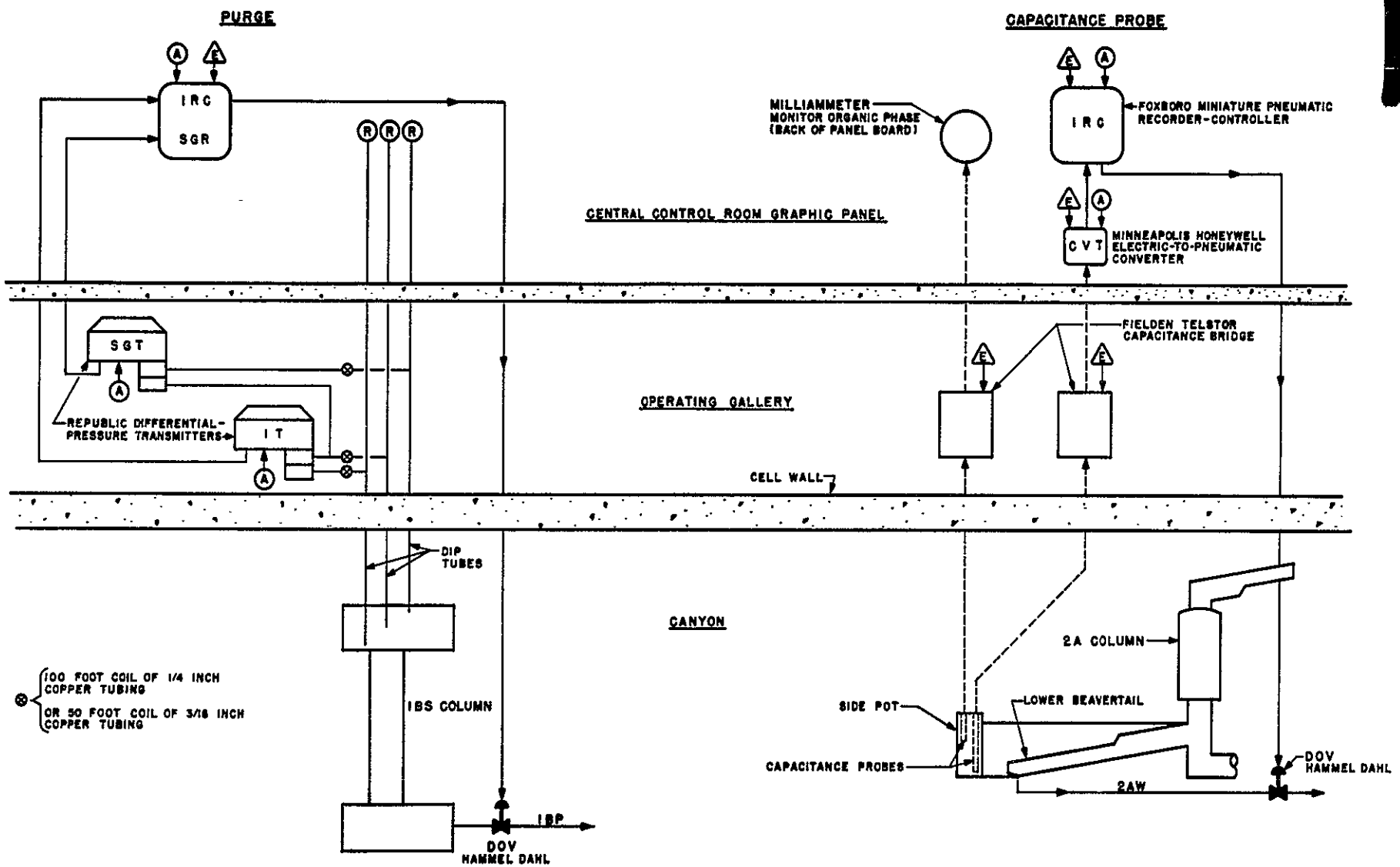

FIGURE XVII-6

COLUMN INTERFACE-MEASURING SYSTEMS

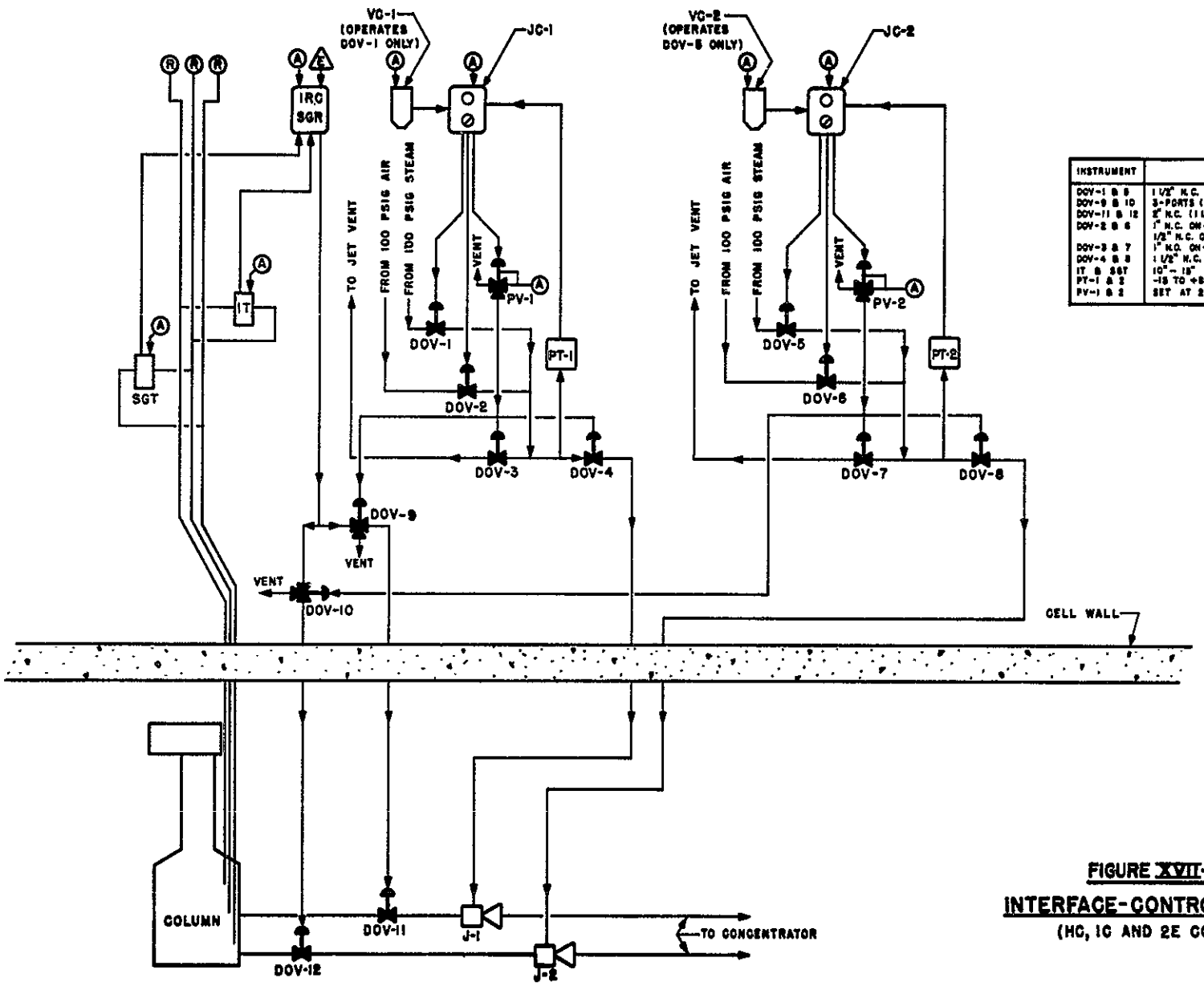

INSTRUMENT	RANGE
DOV-1 & 5	1 1/2" N.C.
DOV-9 & 10	3-PORTS (1/4")
DOV-11 & 12	2" N.C. (1 1/2" PLUG)
DOV-2 & 6	1" N.C. ON-OFF (HC COLUMN)
	1/2" N.C. ON-OFF (1C & 2E COLUMNS)
DOV-3 & 7	1" N.O. ON-OFF
DOV-4 & 8	1 1/2" N.C. ON-OFF
IT & SGT	10" - 15"
PT-1 & 2	-15 TO +55 PSIG
PV-1 & 2	SET AT 2 PSIG

FIGURE XVII-7

INTERFACE-CONTROL SYSTEM

(HC, 1C AND 2E COLUMNS)

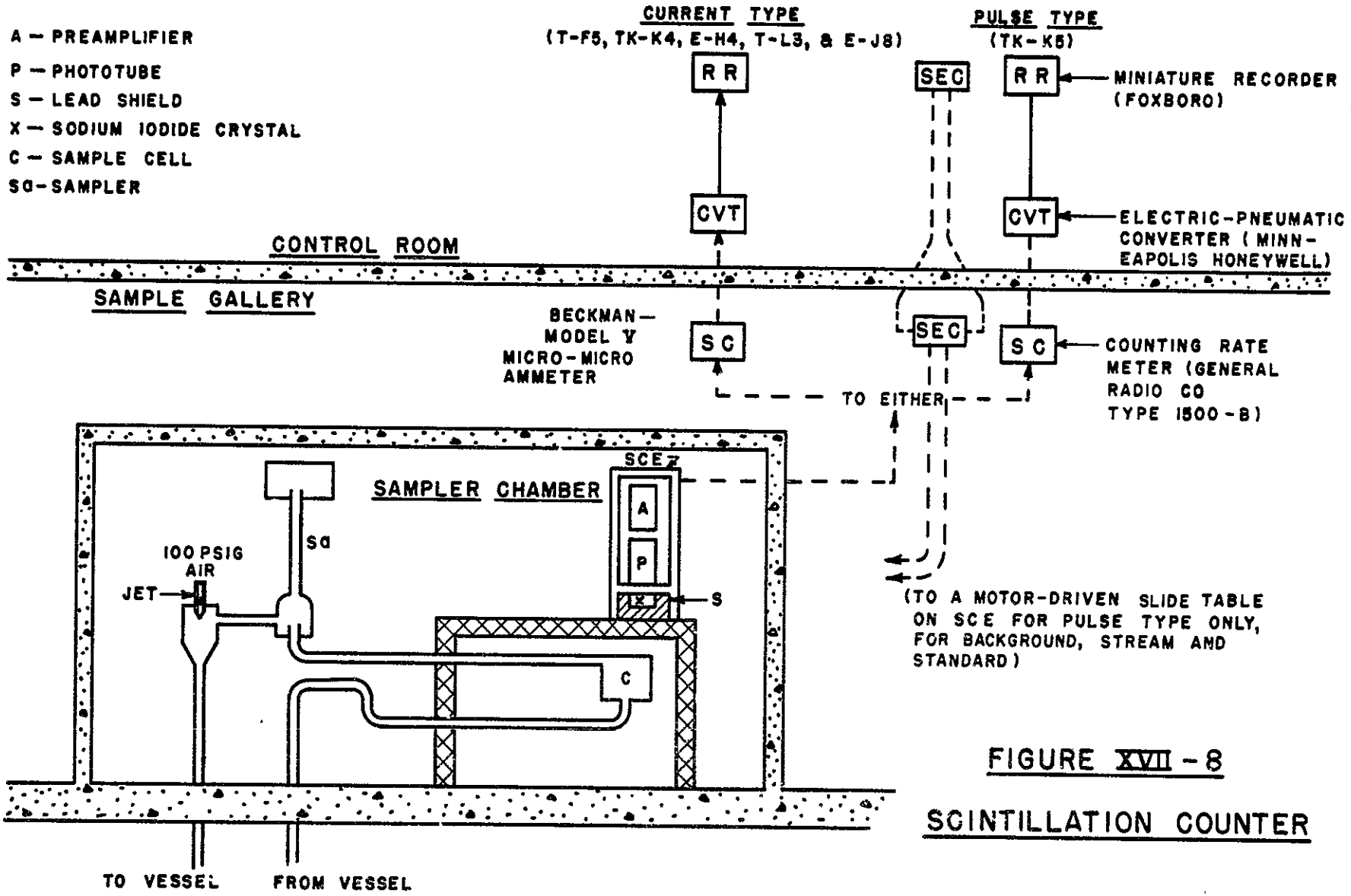

FIGURE XVII-8

SCINTILLATION COUNTER

HW-31000

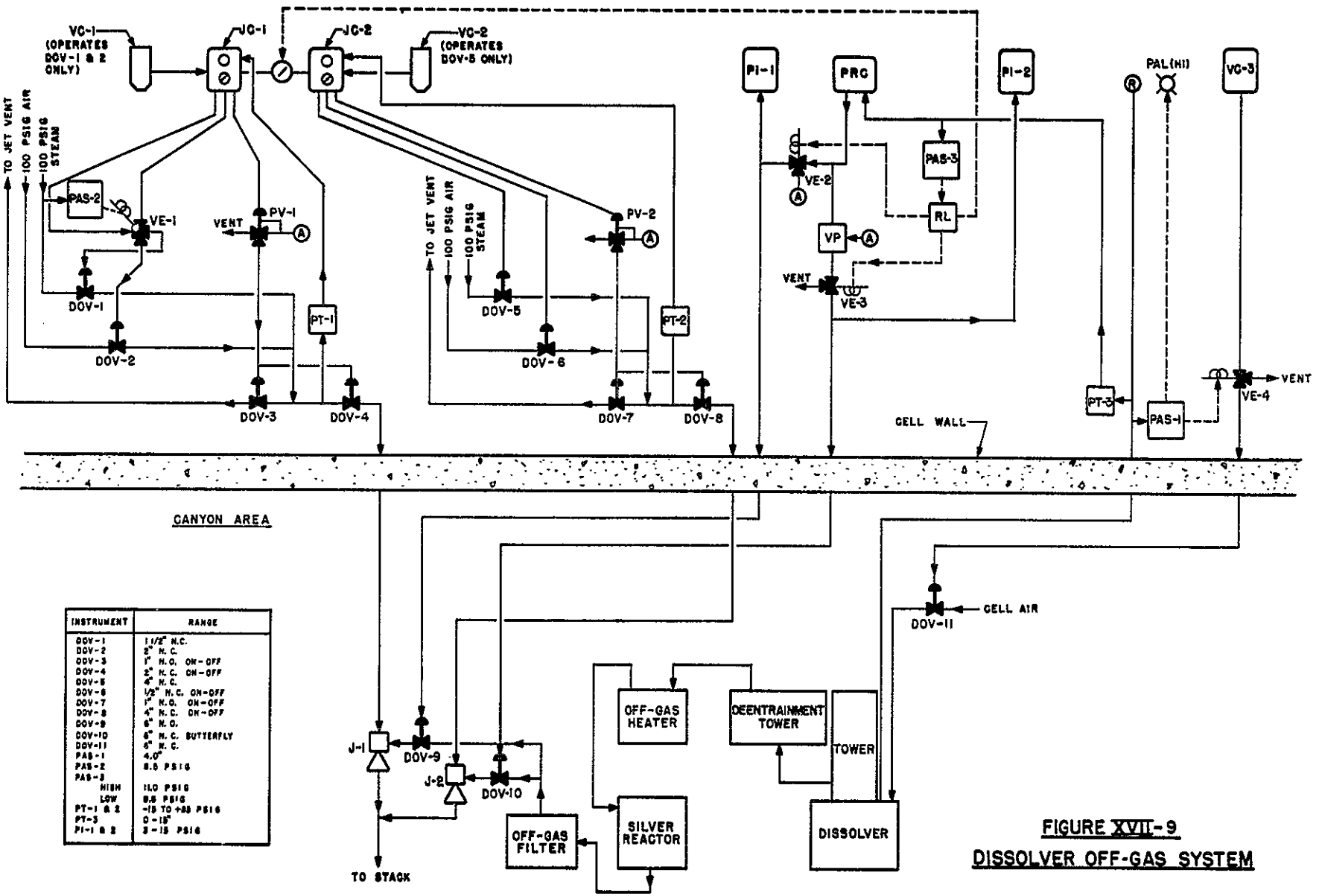

INSTRUMENT	RANGE
DOV-1	1 1/2" N.C.
DOV-2	2" N.C.
DOV-3	1" N.O. ON-OFF
DOV-4	2" N.C. ON-OFF
DOV-5	4" N.C.
DOV-6	1/2" N.C. ON-OFF
DOV-7	1" N.O. ON-OFF
DOV-8	4" N.C. ON-OFF
DOV-9	6" N.O.
DOV-10	6" N.C. BUTTERFLY
DOV-11	6" N.C.
PAS-1	4.0"
PAS-2	8.5 PSIG
PAS-3	
HIGH	11.0 PSIG
LOW	8.5 PSIG
PT-1 & 2	-15 TO +35 PSIG
PT-3	0-15"
PI-1 & 2	3-15 PSIG

FIGURE XVII-9

DISSOLVER OFF-GAS SYSTEM

HW-31000

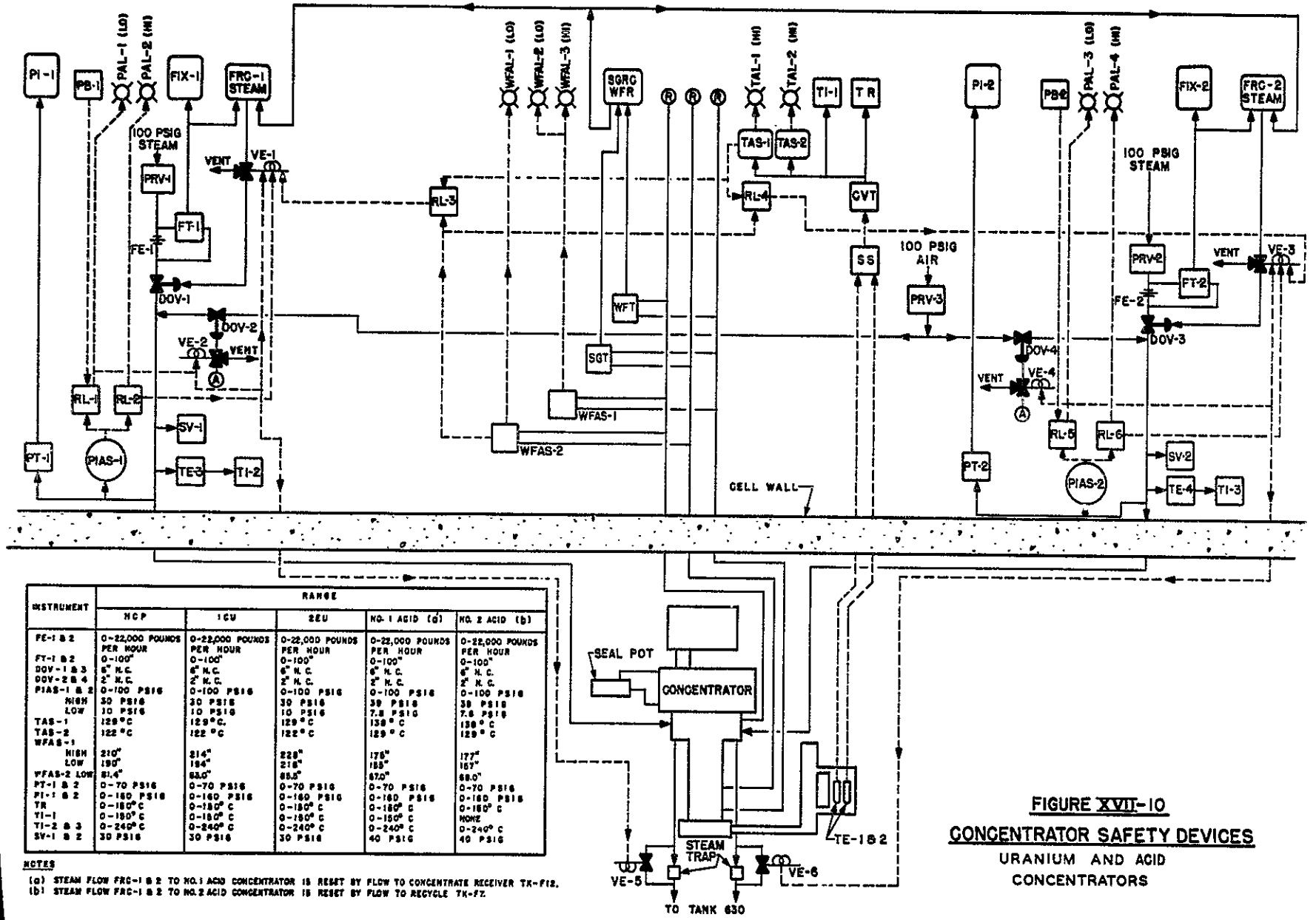

INSTRUMENT	RANGE				
	HCP	1CU	2EU	NO. 1 ACID (a)	NO. 2 ACID (b)
FE-1 & 2	0-22,000 POUNDS PER HOUR	0-22,000 POUNDS PER HOUR	0-22,000 POUNDS PER HOUR	0-22,000 POUNDS PER HOUR	0-22,000 POUNDS PER HOUR
FT-1 & 2	0-100"	0-100"	0-100"	0-100"	0-100"
DOV-1 & 3	6" N.C.	6" N.C.	6" N.C.	6" N.C.	6" N.C.
DOV-2 & 4	2" N.C.	2" N.C.	2" N.C.	2" N.C.	2" N.C.
PIAS-1 & 2	0-100 PSIG	0-100 PSIG	0-100 PSIG	0-100 PSIG	0-100 PSIG
HIGH	30 PSIG	30 PSIG	30 PSIG	39 PSIG	38 PSIG
LOW	10 PSIG	10 PSIG	10 PSIG	7.8 PSIG	7.8 PSIG
TAS-1	129°C	129°C	129°C	138°C	138°C
TAS-2	122°C	122°C	122°C	129°C	129°C
WFAS-1					
HIGH	210"	214"	228"	175"	177"
LOW	190"	194"	218"	155"	157"
WFAS-2 LOW	81.4"	83.0"	85.5"	67.0"	68.0"
PT-1 & 2	0-70 PSIG	0-70 PSIG	0-70 PSIG	0-70 PSIG	0-70 PSIG
PI-1 & 2	0-160 PSIG	0-160 PSIG	0-160 PSIG	0-160 PSIG	0-160 PSIG
TR	0-180°C	0-180°C	0-180°C	0-180°C	0-180°C
TI-1	0-150°C	0-150°C	0-150°C	0-150°C	NONE
TI-2 & 3	0-240°C	0-240°C	0-240°C	0-240°C	0-240°C
SV-1 & 2	30 PSIG	30 PSIG	30 PSIG	40 PSIG	40 PSIG

NOTES

(a) STEAM FLOW FRC-1 & 2 TO NO.1 ACID CONCENTRATOR IS RESET BY FLOW TO CONCENTRATE RECEIVER TK-F12.
(b) STEAM FLOW FRC-1 & 2 TO NO.2 ACID CONCENTRATOR IS RESET BY FLOW TO RECYCLE TK-F7.

FIGURE XVII-10

CONCENTRATOR SAFETY DEVICES

URANIUM AND ACID CONCENTRATORS

HW-31000

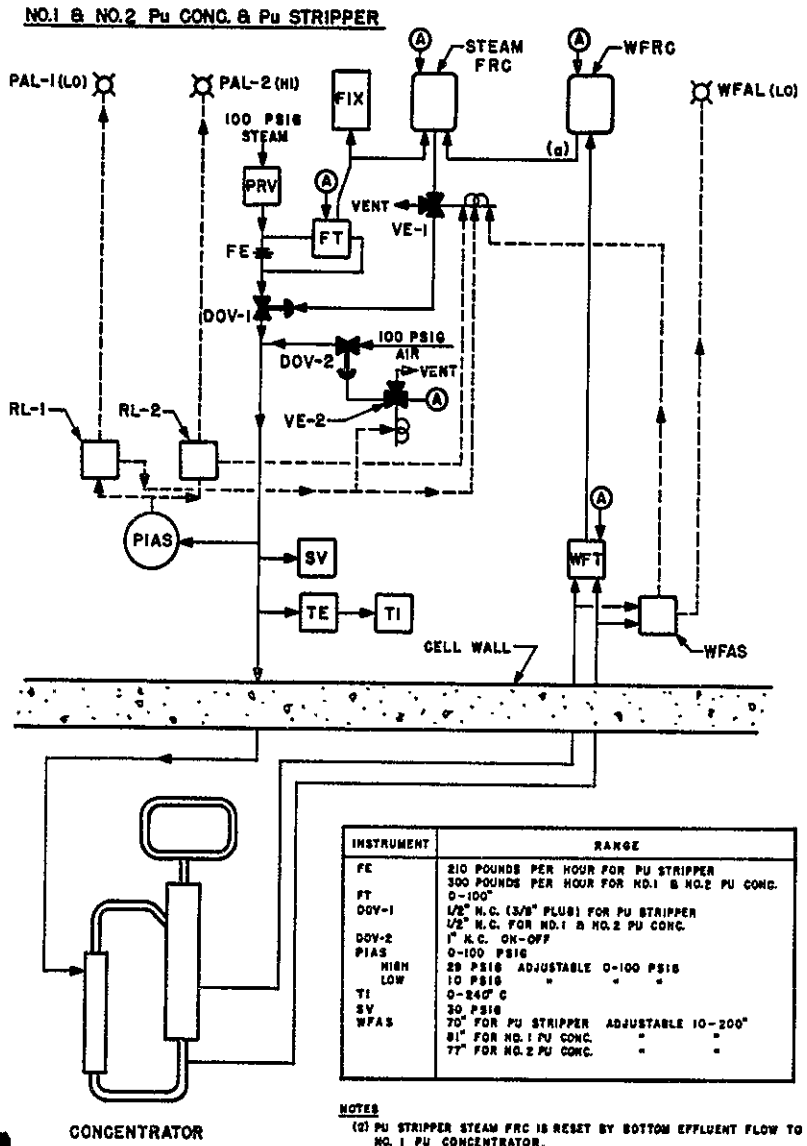

INSTRUMENT	RANGE
FE	210 POUNDS PER HOUR FOR PU STRIPPER 300 POUNDS PER HOUR FOR NO.1 & NO.2 PU CONC.
FT	0-100"
DOV-1	1/2" N.C. (3/8" PLUG) FOR PU STRIPPER 1/2" N.C. FOR NO.1 & NO.2 PU CONC.
DOV-2	1" N.C. ON-OFF
PIAS	0-100 PSIG
HIGH	29 PSIG ADJUSTABLE 0-100 PSIG
LOW	10 PSIG " " "
TI	0-240° C
SV	30 PSIG
WFAS	70" FOR PU STRIPPER ADJUSTABLE 10-200" 81" FOR NO.1 PU CONC. " " 77" FOR NO.2 PU CONC. " "

NOTES
(2) PU STRIPPER STEAM FRC IS RESET BY BOTTOM EFFLUENT FLOW TO NO. 1 PU CONCENTRATOR.

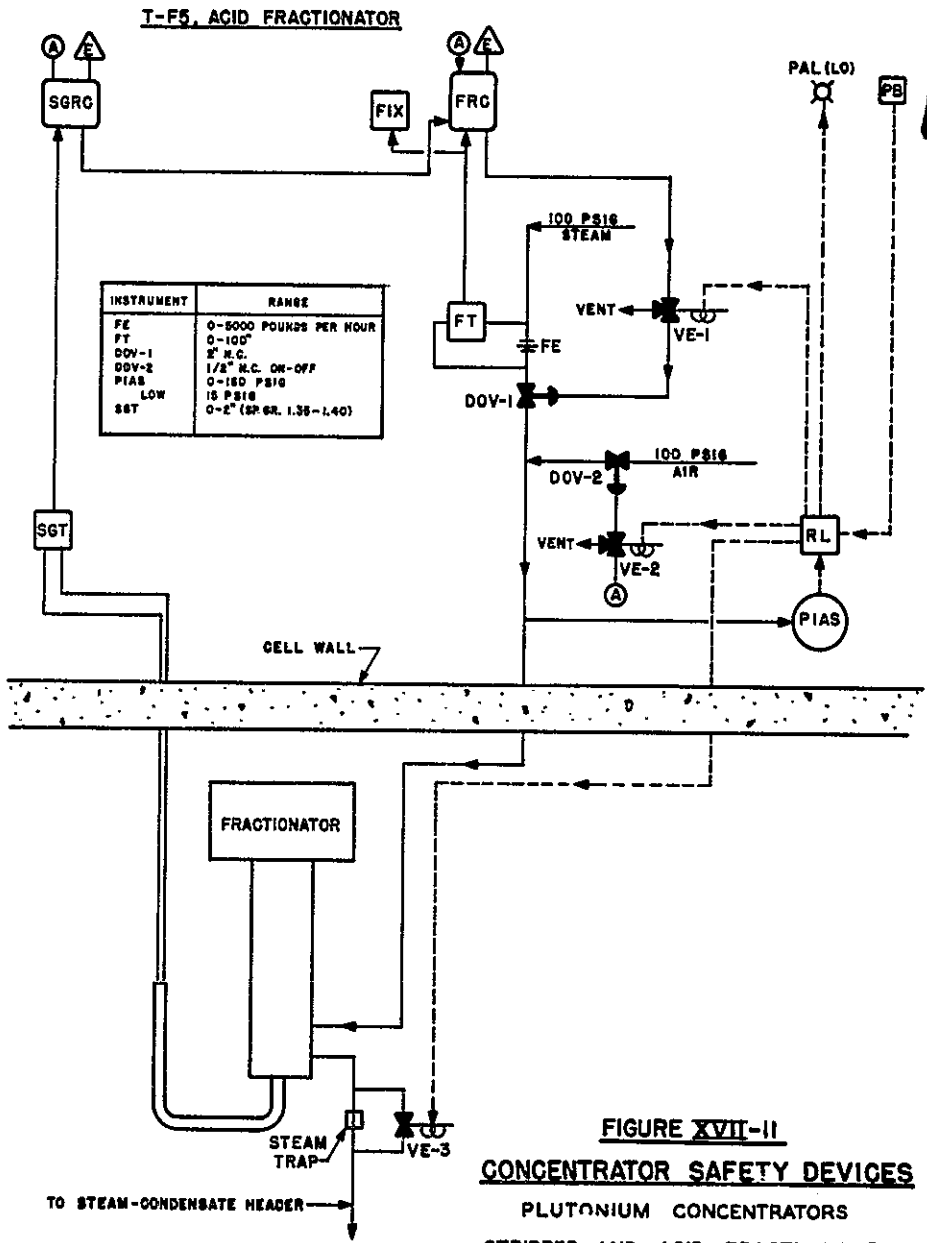

INSTRUMENT	RANGE
FE	0-5000 POUNDS PER HOUR
FT	0-100"
DOV-1	2" N.C.
DOV-2	1/2" N.C. ON-OFF
PIAS	0-150 PSIG
LOW	15 PSIG
SGT	0-2" (SP. GR. 1.35-1.40)

FIGURE XVII-11
CONCENTRATOR SAFETY DEVICES
PLUTONIUM CONCENTRATORS
STRIPPER AND ACID FRACTIONATOR

HW-31000

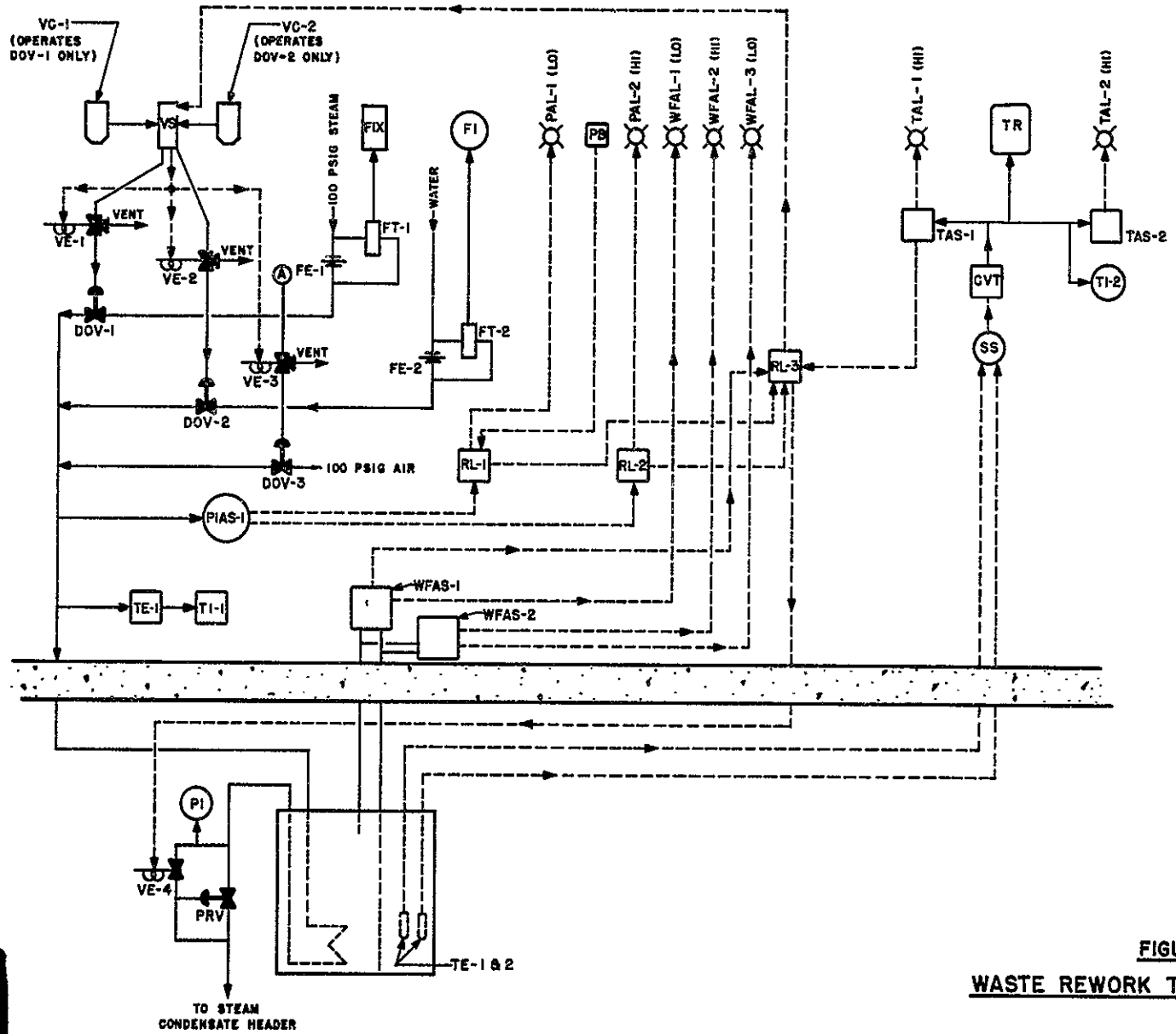

INSTRUMENT	RANGE
DOV-1	3" N.C.
DOV-2	1 1/2" N.C. (1 1/4" PLUG)
DOV-3	1/2" N.C. ON-OFF
PIAS	0-100 PSIG
HIGH	29.0 PSIG
LOW	4.34 PSIG
WFAS-1	30.0"
WFAS-2	
HIGH	117"
LOW	92"
TI-1	0-240° C
TI-2	0-180° C
TR	0-180° C
FE-1	0-5500 POUNDS PER HOUR
FE-2	0-62 GPM
FT-1	0-100"
FT-2	0-100"
PRV	2" N.C. (2" PLUG)
PI	0-100 PSIG
TAS-1	136 °C
TAS-2	129 °C

FIGURE XVII-12

WASTE REWORK TANK SAFETY DEVICES

FIGURE XVII-13

HAMMEL-DAHL CONTROL VALVE

(THROTTLING TYPE FOR CANYON SERVICE)

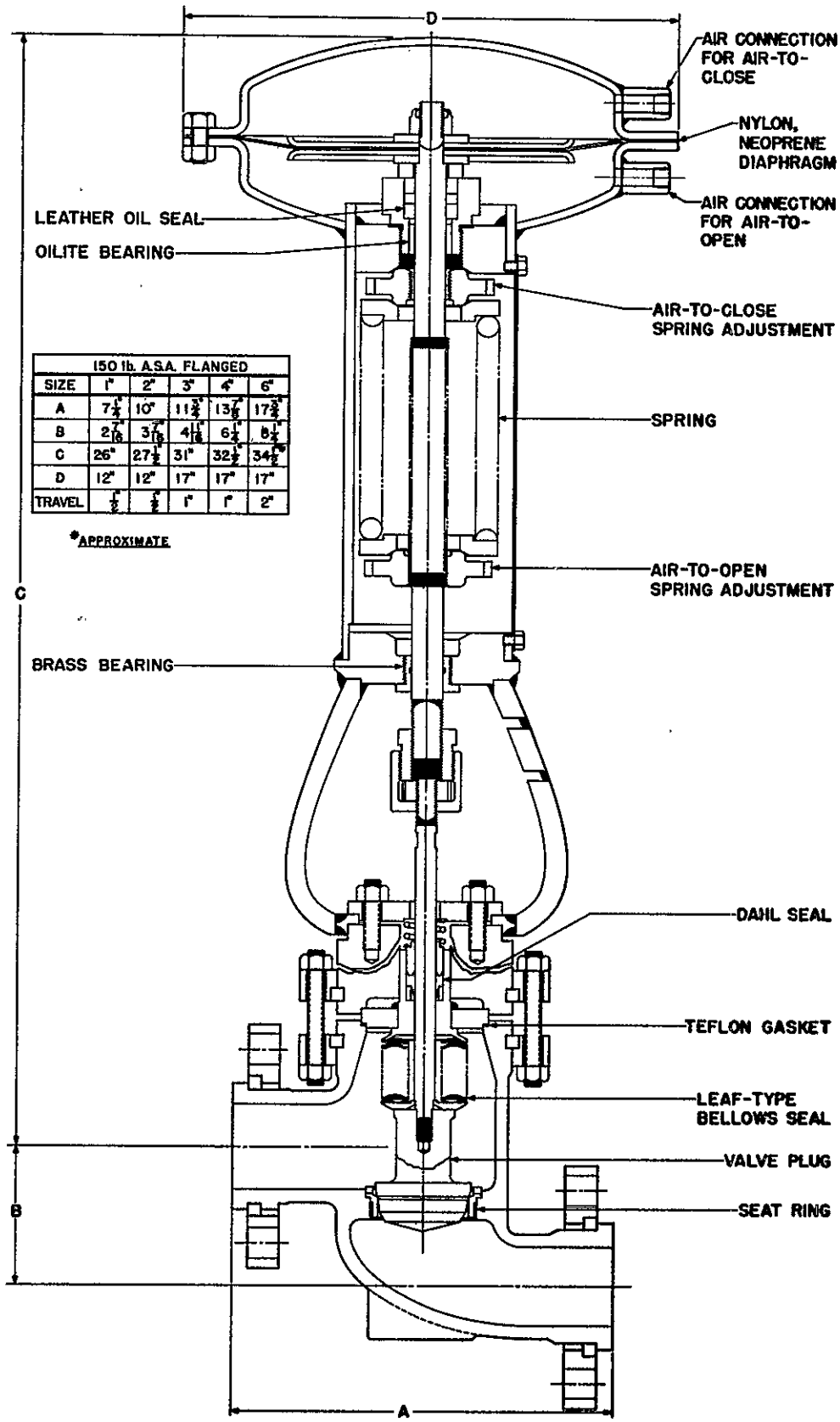

150 lb. A.S.A. FLANGED					
SIZE	1"	2"	3"	4"	6"
A	7 1/4"	10"	11 3/4"	13 7/8"	17 3/4"
B	2 7/16"	3 7/16"	4 11/16"	6 1/4"	8 1/4"
C	26"	27 1/2"	31"	32 1/2"	34 1/2"
D	12"	12"	17"	17"	17"
TRAVEL	1/2"	1/2"	1"	1"	2"

*APPROXIMATE

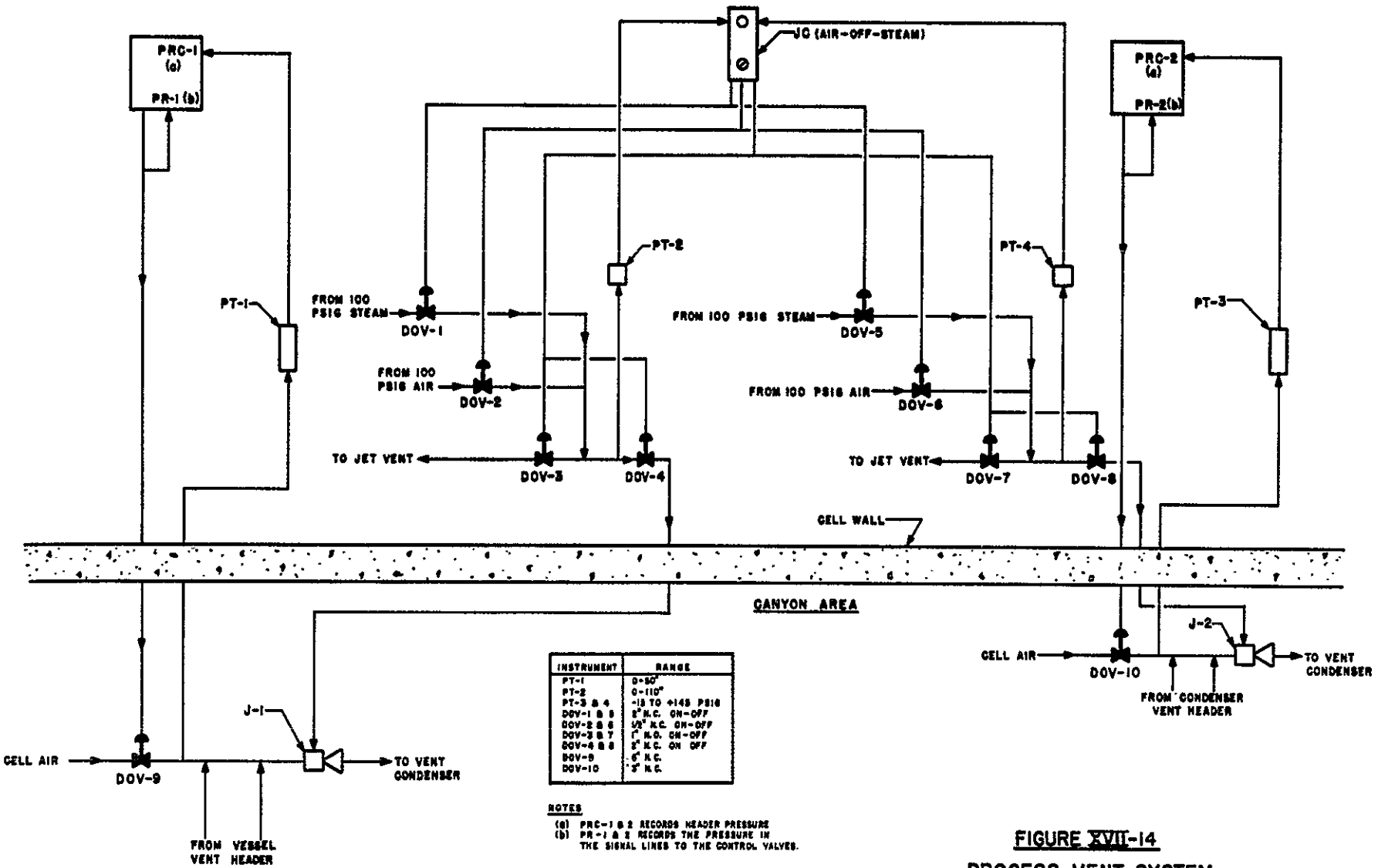

INSTRUMENT	RANGE
PT-1	0-50"
PT-2	0-110"
PT-3 & 4	-13 TO +145 PSIG
DOV-1 & 5	2" N.C. ON-OFF
DOV-2 & 6	1/2" N.C. ON-OFF
DOV-3 & 7	1" N.O. ON-OFF
DOV-4 & 8	2" N.C. ON OFF
DOV-9	6" N.C.
DOV-10	3" N.C.

NOTES
(a) PRC-1 & 2 RECORDS HEADER PRESSURE
(b) PR-1 & 2 RECORDS THE PRESSURE IN THE SIGNAL LINES TO THE CONTROL VALVES.

FIGURE XVII-14
PROCESS VENT SYSTEM

HW-31000

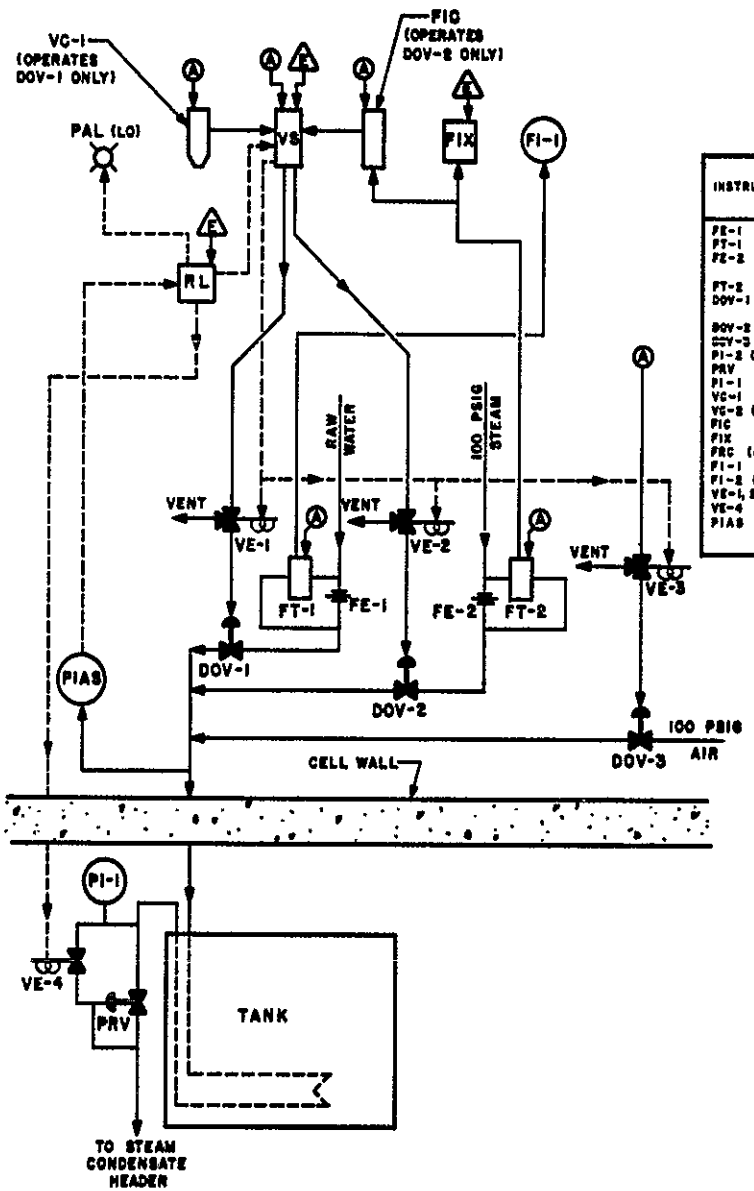

INSTRUMENT	RANGE									
	TK-A3	TK-E6	TK-G1	TK-G2	TK-R1	TK-R2	TK-F7	TK-F10	TK-F13	TK-J5
FE-1	0-100 GPM	0-62 GPM	0-62 GPM	0-62 GPM	0-62 GPM	0-62 GPM	0-62 GPM	0-62 GPM	0-62 GPM	0-90 GPM
FT-1	0-100°	0-100°	0-100°	0-100°	0-100	0-100°	0-100°	0-100°	0-100°	0-100°
FE-2	0-7000 POUNDS PER HOUR	0-1700 POUNDS PER HOUR	0-3100 POUNDS PER HOUR	0-3100 POUNDS PER HOUR	0-3100 POUNDS PER HOUR	0-3100 POUNDS PER HOUR	0-3100 POUNDS PER HOUR	0-3100 POUNDS PER HOUR	0-3100 POUNDS PER HOUR	0-1000 POUNDS PER HOUR
FT-2	0-100°	0-200°	0-200°	0-200°	0-200°	0-200°	0-200°	0-200°	0-200°	0-100°
DOV-1	3" N.C. (3 1/2" PLUG)	1 1/2" N.C. (1 1/4" PLUG)	1 1/2" N.C. (1 1/4" PLUG)	1 1/2" N.C. (1 1/4" PLUG)	1 1/2" N.C. (1 1/4" PLUG)	1 1/2" N.C. (1 1/8" PLUG)	1 1/2" N.C. (1 1/4" PLUG)	1 1/2" N.C. (1 1/4" PLUG)	1 1/2" N.C. (1 1/4" PLUG)	1 1/2" N.C.
DOV-2	3" N.C.	1 1/2" N.C.	1 1/2 N.C.	1 1/2" N.C.	1" N.C.	1" N.C.	1 1/2" N.C.	1 1/2" N.C.	1 1/2" N.C.	1 1/2" N.C.
DOV-3	1/2" N.C. ON-OFF	1/2" N.C. ON-OFF	1/2" N.C. ON-OFF	1/2" N.C. ON-OFF	1/2" N.C. ON-OFF	1/2" N.C. ON-OFF	1/2" N.C. ON-OFF	1/2" N.C. ON-OFF	1/2" N.C. ON-OFF	1/2" N.C. ON-OFF
PI-2 (b)	NO	0-160 PSIG	0-160 PSIG	0-160 PSIG	0-160 PSIG	0-160 PSIG	0-160 PSIG	0-160 PSIG	0-160 PSIG	0-160 PSIG
PRV	3" N.C.	1 1/2" N.C.	3" N.C. (2" PLUG)	3" N.C. (2" PLUG)	NO	NO	NO	NO	NO	NO
PI-1	0-100 PSIG	0-100 PSIG	0-100 PSIG	0-100 PSIG	NO	NO	NO	NO	NO	NO
VC-1	YES	YES	YES	YES	YES	YES	YES	YES	YES	YES
VC-2 (c)	NO	YES	NO	NO	NO	NO	YES	YES	YES	YES
FIC	YES	NO	NO	NO	NO	NO	NO	NO	NO	NO
FIX	YES	NO	NO	NO	NO	NO	NO	NO	NO	NO
FRC (a)	NO	NO	YES	YES	YES	YES	NO	NO	NO	NO
FI-1	YES	YES	YES	YES	YES	YES	YES	YES	YES	YES
FI-2 (d)	NO	YES	NO	NO	NO	NO	YES	YES	YES	YES
VE-1, 2 & 3	YES	YES	YES	YES	YES	YES	YES	YES	YES	YES
VE-4	YES	NO	NO	NO	NO	NO	NO	NO	NO	NO
PIAS (e)	0-160 PSIG	NO	NO	NO	NO	NO	NO	NO	NO	NO
LOW	15 PSIG	NO	NO	NO	NO	NO	NO	NO	NO	NO

NOTES
(a) FRC CONTROLS THE STEAM VALVE DOV-2, AND IS RESET BY A TRC.
(b) PI-2 IS IN PLACE OF PIAS FOR THOSE THAT HAVE IT.
(c) VC-2 CONTROLS THE STEAM VALVE DOV-2 INSTEAD OF THE FIC FOR THOSE THAT HAVE IT.
(d) FI-2 IS ON STEAM FLOW FOR THOSE THAT HAVE IT.
(e) RL AND PAL (LO) ONLY APPLY WHERE THERE IS A PIAS.

FIGURE XVII-15

COIL CONTROLS

HW-31000

PART IV: PROCESS CONTROL, continued

CHAPTER XVIII. SAMPLING AND ANALYTICAL METHODS

CONTENTS

	Page
A. SAMPLING	1802
1. General Description of Sampling Facilities	1802
2. A-Type Sampler	1803
2.1 General description	1803
2.2 Sampler jet and cup assembly	1804
2.3 Remote pipetter	1805
2.4 Dilution flasks and specific-gravity tube	1805
3. B-Type Sampler	1805
3.1 General description	1806
3.2 Bayonet sampler	1806
3.3 Bayonet replacement sampler	1807
4. C-Type Sampler	1807
5. P-1 Sampler	1808
6. Gas Sampler	1808
B. ANALYTICAL METHODS	1809
1. Introduction	1809
2. Definition of Terms	1809
3. Physical Property Determinations	1810
4. Chemical Determinations	1810
5. Radiochemical Determinations	1810
REFERENCES	1812

CHAPTER XVIII. SAMPLING AND ANALYTICAL METHODS

Process control in the Purex Plant depends on instrumentation and on analyses of samples of process materials. The instrumentation employed has been discussed in the preceding chapter. The present chapter deals with equipment and techniques for obtaining representative samples, with particular emphasis on the remote sampling of radioactive solutions, and outlines the nature, application, and limitations of the principal analytical methods available for Purex process control.

A. SAMPLING

Prerequisite for effective analytical control are representative samples of convenient size taken from the required points in the process. For the Purex Plant, sampling points are shown by Process Flow Diagrams included in the several process-description chapters in Part II of this manual. In this section the equipment and methods used for the remote sampling of process streams, at those points where radioactivity in varying degrees is normally present, are described. "Cold" streams, such as those handled in the Chemical Tank Farm or Aqueous Make-Up Facility, are sampled by conventional methods through manholes, handholes, or from spigots.

1. General Description of Sampling Facilities

For sampling radioactive liquids, five types of samplers are available: A, B, and C-type; P-1 type; and the gas samplers. All types are generally similar in that fluid-transfer devices are used to transfer samples via piping from a remote sampling point to an accessible sample container. Except for piping to the sample point all components (including controls) are located at sample stations in operating areas as near the sampling point as practicable. Sample stations are designed to provide convenient support for sampler components and protection from radiation hazards, by shielding and/or hoods as needed. Sampling points for liquids include tanks, cell sumps, and sample pots, the latter being vented enlarged sections which provide points for liquid holdup in lines between solvent-extraction columns. Gas samples are taken from gas headers.

Of the 60 Purex-Plant sample stations, 55 are used with A, B, or C-type samplers. A-type samplers are used for highly radioactive liquids, B-type for those of intermediate radioactivity, C-type for low-activity liquid samples. Samplers of all three of these types utilize air-operated jets for transferring samples of liquids from sampling points in the cells to sample stations located in the Sample Gallery, approximately 27 feet above most of the sampling points. A complete installation includes equipment for sampling either one or two sampling points. For the latter case, the second point is always a process sump for which a second jet, with associated piping, etc., is provided. For the A and B-type samplers facilities are also included for the optional installation of in-line analytical instruments (discussed in Chapter XVII).

P-1 samplers utilize syringes for drawing samples from the Plutonium Sample Tanks and the sump in the L-11 enclosure to stations in the PR Room adjacent to these points.

Gas samplers utilize vacuum pumps for drawing samples from process gas headers in the cells to stations in the Sample Gallery.

2. A-Type Sampler

The A-type sampler was developed for use at the Purex Plant to simplify the handling of samples of high-level radioactive liquids. This was accomplished by providing, at the sample station, facilities for accurately and remotely pipetting small-volume samples for delivery to the laboratory. A typical A-type sampler is shown in Figure XVIII-1.

2.1 General description

An A-type sampler includes the following operating components, all of which (except for piping to the sample point) are located at a sample station in the Sample Gallery:

(a) One or two jet assemblies, each of which includes an air-operated sampler jet, with suction and discharge piping, for the recirculation of liquids from a sampling point, via a sample cup to the jet, and back to the sampling point.

(b) A Hanford remote pipetter, arranged for transferring by remote pipetting measured microvolumes of solution from the sample cup (or cups) to dilution flasks or a specific-gravity tube (see (c) and (d), below).

(c) Dilution flasks (normally four per sample station), for dilution of samples and their subsequent transfer to the laboratory.

(d) A specific-gravity tube, for determining specific gravity of the sample at the sampler station.

(e) An in-line instrument facility, including the necessary piping and, for some stations, the instrument itself.

At the sample station, the components described above are supported and housed by a relatively massive structure of concrete, lead, and stainless steel which separates the operating components from adjacent controls (and, therefore, the Sample Gallery proper) by means of shielding barricades and a ventilated hood (Figure XVIII-1). The sampler jets, necessary flow-control valves, and associated piping are housed in a concrete pit (the valve pit) fitted with a removable cover block. Adjacent and to the left, a separate concrete pit has been provided for installation of an in-line instrument. To the right are two lead-shielded compartments, covered by a ventilated stainless-steel hood, which enclose (a) the sampler cups and (b) the dilution flasks and specific-gravity tube. Two lead-shielded doors and two lead-glass windows for access and for viewing are provided in the shielding

wall for these compartments. The Hanford remote pipetter is supported outside the lead-shielded compartments in a convenient operating position and is movable; the pipette tip and extension reach over the barricade (through slots in the hood) and into the compartments. The thickness of concrete or lead shielding provided at a sample station varies between stations and between parts of a station. Concrete shielding may be from two to four feet thick; lead may be from three to five inches thick; and lead-glass viewing windows may be from two to six inches thick. In any event, surface radiation during sampling is limited to 1 mr./hr. at the front of the sample station and 50 mr./hr. at either side or the top. Escape of air-borne contamination from the hood is prevented by use of an exhaust ventilation system.

2.2 Sampler jet and cup assembly

Sampler jet and cup assemblies include an air-operated sampler jet, a sample cup, piping between these components and the sampling point, and other associated piping and valves. In general, all parts are fabricated from stainless steel. Using air to the jet at 90 lb./sq. in., process solutions are recirculated at approximately 100 to 200 ml./min. in this assembly. For a description of the jet itself reference is made to Chapter XIV.

The sample cup, an adaptation of the standard Hanford sample cup, is essentially an enlargement in the jet suction line, baffled to promote mixing of the sample stream and capable of holding up about 5 ml. of solution. A vertical riser tube, equipped with a plug gate valve and a removable riser cap, allows access to the sample cup for the purpose of pipetting a sample. The cup and riser cap are lead shielded. The riser cap may be raised and lowered by use of a pulley mechanism which is controlled from a point outside the sample-station shielding barricades.

Sampler jet and cup assemblies are piped for the continuous flow of liquid from the sampling point via the sampling cup to the suction side of the jet; a mixture of air and liquid is discharged from the jet back to the sampling point (which is vented). The suction line is 1/4-in. I.P.S. stainless steel and the discharge line is 1/2-in. I.P.S. stainless steel. An air lift assists in attaining reasonable recirculation rates at the high lifts involved by introducing a small quantity of air at a low point in the suction leg, thereby reducing the apparent specific gravity of the material being lifted. Air for the lift flows via a 1/2-in. I.P.S. stainless-steel line, which is orificed and open to the atmosphere at the valve pit (at the sample station), to a point as low as practical in the jet suction line, but still above the liquid level at the sampling point. Piping for the jet and cup assemblies also includes lines which allow optional recirculation through an in-line instrument (in series with the sample cup). Valves necessary for the operation of the assembly are located in the valve pit; by use of extension handles equipped with angle drives the valves are operated from a point outside the sample-station shielding barricades.

2.3 Remote pipetter

The Hanford remote pipetter utilizes a Gilmont Ultramicroburet and a hydraulic reservoir, leading via capillary tubing to an accurately drilled pipette tip, for the transfer of measured microvolumes of liquids between sample cups, dilution flasks, and the specific-gravity tube. Known volumes of process liquids are drawn into or released from the pipette tip by displacement with hydraulic fluid, the flow of which is accurately indicated and controlled by operation of the Gilmont unit.

The pipetter operating assembly is mounted on a pipette stand and guide rails outside the sample-station shielding barricade with an extension arm, which carries the capillary tubing and pipette tip, reaching over the barricade. The stand and guide rails are designed to provide for movement of the pipetter; in order to make transfers between sample cups, dilution flasks, and the specific-gravity tube, the pipette tip may be raised, lowered, or moved horizontally along a center line which is common to these components. The sample-station hood is appropriately slotted to accommodate this travel.

Sample volumes are measured by a dial-type gauge which is a part of the Gilmont Ultramicroburet. The dial is divided into 1000 units; one revolution on the dial represents 10 microliters (0.01 ml.). The minimum size sample volumes required (according to plans at the time of the Purex-Plant start-up) are 10 microliters for laboratory analyses and 5-microliter drops for specific-gravity determinations using the sample-station apparatus, although volumes as small as 1 microliter can be pipetted with an accuracy of ±3 per cent. The maximum volume that can be pipetted, with the sampler as originally designed, is 100 microliters. With slight modifications, however, larger samples may be taken.

2.4 Dilution flasks and specific-gravity tube

Four 10-ml. glass dilution flasks, for diluting pipetted samples and for use as containers in carrying them to the laboratory, are located in a separately shielded compartment adjacent to and on a center line common to the sample cup (or cups). The dilution flasks are arranged on two carriers, two to a carrier, and are equipped with removable stainless-steel shielding covers. They contain a volume of the proper diluent, supplied by the Analytical Laboratory.

Adjacent to the dilution flasks, and on the same common center line, a U-shaped glass tube, designed for determination of specific gravity by a falling-drop method, is mounted. The tube is about 15 in. tall with legs of 1/4-in. and 1/2-in. tubing. When filled with a liquid immiscible with the sample and of known specific gravity and viscosity, the specific gravity of the sample solution may be determined by timing the descent, in the large-diameter leg, of a drop of known size. The small-diameter leg is used for emptying the tube by use of a water aspirator.

3. B-Type Sampler

B-type samplers were installed at the Purex Plant for use in sampling moderately radioactive process solutions (e.g., HCP, 2EW). Compared to

A-type samplers; less shielding is required at the sample station and larger sample sizes are handled. Neither the Hanford remote pipetter nor specific-gravity tubes are required.

3.1 General description

Like the A-type, the B-type sampler includes operating components and controls separated by the shielding barricades of a supporting structure. The operating components include the following:

(a) One or two jet assemblies practically identical with those described for A-type samplers (see A2.2, above).

(b) A device for the transfer of an approximately 5-ml. sample from the sample cup to a container for transportation to the laboratory. The use of bayonets was originally planned for this transfer; however, at the time of this writing the possible use of a recent development, the bayonet replacement sampler, was being studied.

(c) An in-line instrument facility, similar to those for A-type stations.

The supporting structure for the components described above is primarily of concrete, with separate pits for the sampler jets and valves, the sample cups, and an in-line instrument (which may or may not be installed). For the control of air-borne contamination, still allowing access through a door, the sample-cup pit is covered by a stainless-steel ventilating hood (connected to an exhaust system). The other pits are filled with shielding cover blocks. The thickness of concrete shielding provided at a B-type sampler station varies between 6 inches and over 3 feet.

3.2 Bayonet sampler

Original plans for B-type sampler operation included the use of a bayonet sampler for the transfer of samples from the sample cup. The bayonet sampler, shown in Figure XVIII-2, is a tubular pipette tip of Lucite, 1/2-in. O.D. and about 5-ml. capacity, the upper end of which is fastened (screwed connection) to a 1/2-in. O.D. stainless-steel rod (the tip holder). The upper end of the tip holder is fitted with a rubber stopper and, above this, a handle. In operation, the bayonet sampler is inserted into the sample cup riser; the rubber stopper forms a seal at the upper end of the riser with the lower (open) end of the pipette tip in position below the sample-cup operating liquid level.

Transfer of a sample from the sample cup to the pipette tip depends upon the equalization of a pressure differential between the inside of the pipette tip and the space above the liquid level in the sample cup. During a jet recirculation period, the pressure in the sample cup and in the pipette tip is negative. If the air to the jet is shut off, the

vacuum in the sample cup is broken; equalization of the pressure in the pipette tip causes transfer of the liquid sample. By alternately starting and stopping recirculation through the sample cup, the pipette tip may be flushed with the solution being sampled. However, since its lower end is drawn to a capillary, liquid will not flow from the pipette tip by gravity.

A portable shield, the sheath, is provided for transfer of the pipette to the laboratory. The sheath is a 1-in. O.D. stainless-steel tube, capped at the lower end with a sheath base (screwed and gasketed connection) and fitted at the upper end with a removable handle. With the bayonet inserted in the sheath from the top, a seal is formed between the bayonet stopper and the sheath. At the laboratory, the sample is transferred from the pipette tip to a removable insert in the sheath base by pulling a vacuum on the sheath, using a fitting provided for this purpose.

3.3 Bayonet replacement sampler(10)

At the time of this writing, the bayonet replacement sampler, a recently developed apparatus designed to reduce sampling costs and to improve radiation hazard control, was being evaluated for possible use in the Purex Plant as a replacement for bayonets. The bayonet replacement sampler, shown in Figure XVIII-2, is essentially an inverted J-shaped dip tube, the long leg of which is inserted to a point below the operating liquid level in the sample cup and the upper end of which is connected to a 5-ml. glass serum bottle, thereby holding the bottle in a vertical position at a convenient height above the sample cup. The entire assembly is rigidly held together by means of airtight screwed and gasketed joints; the dip tube and sample-cup riser are connected and the sample bottle is held in place by means of a sample bottle base (similar to a sheath base; see A3.2 above). During periods when the sampler is not being operated, the sample bottle and base are replaced by a permanent closure cap.

Operation of the bayonet replacement sampler is similar to that for the bayonet in that transfer of solution from the sample cup to the sample bottle depends upon the equalization of a pressure differential between these spaces (see A3.2, above). However, in the case of the bayonet replacement sampler, alternate starting and stopping of recirculation through the sample cup does not flush the sample bottle; since the bottle has no bottom outlet, it continues to be filled, instead. The condition of cyclic flow of liquid, then air, through the sample cup, corresponding to periods of relatively high and low pressures in this cavity, is characteristic of sampler jet operation using an air lift. (Normally, the gage pressure in the sample cup varies approximately between -5 and -20 in. of Hg.) Thus, with the bayonet replacement sampler in position, transfer of liquid to the sample bottle is effected during the course of a recirculation period (provided an air lift is used).

4. C-Type Sampler

C-type samplers were installed at the Purex Plant for use in sampling slightly radioactive (nearly "cold") process solutions (e.g., 2EU). Little or no shielding is required at the sample stations and sample sizes are relatively large, compared to those taken with A and B-type samplers.

A C-type sampler includes operating components and controls which are located in a stainless-steel sheet metal enclosure in the Sample Gallery, from which the necessary piping runs to a sampling point in a cell. The enclosure is supported by a pipe stand at a convenient operating height above the floor and is ventilated by connection to the sample-station exhaust system. Access for operation is through a hinged door.

C-type sampler operating components include the following:

(a) A 120-ml. (4-oz.) (nominal size) glass sample bottle fitted with flexible plastic-tube connections inserted in a two-hole rubber stopper.

(b) An air-operated jet (without sample cup) of the type described under A2.2, piped to pump liquids from the sampling point, via the sample bottle and back to the sampling point, using an air bleed.

Valves necessary for operation include one each in the sample bottle inlet and outlet lines, and one for control of air to the jet. Two samplers (R1 and R2) are equipped with pH instruments which are piped and valved for optional use in series with the sample bottle or alone.

5. P-1 Sampler

Three P-1 samplers and sample stations are used for sampling the Plutonium Sample Tanks, L9 and L10, and the sump in the L11 enclosure. Their design resulted from special efforts to curtail any possible splashing of plutonium solution and to control handling of the sampling equipment, thereby reducing personnel hazards and plutonium losses.

A P-1 sampler is similar to the C type in that the sampler suction piping is routed via a sample bottle fitted with a stopper. However, instead of a jet, a 100-ml. glass syringe is used for drawing the sample. The sample bottle, a glass tube (5-ml. capacity) protected by an outer Lucite tube and fitted inside a stainless-steel carrier, is supported inside a 12-in. cubical enclosure, fabricated from 1/4-in. Lucite with a stainless-steel base. Sampler piping, a single line of 1/8-in. stainless-steel pipe and tubing, and 1/8-in. I.D. Tygon tubing, is routed from the sampling point via a valve and the sample bottle to a point near the front of the enclosure where it may be connected to the syringe, located outside the enclosure. The sample bottle stopper is fixed rigidly inside the enclosure; the bottle may be raised or lowered, with respect to the stopper, by means of a screw-type jack operated from outside the enclosure. The enclosure is provided with an access door and is mounted on wall brackets.

6. Gas Samplers

Gas samplers are used by the Radiological Sciences Monitoring Unit for sampling process off-gases. The concentrations of radioactivity, in terms of particulate matter and radioactive gases, are determined by

analysis of components which are absorbed or filtered from a representative volume of the off-gas stream.

A gas sampler includes, primarily, a vacuum pump, for transfer of the off-gas sample from the sample point, and a filter and scrubber, in series, for removal of the components of interest. At the sample station in the Sample Gallery, the filter and scrubber are enclosed in a shielded and ventilated laboratory-type hood. Two separate sample stations (and hoods) are provided for taking samples from the (a) Dissolver off-gas system, and (b) the Vessel Vent and Condenser Vent Headers.

B. ANALYTICAL METHODS

1. Introduction

Presented in Tables XVIII-1 to XVIII-3, as discussed below, are brief outlines of the principal analytical methods available for use in determining the properties and components normally of greatest interest in Purex streams. The scope and limitations of each method are presented as an aid to operating personnel in the proper interpretation of laboratory results and in requesting determinations which will produce meaningful data. For each analytical method, the precision, accuracy, sample size, time required for analysis, and impurities known to affect the method (if any) have been listed, together with a brief description of the method.

As time passes, many of the methods described may be improved or replaced with new and better methods. Therefore, if the outlined methods do not meet a particular process-control requirement, Analytical Laboratory personnel or the current edition of the Hanford Analytical Manual(5) should be consulted.

2. Definition of Terms

In the outlines of the analytical methods on Tables XVIII-1 to XVIII-3 some special terms are used in certain specific senses. The following is an explanation of these special terms.

Sample size is the volume of sample actually required by the analytical method for a single determination with the indicated precision. (The relation between sample size and precision for radiochemical analyses is discussed under the explanation of "Precision", below.)

Precision is an indication of the reproducibility of an analytical method. In Tables XVIII-1 through XVIII-3 the precision figures indicate 99 per cent confidence limits (unless otherwise noted). In other words, in ninety-nine out of one hundred determinations run under the defined conditions statistical studies have shown the reported value does not vary from the mean value by more than the stated precision.

In general, the precision improves with increase in the amount of component to be determined. Thus, for the methods determined, values of precision are given for particular conditions of sample size and concentration.

For radiochemical methods precision may be limited by the radiation counting instrument but improves with increase in the total number of counts recorded. The following counting precision may be expected from the ASP, BGO, and GSC counters discussed in Subsection B5, below:

Total No. of Counts in Sample	Precision (99% Limits), %
66,000	±1
18,000	±2
2,600	±5
700	±10
170	±20

Systematic error is an expression of the accuracy of the analytical method in terms of the percentage disagreement of the average analysis from the absolute or "true" value.

Carrier is the term applied to the non-radioactive compounds which are added, in known and relatively large amounts, during radiochemical analyses for the purpose of separating or repressing a radioactive component present in low concentration by complexing or by coprecipitating.

Recovery is a measure of the percentage loss of a radioactive isotope during radiochemical analysis and is based on the calculated yield of a relatively large amount of a carrier material which is added. Analytical results are corrected for imperfect recovery before they are reported.

Time required for determination indicates the total elapsed time required for a single determination by the method indicated. Not included is the time required for transportation of the sample to the laboratory. Also, for duplicate analyses of a sample the time required is not doubled, but is usually approximately the same as for a single determination.

3. Physical Property Determinations

Methods for determination of disengaging time, uranium distribution ratio, flash point, specific gravity, rate of uranium transfer, and pH are outlined on Table XVIII-1.

4. Chemical Determinations

Outlined on Table XVIII-2 are the nature, application, and limitations of analytical methods for aromatics and olefins, dibutyl phosphate, ferrous iron, iron (total), nitric acid, sodium, sodium hydroxide, sodium nitrate, sodium nitrite, tributyl phosphate, and uranium.

5. Radiochemical Determinations

With the exception of uranium, radioactive components of Purex-Plant streams are normally determined by radiochemical methods. Outlined on Table XVIII-3 are methods for the determination of gross beta and gamma

activity; for plutonium, americium, and curium; as well as for radioactive cerium, cesium, iodine, niobium, ruthenium, and zirconium.

Radiochemical analyses are based on the use of radiation counting instruments for the measurement ("counting") of the radiation emitted by the components of interest. The types of radiation counting instruments used depend on the types of radiation which are counted, and include the Alpha-Simpson-Proportional (ASP), for alpha radiations; the Beta-Gamma Offner (BGO) for beta; and the Gamma Scintillation Counter for gamma radiations.

A radiation counting instrument utilizes a detecting device which, upon exposure to radiation from a sample, produces electrical impulses which are automatically counted, the number of counts per unit time being a function of the amount of the radioactive material present.

For the ASP and BGO, the detecting devices are ionization chambers, in which two electrodes, to which an electrical potential may be applied, are surrounded by an atmosphere of a normally non-conducting gas -- methane for the ASP and argon for the BGO. Ionization of the gas, resulting from passage of radioactive particles from the sample through the gas, allows the flow of pulses of current between the electrodes, which are recorded and counted.

The GSC detector is a thallium-activated sodium iodide crystal which upon exposure to gamma radiation emits light, activating a photoelectric cell and causing a current to flow. The current impulses are amplified and counted. In practice, an absorber (shield) is commonly placed between the sample and detector to increase the selectivity of the instrument for the radiations of interest; i.e., the effects of lower energy radiations or radiations of other types, such as those due to background, side reactions, impurities, etc., are minimized.

The conversion of instrument counts/minute to curies of radioactivity is dependent on the arrangement of the instrument detector relative to the sample, as well as on other considerations, as discussed in Chapter II. For example, the detector cannot "see" all points on the sample; the "geometry" of the instrument is the fraction of the total radiation field to which the detector is exposed. In addition, such effects as sample thickness, shielding by air or by instrument parts, side reactions dependent on the nature of the radiation, etc., must be considered. For alpha and beta radiations results are reported in counts/minute; because of the nature of gamma radiations, GSC results may be conveniently converted to microcuries ("countable").

The principal characteristics of the radiation counting instruments are tabulated below:

Radioactivity	Alpha	Beta	Gamma
Counting instrument	ASP	BGO	GSC
Detecting device	Ionization chamber (methane gas)	Ionization chamber (argon gas)	NaI crystal; Tl activated
Units for reporting	Counts/(min.)(gal.)	Counts/(min.)(gal.)	Microcuries/gal.
Instrument geometry, %	50	8 to 10	3.36

REFERENCES

(1) A. H. Bushey, Letter to L. M. Knights: Purex Analytical Methods. H.A.P.O. 11-11-53.

(2) ASTM Designation: D56-52, Flash Point by Tag Closed Tester. 1952 Book of ASTM Standards, Part 5, P. 1 (1953).

(3) ASTM Designation: D875-46T, Olefins and Aromatics in Petroleum Distillates. 1952 Book of ASTM Standards, Part 5, P. 326 (1953).

(4) G. C. Gabler, Letter to G. R. Graham: Sampling of Radioactive Solutions -- Building 202-A. H.A.P.O. 3-17-53.

(5) HW-24403 H.W. Analytical Manual for the Plutonium Separation and Metal Fabrication Processes. Author not stated. 8-1-52.

(6) HW-24741 Analytical Requirements for Purex Production Plant. R. E. Tomlinson. 7-9-52.

(7) HW-27090 A Method for the Analysis of Radionuclide Mixtures using a Gamma-Beta Scintillation Spectrometer. M. B. Leboeuf and R. E. Connally. 2-27-53.

(8) HW-30556 The Hanford Remote Pipetter. K. H. Hammill. 1-15-54.

(9) HW-30643 The Determination of Dibutyl Phosphate. D. W. Brite. 1-25-54.

(10) HW-31266 A Bayonet Replacement Sampler. W. N. Mobley (by J. W. Sowards). 3-18-54.

(11) KAPL-602 Equilibrium Data for Purex Systems. J. W. Codding, W. O. Haas, and F. K. Heumann. 11-26-51.

(12) H-2-2591 Capillary Tube and Bottle Sampler.

[redacted]

[redacted]

(13) H-2-52645 General Assembly - Shielded Type "B" Sampler.

(14) H-2-52675 Details - Sh. #2 - Type "B" Sampler.

(15) H-2-52677 Assembly and Detail - Bayonet Type "B" Sampler.

(16) H-2-52679 Assembly - Off Gas Sampling Hood.

(17) H-2-52681 Assembly - Ventilation Gas Sampling Hood.

(18) H-2-52690 General Assembly - Type "A" Sampler.

(19) H-2-52954 General Assembly - Type "C" Sampler.

(20) H-2-53187 Assembly - Type "C" Sampler with pH Meter.

(21) H-2-54769 Sub-Assembly - Gilmont Unit - Type "A" Sampler.

(22) H-2-54770 Sub-Assembly - Sampling Area and Cup Cover Lifting Mechanism - Type "A" Sampler.

(23) H-2-54780 Assembly and Details - PR Sample Box.

TABLE XVIII-1

PHYSICAL PROPERTY DETERMINATIONS

Property	Method[a]	Application	Description	Sample Size, Milliliters	Precision (99% Limits), Per Cent	Systematic Error, Per Cent	Time Required Per Determination, Minutes
Disengaging time[b]	Vibrational	Test of solvent or aqueous solutions for any undesirably high tendency to emulsify.	This is an as yet incompletely developed empirical test. The sample is contacted at controlled conditions in a pulse-type agitator (reciprocating perforated plates) with synthetic immiscible solutions of selected compositions and volumes. The time required for the interface to decrease to a thickness of approximately 1 mm. (indicating ease of phase disengagement) is measured. Interpretation of results generally requires comparison with a "standard" value obtained using laboratory synthesized solutions. For full response by the test to emulsifying tendency, it is sometimes necessary to make several contacts using extraction, scrub, and strip solutions, simulating Plant sequence.	15	Estimated ±10 to ±25	(Not applicable)	30
Uranium distribution ratio (K_D^o)	Batch contact ("C" type)	Test of solvent for any undesirable accumulation of impurities tending to impair ease of stripping uranium from it.	Using a pulse-type agitator, a solvent sample is given 1 contact with 1 M HNO_3, followed by 3 contacts with H_2O. The resulting solvent is given 1 contact with 0.8 g./l. UNH stock solution. Both phases are analyzed for uranium by fluorophotometer (see Table XVIII-2) and the distribution ratio is calculated.	2 to 5	Approximately ±30, dependent on fluorimeter.	Normally less than ±10, but dependent on uranium analysis.	90
Flash point	Tag Closed Cup[c]	Determination of flammability and explosiveness of virgin hydrocarbon diluent and recovered solvent.	The temperature of an organic sample in a closed cup is increased at a uniform rate while a carefully regulated test flame is intermittently introduced to the vapor space through a controlled opening. The temperature at which a distinct flash is produced over the sample is the flash point.	50	±1°F.	Approximately ±0.2°F.	30
Specific gravity	Falling Drop	Determination of specific gravity of solutions (aqueous, in practice) for which small sample size is advantageous, e.g., radioactive solutions such as HAF, HAW, etc.	Specific gravity is determined by measuring, at a known temperature, the length of time required for a carefully formed small drop of sample to pass through a fixed height of immiscible liquid, the viscosity and specific gravity of which are known.	0.005 per drop.	± 0.2 for average of 5 drops.	±0.02	20
Specific gravity	Pycnometer	Determination of specific gravity of "cold" or slightly radioactive aqueous or organic solutions, e.g., $Mn(NO_3)_2$, 2EU, 2EP, etc.	The weight of a known volume of sample at 25°C. is compared to the weight of an equal volume of water at 4°C.	2 to 5	±0.05 for aqueous samples; ±0.1 for organic samples.	±0.02	25
Rate of uranium transfer	Photometer	Detection of mass-transfer rate into or out of any aqueous or organic process solution.	The sample is repeatedly contacted for measured lengths of time at controlled conditions in a pulse-type agitator (reciprocating perforated plates) with a synthetic immiscible solution of a composition and volume corresponding to the Purex flowsheet; e.g., an HAF sample may be contacted with synthetic HAX, or an HAX sample may be contacted with synthetic HAF. After each contact the aqueous-phase uranium concentration is determined photometrically (see Table XVIII-2). The rate constant is calculated from a plot of contact time vs. uranium concentration.	1, for aqueous; 1.5, for organic.	±20	±0.06	30
pH	pH Meter	Determination of pH of any "cold" solution, e.g., ferrous sulfamate solution.	The pH is measured potentiometrically with a Beckman pH meter using a glass and calomel electrode. Organic solutions are first contacted with water, after which the pH of the aqueous phase is measured.	0.01	±0.01 pH unit.	Unknown.	10

NOTES: (a) Reference: Hanford Analytical Manual,[5] unless otherwise noted.
(b) Reference: Process Chemistry Unit, Chemical Development Sub-Section informal communication, December, 1954.
(c) Reference: ASTM designation D56-52.[2]

[redacted]

TABLE XVIII-2

CHEMICAL DETERMINATIONS

Component	Method[a]	Application	Description	Sample Size, Milliliters	Precision (99% limits), Per Cent	Systematic Error, Per Cent	Time Required per Determination, Minutes
Aromatics and olefins (combined)	Sulfonation[b]	Determination of combined aromatic and olefin content of virgin and recovered solvent. (Specified to be less than 1% by volume in virgin solvent.)	A measured volume of sample is sulfonated at a controlled temperature using 70% H_2SO_4 - 30% P_2O_5 solution. The volume of olefins and aromatics originally present equals the decrease in volume of the organic phase, corrected for the assumed solubility of organic in the aqueous phase.	10	±1	±1	30
Dibutyl phosphate	Disengaging Time[c]	Determination of dibutyl phosphate in all process solutions, at concentrations greater than 0.5 mg./l. for aqueous solutions, and greater than 5 mg./l. in organic solutions.	Under controlled conditions, zirconyl phosphate is added to the sample and the mixture is contacted with carbon tetrachloride. The concentration of dibutyl phosphate is calculated by comparing the time required for phase disengagement to standards.	0.4 (0.5 mg./l. DBP), for aqueous; 4 (5 mg./l. DBP), for organic.	±7 (95% limits)	Unknown	60
Ferrous iron	Titration	Determination of ferrous iron in aqueous solutions, e.g., ferrous sulfamate, 2DF, 1RX. Reducing agents, in general, will interfere, although sulfamic acid may be tolerated.	Fe^{++} is titrated to Fe^{+++} in acidic solution with ceric sulfate, using Ferroin indicator. Correction for an indicator blank is included in the calculation of results.	0.01 (0.7 g./l. Fe^{++})	±2	0	30
Iron, total	Titration	Determination of total iron in aqueous solutions.	Fe^{+++} is reduced to Fe^{++} by use of an agent such as hydroxylamine and ferrous iron is determined by titration (see above). Correction for the addition of a reductant is made by determination of a blank.	0.01 (0.7 g./l. Fe)	±2	0	30
Nitric acid	Coulometric oxalate titration	Determination of HNO_3 at concentrations above 0.5 M in aqueous solution, in the presence of appreciable concentrations of U or Pu (U concentrations up to 7 M), e.g., 1AF, 2AF.	Uranyl and plutonium nitrate in the sample are complexed with oxalate ion and precipitated with isopropyl alcohol. The acid oxalates are soluble in the alcohol. The nitric acid is titrated with an electrically generated base using a pH indicator for the end point. Correction for an indicator blank is included in the calculation of results.	0.01 (0.5 M HNO_3, or greater).	±5	0	20
Nitric acid	Oxalate Complexing	Determination of HNO_3 at concentrations of 0 to 1 M, approximately, in the presence of various interfering ions, such as uranium, plutonium, and aluminum, in aqueous or organic solutions, e.g., 2RP.	Interfering ions must first be removed or obviated; e.g., chromium is removed by precipitation as lead chromate; uranium, plutonium, and aluminum are complexed with potassium oxalate. Nitric acid concentration is determined by potentiometric titration with sodium hydroxide. Organic samples are contacted with water and the aqueous phase is analyzed.	0.5 (0.1 M HNO_3)	±1 g./l.	0 to -2	30, in absence of interfering ions. 45, in presence of interfering ions.
Nitric acid	pH Measurement	Determination of HNO_3 at concentrations of 0.005 to 0.5 M, approximately, in aqueous solutions containing no more than one hydrolysable component at a known concentration, e.g., Metal Solution Storage samples.	The pH of the sample is measured on a Beckman Model G pH meter and the acid concentration is read from standard calibration curves. The approximate concentration of the hydrolysable component must be known.	0.05	Unknown, the pH meter may be read to ±0.015 pH units.	Dependent on the concentration of the hydrolysable component.	15
Nitric acid	Potentiometric Titration	Determination of HNO_3 at concentrations of 0.01 to 17 M, approximately, in aqueous solutions free of interfering ions, e.g., HAIS, 2RX.	Samples are titrated potentiometrically with a standard sodium hydroxide solution using a Beckman pH meter, Model E-2 Macro Electrode. The free acid is calculated from the resulting titration curve.	0.5 (0.1 M HNO_3)	± 0.01 pH units	Unknown	20
Sodium	Flame Spectrophotometer	Determination of sodium at concentrations greater than 0.01 g./l. in water. The composition of the sample with respect to other components must be known approximately.	The sample is atomized and introduced at a carefully controlled rate into a flame where it is ignited giving off the characteristic yellow sodium color. The intensity of light emission at a wave length of 584 millimicrons is measured with a spectrophotometer and compared with the intensity from a standard sodium solution, the composition of which with respect to other components is approximately the same as the sample.	5 (0.1 mg./ml. Na)	±10	±1	15
Sodium hydroxide	Direct Titration	Determination of "excess caustic" in aqueous solutions, e.g., concentrated neutralized waste.	The sample is titrated with standard nitric acid using thymol blue indicator. The sodium hydroxide content above that necessary for a pH of 9.6 is calculated as "excess caustic".	0.1	±1.3	0	20
Sodium nitrate	Specific Gravity	Determination of sodium nitrate in "cold" aqueous solutions in the absence of other solutes, e.g., 26% $NaNO_3$ solution.	The specific gravity of the sample is determined by the pycnometer method (see Table XVIII-1). The sodium nitrate composition is determined from a plot of concentration vs. specific gravity.	2 to 5	±0.05	±0.02	25
Sodium nitrite	Colorimetric[d]	Determination of sodium nitrite in the presence of uranium and acid in aqueous solutions, e.g., HAF, 2AF.	Nitrite in the sample is converted to methyl nitrite which is distilled into an absorber containing a color-producing reagent. The intensity of the color developed is measured spectrophotometrically and the result compared with standards.	0.025 (0.9 g./l. NO_2^-)	±10	0	15
Sodium nitrite	Titration	Determination of sodium nitrite in the absence of any interfering ions in "cold" aqueous solution, e.g., 10% $NaNO_2$ solution.	The sample is acidified and titrated with standard permanganate to the end point.	0.1	±7	0	15
Tributyl phosphate	Dielectric Constant	Determination of TBP in samples of solvent, e.g., solvent storage.	The dielectric constant of TBP-diluent mixture, which is measured on a Sargent oscillometer, is related by a calibration curve to the TBP concentration. Interfering solutes are eliminated by carbonate washing prior to the determination.	10 (30 vol.% TBP in diluent)	±2.1	0	30
Tributyl phosphate	Infrared Absorption	Determination of TBP in samples of solvent containing more than 4 per cent TBP, e.g., solvent storage. Over extended operating periods, the results (obtained by spectrophotometer) may "drift", resulting in large systematic errors until the error is corrected by checking standard samples.	After removal of interfering impurities, such as by carbonate washing, the sample is placed in a cell and a fixed-wave length (9.70 microns) infrared light is passed through a known depth. Absorption of light by the sample is compared with absorption by standard solutions, as measured by infrared spectrophotometer.	5 (30 vol.% TBP in diluent)	±2	±1 for a single run. Up to ±10 due to "drift".	20
Tributyl phosphate[e]	Specific Gravity	Determination of TBP in "cold" or slightly radioactive solvent samples, generally in the absence of other solutes. However, approximate corrections may be applied for the presence of dissolved water, UN, and HNO_3. The diluent specific gravity, as well as the concentrations of UN and HNO_3, must be known.	The specific gravity of the sample is determined by the pycnometer method (see Table XVIII-1). The TBP concentration is calculated by use of equations relating concentration to specific gravity.	2 to 5	±0.05 in the absence of interfer solutes. Unknown in the presence of interfering solutes.	Estimated to be ±3 or less for TBP concentrations of approximately 50 vol.% or less, depending on the concentration of UN and HNO_3.	25
Uranium	Coulometric Titration	Determination of uranium in aqueous solutions at concentrations not less than 1 g./l., e.g., HAF, 2RF, 2RU.	The uranium in the sample, and iron which is added as a catalyst, are reduced to the quadrivalent and bivalent states, respectively. A constant current is passed through the solution in a coulometer cell until a potentiometer "break" occurs, indicating conversion of U (IV) to U (VI). The length of time the current flows before the "break" occurs depends on the uranium concentration of the sample. Interfering nitrate ion is initially removed by boiling the sample with hydrobromic acid.	1 (1 to 10 mg. of U)	±5	±1	45
Uranium	Specific Gravity	Determination of uranium in aqueous solutions, e.g., HAF, 1AF. The method is generally restricted to samples in which the concentration of uranium is approximately 1 M, or greater and in which the concentrations of other solutes (except for HNO_3) are relatively small (e.g., HAF) because of the effects of these variables on the accuracy.	The specific gravity of the sample is determined by the Falling Drop method (see Table XVIII-1). The result is calculated making any necessary correction for HNO_3, the concentration of which must be known approximately.	0.005 per drop.	±0.2 for average of 5 drops.	±0.02	20
Uranium	Fluorophotometer (Fluorimeter)	Determination of uranium at concentrations of 0.0005 to 0.5 g./l. of U in aqueous or organic solutions. In practice, results are often reported for concentrations down to 0.0001 g./l. of U, but with considerably less accuracy than that shown.	Uranium compounds fused with sodium fluoride fluoresce upon exposure to ultraviolet light, the intensity of fluorescence being proportional to the amount of uranium. A 365-millimicron ultraviolet light is directed on a fused sample and the intensity of the fluorescent light passing through a filter (555 millimicrons) is measured. High concentrations of compounds not volatilized during the fusing operation absorb ("quench") a portion of the fluorescent light. Since a given amount of an interfering compound absorbs a fixed percentage of the uranium fluorescence, the result may be corrected for quenching if a second portion of the sample is spiked with uranium and analyzed. Organic samples are initially stripped with water and the resulting aqueous phase is analyzed.	0.05 (0.0005 to 0.5 mg./l. of U)	±20	0 to ±10 due to "drift".	45
Uranium	X-Ray Photometer	Determination of uranium at approximate concentrations of 2 to 500 g./l. in aqueous or organic solutions, e.g., 2RF, 2RU, 1RO. Restricted to samples containing an appreciable concentration of a single element of high atomic number.	X rays are passed through a fixed depth of sample solution and a portion of the beam, depending on the concentration of high atomic-number elements (e.g., uranium) in the sample, is absorbed. The same X rays are passed through varying known thicknesses of aluminum which have been calibrated against known standard uranium concentrations until the absorption of the aluminum matches the sample absorption.	3 (2 to 50 g./l. of U)	±2	0	20

NOTES: (a) Reference: Hanford Analytical Manual[5] unless otherwise noted. (b) Reference (3). (c) Reference (9). (d) Reference (1). (e) Reference (11).

[redacted]

[redacted]

TABLE XVIII-3

RADIOCHEMICAL DETERMINATIONS

Component	Method[a]	Application	Description[b]	Sample Size,[c] Milliliters	Precision (99% limits), Per Cent[c]	Systematic Error, Per Cent	Time Required per Determination, Minutes
Americium-curium	Cerium Fluoride Precipitation	Determination of americium-curium, together, in liquid samples containing no amphoteric ions (such as aluminum), e.g., metal solution storage. Plutonium does not interfere.	Americium and curium are quantitatively removed from solution as fluorides precipitated with a cerium fluoride carrier. The precipitate is washed, dried, mounted on a platinum disk, and counted on a standard alpha counter. Interference by plutonium is prevented by its initial oxidation to a soluble form (Pu(VI)) with excess ceric sulfate.	0.015 (for a sample, e.g., metal storage solution, containing approx. 10^5 counts/(min.)(ml.) Am-Cm).	± 10	-2	40
Cerium, cesium, iodine, niobium, ruthenium, zirconium (Ce^{144}, Ce-Pr^{144}, Cs^{137}, I^{131}, Ru^{103}, Ru-Rh^{106}, Zr-Nb^{95})	Gamma-Beta Ray Scintillation Spectrometer (GRS)	The gamma-emitting components listed may be determined individually or as mixtures, quantitatively or qualitatively, in gas, liquid, or solid samples; e.g., IAF, 2EW, etc. Detection of components is limited to those contributing roughly 5% or more of the total activity of a fission-product mixture. Activity limits for quantitative analysis of a single constituent are from approximately 0.01 to 4 microcuries.	The GRS is basically a gamma scintillation counter (GSC) which electrically differentiates between the characteristic gamma-ray energies emitted by specific fission products by means of a pulse height analyzer. From the automatically recorded plot of the activities at different energies, the analytical results may be calculated. Prior to analysis, the sample is mounted on a stainless steel disc and dried, if possible.	0.05 (for IAF)	± 10	0	60
Cerium, zirconium-niobium	Radiocerium, Radioniobium, and Radiozirconium	Determination of cerium, individually, and zirconium-niobium, together, in any aqueous sample, e.g., IAF. Interference by ruthenium is corrected by analyzing separately for that element. With the counting method used, thorium interference is negligible.	Cerium and the ceric sulfate carrier are maintained soluble by reduction with ferrous iron while zirconium and niobium are removed (with a carrier) by precipitation with iodic acid. The cerium is then oxidized with sodium bromate and precipitated as the iodate. Both precipitates, mounted on stainless-steel discs and dried, are counted; zirconium and niobium, on the GSC through an 8.9-g./sq.cm. lead absorber; cerium, on the Beta-Gamma-Offner Counter (BGO) through a 25-mg./sq.cm. gold absorber.	Sufficient Ce to give approximately 1000 counts/min. beta. Sufficient Zr-Nb to give approximately 100 counts/min. gamma.	± 25	± 50	270, for determination of Ce and Zr + Nb.
Cesium	GRS	See cerium by Gamma-Beta Ray Scintillation Spectrometer (GRS) method.					
Gross beta	Beta-Gamma-Offner Counter (BGO)	Determination of total countable beta radiation (0.5 M.e.v. or above) in any liquid sample. (Gamma radiation may also be counted on the BGO, but usually a GSC is used.)	The sample is mounted on a stainless-steel disc, dried, and counted, using a BGO counter with a 25-mg./sq.cm. gold or platinum absorber between the sample and the detector. The absorber is used to discriminate against U-237 and Pu X rays.	0.025 (for a sample, e.g., HAF, containing approx. 5×10^7 counts/(min.)(ml.) beta).	±4 to ±10	± 10	45
Gross gamma	Gamma Scintillation Counter (GSC)	Determination of total countable gamma radiation in all liquid samples.	The sample is mounted on a stainless-steel disc, dried, and counted on a GSC. A 1.7-g. lead/sq.cm. absorber between the sample and detector precludes counting beta radiation. Gamma energies 0.35 M.e.v., or less, which are characteristic of impurities such as U-237 or I-131, are discriminated against electrically or by use of additional absorbers.	0.025 (for a sample, e.g., HAF, containing approx. 7×10^4 microcuries/ml. gamma).	±1 to ±20	± 5	45
Iodine	GRS	See cerium by Gamma-Beta Ray Scintillation Spectrometer (GRS) method.					
Iodine	Continuous Extraction	Determination of iodine in aqueous samples.	Iodine is extracted into carbon tetrachloride and back-extracted into sodium bisulfate solution. After reduction of the higher valence forms, the iodine is precipitated as silver iodide. The gamma activity of the precipitate is counted on the GSC.	Sufficient to contain approx. 0.015 to 1×10^5 microcuries/ml.	± 2	± 15	90
Niobium	GRS	See cerium by Gamma-Beta Ray Scintillation Spectrometer (GRS) method.					
Niobium	Radioniobium	See cerium by Radiocerium method.					
Plutonium	Direct Evaporation	Determination of plutonium in liquid samples containing little or no uranium, e.g., 2AW, 2BW. Unless initially separated, large percentages of nonvolatile salts interfere, because of alpha absorption.	The sample, with a precipitate of lanthanum fluoride to insure uniform distribution of plutonium is dried and flamed on a platinum disc, and counted with an Alpha-Simpson-Proportional Counter (ASP). Correction is made for interference due to alpha absorption by lanthanum fluoride.	0.05 (for a sample, e.g., IAF containing approx. 0.15 g./l. Pu).	± 20	0	45
Plutonium	Fluoride Precipitation	Determination of plutonium, at low concentrations, in liquid samples high in uranium concentration and containing no aluminum, e.g., IEU.	Any Pu (VI) in the sample is reduced with hydroxylamine after which the total plutonium content is separated from interfering ions (e.g., uranium) by means of a double precipitation of plutonium with lanthanum fluoride as a carrier. The final precipitate is mounted on a platinum disc, dried, and counted on an ASP counter. Correction is made for interference due to alpha absorption by lanthanum fluoride. Aluminum in the sample interferes because of competition with lanthanum for fluoride ions. Acetone is added to organic samples to increase their solubilities in water.	0.5 (for a sample, e.g., IEU, containing approx. 4×10^{-4} g./l. Pu).	± 20	-5	180
Plutonium	Lanthanum Hydroxide	Determination of plutonium in aqueous samples containing appreciable concentrations of amphoteric ions, which would compete with lanthanum during a lanthanum fluoride precipitation and a relatively minor concentration of uranium, viz., coating waste containing aluminum.	Plutonium is separated from interfering ions by precipitation with lanthanum hydroxide carrier. The hydroxide precipitate is dissolved in acid and aliquots are mounted on platinum discs, dried, flamed, and counted on an ASP counter. For samples of coating waste, interference by uranium as an alpha emitter or absorber is negligible; for other samples a separation of uranium from plutonium might be required. Correction is made for the interference due to alpha absorption by lanthanum hydroxide.	0.1 (for a sample, e.g., coating waste, containing approx. 2.5×10^{-4} g./l. Pu).	± 20	-3	150
Plutonium	TTA (thenoyl trifluoroacetone) Extraction	Determination of total plutonium or Pu(VI), at low centrations, in aqueous samples, e.g., HAW, IWW, 2EU.	Unextractable polymeric plutonium is converted to the nitrate by treatment with nitric acid. To determine total plutonium Pu(IV) and Pu(VI) are reduced with hydroxylamine to Pu(III) which is oxidized with sodium nitrite to Pu(IV), the only valence form extractable with TTA. After extraction with TTA, the organic phase is mounted on a platinum disc, dried, flamed, and counted on an ASP counter. Pu(VI) is determined by making a second determination in which the reduction step is eliminated, and subtracting the result from the total plutonium.	0.05 (for a sample, e.g., IAW, containing approx. 2.5×10^{-4} g./l. Pu).	± 10	-5	60, for total Pu 90, for Pu(VI)
Ruthenium	GRS	See cerium by Gamma-Beta Ray Scintillation Spectrometer (GRS) method.					
Ruthenium	Direct Reduction	Determination of ruthenium in any Purex sample.	A known amount of inactive ruthenium carrier is added to the sample. Ruthenium in the sample is reduced to the metal with magnesium in a strong hydrochloric acid solution. The ruthenium metal is separated, dried, and counted on a BGO. Only the "hard" beta emission (3.5 M.e.v., or greater) passing through a 25-mg./sq.cm. gold absorber is measured. The effect of interference by zirconium and cerium is minimized by the addition of "hold back" carriers to the sample so that only a small percentage of these elements are carried with the ruthenium.	0.05 (for a sample, e.g., HAF, containing approx. 5×10^7 counts/(min.)(ml.) total beta).	± 10	+ 20	30
Zirconium	GRS	See cerium by Gamma-Beta Ray Scintillation Spectrometer (GRS) method.					
Zirconium	Radiozirconium	See cerium by Radiocerium method.					

NOTES: (a) Reference: Hanford Analytical Manual.[5] (b) Operating principles of radiation counting instruments are discussed under B5 of the text. (c) A correlation between number of counts and precision is shown under B2 of the text.

[redacted]

[redacted]

DRAWING OFFICIAL USE ONLY

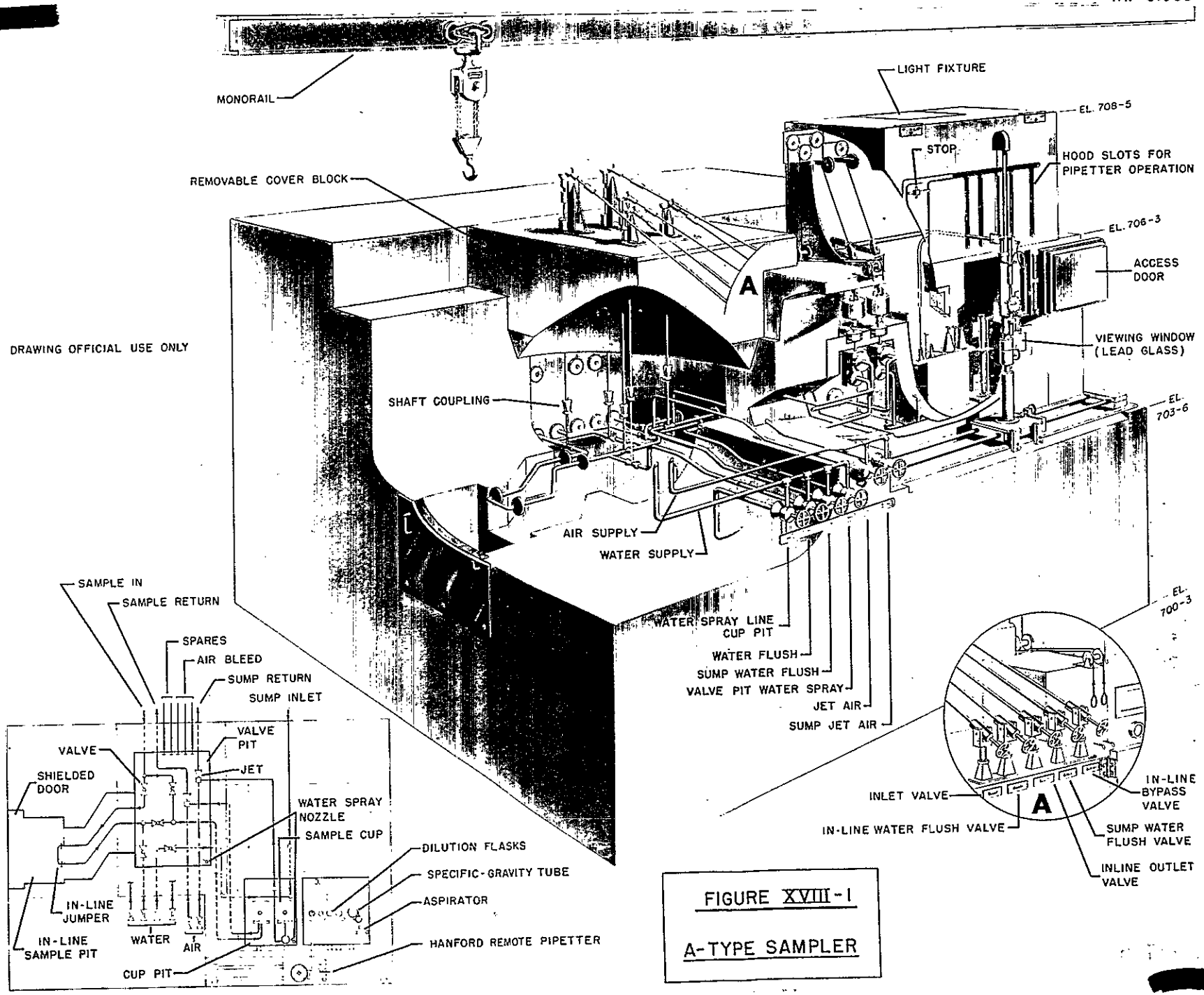

FIGURE XVIII-1

A-TYPE SAMPLER

[redacted]

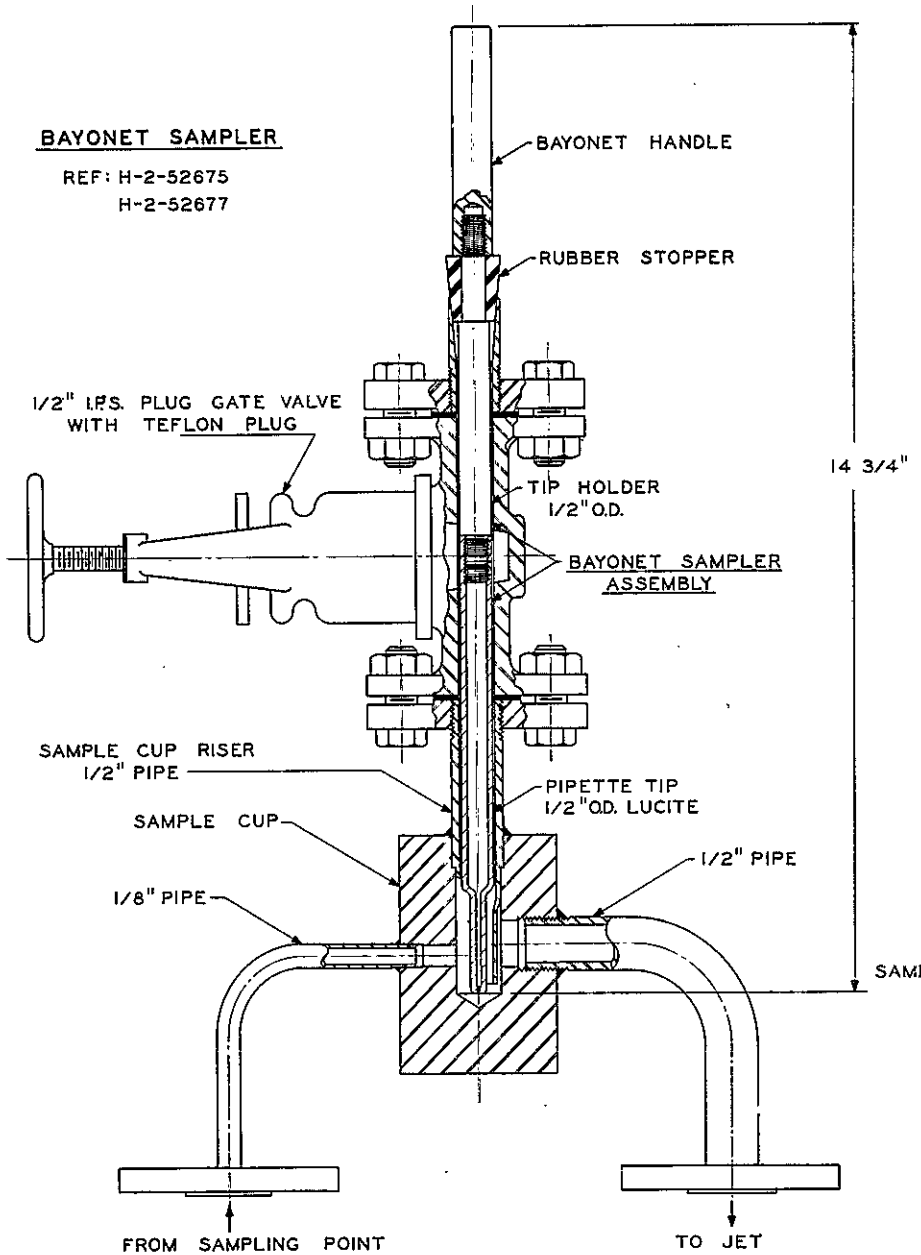

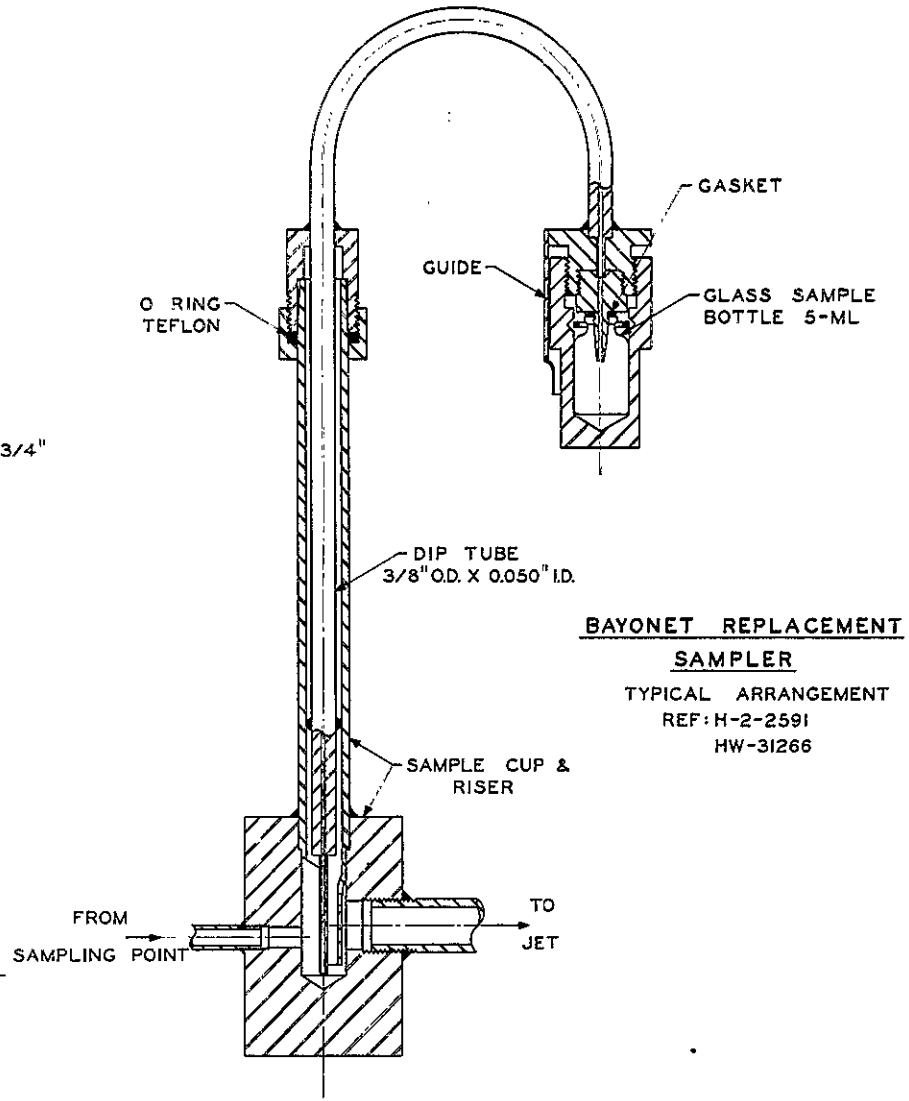

FIGURE XVIII-2
SAMPLING DEVICES
FOR B-TYPE SAMPLE CUPS

PART V: SAFETY

CHAPTER XIX. HEALTH PROTECTION FROM RADIATIONS

CONTENTS

	Page
A. NATURE OF RADIATIONS	1902
1. Alpha Particles	1902
2. Beta Particles	1902
3. Gamma Rays	1903
B. CURRENT PERMISSIBLE RADIATION EXPOSURE LIMITS	1903
1. Definition of Terms	1903
2. External Radiation Exposure Limits	1904
2.1 General body exposure	1904
2.2 Exposure of hands and forearms only	1905
3. Maximum Allowable Concentrations of Radioisotopes	1905
4. Personnel Contamination Limits	1907
5. Surface Contamination Limits	1907
5.1 Radiation Zones	1907
5.2 Non-regulated areas	1907
C. METHODS OF MONITORING	1907
1. Monitoring of Operating Areas and Equipment	1907
2. Monitoring of Personnel	1909
3. Ventilation Air Monitoring	1912
4. Stack Gas Monitoring	1913
5. Environs Monitoring	1914
D. EFFECTS OF RADIATION ON THE BODY	1914
REFERENCES	1918

CHAPTER XIX. HEALTH PROTECTION FROM RADIATIONS

It is beyond the scope of this chapter to present a comprehensive coverage of this highly important subject. For detailed background coverage the reader is referred to the references listed at the end of this chapter, and for up-to-date authoritative Hanford standards, to the Manual of Radiation Protection Standards issued and maintained current by the Radiological Sciences Department. The careful and detailed planning for protection of personnel from radiations in the Purex Plant reflects current Hanford radiation protection standards. The principles followed in the protection of personnel from radiations by shielding are discussed in Chapter XX. The present chapter deals with the hazards of radiation and with personnel protection methods other than shielding.

A. NATURE OF RADIATIONS[9]

Nuclear radiations are invisible and undetectable by the unaided senses. There are two general types of nuclear radiations: (a) bits of matter which comprise some of the building blocks of atoms (neutrons, alpha, and beta particles), and (b) electromagnetic waves of the same general type as light and heat, but of extremely short wave length -- the gamma and X rays. The radiations emitted in the chemical separations processes are alpha, beta, and gamma. Neutrons, which for practical considerations are emitted only during the pile reaction, will not be discussed in this chapter.

1. Alpha Particles[13]

Alpha particles are ejected spontaneously by the nuclei of uranium and plutonium atoms, but not by fission-product elements. They are identical with the nuclei of helium atoms and thus have a mass of four with a positive charge of two. Because of the large mass and charge of these particles, their penetrating power is very low. The alpha emitters encountered in the Purex process have a maximum energy of about 6 M.e.v. Particles with an energy of 5 M.e.v. have a range of 3.48 cm. in air and 0.0037 cm. in tissue.[14] A very small thickness of almost any material such as a thin sheet of paper, a film of water, or the outer layer of skin will completely stop alpha particles. Ionization from alpha particles external to the body is not a problem in the H.A.P.O. separations plants. However, because alpha particles produce an extremely dense path of ionization before being stopped (one alpha particle may produce from 100,000 to 150,000 ion pairs), it is vitally important to prevent alpha emitters from entering the body.

2. Beta Particles

Beta particles are high-energy electrons emitted in the decay of radioactive nuclei. They carry a negative charge of one unit and have velocities ranging up to 0.99 times that of light. Their corresponding energies range from zero up to several million electron volts. Some materials may emit beta rays with energies up to 11 or 12 M.e.v.,

but energies above 2 to 3 M.e.v. are rare. Two-M.e.v. beta particles have a range of 700 cm. in air and are completely stopped by 0.9 cm. of water or tissue or 0.08 cm. of lead. The higher-energy beta particles can penetrate to the germinal layer of the skin and cause moderate to severe burns; thus, beta radiation is hazardous when the observer is directly exposed or when the emitter is taken into the body. The electrons are, under some conditions, absorbed with the formation of X-ray photons in a process known as Brehmsstrahlung ("slowing-down radiation"). Under exceptional circumstances involving high-energy beta particles this secondary radiation may also be a hazard.(5)

3. Gamma Rays

Gamma rays are a form of electromagnetic radiation similar to X rays and have a wave length roughly one-millionth that of visible light. They penetrate matter to a much greater extent than alpha and beta particles. A beam of gamma rays loses intensity exponentially along its path, and so is not considered to have a definite limit or range. However, one frequently uses the term tenth-value-layer which is the thickness of the medium required to reduce the intensity ten-fold. For gamma radiation of 2-M.e.v. energy, the intensity of radiation is reduced ten-fold by 1.8 inches of lead, or 2.7 inches of steel, or 19 inches of water. The same ten-fold reduction for this energy level gamma ray would require 1300 feet of air.(10) Gamma rays lose energy as they traverse matter. This energy appears in the form of liberated electrons; hence the term "ionizing radiation". Even though the ionization power of gamma rays is roughly one-thousandth that of alpha particles,(2) gamma rays are a major problem because they penetrate so deeply.

B. CURRENT PERMISSIBLE EXPOSURE LIMITS

An effective program of radiation control is based on knowledge of what quantities and rates of exposure may be permitted. The permissible radiation exposure limit is the quantity of radiation which under any combination of circumstances is not expected to cause appreciable bodily injury to the average normal individual at any time during his lifetime.(12) Because of the lack of full, exact knowledge, the permissible exposure limits include a factor of safety and are frequently reviewed in light of new information. The safety factors involved are quite often not exactly known. In some cases they may be quite large; in others, just adequate.

1. Definition of Terms

A roentgen (r.) is a quantity of X or gamma radiation such that the associated corpuscular emission per 0.001293 gram of air produces, in air, ions carrying one electrostatic unit of quantity of electricity of either sign. (Note: 0.001293 gram is the mass of one cu.cm. of dry atmospheric air at 0°C. and 760 mm. Hg pressure.) This unit of dose corresponds to the absorption of about 83.8 ergs/gram of air.(12)

A rep (a term coined from the initials of "roentgen equivalent physical") represents an energy absorption dose in irradiated tissue of 93 ergs per gram.(12)

A rad corresponds to an absorbed dose of 100 ergs per gram of matter.(5) By agreement at the International Congress of Radiology, 1953, this new arbitrary unit to express dose of ionizing radiation was established. The unit "rep" is to be replaced throughout by the unit "rad" and is defined here only for reference to previous literature.

A rem (roentgen equivalent man, or mammal) is that dose of any ionizing radiation which produces a relevant biological effect equal to that produced by one roentgen of high-voltage (about 0.4 M.e.v.) X radiation, other exposure conditions being equal. The use of the rem is a convenient shorthand method for adding exposure from mixed radiations. Due recognition must be given to the relative biological effectiveness of the various radiations. For the chronic exposures, the mixed radiations may be added in terms of rems according to the following scale of relation:(12)

X rays or gamma rays	1 r. $\Leftrightarrow$	1 rad = 1 rem
Beta particles		1 rad = 1 rem
Alpha particles		1 rad = 20 rems

A curie is defined as that quantity of a radioactive element which undergoes 3.7×10^{10} disintegrations per second. This definition refers to disintegrations occurring and not to the number of particles emitted per second. For example, one curie of a radioelement, disintegrating at a rate of 3.7×10^{10} atoms per second, may emit directly and indirectly (i.e., through daughter elements) several times 3.7×10^{10} particles per second. Furthermore the particles will frequently include alphas, betas, and photons. Conventional instruments for measuring radioactivity count the number of particles rather than the number of atoms disintegrating per unit of time. Furthermore, due to counting efficiencies being much less than 100 per cent, these conventional instruments do not count all of the particles being emitted and appropriate corrections must be made to the number of particles counted to estimate the total number of particles being emitted. Factors which influence the magnitude of the counting efficiency correction are discussed further in Chapter II.

2. External Radiation Exposure Limits

Current radiation exposure limits or protection limits in effect at Hanford are summarized below along with simplified discussions of the bases for these limits. For a fuller understanding of these bases, the reader is referred to dissertations in References (4) and (14).

2.1 General body exposure

The recommendations relating to exposure from external radiation are primarily based on exposure of the whole body. The amount of radiation received by certain critical tissues forms the basis for these recommendations. For gamma radiation the critical tissues are probably the blood-forming tissues (i.e., bone marrow) nominally considered to

be at a depth of 5 cm., the gonads, and the eye lenses. The protection limit is 0.3 roentgen per week measured in free air with a radiation-field measuring instrument such as a CP meter.(14)

The critical tissues for high-energy beta radiation (up to 3 M.e.v.) * are probably the superficial tissues of the skin, assumed to be lying at a depth equivalent to 7 mg./sq.cm. The maximum permissible beta radiation exposure of the entire body is 0.5* rad per week in the basal layer of the epidermis, corresponding to 0.3 rad per week within the body. However, in practice, beta radiation is almost always accompanied by gamma radiation. For such a combination it is difficult to predict which tissues (the skin or the blood-forming organs) become critical.(2) For this reason, when both beta and gamma radiation are present the maximum permissible limit is 0.3 rad per week measured in free air. The beta and gamma components are considered additive.

Since alpha particles ordinarily do not penetrate more than one to two inches of air and are completely absorbed by as little as 1/30 mm. of tissue or one protective layer of clothing, they are not normally considered in determining external-radiation exposure limits. The maximum allowable dose within the body has been set at 0.015 rad (0.3 rem) per week.

2.2 Exposure of hands and forearms only

In the case of exposure of only the hands and forearms, the basal layer of the epidermis (rather than the bone marrow) is considered the critical tissue for both beta and gamma radiation. For this reason, the protection limit in this special case is 1.5 rads per week, the gamma and beta components being considered additive.

3. Maximum Allowable Concentration of Radioisotopes

The permissible concentration levels of radioisotopes in air and water are, in most cases, based on an allowable exposure of 0.3 rem per week to any part of the body except the epidermal skin layer. The following table represents the continuous exposure limits for various radioelements (listed in order of their atomic number) which are of concern in the Purex Plant:(4)

---

*) Revision of this maximum to 0.6 rad per week was under consideration at the time of writing.

[redacted]

Radioisotope	Critical Organ and Its Weight in Kg.		Microcuries Allowed in Total Body	Maximum Allowable Concentration(4)*, Microcuries/Cu.Cm. In Air,	In Water,
Sr^{89}	Bone,	7	2	2×10^{-8}	7×10^{-5}
Sr^{90} - Y^{90}	Bone,	7	1	2×10^{-10}	8×10^{-7}
Y^{91}	Bone,	7	15	4×10^{-8}	0.2
Nb^{95}	Bone,	7	90	4×10^{-7}	4×10^{-3}
Ru^{106}-Rh^{106}	Kidneys,	0.3	4	3×10^{-8}	0.1
Te^{129}	Kidneys,	0.3	1.3	4×10^{-8}	10^{-2}
I^{131}	Thyroid,	0.02	0.3	3×10^{-9}	3×10^{-5}
Xe^{133}	Total body,	70	300	4×10^{-6}	4×10^{-3}
Xe^{135}	Total body,	70	100	2×10^{-6}	1×10^{-3}
Cs^{137}-Ba^{137}	Muscle,	30	90	2×10^{-7}	1.5×10^{-3}
Ba^{140}-La^{140}	Bone,	7	5	6×10^{-8}	2×10^{-3}
La^{140}	Bone,	7	24	10^{-6}	1
Ce^{144}-Pr^{144}	Bone,	7	5	7×10^{-9}	4×10^{-2}
Pr^{143}	Bone,	7	29	7.5×10^{-7}	0.4
Pm^{147}	Bone,	7	120	2×10^{-7}	1
U natural (insoluble)	Lungs,	1	0.009	1.7×10^{-11}	
U natural (soluble)	Kidneys,	0.3	0.2	1.7×10^{-11}	7×10^{-5}
Pu^{239} (insoluble)	Lungs,	1	0.008	2×10^{-12}	
Pu^{239} (soluble)	Bone,	7	0.04	2×10^{-12}	1.5×10^{-6}
Mixed F.P.'s	---		---	10^{-9}	10^{-7}
Mixed alpha emitters	---		---	2×10^{-12}	10^{-7}

*) NOTE:

These maximum allowable concentrations are periodically reviewed and revised. The reader is cautioned to consult the Radiological Sciences Department for the latest authoritative limits.

4. Personnel Contamination Limits

The maximum permissible contamination levels on skin or clothing or protective equipment removed from a radiation zone ("release limits") are 500 disintegrations/minute for alpha contamination and 100 counts/minute for combined beta and gamma contamination.[13, 11] These contamination limits coincide with the approximate detection thresholds for standard radiation counting instruments.

5. Surface Contamination Limits

5.1 Radiation Zones

A Radiation Zone is defined as an area or item of equipment where the radiation level exceeds 1 mrem/hr., or where there is detectable surface contamination, or where airborne contamination exceeds 1/10 of the applicable permissible limit.[12] All entry into Radiation Zones is in accordance with conditions specified in Standard Operating Procedures or Special Work Permits. These permits clearly define the work which will be performed, the protective clothing to be worn, the radiation survey findings, and the time limits. Special Work Permits and Standard Operating Procedures are issued jointly by the Radiation Monitoring, operating, and servicing groups involved.

5.2 Non-regulated areas

No detectable contamination, as monitored by the Poppy and GM-type instruments is permissible.

C. METHODS OF MONITORING

Various elaborate provisions in building and equipment design and in equipment operation have been made to protect personnel from the hazards of radiation. In addition to these safeguards it is considered necessary that a thorough and constant program of radiation monitoring be maintained to prevent accidental over-exposure or contamination of personnel and contamination of surroundings.

The chief items requiring constant and routine monitoring can be broken down into five main categories: (a) operating areas and equipment, (b) personnel, (c) processing-area air, (d) stack gas, and (e) environs. The following discussions cover in brief the general features involved in the control of radiation hazards in each of the above five categories. Detailed description of the monitoring procedures and equipment used is beyond the scope of this chapter.

1. Monitoring of Operating Areas and Equipment

Although the equipment and facilities provided are adequate for handling the radioactive process solutions under normal operating conditions, in the event of operational accidents or the need to enter any of the equipment cells or areas for inspection or maintenance, it is necessary that the

areas and equipment be surveyed for the presence of contamination and radiation. In addition, routine surveys are made of all the operating areas in order that contamination can be removed and/or confined to the Radiation Zones. The techniques of decontamination are discussed in Chapter XXI.

1.1 Health Monitor (HM) Stations

Fixed monitor stations which measure and record instantaneous beta and gamma radiation levels in the Purex-Plant 202-A Building are located as follows:

Location of Chamber	Number of Chambers
Operating Gallery	8
Power Unit Control Room	2
P.R. Room	2
Recovered Acid Storage Vault	4
Regulated Shop	1
Sample Gallery	11
Storage Gallery	2
Aqueous Make-Up Facility	2
Canyon Lobby	2
Central Control Room	4
Crane Cab	3
Crane Cab Gallery	2
Head-End Control Room	4
Hot Shop	3

The recorders for all Crane Cab HM stations are located in the cab. All the other HM recorders are located in the Dispatcher's Office.

A complete installation consists of an ion chamber, a Beckman Model-V vibrating reed amplifier and switching mechanism, and a recorder. The ionization chamber is a 5-in.-diameter Bakelite shell with approximately half of the wall of the chamber cut away and covered with 0.005-in.-thick cellulose nitrate or cellulose acetate sheet for detection and measurement of gamma and beta radiation.

The Beckman Model-V amplifier can be connected to 1 to 12 ionization chambers, dependent on the switching mechanism used. Radiation fields which can be reliably detected are limited by the volume of the ionization chamber and by the sensitivity of the Beckman amplifier. The Model-V Beckman Amplifier has a useful range for measurement of typically from 0.3 mr./hr. to 900 mr./hr. (the exact range depending on the specific ionization chamber used). Sensitivity can be changed for special operating conditions by adding or removing plug-in resistors. The HM instruments are calibrated by the Radiation Monitoring Unit.

1.2 Portable survey instruments

The value of any radiation survey is dependent on the judgment of the surveyor in selecting an instrument, making the survey, and interpreting

the results of the survey. In order to prevent variable and indeterminate errors, survey instruments must be used for quantitative surveys in substantially the same way as that in which they were calibrated. The majority of survey instruments operate on some form of the ionization chamber principle (i.e., measurement of the ionization caused by radiation passing through a gas in an enclosed chamber).

To get reliable and reproducible results with any instrument, the following precautions are taken:

(a) Sufficient warm-up time is allowed (usually on the order of a few seconds).

(b) The instrument is adjusted to zero. For some instruments it is possible to make this zero adjustment in the radiation field. Others require that the adjustment be made prior to entering a Radiation Zone.

(c) The distance from source is accurately measured.

(d) Caution is exercised to avoid contamination of the survey instruments.

(e) Since most instruments are sensitive to mechanical disturbances, flames, electrical discharges, or drafts, care is taken to avoid these conditions.

(f) It is quite possible to miss radioactive contamination or beams of radiation by too rapid a survey. Therefore, considerable skill and experience are required to detect the presence of radiation or be assured that radiation is absent.

The applications and characteristics of the most common portable survey instruments (CP Meter, Juno, and others) are summarized in Table XIX-1.[6] A number of modifications of the instruments described in Table XIX-1 are used for specialized purposes. More detailed descriptions for operation of the various radiation survey instruments may be found in HW-28802.[13]

New instruments for radiation using detection scintillation counters are currently being developed. These instruments are based on the principle of light emission from a phosphor when bombarded by radiation. A wide variety of phosphors exist and thus scintillation counters may be adapted for measuring alpha, beta, and gamma radiation.

2. Monitoring of Personnel

2.1 Radiation protection standards

A manual of radiation protection standards issued by the Director of Radiological Sciences forms the basis for radiation protection policies for personnel and contains the latest recommendations for control of radioactive materials and radiation hazards at the Hanford Atomic Products Operation.[12]

This book of standards supersedes the Special Hazards Bulletins and covers permissible limits and working standards, radiation control procedures, exposure and monitoring records, radiation incident investigations, and radioactive waste disposal procedures.

2.2 Personnel exposure monitoring

A personnel monitoring program is maintained for three main reasons:[10] (a) prevention of unnecessary exposure to personnel, (b) establishment of permanent records, and (c) statistical aid to other methods of measuring radiation.

External radiation is monitored by pocket meters (ionization chambers) and film badge meters, whereas internal emitters are determined usually by a study of body fluids and occasionally by measurements of emitted gamma radiation.

Pocket meters, commonly called "pencils", are worn in pairs and give a quantitative measurement of gamma radiation exposures on a daily basis. A predetermined charge is placed on the electrode of the ionization chamber, and the extent to which this charge is dissipated is an indication of the exposure to radiation. The charges on the two meters are read at the end of each shift of use and can indicate gamma or hard beta readings of from 5 to 280 mrads. The pencils are designed to measure gamma radiation; however, beta radiations of 1 M.e.v. or greater are capable of penetrating the walls of the chamber and will be partially recorded.[10] Since these chambers may be discharged by mechanical shock, dropping them or otherwise subjecting them to sharp blows should be avoided.

Pocket meters are supplemented by a film badge that contains film partially covered by a suitable filter such as 1 mm. of silver or cadmium. The film badge contains a high and a low-sensitivity film, both sensitive to beta and gamma radiation. The sensitive film is effective in the range of approximately 25 mr. to about 5 r. The insensitive film is effective up to about 40 r. and is read only in the case of major exposure. Film-badge packets are removed from the badge and developed at routine intervals (usually two weeks).[13] The film badges are also developed in advance of schedule whenever daily readings of "pencils" indicate that the individual has been exposed to significant radiation. The developed film serves also as a permanent record of each employee's exposure to beta and gamma radiation.

Finger rings containing small circular pieces of film are worn by personnel whose hand exposure may be expected to be considerably higher than the general total body exposure (as measured by the chest film badge). Finger rings usually are developed on a weekly basis and detect radiation received by the hands.

Routine interim physical rechecks are made on process-plant employees to determine the absence of systemic radiation effects. In addition to this program, a bio-assay group performs routine biological sampling of personnel who work with radioactive materials. The required frequency of sampling is determined by the employee's job assignments.

Additional samples are taken in case of radiation incidents. Sample bottles for large-volume urine analysis are delivered to and picked up from homes of employees.

Since radioiodine concentrates in the thyroid gland, routine direct surveys of the thyroid glands are taken of separations-plant employees. A special gamma scintillation probe is used to measure the radioiodine content of these glands. The frequency of the surveys is based upon work assignments.(13)

2.3 Monitoring of personnel leaving a Radiation Zone

Personnel working in a Radiation Zone wear protective clothing and equipment as prescribed in the Special Work Permit or Standard Operating Procedure issued jointly by the supervision of the Radiation Monitoring, operating, and servicing groups. Protective clothing and equipment of the following kinds are prescribed:

(a) Head protection -- cloth caps, cloth hoods, rubber hats.

(b) Hand protection -- canvas, leather, surgeon's rubber gauntlet, or rubberized canvas gloves worn individually or in specified combinations.

(c) Foot protection -- shoe covers, rubbers, canvas boots, or British leggings worn individually or in specified combinations.

(d) Body protection -- laboratory coats, coveralls, and/or rubber suits.

(e) Respiratory protection -- respirator, assault mask, Chemox mask, breathing air supply, or fresh air mask.

(f) Meters -- film badge, pencils, and finger rings when specified.

Before removal, protective clothing should always be surveyed with detection-type instruments for contamination. Protective clothing is removed on special "step-off pads" at the boundary of the Radiation Zone (SWP Lobby). Clothing and equipment are removed in such a manner that the individual steps from a potentially contaminated area to a clean area without the spread of contamination. Prior to removal, complete survey of all protective clothing and equipment is made with Poppy and GM instruments. If activity is detected, additional care is exercised in the removal of the clothing to prevent spreading of the contamination to the survey instruments and surroundings. A resurvey of the individual is required after removal of the protective clothing. Depending on the contamination level, the used clothing is either placed in a laundry hamper for washing or wrapped and labeled (showing the contamination level) for the guidance of the laundry. As a further check, hand and shoe counts are taken on both alpha and beta-gamma-type fixed counting instruments or on both a Poppy and a GM-type instrument after each exit from a Radiation Zone, before eating or smoking, and before leaving the process area for the day.

3. Ventilation Air Monitoring

Air samples are taken to determine what respiratory protection will be required as well as to provide an after-the-fact check on the adequacy of the provided protection. The methods of air sampling described in this section refer to sampling for particulate radioactive materials only. Special ionization chambers are used for determination of xenon and/or krypton. Since the filters used pick up only from 5 to 10 per cent of the radioiodine, the normal air samplers are supplemented with caustic scrubbers. The caustic scrubbers collect radioiodine as well as some particulate ruthenium oxides.

A vacuum air-sampling system is installed in the Purex Plant with 150 sampling points located throughout the Processing (202-A) Building (including the laboratory portion of the building). Twenty of these sample points are located in the Canyon area; ten, in the Operating and Pipe Gallery; ten, in the unregulated section of the service side; and forty-eight, in the Sample Gallery (one above each hood). The remainder of the sampling points are distributed throughout the building. Five types of samplers are used. Samplers with or without hose couplings are used in locations where the activity levels permit entrance to the room being sampled. Remote-type samplers with or without hose couplings are used when it is desirable to sample the air of a room without actually entering the room to install the filter paper. Special samplers are inserted in exhaust ducts to sample discharge air. The hose couplings on certain of the samplers allow extra flexibility in that a section of hose may be attached between the sampler head and vacuum supply, thus making these samplers semi-portable. The entire sampling system is permanently piped with a central pumping station. The piping headers that service different parts of the building are valved so that they may be individually isolated from the rest of the system. The vacuum is maintained by a 940-cu.ft./min. water-seal rotary vacuum pump. To assure continuity of sampling, two pumps are provided, one to serve as a spare. Both pumps, however, are connected to the emergency electrical system.(1) A few "Motoair" portable air samplers are provided for locations where the building vacuum source is not available or in locations where only infrequent air samples are required.

The usual air sampler filter medium is Hollingsworth-Vose H-70, an asbestos mat paper with a thickness of 0.018 inches.(13) Chemical Warfare Service Type 6 asbestos paper is sometimes used. A minimum of 300 cubic feet of air must be pulled through the filter when plutonium is the main contaminant. For fission products and uranium, only 80 cubic feet are required.(13) In many cases the samplers are allowed to operate continuously and the filter paper is changed at definite 8 or 24-hour intervals. The filter paper is removed from the sampler and particulate contamination collected is measured in the counting room by its activity.

In some locations in 202-A Building, such as the Crane Cab and Central Control Room, a count rate meter (CRM) is connected directly to the air sampler, thus combining the functions of sampling and counting. The CRM assembly consists of the following parts:

(a) An air sampler (Motoair or vacuum source).

(b) An air-sampling head modified so that a GM tube is held close to the filter paper. The GM tube measures the total activity deposited.

(c) An indicating circuit and recorder for the GM tube output.

(d) An audible or visual alarm system.

The results are indicated and recorded either in the Crane Cab or the Dispatcher's Office. A warning is given if the counting rate exceeds a predetermined rate.

Respiratory protection is required if the air-sample activity indicates air contamination in excess of the following working limits:[13]

Fission products (mixed)	1×10^{-9} microcuries/cu.cm.
Plutonium	2×10^{-12} microcuries/cu.cm. (Corresponds to about 3×10^{-11} micrograms/cu.cm. for Pu-239)
Uranium	1.7×10^{-11} microcuries/cu.cm. (Corresponds to about 2.5×10^{-5} micrograms/cu.cm. for natural U)

4. Stack Gas Monitoring

The stack gas is routinely monitored for particulate activity. With special equipment (Kanne Ionization Chambers), the activity due to radioactive noble gases, such as xenon and krypton, can be measured when deemed necessary. In the Purex Plant, separate Fiberglas filters are provided for the following: (a) each of the three dissolvers; (b) combined vessel and condenser vent system; and (c) the ventilation air system. (This last filter also re-filters the vessel and condenser vent system filtrate.) A separate silver reactor is included for each of the three dissolvers and also one reactor for the combined vessel and condenser vent system. Provisions are made for sampling the waste gas before and after each reactor and before and after each Fiberglas filter. These samples are taken on an intermittent basis to give indication of individual equipment efficiency. In addition, continuous gas samplers are installed approximately 50 feet above the base of the stack and approximately 5 feet from the top of the stack. Samples similar to those used for ventilation air monitoring are taken at these points on a routine basis. A small caustic scrubber for absorption of radioiodine is included in the stack gas samplers. The waste gas samplers are all connected to Motoair pumps and are independent of the building vacuum system. In order to obtain good process control and help guard against contamination of the environs, continuous recording waste gas analysers are provided to supplement the samples that require laboratory or counter-room analysis. Waste gas is continuously drawn through and collected on a moving-tape strip filter. The activity level is measured by a beta scintillation counter located under the filter and then recorded on a continuous basis on instruments in the Dispatcher's Office. A second device draws waste gas through a

packed caustic scrubber and then measures and records the activity of the effluent solution by means of a count rate meter. An aliquot sample of the scrubber effluent caustic is also analyzed daily by chemical methods to confirm and extend the CRM readings. Calculation of total radiation quantities emitted to the atmosphere per unit of time is made possible by measuring the stack gas flow rate with Pitot-tube instruments which are included as part of the stack monitoring equipment.

5. Environs Monitoring

Despite the fact that extensive equipment is provided for treating and filtering the Hanford waste gases, it is necessary not only to monitor the Purex-Plant stack discharge, but also to know with complete accuracy that the welfare of the region is not being adversely affected by these emissions. A constant survey of the immediate area and surrounding territory is accordingly maintained. The results of these surveys serve both as a guide to plant operating procedures and also as a legal record for the Hanford Atomic Products Operation. A check station (614 Building) is maintained in each plant (exclusion) area. These stations contain continuous air monitoring equipment and film badges. In addition to the 614 Buildings, ionization chambers (Integrons or HM chambers) to measure and record gamma and beta radiation, and radioautograph particle filters are scattered throughout the area. During a typical month, at the time of this writing, 1000 samples of river, drinking, and waste water: 6000 air samples; and 1000 samples of vegetation, soil, and mud are taken and analyzed. These samples are taken on the plant as well as from neighboring territory. Vegetation samples, for example, are obtained from an area within approximately a 250-mile radius of the plant. The frequency and extent of sampling depend largely on the distance from the plant. Month-by-month distribution of radioactive materials in the air, water, and earth in and around the plant reservation are reported and mapped.

D. EFFECTS OF RADIATION ON THE BODY(5)

The material to be presented in the subsequent paragraphs on radiation effects and their treatment is included for general interest only. The reader should keep in mind that the previously described design and control methods employed in plant operation during the past eleven years have provided an extremely safe operational environment. The material is offered to give the reader an appreciation of the need for the precautions and controls described previously so that he may conduct himself in his work with the awareness that considerable thought and effort has gone into the evolution of workable and reliable safe practices. Every effort is being made to expand and apply new knowledge on radiation hazards and treatment as it becomes available. Therefore the following is subject to revision from time to time.

1. General Principles Governing Biological Effects

1.1 Effects on tissue

The site of action of radiation upon human and animal tissues is the individual cell. The part of the cell most sensitive to radiation is the cell nucleus; the material surrounding the nucleus is also sensitive, but to a lesser degree. Specific changes which may be detected in a cell following irradiation are as follows:

(a) Cytolysis -- dissolution of the cell with a shrinking nucleus and clumping of the chromatin in the nucleus. A structureless mass results which may go to liquidation.

(b) Changes in cell division -- mitosis may be stopped or depressed.

(c) Changes in function of the cell -- e.g., motility is stopped or depressed, secreting cells may stop secreting, and change in cell nutrition may occur.

It should be emphasized that any of these changes can result from other stimuli besides radiation, and that a specific irradiation effect does not exist.

1.2 Radiosensitivity and reversibility

Although all body tissues are affected by radiation, certain tissues display a higher degree of vulnerability than others when exposed to the same source of radiation. Radiosensitivity is a term which denotes relative vulnerability of various tissues. Lymphoid tissue, bone marrow, sex organs, and the lining of the small intestine are the most radiosensitive tissues. Muscles, nerves, and fully grown bones are the least radiosensitive; and other tissues, such as skin, liver, and lung, lie between these extremes.

The reversibility of radiation effects is important particularly in occupational exposure. Reversibility is a term which denotes the relative ability for tissue to return to its previously normal state after it has been exposed to radiation. The degree of reversibility depends upon the intensity of the radiation received and upon the regenerative or reparative properties of the tissue. Some tissues such as skin, the blood-forming elements, membranous linings of body cavities, or glands, are endowed with a special mechanism for repair and regeneration. Other tissues, such as muscle, brain, and certain structures of the kidney or eye have no provision for regeneration, and repair is formed by a scar which does not take the place of the tissue it replaces. The latter effect is said to be irreversible. Although a tissue may be repaired a few times following exposure to radiation, it may not have sufficient recuperative capacity to regenerate itself again and again. Hence, previously sustained radiation injury should be properly appraised and repetition should be avoided.

1.3 Total exposure and time factor

In all acute radiation injuries, the total amount of radiation received and the exposure rate are the critical factors. Exposure to radiation of

high intensity for a short time will cause much more damage than the same integrated exposure divided and administered at intervals. A certain degree of tissue recovery may take place in the intervals between such periodic exposures.

1.4 Biological effectiveness of various radiations

The various ionizing radiations produce generally similar qualitative effects. However, the biological effects of the different radiations are not quantitatively equivalent, as indicated in Section C2 of this chapter. The biological effectiveness of a radiation depends on the specific ionization or linear ion density induced by the radiation which varies directly with the square of the particle's charge and inversely with its speed. If the radiation (such as gamma) does not consist of charged particles but indirectly ejects charged particles from the matter through which it passes, its effectiveness is considered as that of the ejected particles.

2. Effects of External Radiation

A characteristic effect on the skin of overexposure to radiation is the production of erythema or redness, which is the first of several recognized degrees of injury to the skin. This effect resembles sunburn except that the interval between a single exposure to the radiation and erythema may be as long as about 4 weeks, though it occurs as fast as sunburn in some cases. At Hanford Atomic Products Operation the concern for this injury is not from a single exposure but from small daily overexposures which may lead to more serious effects.

The following excerpt from The Effect of Atomic Weapons(3) presents the most recent information relative to the effect on humans of large acute exposures to radiation:

> Because large acute exposures to radiation have been accepted by human beings only as a result of accidents, it is impossible to state definitely that a particular amount of radiation will have certain consequences. Nevertheless, from experiments with animals, whose sensitivity to radiation relative to that of human beings has been studied, certain general conclusions have been drawn. These cannot be exact, in any event, since there are marked variations among individuals insofar as sensitivity to radiation is concerned. The probable early effects of acute radiation exposures to the whole body are shown below:(3)

Acute Dose	Probable Effect
0 to 25 r.	No obvious injury.
25 to 50 r.	Possible blood changes, but no serious injury.
50 to 100 r.	Blood-cell changes, some injury, no disability.
100 to 200 r.	Injury, possible disability.
200 to 400 r.	Injury and disability certain, death possible.
400 r.	Fatal to fifty per cent.
600 r. or more	Fatal.

With reference to any of the specific acute doses in the above table, somewhat larger exposures may be received, with an equivalent likelihood of injury, if exposure is protracted over several days or weeks, or if it is limited to a portion of the body.

3. Effects of Internal Radiation

The effects of taking radioactive materials into the body depend on the nature of the radioactive materials and, to some extent, on the path by which they enter. An important factor is the tendency for certain elements to concentrate in specific body tissues. For example, iodine concentrates in the thyroid gland whether it is inhaled or ingested. Plutonium, which deposits in the bones, is more dangerous when inhaled or introduced through a wound than when it is ingested (because of the lower fractional retention of ingested plutonium in the bones).

Radioactive materials in the body cause injuries similar in nature to those from external radiation but more localized. Iodine has a tendency to destroy the thyroid gland cells and, therefore, indirectly to cause interference with the regulation of growth and other functions of the body. Radioactive tellurium, technetium, and ruthenium damage primarily the kidneys; radiocesium, the muscles. Plutonium and many fission products destroy the blood-forming mechanism in the bone marrow.

4. Treatment of Radiation Injuries

A great deal of experimental work has been done on treating of radiation injuries.(8) No practical method has been found for preventing the death of cells or tissues heavily injured by radiation. However, the regenerative powers of the body are great, and if the body can be helped to survive the acute stage of illness, even the most radiosensitive tissues may be able to resume their normal functions. Many treatments help the body through the acute stage of the illness. Whole bood, plasma, and plasma substitutes revive the blood supply to the body. Penicillin limits infections. Certain materials, such as toluidine blue, help to reserve the tendency to bleeding. Physicians also maintain the salt and water content in the patient's body. Adequate nutrition, especially with substances used by the body to manufacture proteins and cells, is also necessary.

REFERENCES

(1) N. L. Anderson and W. A. Graf, Criteria XXVIII, Project CA-513, Purex Facility Radiological Safety Design Criteria. H.A.P.O. 1-2-52.

(2) A. J. Delario, Roentgen, Radium, and Radioisotope Therapy, Lea and Febiger, Philadelphia (1953).

(3) Los Alamos Scientific Laboratory, The Effects of Atomic Weapons, Pp. 339-365, (June, 1950).

(4) K. Z. Morgan et al., Nat'l. Bur. of Standards Handbook 52, Maximum Permissible Amounts of Radioisotopes in the Human Body and Maximum Concentrations in Air and Water, (3-20-53).

(5) H. M. Parker et al., Introductory Lecture Series in Health Instrumentation, Part I, Chapters III and X. Hanford Works. 1947.

(6) H. M. Parker et al., Nat'l. Bur. of Standards Handbook 42, Safe Handling of Radioactive Isotopes, (Sept., 1949).

(7) H. M. Parker, Letter to Managers. H.A.P.O. 2-10-54.

(8) United States Atomic Energy Commission, Sixth Semiannual Report, Washington D.C., (1949).

(9) United States Atomic Energy Commission, Eighth Semiannual Report, Washington D.C., (1950).

(10) AECU-817 Lecture Notes, Health Physics Training Lectures, 1948-1949. T. H. J. Burnett et al. O.R.N.L. 9-29-50.

(11) HW-18700 Redox Technical Manual, Chapter II. Author not stated. 7-10-51.

(12) HW-25457 Manual of Radiation Protection Standards. Author not stated. 5-1-53.*

(13) HW-28802 Manual of Radiation Monitoring Practices. H. F. Soule et al. 7-23-53.*

(14) TID-388 Health Physics Insurance Seminar. K. Z. Morgan et al. O.R.N.L. 3-12-51.

---

*) These manuals are periodically reviewed and brought up to date. The reader is cautioned to use the latest revised version.

TABLE XIX-1

PORTABLE RADIATION SURVEY INSTRUMENTS

Instrument	Function	Radiation	Range*	Description	Remarks
CP Meter	Radiation field or surface contamination measurement.	Beta, gamma	3 ranges: 0 to nominal maxima of 50, 500, 5000 mr./hr. for gamma. Approximately 5 times the gamma range for beta.	Chamber 3-in. diam. by 6-in. long of Bakelite with detachable end cap for beta-gamma discrimination.	Weighs 4 pounds. Easily set to zero in radiation field. Excellent general purpose instrument.
TP Meter	High-level radiation field or surface contamination measurements. (Not for personnel monitoring.)	Combined beta, gamma	Up to approximately 500 rads/hr.	Small plastic bulb probe at end of extension rods.	Modified CP meter, equipped with extension rods to allow survey of high-level sources without overexposing surveyor. Also suitable for readings in not readily accessible locations.
Juno	Detection of surface contamination and measurement of radiation field.	Alpha, beta, gamma	3 ranges: 0 to 50, 500, 5000 mr./hr. nominal for gamma. 0 to 4,000,000 dis./min. for alpha. 0 to 15,000 mrads/hr. for beta.	Ion chamber with built-in shields controlled from handle to discriminate between alpha, beta, and gamma.	Very satisfactory for general usage. Combines advantages of the CP and Zeuto.
Portable Poppy	Detection of surface contamination.	Alpha	Set for greater than 500 dis./min. with standard source. Maximum range is about 40,000 dis./min.	Qualitative audible indicator. Rejects beta and gamma pulses.	Various probes available. Some are quite fragile.
Portable GM (Geiger-Muller)	Detection of surface contamination and radiation fields. Qualitative measurements only.	Beta, gamma	Multiple range. Nominal maximum 80,000 counts/min.	Audible signal and/or counting rate meter.	Insensitive to alpha. Chipping or cracking the opaque coating of the GM tube may make the tube sensitive to light. Quite fragile. Susceptible to electrostatic effects.

*) Ranges are typical values and may vary slightly from one instrument to another.

PART V: SAFETY, continued

CHAPTER XX. RADIATION INTENSITIES AND SHIELDING

CONTENTS

	Page
A. INITIAL RADIATION INTENSITIES	2003
1. Radiation Units and Their Interconversion	2003
2. Initial Gamma Radiation Intensity	2005
3. Initial Beta and Alpha Radiation Intensities	2006
B. ATTENUATION OF GAMMA RAYS	2007
1. General Problem of Gamma-Ray Attenuation	2007
2. Attenuation by Distance	2008
3. Attenuation by Passage Through Matter	2008
3.1 General mechanisms of absorption	2008
3.2 Absorption mechanisms	2008
3.21 Photoelectric absorption	2008
3.22 Compton scattering	2008
3.23 Pair production	2009
3.24 Absorption in lead	2009
3.3 The net effect of passage through matter	2009
4. Attenuation by Scattering	2011
4.1 Scattering by solid objects	2011
4.2 Sky shine	2012
C. ATTENUATION OF ALPHA AND BETA PARTICLES	2013
D. CALCULATION OF RADIATION INTENSITY AT A RECEPTOR	2014
1. Effective Mean Energy Levels	2014
2. Gamma Radiation Intensity at a Receptor	2015
2.1 Point source	2015
2.2 Line source	2016
2.3 Large bulk source	2017
2.4 Receptor immersed in the source	2018
3. Alpha and Beta Radiation Intensities at a Receptor	2019
3.1 General	2019
3.2 Beta radiation intensity at a receptor immersed in a source	2019

CONTENTS

Page

E. PUREX-PLANT SHIELDING 2020

1. General 2020

2. Apertures 2021

REFERENCES 2022

CHAPTER XX. RADIATION INTENSITIES AND SHIELDING

The irradiated uranium slugs processed in the Purex Plant are associated with high levels of alpha, beta, and gamma radioactivity. The origin, nature, and extent of this radioactivity are discussed in Chapter II. Harmful effects of the radiation upon personnel and the extent to which protection from these effects is necessary are indicated in Chapter XIX. The present chapter explains methods of reducing the intensity of radiations by the interposition of a massive shield between the radiating source and the protected receptor. Of the three types of radiation, the very penetrating gamma rays (or photons), which are an electromagnetic radiation, are the most important from a shielding standpoint, requiring several feet of concrete to reduce the intensity to a harmless level. Alpha rays (or alpha particles), which are helium nuclei, and beta rays (or beta particles), which are electrons, being far less penetrating than gamma rays, are normally absorbed by the vessel walls and are of concern only in special situations.

A. INITIAL RADIATION INTENSITIES

The effect of radiation on matter is a function of the radiant energy which is absorbed, or dissipated, in the matter. The rate at which radiant energy is dissipated in matter is commonly termed the radiation intensity (or dosage rate). The estimation of the radiation intensity from a radioactive source and at a receptor offers a practical method for predicting and controlling the effects of exposure of the receptor to radiation.

The radiation intensity at a receptor is a function of the initial radiation intensity (at the source) and of the attenuation (i.e., intensity reduction) attained between the source and the receptor. Attenuation is discussed in subsequent sections of this chapter. This section defines radiation units and presents methods for estimating the initial radiation intensity.

1. Radiation Units and Their Interconversion

With other conditions assumed to be constant, the absolute rate at which radiant energy from a source is dissipated (or absorbed) in matter (e.g., in ergs/(cu.cm.)(sec.)) is a function of the power of the source, the energy of individual radiations, and the detailed properties of the matter. The units which are commonly used to express quantities of radiant energy and energy rates are defined below.

1.1 Units of source power

The energy released by the emission of a single characteristic radioactive particle or photon from a particular parent atom is known as the energy level of that particle and is usually expressed in M.e.v. (Million electron volts). The number of such particles or photons emitted per unit of time is directly proportional to the number of disintegrations per unit of time of the parent atom. When the number of disintegrations per second

of a parent atom is equal to 3.7×10^{10}, the radioactive material is said to have one curie (theoretical, or absolute) of radioactivity. Thus, rate of energy release by a radioactive source, commonly termed the power of the source, is directly proportional to the curies of radioactivity and the energy level. Alternatively, the power of an alpha, beta, or gamma radiation source in curies and energy level may be converted to watts by use of the following expression:

$$W = 5.8 \times 10^{-3}\ CE \quad \ldots\ldots\ldots\ldots\ldots\ldots\ldots\ldots\ldots\ldots \quad (1)$$

where W = watts;

C = curies;

E = energy level in M.e.v. (For beta particles of a particular energy level and from a particular parent atom, E is equal to 0.4 times the maximum energy level.)

Radiation counting instruments are commonly used for determining the number of disintegrations per minute (dis./min.) of a radioactive sample. Such instruments actually count the number of ionizing particles emitted per unit of time. The number of counts per minute (co./min.) may be converted to disintegrations per minute and, hence, to curies by application of counter efficiency and geometry factors. The method for converting counts per minute to curies is explained in Chapter II.

1.2 Units of radiation intensity

For gamma and X rays (i.e., photonic radiations), the roentgen (r.) is a unit of energy dissipation which may be defined as that quantity of gamma or X radiation which will produce one electrostatic unit of ions of either sign in one cubic centimeter of atmospheric air, provided that all secondary electrons are fully utilized and all secondary photons escape. By a conversion of energy units, the roentgen can be shown to correspond to the absorption of approximately 83.8 ergs per gram of air. Specification of a reference material in defining the roentgen has resulted in a unit by means of which energy dissipation and radiation intensity are expressed independently of the properties of absorbing matter. Also, over the range of energy levels encountered in the Purex Plant (i.e., 0.1 to 2.3 M.e.v.), the fraction of the photonic source energy dissipated in air, and therefore, the radiation intensity-to-power ratio is essentially independent of energy level (see under A2, below). In terms of certain common substances other than air, the roentgen corresponds to the dissipation of quantities of energy which are sometimes conveniently approximated with no specifications as to photonic energy level or detailed absorber properties. For example, for water and for human tissue, one roentgen corresponds, approximately, to the absorption of 93 ergs per gram.

For convenience, values expressed in roentgens may be converted to milliroentgens (mr.) by multiplying by 1000.

For any ionizing radiation (including gamma, beta, and alpha), other units have been defined in terms of energy absorption. The rad, which has been recently adopted by international agreement, may be defined as the quantity of any ionizing radiation which will produce an energy dissipation of 100 ergs per gram. Unlike the roentgen, the rad corresponds to the absorption of an amount of energy in matter which is independent of the properties of the matter. Technically, this means that the intensity in rads per unit time, at a receptor exposed to a given source, is dependent on the properties of the receptor. In actual practice, the effect of receptor properties is generally negligible, since, under identical irradiation conditions, the actual rates of energy absorption per gram, in substances of common interest (e.g., water, human tissue, air) are roughly equal.

The rad was adopted to replace the reps (roentgen equivalent physical) which is defined as the quantity of any ionizing radiation which will produce an energy dissipation (93 ergs) equivalent to a roentgen in one gram of tissue. Approximately, energy dissipation expressed in rep. may be converted to rads by multiplying by the ratio 93/100. Values expressed in rads or reps may be converted to millirads (mrads) or millireps (mreps), respectively, by multiplying by 1000.

2. Initial Gamma Radiation Intensity

The initial gamma intensity from a source is commonly expressed in terms of roentgens per unit time at a distance of one centimeter from the source. It is a measure of the rate of gamma energy dissipation per cubic centimeter of air at that point and is directly proportional, approximately, to the gamma power of the source. For example, if the total gamma energy is considered to be concentrated at a point,

$$I_o = 5500\ CE \qquad (2)$$

where I_o = initial gamma intensity, r./hr. at 1 cm. distance in air;

C = gamma curies;

E = energy level, M.e.v.

For cases in which the total gamma energy cannot be considered to be concentrated at a point, variations of the above equation are presented under B3.31 and D2, below. Also, for the derivation of this equation and its variations, it has been assumed that the fraction of gamma energy absorbed in one centimeter of path in air (i.e., the absorption coefficient in air) is independent of energy level and is equal to 3.5×10^{-5} cm.$^{-1}$. This assumption is valid for gamma energy levels in the range from 0.07 to 3 M.e.v., which embraces the range of interest in the Purex Plant (0.1 to 2.3 M.e.v.).

The actual values of C and E are normally obtained from instrument readings and/or a knowledge of the irradiation history of the source. For example, if the irradiation history of the slugs from the pile is

known, the radioactivity in gamma curies per ton of irradiated uranium, for any fission product emitting photons of a particular energy level, may be estimated by the method described in Chapter II. From a knowledge of the Purex-Plant flowsheet (or operating conditions), the gamma curies per ton of uranium can then be converted to other bases, e.g., gamma curies in the volume of solution in a particular vessel.

For maximum accuracy, Equation (2) and other radiation intensity expressions presented in this chapter are used to estimate an individual intensity value for each energy level present in the source. Individual intensity values are then summed to give the total intensity. However, a solution of sufficient accuracy for most practical purposes may be obtained by the use of conservative simplifying assumptions concerning the energy spectrum of the source. A value of "effective mean" energy level for the source is selected and an intensity estimate is made based on total curies of all energy levels present in the source. (See under D1, below.)

By application of the conversion equation (Equation (1), under A1.1, above), the initial gamma intensity may be defined in terms of watts. A method for estimating, directly, the power of a source in terms of watts of fission products per ton of pile metal is explained in HW-17415[8].

3. Initial Beta and Alpha Radiation Intensities

The method for estimating the initial beta radiation intensity closely parallels the method discussed under A2, above, for gamma radiation. For example, if the total beta energy of a source may be considered to be concentrated at a point, a modified form of Equation (2) may be used.

As discussed under A2, above, for the derivation of Equation (2) it was assumed that the fraction of gamma energy absorbed in one centimeter of path in air, i.e., the absorption coefficient in air, is independent of energy level and is equal to 3.5×10^{-5} cm.$^{-1}$. For beta particles, absorption coefficients in air are larger and cannot be considered to be independent of energy level. Assuming that the total energy loss for a beta particle in air is uniformly distributed over its range, the fraction of beta energy absorbed in one centimeter of path in air, μ_b, is equal to the reciprocal of the range in air expressed in centimeters. The maximum range R, in cm., of beta particles in air may be expressed in terms of the particle energy level E, in M.e.v., as follows:

$$R = 315\ E^{1.33} \qquad (3)$$

If the total beta energy of a source is considered to be concentrated at a point, the initial intensity in rads/hr. may be approximated by use of Equation (2), under A2, above, corrected for the difference in absorption coefficients in air for beta and gamma radiations. Thus, for beta particles of a particular maximum energy level, the intensity for gamma photons of like energy is estimated and multiplied by the ratio $\mu_b/(3.5 \times 10^{-5})$.

Unlike gamma rays, the beta rays of a particular group from a parent atom vary in energy level from zero to maximum for the group. In estimating the power of a beta source, an average value of energy level, generally

considered to be about 0.4 times the maximum, is used. However, for approximating beta intensity by the method described above, maximum values for energy levels may be used in Equation (2) if the average range is also assumed to be about 0.4 times the maximum as calculated by Equation (3). Under these conditions, the two factors of 0.4 cancel. As for gamma photons, the values of beta curies and energy levels may be estimated on the basis of the history of the irradiated slugs. (See Chapter II.)

As mentioned before, the effects of alpha radiation are significant only if the alpha particles are taken into the body. For this reason, estimation of initial alpha radiation intensity is of no practical importance insofar as discussion in this chapter is concerned.

B. ATTENUATION OF GAMMA RAYS

1. General Problem of Gamma-Ray Attenuation

Attenuation (i.e., intensity reduction) of gamma rays may be accomplished by distance, by passage through matter, and by scattering. The various attenuation mechanisms are considered in detail on the following pages of this section. These mechanisms are employed in the Purex Plant to reduce intensities to values consistent with personnel safety.

The table below lists gamma-ray intensities and required attenuation factors corresponding to typical radiation sources in the Purex Plant. The tabulated values are for points which are 8 feet from the equipment piece, in the case of tanks, or 12 feet from the equipment piece in the case of columns. Each of these dimensions approximately equals the effective distance from the particular radiating source to the outside of the shielding wall. Therefore, the attenuation factor for that source is only that required of the mass of the shield and is not a function of distance. Attenuation factors listed are those required for uncontrolled zones (in which the maximum permissible radiation intensity is 0.1 mr./hr.)

Source	Approximate Intensity, R./Hr. (90 Days "Cooling")	Approximate Attenuation Factor Required
IWW Receiver	45,000	5×10^8
HAF Tank	7,200	8×10^7
HA Column	2,700	3×10^7
IAF Tank*	7.2	8×10^4
IA Column*	2.7	3×10^4
IB Pump Tank	0.02	2×10^2
2EU Receiver	0.0007	7

*) When processing codecontamination-cycle product.

2. Attenuation by Distance

Apart from the attenuating effects of any matter through which the radiation passes, the intensity of gamma rays at any point decreases with increasing distance from the source. For a mathematical point source, the intensity is inversely proportional to the square of the distance. For an infinite line source, the intensity decreases with the first power of the distance. In the theoretical case in which the radiation originates from an infinitely large area, no attenuation with distance occurs. For real-object sources of finite extension the manner in which the radiation intensity decreases with increasing distance is generally intermediate between these idealized special cases. The exact relationship depends on the shape of the source and on its size compared to the distance to the receptor. Evaluation of the exact intensity-distance relation for real-object sources is mathematically complicated. However, results sufficiently accurate for most practical purposes may be obtained by treating a real-object source as the most nearly equivalent mathematically simple source type -- point, line, or large bulk. The use of these approximate methods of calculation is discussed in Section D.

3. Attenuation by Passage Through Matter

3.1 General mechanisms of absorption

Unlike alpha and beta particles, gamma rays are not completely stopped by passing through a certain thickness of matter, but are attenuated by a factor which is, approximately, an exponential function of the thickness of matter traversed. This attenuation is the result of partial absorption of the gamma rays by three possible mechanisms: photoelectric absorption, Compton scattering, and pair production. These absorption mechanisms are described and their relative importance under various conditions is discussed, under 3.2, below.

3.2 Absorption mechanisms

3.21 Photoelectric absorption

Photoelectric absorption occurs when the entire energy of the photon is used to eject an electron from one of the inner orbits of an atom. Absorption by this mechanism predominates at low gamma energies and increases with the atomic number of the absorber. In light elements, such as aluminum, the photoelectric effect accounts for most of the absorption up to about 0.1 M.e.v. In heavy elements, such as lead, it is effective up to about 1 M.e.v.

3.22 Compton scattering

Compton scattering is a collision of a photon and an electron in one of the outer orbits of an atom in which part of the photon's energy is used to eject the electron from an atom, while the remainder of the energy appears as a scattered photon. This process accounts for most of the absorption in the intermediate energy range (0.1 to 10 M.e.v. in aluminum; 1 to 4 M.e.v. in lead). Compton absorption varies with the number of electrons per cubic centimeter of absorber and hence is proportional to the density of the absorber.

Therefore, in the energy range where this process predominates, the effectiveness of a shield is roughly proportional to its sectional density, expressed in grams per square centimeter, and is otherwise nearly independent of the composition of the shield. Compton absorption decreases with increasing gamma energy.

3.23 Pair production

Pair production occurs when a photon enters the field of a nucleus and is converted into a positive electron (positron) and a negative electron, plus a certain amount of translational energy of these particles. The electron is absorbed like a beta ray; the positron collides with another electron and the mass of the two particles is converted into two 0.5 M.e.v. photons. This phenomenon occurs to a significant extent only at very high gamma energies (about 10 M.e.v. in aluminum; above 4 M.e.v. in lead) and increases rapidly with the energy of the photons and the atomic number of the absorber. Pair production does not take place to any significant extent in Purex-Plant shielding, since the highest gamma energy encountered is only approximately 2.5 M.e.v.

3.24 Absorption in lead

Figure XX-1 shows the contribution of each of the absorption mechanisms to the total absorption of gamma radiation in lead. Individual and total absorption coefficients are plotted as functions of photon energy. Below approximately 1 M.e.v., photoelectric absorption is the predominating mechanism; from about 1 to 4 M.e.v. Compton scattering accounts for most of the absorption; and above this range absorption by pair production becomes particularly significant.

3.3 The net effect of passage through matter

3.31 Self-absorption of a source

In a thick source, such as the HAF Tank, a considerable fraction of the intensity is absorbed in the source itself and appears as heat energy. It is evident that radiation from incremental volumes near the surface is not attenuated, but radiation from incremental volumes some distance from the surface will be attenuated to an extent dependent on the distance the ray traverses in reaching the surface. Thus, the fractional contribution of the total radiation leaving the surface decreases exponentially as incremental volumes further from the surface are considered. It may be shown by integration that the total radiation from an infinitely thick source is equal to the radiation from a source one mean-free path in thickness, measured in the direction of the beam, without self-absorption. The mean-free path is defined as the thickness of absorber (source, in this case) required to reduce gamma radiation intensity by a factor of e (2.718).

Estimates of radiation intensity are generally corrected for self-absorption if the source thickness is greater than one mean-free path. Under these conditions, estimates are based on the radiation in a source of thickness equal to one mean-free path. If the radiation from such a

source may be considered to be concentrated at a point, the initial gamma radiation intensity may be estimated by use of the following equation (vice Equation (2), above):

$$I_o = \frac{5500cEA}{\mu} \quad \ldots\ldots\ldots\ldots\ldots\ldots\ldots\ldots\ldots\ldots\ldots\ldots \quad (4)$$

where I_o = initial gamma intensity, r./hr. at 1 cm. distance in air;

c = gamma curies/cu.cm.;

E = energy level of the source, M.e.v.;

A = projected area of the source, sq.cm., as "seen" by the receptor;

μ = total absorption coefficient in reciprocal cm. (see Figure XX-2).

For use in the equation above, Figure XX-2 presents a plot of total absorption coefficient (μ), in reciprocal centimeters, and the mean-free path ($1/\mu$), in centimeters, as functions of gamma-ray energy level, for each of several common absorbing materials. Also in Figure XX-2, the dashed line labeled "Compton μ/ρ" can be used to estimate the absorption coefficients (or the mean-free paths) for materials of low atomic number at energies greater than 0.1 M.e.v. (See under B3.22, above.) For example, HAF has a density of 1.5. At 1.5 M.e.v. the value of μ/ρ (0.044 cm.$^{-1}$ from Figure XX-2) multiplied by the density gives the absorption coefficient as 0.066 cm.$^{-1}$.

Like Equation (2), under A2, above, Equation (4) is derived for use with monoenergetic sources, but may be used directly for a source of a range of energy levels if a value of "effective mean" energy level is available. (See D1, below.)

3.32 <u>The attenuation equation</u>

The attenuation of gamma radiation upon passage through matter may be computed from the following equation, based on the combined effects of the absorption mechanisms involved and on the fact that the intensity falls off exponentially with the thickness of the absorber.

$$I = BI_o e^{-\mu t} \quad \ldots\ldots\ldots\ldots\ldots\ldots\ldots\ldots\ldots\ldots\ldots\ldots \quad (5)$$

where I = radiation intensity after traversing t centimeters of absorber, r./hr.;

B = "buildup factor", an empirical correction factor for secondary photons produced by Compton scattering (see text and tables below);

I_o = initial radiation intensity in r./hr. at 1 cm.;

e = 2.718;

μ = absorption coefficient in reciprocal centimeters (see Figure XX-2);

t = distance through absorber (shield) in direction of beam, cm.

The buildup factor, B, allows for the photons which are not destroyed (but merely reduced in energy and diverted) by Compton scattering. The magnitude of B varies with the shield (absorber) material, with energy levels, and with shield thickness, although the relationship is difficult to define. Contrary to the earlier information, recent data indicate that B is primarily dependent on shield material and thickness. Values of B, estimated on this basis for use in the design of the Purex Plant, are tabulated below.

Buildup Factor, B, Used in Purex-Plant Design

Absorber	Buildup Factor, B: Thin Shields (<1 Mean-Free Path)	Buildup Factor, B: Thick Shields
Air	6	6
Water	---	33
Concrete	1	3
Steel	1	1
Lead	1	1.5

Investigations completed since the Purex-Plant design have led to B factors which are generally considered as more nearly correct than those listed above. The latest values are listed below.

Buildup Factor, B
Corrected by More Recent Investigations[2][6]

Absorber	Buildup Factor, B: Thin Shield (<1 Mean-Free Path)	Buildup Factor, B: Intermediate Shield (2-8 Mean-Free Paths)	Buildup Factor, B: Thick Shield (>8 Mean-Free Paths)
Concrete	1	5	15
Lead	1	2	3
Water	---	22	39

Along with the absorption coefficient (μ) and the mean-free path ($1/\mu$), Figure XX-2 presents another related ordinate which in some cases is more convenient to use. This ordinate gives the thickness in inches required to reduce the primary radiation intensity by a factor of 10. It should be emphasized, however, that this factor does not allow for secondary photons produced by Compton scattering, which are accounted for by the B term in the equation above.

4. Attenuation by Scattering

4.1 Scattering by solid objects

As discussed previously, when a primary gamma ray impinges on matter, such as a thick slab, the mechanism of Compton scattering produces photons of reduced energies. These photons are scattered in all directions, some of them escaping from the slab on the same side as the source. The net

effect is a "reflection" of a portion of the primary ray. However, unlike the reflection of light, the fraction of the photons which rebound are scattered back away from the surface in all directions.

In the design of shielding, gamma-ray attenuation resulting from scattering by the shield must be considered in addition to the attenuation by passage through the shield. If there is any possibility for radiation to be scattered around a shield or through an opening in the shield, the design must assure adequate attenuation by scattering. In practice, this is accomplished by means of labyrinths which are discussed under E2, below.

Figure XX-3 gives relationships useful for estimating energy and intensity values for photons scattered from a thick slab. The problem is illustrated by the sketch which shows a ray from a source, S, incident at a given angle θ_1, to a massive scatterer of unit projected area as defined in Figure XX-3, and scattered into unit solid angle at a given angle, θ_2. The scattered angle, θ, measures the deviation of the scattered ray from the path of the primary ray. All angles are measured in a plane passing through the source, the scatterer, and the receptor.

The two plots in Figure XX-3, for primary rays at energies of 2 and 0.5 M.e.v., respectively, show intensity functions versus angle of "reflection", θ_2, for various values of angle of incidence, θ_1. If the cross-sectional area of the incident gamma ray at the scatterer is less than the projected area of the scatterer, the smaller area is used in computing the scattered radiation intensity. The use of these figures to compute the radiation scattered from a thin scatterer (on the order of one mean-free path) will yield intensities considerably too high. When the source and/or the scatterer may not be considered "points", they should be divided into parts; each small part is then considered a "point", and the total intensity is the sum of the intensities from all parts of the scatterer resulting from exposure of each to all parts of the source.

The energy of the major component of the scattered radiation may be computed with the equation given on Figure XX-3. The remainder of the scattered radiation will be even less energetic since it originates from multiple scattering.

4.2 Sky shine

"Sky shine" is a special case of scattering from a massive "shield", the atmosphere, with both the source and the receiver in the shield. The radiation intensity due to sky shine is presented in Figure XX-4 for radiation projected vertically in a moderately narrow cone (approximately 1 steradian* or a 60° angle) with the receptor at the level of the source at

---

*)A steradian is defined as the solid angle subtended at the center of a sphere by an area on the sphere's surface equal to the square of the radius. (Thus, the surface of the entire sphere subtends 4 steradians.)

a horizontal distance, d. However, for radiation projected into a cone of solid angle approaching 2π steradians (i.e., a hemisphere), this figure yields intensities several times too low. For large angles (greater than π steradians or 120°), the equation given on the figure may be used as an approximation. This equation is based on 2 M.e.v. primary radiation.

C. ATTENUATION OF ALPHA AND BETA PARTICLES

1. Beta Radiation

Compared to gamma photons, beta particles are much less penetrating because of their greater mass and associated greater energy absorption in matter. For example, the 2.3 M.e.v. beta particle from either UX_2 or Rh^{106} has a range of approximately 25 feet in air and 0.15 inch in aluminum. Normally, beta particles do not penetrate container walls. Because of the relatively short range of beta particles in materials of interest, as compared to the inherent mass and geometry of the Purex Plant, beta attenuation mechanisms are of primary interest only as related to the problem of a receptor at a short distance from a bare beta source.

For beta radiation the effect of distance attenuation on intensity is similar to that for gamma. Likewise for beta, the effect of air as an absorbing material (shield) between the source and the receptor provides additional attenuation which is generally considered negligible compared to pure distance attenuation. Unlike gamma radiation, however, the range of beta particles in air is definitely limited by absorption and varies significantly with energy level (see Equation (3), under A3, above). Thus, for a point source, the attenuation of beta rays by distance may be approximated by the method explained for gamma rays, provided the distance from source to receptor is small compared to the range in air. The initial intensity (as estimated by the method outlined under A3, above, for example) is divided by the square of the distance (in centimeters) to the receptor.

For a beta source of thickness greater than one mean-free path, the initial intensity must be corrected for self-absorption. A method analogous to that for gamma rays may be used (see under B3.31, above). For beta rays, the mean free path y (cm.) of a particle of energy level E (M.e.v.) in a material of density d (g./cu.cm.) may be approximated by the expression

$$y = \frac{0.055\ E^{1.33}}{d} \qquad \text{.....} \quad (6)$$

2. Alpha Radiation

Because of the large mass of alpha particles (compared to electrons and photons) and their double charge, the ion production per unit length of path (i.e., rate of energy absorption by matter through which the particle passes) is high. This means that the total energy of the particle is absorbed in passing through a relatively short distance in matter.

For example, the range of the 4.18 M.e.v. alpha particle from U^{238} is approximately 1 inch in air, 0.001 inch in the dead layer of skin, 0.0006 inch in aluminum, and 0.00035 inch in lead. Because of this short range, the intensity of alpha radiation may be neglected insofar as shielding calculations or the effect on material is concerned.

D. CALCULATION OF RADIATION INTENSITY AT A RECEPTOR

The radiation intensity at a receptor is a function of the initial radiation intensity and of the attenuation attained between the source and the receptor due to the combined effects of distance and of interposed matter (shielding). Initial radiation intensities and attenuation have been discussed in previous sections of this chapter. In this section, methods are presented for estimating intensities at receptors under conditions likely to be of interest in the Purex Plant.

1. Effective Mean Energy Levels

In estimating the total radiation intensity from a source of more than one energy level, maximum accuracy results if individual values of intensity, calculated for each energy level present, are summed. For approximate estimates, however, a single calculation for each type of radiation, based on an estimated value of the "effective mean" energy level for that type of radiation, is more convenient.

For the Purex Plant, the energy spectrum of the uranium slugs is roughly constant. Therefore, for many sources of interest it is practical to approximate radiation intensities on the basis of conservatively estimated values of effective mean energy level.

Because of the variation of absorption coefficients with energy level and material (see Figure XX-2), calculated values of mean effective energy level are affected by self-absorption of the source and by shielding. For approximate solutions of Purex-Plant problems, the effect of self-absorption is negligible but effects due to shielding should be considered. For example, in estimating the gamma intensity from a given source, the effective mean energy level may vary by a factor of three, depending on the amount of shielding involved. For a source with the energy spectrum of uranium slugs irradiated for 400 days to 600 MWD/T and "cooled" for 90 days, the approximate variation of mean effective energy level, for gamma radiation, with concrete shield thickness is shown by the table below:

Variation of Mean Effective Energy Level With Shield Thickness

Concrete Shield Thickness, Ft.	0	2	6.5
Effective Mean Energy Level, M.e.v.	0.5	0.8	1.5

For conservative approximations of Purex-Plant gamma intensities, mean effective energy level values of 0.7 M.e.v., in the absence of shielding, or with a thin shield (6 in. of concrete or less) and 1.5 M.e.v., in the

presence of thick shielding (more than 6 in. of concrete), may be assumed. For the principal beta case of interest, viz., a receptor immersed in a source (see under D3.2, below), a value of 1.5 M.e.v. may be used as the effective mean value of the beta energy maxima.

2. Gamma Radiation Intensity at a Receptor

2.1 Point source

A real-object radiation source may be considered as approximately equivalent to a mathematical point source if the distance between the source and the receptor is greater than any dimension of the source area facing the receptor (i.e., if the source subtends an angle of less than 54° at the receptor). Under these conditions, the radiation attenuation due to the combined effects of distance and passage through matter is approximately governed by the following equation:

$$I = \left(\frac{I_o}{a^2}\right) (Be^{-\mu t}) \quad \ldots\ldots\ldots\ldots\ldots\ldots\ldots\ldots\ldots\ldots \quad (7)$$

where a = distance from source to receptor, cm.;

B = "buildup factor", an empirical correction factor for secondary photons produced by Compton scattering*;

e = 2.718;

I = radiation intensity at the receptor, r./hr.;

I_o = initial radiation intensity, r./hr.;

t = distance through absorber (shield) in direction of beam, cm.

μ = absorption coefficient in reciprocal centimeters (see Figure XX-2).

The use of Equation (7) is illustrated by the calculations below, in which the intensity of gamma radiation at a point 25 feet from the HAF Tank and shielded by 6 feet of concrete is estimated. For this case (thick source) I_o is calculated by means of Equation (4) (B3.31, above):

---

*)For numerical values of B, see B3.32.

$$I_o = \frac{5500cEA}{\mu} \quad \ldots\ldots\ldots\ldots\ldots\ldots\ldots\ldots\ldots\ldots\ldots\ldots \quad (4)$$

where c = 0.06 gamma curies/cu.cm.;

E = 1.5 M.e.v. (see under D.1, above);

A = 74,300 sq.cm. (10-ft. diameter by 8-ft. liquid depth);

μ = 0.066 cm.$^{-1}$, for HAF (from B3.31, above).

$$I_o = \frac{(5500)(0.06)(1.5)(74,300)}{(0.066)}$$

$$= 5.6 \times 10^8 \text{ r./hr.}$$

For use in Equation (7),

a = 760 cm. distance;

B = 15;

μ = 0.105 cm.$^{-1}$ for concrete;

t 183 cm. of concrete. (The beam of radiation is assumed to be perpendicular to the two parallel shield faces.)

Hence, the intensity of radiation at the receptor is estimated to be

$$I = \frac{(5.6)(10)^8(15)(2.718)^{-(0.105)(183)}}{(760)^2}$$

$$= 6.6 \times 10^{-5} \text{ r./hr.}$$

$$= 0.07 \text{ mr./hr.}$$

As is frequently the case when estimating by the simplified method outlined above, this intensity value may be on the conservative (high) side.

2.2 Line source

A real-object source, such as a column or a pipeline, may be considered a line source if it is longer than the distance to the receptor and its diameter subtends an angle smaller than about 54° at the receptor. Under these conditions, the attenuation due to distance alone (apart from any additional attenuation which may be obtained as a result of passage through matter) may be approximately calculated from the following equation:

$$I = \frac{I_o}{aL}\left(\frac{\theta\pi}{180}\right) \quad \text{.....} \quad (8)$$

where I = intensity at the receptor, r./hr.;

I_o = initial radiation intensity, r./hr.;

a = perpendicular distance from the source (or its extension) to the receptor, cm.;

L = length of the source, cm.;

θ = angle subtended by the longest dimension of the source (L) at the receptor, degrees.

When the effect of shielding upon the radiation intensity from a line source is also to be evaluated, it is generally convenient to divide, for calculation purposes, the line source into two to four component parts each of which meets the criteria for point sources. The radiation intensity at the receptor due to each of these component parts is then calculated by the use of the point-source equation (Equation (7)) and the intensities at the receptor due to the several components of the source are added together to obtain the total intensity at the receptor.

2.3 Large bulk sources

The radiation intensity at a receptor located at or very near the surface of a real-object radiation source, or at any receptor located at a distance smaller than the smallest dimension of the source facing the receptor, may be calculated from the following equations:

(a) For a thick source, i.e. for a source which is more than one mean-free path thick (e.g., a tank):

$$I = \frac{2\pi I_o^*}{\mu} \quad \text{.....} \quad (9)$$

(b) For a thin source, i.e. for a source which is less than one mean-free path thick (e.g., a large spill):

$$I = \left(\frac{I_o^* V}{A}\right) 2.3 \log\left(\frac{R^2}{a^2} + 1\right) \quad \text{.....} \quad (10)$$

where I = radiation intensity at the receptor, r./hr.;

I_o^* = initial radiation intensity from cu.cm. of source, r./hr.;

μ = absorption coefficient of source, reciprocal centimeters;

V = volume of source, cu.cm.

A = area of source, sq.cm.;

R = radius of circular source, cm. For a non-circular source, the average of the largest and smallest radii or 80 per cent of the largest radius, whichever is larger, may be used.

a = perpendicular distance from source to receptor, cm.

Equations (9) and (10) may be used in radiation attenuation calculations when no shielding is involved for any real-object source which does not meet the point-source or line-source criteria suggested under D2.1 and D2.2, above. However, Equation (9) quite often yields unduly conservative results. For a thick real-object source which is too large to meet the point-source or line-source criteria, but is small enough to be subdivided into two parts each of which meets the line-source criteria, or into two to four parts each of which meets the point-source criteria, more realistic results are generally obtained by carrying out distance-attenuation calculations for each such part separately and adding together the intensities at the receptor due to the several parts. When shielding, as well as attenuation by distance, is involved, subdivision of the source, whether thick or thin, for calculation purposes, into components each of which meets the point-source criteria is almost always the simplest reasonably accurate calculation method.

2.4 Receptor immersed in the source

For a receptor entirely surrounded by an infinite volume of a gamma radiation source, a mathematical expression may be derived for the receptor intensity by the general method outlined for other extended sources. Alternatively, since the power generated in an infinite source equals the power dissipated, the intensity at a point in the source may be estimated by a relatively simple conversion of the power per cubic centimeter to roentgens per unit time. In practice, the source is not an infinite volume and, for the most accurate estimate, any expression should be corrected for the loss of energy to the surroundings.

Derivation of an expression based on equal power generation and dissipation implies that the energy equivalent to a roentgen for the material of the source (e.g., 93 ergs/g., if the source is water) is known or may be estimated. Assuming a spherical source of radioactive water surrounded by air, the gamma intensity at the center of the source is

$$I = (2.26)(10^6)\ cE\ (1-e^{-\mu r}) \quad \ldots\ldots\ldots\ldots\ldots\ldots\ldots\ldots \quad (11)$$

where I = intensity at receptor, r./hr.;

c = curies of gamma radiation per cu.cm.;

E = energy level, M.e.v.;

e = 2.718;

μ = absorption coefficient for source material, reciprocal cm.;

r = radius of the source, cm.

For liquid sources with a density near one, the intensity calculated by Equation (11) is approximately correct although greater accuracy may be obtained by dividing this value by the density.

For sources generally encountered in practice, the values of r, in the above equation, must be approximated from the actual shape of the source. However, such an estimate is not likely to introduce an appreciable error. For Purex-type solutions, omission of the $e^{-\mu r}$ term (which corrects for the energy loss to the surroundings) in the equation above introduces an error of approximately 20 per cent when r equals 20 cm. The error is on the conservative (high I) side. If r is larger, the error is reduced.

3. Alpha and Beta Radiation Intensities at a Receptor

3.1 General

Alpha and beta particles, being far less penetrating than gamma rays, are normally absorbed by the vessel walls and are of practical concern only in special situations, such as immersion of a receptor susceptible to radiation damage in a beta source. Special shielding provisions are normally not required for alpha and beta particles. However, it should be noted that exposure to beta rays without an intervening vessel wall of sufficient thickness, as well as direct skin contact or ingestion of an alpha or beta source are hazardous to personnel (as discussed in Chapter XIX).

3.2 Beta radiation intensity at a receptor immersed in a source

For a receptor entirely surrounded by an infinite volume of a beta radiation source, the intensity at the receptor is calculated in a manner similar to that explained for gamma radiation. However, because of the relatively short range of beta particles in matter, for any reasonable finite source no correction for energy dissipation to the surroundings need be applied. Assuming the source is a volume of radioactive liquid of a density equal to one, the beta intensity at a point in the source is:

$$I = (8.4)(10^5)\ cE \qquad (12)$$

where I = intensity at the receptor, rads/hr.;

c = curies of beta radiation per cu.cm.;

E = maximum energy level, M.e.v. (see under A3, above).

For a source of a density other than one, the intensity as calculated by Equation (12) should be divided by the density.

In using Equation (12) to estimate the intensity at a point on a receptor, it is assumed that no shielding is provided by the thickness of the receptor. For conservative approximations, this assumption should be considered valid unless it is known that the receptor thickness is sufficiently great to stop beta particles of the highest energy level present.

E. PUREX-PLANT SHIELDING

1. General

After its discharge from the piles and subsequent "cooling", irradiated uranium is transported by railroad to the Purex Processing Building (202-A) for processing. During all phases of these operations, shielding adequate for personnel safety is required. Purex-Plant shielding has been designed to reduce radiation intensities to a maximum of 1.0 mr./hr., in controlled zones, 0.1 mr./hr. in uncontrolled zones, and 0.01 mr./hr. in radiation-counting equipment zones.

Massive, lead-shielded casks (see Chapter XIII), each of which carries one bucket of slugs (approximately one ton of uranium), are used for the transport of uranium slugs by railroad. The radiation from the slugs is attenuated by 12 inches of lead to a gamma intensity of approximately 1 mr./hr., outside the cask. Upon arrival at the Processing Building (202-A), the irradiated slugs are either stored in a water-filled storage basin or charged directly to a dissolver.

Radiation escaping to the out-of-doors during the unloading of slug buckets from the railroad cars in the Building 202-A Railroad Tunnel is attenuated by earth and by concrete shielding. The railroad approach to the building is a curved section of track, about 600 feet long, located 10 feet below grade in a cut, the outer edge of which is topped with a 12-foot high (above grade) earth embankment. A 95-foot-long Railroad Tunnel Extension, with 2-foot-thick concrete walls and a 1-foot-thick concrete roof, shields that section of the approach adjacent to the building. Two concrete walls on opposite sides of the track and parallel to the building at distances of 175 feet and 600 feet, approximately, shield the open end of the Railroad Tunnel Extension. The near wall (on the inside of the curved track) is 1 foot 6 inches thick; the far (outer) wall is 1 foot thick.

The principal shielding elements in the 202-A Building are concrete walls and roof. For economy of design and construction, the thickness of any continuous wall is constant. The thickness is that required to give protection from the radiation source of maximum intensity shielded by the wall. Thus, the shielding for many parts of the building is more than adequate.

The upper walls of the Canyon are 4 feet thick and are designed to protect personnel in the Operating Gallery when one bucket of slugs is suspended near the wall. The lower canyon wall, on the south, which is 2 feet 6 inches thick, provides sufficient protection for the normally unoccupied Pipe Trench. An outer wall on the south side, 5 feet 6 inches thick, protects personnel from radiation from the pipes and from that radiation not sufficiently attenuated by the thin inner wall. The Canyon roof is 1 foot thick and reduces the radiation level resulting from sky shine to a maximum of 1.0 mr./hr. at ground level.

Concrete cover blocks for the process cells, the "hot" Pipe Trench, the Decontamination Cell, and the Pool Cell are designed to limit the radiation level on the Canyon deck to 100 mr./hr. Thus, in the absence

of any radioactive materials above the deck level, access to the Canyon is permitted if the covers are in place. Process-cell cover blocks are 3 feet thick; Decontamination Cell and Pool Cell blocks are 2 feet thick; and Pipe Trench cover blocks are 2 feet 6 inches thick. Cell cover blocks for the Acid Storage Vault are 1 foot thick.

The concrete sidewalls of the Railroad Tunnel, within the Canyon area, are 4 feet thick and limit the radiation level on the tunnel floor to 12 mr./hr., when cell covers are in place. The 8-foot water depth over the loaded slug buckets in the storage basin reduces the radiation level at the surface to 100 mr./hr.

To eliminate direct radiation to the crane cab, the cabway is shielded by a concrete curtain wall 2 feet 2 inches thick and a concrete cab gallery floor slab 2 feet thick. The crane operator in the cab is protected from scattered radiation by 4 inches of steel on the top and upper sides, 3 inches on the lower sides, and 1-1/2 inches on the bottom. The auxiliary crane, which operates at a higher level in the canyon, has no shielding wall. This crane is either remotely operable from the regular crane or independently operable fron a non-shielded cab. It is used independently only at relatively low radiation levels.

A concrete pipe chase runs the length of the Sample Gallery behind the sample enclosure. This chase has a front wall 1 foot thick and removable concrete covers 1 foot thick which attenuate the radiation from the sample drain headers, recovered acid header, recovered solvent header, and laboratory drain header. The chase for interconnecting lines between the Solvent Treatment Building (276-A) and the Canyon has walls 2 feet thick.

In addition to the principal shielding elements of the 202-A Building, special shielding is provided as required for the contact operation of certain equipment. For example, various thicknesses of lead, concrete, and steel are used for shielding the sampling equipment. These materials are also used for shielding in the PR Vault; the PR cans, themselves, are shielded with 1/2 inch of lead.

The Waste Storage Facility (241 Tank Farm) and the piping from the 202-A Building are shielded by a minimum of 7 feet of earth. Portions which have no earth cover (e.g., diversion boxes and pump pits) are shielded by concrete covers. Diversion box covers are made up of three blocks, each of which is 1 foot 8 inches thick. The pump pit cover is a concrete block 2 feet 6 inches thick.

2. Apertures

Special design techniques, based on attenuation by scattering, are employed to prevent the escape of high intensity radiation through necessary openings, or interruptions, in otherwise continuous shielding. These openings, or apertures, are frequently required for operating or construction convenience. In the Purex Plant, they include the clearances around cell cover blocks, the openings resulting from passage of process piping through shielding, and access openings into radiation zones.

It is apparent that if a straight length of pipe were run through a shielding wall, radiation could escape through the space required by the pipe. On the other hand, if the path of the pipe were curved, the radiation would be attenuated by the effective straight-line thickness of the shield and scattering through the pipe. In the Purex Plant, piping through concrete shields is run with an offset bend of at least five diameters in the shield.

Likewise, if the point between a cell cover block were a straight line, radiation could escape through the resulting crack. In the Purex Plant, radiation through such joints is attenuated by maintaining close clearances and fabricating steps in the joint such that no straight-line crack passes more than one-third of the distance through the shield.

For the case of openings such as doorways, labyrinths are frequently constructed in the shielding material to attenuate radiation. A labyrinth provides a path through the shield which includes sufficient right angle turns to scatter any radiation entering the opening to a harmless level. In addition, the labyrinth is constructed with walls of a thickness sufficient to cause any straight-line radiation to pass through the normal shield thickness.

REFERENCES

(1) Cork, Radioactivity and Nuclear Physics, D. Van Nostrand Co., New York (1947).

(2) Dixon, "Buildup Factor for Transmission of Gamma Rays through Concrete and Lead", Physical Review, 85, 498, (1952).

(3) Glasstone, Source book on Atomic Energy, D. Van Nostrand Co., New York (1950).

(4) Heitler, The Quantum Theory of Radiation, 2nd. Ed., Oxford Univ. Press, London (1944).

(5) United States Atomic Energy Commission, The Reactor Handbook, Vol. 1, Physics, Pp. 753-782, (1953).

(6) Van Dilla and Hine, "Gamma Ray Diffusion Experiments in Water", Nucleonics, 7, 54, (July, 1952).

(7) HW-17091 Activity of Fission Products as a Function of Decay Time, and Relationships to TBP Process. J. L. Schwennesen. 2-27-50.

(8) HW-17415 Activity of Fission Products. P. R. Gillette. 4-14-50.

(9) HW-25744 Purex Facility-Project CA-513 Process Design Criteria, Criteria No. XI and XXVIII. W. B. Webster. 10-29-52.

(10) HW-27988 Shielding of Purex PR Vault. J. L. Weeks. 5-7-53.

(11) KAPL-317 Compton Scattering of Gamma Rays from a Thick Slab at Skew Angles. L. Tanks and L. H. Root, General Electric Company. 3-20-50.

(12) KLX-24 Nomograms for the Calculation of Gamma Shielding. J. L. Balderston, J. J. Taylor, and G. J. Brucker, Kellex Corp. 11-15-48.

(13) TNX-7 The Computation of Radiation Hazards. C. W. J. Wende, du Pont Co. 1-11-44.

FIGURE XX-1

THE ABSORPTION OF GAMMA RADIATION IN LEAD

DATA FROM CORK[1], FIGURE 6.6, PAGE 152

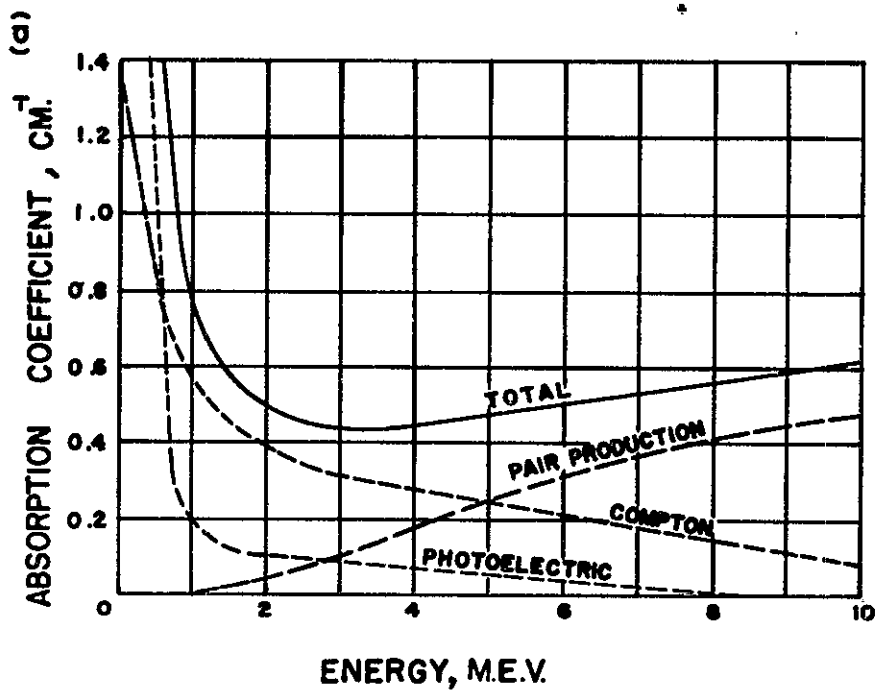

Note: (a) As explained in the text, the absorption coefficient is the reciprocal of the shield thickness required to reduce the incident gamma-ray intensity 2.78-fold. This thickness is also the mean free path of the gamma ray, in the shield material.

This plot gives only approximate values of the absorption coefficient. For shielding calculations the more exact values presented in Figure XX-2 should be used.

FIGURE XX-2

ABSORPTION OF GAMMA RADIATION

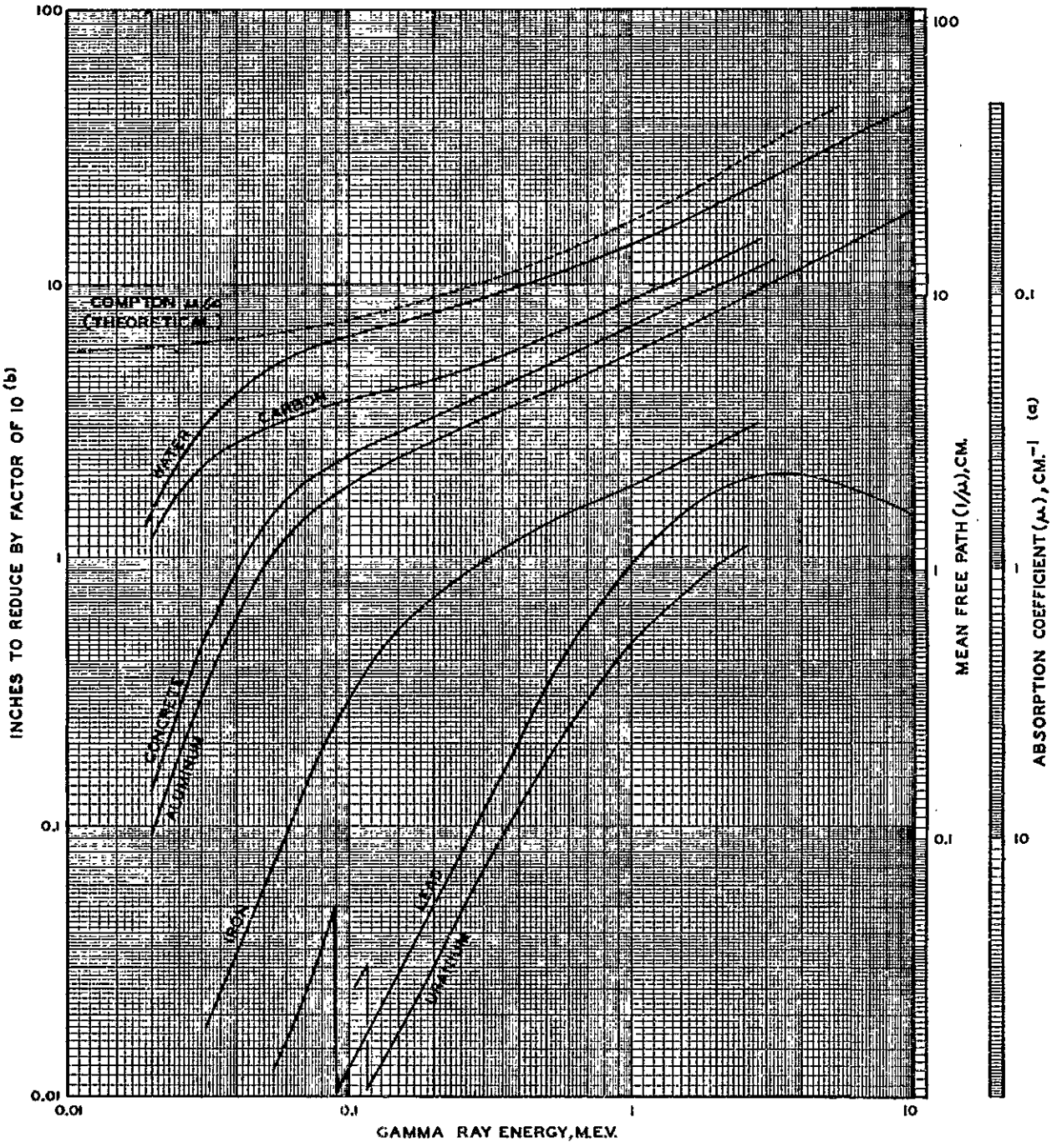

Note: (a) Refer to the text and Figure XX-1 for further explanation of the absorption coefficient. The use of the absorption coefficient in shielding calculations is explained under B3.3 in the text.

(b) This ignores the secondary photons produced by Compton scattering. (See B3.32 in text.)

FIGURE XX-3

REFLECTION COEFFICIENT FOR COMPTON SCATTERING FROM A THICK SLAB

DATA FROM TNX-7, FIGURE 7

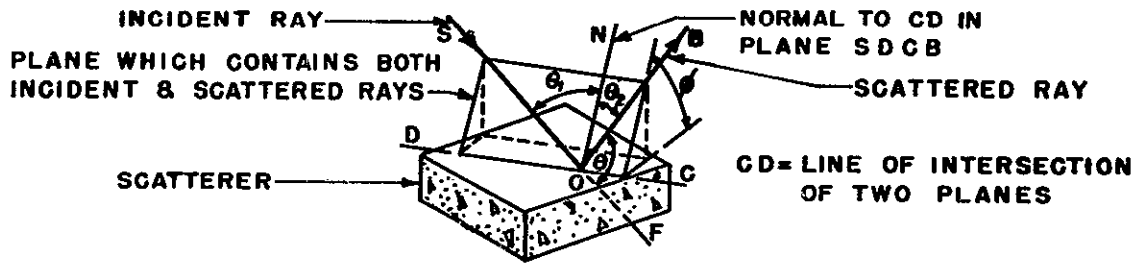

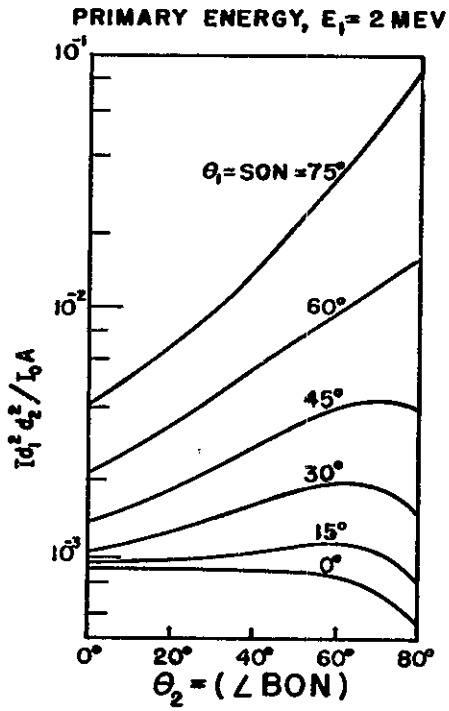

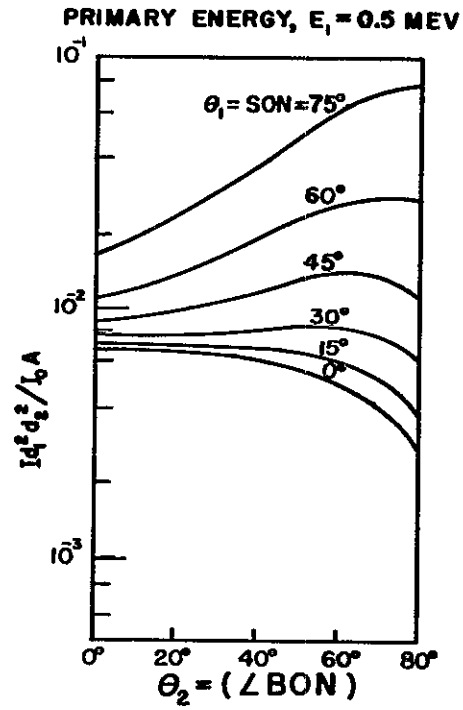

Nomenclature

I = Intensity at receptor, r./hr.

I_0 = Intensity at source, r./hr. at 1 cm.

d_1 = Distance from source to scatter, cm.

d_2 = Distance from scatter to receptor, cm.

A = Projected area of scatter, sq.cm.
= (sin ϕ cos θ_1)(area "seen" by source and receptor)

θ = Scattered angle (FOB)

ϕ = Angle of inclination of plane of incident and scattered ray to scatterer

Note

The energy, E_2 in M.E.V. of the scattered ray may be computed from the following equation:

$$\frac{E_1}{E_2} = 1 + 1.96\, E_1\, (1 - \cos\theta)$$

Equation from TNX-7, Figure 5

[redacted]

FIGURE XX-4

SKY SHINE

DATA FROM TNX-7 FIGURE 9

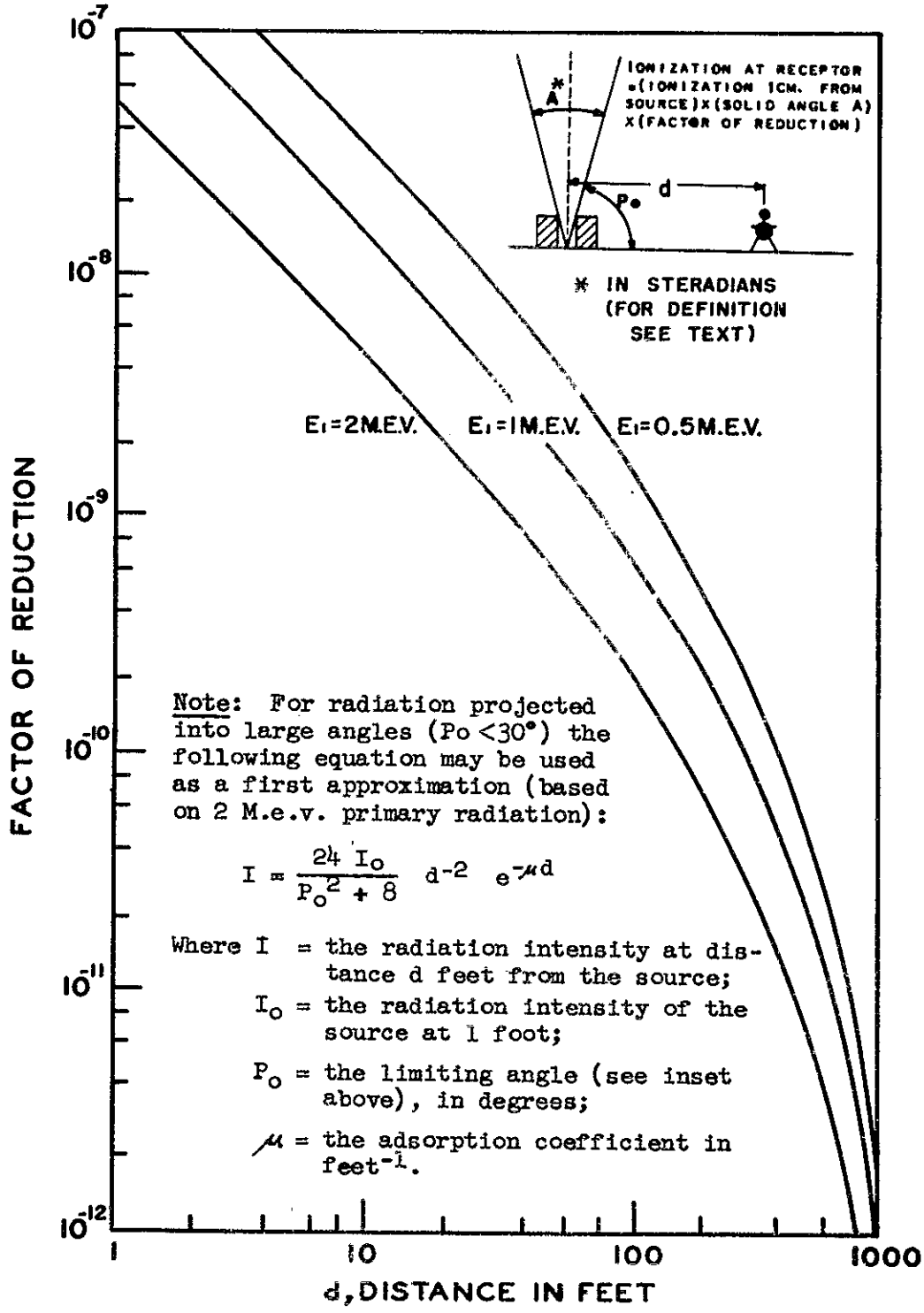

Note: For radiation projected into large angles ($P_o < 30°$) the following equation may be used as a first approximation (based on 2 M.e.v. primary radiation):

$$I = \frac{24\, I_o}{P_o^2 + 8}\, d^{-2}\, e^{-\mu d}$$

Where I = the radiation intensity at distance d feet from the source;

I_o = the radiation intensity of the source at 1 foot;

P_o = the limiting angle (see inset above), in degrees;

μ = the adsorption coefficient in $feet^{-1}$.

[redacted]

PART V: SAFETY, continued

CHAPTER XXI. DECONTAMINATION OF SURFACES

CONTENTS

	Page
A. GENERAL	2102
1. Introduction	2102
2. Terminology	2103
3. Principles of Decontamination	2103
4. Factors Influencing Decontamination	2105
5. Provisions for Application of Decontamination Procedures	2105
B. STAINLESS STEEL	2106
1. Alpha Contamination	2107
2. Beta and Gamma Contamination	2108
3. Procedure for Decontamination	2110
C. OTHER MATERIALS OF CONSTRUCTION	2112
1. Iron and Carbon Steel	2112
2. Concrete	2112
3. Glass	2112
4. Lucite and Plexiglass	2113
5. Wood	2114
D. PROTECTIVE COATINGS	2114
E. SKIN	2114
F. CLOTHING	2115
REFERENCES	2116

CHAPTER XXI. DECONTAMINATION OF SURFACES

Surface decontamination techniques are employed in the Purex Plant for the removal of radioactivity from various operating equipment and areas in order that personnel may approach the equipment to make necessary maintenance changes. This chapter presents a summary of information concerning decontamination solutions and methods. The ability to decontaminate a surface is determined largely by the material of construction (or protective coating, if used). For a discussion of materials of construction and protective coatings used in the Purex Plant, reference is made to Chapter XVI.

A. GENERAL

1. Introduction

The circumstances requiring the removal of activity from surfaces vary widely. The intensity of radioactivity within the Purex Plant covers a wide range and the types of work which may require decontamination of the equipment may vary considerably. The major part of the radioactivity entering the plant passes successively through the dissolver cells, feed treatment, first decontamination, and the waste handling cells; the balance of the plant processes material reduced in radioactivity by factors of the order of 10^5, compared to original specific activity. Equipment pieces used in process steps preceding the HC Column must generally be removed for maintenance from their normal location, because of the high degree of radiation present. Areas and equipment downstream (with respect to uranium and plutonium flow) from this point, although designed for remote maintenance, may possibly be reduced in radiation intensity to a level permitting personnel to work on the equipment in place under SWP (Special Work Permit) conditions. When an equipment piece in need of maintenance attention is removed from place only the piece itself need be decontaminated. If however the equipment is to be worked on in place then not only the piece of equipment concerned must be decontaminated, but also the equipment and structural elements which "see" the zone where the work is to be performed: the prevailing radiation intensity must be reduced to a level tolerable for personnel exposure for the length of the time required to perform the work. In some cases this may be impractical because of the location of certain pieces of equipment processing highly radioactive process solutions.

Because of the almost universal use of stainless steel in the construction of the Purex-Plant process equipment, the problem of decontamination of process equipment is largely a problem of removal of radioactivity from stainless steel. This particular material has received considerable study, and a fair degree of success has been realized up to the present time. The structural and supporting elements of the plant are fabricated almost solely from concrete and mild steel. These materials without a protective coating are extremely difficult, if not impossible,

to decontaminate. In the processing areas all non-stainless steel elements have been covered with protective coatings which have good resistance to process solutions and prevent wetting the bare material with contaminants. This permits the use of chemical reagents for decontamination which might otherwise react with the unprotected surfaces.

Decontamination of the surfaces of equipment and structural elements of the Purex Plant necessarily involves empirical procedures, based on knowledge obtained in plant practice and semiworks and laboratory studies at Hanford Atomic Products Operation and from experience gained at Oak Ridge National Laboratories and at other A.E.C. sites. The usefulness and feasibility of decontamination has been demonstrated at both H.A.P.O. and O.R.N.L. Principal difficulties encountered have been in decontamination of concrete and mild-steel surfaces where the protective coating had failed and permitted the contamination to contact the unprotected surface.

The decontamination techniques developed to date have satisfied specific conditions but may not necessarily constitute optimum procedures for the Purex Plant. For example, nitric acid is a widely used reagent which can give unfavorable results under some circumstances because of its etching action on stainless steel. Similarly, many other reagents have been reported to be effective in the removal of radioactivity, but the effects of their repeated use on the surface being treated may not have been noted or correlated. The following sections describe the reagents and techniques which have been successfully employed for decontamination procedures. Further study of decontamination problems is expected to lead to more rapid and less costly methods.

2. Terminology

The procedure of decontamination has given rise to the use of certain special terms and concepts.

The term decontamination is used to designate the removal of radioactive chemical elements from solid surfaces.

Contaminants are the radioactive elements present on the solid surface.

Mechanism of contamination is the means whereby the radioactive elements are transferred to and fixed to the solid surface.

Decontamination methods are the means utilized to remove the radioactive elements. They may be generally classified as (a) physical -- total or partial removal of the contaminated surface; (b) chemical -- reaction with the radioactive elements or the larger mass of the associated non-radioactive materials to convert them to a soluble or extractable condition; and (c) physico-chemical -- suspension by surface-active agents.

3. Principles of Decontamination

A review of decontamination literature reveals many conflicting and varied decontamination procedures. One can conclude that no "cut and dried" methods for decontamination exist and no reagent is universal for decontamination. In most cases the best decontamination agent for a specific problem

must be developed by trial. However, the lack of knowledge of the best reagent for decontamination does not call for a random approach to a decontamination problem.

The mechanisms governing surface contamination and decontamination are not as yet too well understood. However, laboratory tests and field decontamination of process equipment indicate some of the principles of contamination-decontamination phenomena to be as follows:(3)

(a) The art of decontamination requires the control of radioactivity at all times. Good planning and the subsequent pursuit of a well-thought-out decontamination procedure is helpful, no matter how small the job.

(b) Surfaces contacted by "spills" should be flushed or swabbed before the activity has had a chance to go to dryness. This applies also to the interior of process vessels.

(c) Removal of a thin film or layer of the contaminated surface is necessary for achievement of maximum decontamination in the shortest period of time.

(d) Complexing, chelating, and metathesizing agents are of little value after the activity has gone to dryness.

(e) Successive use of several reagents over short periods of time (1 to 4 hours) appears to produce better decontamination than the use of a single reagent over an extended period of time (24 to 48 hours). It appears that a given reagent may prepare a contaminated surface for attack or removal of radioactivity by the reagents that follow.

(f) Good agitation is necessary for the successful use of any reagent in solution. Stagnant or static liquid films produce little or no decontamination in a short period of time.

(g) The efficiency of a given reagent usually increases as the temperature increases; however, the maximum practical temperature may be limited by corrosion.

(h) Dry-solids contaminants such as dusts should not ordinarily be placed into solution to expedite removal. Vacuum cleaning or flushing with a reagent that does not appreciably dissolve or convert dry solids into the ionic form is much more desirable.

(i) In general, surfaces may be protected from radioactive contaminants by reduction of the surface free energy (used here as analogous to ease of wetting). Coating exposed surfaces with relatively non-wetting membranes such as paint or non-polar plastics is always desirable.

(j) Strippable coatings or other inert membranes where such application is feasible presents the simplest and perhaps the easiest method of decontamination practiced at this time.

4. Factors Influencing Decontamination

The following are some of the factors affecting decontamination procedures in the Purex Plant:

(a) The inactive anions and cations in the Purex process solutions do not normally form insoluble compounds. Hence, any deposits formed by exceeding the saturation point should be removable with water flushes.

(b) The Purex Plant incorporates advanced design for confining process materials within the interior of processing equipment.

(c) The employment of continuous-flow equipment in the Purex process necessitates some mechanical complexity, with the associated possibility of occasional need for equipment replacement and adjustment.

(d) The radioactivity level in processing areas downstream (with respect to uranium and plutonium) from the first decontamination cycle is relatively low, which could permit the maintenance servicing of these areas by contact methods under Special Work Permit (SWP) conditions.

(e) Facilities (Decontamination Cell, Hot Shop, and Regulated Shop), as described in Chapters XI and XV, have been provided for servicing repairable contaminated equipment.

5. Provisions for Application of Decontamination Procedures

5.1 Protective coatings

Structural elements in the plant have been either protected with a chemically resistant coating, such as Amercoat No. 33, 55, or 74, or constructed of 18-8 Cr-Ni stainless steel. Thus, all exposed concrete within the cells has been protected with Amercoat No. 33 or 74, with the exception of the floor areas in the Pool and Decontamination Cells, which are protected with stainless-steel sheathing. Structural-steel elements and certain equipment fabricated from carbon steel have been protected with Amercoat No. 33 or 74. This type of construction facilitates removal of the gross radioactivity by simple water flushing.

5.2 Materials of construction

Process equipment normally wetted by process solutions has been fabricated almost entirely from stainless steel. Some important but relatively small elements utilize Stellite, Kel-F, and Teflon. All of these materials have exceptionally good resistance to chemical attack and are readily decontaminable.

5.3 Design features facilitating decontamination

All equipment normally in contact with process solutions is designed to be fully drainable and flushable. The process equipment also incorporates seals on all pump and agitator shafts, which, in conjunction with the vacuum vent header system, effectively confine radioactive material to the interiors of process equipment.

5.4 Make-up and routing of decontaminating solutions

The Aqueous Make-Up facilities (discussed in Chapter VIII) include a Wash Make-Up Tank (TK-105), which is designed primarily for the make-up of decontaminating-agent solutions. The Wash Make-Up Tank discharges to a Wash Header, which is in turn piped to all tanks feeding Canyon process equipment. Decontaminant solutions may be made up in the Wash Make-Up Tank and routed through the Wash Header to the appropriate Aqueous Make-Up tanks and, thence, to the process equipment in need of decontamination via normal process piping. In some cases it is necessary or advantageous to employ an indirect routing, i.e., to route the decontamination solution through one or more other pieces of process equipment before it reaches the piece to which it is destined. Besides the Wash Make-Up Tank, any of the Aqueous Make-Up tanks may be employed for decontaminating agent make-up.

B. STAINLESS STEEL

The process equipment components (tanks, lines, pumps, etc.) of the Purex Plant are fabricated almost entirely from the 300 series of chrome-nickel stainless steels. The specific type employed has been chosen on the basis of corrosion resistance and the type of fabrication required. The decontamination of stainless steel is consequently of prime interest. Since the problem of decontamination is solved by an empirical approach, discrimination between the types of the 300 series is not justifiable except by reason of the superior resistance to some corrosive conditions of the 25-12 Cr-Ni type over that of the 18-8 Cr-Ni type.

The contamination of stainless steel can be placed in four categories: (a) alpha contaminants on internal surfaces, (b) alpha contaminants on external surfaces, (c) beta and/or gamma contaminants on interior surfaces, and (d) beta and/or gamma contaminants on exterior surfaces. The recommended procedures for removal are based on empirical results obtained at O.R.N.L., H.A.P.O., and other A.E.C. sites. In general, the least corrosive effective decontaminant should be used, so that attack upon the equipment may be maintained at a minimum.

Internal surfaces should be first in the sequence of decontamination because of the greater freedom and control associated with this operation and because these surfaces contain large amounts of easily removable contamination. To produce results of the greatest value, decontamination flushes should be routed from areas of low radioactivity into areas of high radioactivity. Decontaminants that are combined with process wastes for disposal must be compatible with the process solutions so that normal plant production is not interrupted. Cribbable decontaminating solutions must not contain reagents that have an adverse effect on the removal of fission products and plutonium by the soil.(5)

1. Alpha Contamination

1.1 Internal

Alpha (notably U and Pu) contamination inside process vessels assumes relative importance only where the fission-product beta and gamma activities have reached comparatively low levels, i.e., downstream (with respect to uranium and plutonium) from the HA Column, and particularly downstream from the 2A and 2D Columns.

Nitric acid is the preferred decontamination reagent, as the chemistry of the principal alpha contaminants (Pu and U) favors solution in this medium. Sixty per cent acid is the most effective, although lesser concentrations have been used successfully. Some judgment must be exercised as it is possible to roughen highly polished surfaces with concentrated acid (20% or above). Normally, a temperature of 25 to 30°C. is adequate. Generally, physical and chemical principles indicate that higher temperatures would be more effective, although there is very little practical decontamination experience to support this.

1.2 External

The problem of decontaminating external surfaces is complicated by the possibility of extending the contamination to otherwise clean areas. Therefore, caution must be exercised, since the need for decontaminating surfaces adjacent to those originally contaminated may be increased by unrestricted and uncontrolled flushing.

The following precautions should be observed in decontaminating external surfaces:

(a) The redistribution of existing contamination should be limited to the smallest possible area.

(b) Normally the surface should not be flooded with water or other decontaminating agents.

(c) The surrounding surfaces which might be wetted during the decontamination treatment should be protected.

(d) Contaminated materials such as tools, rags, swabs, or gloves should not be placed in uncontaminated areas. Disposable containers such as bags or boxes should be used for storing all cleaning supplies.

The choice of decontamination reagents is based on factors such as the original surface finish, necessity for perserving the finish, and limitations of drainage facilities for solvents or highly radioactive chemical agents. The materials listed below have been found to be useful for room-temperature application, but their relative usefulness has not been fully established.

(a) Sulphuric acid 5%.

(b) Nitric acid 60%.

(c) Chromic acid (corrosive to stainless steel).

(d) Permanganate-bisulfite. The sequence of operations consists of scrubbing the surface with saturated $KMnO_4$ solution, removing the $KMnO_4$ by wiping, scrubbing the surface with 10 per cent $NaHSO_3$ solution, and flushing the surface with water.

(e) Organic solvents; e.g., Stoddard Solvent, CCl_4.

(f) Abrasives; e.g., Bon Ami.

2. Beta and Gamma Contamination

2.1 Internal

Beta and gamma contamination, due primarily to fission products, is of greatest concern in the earliest process steps, i.e., before substantial decontamination factors are accomplished by the process. Since most of the surfaces contaminated with beta and/or gamma contaminants are also likely to be contaminated with alpha contaminants, it is general practice to use nitric acid for the first flush, particularly if any significant amount of plutonium holdup is suspected. Although beta and/or gamma contaminants are not completely removed by nitric acid, it is believed that it is useful in removing the major portion of non-radioactive materials constituting the film in which the radioactivity is bound.

Oxidizing, reducing, and complexing agents have been used successfully. A solution of sodium tartrate in sodium hydroxide has been found to be effective. The concentrations of sodium hydroxide and sodium tartrate are not well defined, but 5 to 20 per cent NaOH and 1.25 to 10 per cent $Na_2C_4H_4O_6$ have been recommended. The addition of hydrogen peroxide to the alkaline tartrate improves its efficiency.(8) Oxalic acid, citric acid, and nitric acid give approximately equal decontamination results. HNO_3 is often preferred because it is the cheapest and most readily available agent.

The use of mixtures of nitric and hydrofluoric acids to remove the final contamination is often necessary. A mixture of 3 per cent hydrofluoric and 20 per cent nitric acid used at room temperature has been found to be an effective reagent.(8) It decontaminates rapidly without excessive corrosion of stainless-steel equipment. The degree of corrosion and of decontamination are not necessarily related.(9) Although some surface corrosion may be necessary for the removal of tightly bound contaminants, corrosion is not always accompanied by good decontamination.

Experience at Hanford has shown that a basic solution of permanganate (1.5% $KMnO_4$, 0.5% NaOH) is very effective for the removal of fission-product contamination, especially of radioruthenium.(2) The ruthenium is believed to be oxidized to a soluble ruthenate, probably RuO_2^- which is soluble in a basic solution.(6) The basic permanganate has been used in

conjunction with a nitric-fluoride-ferrous ammonium sulphate mixture, which removes any precipitated manganese dioxide and additional radioactivity, especially zirconium and niobium.

For successful internal decontamination, frequent changes of decontamination solutions are more beneficial than extended contact time. It has been found that the most rapid dissolution of radioactive contaminants in the decontamination solutions occurs in from 15 minutes to 2 hours, depending upon the solution used.(7)(8) Considerations governing the frequency of solution change include the cost of the disposal of the solution. Adequate agitation is a prime requisite of successful internal decontamination and elevated temperatures usually add to the effectiveness of the flushing solutions.

In addition to these liquid decontaminants, live steam seems to assist materially in the decontaminating process. The mechanism of decontamination with steam is not fully understood. It is conjectured that it penetrates the minute recesses inaccessible to liquids. It is believed that it also acts by the exertion of some abrasive action.

Several brief investigations have been made into the use of electrochemical decontamination as a possible technique for pilot-plant decontamination.(9) Although activity has been removed from the interior of tanks by passing a direct current through 2% H_2SO_4 in the tank with a piece of stainless-steel pipe as a cathode, use of this technique is subject to important limitations:(8)

(a) The radioactivity in the lines, flanges, and valves is not removed by this electro-stripping.

(b) Columns are not adaptable to electro-decontamination because of their length and the difficulty experienced in inserting the electrode.

(c) Ordinarily only a few tanks are equipped with properly located top openings for the insertion of the cathode.

(d) The extension of numerous pipe lines into the tanks interferes with the efficiency of the stripping.

(e) Many tanks cannot be reached until a preliminary chemical decontamination has been completed.

2.2 External

The plant areas in which external beta and gamma contamination is of potential concern coincide with those in which beta-gamma internal contamination levels are high. This problem is the most difficult of the four discussed because (a) the flush solution is not confined by equipment, and (b) precautionary measures to restrict the spread of contamination by the decontamination agents cannot be employed nearly as effectively as with alpha contamination, because the range of the gamma rays often prohibits the approach of personnel to the contaminated surfaces. The decontaminating

agents recommended for the removal of internal contamination (under B2.1, above) can also be employed for the removal of external contamination. To assist in carrying the contamination from the decontaminated areas to the sump or drain, the entire area undergoing decontamination should be liberally flushed with water as a concluding treatment.

The method of applying external decontaminating agents will vary widely with the amount of radioactivity present in the area to be decontaminated. If the radiation level is sufficiently low to permit entry of personnel, the solutions may be applied manually by mop or preferably by brush or broom. This application may be followed by steam cleaning and water flushing or water flushing alone.(2)

If the radiation level does not permit entry by personnel, the decontamination solutions may be applied from the closest point of vantage by means of a pump or jet and a spray nozzle. Repeated applications of the decontamination solutions followed by water flushes or steam cleaning and water flushing usually reduces the radiation sufficiently to permit eventual entry by personnel.

The use of ultrasonics in decontamination is currently being investigated. The principle involved is the impression of ultrasonic energy on a stream of liquid flowing through a nozzle. The ultrasonic waves travel down the liquid stream in the nozzle and out through the nozzle. Ultrasonic waves propagating through a liquid medium are attenuated very little and hence will travel the full length of the unbroken steam. However, for the most part the energy is reflected by any liquid-gas boundary and so the waves will travel only as far as the liquid stream is not broken up into droplets. For this reason, it is desirable to employ a solid stream instead of a spray from a nozzle. The droplets that are produced when the stream finally breaks into a spray are in a state of intense vibration and the vibration persists for a sufficiently long time to produce an abrasive action and hence a cleaning effect.(1)

3. Procedure for Decontamination

The general procedure for internal decontamination usually starts with a nitric acid flush to remove any recoverable plutonium present. Decontamination itself is then accomplished by successive flushes with suitable decontaminating agents kept in the vessels, with agitation, generally at elevated temperatures for the proper period of time. The following table lists the various steps of a decontaminating procedure, the basic steps of which were used to decontaminate the Hanford Hot Semiworks equipment after Redox-process studies at full Hanford radioactivity levels. In addition to the reagent, time, and temperature conditions, the contaminant most likely to be removed by the specific flush has been included.

REVISED HOT SEMIWORKS DECONTAMINATION PROCEDURE

Step	Reagent	Temp., °C.	Time, Hr.	Contaminant Removed
1	5% HNO_3	80	1/2	Process-sol'n. heels
2	5% NaOH-2% $Na_2C_4H_4O_6$	80	4	Zr-Nb
3	5% Oxalic Acid	80	4	Zr-Nb
4	0.5% NaOH-1.5% $KMnO_4$	40	1	Ru[a]
5	1% NaOH	80	1/2	Ru[b]
6	5% Oxalic Acid	80	4	Zr-Nb
7	Repeat 4 and 5			
8	5% HNO_3-1% NaF-2% $Fe(NH_4)_2(SO_4)_2$[c]	30	1	Zr-Nb

Notes: (a) Two per cent Perchlaron (70% by weight calcium hypochlorite, 30% inert material) was used at K.A.P.L. for ruthenium decontamination. Although ruthenium was satisfactorily removed, some plugging of valves and jets occurred, possibly because of incomplete dissolution of the inert material.[7]

(b) The NaOH flush is used to remove ruthenium after it has been oxidized by the $KMnO_4$.

(c) The $Fe(NH_4)_2(SO_4)_2$ removes the MnO_2 formed by the reduction of the $KMnO_4$. The fluoride is used to assist in removing the last traces of Zr-Nb. If fluoride is not compatible or desirable, it may be omitted although the effectiveness of the flush is reduced.

External decontamination is accomplished by application of a suitable reagent by the most effective means available. Abrasive action applied either manually or by some other means, such as a steam cleaner, usually assists in contamination removal. The contamination loosened from the surface should be flushed away with water.

In order to select a suitable decontamination reagent, smears of the contaminated area may be used to determine the specific fission products present.

C. OTHER MATERIALS OF CONSTRUCTION

1. Iron and Carbon Steel

Iron and carbon steel have been employed for machine and structural elements (e.g., electric motors, jumper braces) which are not normally wetted by process solutions. As installed, these elements are protected by a chemically resistant coating, Amercoat No. 33 or No. 74. The type of contamination expected on these surfaces follows the pattern given in Section C of this chapter. Experience with decontamination of unprotected iron or steel has been generally disappointing. Complete removal of the contaminated piece usually is the most practical solution to the problem.

Nitric acid, although effective in decontaminating chrome-nickel steels, is not effective in the decontamination of unprotected iron and steel. The degree of re-adsorption of the highly diluted, radioactive elements by the freshly formed, unoxidized metallic surface appears to create a practical obstacle which limits the decontamination. In addition to the ineffectiveness of acidic solutions, their use increases the difficulty of successfully removing the contamination with subsequent decontaminating agents because of the surface-etching effect of the acid.

Alkaline solutions (sodium carbonate, alkaline permanganate) and detergents have been found the most effective of the agents tried in the Hanford Hot Semiworks.(2)

2. Concrete

Concrete, in the absence of a protective surface coating, retains contaminants to a high degree. Chemical or physico-chemical reagents have not been effective in removing either chemically fixed or physically adsorbed radioactivity. The Purex Plant has been designed and constructed on the basis that concrete surfaces will always be protected by a chemically resistant coating (Amercoat 33 or 74). In the event of contamination which penetrates through to the concrete base material, only two courses appear practical: (a) physical removal of the contaminated surface, or (b) shielding of the contaminated concrete surface to permit necessary maintenance work in the immediate area of contamination.

Experience at the Hanford Hot Semiworks has indicated that spots of gross contamination imbedded in unprotected concrete may be reduced somewhat by repeated alternate treatments with sodium carbonate paste (or solution) and dilute (3 to 5%) nitric acid. The effervescing action produced by the two reagents helps to lift some of the contamination out of the concrete, so that it can be flushed away with water. However, because of the destructive action of the nitric acid on the concrete, part of the remaining contamination is usually forced deeper into the concrete, thus making complete removal of the contamination practically impossible.

3. Glass

Glass finds its greatest application in the construction of laboratory equipment. Accordingly, the type of contamination may vary widely. A

five per cent solution of NH_4HF_2 has been effective in decontaminating glass at O.R.N.L. Etching does not result if the time of contact is kept to a minimum (a few minutes).(4)

Nitric acid in concentrations of 20 to 60 per cent is also used effectively for decontaminating laboratory glassware. The more concentrated solutions are used for soaking the equipment while the less concentrated are usually used for swabbing. Laboratory cleaning solution (95% sulfuric acid saturated with sodium dichromate) is another effective agent for decontaminating glassware.

4. Lucite and Plexiglass(3)

Lucite and Plexiglass (polymerized methyl methacrylate), transparent thermoplastics, are construction materials employed in the P.R. Room and also find numerous applications as a component in laboratory equipment. The transparency of Lucite is an essential requirement in its P.R. Room applications; therefore, precautions must be taken to use decontaminating agents which do not cause "fogging". In laboratory applications, loss of transparency is of less concern. Cleaning solution (95% sulfuric acid saturated with sodium dichromate), routinely used in laboratories as a decontaminating agent for Lucite, causes "fogginess", which increases with the number of applications.

The primary contaminant in the P.R. Room is plutonium in an aqueous nitric acid system. A suitable procedure for removal of plutonium contamination is as follows:

(a) The adjacent uncontaminated areas are protected with absorbent paper.

(b) Five to ten per cent nitric acid is applied by swabbing. (Nitric acid in concentrations in excess of 20% attacks Lucite.) The swabbed area is permitted to remain wet for 3 to 5 minutes.

(c) The nitric acid is removed by sponging the surface with water.

(d) A detergent, 1% Muslor 224 or a saturated aqueous solution of Calgon, is applied by swabbing or sponging. (Muslor 224 is a product of Synthetic Chemicals, Inc., Patterson, N.J.; Calgon, of Calgon, Inc., Pittsburgh, Pa.)

(e) The detergent is removed with water.

(f) The surface is dried with a soft, clean, non-abrasive cloth or paper.

Personnel carrying out the decontamination must be adequately protected from alpha contamination present. In order to avoid recontamination of the surface, separate containers must be provided for clean and used cleaning materials.

The transparency of a polished Lucite surface may be impaired and permanent fixation of plutonium may be caused if the surface is wetted by a reagent in which Lucite is soluble. Since Lucite is soluble in many common organic solvents, no organic solvents should normally be used for cleaning or decontaminating it.

5. Wood

Wood is utilized primarily for structural or equipment items, such as office fittings and furniture, not normally subject to contamination. Occasional temporary requirements may result in the introduction of wood into process or laboratory areas. Decontamination of wood is extremely difficult because of its porous, absorbent structure.(4) Protection from fixation of activity is dependent upon the applied protective coating. In the event that contamination penetrates the protective coating, either partial or complete removal of the wood appears to be the most practical and economical procedure.

D. PROTECTIVE COATINGS

Protective coatings employed in the Purex Plant for application to steel and concrete surfaces are Amercoat No. 33, 55, and 74. These coatings provide a protective film that is smooth, chemically resistant to process and decontaminating solutions, and not readily wetted by them. (For a discussion of protective coatings, reference is made to Chapter XVI.)

Since the protective films are the only barrier to essentially permanent contamination of the base materials, it is important to use a decontaminant which will inflict the minimum damage to the coating. Highly reactive materials such as nitric acid, chromic acid, or caustic soda should be used as sparingly as possible and only in dilute solutions. The following agents, listed in order of preference, are recommended.

(a) Water.

(b) Detergent solutions.

(c) Complexing agents, oxalates, citrates, tartrates.

(d) Alkaline permanganate-oxalic acid. This requires direct manual application of 1-1/2 per cent $KMnO_4$-1/2 per cent NaOH solution for a 5 to 10-minute period followed by an application of 1 to 2 per cent NaOH solution and, in turn, by a water flush. Manual application of 5 per cent oxalic acid followed by a water flush completes the procedure.

(e) Other decontaminating agents listed in Subsection D2.

E. SKIN

Skin decontamination is especially important because of the danger of the entrance of contaminants into the body, either orally or through skin breaks.

The rate of skin decontamination varies considerably among individuals and is largely dependent on the original condition of the skin. In all cases where a rough outer layer of skin is present, decontamination is more difficult until this outer layer is removed and the skin surface is polished.

It has been found at Hanford that the best decontaminating agent for removal of uranium contamination is a mixture of sodium bicarbonate and a detergent (such as Duponol, made by E.I. du Pont de Nemours & Co.) combined in a one-to-one ratio and applied to the wetted, contaminated skin. The material should be worked into a lather for about one minute, then rinsed off under running water.(4) The procedure should be repeated if all the contamination has not been removed.

During the removal of plutonium and fission-product contamination from the skin, extreme care should be exercised to prevent the spread of contamination to the clean areas of the body. The following procedure is used for the removal of both plutonium and fission-product contamination:

(a) The contaminated area is carefully swabbed with liquid soap until a good lather is obtained. The lather is removed with water swabs. The procedure should be repeated until all loose contamination is removed.

(b) If the contaminant is still present, the area is swabbed with 4% $KMnO_4$ solution. Three applications, with drying between successive applications, are normally made. The color produced by the $KMnO_4$ is removed with swabs soaked in 4% $NaHSO_3$ solution. The area is then swabbed with liquid soap and finally swabbed with water.

(c) If the contamination remains, Step (b) is repeated.

F. CLOTHING

In those areas within the separations plants where there is a hazard of personnel contamination with radioactive materials, all persons entering are required to wear coveralls, shoe covers and/or overshoes, caps, and gloves, as a protection against contamination of skin and street clothing. This outer protective clothing is called Special Work Permit (SWP) clothing. In addition to these items, towels, socks, and shoes are furnished where required. The SWP clothing is monitored for contamination both before and after laundering. Articles of clothing registering less than 10,000 disintegrations/min. and/or 6 mrad/hr. may be sent to the laundry in the regular SWP laundry bags. All items contaminated to levels higher than 10,000 dis./min. and/or 6 mrad/hr. but less than 40,000 dis./min. and/or 50 mrad/hr. are wrapped in a labeled impregnated-paper bag ("powder bag") or package and placed beside the proper laundry hamper. Protective clothing contaminated in excess of 40,000 dis./min. and/or 50 mrad/hr. is discarded in the contaminated waste container, for eventual disposal by burial.

In the laundry, non-SWP clothing is handled separately from the SWP clothing. All towels, socks, and non-SWP clothing are washed in equipment used only for such clothing. Ozonite (a detergent) plus Wyandotte 33 (an abrasive powdered clay) is used as a washing agent for this clothing.

A special procedure is used for washing normal SWP clothing (<6 mrad/hr.). Acetic acid is first used to effect the removal of all radioactive contaminants. After a water rinse, washing with Ozonite plus Wyandotte 33 and soda ash completes the process. If the survey after washing indicates any residual contamination, the procedure is repeated until all contamination has been removed. More highly contaminated clothing (6 to 50 mrad/hr.), wrapped separately, is collected until a quantity sufficient to warrant separate washing has been collected. SWP rubber goods are decontaminated by use of acetic acid and then washed.

REFERENCES

(1) R. W. Samsel, Letter to J. E. Kaveckis: Decontamination by Ultrasonics. H.A.P.O. 8-26-53.

(2) G. C. Oberg and R. E. Tomlinson, Private communications re decontamination experience at the Hanford Hot Semiworks. H.A.P.O. July, 1954.

(3) IDO-26081 A General Decontamination Manual for the Idaho Chemical Processing Plant. C. D. Watson. 3-11-53.

(4) HW-18700 Redox Technical Manual. Author not stated. 7-10-51. Pp. 2301-2315.

(5) HW-27774 Final Report--Decontamination of 221-224-B Process Equipment. M. N. Raile. 4-20-53.

(6) HW-30325 The Removal of Ruthenium Contamination from Surfaces by Alkaline-Permanganate. A. S. Wilson. 12-21-53.

(7) KAPL-809 Pilot Plant Progress Report, August, September, October, 1952. C. F. Steiner and J. F. LaBonte.

(8) ORNL-1242 Decontamination of ORNL Purex Pilot Plant. H. P. Wood. 5-5-52.

(9) ORNL-535-233 Decontamination of Stainless Steel: Survey and Proposed Program. D. O. Campbell. 5-18-53.

PART V: SAFETY, continued

CHAPTER XXII. HAZARDS OTHER THAN RADIATION

CONTENTS Page

A. FLAMMABILITY AND EXPLOSIVENESS 2202

1. Definition of Terms 2202
2. Solvent 2202
   2.1 Flammability properties 2203
   2.2 Extent of solvent handling hazard 2204
   2.3 Plant precautions 2204
3. Hydrogen 2205
   3.1 Explosive limits of hydrogen 2205
   3.2 Evolution of hydrogen during feed preparation 2205
   3.3 Evolution of hydrogen during preparation of ferrous sulfamate solution 2206
4. TBP-Nitric Acid and TBP-Uranyl Nitrate Reactions 2206
   4.1 Nature and conditions of the reactions 2206
   4.2 Location and extent of hazard 2206
   4.3 Plant precautions 2206
5. Rapid Nitration of Diluent 2207
6. Sodium Nitrate 2207

B. PHYSIOLOGICAL EFFECTS OF PROCESS CHEMICALS 2207

1. TBP (Tributyl Phosphate) 2208
2. Diluent 2208
3. Nitric Acid 2209
4. Oxides of Nitrogen 2210
5. Sulfuric Acid 2212
6. Sodium Hydroxide 2213
7. Uranium, Plutonium, and Radioactive Fission Products 2214
8. Other Process Chemicals 2214

REFERENCES 2214

[redacted]

[redacted]

CHAPTER XXII. HAZARDS OTHER THAN RADIATION

In this chapter the nature and extent of fire, explosion, and physiological hazards from Purex process chemicals are discussed. Design features incorporated into the plant to eliminate or minimize these hazards and any special operational precautions required are reviewed.

A. FLAMMABILITY AND EXPLOSIVENESS

Potential fire and explosion hazards in the Purex Plant arise primarily from the use of a moderately flammable organic solvent. Another potentially hazardous material, besides the solvent, is hydrogen gas, evolved in certain process steps. Suppression of fire and explosion hazards has been a prime consideration in the design of the Purex process and of the Purex Plant. This section of the manual is a discussion of these hazards with particular emphasis on (a) their extent, (b) engineering features designed to eliminate or minimize them, and (c) any special operational precautions required.

1. Definition of Terms

Definitions of special terms used in this chapter relative to flammability and explosiveness are presented below. Flash point is the lowest temperature at which sufficient vapors are given off by a liquid to form flammable vapor-air mixtures capable of ignition by an open flame. The flash point may be taken as one index of fire hazard. Flash-point determinations may be made in either closed-cup or open-cup apparatus. The results from open-cup determinations are affected by conditions of the room atmosphere and are usually several degrees higher than closed-cup flash points.

Ignition temperature is the lowest temperature at which a flammable gas or vapor ignites spontaneously without the application of visible means of ignition.

Fire point is the lowest temperature at which a liquid will vaporize sufficiently to burn continuously when ignited.

Lower explosive limit (L.E.L.) is the lowest percentage, by volume, of flammable vapor in air in which flame propagation can occur.

Upper explosive limit (U.E.L.) is the highest percentage, by volume, of flammable vapor in air in which flame propagation can occur.

Vapor-air mixtures with vapor concentrations below the lower or above the upper explosive limit are said, respectively, to be too "lean" or too "rich" to support combustion. Flashes of flame may appear, but the flame will not propagate at an explosive rate.

2. Solvent

The solvent used in the Purex Plant is a solution of tributyl phosphate (TBP) in a hydrocarbon diluent of the kerosene class. While both

components are combustible, their relatively low volatilities and high flash points preclude the possibility of fire or explosion under normal prescribed conditions of their use in the Purex Plant. Potential hazards exist, however, from abnormal or non-standard conditions.

2.1 Flammability properties

The flash and fire points of several potential components of a Purex solvent are noted below.

TBP, Diluent, and TBP-Diluent Mixtures	Flash Point, °F. Tag Closed Cup(14)	Open Cup(15)	Fire Point, °F.(15)
Shell Deodorized Spray Base**	150	180	185
Shell Deodorized Spray Base + 12.5% TBP(by vol.)**	155	---	195
Shell Deodorized Spray Base + 30% TBP**	162*	---	---
Standard Oil Base Oil "C"	143	165	165
Standard Oil Base Oil "C" + 12.5% TBP	---	185	185
Deobase	162	185	195
Deobase + 12.5% TBP	---	200	200
Ultrasene	161(16)	---	---
Ultrasene + 30% TBP	163(16)	---	---
Soltrol - 170	192	---	---
TBP	295(15)	---	---

*) Extrapolated from data presented in Reference (14).
**) Shell Spray Base data also apply to Shell E-2342.

Addition of TBP to diluent lowers the diluent vapor pressure in proportion to the amount of TBP added, and consequently raises the fire and flash points. It is most probable that Shell Deodorized Spray Base, or a hydrocarbon with very similar properties, containing 30% TBP by volume will be used as the Purex solvent. Since the maximum operating temperature for Purex solvent in contact with air is about 120°F., a comfortable margin of safety exists between the flash point of the solvent and normal operating conditions.

Properties of specific diluents, other than fire points or flash points, have not been reported. The values shown below are for kerosene, and may be regarded as approximately correct for typical Purex diluents.

Lower explosive limit: 1.16% by volume (8)

Upper explosive limit: 6.0% by volume (8)

Ignition temperature: 490°F. (8)

2.2 Extent of solvent handling hazard

The bulk of the solvent within the 202-A and 276-A Buildings is normally handled by the following solvent feed tanks:

Name of Vessel	Vessel Number
1TO TK-A	TK-G5
1TO TK-B	TK-G7
2TO TK-A	TK-R5
2TO TK-B	TK-R7
Recovered Solvent Tank	TK-324

These tanks have a total working volume of 49,000 gal. and the normal in-process inventory will approximate this volume.

Diluent and TBP storage facilities are provided in the 211-A Chemical Tank Farm. The following tanks are located in this area:

Name of Tank	Tank Number	Nominal Tank Volume, Gal.	Normal Tank Inventory, Gal.
Diluent Storage Tank	TK-40	65,000	50,000 to 60,000
TBP Storage Tank	TK-41	30,000	25,000

The fire and explosion hazard is small in both of these areas. Flammable vapor-air mixtures are not produced at normal operating temperatures and heating of the solvent is not contemplated. The 211-A Chemical Tank Farm is an outdoor installation, and the tanks within this area are vented to the atmosphere.

2.3 Plant precautions

Fire prevention in the Purex Plant is accomplished by keeping the solvent concentration in air too "lean" to support combustion. A further safety factor is achieved by avoiding sparks through the use of non-sparking tools and rotating equipment. Since the Purex process uses a solvent which at the prevailing temperatures is below its flash point (a "Class III" solvent), the use of an inert-gas blanket is not required for flammability control. Fire detection and control in process areas is through the use of Fireye and temperature-activated alarms and manually operated fire-fog units.

In the prevention of fire by maintaining vapor concentrations too lean to support combustion, primary reliance is placed on the control of the

temperature of the solvent and/or diluent. As noted above, the flash point of Shell Deodorized Spray Base containing 30 volume per cent TBP in air is about 162°F., whereas the highest temperature attained by the solvent in contact with air in the Purex process is about 120°F.; this 40°F. differential is provided to compensate for operational and instrument variations and to provide a margin of safety. The accumulation of potentially dangerous pockets of vapors in process areas is prevented by adequate ventilation, as described in Chapter XI. Additional provisions to avoid solvent fires are made by using non-sparking tools and rotating equipment in solvent-handling areas, where all electrical equipment is installed in accordance with the National Electrical Code(11) requirements for handling Class III solvents.* Spark-producing devices, such as switches, relays, and fuses, are installed in zones where solvent vapors are essentially absent. Detailed design criteria for the electrical equipment in the Purex Plant are contained in Reference (17).

The detection of fires in the processing areas is primarily by use of Fireyes, photoelectric devices which "see" a fire and activate an alarm. Sensing elements "view" each cell of the Canyon, the Head Tank Room, the Organic Make-up Tank, and the Organic Vault (276-A Building), and activate an alarm in the Central Control Room when a fire is detected. An auxiliary detection device is a multipoint temperature recorder which activates an alarm in the Central Control Room whenever an unusually high air temperature is detected in any of the Canyon cells. A sectionalized fire-fog system is provided for each of the Canyon cells and organic handling areas. The manual controls for the remotely operated valves in the fire-fog system are located in the Central Control Room.

3. Hydrogen

3.1 Explosive limits of hydrogen

The physical properties of hydrogen pertinent to flammability and explosiveness are listed below:(10)

Ignition temperature:	1085°F.
Lower explosive limit:	4.1% by vol. in air
Upper explosive limit:	74% by vol. in air

3.2 Evolution of hydrogen during feed preparation

The evolution of hydrogen during the jacket removal operation is suppressed by the addition of sodium nitrate to the sodium hydroxide solution. Data have indicated a maximum hydrogen content of 1% in the off-gas during jacket removal operations. The chemistry of jacket removal is discussed in Chapter III.

---

*) The design of electrical equipment and electrical connectors, in accordance with these requirements, is not of the "explosion-proof" type and is not suitable for use with a flammable liquid at or above its flash point, even though it meets approved safety standards for handling Purex-Plant diluent and TBP-diluent mixtures at the temperatures discussed above.

3.3 Evolution of hydrogen during preparation of ferrous sulfamate solution

In the preparation of a 7-day supply of ferrous sulfamate solution, about 4200 cu.ft. of hydrogen are produced during the reaction of iron powder and sulfamic acid, the bulk of the hydrogen being produced during the first hour of preparation. Ignition of hydrogen is prevented by blanketing the Ferrous Sulfamate Make-Up Tank, TK-103, with nitrogen supplied from cylinders. The inert-gas purge and gaseous reaction products are discharged to the atmosphere outside the building through an individual stack equipped with a seal pot and damper-blower assembly.

4. TBP-Nitric Acid and TBP-Uranyl Nitrate Reactions

4.1 Nature and conditions of the reaction

Tributyl phosphate is capable of reacting exothermically with heated solutions of nitric acid and/or uranyl nitrate. The reaction may proceed with various degrees of vigor, depending on the temperature and composition of the reacting mixture. Under extreme conditions it may assume disruptive violence.(13) The temperature required for initiation of a rapid TBP-HNO_3 or TBP-$UO_2(NO_3)_2$ reaction is a function of the composition of the reacting mixture. However, tests at atmospheric pressure have indicated that the temperature of the charge must be in excess of 265°F. (130°C.) for a rapid TBP-$UO_2(NO_3)_2$ reaction to take place, and above 285°F. (140°C.) for a rapid TBP-HNO_3 reaction. A more detailed discussion of the chemistry of these reactions appears in Chapter IV.

4.2 Location and extent of hazard

The potential hazard of a rapid TBP-HNO_3 or a TBP-$UO_2(NO_3)_2$ reaction is present only in the uranium, plutonium, and waste concentrators. These continuous concentrators normally operate at a temperature below 240°F., which is safely below the 265°F. or 285°F. temperatures required to initiate a rapid TBP-$UO_2(NO_3)_2$ or TBP-HNO_3 reaction. Also, TBP is normally present only in negligibly low concentrations in these concentrators. The potential hazard arises from accidental introduction of TBP into the concentrators coinciding with accidental over-concentration of the aqueous liquid to a composition at which the boiling point exceeds the temperature required for initiation of the TBP-HNO_3 or TBP-$UO_2(NO_3)_2$ reaction.

4.3 Plant precautions

The Purex Plant is designed to prevent a rapid TBP-HNO_3 or TBP-$UO_2(NO_3)_2$ reaction by minimizing the concentration of TBP in the process concentrators and by limiting the maximum temperature permitted in these vessels to a value well below the temperature required to initiate the rapid reaction. The presence of TBP in the concentrators is minimized by passing the aqueous feeds through pulse-column liquid-liquid disengaging sections with a minimum residence time of approximately ten minutes (at ten tons uranium per day). In addition, the feeds to the uranium and plutonium concentrators are steam stripped prior to entering the heat-exchange zones. Safety devices are also provided to

prevent an accidental overconcentration of process solution with an accompanying temperature high enough to initiate a rapid TBP-HNO_3 or TBP-$UO_2(NO_3)_2$ reaction. These devices are noted below.

Safety Feature	Activation Condition: U, Pu Concentrator; Waste Rework Tank	Activation Condition: Waste Concentrator
Solution high-temperature alarm.	250°F.	265°F.
Solution high temperature shuts off steam supply.	260°F.	280°F.
High pressure in steam chest shuts off steam supply.	30 p.s.i.g.	40 p.s.i.g.
Low liquid level shuts off steam supply.	When upper dip tube for specific gravity measurement is not submerged.	

A more detailed discussion of the concentration of uranium and plutonium solutions, and of acid recovery and waste concentration is presented in Chapters VII and X, respectively. For information on the design of the concentrator safeguard instruments reference is made to Chapter XVII.

5. Rapid Nitration of Diluent

Because of the known reactivity of HNO_3 with olefins to form potentially hazardous dinitro-olefins (and to a lesser extent with aromatic hydrocarbons), the hydrocarbon diluent used in the Purex process should be essentially free of olefins and aromatics. To preclude the possibility of such nitrating reactions in the Purex Plant, diluent specifications conservatively permit a maximum olefin-plus-aromatic concentration of only 2 per cent. Although the maximum safe olefin concentration in the solvent has not been demonstrated experimentally, diluent meeting the above specification (2 per cent olefins plus aromatics) is known to be well on the safe side.

6. Sodium Nitrate

Sodium nitrate contains a high fraction of oxygen, some of which is released at high temperatures and can support the combustion of any flammable material in the proximity.(10) Because of this characteristic, sodium nitrate is kept isolated from organic liquids or other easily oxidizable materials. This chemical is received and stored in paper bags, each containing 100 lb., in the 2714-A Warehouse.

B. PHYSIOLOGICAL EFFECTS OF PROCESS CHEMICALS

This review of the physiological effects of the process chemicals is presented to assist supervision in recognizing and minimizing the health hazards involved in the operation of the Purex Plant. Detailed handling procedures and first-aid advice for specific exposure instances are beyond the scope of this section.

Maximum allowable concentrations (M.A.C.) are given for those materials which may be present as a gas, mist, or dust. The maximum allowable concentration is defined as the maximum concentration in air of a dust, fume, or vapor to which a worker may be exposed for 8 hours daily, without significant harmful effects.

In the Purex process the chemicals which may present a health hazard are TBP, diluent, nitric acid, oxides of nitrogen, sulfuric acid, sodium hydroxide, uranium, plutonium, and radioactive fission products.

1. TBP (Tributyl Phosphate)

TBP is a colorless, odorless organic liquid, which is used commercially as a plasticizer.(7) Due to its very low volatility, TBP vapors are seldom present.

1.1 Physiological effects

No toxic effects due to TBP are specified in the literature. It is expected that TBP, like most organic solvents, will dissolve the oils of the skin, causing cracking and irritation.

1.2 Tolerance concentrations

No limits are specified in the literature for either external exposure or ingestion.

1.3 Extent of hazard

Drums of TBP are received in carload lots and are emptied by a portable pump into the 30,000-gallon TBP Storage Tank, TK-41, at the 211-A Chemical Tank Farm. All other handling of TBP is accomplished with permanently installed pumps and piping. Thus the possibility of TBP contacting the skin during sampling or unloading operations presents the only recognized hazard.

1.4 Precautions

Equipment for handling TBP was designed in accordance with normal, safe chemical-plant practice.

2. Diluent

Hydrocarbon diluent is a highly refined kerosene whose physical properties and appearance compare with commercial grades of kerosene. Diluent vapors will tend to settle and accumulate at low points, since they are heavier than air.

2.1 Physiological effects

Diluent is physiologically classed as an irritant. Inhalation of the vapor causes irritation of the mucous membranes of the eyes and nose. Watering of the eyes and coughing, with expectoration, are

evidences of internal irritation. In common with other organic solvents, diluent has the property of dissolving the oils of the skin, causing dryness, cracking of the skin, and irritation. Also, under unusual conditions, diluent may be an anesthetic hazard. The early symptoms are impairment of mental and physical faculties and dizziness. If the symptoms of dizziness or irritation to the eyes and nose are experienced, the affected individual should get fresh air immediately.

2.2 Tolerance concentrations

No limits are specified in the literature. The maximum allowable concentration for Stoddard Solvent, a hydrocarbon distillate similar to the Purex diluent, is about 500 p.p.m.(3)

2.3 Extent of hazard

Normally, the diluent inventory consists of 35,000 to 50,000 gal. in the 202-A and 276-A Building process vessels and up to 60,000 gal. in storage at the 211-A Chemical Tank Farm. The possibility of diluent contacting the skin during sampling operations or because of leaks or spills is the greatest potential hazard to be encountered in handling the diluent. Hazardous vapor concentrations might arise if large volumes of diluent were to be released in an operating area in some manner, such as by rupture of piping or process equipment at the Solvent Blend Tank, TK-R1A, located in the 202-A Building.

2.4 Precautions

Equipment for handling diluent is designed in accordance with normal, safe chemical-plant practice. In the 202-A and 276-A Buildings, the ventilation system maintains diluent vapors below hazardous concentrations. The 211-A Chemical Tank Farm is an open area which permits hazardous vapors to escape to the surrounding atmosphere, where they are diluted to negligibly low concentrations.

3. Nitric Acid

Nitric acid is a highly corrosive, mineral acid. The proper types of protective gloves, clothing, and goggles must be worn when handling this material.

3.1 Physiological effects

Indication of the magnitude of the contact hazard of nitric acid is given by tests which have shown that 70% HNO_3 produces definite skin burns in 5 to 15 seconds. Burns of first, second, or third degree may result from nitric acid contact. Skin which has contacted nitric acid must be washed with water immediately before it can cause very severe, possibly permanent damage.

In cases of ingestion, severe internal burns may be experienced. The patient should be given copious amounts of a lukewarm fluid such as salt solution, soapy water, or milk, followed by egg whites and milk. Vomiting

should be induced as soon as possible. Emetics and carbonates should be avoided.

3.2 Tolerance concentrations

While a prolonged contact with dilute (say less than 5%) nitric acid will cause stinging and mild irritation of the skin, contact with concentrated (say greater than 50%) acid will cause severe burns in a matter of seconds. Precautions should be taken to keep such contacts at an absolute minimum.

The ingestion of nitric acid should be avoided. While no permissible limits were found in the literature, the ingestion of 10 ml. of concentrated acid is considered fatal.

When nitric acid is present as a mist, concentrations as low as 100 p.p.m. may cause irritation of the mucous membranes of the nose, throat, and lungs. A few breaths of vapors containing 200 to 700 p.p.m. of nitric acid can produce severe pulmonary damage which may cause death in five to eight hours.(10)

3.3 Extent of hazard

The daily process consumption of 60% nitric acid is about 10,000 gal., when the plant is processing 10 tons of uranium per day. The greatest contact hazards occur in equipment decontamination and in sampling solutions containing nitric acid. Appreciable concentrations of nitric acid as a mist will not normally be encountered in the Purex Plant. However, nitric acid mist may be generated in exceptional circumstances--for example, when nitric acid is moved by air pressure from one vessel to another (an expedient not normally resorted to in the Purex Plant) and the compressed air permitted to vent through the receiving vessel.

3.4 Precautions

As previously indicated, the proper types of protective gloves, clothing, and goggles must be worn when handling nitric acid. Standard chemical-plant design practice was followed in installation of the nitric acid handling facilities. Deluge-type safety showers and hose bibs are provided at strategic locations in operating areas to provide for rapid washing in cases of surface exposures, and should be kept operative and accessible.

4. Oxides of Nitrogen

Oxides of nitrogen are formed when nitric acid contacts organic or reducing materials such as uranium, sawdust, iron filings, etc. These oxides, known generally as "nitrous fumes", consist of a mixture of NO, NO_2, and N_2O_4.

4.1 Physiological effects

The inhalation of nitrous fumes in concentrations above 60 p.p.m. at first causes a painful burning and choking sensation. Exposure to

concentrations greater than 120 p.p.m. may cause immediate loss of consciousness. In either case, the after-effects of the exposure can be very serious, leading to pulmonary edema (swelling of the lung tissue due to effusion of a watery liquid into the cellular tissue), developing several hours after exposure. The greatest danger from nitrous fumes is from exposure to concentrations of less than 60 p.p.m. Concentrations in this range do not cause any immediate discomfort, but can result in a delayed effect.(4) The danger signals are headache, spasmodic coughing, a choking sensation, and/or a burning skin.

Complete rest is very important after inhalation of nitrous fumes. The individual should be removed, or remove himself, from the nitrous-fume atmosphere immediately. It is important that the exposed individual be kept warm and removed to a hospital immediately.

4.2 Tolerance concentrations

The effects of nitrous fumes over a wide concentration range are listed below:(5)(6)(10)

Concentration, as NO_2, in Parts per Million	Physiological Response
200 to 700	Rapidly fatal for short exposures. (1/2 hr. or less at 700 p.p.m.)
100 to 150	Dangerous for even a short period. (1/2 to 1 hr.)
100	Least amount causing coughing.
10	Maximum concentration (M.A.C.) for continuous exposure according to Massachusetts state law, recognized by most authorities.(12)

4.3 Extent of hazard

The greatest hazard of exposure to nitrous fumes comes from the fact that its serious effects are not felt until several hours after the exposure. Nitric acid contact with organic materials or metals, due to spills or improper decontamination procedures, represents the chief source of such fumes, and care should be exercised in all cases where nitrous fumes are observed.

4.4 Precautions

Nitrous fumes are best handled by controlling the processes that produce them so that their concentration never exceeds the allowable maximum. If it is necessary for an individual to enter an area where nitrous fumes are present, he should be equipped with a suitable air mask and protective clothing.

The presence of oxides of nitrogen may be detected by odor and, to a certain extent, by color.(9) A characteristic odor is distinct at concentrations of less than 5 p.p.m. in air. In well-lighted areas, 100 p.p.m. or more of nitrogen dioxide (NO_2) in air exhibits a visible, reddish-brown tint. It should be noted, however, that other oxides of nitrogen (NO and N_2O_4) are practically colorless and that the relative proportions of the different molecular forms are temperature dependent. Thus, an atmosphere colored by oxides of nitrogen is probably dangerous, but the absence of color does not necessarily indicate safety.

The concentration of oxides of nitrogen in air can be determined precisely over the range of 5 to 500 p.p.m. by volume by means of the phenoldisulphonic acid method.(1)

5. Sulfuric Acid

Sulfuric acid is a corrosive mineral acid widely used in the chemical industry. In handling sulfuric acid the proper types of gloves, clothing, and goggles must be worn.

5.1 Physiological effects

Sulfuric acid causes severe burns on contact with the skin. Concentrated sulfuric acid is a strong dehydrating agent, and this property causes the burning and destructive action associated with it. Sulfuric acid mist or vapor affects the upper respiratory tract, but the action is not severe.

Sulfuric acid splashes on the skin should be rinsed immediately with copious quantities of water. In case of ingestion of sulfuric acid, the patient should be given milk of magnesia, up to 8 fluid ounces, and quantities of water or milk, followed with egg whites and milk. Emetics and carbonates should be avoided.

5.2 Tolerance concentrations

The maximum allowable concentration (M.A.C.) as fumes or mist is 1 p.p.m.(10) Contact of the skin with the liquid should be minimized and ingestion should be avoided.

5.3 Extent of hazard

In the Purex Plant, a maximum of 25 gal. of 93% sulfuric acid is used daily for regeneration of the water-demineralizer units. The hazard is considered small because of the small quantities involved and its limited contact with personnel.

5.4 Precautions

As previously indicated, protective clothing designed to prevent contact of the chemical with the skin must be worn when handling sulfuric acid. Standard chemical-plant design practice was followed in installation of the sulfuric acid handling facilities. Deluge-type safety showers

and hose bibs are provided at strategic locations in operating areas to provide for rapid washing of surface exposures.

6. Sodium Hydroxide

Sodium hydroxide is a chemical widely used in industry. Proper protective equipment, such as gloves, clothing, and goggles should be worn when handling sodium hydroxide.

6.1 Physiological effects

Sodium hydroxide is a dangerous alkali, as either the solid or liquid form quickly attacks the skin and eyes. Severe burns (dehydration of skin tissue) producing deep-seated, slowly healing ulcers and/or loss of fingernails may result from chemical reaction of sodium hydroxide with the skin. There appears to be an inactive period between the time of contact with caustic and the appearance of the actual burn. No time should be lost in washing the part with water, since the inactive period probably does not exceed a few minutes. The skin should be washed with 2% acetic acid to neutralize the residual caustic and then with water. If the caustic is splashed in the eyes, they should be washed with 5% boric acid solutions.

Sodium hydroxide when dispersed as a dust or mist of concentrated solutions, is intensely irritating to the upper respiratory organs. Ulceration of the nasal passages may result from long or severe exposure to such conditions. Swallowing caustic solutions is considered deadly. If sodium hydroxide has been swallowed, the patient should be given 2% acetic acid, up to 6 fluid ounces, followed by egg whites and milk. The patient should be kept quiet and warm.

6.2 Tolerance concentrations

While no limits are specified in the literature for exposure, contact with the chemical as a liquid or as a mist should be avoided as much as possible. About 2 grams (30 grains) of NaOH taken internally may be sufficient to cause death.(2)

6.3 Extent of hazard

The daily process consumption of 50% sodium hydroxide is approximately 800 gallons when the plant is processing 10 tons of uranium per day. This entire amount is required for coating removal and for neutralization of the combined process wastes. The hazard is thus localized to the tank farm and the parts of the process noted above.

6.4 Precautions

Equipment for handling sodium hydroxide solutions has been designed in accordance with normal chemical-plant practice. As previously indicated, the proper protective clothing should be worn by operating personnel and the safety showers provided should be kept operative and accessible.

7. Uranium, Plutonium, and Radioactive Fission Products

Uranium, plutonium, and radioactive fission products represent a serious health hazard. The principal physiological effects of these substances is due to their radioactivity. The hazards involved in their handling are discussed in Chapter XIX.

8. Other Process Chemicals

The other process chemicals, sodium carbonate, sodium nitrate, sodium nitrite, sodium sulfate, sulfamic acid, and iron powder, are not hazardous enough to warrant a detailed discussion. Reasonable care should be exercised, however, in handling them to avoid skin contact and to assure that ingestion does not occur.

REFERENCES

(1) Beatty, Berger, and Shrenk, Determination of the Oxides of Nitrogen by the Phenoldisulfonic Acid Method, U. S. Bureau of Mines R.I. 3687, (1943).

(2) Brookes and Alyea, Poisons, D. Van Nostrand, Pp. 37, 94-95, (1946).

(3) Elkins, Chemistry of Industrial Toxicology, John Wiley and Sons, Pp. 84, 96-99, 225, (1950).

(4) Hamilton and Hardy, Industrial Toxicology, Paul B. Hoeber, P. 37, (1949).

(5) Henderson and Haggard, Noxious Gases, Rheinhold Publishing Corporation, P. 137, (1943).

(6) Jacobs, Analytical Chemistry of Industrial Poisons, Hazards, and Solvents, Interscience Publishers, Inc., P. 280, (1941).

(7) Merck and Co., Inc., The Merck Index of Chemicals and Drugs, P. 968, (1952).

(8) Moulton, National Fire Codes, Vol. I, National Fire Protection Association, Pp. 10, 519, (1948).

(9) Patty, Industrial Hygiene and Toxicology, Vol. II, Interscience Publishers, Inc., Pp. 610, 742-744, (1949).

(10) Sax, Handbook of Dangerous Materials, Rheinhold Publishing Corporation, Pp. 199, 271-272, 277, 363-364, 385, (1951).

(11) Anon., National Electrical Code, Vol. V, National Fire Protection Association, (1947).

(12) Anon., National Safety News, Vol. LXVIII, National Safety Council, (1953).

(13) DP-25 TNX Evaporator Incident, Interim Technical Report. T. J. Colven, Jr., G. M. Nichols, T. H. Siddall. 5-15-53

(14) HW-19065 Comparison of Diluents for Tributyl Phosphate. L. L. Burger. 10-6-50.

(15) HW-19140 Uranium Recovery Technical Manual. Author not stated. 11-10-51.

(16) KAPL-858 Report of the Chemistry and Chemical Engineering Section for Nov., Dec., 1952 and Jan., 1953. Author not stated. 3-24-53.

(17) Purex Facility -- Inner Area Services Design Criteria (Electrical) -- Item XXVI-4. J. B. Fecht and H. A. Broderson. H.A.P.O. 12-29-52.

PART V: SAFETY, continued

CHAPTER XXIII. CRITICAL MASS CONTROL

CONTENTS

	Page
A. INTRODUCTION	2302
B. CRITICAL MASS FOR SLOW-NEUTRON FISSION	2302
1. Minimum Critical Mass	2303
2. Effect of Geometry	2303
3. Effect of Other Chemical Elements	2304
4. Effect of Pu Concentration	2304
5. Effect of Surrounding Materials	2305
C. METHODS OF CRITICAL MASS CONTROL	2306
D. CRITICAL MASS CONTROL IN THE PUREX PLANT	2306
1. General	2306
2. Geometrically Safe Equipment	2308
3. IB Extraction and IB Scrub Columns and 2AF Tank	2309
4. Sumps	2311
5. Rework Effects	2311
6. Reflux Flowsheet Considerations	2311
E. CONSEQUENCES OF EXCEEDING THE CRITICAL MASS	2312
REFERENCES	2312

CHAPTER XXIII. CRITICAL MASS CONTROL

The main plutonium isotope, Pu-239, and the uranium isotope U-235 are both capable of self-sustained nuclear-fission reactions. Although both of these nuclides are handled in the Purex process, a chain reaction of U-235, which is invariably associated with neutron-absorbing U-238, is impossible under the conditions of the Purex process. This chapter, therefore, deals only with Pu-239 critical mass control.

A. INTRODUCTION

Pu-239 is capable of both slow-neutron and fast-neutron chain reactions. Slow-neutron chain reactions result when the neutrons released by the fission of a Pu-239 nucleus are moderated to lower energy levels by collisions with other kinds of atoms before capture by other Pu-239 nuclei, which in turn fission and continue the reaction. Fast-neutron chain reactions are basically the same, except that free neutrons undergo essentially no moderation with other atoms and thus lose no energy before capture. A certain quantity of plutonium must be present under a given set of conditions before a fission reaction can become self-sustaining. This quantity is called the critical mass. Since the fission capture cross-section is smaller for fast neutrons than for slow neutrons, a larger weight of Pu-239 is required to produce fast neutron criticality. Under certain conditions as little as 0.6 kilogram of plutonium may undergo slow-neutron chain reaction, while a fast-neutron reaction requires at least 5 kilograms. Typical fast-neutron reaction conditions -- plutonium concentrations above 5000 g./l. and H:Pu atomic ratios below 5 -- are entirely foreign to the Purex process, although less extreme conditions suffice for significant contribution to slow-neutron reactions by neutrons of higher energy. The specific concern with critical mass in the Purex Plant is generally the prevention of slow-neutron reactions of plutonium, with the potential contribution of higher-energy neutrons being of concern only in exceptional cases, as noted later in the chapter. This chapter presents the technical and experimental background of the critical mass problem as well as the design features and operational safeguards employed to preclude a critical accumulation of Pu-239 in the Purex Plant. It will be evident from the following sections that special critical mass control measures are required only in connection with equipment containing plutonium after it has been separated from uranium.

B. CRITICAL MASS FOR SLOW-NEUTRON FISSION

The amount of plutonium required to reach criticality is dependent on a number of factors which affect either moderation (slowing down) of fast neutrons or the possibility of neutron capture by the Pu-239 present. The principal factors include: (a) the relative abundance of the various plutonium isotopes, (b) the concentration of the plutonium, (c) the nature and concentration of other chemical elements present, (d) the geometry of the assembly, and (e) the nature of surrounding materials.

1. Minimum Critical Mass

The smallest conceivable volume for a self-sustained Pu-239 chain reaction would be with solid Pu-239, which would undergo fast-neutron reaction. However, the smallest conceivable weight of plutonium which could sustain a reaction would occur with the plutonium moderated for a slow-neutron reaction. Such minimum conceivable critical mass under basic conditions of the Purex Plant occurs when the plutonium is uniformly distributed in an approximately 12-in.-diameter sphere, moderated and surrounded by water. The value of the "minimum critical mass" varies slightly with the total pile exposure that the parent slugs have received, because of the increased concentrations of Pu-240 formed with increased pile exposure. Pu-240 has a poisoning effect and inhibits the criticality of Pu-239.

The minimum critical mass for pure Pu-239 in water (which has significance as a limiting case for plutonium produced at 0 megawatt-day/ton pile exposure) has been calculated as 509 grams, and occurs at a plutonium concentration of about 32.6 g./l. in a 12.2-inch-diameter sphere. (This hypothetical value is derived from measured critical masses by applying appropriate corrections for foreign ions and solid walls of finite thickness necessarily present in experimental determinations.) The minimum critical mass values for water-moderated plutonium produced in slugs with various total pile exposure levels are shown on Figure XXIII-1 and are summarized below.

Total Exposure Received by Parent Slugs, Megawatt-Days/Ton of U	Corresponding Plutonium Concentration, G. Pu/Ton U	Minimum Critical Mass, G. Pu
100	100	529
215	200	548
420	374	595
600	514	632
900	712	680

2. Effect of Geometry

The effect of sphere or cylinder diameters on the critical mass is shown in Figures XXIII-1 and XXIII-2. These curves are for completely "water-tamped" spheres and cylinders (i.e., curves for cases where a large percentage of the neutrons which escape from the vessel are reflected back to the plutonium mass). The critical mass is higher for air-tamped (air-surrounded) spheres or cylinders, since few of the escaping neutrons are reflected back to the plutonium mass. It may be noted on Figures XXIII-1 and XXIII-2 that the critical mass of plutonium is highly dependent on the geometry of the containing vessel as well as on the plutonium concentration. In fact, a plutonium concentration above a certain critical value is required to support a chain reaction in a cylinder of any given diameter, even when the cylinder is infinitely long. Figure XXIII-3 shows the effect of diameter on the critical concentration of infinitely long, water-tamped and air-tamped cylinders for plutonium produced at various irradiation levels. Extrapolation of these curves to infinite critical concentration can be made to find the maximum diameter of an "always safe" infinitely long cylinder, in which slow-neutron criticality is impossible.

[redacted]

For 215 megawatt-day/ton U plutonium (200 g. Pu/ton U), safe cylinder inside diameters for plutonium solutions are 7.6 and 5.4 inches for air-tamped and water-tamped cylinders, respectively. As the irradiation level of the plutonium increases the maximum safe diameters increase because of the poison effect of the increased Pu-240 concentration. As is indicated on Figure XXIII-3, when 400 megawatt-day/ton plutonium is processed, the maximum safe inside diameters are 7.8 and 5.6 inches for air-tamped and water-tamped cylinders, respectively.

As indicated on Figure XXIII-4, the "always safe" plutonium solution thickness for 215 megawatt-day/ton plutonium in an air-tamped, infinitely long and wide, slab-shaped container with zero wall thickness is approximately 4.6 inches. For a water-moderated slab the "always safe" slab thickness is reduced to approximately 1.9 inches.

3. Effect of Other Elements

The introduction of chemical ions into a plutonium solution generally increases the critical mass. This increase is caused by the combined effects of the substitution of non-moderating foreign ions for some of the water moderator thus causing more neutrons to escape from the vessel and the substitution of foreign ions with neutron absorption cross-sections higher than that of water. Since the foreign ion absorbs the slow neutrons and moderates less fast neutrons, the critical mass must be increased to provide more neutrons to counterbalance the increased loss of neutrons due to absorption and leakage. On Figure XXIII-1 this effect is illustrated for nitrate ion, which is present in most Purex-process solutions. As is indicated by Figure XXIII-1, the critical mass for 420 megawatt-day/ton plutonium (374 g. Pu/ton U) increases from 595 grams with no nitrate ions present to 754 grams when the solution contains 212 g. of nitrate ion per liter. For 200 megawatt-day/ton plutonium an increase in the nitrate ion concentration from 0 to 212 g./l. increases the calculated critical mass from 550 to 710 g. Pu.

The uranium isotope U-238 also inhibits plutonium criticality, rendering a chain reaction impossible in a solution containing the uranium isotopes (notably U-238 and U-235) and plutonium in approximately the proportions in which they are present in the pile-irradiated slugs.

4. Effect of Plutonium Concentration

The critical mass as a function of plutonium concentration passes through a minimum at an optimum plutonium concentration, as shown in Figure XXIII-1. The minimum critical mass for solutions containing plutonium from 200 g./ton levels (0 NO_3^-) occurs at approximately 33 g. Pu/l.

Figure XXIII-2 illustrates the variation of critical mass with plutonium concentration in water-tamped finite cylinders of various diameters.

Figure XXIII-3 indicates the critical concentration in various infinitely long air-tamped and water-tamped cylinders. The critical concentration for these infinite cylinders falls rapidly towards an asymptotic value as the diameter increases. For plutonium made at a 200 g./ton level the asymptotic value is about 7.8 grams of plutonium per liter. For concentrations below this value, the solution is "always safe", i.e., safe from chain reaction in any vessel, regardless of its size and shape.

5. Effect of Surrounding Materials

The effects of surroundings on critical slab and cylinder geometry were briefly discussed in Subsection B2 above. The following effects were noted when the critical shape containing 215 megawatt-day/ton Pu solution was surrounded with air and with water:

Geometric Shape (1/4-In.-Thick Stainless-Steel Walls)	Air "Tamped"	Water "Tamped"
Maximum "always safe" infinitely long cylinder inside diameter, in.	7.6	5.4
Minimum "always safe" infinite slab solution depth, in.	4.0	1.9

As indicated in the above table, surrounding a vessel with water instead of air significantly affects the "always safe" dimensions. In those portions of the Purex Plant where safe geometry has been employed, it has been assumed that the vessels will be essentially "air tamped". However, in the plant it is generally impossible to design an equipment piece which is completely surrounded by air. In plant design, therefore, the effects introduced by the surroundings must be considered and suitable allowances made in the geometry of the "always safe" vessel. Among the effects which must be considered are the following:

(a) The thickness and type of container walls. The adverse effects of increasing stainless-steel wall thickness on "always safe" slab and cylinder dimensions are indicated on Figure XXIII-4.

(b) The presence of nearby objects which can moderate and/or reflect neutrons to the "always safe" vessel. In this category would fall the various appendages (e.g., auxiliary instrument lines and support dunnage) to the vessel and confining cell walls.

(c) The presence of nearby (or connecting) vessels which contain neutron sources. When neutron sources are two feet or more away from a vessel, "interaction" effects are generally negligible.

In the design of the Purex 2A and 2B Columns, the maximum "always safe" 4-in. slab thickness and 7.6-in. cylinder diameter are reduced to 3 in. and 7.0 in., respectively, to allow a suitable margin of safety for the effects of surroundings.

C. METHODS OF CRITICAL MASS CONTROL

Accumulation of a critical mass of plutonium in any process solution may be prevented by the use of any of three basic approaches: (a) safe solution control, (b) safe geometries, and (c) safe batches.

The method of safe solutions involves processing solutions of such composition that they cannot become critical under any possible process condition. Criticality is impossible in "safe solution" because of the absorption of free neutrons by other elements in the solution. A solution cannot be considered safe without additional safeguards if any condition for the separate precipitation of the plutonium is possible.

A plutonium solution too dilute to support a chain reaction may be considered a safe solution without additional safeguards only when conditions leading to precipitation of the plutonium cannot arise.

The method of safe geometries involves handling the plutonium in isolated equipment of such size and shape that enough free neutrons escape for criticality to be impossible in any contingency that may be expected. The solvent-extraction columns in the Purex Plant which are geometrically safe are usually referred to as safe columns. The diameter of such columns is dependent upon the supports or reflectors around them. These columns, designed against a slow-neutron reaction, are known to be "critically safe" only for concentrations up to 500 g./l. No experimental evidence is available that would give assurance that a chain reaction could not arise above that concentration under some conditions, due to fast-neutron fission. In any case, the plutonium content of the column would have to exceed a fast-neutron critical mass (over 5 kg.) to make a chain reaction possible.

The method of safe batches involves handling the plutonium in isolated batches which contain less plutonium than the minimum amount which will become critical under the most unfavorable conditions expected.

D. CRITICAL MASS CONTROL IN THE PUREX PLANT

1. General

In the Purex Plant all three of the above-mentioned methods of critical mass control are employed. In the initial processing steps of the Purex Plant -- from the dissolvers through the Co-Decontamination Cycle and the IA Column -- critical mass control is achieved by the

principle of safe solution. In these process equipment pieces the plutonium and uranium are present in the same ratio as they were originally in the irradiated natural-uranium slug and criticality is not possible because of the neutron-absorption properties of the large amount of uranium-238 present. By selective precipitation of plutonium in the head-end vessels it would perhaps be possible to accumulate a critical mass. However, the chemical conditions required to permit selective precipitation are difficult to create (not believed possible with chemicals available in the plant), and the possibility of accumulation of a critical mass in these vessels is, accordingly, extremely remote.

In connection with the IB Extraction and IB Scrub Columns and the 2AF Tank, control methods based on combinations of safe-solution and safe-batch principles are employed (with additional partial employment of the safe-geometry principle in the IB Scrub Column), as discussed under D3, below.

In the Final Plutonium Decontamination Cycle and the plutonium product concentration and sampling facilities, vessels of safe geometry are used. In these facilities, critically safe slabs and cylinders are used either alone or in safe combinations. In the design of the various equipment pieces, consideration was given to the interaction and reflection effects for each specific equipment installation and suitable allowances were made in the dimensions of the "critical" vessels to provide a safe integrated unit. These safe-geometry vessels are critically safe even if plutonium precipitates were to accumulate in them.

Batch limitations are employed in metering out of the plutonium product solution into PR cans, even though batching is not required from a critical mass control standpoint at the Purex Plant since both the Sampler Tank and the PR cans are designed with critically safe geometry. Batching is employed for accountability reasons and to provide critically safe batches suitable for handling in subsequent processing facilities.

In determining the critical mass control methods to be employed, as well as in the design of the various "critically safe" vessels, the following basic assumptions have been made:

(a) The feed materials to be processed in the Plant will be irradiated natural-uranium slugs. For irradiated natural uranium in which the plutonium content is less than 1,800 grams per ton of uranium, the resulting solutions are safe because of the neutron absorption by the U-238.

(b) The natural uranium slugs processed will be irradiated in the piles to a level of at least 200 megawatt-days/ton U.* In the design of the geometrically safe vessels this irradiation level has been assumed in specifying critical vessel dimensions. At higher irradiation levels the Pu-240 content of the plutonium is increased. Since it acts as a poison the geometrically safe vessels would contain a greater factor of safety for processing higher irradiation-level slugs.

2. Geometrically Safe Equipment

As was indicated above, from the 2A Column through the rest of the plutonium processing equipment in the Plant, safe geometry is employed. Included in this equipment are: the 2A and 2B Columns, the Plutonium Stripper, the No. 1 and No. 2 Plutonium Concentrators and Condensers, the Plutonium Receiver, the Plutonium Samplers, the Vacuum Tank, and the PR cans. The design of the 2A and 2B Columns is indicated in Chapter XII, while that of the concentration and sampling equipment is described in Chapter XIII.

In the design of the geometrically safe equipment, cylinders and slabs approaching maximum safe dimensions have been interconnected. In the case of the 2A and 2B Columns, for example, the packed (plate) section of the column is a 7-in. I.D. cylinder while the phase disengaging spaces at the top and bottom of the columns are 4-in.-thick slabs (3-in. inside height). To aid in the development of the design of these columns and the other critically safe vessels, the following specifications have been adopted:

(a) "Safe columns" are limited to a maximum internal diameter of 7 inches and "safe slabs" to a maximum inside thickness of 3 inches. These dimensions are sufficiently smaller than the actual critical diameters and thicknesses for air-tamped assemblies (discussed in Section B) to allow for a reasonable extent of reflection and interaction effects with surrounding vessels, concrete, and structural members and thereby to permit reasonable flexibility in design.

(b) The maximum size right-angle tee employed in an air-tamped critical assembly is limited to 5-in. pipe.

(c) A 7-in. I.D. critical cylinder should neck down to 5 in. or less for a distance of at least two feet before a sharp bend or miter joint.

(d) A critical 3-in.-thick slab should neck down to a width of 12 in. before transition (i.e., conversion for attachment to a 5-in. pipe).

- -

*) For comparison, 215 megawatt-days/ton is the lowest anticipated irradiation level for slugs to be processed in the Purex Plant.

(e) In general, pipes should not connect to the large flat faces of critically safe slabs but should enter on the 3-in.-high sides. Such pipes should extend 2 feet from the slab before running perpendicular to the large flat faces of the slab. For the 3-in. slabs used in the 2A and 2B Columns, calculations indicate that half-inch pipes may enter directly into the slab as long as they are two feet apart.

(f) In general, pipes should not enter directly into the 7-in. I.D. cylinders. However, for the 2A and 2B Columns calculations have indicated that the construction used for the "doughnut-type" distribution introduces no intolerable effects as long as the 2-in. I.P.S. "doughnut" is at least 6 in. from the outside shell of the cylinder. From the "doughnut" three equally spaced 1/2-in. pipes lead into the cylinder proper.

(g) Geometrically safe assemblies should be placed at least two feet from other vessels containing plutonium.

(h) The method of supporting a safe assembly is important. The effects of supports and the surroundings must be considered.

3. IB Extraction and IB Scrub Columns and 2AF Tank

The IB Extraction Column, the IB Scrub Column, and the 2AF Tank rely primarily on safe solutions for critical mass control. During normal or near-normal operation, the plutonium concentration in these process vessels (0.2 to 0.6 g./l.) is far below the maximum safe concentration of 8 g. Pu/l.

In the 27-in.-diameter IB Extraction Column, the following safeguards are available in addition to dilution:

(a) In most of the IBX Column, uranium is present in appreciable concentrations along with the plutonium.

(b) The estimated plutonium holdup in the IB Extraction Column during normal steady-state operation is 150 to 350 grams, i.e., well under the 509 g. minimum critical mass, and it is even less during start-up and shutdown.

During periods of abnormal operation it would be possible to accumulate plutonium in the IB Extraction Column. For example, if the IBX and the aqueous effluent streams were shut off and the organic feed were introduced to the column, plutonium would strip into the aqueous phase. Under such conditions, the plutonium would build up until all the iron reducing agent is oxidized. At HW #3 Flowsheet conditions, the limiting aqueous plutonium concentration would then be approximately 7 g./l., slightly less than the 8-g./l. minimum critical concentration. The presence of uranium in both the continuous, aqueous and the dispersed, organic phases provides an additional margin of safety.

The 8-in.-diameter IB Scrub Column is safe against a slow-neutron reaction by virtue of its geometry for any plutonium concentration up to at least 85 grams per liter, i.e., approximately 150-fold the normal flowsheet concentration of plutonium in the IB Scrub Column (at 600 megawatt-days/ton; 400 times the flowsheet concentration at 215 MWD/T). Consideration of any possible off-standard operating conditions which could result in such a drastic accumulation of plutonium in the IB Scrub Column leads to the conclusion that such an occurrence is extremely unlikely and would be detected long before the potentially unsafe concentrations of over 85 grams per liter are approached.

The occurrence of a nuclear chain reaction with the minimum potential critical mass of plutonium for the 8-in. IBS Column (2.8 kg.) would require the accidental co-occurrence of the following events, each extremely unlikely in itself:

(a) Undetected holdup of at least 13 hours' plutonium production within the column (13 hr. based on 10 tons U/day, 600 megawatt-days/ton; more for lower irradiation levels).

(b) Even distribution of all the plutonium in the column (presumably in precipitate form) in a 22-in.-long, 8-in.-diameter section, with none of this plutonium precipitate falling into the "always safe" slab bottom disengaging section.

(c) No substantial plugging of the sieve plates in the column by the plutonium precipitate (since flooding of the column as a result of such plugging would disrupt the flow of plutonium-bearing solution to the column).

In the 26-in.-diameter 2AF Tank as in the two contactors discussed above, primary critical mass control is achieved by the Pu concentration being well below the critical concentration of 8 grams per liter. The 2AF Tank is safe also during normal operation since the plutonium holdup (estimated 200 to 400 g.) is less than the minimum critical mass. The tank could be made unsafe if process conditions existed which would permit the formation and accumulation of plutonium precipitate in the tank. However, such conditions are considered extremely unlikely. To produce such conditions the following events must occur simultaneously:

(a) Caustic or some other plutonium precipitating reagent must find its way into the tank. Sodium nitrite and nitric acid are the only reagents continuously fed to the tank from gallery headers. If caustic were inadvertently run in the nitric acid header, operating difficulties would be encountered in other portions of the Plant (e.g., precipitates formed in A-type columns) serviced by the header. Such difficulties would shut down the Plant before a critical mass could build up in the 2AF Tank. The normal $NaNO_2$ solution flow to the 2AF Tank is so small that insufficient caustic would be added to the tank to cause precipitation if $NaNO_2$ were inadvertently replaced by caustic in the $NaNO_2$ header.

(b) Both agitators in the 2AF Tank must be off. If these agitators are on, precipitate would be carried out of the tank and into the 2A Column as it is formed. The agitator electrical circuits are connected to an alarm system which indicates agitator failure.

4. Sumps

In case of rupture of an equipment piece containing concentrated plutonium solution, the solution is collected in the cell sump. In the design of L Cell (containing the final Pu decontamination, and concentration equipment) and the PR Room sumps, "critically safe" slab construction has been employed. The sumps have been so designed that the contents of all vessels in the cell may be dumped in the sump without exceeding the critical plutonium accumulation of 0.25 g./sq.cm. of floor space. To determine the presence of slight leaks and a possible accumulation of Pu solution, the L Cell sump weight-factor dip tubes have been connected to alarm lights on the operating panel boards.

5. Rework Effects

During periods of non-standard operation of the Purex Plant, it will occasionally become necessary to rework waste and product solution containing significant amounts of plutonium. To rework non-standard plutonium-bearing waste or product batches, the solution is routed back to the head end (the Dissolver, the HAF Make-Up Tank, or the Centrifuge Feed Tank depending upon the nature of the solution) of the process where it is combined with dissolver solution (or HAF). Special operating precautions must be taken when batches are reworked to prevent enriching the dissolver solution enough to produce critical mass difficulties. As was previously indicated, the vessels at the head end of the process are safe primarily because the plutonium content of the irradiated natural uranium is less than 1,800 g./ton. Therefore, for each ton of irradiated natural uranium present in solution in the HAF Tank or the Centrifuge Feed Tank, the plutonium added by the rework solution must not result in the presence of more than 1,800 g. of plutonium per ton of uranium, with 1,200 g./ton constituting a desirably safe working limit.

6. Reflux Flowsheet Considerations

Operation of the Purex Plant at reflux flowsheet conditions, i.e., with the 2A and 2B Columns operated at chemical conditions which cause plutonium to reflux and build up within the 2A-2B Column battery to concentrations of 50 to 75 g. Pu/l., would make certain equipment and procedure changes necessary for critical mass control.

E. CONSEQUENCES OF EXCEEDING THE CRITICAL MASS

The possibility of accumulating a plutonium critical mass in the Purex Plant is extremely remote. It could occur only as the result of a number of simultaneous abnormal events, each extremely unlikely in itself. If a critical mass is accidently accumulated in any process vessel, the outcome will depend largely upon the rate at which the supercritical conditions are attained. The possibilities range all the way from (a) simmering at a temperature slightly above that of the room, through (b) slow boiling, and (c) boiling at a pressure high enough to eject plutonium solution through the vent system to the atmosphere, to (d) a steam explosion with a temperature of at most 5000°C. Cases (c) and (d) are considered extremely unlikely. The most extreme conditions believed at all likely if the critical mass is exceeded are: (a) development of about two atmospheres of absolute pressure for less than 1/10 of a second in the process vessel and (b) radiation sufficient to give a man located behind 1-1/2 feet of concrete shielding a dosage of 70 roentgens of gamma radiation.

REFERENCES

(1) HW-18700 Redox Technical Manual. Author not stated. 7/10/51. Pp. 2501-2508.

(2) HW-18791 Summary of P-11 Results. P.F. Gast. 9/11/50.

(3) HW-23487 The Isotopic Content and Specific Activity of Pile Produced Plutonium. G.J. Alkire, H.R. Schmidt, and E. M. Kinderman. 2/25/52.

(4) HW-24514 Critical Mass Studies of Plutonium Solutions. F.E. Kruesi, J.O. Erkman, and D.D. Lanning. 5/19/52.

(5) HW-25374 Critical Mass Studies of 231 Process Tanks. D.D. Lanning. 8/19/52.

(6) HW-27575 Critical Mass Information Applied to Purex and Recuplex Design. D.D. Lanning. 4/1/53.

(7) HW-30109 Revised Specifications for Purex Plant IB Scrub, 2A, and 2B Columns. R.E. Smith. 12/1/53.

(8) K-375 Radiation Dosage from Chain Reactions. M.C. Edlund and S. Visner. 3/23/49.

(9) K-643 Critical Mass Studies, Part V. D. Callihan. 6/30/50.

FIGURE XXIII-1

CRITICAL MASS OF PLUTONIUM IN SPHERES AS FUNCTION OF DIAMETER, NITRATE CONCENTRATION, AND PILE EXPOSURE

FOR SPHERES WITH 0.05-IN.-THICK STAINLESS-STEEL WALLS COMPLETELY SURROUNDED BY WATER.

BASED ON DATA FROM HW-24514.

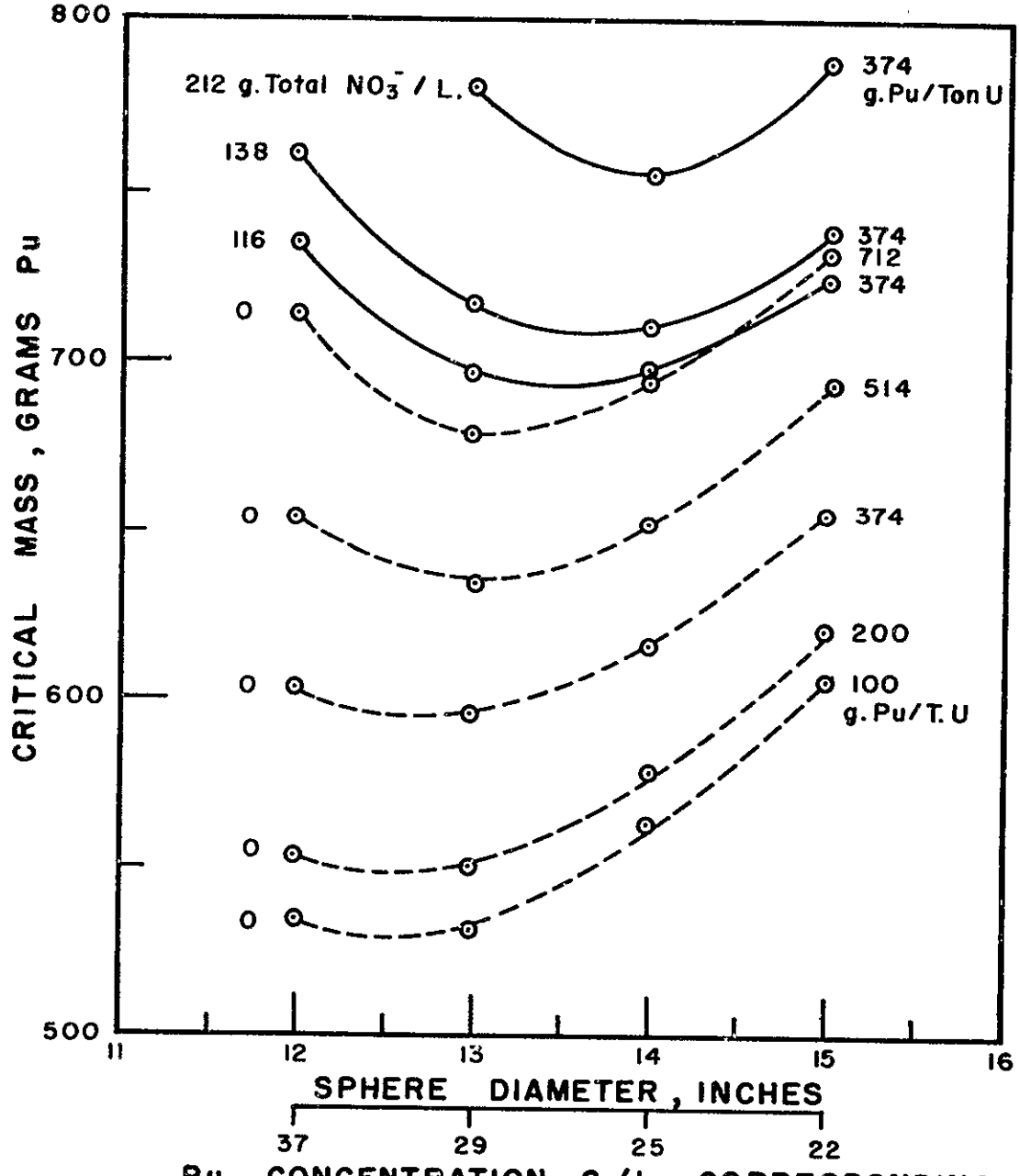

Pu CONCENTRATION, G./L., CORRESPONDING TO 0 G./L. NO_3^-, 200 G./T. CURVE

[redacted]

FIGURE XXIII-2

CRITICAL MASS OF PLUTONIUM IN CYLINDERS AS FUNCTION OF DIAMETER AND CONCENTRATION

FOR CYLINDERS WITH 0.062-IN.-THICK STAINLESS-STEEL WALLS COMPLETELY SURROUNDED BY WATER.

384 MWD/T (344 g. Pu/TON U).

2.0 M NO_3^-

DATA FROM HW-24514.

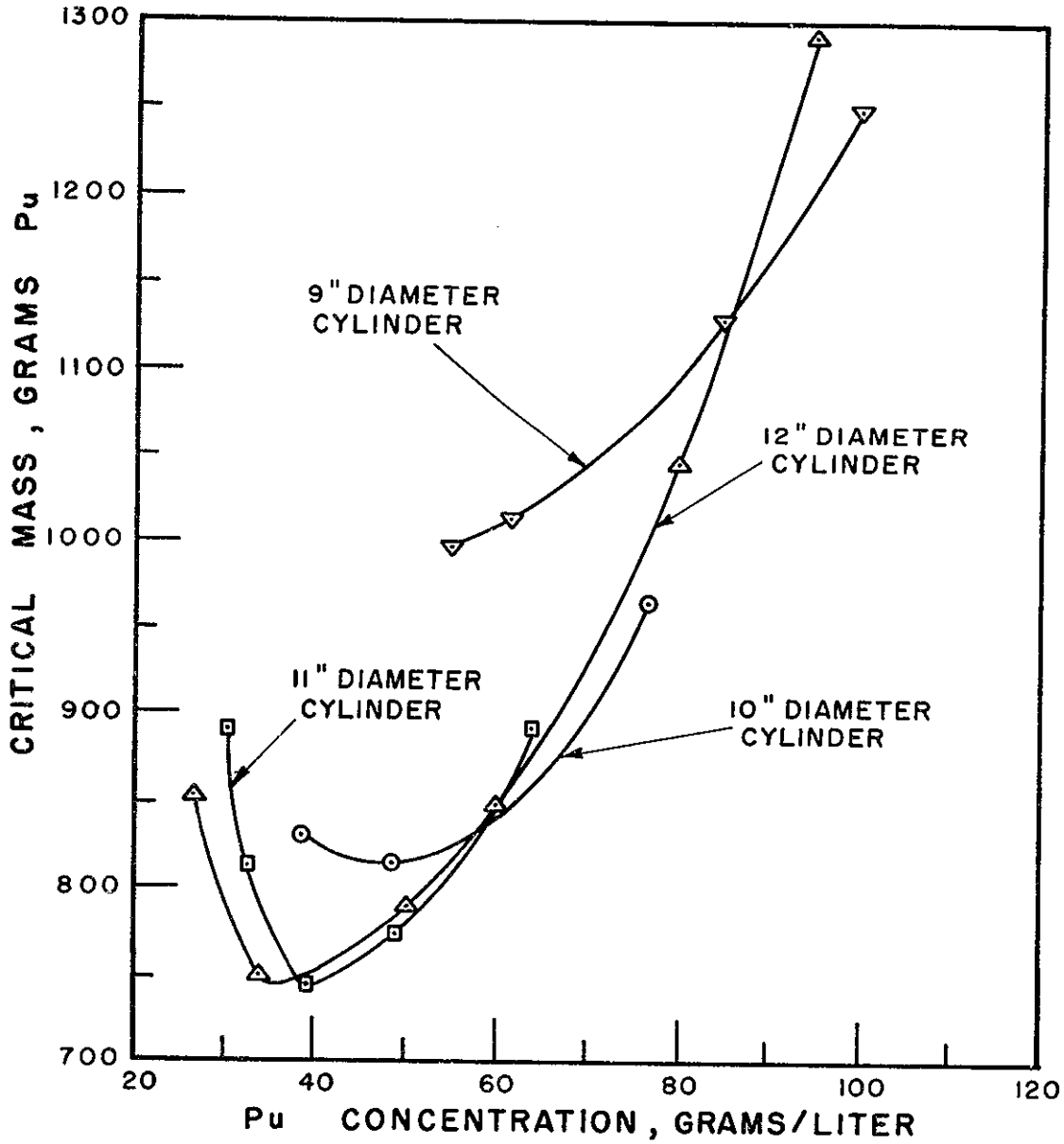

[redacted]

FIGURE XXIII-3

CRITICAL CONCENTRATION OF PLUTONIUM IN INFINITELY LONG CYLINDERS

NO_3^- ABSENT.

BASED ON DATA FROM HW-27575.

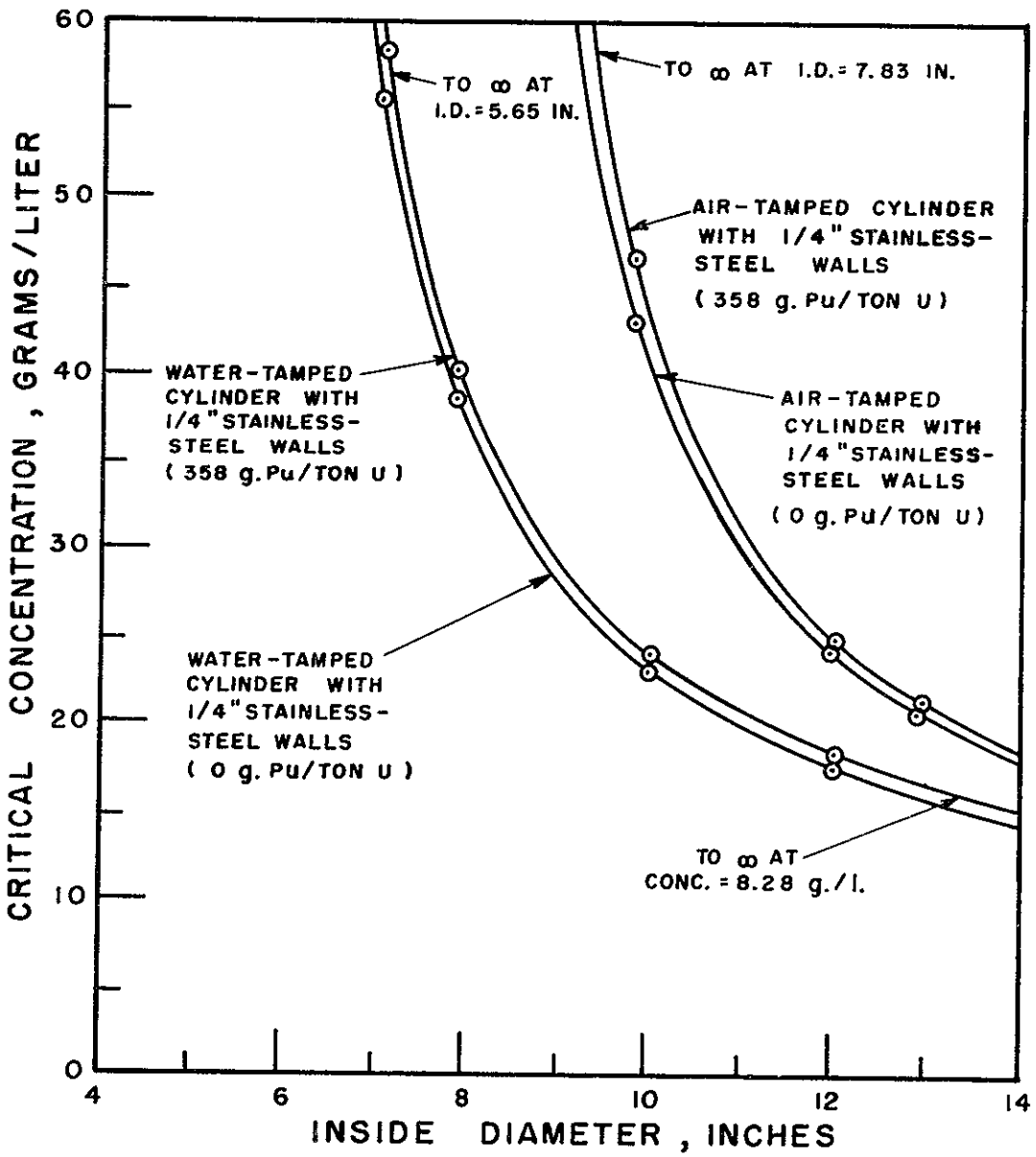

FIGURE XXIII-4

EFFECT OF WALL THICKNESS ON CRITICAL SIZE

STAINLESS-STEEL WALLS.

NO_3^- ABSENT.

BASED ON DATA FROM HW-27575.

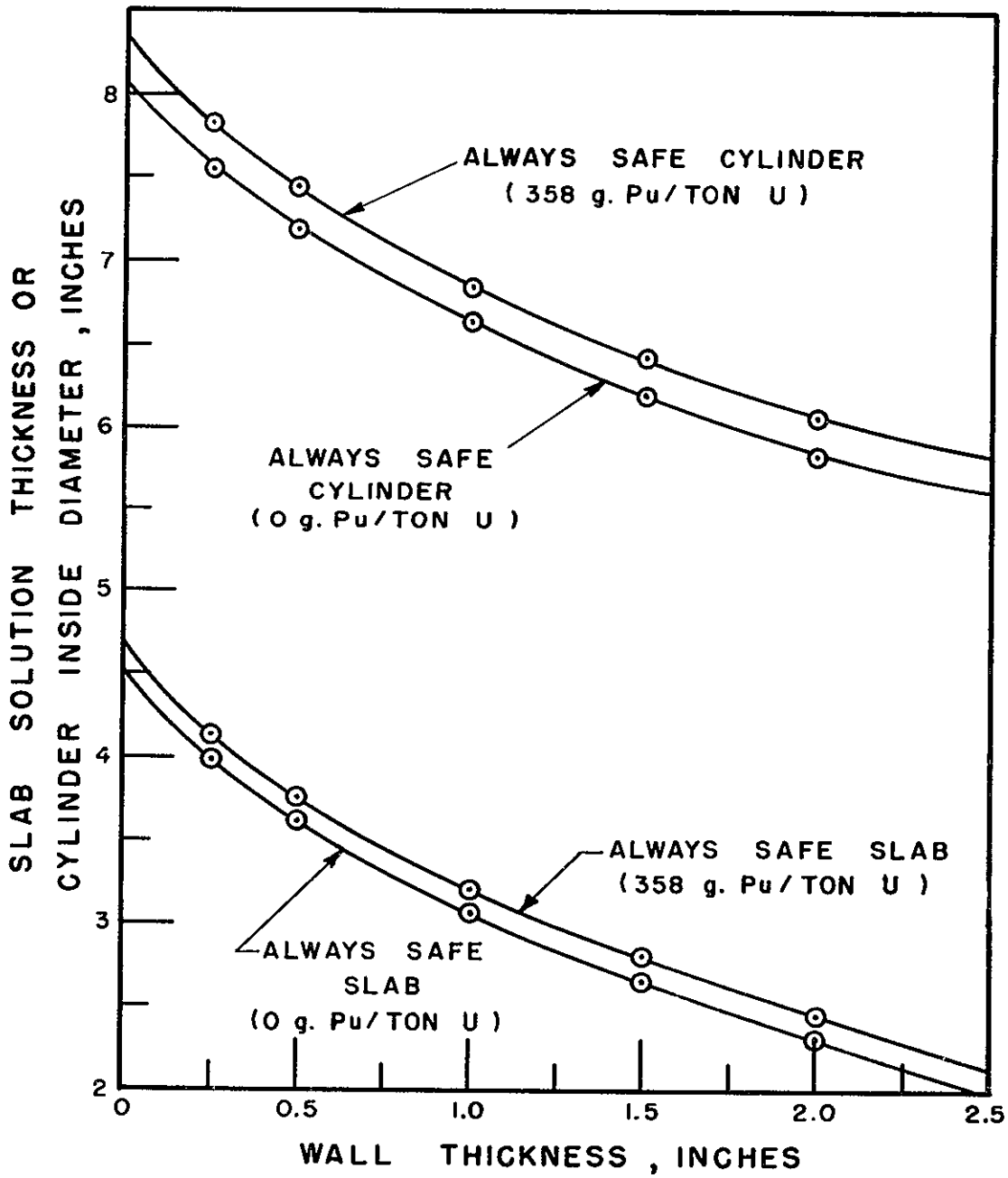

INDEX

A-TYPE COLUMNS - see Column HA, Column IA, Column 2D, and Columns, A-type
A-type sampler, 1803-5
Absorber - see Acid Absorber
Absorption coefficient, 2005, 2006, 2010, 2011
Acid Absorber, T-F5 (also see Acid recovery)
  chloride removal, 1011
  corrosion, 1609
  description, 1008-9, 1315-16
  operating diagram, 1009-11
  operation, 1038-39
Acid absorption - see Acid Absorber and Acid recovery
Acid concentration - see Acid recovery and Acid Concentrators, E-F6 and E-F11-1
Acid Concentrator Condenser, E-F11-2, 1006, 1314, 1315
Acid Concentrators, E-F6 and E-F11-1 (also see Acid recovery)
  description, 1006, 1313-14
  heat loads, 1007
  operating safeguards, 1007
  de-entrainment, 1008
  operation, 1036-38
  ruthenium volatilization, 1008
Acid fractionation - see Vacuum Fractionator, T-U6
Acid Fractionator - see Vacuum Fractionator, T-U6
Acid recovery (also see Acid recovery and waste disposal), 114-15, 1002, 1005-14, 1035-44)
  absorption, 1009-11
  alternate process flow diagram, 1006
  concentration, 1006-8
  fractionation, 1011-13
  instruments, 1007, 1725
  off-standard conditions, detection and remedies, 1040-41
  operating safeguards, 1007
  procedures, 1035-40
  process description, 1005-14
  process equipment, 1005, 1006-7, 1008-9, 1011, 1014, 1313-16
Acid recovery (cont.)
  process flow diagram, 1006
  recycle, 1013-14
  recycle procedure, 1040
  rework, 1014
Acid recovery and waste disposal, 114-15, 1001-49
  economic advantage to Purex process, 1002
  flowsheet, 115
Acid Storage Vault, 1120
Agitators, 1412
Air Tunnel, 1105
Alpha particles, 1902, 2003
  attenuation, 2013
  initial intensity, 2006
  intensity calculations, 2019
Alpha-Simpson-Proportional (ASP) Counter, 1811-12
Alternative flow schemes
  backcycling of No. 2 Acid concentrator bottoms, 609
  bypassing of decontamination cycles, 609
  reflux plutonium decontamination cycle, 114, 426, 610
Amercoat 33, 1613-15
Amercoat 55, 1613-15
Amercoat 74, 1614-15
Amercoat 1574 - see Amercoat 74
Americium
  analytical determination, 1810
  distribution ratio, 481
  extraction in HA Column, 417
Ammonia scrubbers, 309, 1312
Ammonia scrubbing, 309, 1032-33
Amplitude
  definition, 512
  effect on H.T.U. and capacity, 537
Amplitude-frequency product
  definition, 512
  effect on decontamination performance, 574
  effect on H.T.U. and capacity, 537
Analytical and Control Laboratory, 1109-10
  utilities, 1109
  waste disposal, 1109-10

Analytical methods, 1809-12
Antidotes
  nitric acid, 2209-10
  nitrogen oxides, 2211
  sodium hydroxide, 2213
  sulfuric acid, 2212
Aqueous make-up, 801-13
  decontamination solutions, 2106
  demineralization of water, 804-7
  ferrous sulfamate make-up, 808-9
  make-up and distribution facilities, 803-4
  make-up and distribution of process streams, 809-13
  process flow diagrams, 803-4
  routing of nitric acid, 807-8
  sources and consumption of materials, 802-3
  volumes and compositions of streams, 802
Aqueous Make-Up Facility, 1109
  tanks, 1307-8
Aqueous process streams
  make-up and distribution, 809-13
  volumes and compositions, 802
Aromatics and olefins, analytical determination, 1810

B-TYPE SAMPLER, 1805-7
Bayonet replacement sampler, 1807
Bayonet sampler, 1806-7
Beta-Gamma-Offner (BGO) Counter, 210, 1811, 1812
Beta particles, 1902, 2003
  attenuation, 2013
  initial intensity, 2006
  intensity calculations, 2019
Blueprint file numbers, 1121
Boiling point of uranyl nitrate-nitric acid-water systems, 446
Boiling range of diluents, 436
Buildup factor, 2010-11

C-TYPE COLUMNS - see Column HC, Column IC, Column 2E, and Columns, C-type
Canyon
  construction features, 122
  cranes, 1104-5, 1502-5
  equipment removal and repair, 1508-10
  fire detection, 1106
Canyon (cont.)
  fire-fighting features, 1106
  general description, 1104-5
  piping, 1105-6
  shielding, 2021-22
  special features, 1106
  tanks, 1305-7, 1311, 1319-20
  vacuum cleaning, 1106
  vessel and condenser vent systems, 1107
  wash-down nozzles, 1107
  water fog, 1106
Capacitance probes, 1713-15
Capacity (see also Flooding capacity)
  increase with HW #4 flowsheet, 116
  plutonium concentrators, 719, 721
  Purex-Plant design capacity, 103-4
  solvent-extraction columns, 554-66, 1202
  uranium concentrators, 705
Cartridge descriptions, 1203-5
Cartridge height
  effect on H.T.U., 539
Caverns, 1003, 1119
  description, 1027-28
Cavitation, 1213-15
Cell layout, 1105
Central Control Room, 1109
Centrifugation
  feed (HAF), 311
  solvent, 911-13
Centrifuges, 1316-17
Cerium
  analytical determination, 1810
  distribution ratio, 475
Cesium, analytical determination, 1810
Chemical determinations, 1810
Chemical flowsheet - see Flowsheet
Chemical handling precautions, 2207-14
Chemical make-up - see Aqueous make-up
Chemical requirements
  aqueous make-up, 802-3
  Purex Plant, 123
Chemical Tank Farm, 211-A, 1117
  process flow diagram, 803-4
  storage capacity, 1117
  tanks, 1309-10
Chloride ion
  accumulation in Acid Absorber, 1011
  accumulation in Vacuum Fractionator, 1013

Clarification
  dissolver solution, 311
  solvent, 906, 911-13
Class I vessels
  definition, 1302
  design considerations, 1303-4
Class II vessels
  definition, 1302
  design considerations, 1304-5
Class III vessels
  definition, 1302
  design considerations, 1305
Cocurrent extraction, 504
Co-Decontamination Cycle, 112, 603-4
  flow control, 604
  process flow diagram, 602
  steady-state operation, 603
Column equations, 513, 515, 569
"Cold" Solvent Building, 276-A, 1120
  tanks, 1308-9
Column diameter, effect on H.T.U. and capacity, 539-40
Column HA (see also Columns, A-type)
  americium extraction, 417
  curium extraction, 417
  decontamination from fission products, 414-16
  design specifications, 1202-8
  H.E.T.S. and H.T.U. calculations, 519-23
  minimum flow ratio, 528-29
  neptunium extraction, 417
  nitric acid extraction, 416
  plutonium extraction, 413-14
  process description, 412-17
  uranium extraction, 412-13
  uranium reflux, 412
  uranium X_1 and X_2 extraction, 417
Column HC (see also Columns C-type)
  decontamination from fission products, 419
  design specifications, 1202-8
  H.E.T.S. and H.T.U. calculations, 523-26
  minimum flow ratio, 529
  process description, 417-19
  uranium stripping, 417-18
  uranium X_1 and X_2 stripping, 419
Column IA (see also Columns, A-type)
  design specifications, 1202-8
  minimum flow ratio, 528-29
  process description, 420
Column IB Extraction
  design basis, 547
  design specifications, 1402-8
  performance characteristics, 560-62
  process description, 420
Column IB Scrub
  design basis, 547-48
  design specifications, 1202-9
  performance characteristics, 562-63
  process description, 422
Column IC (see also Columns, C-type)
  design specifications, 1202-8
  minimum flow ratios, 529
  process description, 422
Column IO (see also Columns, O-type)
  design specifications, 1202-8
  effects of operating conditions, 910-11
  process description, 907-8
Column 2O (see also Columns, O-type)
  design specifications, 1202-8
  effects of operating conditions, 910-11
  process description, 908
Column 2A
  design basis, 549-50
  design specifications, 1202-9
  performance characteristics, 563-64
  process description, 424-26
Column 2B
  design basis, 550-51
  design specifications, 1202-9
  performance characteristics, 564
  process description, 426
Column 2D (see also Columns, A-type)
  design specifications, 1202-8
  minimum flow ratio, 528-29
Column 2E (see also Columns, C-type)
  design specifications, 1202-8
  minimum flow ratio, 529
Columns, A-type (see also Column HA,IA,2D)
  design basis, 543-45
  performance characteristics, 555-57
Columns, C-type (see also Column HC,IC,2E)
  design basis, 545-47
  performance characteristics, 557-60
Columns, O-type (see also Column IO, 2O)
  design basis, 551-53
  performance characteristics, 565-66
Columns, solvent-extraction (see also Pulse columns), 508-89, 1201-17
  capacity, 554-66, 1203
  cartridge construction, 1205

Columns, solvent-extraction (cont.)
construction, 1209
critical mass control, 1209
"crud" formation, 582-83
description, 509-10
design basis, 542-54
design specifications, 542-43, 1202-9
development of specifications, 542-54
dimensions, 1202
disengaging section, 1206-7
distributors, 1206
drawings, 1209-10
dual-purpose type, 511
emulsifications, 583
emulsifying impurities, 585
emulsion-induced instability, 585-86
extraction performance and capacity, 554-66
functional requirements, 543
instrumentation, 1207, 1710-15
interface instruments, 1710-15
louver plate design, 1204
operating procedures, 602-9
performance characteristics, 529-32, 554-66
pressure instruments, use, 579-82
plate and packing design, 1203-5
pulse conditions, 1202-3
pulse generators, 1210-13
pulse transmission lines, 1213-15
simple type, 511
stage requirements, 526-27
transfer-unit requirements, 526-27
variables affecting performance, 529-41, 554-66
Compton scattering, 2008
Concentration - see Acid concentration, Plutonium concentration, and Uranium concentration
Concentration of uranium and plutonium solutions, 701-29
Concentrators - see Acid concentrators, Plutonium concentrators, and Uranium concentrators
Concentrator corrosion, 1607-8
Condenser vent system, 1107
Condensers, 1314-15, 1319
Connectors - see Remote connectors
Construction materials, 122, 1602-10
bases for selection, 1602
plastics, 1610-12
stainless steel, 1603-10
Contamination clean-up, 2101-2116
Contamination limits
air, 1905-6
clothing, 2115
drinking water, 1905-6
personnel, 1906, 1907
surface, 1907
Cooling water disposal, 1119
Corrosion - see Stainless-steel corrosion
Corrosion rates of stainless steels, 1607, 1608, 1609
Countercurrent multicontact extraction, 504-5
Crane cab gallery, 1107, 1108
Crane Maintenance Platform, 1510
Cranes (see also Master Crane and Slave Crane), 1502-5
Cribs - see Caverns
Critical mass
definition, 2302
Critical mass control, 122, 2302-12
consequences of exceeding the critical mass, 2312
effect of reflux flowsheet, 2311
methods, 2306
plutonium concentration, 723
Purex-Plant, 2306-11
rework effects, 2311
safe geometry design specifications, 2308-9
solvent-extraction columns, 1209
Critical mass of plutonium, 2302-6
effect of concentration, 2304-5
effect of geometry, 2303-4
effect of other elements, 2304
effect of surrounding materials, 2305-6
minimum, 2303
variation with pile exposure, 2303
Cross-over oxidation, process description, 423-24
Curie, 1904, 2004, 209-10
Curium
distribution ratio, 481
extraction in HA Column, 417

DECONTAMINATING SOLUTIONS, make-up and routing, 2106
Decontamination Cell, 1509
Decontamination Factor
definition, 110
Purex-process flowsheet, 110
Decontamination in solvent-extraction columns, 566-79
Decontamination of surfaces, 2101-16
clothing, 2115-16
concrete, 2112
glass, 2112-13
influencing factors, 2105
iron and carbon steel, 2112
Lucite and Plexiglass, 2113
principles, 2103-4
protective coatings, 2114
skin, 2114-15
stainless steel, 2106-11
use of ultrasonics, 2110
Decontamination performance
effect of operating variables, 574-79
HA Column, 414-16
ion-exchange, 428-29, 573
pilot-plant pulse column studies, 572-79
pilot-plant results vs. Purex-Plant requirements, 579
silica-gel, 427-28, 573
vs. N_t for A-type column dual scrub, 571
vs. N_t for A-type column single scrub, 569-70
vs. number of scrub transfer units, 568-71
Decontamination sections, design basis, 566-67
De-entrainment, 708-10, 720, 722, 1008
Deepwell turbine pump, 1402-6
Demineralization of water, 804-7
operating cycle, 806-7
process, 805-6
regeneration of ion exchangers, 806
Demineralized water (also see Demineralization of water), 804-7
distribution, 810
flowsheet requirements, 803
specifications, 805
Demineralizer - see Water Demineralizer
Density (see also Specific gravity)
ferrous ammonium sulfate-water solutions, 456
plutonium nitrate-nitric acid water solutions, 448
sulfamic acid, 454
tributyl phosphate-diluent solutions, 438-39
uranyl nitrate-nitric acid-tributyl phosphate-diluent solutions, 440-41
uranyl nitrate-nitric acid-water solutions, 445
Design basis
Purex Plant, 103-4
solvent-extraction columns, 542-59
Dibutyl phosphate
analytical determination, 1810
properties, 432-33, 434-35
Differential-pressure instruments, 1710-15
Diffusivity, effect on H.T.U., 535-36
Diluent
chemical properties, 435, 437-38
choice of, 406
function, 406
handling hazards and precautions, 2204-5, 2209
physical properties, 435-37
physiological effects, 2208-9
radiation stability, 437
rapid nitration, 2207
tolerance concentrations, 2209
Diluent-tributyl phosphate - see tributyl phosphate-diluent
Dilution flasks, 1805
Disengaging sections, 1206
Disengaging time, 460
analytical determination, 1810
Dispersion characteristics, 457-61
Dispersion times, 460-61
Disproportionation of plutonium, 450
Dissolver off-gas
composition, 308
filtration, 310-11
fission-product radioactivity, 308
Dissolver off-gas treatment, 308-11
ammonia scrubbing, 309
procedure, 316
Dissolver solution
nitrous acid treatment, 314

Dissolver Tower, 1311-12
  nitrogen oxide recovery, 305-6
Dissolvers, 1311
Distribution ratio, definition, 404, 462
Distribution ratios
  americium, 481
  beta-emitting fission products, 472
  curium, 481
  fission products, 471-77
  gamma-emitting fission products, 472
  iodine, 474
  metallic ions, 481-82
  neptunium, 480-81
  niobium, 473-74
  nitric acid, 478-79
  plutonium, 467-71
  plutonium (III), 468
  plutonium (IV), 468
  plutonium (VI), 468
  rare earths, 475
  ruthenium, 473
  uranium, 462-67
  uranium X_1 and X_2, 479-80
  zirconium, 473-74
Distributors, solvent-extraction columns, 1206
Diversion boxes, 1019-20, 1507-8
Dosage rate - see Radiation intensity
Downdraft dissolving, 305-6
Dual-purpose column, definition, 511
Dual-scrub column, definition, 511

ELECTRICAL CONNECTORS, 1506
Electrical power distribution, 1112-13
Emulsions
  effect on column operation, 583-86, 614
Emulsion-type column operation, 530
Energy level, 2003
  effective mean, 2014
Engineering flow diagrams, 1121
Entrainment
  plutonium concentrators, 719-20, 723, 726-27
  pulse columns, 584, 615
  uranium concentrator, 708-10, 714-15
Equilibrium (also see Distribution ratios)
  distribution ratio, 404
  plutonium-tributyl phosphate, 406-8
  uranium-tributyl phosphate, 406-8, 462-63
Equilibrium diagram (also see operating diagram)
  plutonium, 471
  uranium, 467
Equilibrium line, definition, 513
Equipment - see Process equipment and specific entries
Equipment disposal facility, 1120
Explosion protection, 2202-7
Explosive limits
  definition, 2202
  diluent, 2203-4
  hydrogen, 2205
  kerosene, 436
Extraction
  definition, 403, 510
  heat of extraction, 461
Extraction factor
  definition, 409-10, 514
  effect on H.E.T.S. and H.T.U., 514, 516

FEED (HAF) ADJUSTMENT, 313-14
  procedure, 316
Feed centrifugation, 311
Feed Centrifuge, 1316-17
Feed preparation, 111, 302-18
  centrifugation, 311
  chemical adjustment, 313
  clarification, 311
  effect of processing rate on procedure, 316-17
  head-end treatment, 311-13
  off-gas treatment, 308-11
  off-standard conditions, remedies, 317-18
  procedure, 314-18
  process flow diagram, 302, 314
  slug dissolution, 304-7
  slug jacket removal 302-4
Ferrous ammonium sulfate, 455-57
  physical properties, 455-56
  stability, 456-57

Ferrous iron, analytical determination, 1810
Ferrous sulfamate, 453-55
chemical properties, 453-54
distribution, 811-12
physical properties, 453
reduction of plutonium, 449-50
stability, 453-54
Ferrous sulfamate preparation, 808-9
Fiberglas filters, 310-11, 1033-34, 1115, 1313
Filters
off-gas, 310-11, 1033, 1313
ventilation air, 1115-16, 1033-34
Filtration
gaseous wastes, 1031-32
ventilation air, 1032, 1115-16
Final Plutonium Decontamination Cycle, 113-14, 607-9
alternate flowsheet, 114
flow control, 608
process description, 424-26
process flow diagram, 602
steady-state operation, 608
Final Uranium Decontamination Cycle, 113, 606-7
process description, 423
process flow diagram, 602
steady-state operation, 607
Fire and explosion protection, 123, 2202-7
Canyon, 1106
Plant precautions, 2204-5, 2206-7
Fire point, definition, 2202
Fission, 204-5
Fission, energy release, 205
Fission-product distribution ratios (see also Distribution ratios), 471-77
Fission-product radioactivity
calculation, 211-17
variation with irradiation history, 217-18
Fission products
adsorption in soil, 1027
chemistry of dissolution, 307
decay, 205-6, 209, 215-17
decay during "cooling", 215-16
decontamination in HA Column, 415-16
Fission products (cont.)
decontamination in HC Column, 419
decontamination in pulse columns, 566-79
formation and fission yield, 208-9
mass transfer (scrubbing), 567-68
measurement of radioactivity, 210
properties of process importance, 109-10, 210-11
radioactivity in dissolver off-gas, 308
radioactivity in Purex feed metal, 217-18
Fission yield, 208
Flash point
analytical determination, 1810
definition, 2202
diluent, 2203
tributyl phosphate, 2203
tributyl phosphate-diluent, 439, 2203
Flooding
definitions, 511
detection, 581, 613
remedy, 614
Flooding capacity
definition, 511
effect of design variables, 537-41
effect of operating variables, 532-37
effect of physical properties of liquids, 535-36
effect of wetting characteristics of cartridge, 538
Flow diagrams - see Process flow diagrams
Flow measurement and control, 1704-10, 1735-36
Flow meters
displacement meters, 1709-10
electronic rotometer, 1704-5
head-above-orifice flow meter (flow pot), 1707-8
metering pumps, 1708-9
orifice meter, 1706-7
pneumatic rotometer, 1706
Flow rate (also see Volume velocity)
effect on apparent density, 580-81
Flow ratio
effect on H.T.U. and capacity, 535, 556, 558-59
minimum in A-type columns, 528-29

Flow ratio (cont.)
minimum in C-type columns, 529
pinching, 516, 527-28
Flowsheet
alternate, 115-16
alternative plutonium decontamination cycle, 114
decontamination factors, 110
effect on decontamination performance, 576-77
HW #3, 110
HW #4, 116
low-acid vs. high-acid, 576-77
reflux, 426
stream designations, 110-11
Fluorothene, 1611-12
applications in the Purex Plant, 1612
radiation stability, 1611-12
Fractionator - see Vacuum Fractionator
Frequency
effect on capacity, 530-32, 555-56, 558
effect on D. F., 574
effect on H.T.U., 532-33, 555-56, 558

GAMMA RADIATIONS, 1903, 2003
attenuation theory and principles, 2007-13
initial intensity, 2005
intensity calculations, 2015-19
Gamma Ray Spectrometer (GRS), 210
Gamma Scintillation Counter (GSC), 1811-12, 210
Gang valves, 1410-11
Gas samplers, 1808-9
Gas-transfer jets, 1409
Grabber, 1507
Gross beta, analytical determination, 1810

HA COLUMN (see Column HA)
Hanford Atomic Products Operation
geology of site, 1026-27
production-area layout, 1102
Hazards other than radiation, 2201-15
Hazards, radiation, 1901-18
HC Column (see Column HC)
Head-End Control Room, 1109
Head-end treatment
ruthenium volatilization, 313
scavenging zirconium-niobium, 313
Health Monitor Stations, 1908
Heat of extraction, 461
Heat of stripping, 461-62
Height equivalent to a theoretical stage - see H.E.T.S.
Height of a transfer unit - see H.T.U.
H.E.T.S.
calculations, 519-21, 523-24
definition, 513
relation to H.T.U., 516
Hot Shop, 1509
H.T.U.
calculations, 521-23, 524-26
definition, 514-16
effect of design variables, 537-41
effect of operating variables, 532-37
effect of physical properties of liquids, 536
effect of solute concentration, 535
effect of wetting characteristics of cartridge, 538
Hydrogen
evolution during feed preparation, 2405
evolution during ferrous sulfamate preparation, 2406
explosive limits, 2405
Hydrogen ion concentration - see pH

IGNITION TEMPERATURE
definition, 2202
kerosene, 436
Impact wrench, 1506-7
"Inextractable" uranium and plutonium, 582
In-line chemical instrumentation, 1718-19
Instrument identification symbols, 1702
Instrumentation, 1701-45
column interface control, 1710-15, 1726-28, 1730-31, 1735-37
control rooms, 1703
controlled elements, 1740-43

Instrumentation (cont.)
Dissolver and off-gas systems, 1721-23
electric-to-pneumatic converters, 1733-34
electrical transmitters, 1730-33
flow measurement and control, 1704-10, 1735-36
in-line monitors, 1718-19
instrument engineering flow diagrams, 1121
liquid-level measurement and control, 1710-13, 1734-38
panel boards, 1703
plutonium concentrators, 1724-25
pneumatic transmitters, 1726-30
process stream color code, 1703
Purex-Plant instruments, 1702-3
purge-type pressure instruments, 1710-13
radiation counting, 210, 1811-17
radiation monitoring instruments, 1716-18, 1732-33, 1734, 1908-9, 1910
receiving and controlling elements, 1734-40
special systems, 1721-26
temperature measurement and control, 1715-16, 1734, 1736-38
uranium and acid concentrators, 1723-24
Waste Rework Tank, 1725
Interface foam, 583-84
Interface location, effect on decontamination performance, 577
Interface measurement and control, 1710-15, 1730-32, 1736-38
Interfacial tension, 457, 458-59
effect on column H.T.U. and capacity, 535-36
Iodine
analytical determination, 1810
distribution ratios, 474
evolution during HAF chemical adjustment, 314
evolution from Dissolver, 308
removal from off-gas by Silver Reactors, 309-10, 1030-32
Ion-exchange plutonium decontamination, 427-28
Iron powder, flowsheet requirements, 803
Iron, total
analytical determination, 1810
"Irreversible" extraction, 571-72

JACKET REMOVAL - see Slug jacket removal
Jets, 1408-11
controllers for, 1410-11

KRYPTON, evolution from Dissolver, 308

LABORATORY - see Analytical and Control Laboratory
Liquid-transfer jets, 1408-9
Louver plates, 1204
effect on H.T.U. and capacity, 540-41

MAINTENANCE - see Remote maintenance
Mass and energy equivalents, 205-6
Master Crane, 1104, 1502-3
Materials of construction - see Construction materials
Mean-free path, 2010, 2011, 2013
Microphones, 1721
Mixer-settlers, 506-8
Mixer-settler-type column operation, 530
Monobutyl phosphate properties, 432-33, 434-35

NEPTUNIUM
distribution ratio, 480-81
extraction in HA Column, 417
Neutralizer, operation, 1044-45
Neutron reactions, 204-7
Niobium
analytical determination, 1810
distribution ratio, 473-74
Nitric acid
analytical determination, 1810
choice of virgin or fresh, 807-8
complexing with tributyl phosphate, 478
distribution ratios, 478-79
extraction in HA Column, 416
flowsheet requirements, 803
handling hazards and precautions, 2210

Nitric acid (cont.)
operating diagrams, 526
physiological effects, 2209-10
recovery - see Acid recovery
routing, 807-8, 810-11
sources and storage, 803, 807-8
tolerance concentrations, 2210
Nitric acid fractionation - see Vacuum Fractionator
Nitric acid proportioning system, 1725-26
Nitrite treatment of 2DF
effect on decontamination performance, 578
Nitrogen oxides
handling hazards and precautions, 2211-12
physiological effects, 2210-11
tolerance concentrations, 2211
"Nitrous fumes" - see Nitrogen oxides
Nozzle plates
effect on H.T.U. and capacity, 541
Nuclear reactions, 204-8
fission, 204-6
formation of plutonium, 206-7
mass and energy relationships, 205

O-TYPE COLUMNS - see Column IO, Column 20, and Columns, O-Type
Off-gas (see Dissolver off-gas)
Off-gas equipment, 1311-13
Off-Gas Filters, 1313
Off-standard condition remedies
acid absorption, 1042-43
acid concentration, 1040-42
feed preparation, 317-18
plutonium concentration, 726-28
solvent extraction, 612-16
uranium concentration, 713-15
vacuum fractionation, 1043-44
waste disposal, 1046
Off-standard streams rework, 118, 617-18, 1013-14
Operating diagrams
acid absorption, 1009-11
construction, 517-29
fission products, 568
plutonium concentration, 721-22
Purex column, 526
Operating diagrams (cont.)
tributyl phosphate steam stripping, 707
vacuum fractionation, 1012-13
Operating line (also, see Operating diagrams)
definition, 513
derivation for Purex columns, 517-19
Operating problems, pulse columns, 582-87
Orifice meters, 1706-8
Oxidation potentials, plutonium, 449-50

PACKED COLUMN, 508-9
Packing design, 1204
Pair production, 2009
Panel boards, 1703
Partition Cycle, 112-13
effect of production rate on flow ratio, 606
flow control, 606
procedure, 604-6
process discription, 419-23
process flow diagram, 602
steady-state operation, 605
Periscopes, crane, 1503
pH
analytical determination, 1810
in-line measurement, 1720, 1732, 1734
uranium nitrate-nitric acid-water systems, 446
Phase dispersion
emulsion-type, 530
mixer-settler-type, 530
Photoelectric absorption, 2008
Photoreduction of plutonium, 451-52
Physical property determinations, 1810
Physiological effects of process chemicals, 2207-14
Pile, 208
"Pinching" flow ratio, definition, 516
Pipe and Operating Gallery, 1107-8
tanks, 1308
Pipe connectors, 1506
Pipe Trench, 1104-5, 1105-6
Pipetter, remote, 1805
Plastic construction materials, 1610-12

Plutonium
analytical determination, 1810
chain reactions, 2302
chemistry in concentration step, 718-19
chemistry of dissolution, 306-7, 314
chemistry of HAF chemical adjustment, 314
complexing with tributyl phosphate, 406-8, 467
content in irradiated slugs, 207
content in liquid wastes, 1004
critical mass, 2302-6
cross-over oxidation, 423-24
decontamination by ion exchange, 427-28
distribution ratio, 467-71
equilibrium with tributyl phosphate, 406-8
extraction in HA Column, 413-14
formation from uranium, 206-7
formation of isotopes, 207
in-process inventory, 123
operating diagrams, 526
per cent recovery in Plant, 104
Plant processing capacity, 104
product composition, 105-6, 716-718
product impurities, 106
properties of process importance, 109
reflux flowsheet, 426
specifications, 105-6, 607
Plutonium concentration, 715-28
concentrator safety devices, 724
de-entrainment, 720, 722
equipment description, 719, 720-721, 1318
off-standard conditions, detection and remedies, 726-28
physical properties and compositions of solutions, 717-18
precipitate dissolution, 719, 728
procedure, 723-28
process description, 720, 721-22
product sampling and packaging, 722-23, 726
steam stripping, 720
variation of Pu concentration with pile exposure level, 716
Plutonium Concentrators, description, 720-21, 1318
Plutonium (IV) polymer, 452-53, 718-19
Plutonium nitrate aqueous solutions
chemical properties, 448-53
disproportionation, 450-51
gas evolution, 452
oxidation potentials, 449
oxidation-reduction, 449-51
photoreduction, 451-52
physical properties, 448
Plutonium (IV) polymer formation, 452-53
radiation stability, 451-52
Plutonium product solution
properties and composition, 105-106, 716-18
specifications, 105-6, 607
Plutonium reflux flowsheet, 114
Plutonium Stripper, description, 719, 1318
Pool Cell, 1509
Pressure drop in pulse columns, 1215
Pressure effects in pulse columns, 1214
Pressure gages, 1715, 1734-35
Pressure instruments
use, 579-82
Process engineering (solvent extraction), 501-94
Process equipment (also see specific entries)
Class I vessels, 1302, 1303-4
Class II vessels, 1302, 1304-5
Class III vessels, 1302, 1305
classification, 1302
design considerations, 1303-5
Process flow diagrams, 1121
acid recovery and waste disposal, 1005
aqueous make-up, 803
feed preparation, 302, 314
solvent extraction, 602
solvent treatment, 913
Process Stack, 1034
Processing Building, 202-A, 1104-15
Canyon, 1104-7
galleries, 1107
laboratory, 1109
layout, 119-20, 1104
Product Removal Room, 1107

Processing Building, 202-A (cont.)
service areas, 1108-9
shielding, 120-21, 2020-22
utilities, 1110-13
ventilation, 123, 1113-15
Product Removal (PR) Can
description, 722-23, 1319
filling, 726
Product Removal (PR) Room, 1107
samplers, 1808
Product Removal Vault, 1107
Product removal vessels, 1318-20
Protective clothing, 1911
contamination limits, 2115
Protective coatings, 1612-15
applications in the Purex Plant, 1612-13
decontamination, 2114
epoxy-based, 1614
repair and decontamination by painting, 1614-15
vinyl-based, 1613-14
Pulse amplitude - see Amplitude
Pulse columns (see also Columns, solvent-extraction), 509-89, 1201-17
basic principles, 509-10
cavitation, 1213-15
fission-product decontamination, 566-79
performance characteristics, 529-532
phase-dispersion patterns, 529-530
pulse transmission, 586-87, 1213
scale-up factors, 539-41
variables affecting performance, 529-41, 554-66
Pulse-column variables, 529-41
design variables, 537-41
operating variables, 532-37
Pulse frequency, definition, 512
Pulse generators
description, 1210-13
design basis, 553-54, 1210
Pulse leg - see Pulse transmission lines
Pulse transmission, 586-87, 1213
Pulse transmission lines, 1213-15
cavitation calculations, 1213-15
design basis, 1213
Pulse transmission lines (cont.)
dimensions, 1215
Pulse wave shape
effect on H.T.U. and capacity, 541
Pulsed volume velocity, 512-13
Pumps, 1407-11
Canyon service, 1402-6
metering, 1708
non-Canyon service, 1406-8
Purex Plant (also see specific entries), 1101-22
area layout, 118
breathing air system, 1111
capacity, 103-4
capacity with HW #4 Flowsheet, 116
chemical requirements, 123
critical mass control, 2306-11
design basis, 103-4
electrical power distribution, 1112-13
equipment drawings, 1121
facilities list, 119
filtered water system, 1112
function, 103-8
general description, 1102-21
general facilities, 1103-4
in-process inventory, 123
instrument air system, 1111
layout, 1102-4
master drawing list, 1121
outside facilities, 1115-20
piping drawings, 1121
Processing Building, 202-A, 119-120, 1104-15
raw water system, 1111-12
rework of off-standard streams, 118, 617-18, 1013-14
service air system, 1111
special features, 120-23
steam system, 1110
waste storage requirements, 123
Purex process
acid recovery and waste disposal, 114-15, 1001-49
aqueous make-up, 801-13
basic principles, 403-11
basis, 404-5
chemical requirements, 123
comparison to Redox process, 117

Purex process (cont.)
concentration of uranium and plutonium, 701-29
engineering flow diagrams, 1121
feed preparation, 111, 301-22
flowsheet decontamination factors, 110
flowsheets, 103, 110, 115-16
principles, 108-18
process flow diagrams, 1121
solvent extraction, 111-14, 501-94
solvent treatment, 114, 901-20
stream designations, 110-11
waste storage requirements, 123

RADIATION
effects on the body, 1914-18
shielding, 2001-23
treatment of injuries, 1917
types, 1902-3, 2003
units, 1903-4, 2003-5
Radiation exposure limits, 1903-7
air contamination limits, 1905-6, 1913
drinking water contamination limits, 1905-6
general body exposure, 1904-5
hand and forearm exposure, 1905
personnel contamination limits, 1906-7
surface contamination limits, 1907
Radiation hazards, 1902-18
Radiation intensity, 2003-19
at a receptor, 2007-19
initial, 2003-7
Radiation intensity calculations, 2014-19
Radiation monitoring
environs, 1914
equipment, 1907-9
Health Monitor Stations, 1908
instruments, 1716-18, 1732-33, 1734, 1908-9, 1910
operating areas, 1907-9
personnel, 1909-11
stack gas, 1913-14
ventilation air, 1912-13
Radiation monitoring methods, 1907-1914
Radiation protection standards, 1909-1910
Radiation stability
diluents, 437
fluorothene, 1611-12
plutonium solutions, 452
teflon, 1610-11
tributyl phosphate, 430
Radiation Zones, 1907
Radioactivity
calculations, 211-17
conversion of units, 215
feed metal, 217-18
liquid wastes, 1003
measurement, 210
units, 209-10, 2003-5
Radiochemical determinations, 1810-1812
Railroad Tunnel, 1105
shielding, 2020
Rad, 1904, 2005
Rare earths, distribution ratios, 475
Raschig rings
effect on H.T.U. and capacity, 532, 541
Reactors. 208
Recorder controllers, 1736-38
Reducing agents, 449-50, 453-57
Reflux, definition, 512
Reflux flowsheet, 426
Reflux of uranium in HA Column, 412
Regulated Shop, 1509
Rem, 1904.
Remote connectors, 1505-6
Remote maintenance, 121-22
Crane Maintenance Platform, 1510
Decontamination Cell, 1509
Hot Shop, 1509
Pool Cell, 1509
Regulated Shop, 1509
removal of "hot" equipment, 1508
Remote operation, 121
Remote operation and maintenance (see also Remote maintenance), 1501-10
cranes, 1502-5
diversion boxes, 1507-8
grabber, 1507
impact wrench, 1506-7
principles, 1502
remote connectors, 1505-6

Remote operation and maintenance (cont.)
removal and repair of equipment, 1508-10
Remote pipetter, 1805
Rep, 1904, 2005
Rework of off-standard process streams, 118, 616-18, 726, 1013-1014
Roentgen, 1903, 2004
Rotometers
electronic, 1704-5
pneumatic, 1706
Ruthenium
analytical determination, 1810
distribution ratios, 473
volatilization, 313, 1008, 1041

SAFETY
critical mass control, 122, 723, 1209, 2301-12
decontamination of surfaces, 2101-16
fire and explosion protection, 123, 1106, 2201-7
health protection from radiations, 1901-18
physiological effects of process chemicals, 2207-14
radiation intensities and shielding, 2001-23
Salting, 408-9
Salting agent
choice, 409
cost reduction by use of nitric acid, 1002
Sample Gallery, 1107, 1108
samplers, 1802-9
Sample stations, 1802
Samplers, 1802-9
A-type, 1803-5
B-type, 1805-7
C-type, 1807-8
gas, 1808-9
P-1, 1808
stack gas, 1913-14
ventilation air, 1912-13
Sampler jet, 1409, 1804
Sampler jet and cup assembly, 1804
Sampling, 1802-9
general description of facilities, 1802-3
Scale-up factor, 539-40
Scattering, gamma radiation, 2011-2013
Schmidt Number, 536
Scrubbing, definition, 511
Scrub section
design, 566-74
effect of height on decontamination factor, 574-75
Self-concentration of liquid wastes, 447, 1004, 1020-24
"bumping" in tanks, 1022
degree of concentration, 1022-23
rate of heat generation, 1020-22
"Shad-roe" emulsion, 584
Shielding, 2001-23
A-type sampler, 1803-4
apertures, 2021
calculations, 2014-19
Purex Plant, 2020-22
theory and principles, 2007-13
waste storage tanks, 1018
Sieve plates
description, 1203-4
fluorothene, 1204
stainless steel, 1203
effect of design on performance, 538-39
Silica-gel uranium decontamination, 427-28
Silver Reactor
chemistry of iodine removal, 309-310, 1030-31
Dissolver off-gas system, 1313
regeneration, 310
vessel-vent, 1320
Simple column, definition, 511
Simple contact extraction, 503
Simple multistage extraction, 504
Sky shine, 2012-13
Slave Crane, 1104, 1503-4
Slugs, 104, 202-3
alternate types, 203
"cooling" time, 210
dimensions and composition, 202
fabrication, 202-3
fission-product decay during "cooling", 215-16
handling procedure, 218-19
irradiation time, 210
radioactivity variation with irradiation history, 217-18

Slugs (cont.)
storage basin, 219
Slug carrier
description, 1310-11
shielding, 2020
Slug dissolution, 304-7
chemistry of fission products, 307
chemistry of plutonium dissolution, 306-7, 314
chemistry of uranium dissolution, 305
nitric acid consumption, 306
nitrogen oxide recovery, 305-6
procedure, 315
Slug jacket removal
acid, 304
caustic, 302-4
disposal of wastes, 1023-24
procedure, 315
Slug storage basin, 1105
Sodium
analytical determination, 1810
Sodium carbonate
flowsheet requirements, 803
Sodium hydroxide
analytical determination, 1810
flowsheet requirements, 803
handling precautions, 2213
physiological effects, 2213
solution make-up and distribution, 811
storage, 811
tolerance concentrations, 2213
Sodium nitrate
analytical determination, 1810
flowsheet requirements, 803
handling precautions, 2207, 2214
solution make-up and distribution, 811
Sodium Nitrate Storage, 2714-A, 1117
Sodium nitrite
analytical determination, 1810
flowsheet requirements, 803
solution make-up and distribution, 811
Solubility
dibutyl phosphate in water, 434
diluent in water, 437
ferrous ammonium sulfate in water, 456
Solubility (cont.)
ferrous sulfamate in water, 453
plutonium nitrate in water, 448
sulfamic acid in water, 454
tributyl phosphate in aqueous solutions, 442-43
uranyl nitrate in aqueous solutions, 444
Solvent
choice of, 405
flammability properties, 2203-4
handling hazards and precautions, 2204-5, 2208-9
physiological effects, 2208-9
tolerance concentrations, 2208, 2209
uranium saturation in, 408
Solvent building - see "Cold" Solvent Building, 276-A
Solvent centrifugation, effect on decontamination performance, 578
Solvent Centrifuge, 1316-17
Solvent-extraction
basic principles, 403-4, 503-17
calculations, 517-26
chemical variables, 403-29
definition of terms, 510-16
equipment types, 505-9
flowsheets, 111-14
process chemistry, 401-99
process description, 403-29
process engineering, 501-94
process flow diagrams, 602
Solvent-extraction columns - see Columns, solvent-extraction and pulse columns
Solvent-extraction performance
measurement, 513-16
variables affecting, 409-11, 532-41, 554-65
Solvent-extraction procedure, 601-18
Solvent impurities
diluent reaction products, 903-4
entrainment, 905-6
fission-product activity, 904-5
tributyl phosphate degradation products, 902-3
uranium and plutonium, 905
Solvent treatment, 114, 901-14
alternate system, 907
centrifugation, 911-13
effects of operating conditions, 910-11

[redacted] [redacted]

Solvent treatment (cont.)
flowsheet, 114
methods, 906-7
off-standard operating conditions, detection and remedy, 916-19
procedures, 913-19
process chemistry, 908-10
process flow diagrams, 913
solvent impurities, 902-6
solvent recovery, 914-15
start-up and shutdown procedures, 915-16
Solvent washing, 906, 907-11
Specifications
plutonium product, 105, 607-8
uranium product, 106-8, 606-7
Specific gravity (also see Density)
analytical determination, 1810
tributyl phosphate, 429
Specific gravity, apparent
effect of flow rate and pulsing conditions, 580-81
measurement in columns, 579-80
Specific-gravity instruments, 1710-13, 1736-38
Specific-gravity tube, 1805
Spray column, 508
S.P.R.U. mixer-settler, 506-8
Stack, 1034
Stages
calculation of H.E.T.S., 519-21, 523-24
definition of a theoretical stage, 513-14
Purex column requirements, 526-27
Stainless steel
applications in the Purex Plant, 1603-4
corrosion phenomena, 1605-7
welding, 1604-5
Stainless-steel corrosion, 1605-7
Acid Absorber, 1609
at the welds, 1605
concentrators, 1607-8
rates, 1607, 1608, 1609
Vacuum Fractionator, 1609-10
Storage Gallery, 1107-8
Strainers, 1320
Stream designations, 110-11
Stripping, definition, 403, 511
Stripping
heat of stripping, 461-62
Sulfamic acid, 454-55
chemical properties, 455
flowsheet requirements, 803
for ferrous sulfamate make-up, 803, 808-9
physical properties, 454
Sulfuric acid
handling precautions, 2213
physiological effects, 2212
tolerance concentrations, 2212
Surface tension, 457-58
Surface-wetting characteristics, 459

TACHOMETERS, 1721
Tanks, "cold", 1307-10, 1320-21
Aqueous Make-Up Facility, 1307
chemical storage, 1309-10
"Cold" Solvent Treatment Building, 276-A, 1308-9
Pipe and Operating Gallery, 1308
Recovered Acid Vault, 1309
Tanks, "hot", 1305-7, 1311, 1319-20
Canyon area, 1305-7
Dissolvers, 1311
product removal, 1318, 1319-20
Teflon, 1610-11
Television system, 1503
Temperature
effect on H.T.U. and capacity, 536-37, 556, 559
Test wells, 1020
Thermometers, 1715-16
Transfer unit
definition, 410, 514-16
Purex column requirements, 526-27
Tributyl phosphate (TBP)
analytical determination, 1810
chemical properties, 429, 430-434
complexing with uranium and plutonium, 406-8
degradation, 431-33, 703-4, 902
equilibrium with plutonium, 406-8
equilibrium with uranium, 406-8
flammability properties, 2203

Tributyl phosphate (TBP) (cont.)
handling hazards and precautions, 2208
hydrolysis, 431-433, 703-4
nitric acid reaction, 433-34, 704
physical properties, 429, 430
physiological effects, 2208
radiation stability, 430
rapid nitration operation safeguards, 1007
rapid reactions, 433-34, 704
specifications, 429
uranyl nitrate reaction, 433-34
Tributyl phosphate-diluent
physical properties, 438-40
Tributyl phosphate-diluent-uranium nitrate-nitric acid systems, physical properties, 440-43
Tributyl phosphate stripping
plutonium product stream, 720
uranium concentration, 707-8

UNDERGROUND STORAGE TANKS, 1118
corrosion, 1024
design temperature, 1024
Underground Storage Tank Farm, 241-A (also see Waste disposal), 1016-24, 1118
thermocouple installation, 1024
Uranium
analytical determination, 1810
chemistry of dissolution, 305
complexing with tributyl phosphate, 406-8, 462-63
content in liquid wastes, 1004
decontamination with silica gel, 427-28
distribution ratios, 462-67
equilibrium with tributyl phosphate, 406-8, 462-63
extraction in HA Column, 412-13
in-process inventory, 123
isotope content of slugs, 210-11
nuclear reactions, 204-8
operating diagrams, 526
per cent recovery in Plant, 104
Plant processing capacity, 103-4
product composition, 106-8
product impurities, 107-8
product specifications, 106-8,606-7
properties, 304
properties of process importance, 108-9
reflux in HA Column, 412

Uranium (cont.)
saturation in solvent, 408
stripping in HC Column, 417-18
Uranium concentration, 702-15
concentrator safety devices, 711
de-entrainment, 708-10
equipment description, 704-5
off-standard conditions, remedies, 713-15
physical properties and compositions of solutions, 702-3
procedure, 710-15
process description, 705-7
"red oil" formation, 704
steam stripping, 707-8
tributyl phosphate hydrolysis, 703-4
Uranium concentrators, 704-5, 1313-14
Uranium distribution ratio
analytical determination, 1810
Uranium nitrate, aqueous solutions
chemical properties, 444, 446
physical properties, 444-47
Uranium product specifications, 106-8, 607
Uranium saturation of solvent phase
effect on decontamination performance, 576
Uranium Storage Tank Farm, 203-A, 1117
tanks, 1309-10
Uranium transfer rate
analytical determination, 1810
Uranium X_1 and X_2
distribution ratio, 479-80
extraction in HA Column, 417
stripping in HC Column, 419

VACUUM FRACTIONATOR (also see Acid recovery)
chloride removal, 1013
corrosion, 1609-10
description, 1011, 1316
operating diagram, 1012-13
operation, 1039
Vacuum Fractionator Building, 1120
Valves, Hammel-Dahl air-operated, 1740-42
Vapor pressure
diluent, 436
tributyl phosphate, 430
tributyl phosphate-diluent, 440
Variable-flow jets, 1409-10

Ventilation air
exhaust fans, 1034
filtration, 1032
Process Stack, 1032, 1034
Ventilation system
exhaust fans, 1116
filter, 1115-16
Laboratory, 1114
sampler exhaust, 1114
Process Stack, 1116
Processing Building, 202-A, 1113-14, 1115-16
Product Removal Room, 1115
Vessel Vent Silver Reactor, 1320
Vessel vent system, 1107
Vibration meter, 1721
Viscosity
effect on column H.T.U. and capacity, 535-36
tributyl phosphate-diluent, 439
uranyl nitrate-nitric acid-tributyl phosphate-diluent systems, 442
uranyl nitrate-nitric acid-water systems, 445-46
Volume velocity
definition, 512
effect on D.F., 575-76
effect on H.T.U., 533-35, 555-56, 558

WASTES (also see Waste disposal)
radioactivity of liquid wastes, 1003
volumes of liquid wastes, 1003
Waste concentration - see Acid recovery and Self-concentration of liquid wastes
Waste disposal (also see Acid recovery and waste disposal), 1002-5, 1014-35, 1044-46
coating removal wastes, 1023-24
dry wastes, 1035
gaseous wastes, 1029-34
ammonia scrubbing, 1032-33
disposal through stack, 1032
disposal methods, 1004
filtration, 1031-32
fission-product content, 1029-30
iodine removal, 1030-31
radioactivity, 1004
volumes, 1004
Laboratory wastes, 1034-35
liquid wastes, 1014-29
disposal methods, 1003
plutonium content, 1004
Waste disposal (cont.)
liquid wastes (cont.)
radioactivity, 1003
self-concentration, 447, 1004
storage requirements, 123
uranium content, 1004
volumes, 1003
liquid wastes, high-activity, 1015-24
neutralization, 1015-16
process flow diagrams, 1015
properties, 447
self-concentration, 447, 1020-24
storage facilities, 1016-20
liquid wastes, low-activity, 1025-28
basis for selection of disposal method, 1025-26
course of caverned wastes, 1026-27
liquid wastes, negligible-activity, 1028-29
off-standard conditions, detection and remedies, 1046
procedures, 1044-46
test wells, 1020
Waste storage facilities - see Underground Storage Tank Farm, 241-A
Water Demineralizer
description, 1320-21
operating cycle, 806-7
Water, demineralized - see Demineralized water
Water systems
demineralized, 804, 810, 1112
filtered, 1112
raw, 1111-12
Weight-factor instruments, 1710-13, 1734-35
Wobble meter, 1721

XENON, evolution from Dissolver, 308

ZIRCONIUM
analytical determination, 1810
distribution ratio, 473-74