This document was too large to scan as a whole document, therefore it required breaking into smaller sections.

DOCUMENT NUMBER: HW-31000

SECTION 1 OF 2

TITLE: Purex Technical Manual

DATE: 3/25/1955

ORIGINATOR:

CO: GE

RECIPIENT:

CO:

REFERENCES:

300 N

C-65

[redacted] DECLASSIFIED

HW-31000

HANFORD TECHNICAL RECORD

This document consists of 657 pages; No. 54 of 80 copies. Series [redacted]. Plus 50 tables and 185 figures.

PUREX TECHNICAL MANUAL

Chemical Development Sub-Section
Separations Technology Section
Engineering Department

March 25, 1955

CIRCULATING COPY
RECEIVED 700 AREA
JAN 2 1965
RETURN TO
GENERAL ELECTRIC CO.
DOCUMENT T&A FILES

Classification cancelled (Change to
UNCLASSIFIED)
By Authority of CG-SS-2 610 et al

BUZZ HAMMER WHC SEC SPECIALIST
By RE VANDERCOOK 5-19-94
Verified By K Rice 6-1-94
Robin Traveller 6/2/94

HANFORD ATOMIC PRODUCTS OPERATION
RICHLAND, WASHINGTON

RECEIVED - 200 AREAS
DOCUMENT FILES
FEB 17 1966
RETURN TO ISOCHEM INC.
271-U Bldg. - 200 West

Operated for the Atomic Energy Commission
by the
General Electric Company
under
Contract #W-31-109-eng-52

BEST AVAILABLE COPY

[redacted]

Route To:	Payroll No.	Location	Signature	Date
W. H. Reas	12691	325		
D R Oden	14508	1101N	DEC 22 '64	
~~CPD~~	~~70000~~	~~271U~~	12-7-65	
~~Extra~~				
J. M. Jacques	60416	271-T	MAR 5 1968	
M L Madsen	61264	202A	NOV -2 1972	7/13/73
W. J. Hanson	60129	222-B	MAY 21 1974	7/11/74
E. C. VOGT	65011	222-B		
~~E C Vogt~~	~~65011~~	~~222B~~	FEB 23 1982	

DECLASSIFIED

[redacted]

Distribution:

1-2. A.E.C., Hanford Operations Office - Attn: D. F. Shaw
3. C. R. Anderson
4. R. H. Beaton
5. G. J. Behling
6. R. S. Bell
7. J. M. Blackburn
8. J. G. Bradley
9. R. J. Brouns
10-11. R. E. Burns
12. C. P. Cabell
13. H. A. Carlberg
14. W. N. Carson
15. V. R. Chapman
16. V. R. Cooper
17. R. N. Donelson
18. V. D. Donihee
19. E. P. Galbraith
20-22. R. G. Geier
23. O. H. Greager
24. A. B. Greninger
25. C. T. Groswith
26. K. M. Harmon
27. M. K. Harmon
28. W. M. Harty
29. T. W. Hauff
30. O. F. Hill
31. F. A. Hollenbach
32. H. H. Hopkins
33-35. E. R. Irish
36. R. T. Jessen
37. W. E. Johnson
38. A. R. Keene
39. L. M. Knights
40. F. J. Leitz
41. W. K. MacCready
42. J. E. Maider
43. W. A. McAdams - A.J. Stevens
44. F. K. McCune, G.E.-A.P.D.
45. J. S. McMahon - G.C. Gabler
46. W. M. Mobley
47-48. G. C. Oberg
49. W. J. Ozeroff
50. H. M. Parker
51. A. M. Platt
52. C. A. Priode
53. T. Prudich
54-55. W. H. Reas
56. R. B. Richards
57-59. G. Sege
60. H. P. Shaw
61. R. J. Sloat
62. O. V. Smiset
63. J. M. Smith
64. R. E. Smith
65. R. E. Toczek
66-67. R. E. Tomlinson
68. W. B. Webster
69. F. W. Woodfield
70. W. K. Woods
71. J. B. Work
72. L. L. Zahn
73-78. Extra
79. 300 File
80. Yellow File

[redacted]

CONTENTS

		Page
PART I: INTRODUCTION		101
Chapter I.	Introduction	101
PART II: PROCESS		201
Chapter II.	Irradiated Slugs and Fission-Product Decay	201
Chapter III.	Feed Preparation	301
Chapter IV.	Process Chemistry (Solvent Extraction)	401
Chapter V.	Process Engineering (Solvent Extraction)	501
Chapter VI.	Solvent-Extraction Procedure	601
Chapter VII.	Concentration of Uranium and Plutonium Solutions	701
Chapter VIII.	Aqueous Make-Up	801
Chapter IX.	Solvent Treatment	901
Chapter X.	Acid Recovery and Waste Disposal	1001
PART III: PLANT AND EQUIPMENT		1101
Chapter XI.	General Description of Plant	1101
Chapter XII.	Pulse Columns	1201
Chapter XIII.	Other Process Equipment	1301
Chapter XIV.	Pumps, Jets, and Agitators	1401
Chapter XV.	Remote Operation and Maintenance	1501
Chapter XVI.	Construction Materials and Protective Coatings	1601
PART IV: PROCESS CONTROL		1701
Chapter XVII.	Instrumentation	1701
Chapter XVIII.	Sampling and Analytical Methods	1801
PART V: SAFETY		1901
Chapter XIX.	Health Protection from Radiations	1901
Chapter XX.	Radiation Intensities and Shielding	2001
Chapter XXI.	Decontamination of Surfaces	2101
Chapter XXII.	Hazards Other Than Radiation	2201
Chapter XXIII.	Critical Mass Control	2301
INDEX		2401

PART I: INTRODUCTION

CHAPTER I. INTRODUCTION

CONTENTS Page

A. PURPOSE, SCOPE, AND ARRANGEMENT OF THE MANUAL 102

B. FUNCTION OF THE PLANT 103

1. Design Basis 103
2. Feed Material 104
3. Plutonium Product 105
4. Uranium Product 106

C. PRINCIPLES AND OUTLINE OF THE PUREX PROCESS 108

1. Basic Principles 108
2. Feed Preparation 111
3. Solvent-Extraction 111
4. Solvent Treatment 114
5. Acid Recovery and Waste Disposal 114
6. Alternate Flowsheets 115
7. Major Differences Between the Purex and Redox Processes . 117
8. Off-Standard Streams 118

D. THE PUREX PLANT 118

1. General Plant Layout 118
2. Special Features of the Plant 120
3. Chemical and Utility Requirements 123
4. In-Process Inventory 123

REFERENCES 124

LIST OF TABLES AND FIGURES 125

CHAPTER I. INTRODUCTION

A. PURPOSE, SCOPE, AND ARRANGEMENT OF THE MANUAL

1. Purpose and Scope

The Purex Technical Manual has been prepared to provide a documentation of the technical bases and general physical features of the Purex facilities at the Hanford Atomic Products Operation. The manual is intended for use as a means for training and educating personnel unfamiliar with the process and as a reference handbook for the use of personnel responsible for the process employed and the operation of the Plant.

The material contained in this manual was assembled by members of the Chemical Development Sub-Section, Separations Technology Section, between January 1954 and March 1955.

2. Arrangement

The manual is divided into five parts as follows:

Part	Title
I	Introduction
II	Process
III	Plant and Equipment
IV	Process Control
V	Safety

Part I contains a summary of general information about the Plant and process and is written to provide the reader with a synoptic view as an aid in understanding the subsequent parts.

Part II contains a step-by-step description of the process, with supporting process data, a documentation of the technology employed, and brief discussions of the operating procedures as well as some typical remedies for off-standard conditions.

Part III describes the Plant layout, equipment arrangement, and individual equipment pieces.

Part IV describes the instruments and analytical methods used for process control.

Part V describes process hazards and the methods used to safeguard against them.

Each part contains one or more chapters. A total of twenty-three chapters is included in the five parts. Pages are numbered to designate the chapter number (i.e., Chapter I page numbers begin with 101, Chapter II with 201, etc.). Figures and tables are located at the end of each chapter and are numbered in separate series for each chapter (e.g., Table I-1, Table I-2,.....; Figure I-1, Figure I-2, etc.). References to documents containing more detailed information are listed at the end of each chapter, just before the figures and tables.

A table of contents is listed on the first page of each chapter. A subject index, in alphabetical order, is included in the back of the manual for quick reference to specific points.

B. FUNCTION OF THE PLANT

The function of the Purex Plant is the recovery of plutonium and uranium from uranium slugs irradiated in the Hanford piles. The function involves the separation of plutonium and uranium from each other and from radioactive fission products formed in the slugs. This is accomplished by a solvent-extraction process.

1. Design Basis

The Purex Plant was designed for a nominal processing capacity of from 75 to 200 tons of uranium per month, based on the stream volumes and compositions defined by the Purex Chemical Flowsheet HW #3[4] (shown in Figures I-2, I-3, I-4, and I-5). To allow for reasonable down time, e.g., for maintenance, and for low production rates during periods of start-up, rework, etc., a production efficiency of 80 per cent was assumed, resulting in a maximum instantaneous production rate of 250 tons U/month, or 8.33 tons U/day, as the nominal design basis for equipment and piping.[1] However, to allow for flowsheet flexibility and possible future increases in production rates with a minimum of required alterations to the Plant, spare piping was provided in critical locations and design of major equipment pieces and of piping buried in concrete was generally for rates greater than 8.33 tons/day. For example, spare piping through concrete was provided and inaccessible piping in the radioactively "hot" Pipe Trench was designed with a "capacity factor" of 2.0 ± 0.2; i.e., it was designed for approximately twice the capacity required on an 8.33-ton/day basis. The tabulation below shows instantaneous uranium production rates and resulting sustained processing capacities based on assumed production efficiencies.

Capacity Factor	Instantaneous Production Rate, Short Tons U/Day	Average, or Sustained Processing Capacity, Short Tons U/Month	
		70% Efficiency	80% Efficiency
1.00[a]	8.33	175	200
1.20	10	210	240
1.80	15	315	360
2.40	20	420	480
3.00	25	525	600

[redacted] Note: (a) Nominal design basis.

[redacted]

Although designed for a nominal instantaneous rate of 8.33 tons/day, with only very minor equipment changes (expected to be effected prior to Plant start-up) the Purex Plant should be capable of instantaneous processing rates as high as 12 to 13 tons of uranium per day, when operating at Purex HW #3 Flowsheet conditions.(5) Potential higher processing rates employing HW #4 Flowsheet are discussed below under Subsection C6 of this chapter.

Purex-Plant plutonium processing rates are dependent on the uranium rates and on the Pu concentration in the irradiated slugs. The Pu concentration depends on irradiation history of the slugs. Plutonium processing rates at assumed values of pile irradiation level (megawatt-days/ton of uranium) and corresponding to a uranium processing rate of 10 tons U/day are tabulated below. Data shown are for the K Piles; for the older piles the corresponding Pu rates would be about 5% lower, due to the lower efficiency of conversion to plutonium in the old piles.

Irradiation Level, MWD/Ton U	Kg. Pu Processed/Day at 10 Tons U/Day
200	1.85
600	5.1
950	7.5

Process design criteria specify 98% recovery of uranium and plutonium in the Purex Plant. However, on the basis of the HW #3 Flowsheet, recoveries of 98.75% are predicted, with recoveries greater than 99% considered probable after Plant shakedown is complete.

2. Feed Material

The feed to the Purex Plant consists of irradiated uranium slugs from the Hanford piles. The slugs are uranium cylinders about 8 inches long by 1.36 inches in diameter, encased in thin aluminum jackets or "cans". Between discharge from the piles and entry into the Purex Plant, these slugs are stored for approximately 90 days to permit "cooling", i.e., radioactive decay of fission products. As received in the Purex Plant, the irradiated slugs have a plutonium content of from 200 to 850 grams per short ton of uranium depending on the number of megawatt-days of pile irradiation received by the slugs. The beta radioactivity due to fission products in the slugs is 0.1 to 0.6 (theoretical) curie per gram of uranium, and the gamma radioactivity is 0.07 to 0.5 curie per gram. The exact specific radioactivity of the slugs is a function of their irradiation and "cooling" history. The specific beta and gamma radioactivities of slugs irradiated to 200 megawatt-days per ton (MWD/T), at 5 megawatts per ton (MW/T), and then "cooled" for 90 days are, respectively, 0.28 and 0.17 (theoretical, or absolute) curie per gram of uranium. The slugs are described and discussed in greater detail in Chapter II.

3. Plutonium Product

The final plutonium product of the Purex Plant is a plutonium nitrate solution containing approximately 75 grams of plutonium per liter and 275 grams per liter of free nitric acid (on the basis of the HW #3 Flowsheet). The maximum allowable uranium and radioactive fission-product concentrations are as follows:

Uranium	0.1 weight per cent of the Pu metal*
Beta plus gamma radioactivity from fission products	8×10^{-5} absolute curies/g. of Pu

Under normal operating conditions, the beta radioactivity of the Purex-Plant plutonium product should be negligible compared to the gamma activity.

Previous H.A.P.O. experience with a Purex-type product (i.e., one with negligible beta activity) has led to a restatement of the above product activity specification, more convenient for Plant process-control purposes, directly in the units of laboratory-reported radiochemical analyses of the gamma and plutonium activity of a product sample:

$$\frac{(\text{gamma microcuries/gal.}) \times 10^9}{\text{alpha counts/(minute)(gal.)}} \leq 1$$

in which gamma microcuries/gal. are determined on a gamma scintillation counter (GSC) and represent a close approximation to absolute microcuries/gal. Alpha counts/(min.)(gal.) are determined on an Alpha Simpson Proportional counter (ASP) and is an expression of the sample plutonium content.

The above expression may be illustrated for a typical Purex-Plant plutonium product solution which has been recovered from uranium irradiated to 600 MWD/T, and contains 75 g. Pu/l. and the specification limit of gamma activity from fission products, namely 8×10^{-5} gamma curies/g. of Pu. In units normally reported by the Hanford control laboratories, this product solution would assay approximately 22,700 microcuries/gal., and 2.2×10^{13} alpha counts**/(min.)(gal.). Therefore, the ratio of gamma

---

*) Assuming no additional uranium decontamination in subsequent processing steps during plutonium metal fabrication. In practice an additional D.F. of the order of 10 to 20 is realized, so that up to 2% uranium contamination (Pu-metal basis) in the Purex-Plant product may be tolerable.

**) The number of plutonium alpha counts/(min.)(gal.) for a solution of 75 g./l. plutonium may vary as much as ± 10 per cent from the above value depending on the MWD/T pile exposure level and, to lesser extents, on the neutron flux and neutron temperature which are obtained in the pile. These effects are discussed further in Chapter II.

microcuries to alpha counts/min. on a unit volume (gallon) basis would be

$$\frac{2.27 \times 10^{4}}{2.20 \times 10^{13}} = 1.03 \times 10^{-9}$$

which may be conveniently rounded off and re-arranged to give the specification stated above. This specification is also colloquially expressed as "Gamma/AT" $\leqq 1$, where "AT" designates "alpha total" (specific activity).

The concentration of non-radioactive impurities in the plutonium product is expected to be on the order of 1 weight per cent. The chief impurities result from the corrosion of stainless steel during concentration of the plutonium nitrate solution, and consist of iron, chromium, and nickel.

4. Uranium Product

The uranium product of the Purex Plant is a concentrated uranyl nitrate solution containing approximately 1000 grams of uranyl nitrate hexahydrate (UNH) per liter (nominal 60% UNH), i.e., 475 g. U/l. The nitric acid content is about 0.25 molar (16 g. HNO_3/l.). This uranium product solution is shipped to 224-U Building in the 200-West Area for denitration by calcination to UO_3, the latter being the recovered uranium product shipped off-site from Hanford.

Inter-area shipping specifications for Purex-Plant UNH going to 224-U Building have significance only in avoiding hazardous conditions in 224-U Building, and in meeting the off-site shipping specifications for the UO_3. The uranium trioxide (UO_3) produced by calcining uranyl nitrate solution from the Purex Plant is shipped in 30-gallon drums having a net weight of about 840 pounds. For purposes of specification, eight drums constitute a lot, and twelve lots equal a carload. Specifications for uranium trioxide are as follows:(3)

Constituent or Property	Specification	Specification Basis
Gamma activity due to fission products	100% of gamma activity of aged natural uranium	10-carload average
	300% of gamma activity of aged natural uranium	Maximum activity for 1 carload out of 10
Beta activity due to fission products	100% beta activity of aged natural uranium	Each carload
Plutonium	≤10 p.p.b. of U	Each carload
UO_3 content	≥ 97%	Each lot
Volatile impurities (max.)[a]:		
P	100 p.p.m. of U	Each carload
Si	100 p.p.m. of U	Each carload
S	100 p.p.m. of U	Each carload
Mo	100 p.p.m. of U	Each carload
Total metallic impurities (T.M.I., sum of Na, Ca, Mo, Al, Cr, Ni, Fe)	250 p.p.m. of U (av.) 350 p.p.m. (max.) 500 p.p.m. (max.)	10-carload average Maximum carload av. Maximum for lots within a carload
Screen size	% through 80 mesh ≥ 80	Each carload
	% through 40 mesh ≥ 98	Each carload

Note: (a) Volatile during subsequent processing steps conducted at other sites.

Although they are not a part of the UO_3 specifications, analytical measurements are also made and reported, on the basis of composite samples from each carload, for:

(a) Reactivity (UO_3 to UF_4 conversion).
(b) Density.
(c) U-235 content.

In terms of a Purex-Plant uranium product for inter-area shipment, the following approximate specifications should be met:

Pu	$\leqq$ 10 parts per billion parts of uranium
Gamma activity due to fission-products	$\leqq$ 200% of aged natural uranium
Beta activity due to fission-products	$\leqq$ 200% of aged natural uarnium
Total metallic impurities (T.M.I.)	$\leqq$ 200 parts per million parts of uranium

Note: The fission-product specification for inter-area shipment is dependent upon the individual fission products present in the uranium product. If, as is expected, Ru constitutes a substantial fraction of the activity, it is permissible to exceed the final UO_3 specification since Ru is largely volatilized in the calcination of uranyl nitrate to the oxide.

C. PRINCIPLES AND OUTLINE OF THE PUREX PROCESS

The Purex process is designed to separate uranium and plutonium from each other and from the fission products with which they are associated in irradiated slugs. The process is one of solvent extraction, in which the components are separated from one another by controlling their relative phase distribution between aqueous solutions and an immiscible organic solvent, tributyl phosphate dissolved in a hydrocarbon diluent. In the following subsections the basic principles of the process are briefly described and the several steps which make up the process are outlined. This section is intended only as an introduction to the process, more complete information being contained in Part II (Chapters II through X).

1. Basic Principles

1.1 Properties of uranium of process importance

The Purex process utilizes the preferential extractability of uranyl nitrate by tributyl phosphate to separate uranium from plutonium and the fission-product elements.

Metallic uranium is soluble in nitric acid to form an aqueous solution of $UO_2(NO_3)_2.XH_2O$. A rapid dissolution rate of the metal in nitric acid is favored by a high concentration of acid, and elevated temperature.

The salts of uranium consist chiefly of two classes: (a) the uranous, U(IV), green in color; and (b) the uranyl, UO_2^{+2}, yellow in color with a strong greenish fluorescence. Uranium is capable of existing in other valence states, but only these tetravalent and hexavalent forms are comparatively stable in aqueous solutions. U(IV) is a strong reducing agent, and is not normally present in Purex process solutions since it is difficult to reduce UO_2^{+2} to U(IV). $UO_2(NO_3)_2$, the product of uranium metal dissolution in nitric acid, is very soluble in aqueous solutions and in tributyl phosphate. When aqueous solutions of uranyl nitrate are contacted with tributyl phosphate, the uranium will distribute preferentially into the organic phase if sufficient nitric acid is present, as a salting agent, in the aqueous phase. The uranium forms a complex compound ($UO_2(NO_3)_2.(TBP)_2$) in the organic phase of tributyl phosphate (TBP) and hydrocarbon. Advantage is taken of this preferential distribution and the relative non-reducibility of UO_2^{+2} in accomplishing the separation of uranium from plutonium and fission products in the Purex process.

1.2 Properties of plutonium of process importance

The Purex process utilizes the preferential extractability of the plutonium (IV) and (VI) nitrates by tributyl phosphate and the virtual non-extractability of plutonium (III) nitrate to separate plutonium from uranium and the associated fission products.

The dissolution of irradiated uranium slugs in nitric acid results in a solution in which the plutonium is chiefly in the (IV) valence state.

Solutions of trivalent (blue-violet), tetravalent (brown-green), pentavalent (colorless), and hexavalent (pink-orange) plutonium have been produced. Pu(V) is unstable, and soon disappears by disproportionation to other valence states. Pu(III) is more stable than Pu(V) but in the presence of mild oxidants is converted to Pu(IV). Both Pu(IV) and (VI) nitrates can be made to distribute preferentially from an aqueous solution salted with nitric acid into tributyl phosphate in the same manner as $UO_2(NO_3)_2$, while the Pu(III) nitrate always favors the aqueous phase. Pu(IV) and Pu(VI) form complex compounds in solution with two molecules of tributyl phosphate. Pu(VI) acts as the plutonyl ion, PuO_2^{+2}, and forms a complex with two molecules of tributyl phosphate similar to that formed by uranium. The solvent-extractability of the IV and VI valence states makes possible the separation of plutonium from the fission products while the relatively easy reduction of plutonium to the virtually non-extractable III valence state makes possible the separation of plutonium and uranium in the Purex process.

1.3 Properties of the fission products of process importance

The relative non-extractability of the fission-product elements by tributyl phosphate makes possible their separation from uranium and plutonium.

Fission-product elements important in Plant operation are listed in Chapter II. A few of these fission products such as xenon and krypton are gaseous and are largely evolved in the dissolution of the pile metal.

The fission products remaining in the metal solution are, in general, relatively inextractable into tributyl phosphate, even when the aqueous phase contains a salting agent, and thus largely remain in the aqueous phase at the conditions under which plutonium and uranium are extracted.

Three particularly troublesome fission products in the Purex process are ruthenium, zirconium, and niobium. Iodine may be troublesome, since it raises the activity of the organic solvent, if feed material aged less than ninety days is processed. If uranium solution containing niobium and/or zirconium is passed through silica gel, the niobium and/or zirconium are adsorbed from the solution. Space is available at the Purex-Plant site for future installation of silica-gel beds if they are required.

1.4 Decontamination

As indicated on the HW #3 Purex Chemical Flowsheets (Fig. I-2, I-3, I-4, and I-5 located at the end of this chapter), the gamma-emitting fission products associated with irradiated uranium slugs are reduced by factors of 6.9×10^6 for uranium and 1×10^7 for plutonium in the Purex process. The factor by which the concentration of radioactive contaminants is reduced is termed the "decontamination factor" (D.F.), which can be expressed mathematically as follows:

$$\text{D.F.} = \frac{\text{Radioactivity initially present}}{\text{Radioactivity present at step in question}}$$

Either the beta or gamma radiations may be used as an index of the fission-product radioactivity present, and the decontamination thus determined is called the "beta D.F." or "gamma D.F." A logarithmic method of expressing decontamination factors is also used, and is expressed as follows:

$$\text{dF} = \log_{10}(\text{D.F.})$$

Therefore a D.F. of 10^5 is equivalent to a dF of 5; D.F. of 20 equals dF of 1.3, etc.

1.5 Simplified flowsheet

Figure I-1 is a simplified flowsheet of the Purex process including the feed preparation, solvent extraction, solvent treatment, and nitric acid recovery steps. Individual parts of the process are discussed in the following subsections.

This flowsheet shows the code letters usually used to identify the main process streams in the Purex process. Fox example, the HAF stream is the uranium-plutonium feed stream to the HA Column, the first solvent-extraction column in the process. The first two letters of this code identify the equipment piece, the HA Column in the above example. The last letter (or two-letter group) identifies the stream. Influent stream abbreviations end in F, X, S, or IS, which stand for "feed" (uranium or plutonium),

"extractant", "scrub", and "intermediate scrub", respectively. Effluent stream abbreviations end in P, U, W, D, or C, which stand for plutonium, uranium, waste, distillate, and concentrate, respectively. Effluent streams containing both uranium and plutonium end only in P. Thus the HAP is the effluent stream from the HA Column containing both uranium and plutonium.

2. Feed Preparation

The purpose of the feed preparation process is to prepare a solution from the pile-irradiated slugs which is suitable as a feed to the solvent-extraction battery. In following the discussion of this process step, below, reference is made to the Simplified Flowsheet, Figure I-1, or to a more detailed chemical flowsheet on Figure I-2.

The feed preparation process includes the following steps:

(a) The aluminum jackets are removed from the irradiated slugs by a solution containing 10 wt.% sodium hydroxide and 20 wt.% sodium nitrate, at boiling temperature. The resultant coating removal waste is sent to underground storage tanks. A recently developed method of removing aluminum jackets which employs nitric acid with a mercury catalyst could replace the caustic removal method at some future date.

(b) The uranium slugs, containing plutonium and fission products, are then dissolved in approximately 50% nitric acid at boiling temperature. The off-gas from the dissolver vessel is passed through a "silver reactor" where by interaction with silver nitrate, the highly radioactive iodine is effectively removed.

(c) The metal solution from the dissolving step is centrifuged to remove any solid material which may be detrimental to the performance of the solvent-extraction columns.

(d) The final adjustment of the metal solution to a proper composition as a feed to the first solvent-extraction column (the HA Column) is made by the addition of water and nitric acid. Sodium nitrite may also be added to adjust the plutonium valence state to + IV prior to solvent extraction.

3. Solvent Extraction

The portion of the Purex process which is concerned with solvent extraction employing Purex Chemical Flowsheet HW #3 is shown in Figures I-2 and I-3 at the end of the chapter.

Pulse columns, which are employed as the solvent-extraction contactors in the Purex Plant were developed at Hanford, and are shorter and more efficient than the standard packed or spray columns. Chapter XII contains a description of the columns, and Chapter V discusses their salient design features and performance characteristics.

3.1 Co-Decontamination Cycle

The first solvent-extraction cycle in the process, called the Co-Decontamination Cycle, accomplishes the primary separation of the "hot" feed solution into a first-cycle aqueous product stream containing the uranium and plutonium, and a first-cycle aqueous waste stream containing the bulk of the fission-product elements.

The feed solution from the feed preparation section (HAF) is continuously fed to the intermediate feed point of the HA Column. This feed contains uranium, plutonium, fission products, and nitric acid salting agent. A countercurrent flow of tributyl phosphate in a hydrocarbon diluent (HAX) rises through the aqueous phase in the column and extracts the uranium and plutonium essentially quantitatively into the solvent phase but leaves the radioactive fission products essentially quantitatively in the aqueous phase. Aqueous scrub streams (HAS and HAIS) introduced at or near the top of the column, further decontaminate the uranium and plutonium by washing fission products back from the solvent phase to the aqueous phase. Uranium is in the VI valence state and plutonium is chiefly in the IV valence state in the HA Column.

The organic stream containing the uranium and plutonium overflows directly to the bottom of the HC Column, where a countercurrent flow of aqueous strip solution (HCX) transfers the uranium and plutonium back into an aqueous phase. The aqueous effluent (HCP) containing the uranium and plutonium is then steam stripped of residual dissolved and entrained organic phase and concentrated in the HCP Concentrator. Final chemical adjustment (primarily HNO_3 addition) provides a suitable feed solution for the Partition Cycle.

3.2 Partition Cycle

The Partition Cycle further decontaminates uranium and plutonium from residual radioactive fission products, and in addition separates the uranium and plutonium from one another.

The aqueous uranium-plutonium solution from the Co-Decontamination Cycle, after concentration and feed adjustment, is fed as the IAF (feed) stream to the intermediate feed point of the IA Column. The IA Column is operated as a decontamination column in a manner analogous to that described above for the HA Column. The feed stream is contacted with a countercurrent flow of tributyl phosphate in a hydrocarbon diluent (IAX) and scrubbed with an aqueous solution of nitric acid (IAS). The uranium and plutonium transfer into the organic phase and are carried overhead while the fission-product elements leave the bottom of the column in an aqueous waste stream (IAW).

The organic overhead from the IA Column (IAP) containing uranium and plutonium is combined with the organic effluent from the IB Scrub Column (IBSU) and routed to the IB Extraction Column where it is contacted with a countercurrent flow of slightly acidified ferrous sulfamate solution (IBX). Ferrous sulfamate reduces the plutonium to the III valence state, thus permitting it to be extracted into the aqueous phase while uranium continues to favor the organic phase. The aqueous effluent from the IBX Column containing the bulk of the plutonium is fed to the IBS Column, where the small amount of uranium present in the plutonium solution is scrubbed out by contacting with TBP and hydrocarbon diluent (IBS). The aqueous plutonium stream (IBP) which leaves the bottom of the IB Scrub Column is further decontaminated in the Final Plutonium Decontamination Cycle.

The uranium in the organic stream from the IB Extraction Column (IBU) becomes the feed to the IC Column (ICF). The uranium is transferred into the aqueous phase in the IC Column by countercurrent extraction with an aqueous phase. The aqueous effluent (ICU) is then steam-stripped of residual organic phase and concentrated in the ICU Concentrator. This concentrated uranium stream, after chemical adjustment, constitutes the feed to the Final Uranium Decontamination Cycle.

3.3 Final Uranium Decontamination Cycle

The Final Uranium Decontamination Cycle completes the decontamination of uranium from residual traces of radioactive fission products and plutonium which carry over with uranium from the Partition Cycle.

Operation of the Final Uranium Decontamination Cycle is analogous to that described above for the Co-Decontamination Cycle except for flowsheet modifications employed to remove trace amounts of plutonium from the uranium. The aqueous scrub stream (2DS) contains ferrous sulfamate which reduces any trace of plutonium to the III valence state, thus allowing it to be discarded with residual fission products in the aqueous waste stream (2DW). The uranium is stripped from the organic phase back into the aqueous phase in the 2E Column. The uranium product from the 2E Column, after steam stripping and concentration, is shipped to the Uranium Conversion Plant (224-U) for calcination to uranium trioxide (UO_3) before shipping off-site.

3.4 Final Plutonium Decontamination Cycle

The Final Plutonium Decontamination Cycle completes the decontamination of the plutonium. The aqueous effluent from the IB Scrub Column (IBP) contains plutonium in the III valence state. This plutonium is oxidized to the IV valence state in the cross-over oxidizer (2AF Tank) by the addition of nitric acid and sodium nitrite. The oxidized solution (2AF) is fed to the center feed point of the 2A Column. In the bottom section of the column the plutonium is extracted into a TBP-hydrocarbon organic solution (2AX). In the upper portion of the column the organic stream is contacted with nitric acid solution (2AS) which is fed to the top of the column to scrub fission products from the plutonium. The organic solution then cascades to the bottom of the 2B Column, where the plutonium is transferred back into the aqueous phase by countercurrent extraction with an aqueous strip solution (2BX).

Plutonium in the effluent stream (2BP) enters a continuous evaporator. The product of the evaporator, containing essentially only nitric acid and plutonium (50 to 75 g. Pu/l.), is then shipped to the plutonium processing building (234-5).

An alternative method of operation of the 2A and 2B Columns, shown in Figure I-5 and discussed in Chapter IV, involves return of a large fraction of the 2B Column aqueous product to the top of the 2A Column as reflux. The "reflux" procedure results in a 2BP stream containing about 55 g. Pu/l., obviating the need for evaporation.

4. Solvent Treatment

The solvent treatment section of the Plant reclaims the combined tributyl phosphate and hydrocarbon diluent for recycle to the process. Two separate solvent-treatment systems are employed: one processes the solvent from the Final Uranium Decontamination Cycle; the other processes the solvent from the rest of the solvent-extraction cycles. Details are shown in Figure I-4.

The used solvent from the HC and IC Columns enters the IO Column where it is contacted with a dilute sodium carbonate solution to remove uranium, plutonium, fission products, and decomposition products of tributyl phosphate. The treated organic phase from the column is then fed to a centrifuge for removal of trace quantities of solids and entrained aqueous phase. Following centrifugation the solvent is collected and is normally returned to the process for reuse as extractant. However, sufficient solvent tankage is provided to permit further batch treatment of the organic stream with various wash solutions if it is required. Addition of make-up tributyl phosphate and/or hydrocarbon may be accomplished in the collection and batch treatment facilities.

The second, or "cold", solvent system receives solvent from the 2E Column. Treatment is similar to that described above for the first solvent system. Sodium carbonate wash solution from the "cold" solvent treatment is periodically backcycled to the "hotter" treatment facilities for reuse.

5. Acid Recovery and Waste Disposal

Treatment of the principal aqueous process wastes from the Purex Plant includes:

(a) Volume reduction by evaporation of highly radioactive streams containing nitric acid, with simultaneous recovery of the acid and subsequent neutralization of the "hot" concentrate.

(b) Storage of the neutralized waste concentrate, which contains nearly all of the fission-product activity originally associated with the uranium slugs, and certain "hot" waste streams, which by-pass the acid concentration system, in mild-steel-lined underground storage tanks. Included in the latter category are the alkaline wastes resulting from slug coating removal which, because of their high concentration of dissolved solids and relatively low concentration of fission products, may be stored separately in order to facilitate disposal by some other method at a future date.

(c) Disposal of aqueous wastes containing only slight amounts of radioactivity (e.g., distillates from the uranium concentrators) in waste caverns (similar in principle to the formerly-used "cribs"), whence they percolate into the ground.

Certain caustic-free wastes which are not considered to be process streams but which are potentially "hot" (e.g., sump and laboratory wastes) may be treated in the concentration and acid recovery equipment.

A chemical flowsheet of the concentration and acid recovery process is shown in Figure I-4 (HW #3 Flowsheet). Two concentrators are included in order that the distillate from wastes containing the bulk of the fission products (viz., the HAW) can be re-evaporated for more complete fission-product cleanup. Thus, the feed for the No. 1 Acid Concentrator includes the HAW plus the bottoms from the No. 2 Acid Concentrator, while the feed for the No. 2 Acid Concentrator includes the other wastes (e.g., the IAW and 2DW) plus the overheads from the No. 1 Concentrator. The combined waste concentrate is routed from the No. 1 Acid Concentrator via the Neutralizer to the underground storage tanks. The final overhead product from the No. 2 Concentrator is further concentrated with respect to nitric acid and decontaminated from fission products by absorption and/or fractionation. The original Purex-Plant design provided for fractionation only in an atmospheric-pressure fractionator. However, in order to lessen the likelihood of equipment failure by acid corrosion, the design at the time of this writing included a vacuum acid fractionator, to be installed after Plant start-up, and utilization of the original fractionator as an absorber. Of the total acid required by the Purex Plant, approximately 65 per cent is supplied by the acid recovery system.

Further volume reduction of the neutralized waste concentrate may be accomplished in the underground tanks by utilization of the heat resulting from radioactive fission-product decay. On the basis of the volume of waste routed from the Neutralizer (see Figure I-4), a further volume reduction by a factor of from 3 to as much as 5 may be effected by this self-concentration.

6. Alternate Flowsheets

The Purex Chemical Flowsheet HW #3, shown by Figures I-2 through I-4, is the basis for the processing steps described above and for the design of the Purex Plant, as discussed in Subsection B1. Its development resulted from improvement of earlier H.A.P.O. flowsheets (HW #1 and #2). Other flowsheets for the Purex process or a Purex-type process have also been studied, principal alternates including the following:

(a) "Low-acid" flowsheets, designed to reduce nitric acid consumption by flowsheet changes rather than by acid recovery, were investigated in pilot-plant studies at the Knolls Atomic Power Laboratory (K.A.P.L.) and are described in Chapter V (Section F).

(b) Halex-process flowsheets, studied on a pilot-plant scale at the Argonne National Laboratory (A.N.L.), are similar to Purex flowsheets except that the diluent for TBP is carbon tetrachloride, rather than a kerosene-type hydrocarbon. This flowsheet is also described in Section F of Chapter V.

(c) The Purex HW #4 Flowsheet,(6) discussed below, resulted from a study to determine HW #3 Flowsheet modifications which could be made to increase the processing capacity of the Purex Plant.

The Purex HW #4 Flowsheet, illustrated by Figures I-6 through I-9, includes process modifications which, if successfully exploited along with relatively minor equipment changes, would potentially increase the Purex-Plant instantaneous processing capacity to 25 tons U/day. These flowsheet modifications, the full development of which was incomplete at the time of this writing, are summarized briefly below:

(a) Increase of the C-type column extractant temperatures to approximately 60°C. and reduction of their flows to approximately 60 to 70 per cent of the HW #3 values. This results in an approximately 40 to 50 per cent capacity increase for the existing uranium concentrators.

(b) Increase of the uranium concentration in the feed to the A-type columns from 1.35 to 1.5 M UNH to reduce aqueous waste volumes.

(c) An approximately 60% reduction in the scrub flow rate to the IBS Column to stabilize the operation of this column at higher processing rates.

(d) A 65% reduction in the 2B Column extractant flow to reduce the load on plutonium concentration equipment.

(e) Back-cycle of the acid-containing bottoms from the No. 2 Acid Concentrator to the Dissolvers for use in feed make-up for the HA Column.

(f) Reduction of the organic extractant flow rates to the IA, 2D, and 2A Columns by 10, 10, and 30 per cent, respectively, to improve column decontamination factors and to decrease organic flow in the Plant.

Examples of equipment modifications required along with the above flowsheet changes to attain instantaneous processing rates approaching 25 tons of uranium per day in the Purex Plant are (a) changing of the cartridges in two solvent-extraction pulse columns (IBX and IO Columns), and (b) increasing the capacity of approximately 100 assorted rotameters, control valves, orifice plates, etc. As of the time of this writing a program was underway to accomplish some or all of these indicated equipment changes prior to Plant startup.

7. Major Differences between the Purex and Redox Processes

The major process differences between Purex and Redox are stated in the brief summary below:

(a) Salting agent: Nitric acid is used as a salting agent in the Purex process in place of aluminum nitrate in the Redox process. Nitric acid is volatile and may be purified and recovered by distillation. The recovery of aluminum nitrate (e.g., by crystallization) is unattractive economically. The use and recovery of nitric acid as the salting agent results in smaller ultimate waste volumes to be stored from the Purex process.

(b) Solvent: Tributyl phosphate diluted with a hydrocarbon diluent is used as the solvent in the Purex process in place of hexone in the Redox process. The hydrocarbon diluent which is a refined fraction resembling kerosene has a flash point in excess of 140°F. Hexone has a flash point of 81°F. (Tag open cup), and its use requires special precautions in the Redox Plant such as inert-gas blanketing of vessels, and the use of explosion-proof motors, and other electrical equipment. Thus, although the solvent in the Purex process is flammable, its higher flash point makes it inherently safer and simpler to handle than the solvent for the Redox process.

(c) Head-end treatment: The Redox Plant incorporates a head-end step which consists of an oxidation step with potassium permanganate in order to remove ruthenium. It is not planned to employ a ruthenium volatilization head-end step in the Purex Plant, and hence the Plant is not provided with a ruthenium scrubber in the off-gas system from the feed preparation equipment. However, a precipitation or scavenger-type head-end step could be accomplished in the Purex Plant by employing the feed preparation vessels and the two feed centrifuges. Provisions are also made in the Purex Plant which permit routing of dissolver solution to an outside facility which could be constructed in the future for any desired head-end treatment.

(d) Contactors: Pulse columns serve as the solvent-extraction contactors in the Purex Plant, while packed columns are used in the Redox Plant. The shorter pulse columns (typical length 33 ft.) are installed in conventional-type cells, while the longer packed columns require a special "silo" design in the present Redox Plant.

(e) Dissolvers: The dissolvers in the Purex Plant are equipped with downdraft condensers whose function is to recover a large fraction of the nitrogen oxides evolved during dissolution of the uranium. The nitrogen oxides are converted to nitric acid in the condenser and returned to the dissolver. Per ton of uranium dissolved, the Purex dissolvers therefore require only about sixty per cent as much acid for dissolution as the dissolvers presently used in the Redox Plant.

8. Off-Standard Streams

Provisions have been made in the process design for reworking any off-standard streams. Rework methods are necessary for either of two possible reasons: (a) a waste stream may contain an excessive amount of uranium and/or plutonium, or (b) a product stream may not be sufficiently decontaminated from fission products or other impurities.

Aqueous waste streams requiring rework are handled in the Waste Rework Tank from which they are routed to the Dissolvers or the Centrifuge Feed Tank for reprocessing. Organic waste streams are scrubbed in either the 1C or 2C Organic Treatment Columns. If the aqueous effluent from these columns contains excessive amounts of uranium or plutonium, the stream is routed through the 1TO Wash Collection Tank to the Waste Neutralizer and then to the Waste Rework Tank where its treatment is similar to that for the aqueous wastes described above.

Insufficiently decontaminated uranium is recycled to the beginning of the process, and, depending upon process needs, may be sent to the HA, IA, or 2D Column for rework.

An off-standard plutonium stream is recycled to the HAF Make-Up Tank for chemical adjustment and from there it passes to the HA Column.

D. THE PUREX PLANT

The Purex Plant is located in the 200 East Area of the Hanford Atomic Products Operation, approximately twenty-five miles from Richland, Washington. A layout sketch of the Hanford Atomic Products Operation is shown in Chapter XI of this manual. Chapters XI through XVI contain detailed descriptions of the Plant and equipment.

1. General Plant Layout

1.1 Purex Area layout

The Purex Area layout is shown in Figure I-10. The main Processing Building (202-A) is discussed under 1.2 below. The analytical laboratory is located within the main building.

The functions of the various facilities in the Purex Area are as follows:

Facility	Function
Processing Building, 202-A	Processing and service functions.
Uranium Storage Tank Farm, 203-A	Storage of decontaminated UNH.
Retention Basin, 207-A*	Retention of exit cooling water and steam condensate before disposal to pond.
Chemical Tank Farm, 211-A	Storage of liquid chemicals ("cold") and demineralized water.
Waste Caverns, 216-A*	Disposal of low-radioactivity wastes to ground.
Underground Storage Tank Farm, 241-A*	Underground storage of high-radioactivity wastes.
Switching Structure, 272-A	Secondary electrical substation
Mock-Up Shop, 272-E*	Fabrication and fitting of precision equipment before placing in 202-A.
"Cold" Solvent Building, 276-A	"Cold" organic treatment.
Fan House and Process Stack, 291-A	Disposal of ventilation air and dilution of Dissolver off-gas.
Area Badge House, 2702-A	Patrol station.

*) Not shown on Figure I-10.

1.2 Processing Building (202-A) layout

The Purex Processing Building, 202-A, is a multistoried, predominantly reinforced concrete structure with over-all dimensions of approximately 118 ft. (width) by 104 ft. (height) by 1005 ft. (length). The total height above grade is 64 ft.

The building, which is shown in simplified layout by Fig. 1-11, has two major portions: the process portion which contains the "hot" equipment with the accompanying regulated work zones (61-1/2 ft. in width), and the service portion which houses personnel and equipment necessary for remote operation of the process portion.

The process portion of the building contains the Canyon cells, Air Tunnel, Pipe Trench, Pipe and Operating Galleries, and a dry chemical storage area. The Canyon cells house the processing equipment for dissolving slugs received from the 100-Area piles (Cells A, B, and C), metal storage (Cell D), preparation of feed solution suitable for the Purex process (Cell E), waste treatment and acid recovery (Cell F), organic treatment (Cell G), and solvent extraction and concentration of uranium and plutonium (Cells H, J, K, and L).

The regulated work zones consist of rooms and galleries where limited contact of personnel with radiation and radioactive contamination is allowed under carefully prescribed and monitored conditions. The following are regulated work zones: Crane Cab Gallery, Canyon, Railroad Tunnel, Hot Shop and Decontamination Cell, Sample Gallery, Regulated Shop, PR corridor, PR cage, PR Vault, 276-A facilities, acid and condensate vault, laboratory, stairwells and elevators between regulated zones, and the fourth level of aqueous make-up (which contains the recovered solvent head tank).

The service portion is comprised of rooms, shops, and equipment required for Plant operation, and includes an entrance lobby, offices, lunch room, toilets, regulated change rooms, and locker rooms. The shops provided are: maintenance, instrument (industrial and electronic), and electrical. Two control rooms are provided. Auxiliary equipment necessary for building operation is located in the compressor room, blower rooms, electrical switchgear room, aqueous make-up galleries, chemical storage gallery, and pipe galleries. A cutaway view of the Purex Building is shown in Figure I-12.

2. Special Features of the Plant

The high levels of radiation associated with process solutions, the nature of the process materials, and the nature of the process itself have necessitated the installation of many special features in the Purex Plant. Some of these special features are discussed briefly below.

2.1 Continuous processing

The Purex Plant is designed to conduct processing operations on a continuous basis, except for the metal dissolving and feed preparation steps. In this respect it is similar to the Redox Plant, but differs from the older batch-operated $BiPO_4$ Plants. The continuous nature of the process requires the use of a great variety and number of automatic control instruments.

2.2 Shielding

All service portions of the Processing Building must be shielded from the processing areas to prevent personnel from receiving excessive amounts of radiation. Concrete walls, frequently of thickness greater than necessary for structural soundness, are used to reduce radiation intensities so that personnel in non-regulated service areas will not receive radiation in excess of 0.1 mr./hr.

Inside the process portions, the regulated work zones are shielded from the Canyon process equipment by concrete walls or cell cover blocks so that radiation levels in these zones are normally less than 1 mr./hr.

Sources of radiation outside of the building (waste piping, waste tanks, and the Railroad Tunnel) are shielded with earth cover and/or concrete.

2.3 Remote operation

Location of the process equipment behind massive concrete shielding necessitates that this equipment be operated by remote control.

All processing operations carried out in the Canyon are controlled from the Operating Gallery except for the Dissolver charging operation which is accomplished with the aid of a Canyon crane. Some of the methods and devices employed for remote operation are briefly described below.

Irradiated uranium slugs are brought into the Processing Building via the Railroad Tunnel on special flatcars (in groups of three cars). The flatcars are positioned underneath the Canyon Master Crane with a special remotely controlled car puller. The buckets containing the slugs are lifted from the car with the Master Crane and dumped into the Dissolvers. Chemical additions to the process vessels are made from the service areas through pipe lines permanently cast into the concrete shielding. Solution transfers between vessels are made by means of steam jets, or by electrically driven deep-well-type pumps which are submerged in the process solutions. Flow rates of these pumped streams are controlled from the operating galleries by recording-controlling instruments. Automatic instruments receive signals indicating the flow rate from a transmitting rotameter and in turn actuate an air-operated valve. Agitation of process solutions is accomplished by remotely operated recirculating steam jets or electrically driven agitators. The organic-aqueous interfaces in the solvent-extraction columns are controlled by recorder-controller instruments which are actuated by air-bubbling dip tubes located in the columns, or by capacitance probes. The controller maintains the desired interface position by adjusting an air-operated valve in an aqueous stream entering or leaving the column. Indications of the total weight and specific gravity of solutions are read from differential-pressure instruments actuated by air-bubbling dip tubes in the vessels. Solutions in Canyon process vessels are sampled via vacuum jets which draw the solutions into shielded sample boxes in the sample gallery.

2.4 Remote maintenance

Installation and removal of process equipment and remote maintenance in the Canyon is accomplished with the aid of cranes. The Master Crane (40-ton) is operated from a steel-shielded control cab which travels behind the concrete shielding wall of the Crane Cab Gallery. Operations are observed from the cab through periscopes, and in addition, two closed-circuit, color, television cameras aid the cab operator in remotely observing the Canyon cells. A "Slave Crane" which is not shielded may be operated from the Master Crane cab.

All Canyon equipment pieces are equipped with lifting bails so that they may be moved into and out of the Canyon cells by means of the cranes. All equipment pieces are fastened in place with enlarged nuts which may be tightened or loosened with a crane-operated impact wrench. Piping, electrical, and auxiliary connections are made with special connectors which may be tightened or loosened by rotating a single nut with the impact wrench.

Canyon equipment in need of repair is transported by a crane to the decontamination cell at the west end of the Canyon. After sufficient decontamination, the equipment piece may be moved to the "Hot Shop" for maintenance. Equipment to be replaced is removed from the Processing Building through the Railroad Tunnel.

2.5 Canyon structure

As noted above, under "Shielding" (D2.2), the interior walls of the Processing Building are constructed of massive concrete for shielding purposes. Some of these walls are as much as six feet thick. The upper section of the east end of the building is constructed of concrete blocks in order to form a "soft" spot in the Canyon. This construction will allow the replacement or addition of another Canyon crane with a minimum of cost and down-time if it is required at some future date. The arched roof of the Processing Building is built of reinforced concrete with a minimum thickness of one foot. The Processing Building is thus blast resistant but will not withstand a direct bomb hit.

2.6 Materials of construction

The corrosive nature of the solutions processed in the Purex Plant requires the use of stainless steel as a construction material for most of the vessels and lines. Types 347 and 304L stainless steel are commonly used throughout the Plant. The columns which operate with a continuous organic phase are packed with fluorothene plates or Raschig rings to improve process performance. The construction materials of the vessels in the service areas are usually stainless or mild steels, depending upon the nature of the solutions which they handle.

The concrete surfaces of the Canyon cells are coated with a protective layer of various types of Amercoat paint to minimize absorption of radioactive solutions. In addition, the PR Room, Pool Cell, Decontamination Storage Cell, and process Cell L have stainless-steel liners.

2.7 Critical mass control

Plutonium is capable of a nuclear fission chain reaction if more than a certain critical amount (called the "critical mass") is accumulated in one place. The amount of plutonium required to form a critical mass is a function of chemical and geometric conditions, as discussed in Chapter XXIII. All portions of the Purex Plant are guarded against a plutonium nuclear reaction either by the presence in the process solution of a neutron absorber (e.g., uranium-238), by plutonium dilution control, by plutonium batch-size control, by "safe-geometry" control, or by combinations of two or more of these safeguards. Definitions and discussions of these nuclear safeguards appear in Chapter XXIII.

2.8 Fire and explosion protection

The Purex process employs a flammable organic hydrocarbon as a diluent for the tributyl phosphate extractant. The high flash point of the diluent-TBP mixture (in the range 150° to 200°F., depending on the hydrocarbon diluent employed) makes it relatively safe from a fire viewpoint.

A number of protective features for the prevention or control of fire have been incorporated into the Purex Plant. Among these are adequate process area ventilation which prevents the accumulation of explosive mixtures, a water-fog fire-control system, and fire detection equipment.

Details on fire and explosion safety of the Plant may be found in Chapter XXII.

2.9 Process area ventilation

In order to minimize the spread of radioactive particles throughout the Plant, process vessels are maintained under a negative differential pressure with respect to the Canyon, while the Canyon in turn is at a lower pressure than the Pipe and Operating Galleries. Thus any air leakage is away from operating personnel toward the "hot" process vessels.

The Process Blower Room supplies humidified air to the Crane Cab Gallery in the upper portion of the Canyon. The air is then drawn downwards to the Canyon deck and enters the cells through slots provided around the edges of each cell cover. The air is exhausted from each cell and from the Pipe Trench through a series of ports into the Air Tunnel. Separate vacuum systems for the Vessel Vent and Condenser Headers also exhaust through a glass-wool filter and a silver reactor into the Air Tunnel. From the Air Tunnel the air is conducted outside of the Processing Building, through a glass-wool filter and into the 291-A ventilation stack.

All of the ventilation air for the non-process areas is supplied from the central service area Blower Room. The air is removed from these areas to the atmosphere by exhaust fans.

The quantity of air supplied to the various zones varies from about 1 to 2 air changes per hour (in the air space above the Canyon deck) to about 11 air changes per hour (in the uranium concentrator cells).

3. Chemical and Utility Requirements

The estimated chemical and waste storage requirements for the Purex Plant on a 1 ton of uranium basis are presented in Table I-1.

4. In-Process Inventory

The continuous nature of the processing operations in the Purex Plant results in the normal holdup of substantial quantities of plutonium and uranium in the process equipment. Table I-2 indicates typical quantities of uranium and plutonium held up in the process when processing uranium slugs exposed to 600 megawatt-days/ton.

REFERENCES

(1) HW-25744 Purex Facility -- Process Design Criteria No. II. J. O. Ludlow, J. M. Frame, and W. B. Webster. 10-14-52.

(2) HW-26584 The Isotopic Content and Specific Activity of Pile-Produced Plutonium. E. M. Kinderman et al. 1-12-53.

(3) HW-30654 Product Specifications -- Uranium Trioxide (Depleted) for Off-Site Shipment. Author not stated. 3-1-54.

(4) HW-31373 Purex Chemical Flowsheet HW #3. R. E. Smith. 4-6-54.

(5) HW-33856 Review of Equipment Capacity Limitations -- Purex Facility. T. V. Lane and L. L. Zahn, Jr. 2-10-55.

(6) HW-35225 Purex Chemical Flowsheet HW #4 -- Increased Purex-Plant Capacity. R. E. Smith. 3-4-55.

LIST OF TABLES AND FIGURES

TABLE I-1	ESTIMATED CHEMICAL AND WASTE STORAGE REQUIREMENTS FOR THE PUREX PLANT
TABLE I-2	ESTIMATED IN-PROCESS INVENTORY OF URANIUM AND PLUTONIUM FOR THE PUREX PLANT
FIGURE I-1	PUREX-PROCESS SIMPLIFIED FLOWSHEET
FIGURE I-2	PUREX CHEMICAL FLOWSHEET HW #3 -- Feed Preparation and Co-Decontamination Cycle
FIGURE I-3	PUREX CHEMICAL FLOWSHEET HW #3 -- Partition Cycle -- Final Uranium Decontamination Cycle -- Final Plutonium Decontamination Cycle
FIGURE I-4	PUREX CHEMICAL FLOWSHEET HW #3 -- Acid Recovery System -- Organic Recovery System
FIGURE I-5	PUREX CHEMICAL FLOWSHEET HW #3 -- Alternative Plutonium Decontamination Cycle
FIGURE I-6	PUREX CHEMICAL FLOWSHEET HW #4 -- Feed Preparation and Co-Decontamination Cycle
FIGURE I-7	PUREX CHEMICAL FLOWSHEET HW #4 -- Partition Cycle
FIGURE I-8	PUREX CHEMICAL FLOWSHEET HW #4 -- Final Uranium Decontamination Cycle -- Final Plutonium Decontamination Cycle
FIGURE I-9	PUREX CHEMICAL FLOWSHEET HW #4 -- Acid Recovery System -- Organic Recovery System
FIGURE I-10	SIMPLIFIED PUREX AREA PLOT PLAN
FIGURE I-11	202-A PROCESSING BUILDING -- Simplified Layout
FIGURE I-12	202-A BUILDING -- Perspective Cutaway

TABLE I-1

ESTIMATED CHEMICAL AND WASTE STORAGE REQUIREMENTS FOR THE PUREX PLANT

Basis: HW #3 Flowsheet

Chemical	Consumption, Lb./Ton U
HNO_3:	
Fresh acid plus recovered acid recycle	7000
Fresh acid only	720[a]
NaOH	500
$NaNO_3$	300
$NaNO_2$	42
$Fe(NH_2SO_3)_2$	32
Na_2CO_3	60
TBP	105
Diluent	250

Note: (a) Estimated minimum requirement based on data of Chapter VIII.

Waste	Storage Volume, Gal./Ton U
Neutralized waste:	
Before self-concentration	485
After self-concentration	150[a]
Coating waste	240
Total:	
Before self-concentration	725
After self-concentration	390[a]

Note: (a) Estimates based on the assumption of separate storage of neutralized waste and coating waste.

TABLE I-2

ESTIMATED IN-PROCESS INVENTORY OF URANIUM AND PLUTONIUM FOR THE PUREX PLANT

Bases: HW #3 Flowsheet
Pu enrichment level = 510 g./ton U

Process Section	Lb. of U	G. of Pu
Feed Dissolving and Storage (Dissolver to Feed Centrifuge)	115,000	29,325
Feed Make-Up (Centrifuge to HAF Tank)	21,000	5,355
Co-Decontamination Cycle (HAF Tank through HCP Concentrator)	18,500	4,715
Partition Cycle (IAF Tank through ICU Concentrator)	21,000	2,880
Final Uranium Cycle (2DF Tank through 2EU Sampler)	39,700	
Final Plutonium Cycle (2AF Tank through Product Sampler)		10,600
Total	215,000	52,875

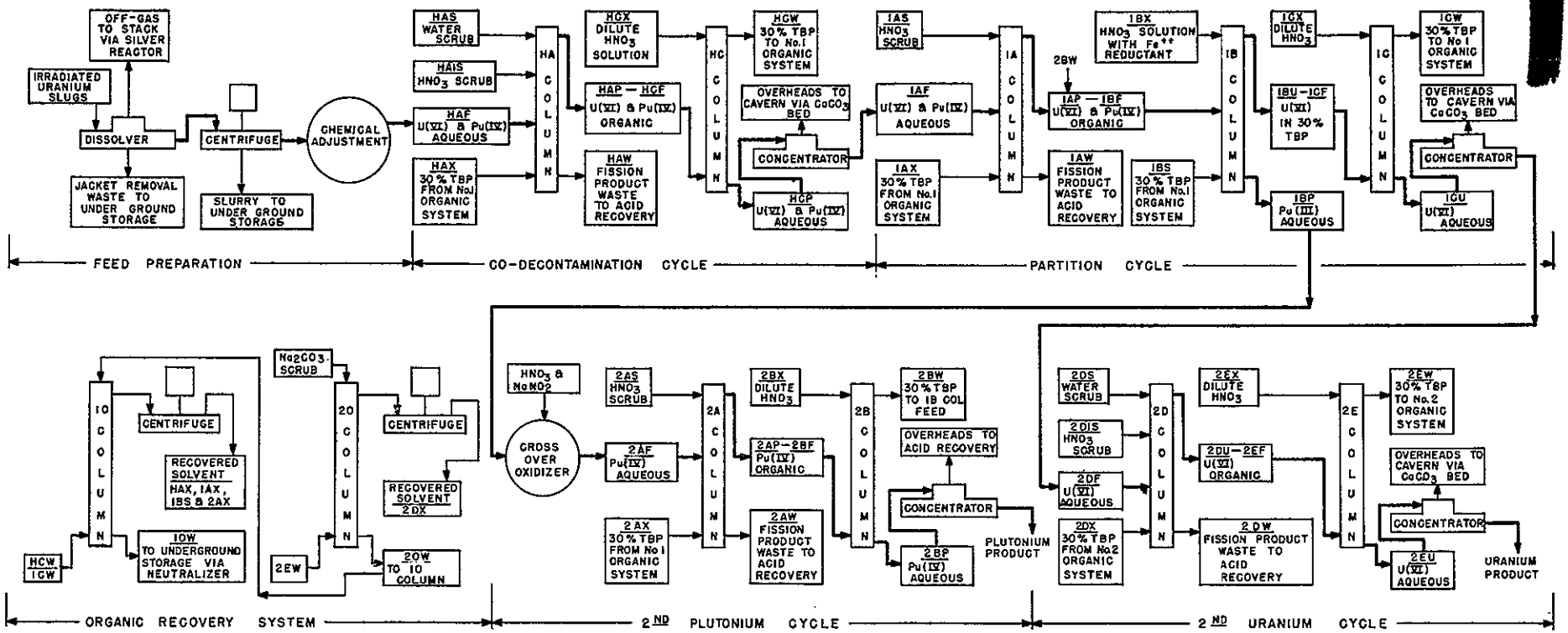

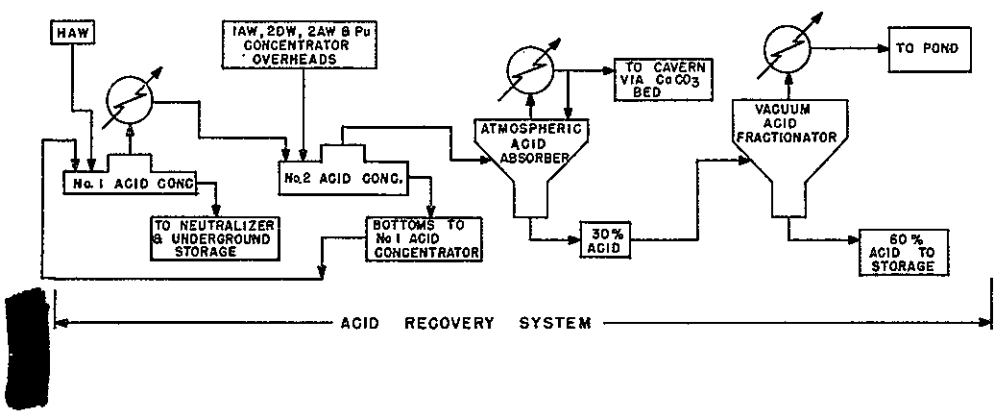

FIGURE I-1

PUREX PROCESS

SIMPLIFIED FLOWSHEET

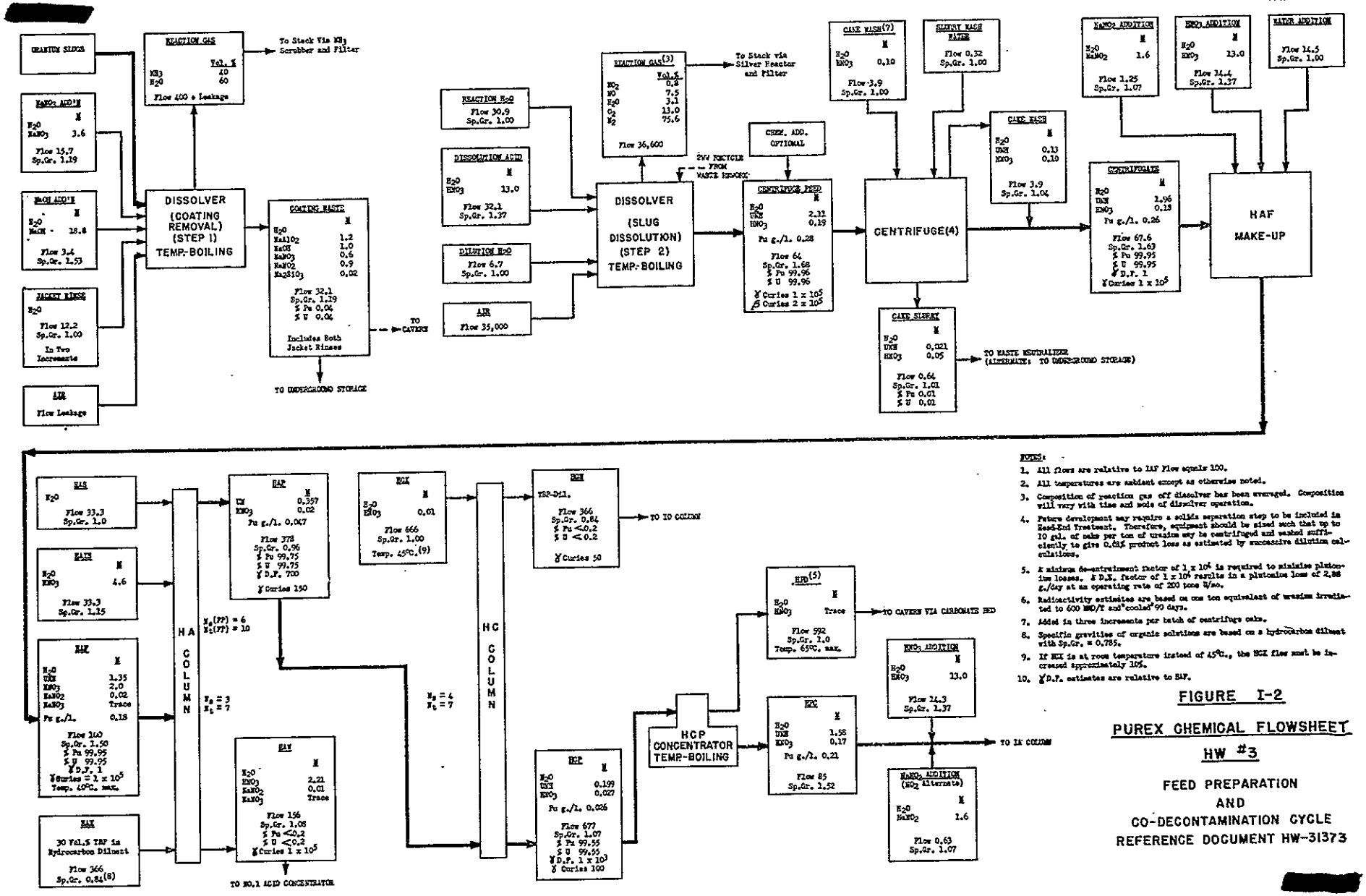

NOTES:

1. All flows are relative to HAF Flow equals 100.
2. All temperatures are ambient except as otherwise noted.
3. Composition of reaction gas off dissolver has been averaged. Composition will vary with time and mode of dissolver operation.
4. Future development may require a solids separation step to be included in Head-End Treatment. Therefore, equipment should be sized such that up to 10 gal. of cake per ton of uranium may be centrifuged and washed sufficiently to give 0.01% product loss as estimated by successive dilution calculations.
5. A minimum de-entrainment factor of 1×10^4 is required to minimize plutonium losses. A D.F. factor of 1×10^4 results in a plutonium loss of 2.88 g./day at an operating rate of 200 tons U/mo.
6. Radioactivity estimates are based on one ton equivalent of uranium irradiated to 600 MWD/T and cooled 90 days.
7. Added in three increments per batch of centrifuge cake.
8. Specific gravities of organic solutions are based on a hydrocarbon diluent with Sp.Gr. = 0.785.
9. If HCX is at room temperature instead of 45°C., the HCX flow must be increased approximately 10%.
10. % D.F. estimates are relative to HAF.

FIGURE I-2

PUREX CHEMICAL FLOWSHEET

HW #3

FEED PREPARATION
AND
CO-DECONTAMINATION CYCLE
REFERENCE DOCUMENT HW-31373

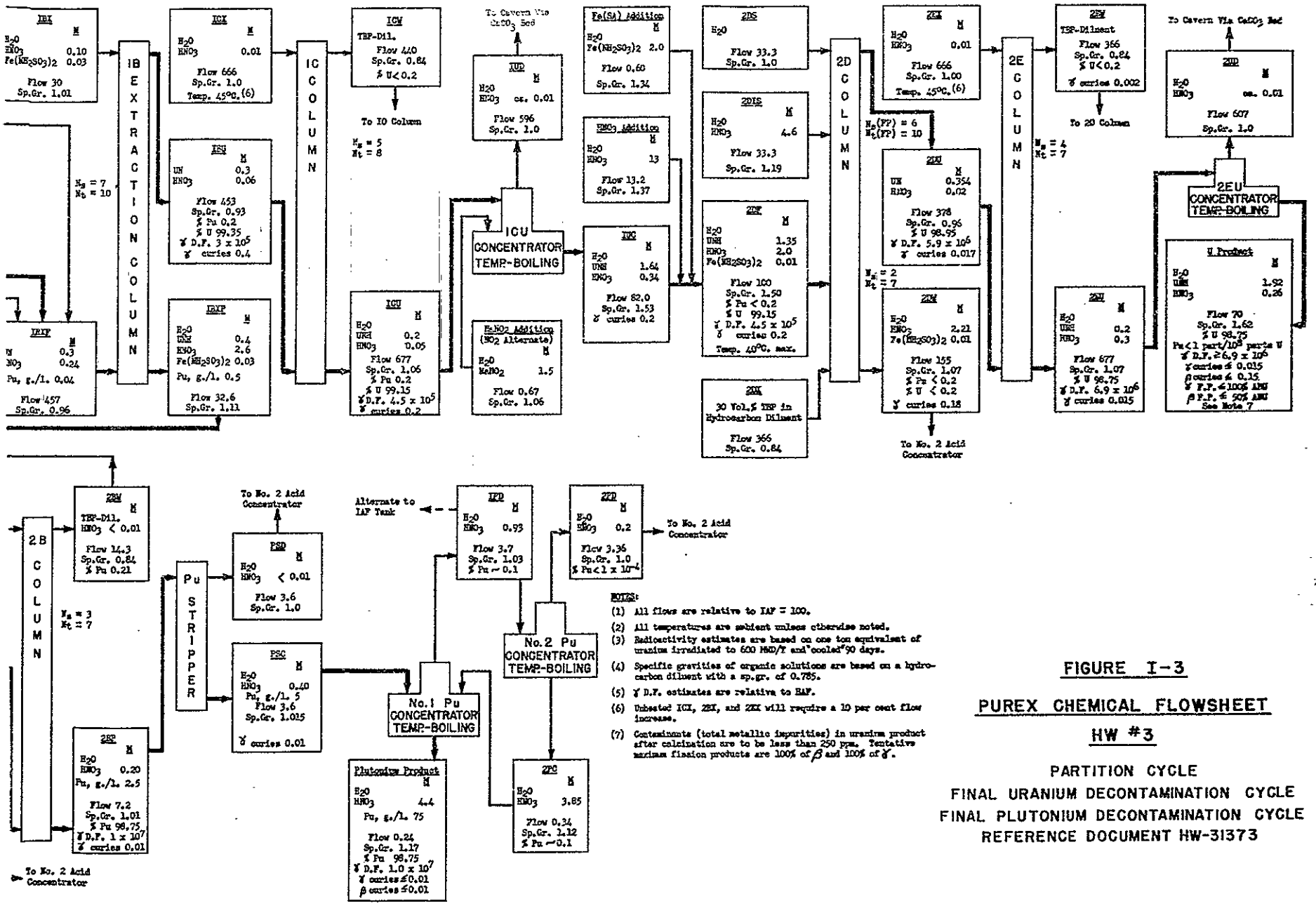

NOTES:

(1) All flows are relative to IAF = 100.

(2) All temperatures are ambient unless otherwise noted.

(3) Radioactivity estimates are based on one ton equivalent of uranium irradiated to 600 MWD/T and cooled 90 days.

(4) Specific gravities of organic solutions are based on a hydrocarbon diluent with a sp.gr. of 0.785.

(5) γ D.F. estimates are relative to IAF.

(6) Unheated 1CX, 2EX, and 2ZX will require a 10 per cent flow increase.

(7) Contaminants (total metallic impurities) in uranium product after calcination are to be less than 250 ppm. Tentative maximum fission products are 100% of β and 100% of γ.

FIGURE I-3

PUREX CHEMICAL FLOWSHEET

HW #3

PARTITION CYCLE

FINAL URANIUM DECONTAMINATION CYCLE

FINAL PLUTONIUM DECONTAMINATION CYCLE

REFERENCE DOCUMENT HW-31373

[redacted]

[redacted]

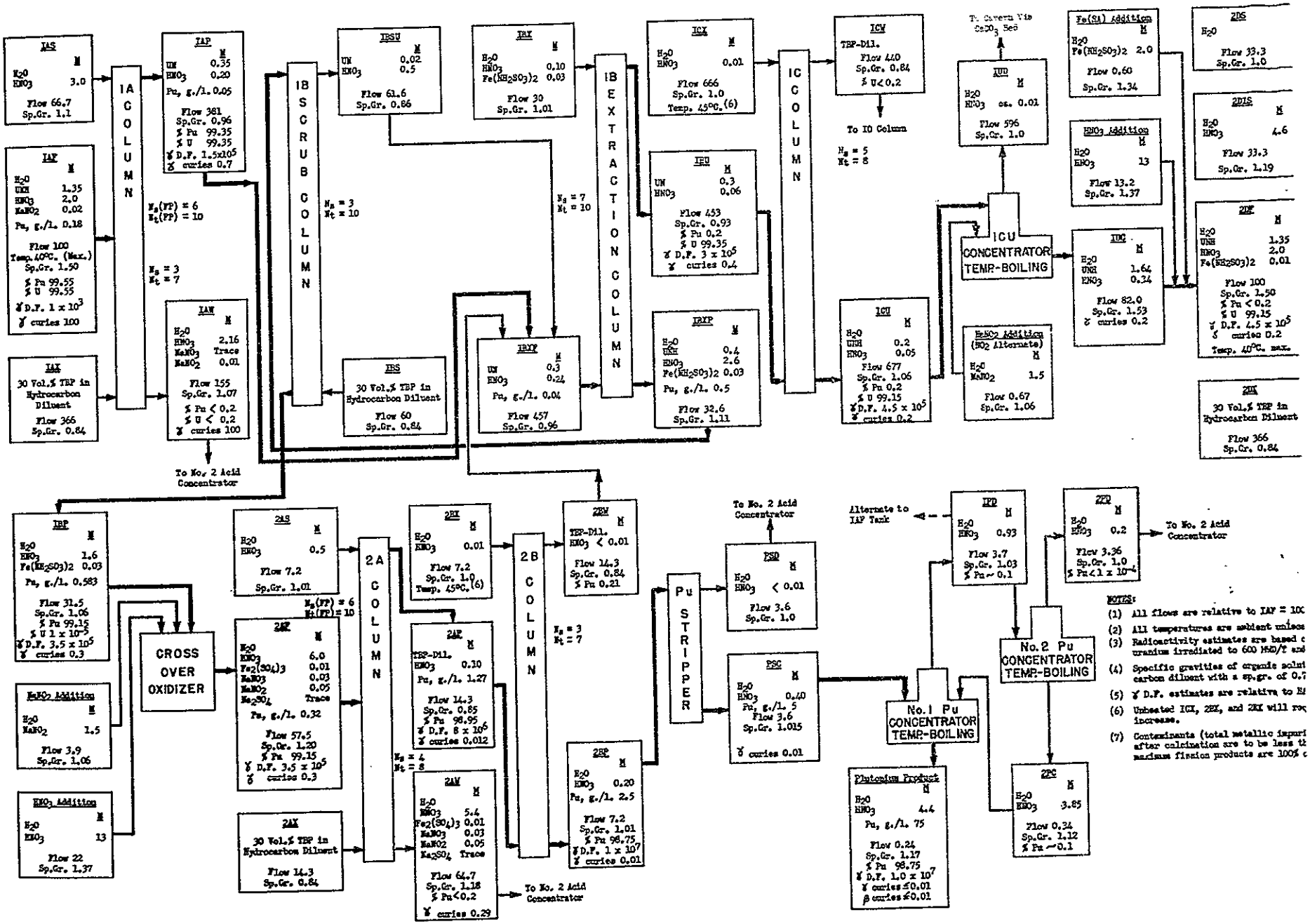

NOTES:

(1) All flows are relative to IAF = 10

(2) All temperatures are ambient unless

(3) Radioactivity estimates are based o uranium irradiated to 600 MWD/T and

(4) Specific gravities of organic solut carbon diluent with a sp.gr. of 0.7

(5) % D.F. estimates are relative to E

(6) Unheated ICX, 2EX, and 2EX will roo increase.

(7) Contaminants (total metallic impuri after calcination are to be less th maximum fission products are 100% o

[redacted]

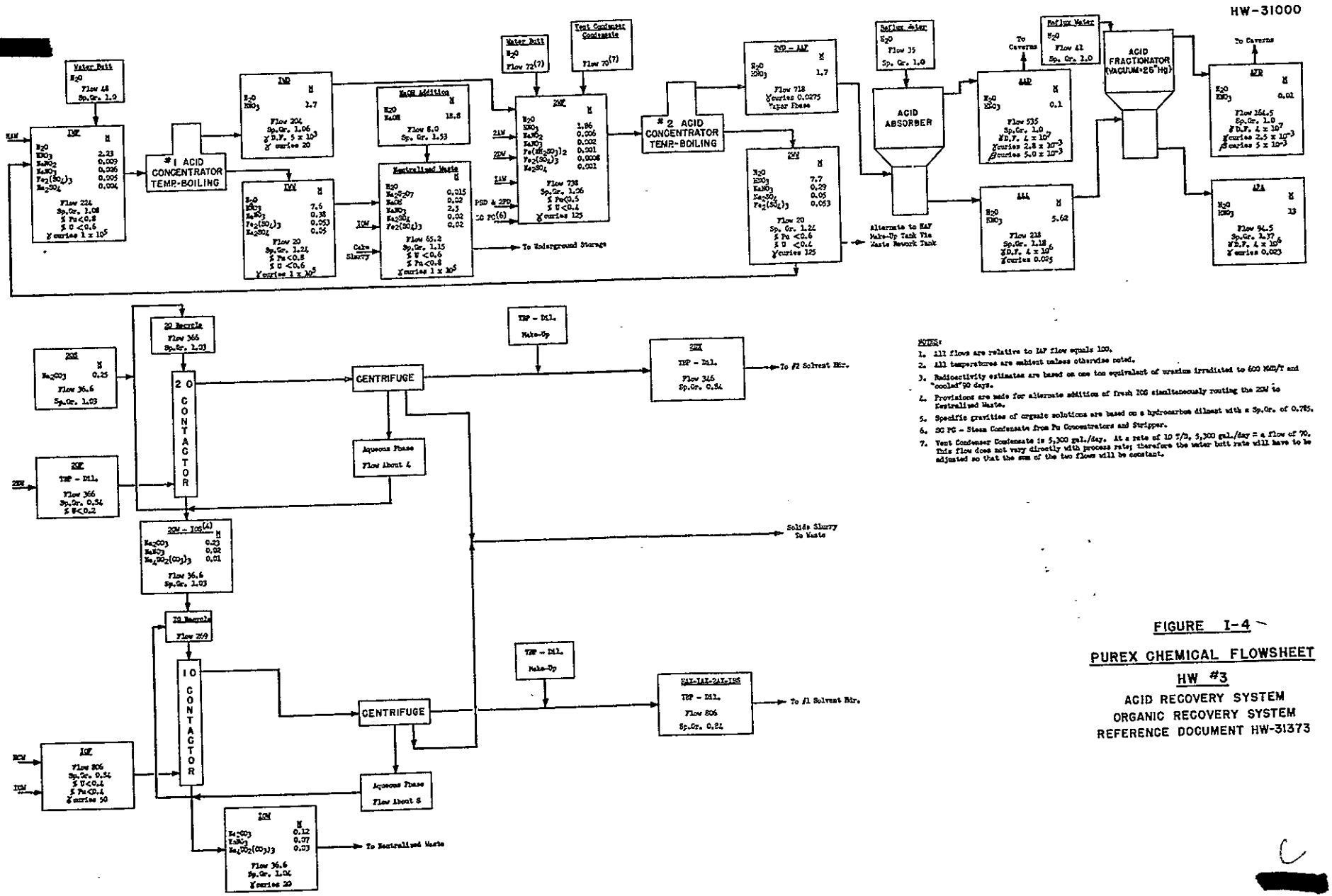

NOTES:

1. All flows are relative to HAF flow equals 100.
2. All temperatures are ambient unless otherwise noted.
3. Radioactivity estimates are based on one ton equivalent of uranium irradiated to 600 MWD/T and "cooled" 90 days.
4. Provisions are made for alternate addition of fresh IOS simultaneously routing the 2SN to Neutralized Waste.
5. Specific gravities of organic solutions are based on a hydrocarbon diluent with a Sp.Gr. of 0.785.
6. SC FC - Steam Condensate from Pu Concentrators and Stripper.
7. Vent Condenser Condensate is 5,300 gal./day. At a rate of 10 T/D, 5,300 gal./day = a flow of 70. This flow does not vary directly with process rate; therefore the water butt rate will have to be adjusted so that the sum of the two flows will be constant.

FIGURE I-4

PUREX CHEMICAL FLOWSHEET

HW #3

ACID RECOVERY SYSTEM

ORGANIC RECOVERY SYSTEM

REFERENCE DOCUMENT HW-31373

[redacted]

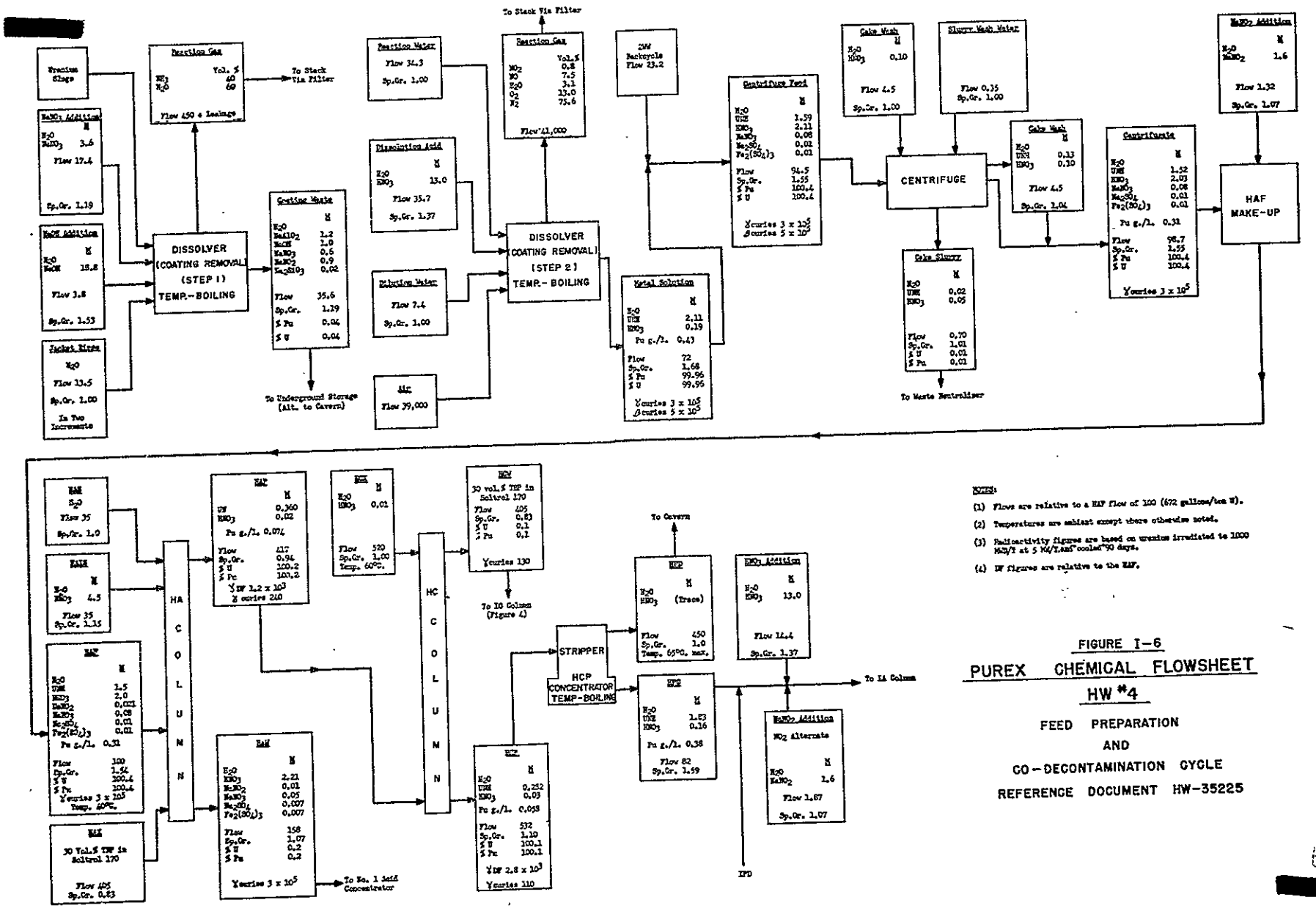

NOTES:

(1) Flows are relative to a HAF flow of 100 (672 gallons/ton U).

(2) Temperatures are ambient except where otherwise noted.

(3) Radioactivity figures are based on uranium irradiated to 1000 MWD/T at 5 MW/T and cooled 90 days.

(4) DF figures are relative to the HAF.

FIGURE I-6

PUREX CHEMICAL FLOWSHEET

HW #4

FEED PREPARATION

AND

CO-DECONTAMINATION CYCLE

REFERENCE DOCUMENT HW-35225

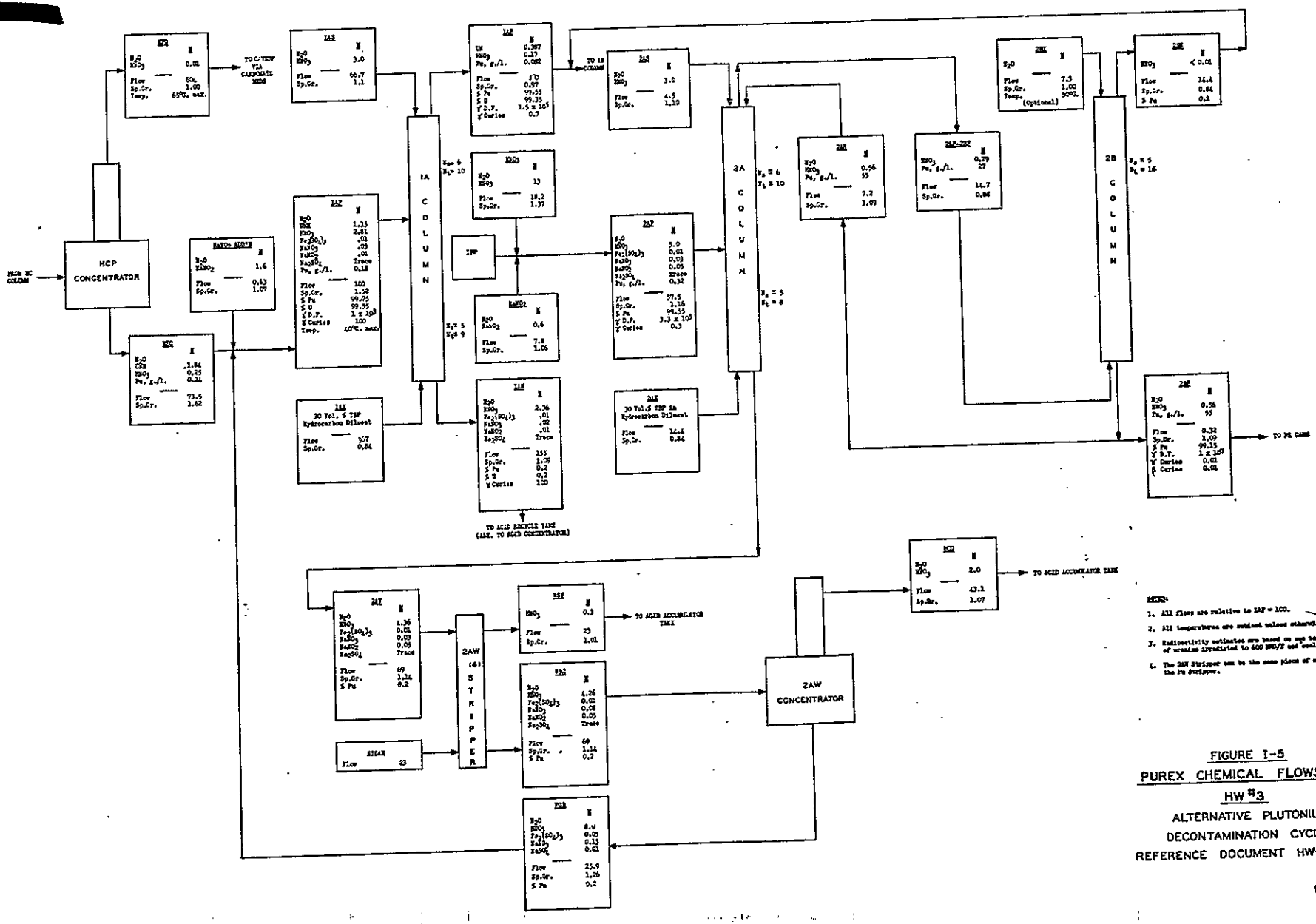

NOTES:

1. All flows are relative to 1AF = 100.
2. All temperatures are ambient unless otherwise noted.
3. Radioactivity estimates are based on use ten equivalent of uranium irradiated to 600 MWD/T and cooled 90 days.
4. The 2AW Stripper can be the same piece of equipment as the Pu Stripper.

FIGURE I-5

PUREX CHEMICAL FLOWSHEET

HW #3

ALTERNATIVE PLUTONIUM DECONTAMINATION CYCLE

REFERENCE DOCUMENT HW-31373

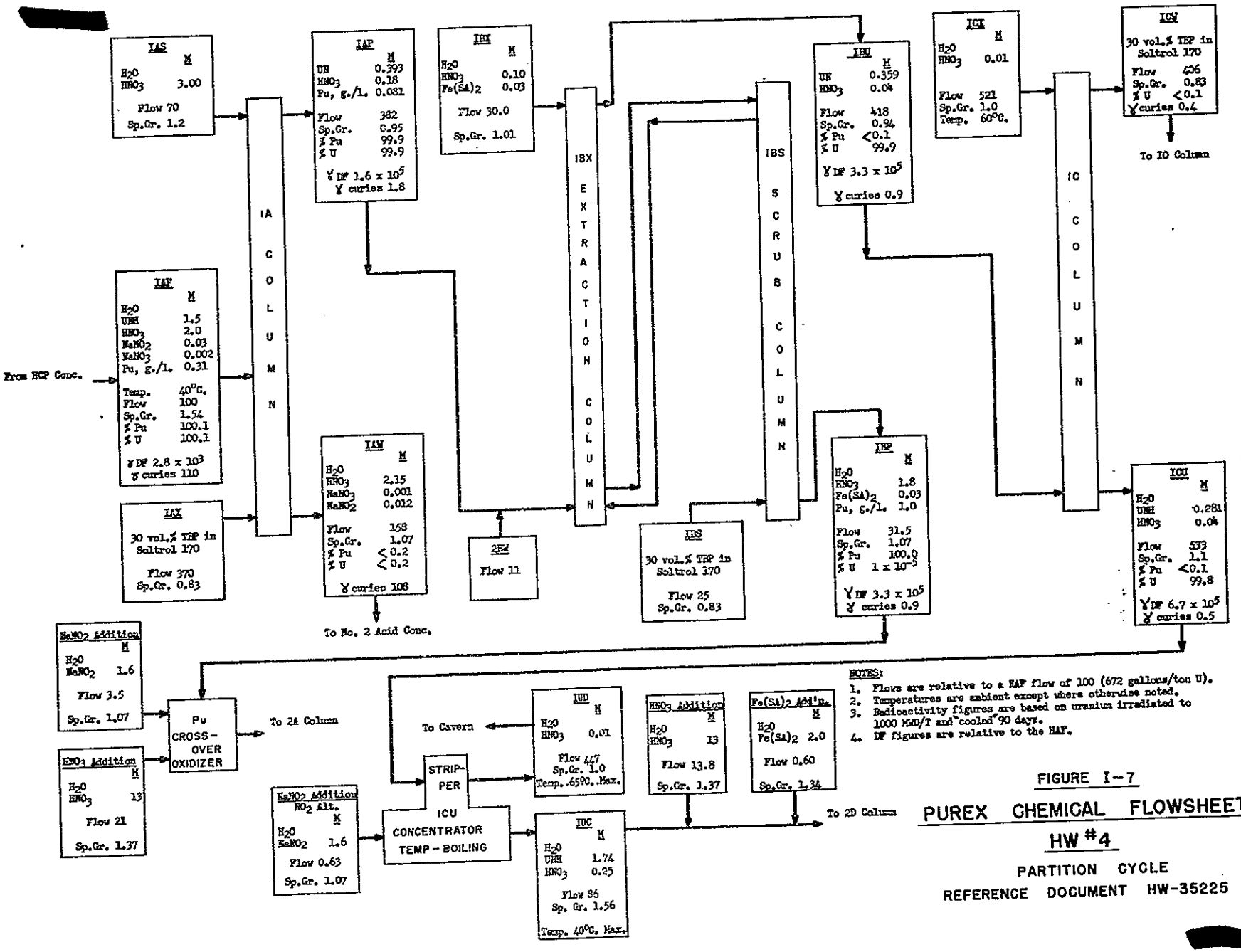

NOTES:

1. Flows are relative to a HAF flow of 100 (672 gallons/ton U).
2. Temperatures are ambient except where otherwise noted.
3. Radioactivity figures are based on uranium irradiated to 1000 MWD/T and cooled 90 days.
4. DF figures are relative to the HAF.

FIGURE I-7

PUREX CHEMICAL FLOWSHEET

HW #4

PARTITION CYCLE

REFERENCE DOCUMENT HW-35225

[redacted]

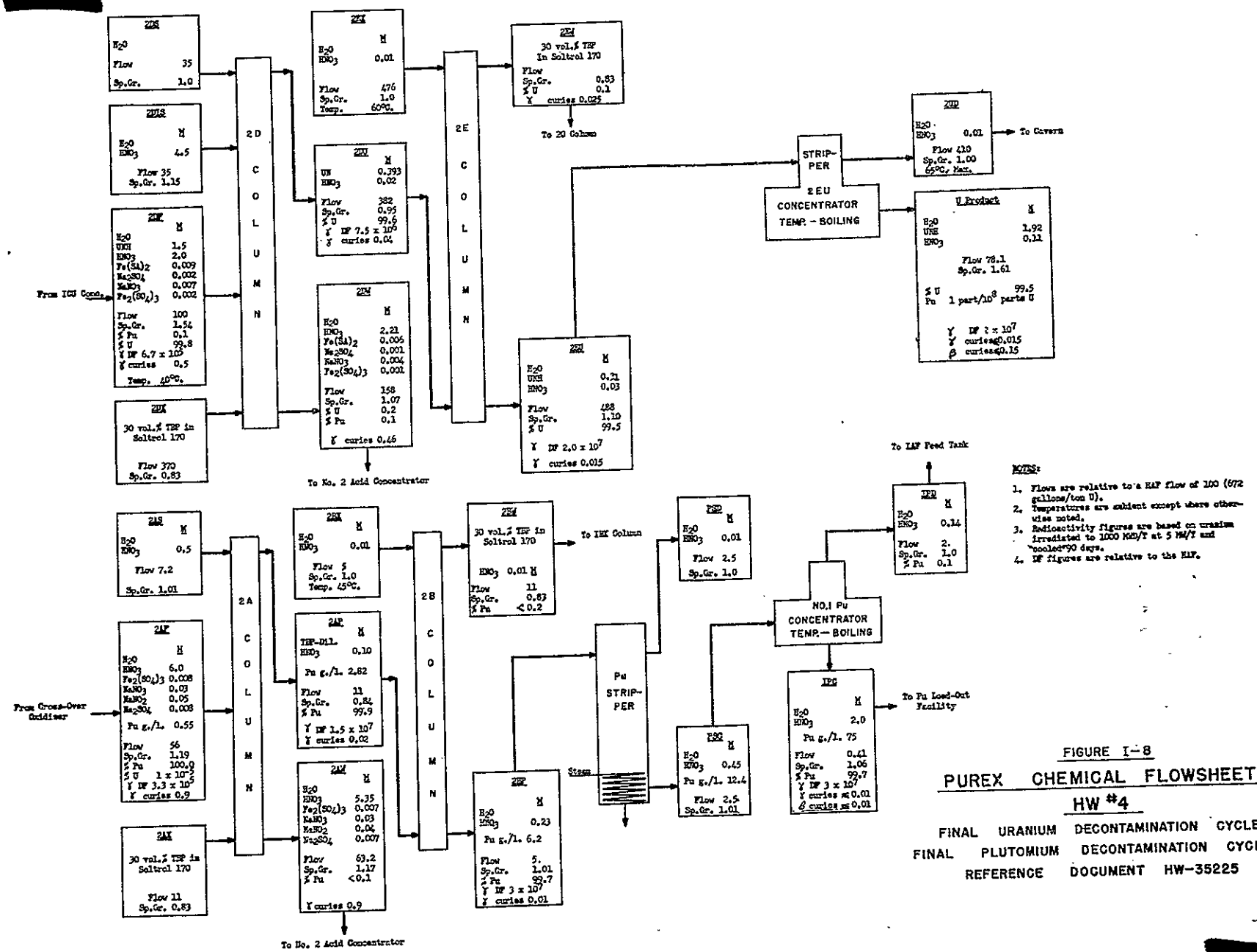

NOTES:

1. Flows are relative to a 1AF flow of 100 (672 gallons/ton U).
2. Temperatures are ambient except where otherwise noted.
3. Radioactivity figures are based on uranium irradiated to 1000 MWD/T at 5 MW/T and cooled 90 days.
4. DF figures are relative to the 1AF.

FIGURE I-8

PUREX CHEMICAL FLOWSHEET

HW #4

FINAL URANIUM DECONTAMINATION CYCLE

FINAL PLUTONIUM DECONTAMINATION CYCLE

REFERENCE DOCUMENT HW-35225

[redacted]

[redacted]

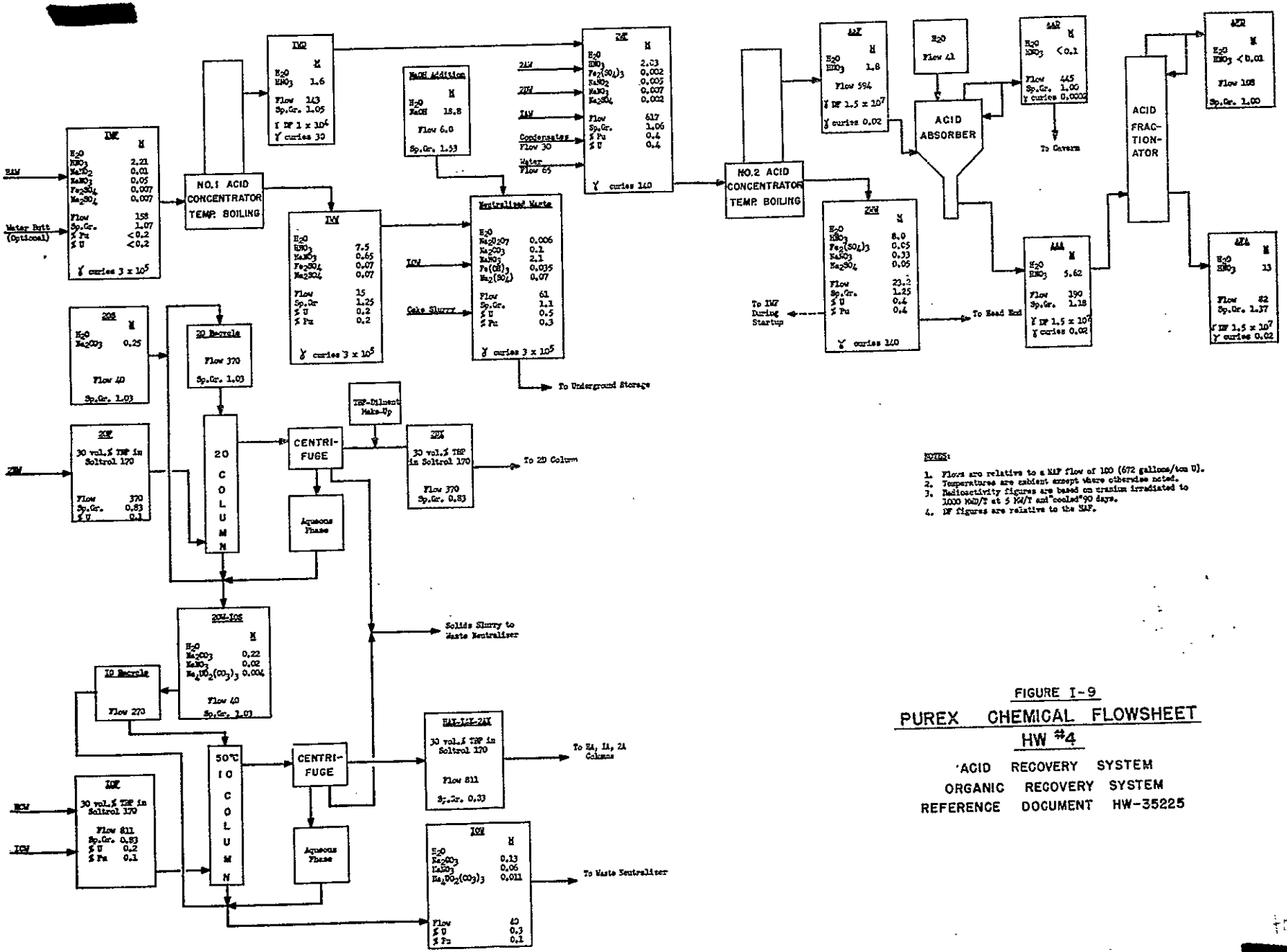

FIGURE I-9

PUREX CHEMICAL FLOWSHEET

HW #4

ACID RECOVERY SYSTEM

ORGANIC RECOVERY SYSTEM

REFERENCE DOCUMENT HW-35225

[redacted]

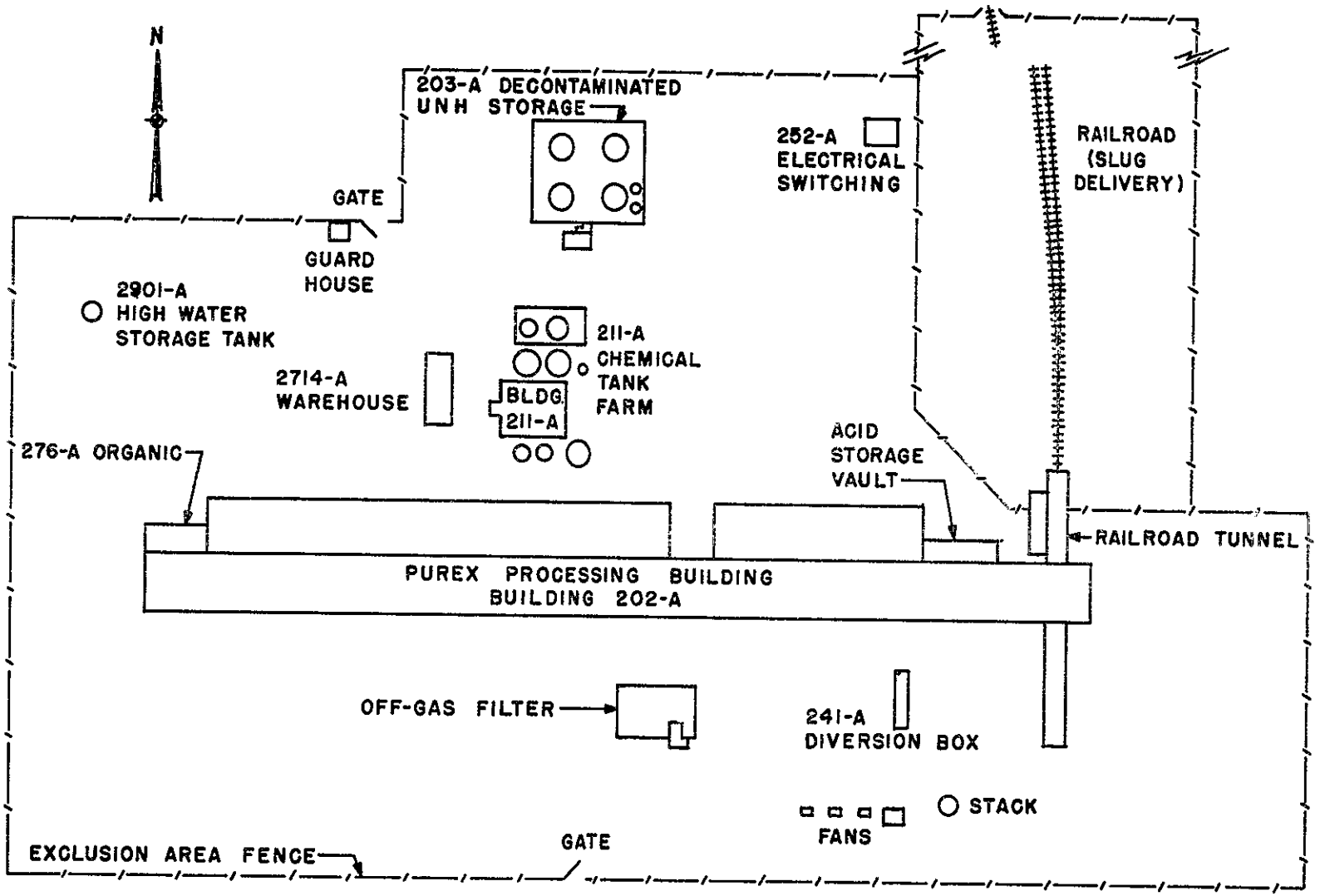

FIGURE I-10
SIMPLIFIED PUREX AREA PLOT PLAN
(FROM H-2-55051)

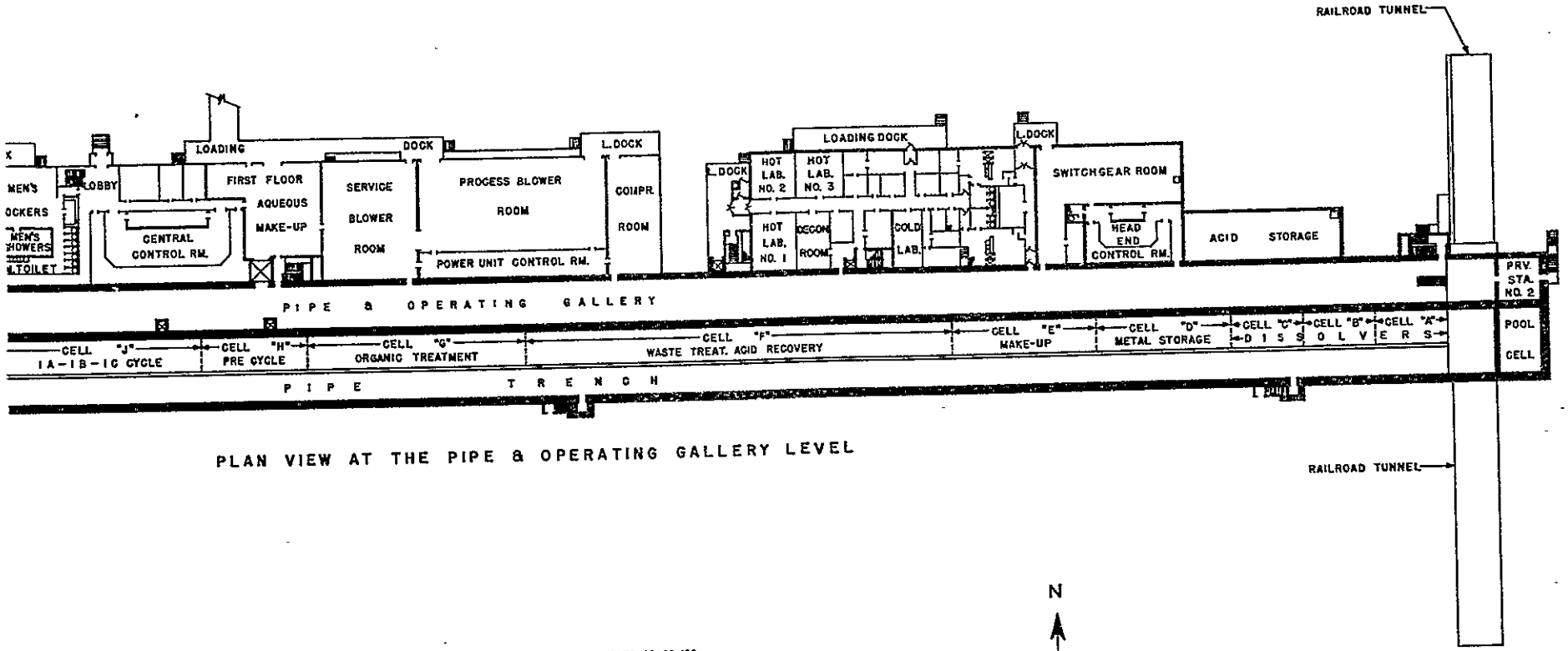

PLAN VIEW AT THE PIPE & OPERATING GALLERY LEVEL

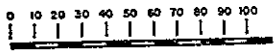

SCALE IN FEET

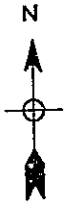

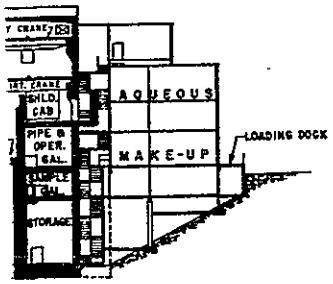

CROSS SECTION
(LOOKING WEST)

FIGURE I-11
202-A PROCESSING BUILDING
SIMPLIFIED LAYOUT
(FROM H-2-52061 & H-2-52064)

[redacted]

[redacted]

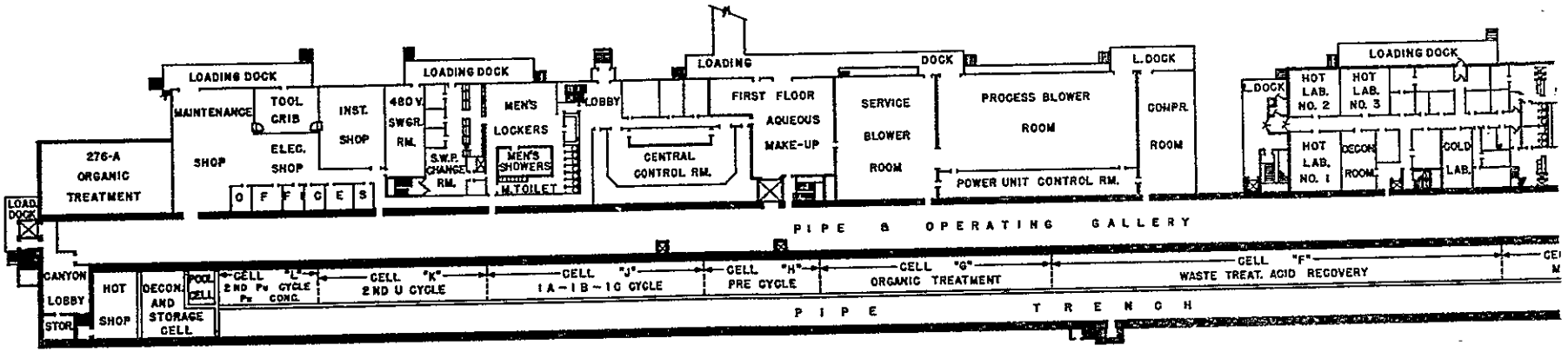

PLAN VIEW AT THE PIPE & OPERATING GALLERY LEVEL

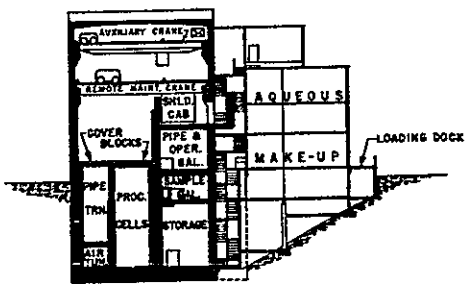

TYPICAL CROSS SECTION
(LOOKING WEST)

SCALE IN FEET

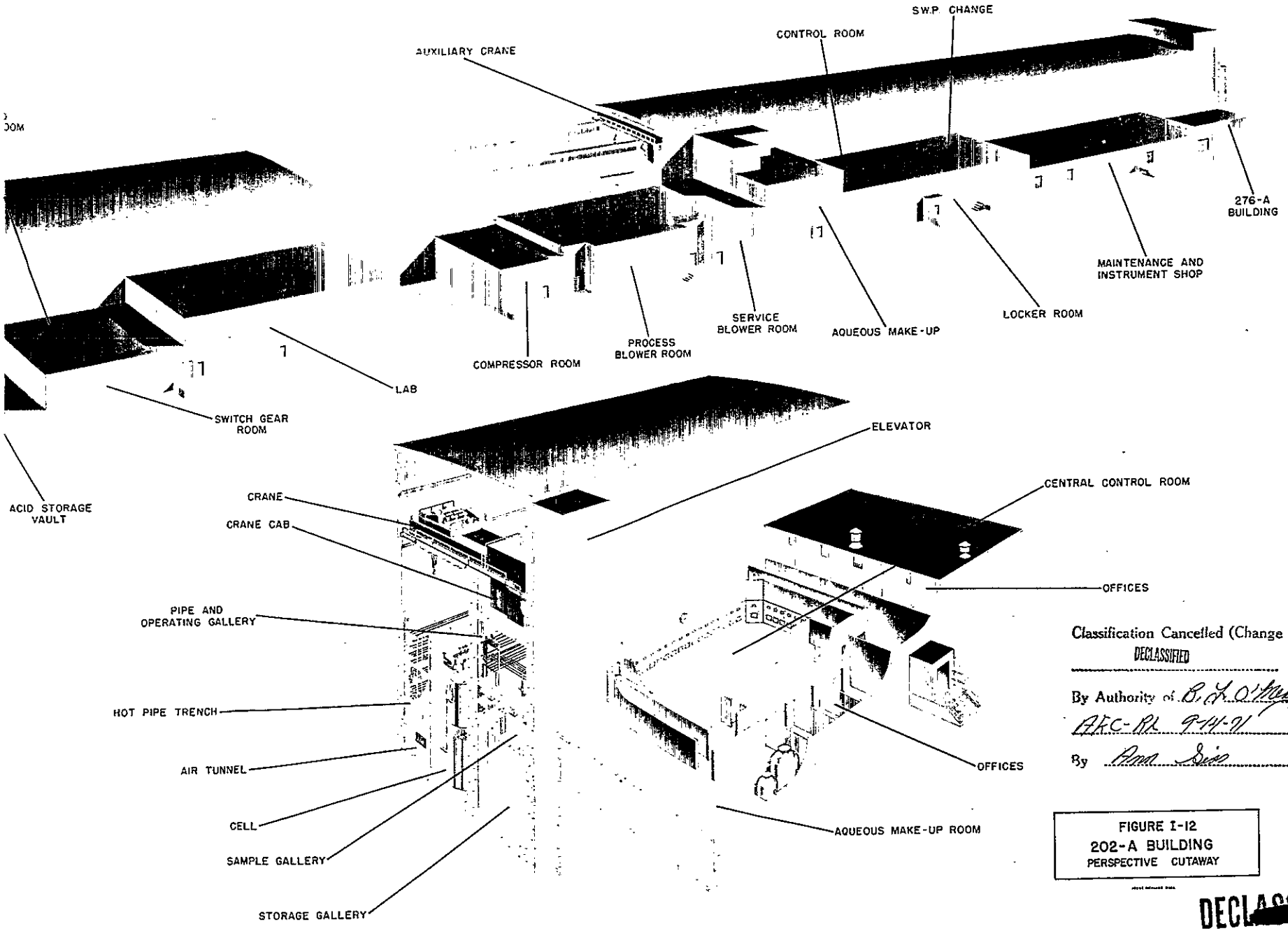

Classification Cancelled (Change to DECLASSIFIED)

By Authority of B. L. O'Meely

AEC-RL 9-14-71

By Ann Sim

FIGURE I-12
202-A BUILDING
PERSPECTIVE CUTAWAY

DECLASSIFIED

DECLASSIFIED

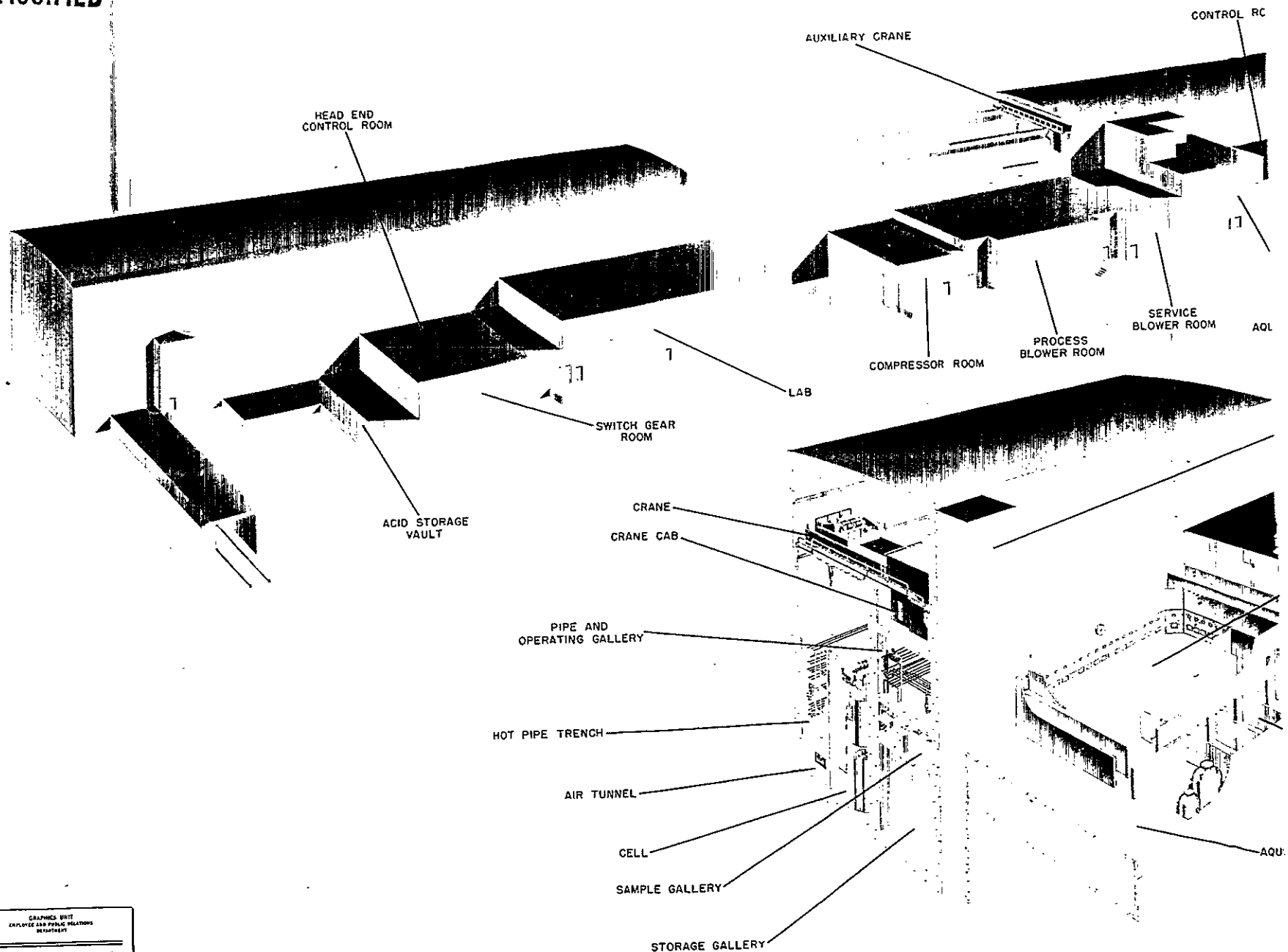

GRAPHICS UNIT
EMPLOYEE AND PUBLIC RELATIONS
DEPARTMENT

DRAWN BY J. DOYLE DATE 11/19/54

DWG. NO.

PART II: PROCESS

CHAPTER II: IRRADIATED SLUGS AND FISSION-PRODUCT DECAY

CONTENTS

	Page
A. DESCRIPTION OF SLUGS	202
1. Dimensions and Composition	202
2. Fabrication of the Canned Slug	202
3. Alternate Slug Types	203
B. NUCLEAR REACTIONS OF URANIUM	204
1. Nuclear Fission	204
2. Formation of Plutonium	206
3. Description of Hanford Reactors	208
C. THE FISSION PRODUCTS	208
1. Formation and Fission Yield	208
2. Units of Measurement	209
2.1 Curies and watts	209
2.2 Measurement of fission-product activity	210
3. Fission Products Important to Plant Operations	210
4. Fission-Product Accumulation During Pile Irradiation	211
5. Fission-Product Decay During "Cooling"	215
6. Fission-Product Activity in Purex "Cooled" Feed Metal	217
D. SLUG HANDLING PROCEDURE	218
REFERENCES	220
LIST OF TABLES AND FIGURES	221

CHAPTER II: IRRADIATED SLUGS AND FISSION-PRODUCT DECAY

Consideration of the properties of irradiated uranium slugs (in the present chapter) offers a logical introduction to the subsequent discussion of the process for separating plutonium and recovering uranium from the slugs. After a brief review of the preparation and composition of slugs charged to the pile, Chapter II contains a brief discussion of nuclear physics and a short description of the Hanford reactors. The chapter discusses the nuclear reactions involved in the formation of plutonium and fission products. After presenting methods for calculating the fission-product content of irradiated metal, the fission-product activity of typical Purex feed metals is discussed. Transition to Chapter III is provided by a brief discussion of the procedure for charging irradiated slugs to the Dissolvers.

A. DESCRIPTION OF SLUGS

1. Dimensions and Composition

Uranium slugs as received for processing in the Purex Plant are in the form of right cylinders enclosed in aluminum jackets which are bonded to the uranium with an aluminum-silicon alloy, the assembly designated as a canned slug. Most of the Hanford uranium slugs are 8.9 inches long and 1.44 inches in diameter (including the cans), although a few slugs 4.45 inches long are charged to the "warped" tubes of the older Hanford piles.

Detailed dimensions and compositions of the several constituent parts of a standard eight-inch canned slug are given in Figure II-1. Macro components of standard 4-in. and 8-in. slugs are as follows:

Component	Element		Weight 4 In.	Weight 8 In.
Core	Uranium		3.92 lb.	7.92 lb.
Bonding layer, total	2S aluminum*	88.5%	10 g.	29.5 g.
	Silicon	11.5%		
	Lead	0.1%		
Aluminum jacket, including end caps	2S aluminum*		50 g.	98.5 g.

*) The minimum Al content of 2S aluminum is 99.0%. A typical composition is 99.2% Al, 0.5% Fe, 0.25% Cu, and traces of Si, Mg, Mn, and Ti.

2. Fabrication of the Canned Slugs

The uranium, received at Hanford in the form of machined slugs, is submitted to a series of operations in the 300 Area canning facilities before it is ready for charging in the piles. First, according to the

"F" Type canning procedure currently used, the slug is subjected to a degreasing and pickling operation, then introduced to a 600°C. "duplex" bath where it is heated in the bottom (lead) layer and then agitated briefly in the upper aluminum-silicon layer. The slug is then quickly transferred to the Al-Si canning bath, also at about 600°C., where it is inserted in a preheated aluminum can and topped with an aluminum cap. After quenching, the slug is welded, machined, and inspected. The result of these operations is a continuous bond of uranium to aluminum through an Al-Si bonding layer approximately 20 mils thick.

3. Alternate Slug Types

Because the present canned slug is subject to physical distortion and rupture during irradiation, efforts are being made to develop an assembly that will permit long exposure at high pile power levels. It is therefore possible that slugs received at the Purex Plant in the future may differ from those presently used and consequently changes in handling techniques may be required. Among the slugs currently being studied are the cored slug and the "externally-internally-cooled" slug. The cored slug has a hollow center running most of the length of the slug. Both ends of the hollow core are plugged with uranium and the entire slug is enclosed with an aluminum can. The "externally-internally-cooled" slug has a hole in the center running the entire length of the slug. Cooling water passes both through the center hole and around the outer shell of the slug.

In addition to the natural uranium slugs used to make plutonium, a variety of other materials are irradiated to produce special products. Such items irradiated in regular tubes are usually enclosed in cans of the standard 1.44-inch diameter and are 4, 6, or 8 inches long. Since these slugs will probably not be processed in the Purex Plant, no detailed discussion is included here. For recognition purposes, a few designations and descriptions are given below. Lead shielding slugs, aluminum spacer dummy slugs, and lead-cadmium alloy temporary poison slugs are also often used in the pile.

Designation	Slug Metal Description	Composition, Wt. Per Cent
J	Alloy of aluminum and enriched uranium (U enrichment: 93.5% U-235, 6.5% U-238)	7.5% U, 93.5 Al
C	Alloy of aluminum and enriched uranium (U enrichment: 93.5% U-235, 6.5% U-238)	4% U, 96 Al
N	Alloy of aluminum and lithium	--
B	Bismuth	--
Q(10-66)	Thorium	--
E(Ike)	Slightly enriched uranium (1.75% U-235)	100% U

B. NUCLEAR REACTIONS OF URANIUM

1. Nuclear Fission

A reaction which results in the splitting of a nucleus into two approximately equal parts is called fission. One of the most important fission reactions occurs in uranium nuclei. In the most prominent reaction leading to fission in naturally occurring uranium, an atom of isotope 235 captures a neutron to form an excited compound nucleus U-236. This nucleus decays predominantly by fission but also by gamma emission, with the result that a small amount of rather stable (i.e., long-lived) U-236 is formed. The fission act of the excited U-236 nucleus may be likened, by anology, with the behavior of a liquid drop of matter in vibration. If, during these vibrations, there is a sufficient separation of the two nuclear masses so that the electrostatic forces of repulsion between them exceed the cohesive forces of "surface tension" for the whole nuclear mass, then fission occurs. However, if the excess energy given to the nucleus upon capture of the neutron can be released as gamma radiation from the vibrating compound nucleus, then a condition of stability may be attained without the occurrence of fission.

The new nuclei produced by the fission reaction belong to elements in the middle of the atomic series. The importance and great value of this reaction result from two of its features. First, each fission is accompanied by a large energy release. Second, the fission reaction releases neutrons in amounts sufficient to make the fission reaction self-sustaining when the conditions are properly controlled. The reactants and products of fission can be presented in the form:

$$\text{Uranium nucleus} + \text{single neutron} \longrightarrow \begin{array}{l}\text{(a) two new nuclei}\\ \text{(b) several free neutrons}\\ \text{(c) large amount of energy}\end{array}$$

At the instant of fracture the highly excited nuclear fragments have sufficient energy to eject neutrons. A typical reaction might be:

$$_{92}U^{235} + {}_{0}n^{1}\ (\text{slow}) \longrightarrow (_{92}U^{236}) \longrightarrow \underset{\text{highly excited}}{_{36}Kr^{94}} + \underset{\text{highly excited}}{_{56}Ba^{142}}$$

On the average, between two and three fast neutrons are emitted by the excited nuclei immediately on fission. The emission of these several neutrons for the single neutron captured makes self-sustained fission possible. For example:

$$_{36}Kr^{94} + {}_{56}Ba^{142} \longrightarrow {}_{36}Kr^{92} + {}_{56}Ba^{141} + 3\ {}_{0}n^{1} + \text{Energy}$$

Even following neutron release, the products are unstable, due to the unsatisfactorily high neutron-to-proton ratios of these nuclei. The unstable krypton and barium nuclei decay by the emission of beta particles, resulting in conversion of neutrons to protons within the atomic nucleus, in a so-called "fission decay chain". The decay continues from element to element until a stable isotope is reached. For example, the above unstable nuclei decay with beta and gamma emission in the following possible fission decay chains:

$$_{36}Kr^{92} \xrightarrow{\beta^-} Rb \xrightarrow{\beta^-} Sr \xrightarrow{\beta^-} Y \xrightarrow{\beta^-} {}_{40}Zr^{92} \quad \text{(stable)}$$

$$_{56}Ba^{141} \xrightarrow{\beta^-} La \xrightarrow{\beta^-} Ce \xrightarrow{\beta^-} {}_{59}Pr^{141} \quad \text{(stable)}$$

The tremendous energy released in the fission process makes the reaction important as a source of energy for special applications. The energy which is released arises from the excess mass of the original uranium nucleus and neutron over that of the final stable products, in accordance with the mass-energy equivalence. An estimate of the magnitude of the energy released per fission can be obtained by considering the reaction already referred to:

$$_{92}U^{235} + {}_{0}n^{1} \longrightarrow \text{(fission and neutron emission followed by decay to stable products)} \longrightarrow {}_{40}Zr^{92} + {}_{59}Pr^{141} + 3\ {}_{0}n^{1}$$

To compute the amount of mass which is converted to energy, the difference in the sums of the atomic weights is obtained.

Atomic Weight of Original Particles		Atomic Weight of Final Particles	
$_{92}U^{235}$	235.1240	$_{40}Zr^{92}$	91.9420
$_{0}n^{1}$	1.0089	$_{59}Pr^{141}$	140.9590
		$_{0}n^{1}$ (3)	3.0267
	236.1329		235.9277

Mass difference = 0.205 units of atomic weight

Energy released per fission = $\frac{0.205}{0.00107}$ = 190 M.e.v.

(0.00107 mass unit = 1 M.e.v.)

The estimated energy release is close to the accepted average release of 202 M.e.v. per fission. Most of the energy appears instantaneously as kinetic energy of the large fission fragments. This energy is dissipated by heating of the stopping (absorbing) materials. The remainder of the energy appears as energy of the gamma rays, beta particles, neutrons, and neutrinos which accompany the process. The distribution of the energy among the various particles is as follows:

Kinetic energy of fission fragments	168 M.e.v.
Gamma radiations from fission products	11 M.e.v.
Beta radiation from fission products	7 M.e.v.
Kinetic energy of neutrons	5 M.e.v.
Neutrino energy	11 M.e.v.
Total	202 M.e.v.

An interesting and important feature in the decay of the fission products is that, in the case of several of these products, the decay proceeds with emission of neutrons. Radioactive bromine and iodine formed in the initial fission reaction have been identified as neutron emitters. At least two other neutron emitters are present but they have not been identified. Neutron emission occurs in those cases in which the excess energy of a nucleus is so great that the excess cannot be dissipated quickly enough by beta and gamma emission alone. The neutrons which are emitted in this fashion are called "delayed neutrons". The growth and decay of delayed neutron activity is very similar to that of beta activity.

2. Formation of Plutonium

Plutonium is formed from uranium by nuclear reactions involving isotope U-238. The reaction starts with the capture of a neutron by a U-238 nucleus to give U-239, which in turn decays by beta-particle emission to element 93, or neptunium. The neptunium isotope, Np-239, decays to plutonium, Pu-239. This sequence of reactions may be written as follows:

$$_{92}U^{238} + {}_{0}n^{1} \longrightarrow {}_{92}U^{239} + \gamma$$

$$_{92}U^{239} \xrightarrow[t_{1/2} = 23.5 \text{ min.}]{} {}_{93}Np^{239} + {}_{-1}\beta^{0}$$

$$_{93}Np^{239} \xrightarrow[t_{1/2} = 2.33 \text{ days}]{} {}_{94}Pu^{239} + {}_{-1}\beta^{0} + \gamma$$

Plutonium itself is radioactive and decays by alpha-particle emission to uranium, according to the following reaction:

$$_{94}Pu^{239} \xrightarrow[t_{1/2} = 24{,}300 \text{ yr.}]{} {}_{92}U^{235} + {}_{2}He^{4}$$

[redacted]

Since the half life of Pu-239 is 24,300 years, it is relatively stable and can be manufactured and retained in quantity. However, to produce the material an intense source of neutrons must be available, since 2.52×10^{21} neutrons are required for each gram of plutonium. Such a source of neutrons is provided by the excess neutrons from the fission of isotope U-235. Thus, the process for producing plutonium consists of providing the conditions necessary for slow neutrons to start the fission of isotope U-235 and then to slow down the resulting fast neutrons so that some of them are captured by the U-238 nucleus. At the same time, at least one new neutron from each atom of U-235 fissioned must be available to continue the fission of more U-235 and so maintain the chain reaction.

During pile irradiation, an atom of Pu-239 can capture a neutron to form Pu-240, which may in turn capture another neutron to form Pu-241. It is thus evident that the opportunity for formation of these higher isotopes increases as the quantity of Pu-239 builds up with exposure. For certain product application high concentrations of Pu-240 are objectionable and for some of the plutonium produced at Hanford, maximum exposure limits have been set. (At the time of writing, the limit is 215 megawatt-days/ton U but it is likely that this limit may be raised to 275 or more megawatt-days/ton U.) The increase in Pu-240 content with increase in metal exposure level is shown on Figure II-2.

Figure II-2 also shows the rate of change of Pu-239 concentration as a function of megawatt-days/ton exposure for both the older (all but KE and KW) Hanford piles and the new KE and KW Piles. Of particular interest is the increased conversion ratio (grams Pu-239 produced per gram U-235 destroyed) for the K piles (see pile discussion in B3 below). Some typical concentrations of various isotopes at exposures selected from Figure II-2 are given in the table below:

	Megawatt-Days/Short Ton of Uranium		
	200	600	900
Old Piles (B, C, D, DR, F, and H):			
Total grams Pu/ton U	187	514	722
Grams Pu-239/ton U	183	487	669
Grams Pu-240/ton U	3.5	26	50
Grams U-235 remaining after irradiation/ton U	6235	5835	5571
K Piles (KE and KW):			
Total grams Pu/ton U	196	541	762
Grams Pu-239/ton U	192	512	706
Grams Pu-240/ton U	3.6	27	53
Grams U-235 remaining after irradiation/ton U	6235	5838	5578

3. Description of Hanford Reactors

The structure in which plutonium is formed from uranium is called a nuclear reactor, or pile. Functionally, it provides the proper arrangement of fuel, moderator, coolant, controls, and shielding to permit controlled, sustained fission reactions. The Hanford piles are constructed from graphite blocks arranged to form a rectangular prism. The graphite cores of the B, C, D, DR, F, and H Piles (hereafter called older piles) are about 36 feet wide, 36 feet high and 28 feet long and contain 2004 process tubes. The core of the newer type K piles (KW and KE) are about 41 feet wide, 41 feet high and 35 feet long and contain 3220 process tubes. The aluminum process tubes, which run from front to back in the piles, are arranged on 8-3/8 inch square lattice spacing in the older piles and on 7-1/2 inch square lattice spacing in the two new piles. The new lattice spacing is computed to give a five per cent increase in the amount of plutonium formed per atom of U-235 destroyed. The heat evolved as a result of fissioning in the piles is removed by cooling water which is pumped at high velocity through annular openings between the canned slugs and the process tubes.

The reaction rate (or power level) of the Hanford piles is determined from the temperature rise and flow rate of the cooling water, and is expressed in megawatts. The total irradiation that the uranium receives in the pile is measured in megawatt-days per ton (MWD/T) of uranium. The amount of plutonium produced in a given quantity of uranium is a function of the total irradiation which is the product of residence time and average local power level. Several factors establish the limiting exposure. Such objectives as uranium economy and low operating expenses favor higher exposure levels, while specification limits on plutonium isotopes (see B2 above) and slug stability limitations may dictate lower exposure levels.

C. THE FISSION PRODUCTS

1. Formation and Fission Yield

The two nuclear fragments which are formed during the fission of a heavy isotope, such as U-235, are called fission products. The masses of these fragments vary considerably because of variations in asymmetry in the heavy isotope nucleus at the instant of fission. In all cases, however, the sum of the mass numbers of the two fragments plus the liberated neutrons must total to 236, the mass number of the excited uranium nucleus (U-235 plus one neutron). Thus, when two neutrons are liberated during the fission of U-235, one may find a large number of possible combinations of mass numbers, ranging from 160-74, 159-75.....to 117-117. The probability of a fission fragment with a given mass number resulting from fission is called the fission yield. Thus a 6.17% fission yield for mass number 140 indicates that for every 100 atoms of (in this case) U-235 which fission, 6.17 fission fragments of mass number 140 are formed. The fission yield is based on mass number rather than atomic number because the elemental composition of the fission products changes with time as a result of beta decay.

During pile operation, as Pu-239 is formed it begins to fission in a manner similar to U-235. This fact is of importance for high exposure uranium for two reasons. In the first place, the yield of Pu-239 per megawatt-day of exposure falls off, a serious effect in straight Pu-239 production although of less significance if the released fission energy is recovered as usable power. A corollary to the yield decrease is a moderate increase in concentrations of long-lived fission products relative to Pu-239. The second significant point stems from the fact that the slow-neutron fission yields of the two isotopes are not identical. This is shown in Figure II-3 where the U-235 and Pu-239 fission yield versus mass number curves are both plotted.

After the original fission, the fission fragment beta decays through a series of successive daughter elements eventually to become a stable element. These decay mechanisms are depicted on conventional nuclide charts. For a fission fragment of mass number 105 the decay proceeds as follows:

$$_{42}Mo^{105} \xrightarrow{\beta^-} {}_{43}Tc^{105} \xrightarrow{\beta^-} {}_{44}Ru^{105} \xrightarrow{\beta^-} {}_{45}Rh^{105} \xrightarrow{\beta^-} Pd^{105} \quad \text{(stable)}$$

The approximately 180 known radioactive fission products occur in more than 60 decay chains, an average of approximately 3 members per chain. Theoretically, there should be, on the average, between 3 and 4 members per decay chain. The fact that the average chain length is only about 3 indicates that there are other radioisotopes which have not yet been identified. Most of these fission products, however, are very short-lived or long-lived so that it is difficult to conduct experimental studies to identify them.

2. Units of Measurement

2.1 Curies and watts

Before describing methods for calculating the amount of radioactivity in a given quantity of irradiated uranium, the various units used to measure this radioactivity are defined.

A unit in common usage is the curie, which is defined as the activity of a radioactive source which is disintegrating at the rate of 3.7×10^{10} disintegrations per second. In a colloquial sense, it is common to employ the terms beta curies and gamma curies. Used in this way, a beta curie refers to 3.7×10^{10} beta particles per second while a gamma curie refers to 3.7×10^{10} gamma photons per second. Since many isotopes have complex decay schemes, it is necessary to be cautious in interpreting the various types of "curies" involved. The number of isotopes considered and the radiation energy included in any specific case must be carefully defined. For example, Cs-137 atoms decay to Ba-137 by two decay mechanisms: in 8% of the cases directly by emission of a 1.17-M.e.v. beta particle and in 92% of the cases by emission of 0.523-M.e.v. betas to form a metastable form of Ba-137 that subsequently drops to the ground state by radiating a gamma photon of 0.66 M.e.v. Hence, one curie of Cs-137 may be considered equivalent to one beta curie plus 0.92 gamma curie.

The rate of energy production, in watts, by a given isotope may be obtained by multiplying the number of curies by $(5.92 \times 10^{-3})(E)$, where E is the average energy of particle or photon per disintegration, expressed in M.e.v. In the case of beta particles, the M.e.v. values generally listed in tables are maximum energy. When maximum beta-particle values are listed, the average beta energy may be approximated by multiplying by 0.4.

The methods for converting curies to units used in studying biological exposure (reps, rems, etc.) are given in Chapter XX.

2.2 Measurement of fission-product activity

At Hanford, several types of measuring devices (counters) are used to determine the disintegration rates of fission products. Among these are: (a) the BGO (Beta-Gamma-Offner) Counter which is used primarily for counting beta particles, and (b) the Gamma Scintillation Counter and the Gamma Ray Spectrometer which are used to count gamma photons. In each of these devices the actual fission-product disintegrations are not measured directly, but the effects produced by the radioactive particle on other substances are measured. For example, in the BGO Counter the beta particles entering an argon-filled tube produce ionization of the gas and cause an electrical impulse which may be measured. In the Gamma Scintillation Counter and the Gamma Ray Spectrometer, the gamma photons enter and excite a thallium-activated thorium iodide crystal which in turn gives off light which may be measured. The counting efficiency of the standard counters (that is, the ratio of the counts registered to the actual disintegrations) is a complex function of (a) the energy of the particle measured, (b) the basic design of the counter, and (c) the mounting procedure used for the sample. For certain fission products of interest in the Purex Plant, factors for converting laboratory reported values to curies have been listed on Table II-1. These conversion factors apply only for the specific counting conditions stated on Table II-1. Also on Table II-1 have been listed the activities of plutonium and natural uranium as determined by the various Hanford counters.

3. Fission Products Important to Plant Operations

In normal operation of the plant, uranium metal slugs are irradiated in the piles for periods ranging from about 30 days to about 1 year and then are stored for a period of 70 to 100 days before being processed. The variations in irradiation time are necessary to (a) balance the effects of differences in neutron flux at different points in the pile, (b) achieve the varied integrated irradiation desired (200 to 1000 or more megawatt-days/ton) and (c) allow for differences in pile power level (at present approximately 750 to 1000 megawatts in the older piles and an estimated 2500 megawatts in the K reactors). A "cooling" time of 70 to 100 days is normally used so that (a) gamma emitting 2.33-day neptunium-239 will decay to plutonium, (b) 8.1-day iodine-131 which produces solvent cleanup difficulties in the Plant may decay to a tolerable level, and (c) the 6.7-day U-237 will decay out so that its activity is negligible in the recovered uranium product. Also, other short-lived activities (such as 11-hour Y-93, 17-hour Zr-97, etc.) decay to negligible levels.

The amount of 6.7-day half-life U-237 in the irradiated metal discharged from the piles varies with the history of the uranium charged to the piles. The U-237 content of irradiated recycle uranium (i.e., uranium which has been through the pile one or more times, recovered, and enriched back up to a natural uranium U-235 content by diffusion-plant operations) at the time of discharge from the pile is greater than that in irradiated natural uranium. The increased concentration of U-237 in the irradiated recycle uranium results from the increased concentration of U-236 in the recycle uranium. The U-236 is present in the recycle uranium as a result of neutron absorption by U-235 during the initial pile irradiation. In subsequent irradiation of the recycle uranium the U-236 captures a neutron to become U-237, to supplement the amount present as a result of the n, 2n pile reaction with U-238. In natural uranium the isotopic content is: U-234, 0.0054 per cent; U-235, 0.7115 per cent; and U-238, 99.28 per cent. For recycle uranium originally irradiated to a 600 megawatt-day/ton level, then enriched to a natural uranium U-235 content, the isotopic content is: U-234, approximately 0.0066 per cent; U-235, 0.7115 per cent; U-236, 0.013 per cent; U-238, 99.27 per cent.

The important long-lived activities which remain after the "cooling" period are tabulated on Table II-2.

4. Fission-Product Accumulation During Pile Irradiation

4.1 General method of calculation

During the operation of the pile there are 3×10^{10} fissions/second occurring for each watt of pile power. Thus, for a pile operating at 2500 megawatts there are $2500 \times 10^6 \times 3 \times 10^{10} = 7.5 \times 10^{19}$ fissions/second, 6.5×10^{24} fissions/day, or a total of 1.3×10^{25} fission fragments/day. Since all of these fission products do not decay immediately to stable isotopes, radioactive isotopes accumulate in pile metal. The rate of accumulation is governed by the pile power, and the total radioactivity is a function of the time of operation.

The over-all change in the radioactivity of irradiated uranium, as measured in curies, is not a simple function of the number of fission fragments which have been produced, since (a) the half life of each of the many radioisotopes governs its disintegration rate and (b) many radioisotopes decay to daughter activities which contribute to the over-all disintegration rate. The radioactivity of individual fission products in the uranium at time of discharge from the piles may be calculated by use of the following equations:

$$A = K_1 PY(1-e^{-at}) \quad \text{.....} \quad (1)$$

and

$$B = K_1 PY\left[\frac{b}{b-a}(1-e^{-at}) - \frac{a}{b-a}(1-e^{-bt})\right] \quad \text{.....} \quad (2)$$

where A = activity in curies/ton U from parent isotope;

B = activity in curies/ton U from daughter isotope;

K_1 = a constant = 0.85×10^6;

P = megawatts of total fission power per ton of uranium, i.e., $\frac{\text{(megawatt days/ton U)}}{\text{days exposure}}$;

Y = fractional fission yield of the fission product;

a = decay constant of parent isotope,

$$= \frac{0.693}{\text{half life in days}};$$

b = decay constant of daughter isotope,

$$= \frac{0.693}{\text{half life in days}};$$

t = irradiation time, days; and

e = the base of natural logarithms = 2.718.

The above Equations (1) and (2) are used in calculating fission-product activity in terms of curies. To permit calculation of the power released as a result of the fission-product activity, the above equations are multiplied by the energy of the particle or photon evolved to produce the following equations:

$$W_A = K_2 PYE\,(1-e^{-at}) \quad \text{.....(3)}$$

$$= 5000\ PYE\,(1-e^{-at})$$

and

$$W_B = K_2 PYE \left[\frac{b}{b-a}(1-e^{-at}) - \frac{a}{b-a}(1-e^{-bt})\right] \quad \text{.....(4)}$$

$$= 5000\ PYE \left[\frac{b}{b-a}(1-e^{-at}) - \frac{a}{b-a}(1-e^{-bt})\right]$$

where W_A = watts of parent isotope radioactivity/ton of uranium;

W_B = watts of daughter isotope radioactivity/ton of uranium;

E = average energy of particle or photon evolved, expressed in M.e.v.;

K_2 = a constant = $K_1 \times 5.92 \times 10^{-3} = 5000$.

In using the above equations, half lives and irradiation time must be expressed in the same time units (i.e., hours, days, or years).

To demonstrate the use of Equations (1) and (3) above, the radioactivity from the long-lived Sr-89 in uranium slugs which have received an integrated exposure of 900 megawatt-days/ton over a period of 200 days in the pile is calculated as follows:

Sr-89 half life = 53 days;

Sr-89 fission yield = 4.6%;

Sr-89 average beta-particle energy = 1.46 M.e.v.

From Equation (1),

$$A = (0.845 \times 10^6)(900/200)(0.046)(1-e^{-(0.693 \times 200)/53})$$

$$= 1.62 \times 10^5 \text{ beta curies/ton of uranium.}$$

From Equation (3),

$$W_A = (5000)(900/200)(0.046)(0.4 \times 1.46)(1-e^{-(0.693 \times 200)/53})$$

$$= 560 \text{ watts of beta-particle energy/ton of uranium.}$$

4.2 Simplified method for normal Purex feeds

Although the above equations may be used for calculation of the radioactivity present from various fission products at the time of discharge from the piles, calculations by this method are time consuming. A simplified calculation method using the data on Table II-2 and Figure II-4 has been developed for use in calculating the fission-product activity at time of discharge from the piles for those fission products which are still present in significant concentrations in the "cooled" metal fed to the Purex Plant. The method does not apply directly for Ru-106, for which calculation methods are discussed separately, further below.

Equation (3) has been converted to the following readily graphed logarithmic form:

$$at = \log_e \left[\frac{5000 \text{ PYE}}{5000 \text{ PYE} - W_A} \right] \quad \ldots\ldots\ldots\ldots\ldots\ldots\ldots (5)$$

For each of the fission products of interest in the Purex feed material, the above relationship has been plotted on Figure II-4. From the value of (5000 PYE)/(5000 PYE - W) read from Figure II-4 and the value of the "saturation energy" (5000 PYE) for the fission products on Table II-2, the fission-product activity may be simply calculated.

To demonstrate the use of the simplified calculation method, the Sr-89 activity previously calculated by Equation (3), above (900 megawatt-days/ton exposure obtained during 200 days pile irradiation), is determined. From Figure II-4, after 200 days in the pile for Sr-89,

$$\frac{5000 \text{ PYE}}{5000 \text{ PYE} - W} = 13.8$$

From Table II-2, the value of 5000 PYE for Sr-89 at a 1-megawatt/ton level (P = 1) is determined as 133 beta watts per ton. Since for the calculated case the value of P is 4.5 megawatts per ton instead of 1 the value becomes (4.5)(133) = 598 watts per ton for the example. Substituting and solving for W,

$$\frac{5000 \text{ PYE}}{5000 \text{ PYE} - W} = 13.8 = \frac{598}{598 - W}$$

W = 560 watts of Sr-89 beta-particle energy/ton of uranium.

4.3 Ruthenium-106

To calculate Ru-106 activity a slightly modified approach is required. The Ru-106 fission yield varies significantly with the atom fissioning. As is indicated on Figure II-3, the fission yield curves for U-235 and Pu-239 differ appreciably. In most regions of the curve (mass numbers 74 to 105 and 112 to 160) the departure of the curves is not great enough to be detected. However, for the portion of the curve from 105 to 112 the departure is great enough to produce a measurable difference, particularly at higher pile exposure levels (600 to 1000 megawatt-days/ton U). In this particular mass-number range the only fission products still present in the irradiated slug after "cooling" before processing in the Purex Plant would be 1-year half-life Ru-106, 270-day Ag-110, 40-day Ag-105, and 470-day Cd-109. Although all of these fission products are present in the irradiated fuel element fed to the Purex Plant, only Ru-106 would be of process significance. All the others would be effectively routed into the solvent-extraction wastes.

The Ru-106 fission yield from U-235 fission is 0.52% while its yield from Pu-239 is 4.7%. Because of this difference in yield a special procedure is used in calculating the Ru-106 radioactivity. The following equation has been developed for calculating the "effective Ru-106 yield." This equation corrects for the relative amounts of U-235 and Pu-239 fissioning:

$$Y_{Ru-106} = 6.4 \times 10^{-3} - 5.58 \times 10^{3} \times P + \frac{10.6 \times P \times t \times 10^{6}}{(1-e^{0.0019t})} \quad \ldots\ldots(6)$$

Values obtained for Y_{Ru-106} by using the above equation may be used in calculating Ru-106 activity in irradiated uranium by either Equations (1) or (3) above.

4.4 Simplified method for Ru-106

A simplified calculation method for Ru-106, similar to that described for other fission products above, involves the use of Figure II-5. Values of 5000 PYE determined from Figure II-5 are used in conjunction with Figure II-4 as indicated in the example below.

To determine the beta watts of Ru-106 activity in a ton of uranium after 120 days pile irradiation at a 5 megawatt per ton level, the following procedure is employed:

From Figure II-4, for Ru-Rh^{106},

$$\frac{5000 \text{ PYE}}{5000 \text{ PYE} - W} = 1.26$$

From Figure II-5 (P = 5 parameter) for Ru-Rh^{106},

5000 PYE = 300 beta watts.

Substituting and solving,

W = 62 beta watts per ton.

To convert to Ru-Rh^{106} gamma watts, multiply by the factor 0.35 shown on Table II-3.

(62)(0.35) = 22 gamma watts/ton.

4.5 Relation between beta and gamma activities and between watts and curies

After the radioactivity of the fission products of interest in the Purex Plant has been calculated in one form (e.g., beta watts, beta curies, gamma watts), conversion to other forms of interest may be simply achieved by use of the conversion factors listed on Table II-3.

5. Fission-Product Decay During "Cooling"

After the uranium has been irradiated to the proper level in the pile, the slugs are discharged and stored for a period of at least sixty days in a pile basin during which the short half-lived fission products decay to produce a "cooled" uranium feed suitable for processing in the Purex Plant.

During this "cooling" period all the short half-lived fission products decay leaving only those having relatively long half lives. Of those still remaining in the irradiated feed material fed to the Purex Plant, only a few are of process importance, the rest being routed immediately into solvent-extraction process wastes. Those of process importance are listed on Table II-2.

For most of these important fission products (except Nb-95, which is discussed separately later) the following equation may be used to determine the fraction of the specific fission-product activity remaining in irradiated uranium after a specified "cooling" period:

$$W_c = W_o\, e^{-aT} \quad \text{.....(7)}$$

where W_c = fission-product watts after "cooling" time T;

W_o = fission-product watts at pile discharge;

a = fission-product decay constant,

$= \dfrac{0.693}{\text{half life in days}}$; and

T = time since pile discharge, days.

Using a modified form of the equation,

$$\log_e \frac{W_o}{W_c} = aT \quad \text{.....(8)}$$

Figure II-6 has been prepared. This figure shows the decrease in fission-product activity with increased "cooling" time for the various fission products of interest in the Purex process. Using Figure II-6 and a value for the fission-product radioactivity at pile discharge (W_o) calculated as indicated in B4 above, the fission-product activity after a given "cooling" period may be simply calculated. For example, after 90 days "cooling" the Sr-89 activity remaining would be 31 per cent of that present at the time of discharge from the piles (W_c/W_o = 0.31).

For almost all of the fission products of importance in Purex, the half life of the parent is many times longer than the daughter in the decay chain. Consequently, the daughter decays out quickly in comparison with the parent. For such fission products, radioactivity during decay is, for all practical purposes, a function of the parent half life alone, and may be calculated by Equation (7) above or by using Figure II-6. For fission products where the parent and daughter half lives are approximately the same, the variation in radioactivity of the daughter during decay is more complex and is a function of the half lives of both the parent and the daughter. In Purex, the only fission-product decay chain of process significance where the parent and daughter half lives are approximately the same is the Zr-Nb^{95} chain where Zr-95 and Nb-95 have 65-day and 37-day half lives respectively.

To calculate the Zr-95 parent activity during cooling, Equation (7) or Figure II-6 may be used. To determine the Nb-95 activity after a given decay period, a simplified calculation method using Figure II-7 has been developed.

Calculation of the total Nb-95 activity is broken into two parts: (a) the decay of the Nb-95 present in the irradiated metal at the time of discharge from the pile is calculated from Equation (7) or by use of Curve 1 of Figure II-7; (b) the activity of Nb-95 resulting from the decay of the Zr-95 present in the irradiated metal at the time of discharge from the pile may be determined by the use of Curve 2 of Figure II-7.

The following example illustrates the use of Figure II-7 in calculating the Nb-95 activity after 90 days "cooling" in irradiated metal which contains 49 watts of Nb-95 and 163 watts of Zr-95 activity at pile discharge. From Curve 1 of Figure II-7 after 90 days "cooling" each watt of Nb-95 activity has reduced to 0.17 watts. Therefore from decay of the Nb-95 present at pile discharge 8.3 beta watts (i.e., (0.17)(49)) remain. From Curve 2 of Figure II-7 after 90 days cooling each beta watt of Zr-95 initially present has decayed to produce 0.2 beta watts of Nb-95 activity. Therefore (0.20)(163) = 32.6 beta watts of Nb-95 activity are present from Zr-95 decay. The total quantity of Nb-95 remaining after 90 days "cooling" is 8.3 plus 32.6 = 40.9 beta watts. The Nb-95 beta watts may be converted to curies or gamma watts by use of the conversion factors listed on Table II-3.

6. Fission-Product Activity in Purex "Cooled" Feed Metal

The metal processed in the Purex Plant can vary considerably in fission-product activity because of (a) variations in power level (MW/T), (b) variations in the integrated exposure level (MWD/T), and variations in "cooling" before processing. In the Hanford piles the irradiated metal could be subjected to power levels of from 3 to 10 megawatts/ton of uranium. Also the Purex Plant may be called upon to process metal which has been irradiated to integrated exposure levels varying from 200 to 1000 or more megawatt days/ton. At Hanford, although 90 days is considered the nominal "cooling" period, the Purex Plant may occasionally be called on to process irradiated uranium "cooled" as little as 70 days.

On Table II-4 activities of the fission products of importance in the Purex process have been listed for the following three specific sets of irradiation conditions:

(a) Case I - 200 megawatt-day/ton U produced by irradiating for 67 days at a pile power level of 3 megawatts/ton U and "cooled" 90 days.

(b) Case II - 600 megawatt-day/ton U produced by irradiating for 120 days at a pile power level of 5 MW/ton U and "cooled" 90 days.

(c) Case III - 1200 megawatt-day/ton uranium irradiated for 120 days at a pile power level of 10 megawatts/ton and "cooled" for 90 days.

Cases I and III were arbitrarily selected as being representative examples of the low-activity and high-activity extremes for irradiated metal potentially processed in the Purex Plant. Case II is included for comparison. From the data presented on Table II-4 it is concluded that the total activity of the feed to the Purex Plant may vary as much as 5-fold while the activity of some specific fission products may vary even more (e.g., Ru-Rh^{106} varies approximately 10-fold).

On Figure II-8 and II-9 the total beta and gamma fission-product activity variations with pile "cooling" for various irradiation conditions of interest have been presented. From Figures II-8 and II-9, it may be noted that both the total beta and gamma activity of 200 MWD/T irradiated metal produced at a 5 MW/ton level is reduced approximately two-fold by increasing the "cooling" period from 40 to 90 days.

The variation in total fission-product activity with integrated exposure level may be determined from Figures II-8 and II-9. For a pile level of 5 MW/ton and a 90-day "cooling" period the total beta and gamma activities vary as indicated below:

Integrated Exposure, Megawatt-Days/Ton	Total Fission-Product Beta Watts/Ton	Total Fission-Product Gamma Watts/Ton
200	450	450
600	1000	980
1000	1350	1220

From Figures II-8 and II-9 the variation in total fission-product activity with pile power level may be determined. For example, for irradiated metal "cooled" 90 days before processing the following variations are noted:

	Total Beta Fission-Product Watts/Ton	Total Gamma Fission-Product Watts/Ton
200-MWD/T Uranium:		
3 megawatts/ton	410	400
5 MW/T	460	440
7 MW/T	490	470
1000-MWD/T Uranium:		
5 MW/T	1380	1220
7 MW/T	1570	1500

D. SLUG HANDLING PROCEDURE

The uranium slugs are received in the 200 Areas in buckets containing about 1700 to 2100 pounds (approximately 210 to 260 eight-inch slugs) of uranium. The slugs, after storage in the water basins behind the piles for approximately 90 days, are transported to the Purex Plant by railroad flatcar. Each car is designed to carry three lead casks, each of which contains a bucket of slugs.

The uranium coming into the 202-A Building is charged directly from the cask car to the Dissolvers by means of the overhead crane. Charging of the Dissolvers is completed by the crane operator who lifts the cover off the car, unlocks the cask cover with an impact wrench, picks up the cask lid and places it on one end of the car. The bucket is then lifted from the cask, brought over the Dissolver, and lowered into the charging opening. As the crane operator continues to lower the bucket yoke, the lower lugs of the bucket catch on hooks located within the Dissolver opening, causing the bucket to tip forward and to dump the slugs into the Dissolver. Drawings of the Dissolver and of the centering lugs appear in Chapter XIII.

After the uranium (normally 10 to 12 buckets) has been unloaded, the Dissolver lid and cell cover blocks are replaced. The coating removal procedure as described in Chapter III may then be started.

Contained within the Purex building (east end of 202-A) is a water-filled basin which may be used for temporary bucket storage. Space is available for the storage of a total of 76 buckets, 40 buckets on the lower level and 36 buckets on the upper level.

A new feature of the Purex building which has been installed to facilitate Dissolver charging operations is a remotely controlled flat-car puller. In separation plants previously constructed, the train crew delivered one car to the plant which was then remotely unloaded by the train crew. In the Purex building, the train crew delivers three flatcars which are then positioned in turn by use of the flatcar puller for unloading by the crane.

Because of the relatively high radiation levels, personnel are not permitted on the Canyon deck or in the Railroad Tunnel when a cask lid is removed and Dissolver charging operations are in progress.

REFERENCES

(1) Francis Bitter, Nuclear Physics, Addison-Wesley Press, Cambridge, Mass. (1950).

(2) W. H. Hardwicke, Phys. Rev. 92, 1072 (1953).

(3) HW-17415 Activity of Fission Products. P. R. Gillette. 4/14/53.

(4) HW-18700 Redox Technical Manual. Author not stated. 8/10/51. Pp. 2602-2609.

(5) HW-28263 The Use and Calibration of Scintillation Counter - Model V. F. P. Brauer and M. B. Leboeuf. 8/1/53.

(6) HW-29028 Counting Contribution of Plutonium on GCO and GSC Instruments. U. L. Upson. 8/12/53.

(7) HW-30492 Standard Practices Counting Manual. L. C. Schwendiman. 1/4/54.

(8) HW-31295 Recommended Factors for Predicting Pu Yield and Quality. R. B. Richards. 4/16/54.

(9) HW-32786 Activity of Ru-103 and Ru-106 in Pile Fission Products. R. O. Gumprecht. 8/17/54.

(10) HW-33912 Reactivity Changes and Isotope Yields at High Exposures. J. R. Triplett. (In preparation, Feb. 1955)

(11) RH-1 The Reactor Handbook, Vol. I - United States Atomic Energy Commission, Oak Ridge (1953). Table 1.2.17, p. 118.

LIST OF TABLES AND FIGURES

TABLE II-1	COUNTING EFFICIENCIES OF THE BGO COUNTER, GAMMA SCINTILLATION COUNTER, AND THE GAMMA-RAY SPECTROMETER
TABLE II-2	FISSION PRODUCTS OF IMPORTANCE TO PUREX-PLANT OPERATION
TABLE II-3	FACTORS FOR CONVERTING BETWEEN WATTS AND CURIES
TABLE II-4	RANGE OF RADIOACTIVITIES IN IRRADIATED URANIUM PUREX FEED
FIGURE II-1	STANDARD 8-INCH CANNED URANIUM SLUG
FIGURE II-2	RATE OF PLUTONIUM FORMATION AND URANIUM-235 CONSUMPTION
FIGURE II-3	MASS DISTRIBUTION OF FISSION PRODUCTS -- U-235 and Pu-239 Fission Yield Curves
FIGURE II-4	ACCUMULATION OF FISSION PRODUCTS DURING PILE IRRADIATION
FIGURE II-5	"SATURATION" TERM (5000 PYE) FOR $Ru\text{-}Rh^{106}$ BETA ENERGY
FIGURE II-6	RADIOACTIVE DECAY OF FISSION PRODUCTS
FIGURE II-7	DECAY OF NIOBIUM-95
FIGURE II-8	IRRADIATED URANIUM "COOLING" CURVES -- Beta Watts
FIGURE II-9	IRRADIATED URANIUM "COOLING" CURVES -- Gamma Watts

TABLE II-1

COUNTING EFFICIENCIES OF THE BGO COUNTER, GAMMA SCINTILLATION COUNTER, AND THE GAMMA-RAY SPECTROMETER

Isotope	BGO Conversion Factor[a] (Shelf 2), (Counts per Minute)/Curie		GSC Conversion Factor (Shelf 1), (Counts per Minute)/Curie		Gamma-Ray Spectrometer Conversion Factor, (Gammas[c] per Minute)/Curie
	0 Absorber	25 Mg./Sq.Cm. Au Absorber	1.7 G./Sq.Cm. Pb Absorber	8.9 G./Sq.Cm. Pb Absorber	
Nb^{95}	6×10^{9}	2×10^{9}	9×10^{10}	5×10^{10}	2.22×10^{12}
$Zr\text{-}Nb^{95}$	4×10^{10}	5×10^{9}	9×10^{10}	5×10^{10}	2.22×10^{12}
$Cs\text{-}Ba^{137}$	1.3×10^{11}	4×10^{10}	8×10^{10}	4×10^{10}	1.8×10^{12}
$Ru\text{-}Rh^{106}$	1.3×10^{11}	1×10^{11}	2×10^{10}	8×10^{9}	2.4×10^{11}
$Ru\text{-}Rh^{103}$	—	—	1×10^{11}	4×10^{10}	2.2×10^{12}
I^{131}	1.6×10^{11}	4×10^{10}	8×10^{10}	1×10^{10}	1.7×10^{12}
$Ce\text{-}Pr^{144}$	1.1×10^{11}	8×10^{10}	6×10^{9}	2×10^{9}	2.7×10^{11}

Measured Activity of Plutonium and "Natural" Uranium

Instrument	Absorber	Uranium Activity/G. U (Including Saturation Amounts of UX_1 and UX_2), Co./Min.	Plutonium Activity/Mg. Pu: Pure Pu (No Am-141 Present), Co./Min.	Plutonium Activity/Mg. Pu: Aged Plutonium,[b] Co./Min.
BGO	0	7×10^{4} beta	1.7×10^{4} beta	2×10^{4} beta
	25 mg./sq.cm. Au	4.5×10^{4} beta	700 beta	1000 to 1800 beta
GSC	1.7 g./sq.cm. Pb	2.3×10^{3} gamma	416 gamma	416 gamma
	8.9 g./sq.cm. Pb	6.4×10^{2} gamma	48 gamma	48 gamma
Gamma Ray Spectrometer	—	2.0×10^{4} gamma	—	—

Notes: (a) The BGO conversion factors are significantly affected by the mounting technique employed as well as the absorption properties and amount of sample counted. For the above BGO conversion factors the sample counted contained essentially no inert materials. Hence self-absorption effects were negligible. The samples were mounted on 1-in. stainless-steel dishes and covered with a 0.0026-in. thickness of Scotch tape.

(b) The plutonium activity is a function of the amount of Pu-241 and its daughter Am-241 activity. Hence it is a function of the irradiation conditions used to produce the plutonium as well as the aging period after solvent extraction. The activities listed are for plutonium resulting from irradiation to 680 megawatt-days/ton U and aging for 18 months following solvent extraction.

(c) Gamma photons at characteristic photon energy.

TABLE II-2

FISSION PRODUCTS OF IMPORTANCE TO PUREX-PLANT OPERATION[a]

Element	% Yield[b]	Half Life	Beta Particles: Maximum Energy, M.e.v.	Beta Particles: % of Disintegrations	Gamma Photons: Energy, M.e.v.	Gamma Photons: % of Disintegrations	Q,[d] M.e.v.	Weighted Average Energy per Disintegration of Parent Atom: Beta[e]	Weighted Average Energy per Disintegration of Parent Atom: Gamma[f]	"Saturation" Energy[g]: Beta Watts	"Saturation" Energy[g]: Gamma Watts
Ru-Rh*^{103}	3.7	42 days	0.217 0.698	99 1	0.498 0.04*	99 100	0.75	0.088	0.53[k]	16.3	98
Ru-Rh^{106}	0.52	1.0 yr.	0.039 3.53[h] 3.1[h] 2.42[h] 2.0[h] ? [h]	100 68 11 12 3 6	0.513[h] 0.624[h] 0.87[h] 1.045[h] 1.55[h] 2.41[h]	40 20 1 3 1 1	3.57	1.25[i]	0.44[h]	See Figure II-5	See Text
Zr-Nb*^{95}	6.0	65 days	0.371 0.84	99 1	0.721 0.23*	99 1	1.09	0.15	0.72[k]	45	216
Nb^{95}	(c)	35 days	0.16	100	0.745	100	0.91	0.064	0.75	19.2	225
Ce^{141}	5.7	30 days	0.581 0.442	33 67	0.145	67	0.58	0.20	0.09	57	25.7
Ce-Pr^{144}	5.3	275 days	0.30 0.17 2.97[h] ? [h]	70 30 99 1	0.034 0.054 0.081 0.100 0.134 0.06[h] 0.696[h] 1.5[h] 2.19[h]	(j) (j) (j) (j) (j) (j) 1 1 1	3.304	1.28[i]	0.09[i]	337	23.8
Kr^{85}	0.32	9.4 yr.	0.695 0.15	99 0.65	0.54	0.65	0.695	0.28	0.0035	4.5	0.06
Sr^{89}	4.6	53 days	1.463	100	—	None	1.46	0.58	—	133	—
Sr-Y^{90}	5.2	20 yr.	0.61 2.18[h]	100 100	—	None	2.78	1.12[i]	—	291	—
Y^{91}	5.9	57 days	1.537	100	1.2 0.2	0.1 0.1	1.54	0.62	0.001	183	0.3
Te*-Te^{129}	0.19	32 days	1.8	100	0.106* 0.3 0.8	100 (j) (j)	—	0.72	1.2[k]	6.84	11.4
I^{131}	2.8	8 days	0.815 0.608 0.335 0.25	0.7 87.2 9.3 2.8	0.08 0.163 0.284 0.364 0.637 0.722	6.3 0.7 6.3 80.9 9.3 2.8	0.972	0.23	0.40	32.2	56
Xe^{133}	6.3	5.3 days	0.345	100	0.081	100	0.426	0.14	0.08	44	25
Cs-Ba*^{137}	6.1	33 yr.	0.523 1.17	92 8	0.661*	92	1.2	0.23	0.63	70.2	192
Ba^{140}	6.17	12.8 days	1.02 0.48	60 40	0.03 0.132 0.162 0.304 0.537	60 (j) (j) (j) (j)	1.05	0.32	0.24	98.5	74
La^{140}	(c)	40 hours	1.32 1.67 2.26 ?	70 20 10 1.3	0.093 0.329 0.487 0.815 1.60 2.50 3.0	(j) (j) (j) (j) (j) (j) 1.3	3.86	0.59	2.38	182	733
Pr^{143}	5.4	13.7 days	0.932	100	—	None	0.93	0.37	—	100	—
Nd^{147}	2.6	11 days	0.83 0.60 0.38	60 15 25	0.092 0.309 0.391 0.520	65 1 2 30	0.92	0.27	0.24	35	31
Pm^{147}	(c)	2.6 yr.	0.223	100	—	None	0.223	0.088	—	11.4	—

*) Metastable form, decaying to ground state by photon emission.

NOTES:

(a) Reference (9): RH-1, The Reactor Handbook, Volume 1, Chapter 1.2, Tables 1.2.8 and 1.2.4.
(b) Yields for thermal neutron fission of U-235.
(c) Daughter of element listed above.
(d) Mass difference, expressed in M.e.v., between initial and final systems.
(e) Weighted average of maxima multiplied by 0.4; expressed in M.e.v.
(f) Q less weighted average of beta maxima, expressed in M.e.v.
(g) 5000 PYE, where P = 1 MW/ton U, E = weighted average energy per disintegration and Y = fractional fission yield of the fission product. (See Equations (3) and (4) in text.)
(h) Activity due to daughter element.
(i) Includes energy from daughter decay.
(j) Gamma frequency uncertain.
(k) Includes energy from decay of metastable parent or daughter.

TABLE II-3

FACTORS FOR CONVERTING BETWEEN WATTS AND CURIES

Element	Watts of Gamma Per Watt of Beta	Beta Curies Per Watt of Beta	Gamma Curies Per Watt of Gamma
$Ru\text{-}Rh^{103}$	6.0[a]	1920	630[a]
$Ru\text{-}Rh^{106}$	0.35[a]	270[a]	280
Zr^{95}	4.8	1125	235
Nb^{95}	11.7	2640	225
Ce^{141}	0.45	845	1260
$Ce\text{-}Pr^{144}$	0.070[a]	265[a]	$\sim 10^3$[b]
Kr^{85}	0.0125	605	310
Sr^{89}	--	290	--
$Sr\text{-}Y^{90}$	--	300[a]	--
Y^{91}	$<$ 0.0016	275	$<$ 350[b]
Te^{129}	$\sim$ 1.7	235	$\sim$ 350[b]
I^{131}	1.73	735	450
Xe^{133}	0.57	1210	2100
$Cs\text{-}Ba^{137}$	2.7[a]	735	255[a]
Ba^{140}	0.75	530	(b)
La^{140}	4.0	290	(b)
Pr^{143}	--	460	--
Nd^{147}	0.89	625	710
Pm^{147}	--	1920	--

Notes:

(a) Daughter radioactivity included.
(b) Gamma frequency uncertain.

TABLE II-4

RANGE OF RADIOACTIVITIES IN IRRADIATED URANIUM PUREX FEED

Irradiation Conditions:

Case I - 200 MWD/ton, 67 days exposure at 3 MW/ton, 90 days "cooling".
Case II - 600 MWD/ton, 120 days exposure at 5 MW/ton, 90 days "cooling".
Case III - 1200 MWD/ton. 120 days exposure at 10 MW/ton, 90 days "cooling".

Fission Product	Beta Watts of Fission-Product Activity/Ton U			Gamma Watts of Fission-Product Activity/Ton U		
	Case I	Case II	Case III	Case I	Case II	Case III
$Ru\text{-}Rh^{103}$	7.4	16	33	44	98	195
$Ru\text{-}Rh^{106}$	15	53	141	5.1	18	49
Zr^{95}	26	64	127	125	304	609
Nb^{95}	16	40	81	185	474	948
Ce^{141}	16	34	67	7.4	15	30
$Ce\text{-}Pr^{144}$	134	364	729	9.5	26	51
Sr^{89}	71	164	328	--	--	--
$Sr\text{-}Y^{90}$	6.1	15	29	--	--	--
Y^{91}	102	235	469	--	--	--
Te^{129}	2.2	4.5	9.0	~4	~8	~15
$Cs\text{-}Ba^{137}$	2.0	2.5	5.0	4.0	7.0	14
Ba^{140}	2.1	4.0	8.0	1.6	3.0	6.0
La^{140}	4.0	7.0	14	16	28	56
Pr^{143}	3.0	5.0	10	--	--	--
Nd^{147}	0.4	0.6	1.2	0.3	0.6	1.1
Pm^{147}	2.3	4.0	8.0	--	--	--
	409	1012	2061	401	981	1974

FIGURE II-1

STANDARD 8-INCH CANNED URANIUM SLUG

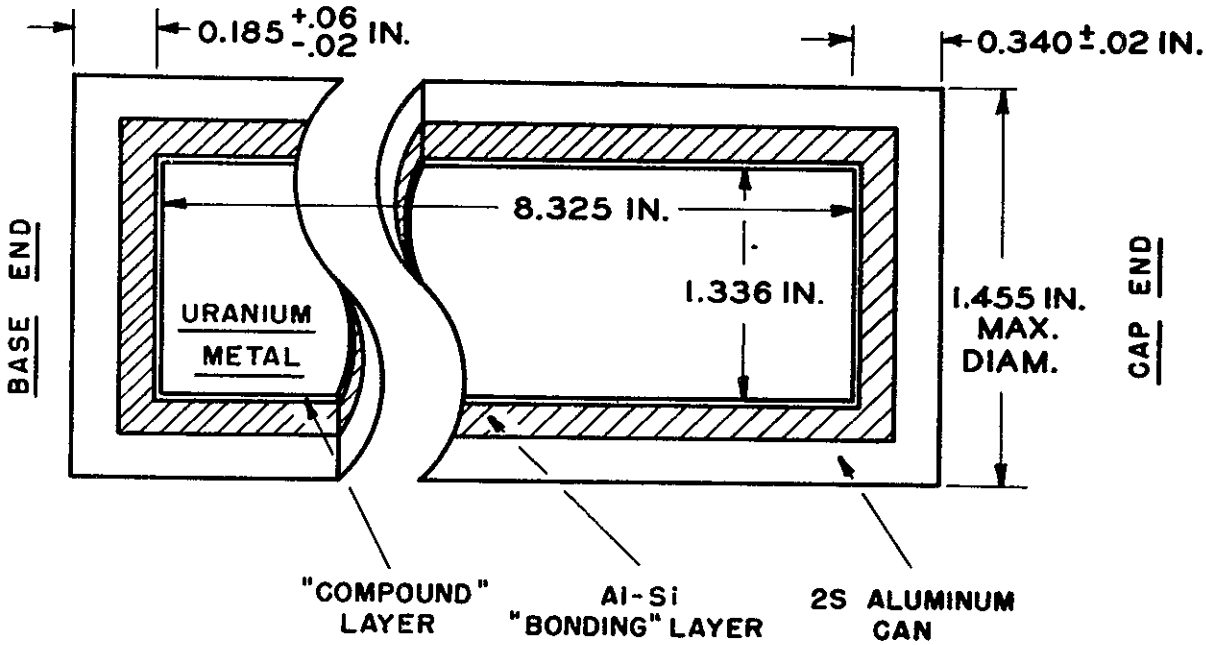

	"COMPOUND" LAYER	Al-Si "BONDING" LAYER	2S ALUMINUM CAN
Thickness	1 mil	10-25 mils	30 mils
Composition	Chiefly U, Al, Si	Si 11+% Al 87+%	Al 99.35+%

Impurities in the uranium metal, from typical analyses:

Element	Concentration Parts Per Million
Carbon	450
Nitrogen	60
Iron	50-100
Silicon	50
Cobalt, Zinc	< 100
Potassium	< 50
Copper, Aluminum	< 20
Other elements (individually)	< 10
Typical analysis for: Cd	< 1
B	< 0.2

10 -20

[redacted]

FIGURE II-2

RATE OF PLUTONIUM FORMATION AND URANIUM-235 CONSUMPTION

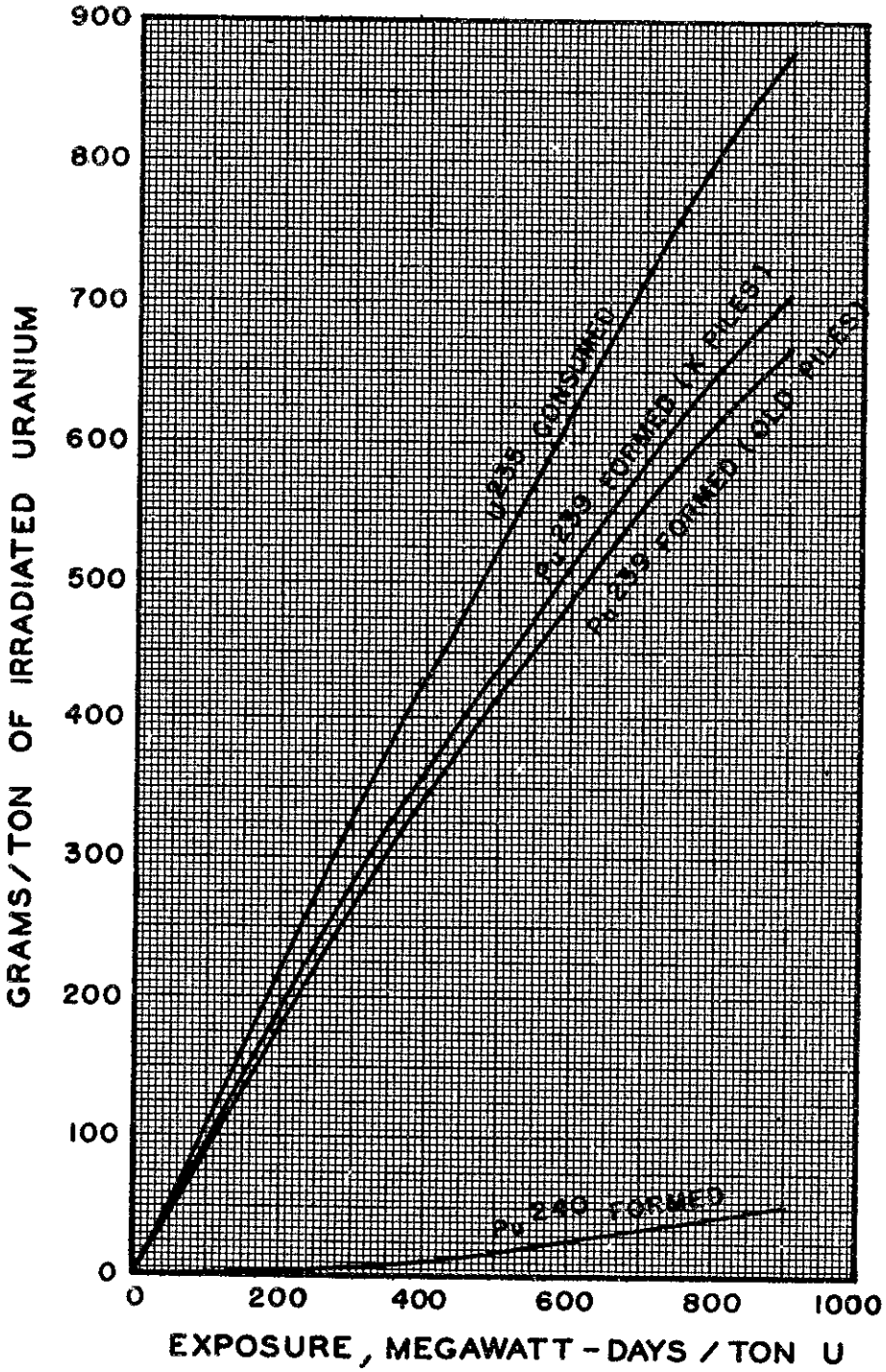

[redacted]

FIGURE II-3

MASS DISTRIBUTION OF FISSION PRODUCTS

U^{235} AND Pu^{239} FISSION YIELD CURVES

SOURCE OF DATA:

REACTOR HANDBOOK, VOLUME I, FIRST EDITION, PAGE 163.

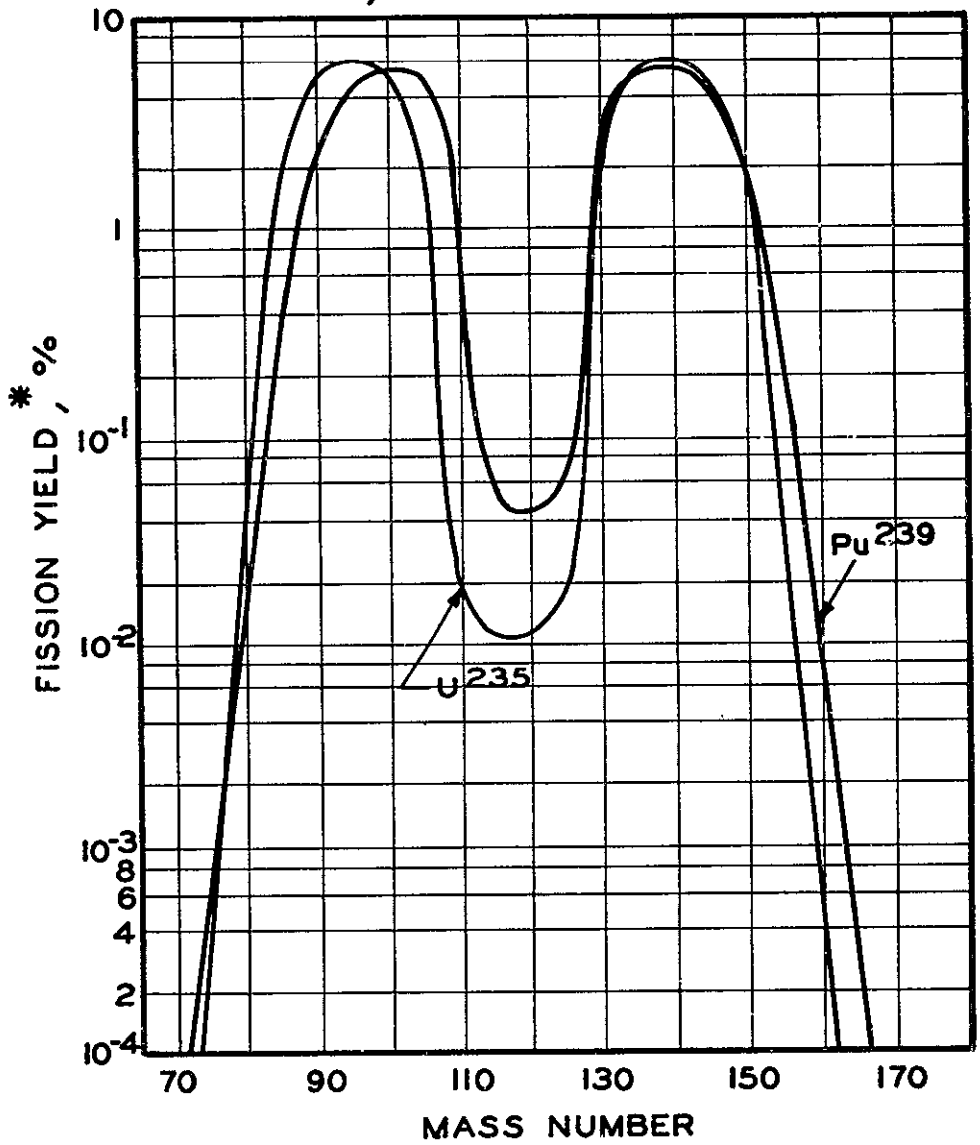

*) Fission yield is the probability of the occurrence of a fission fragment with a given mass number as the result of fission. Thus, for U^{235}, a 5.6% yield of fission fragments with mass number 135 indicates that for every 100 atoms of U^{235} which fission 5.6 fragments of mass number 135 will occur.

[redacted]

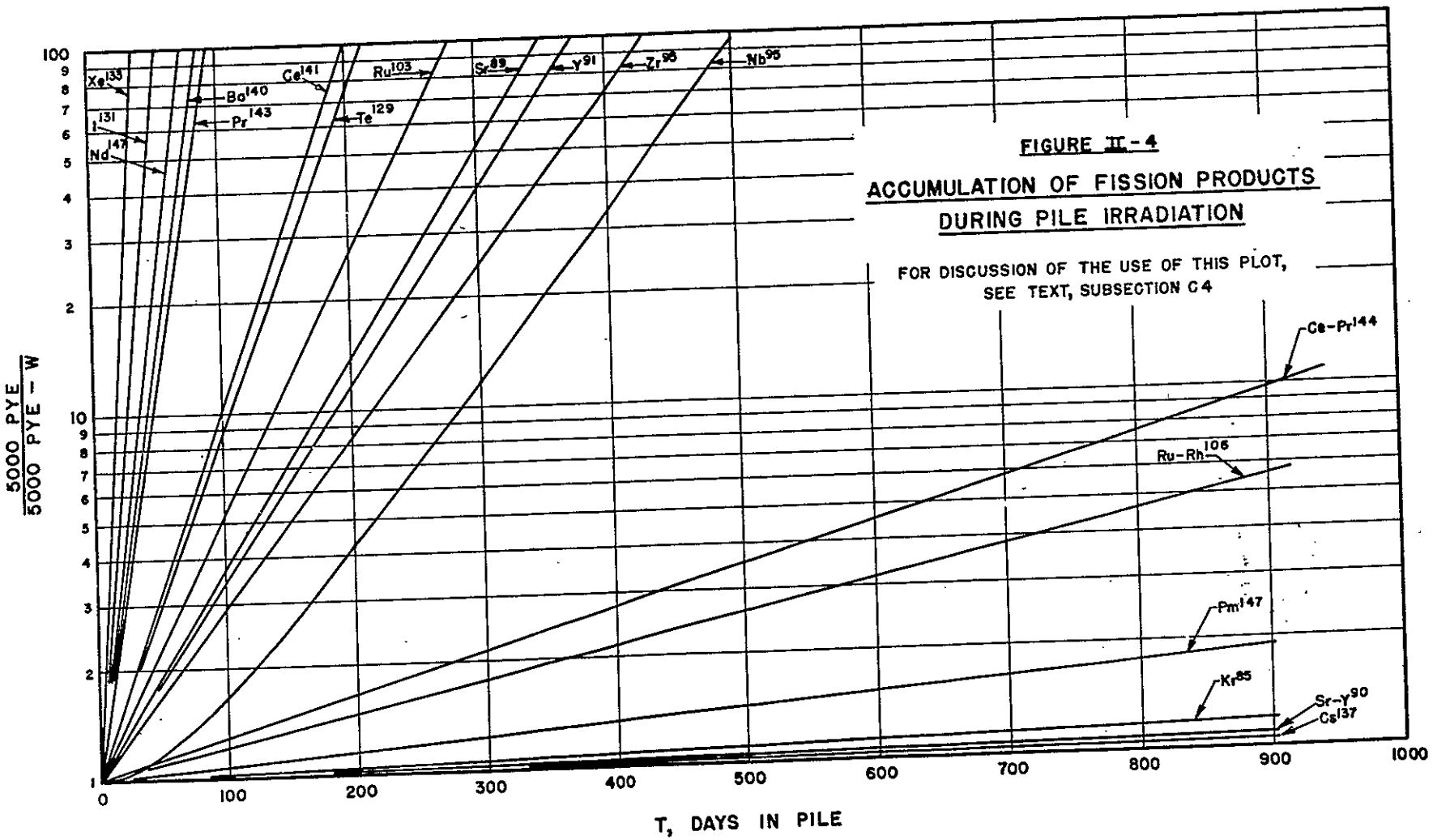

NOMENCLATURE

P = PILE POWER, MEGAWATTS / TON U.

Y = FRACTIONAL FISSION YIELD OF INDICATED FISSION PRODUCT.

E = AVERAGE ENERGY OF BETA PARTICLE OR GAMMA PHOTON FOR INDICATED FISSION PRODUCT.

W = BETA OR GAMMA RADIOACTIVITY OF INDICATED FISSION PRODUCT, WATTS / TON U.

[redacted]

FIGURE II-5

"SATURATION" TERM (5000 PYE) FOR Ru-Rh^{106} BETA ENERGY

FOR DISCUSSION OF THE USE OF THIS PLOT, SEE TEXT, UNDER C 4.3.

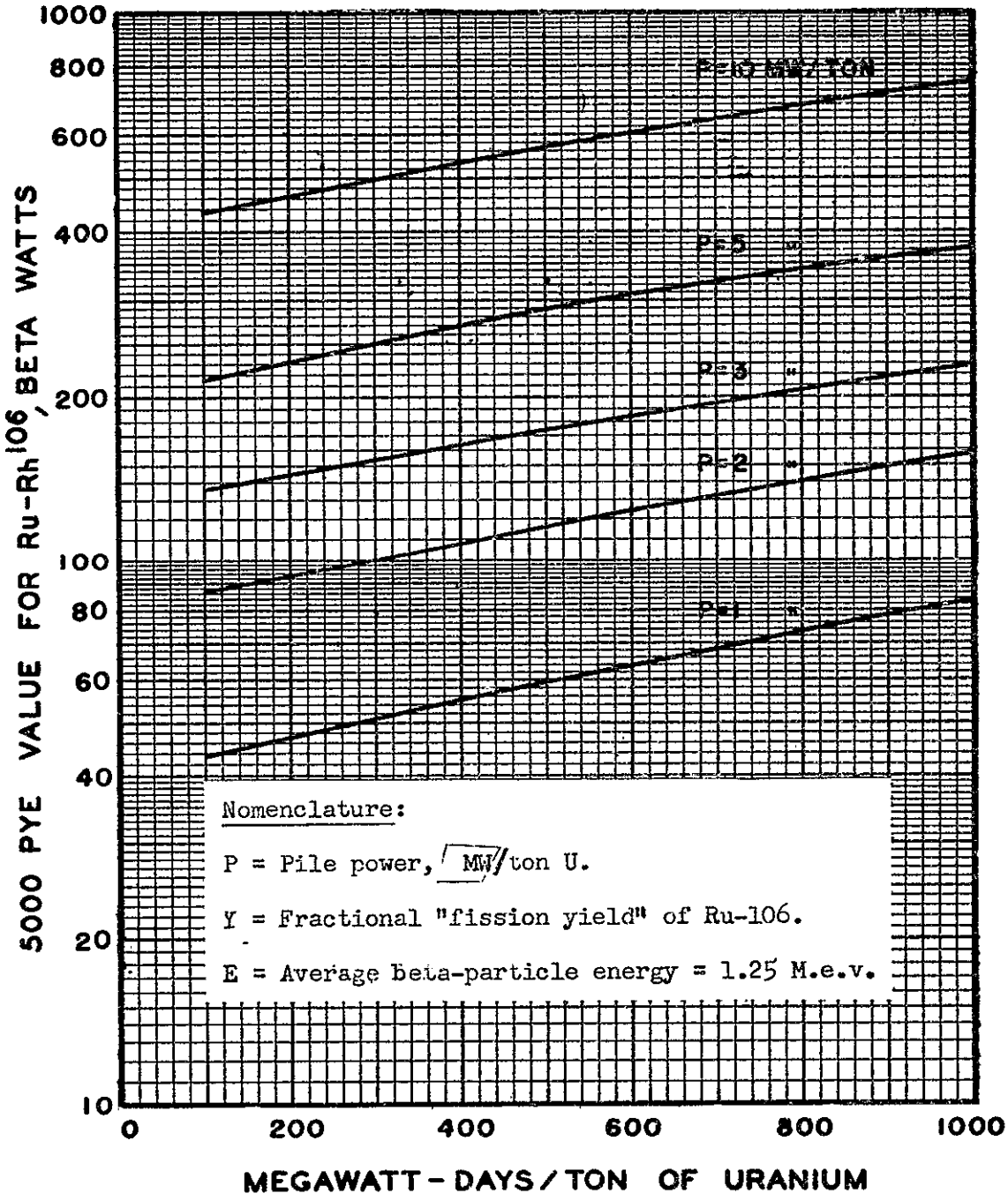

[redacted]

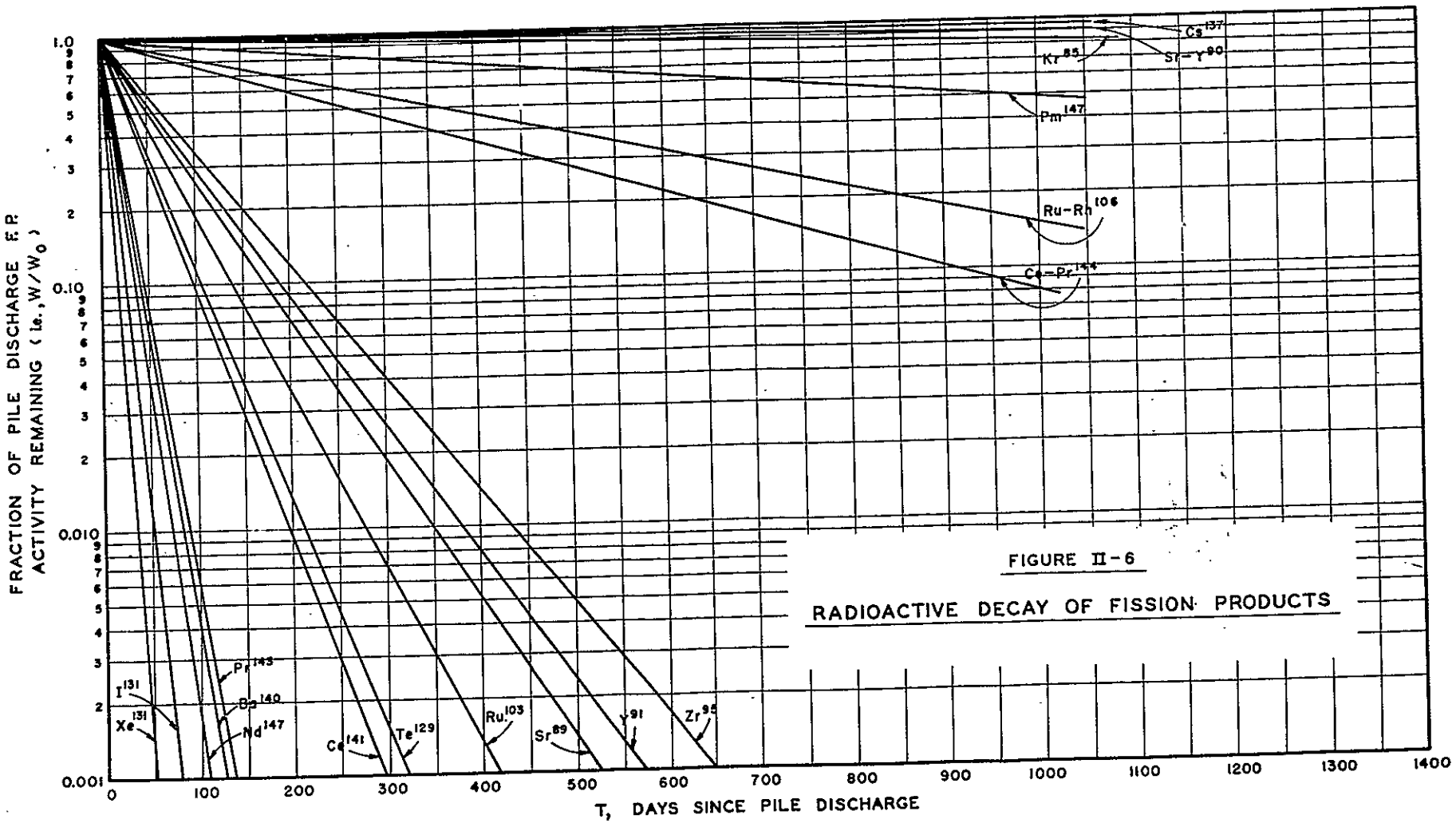

FIGURE II-6

RADIOACTIVE DECAY OF FISSION PRODUCTS

[redacted]

FIGURE II-7

DECAY OF NIOBIUM-95

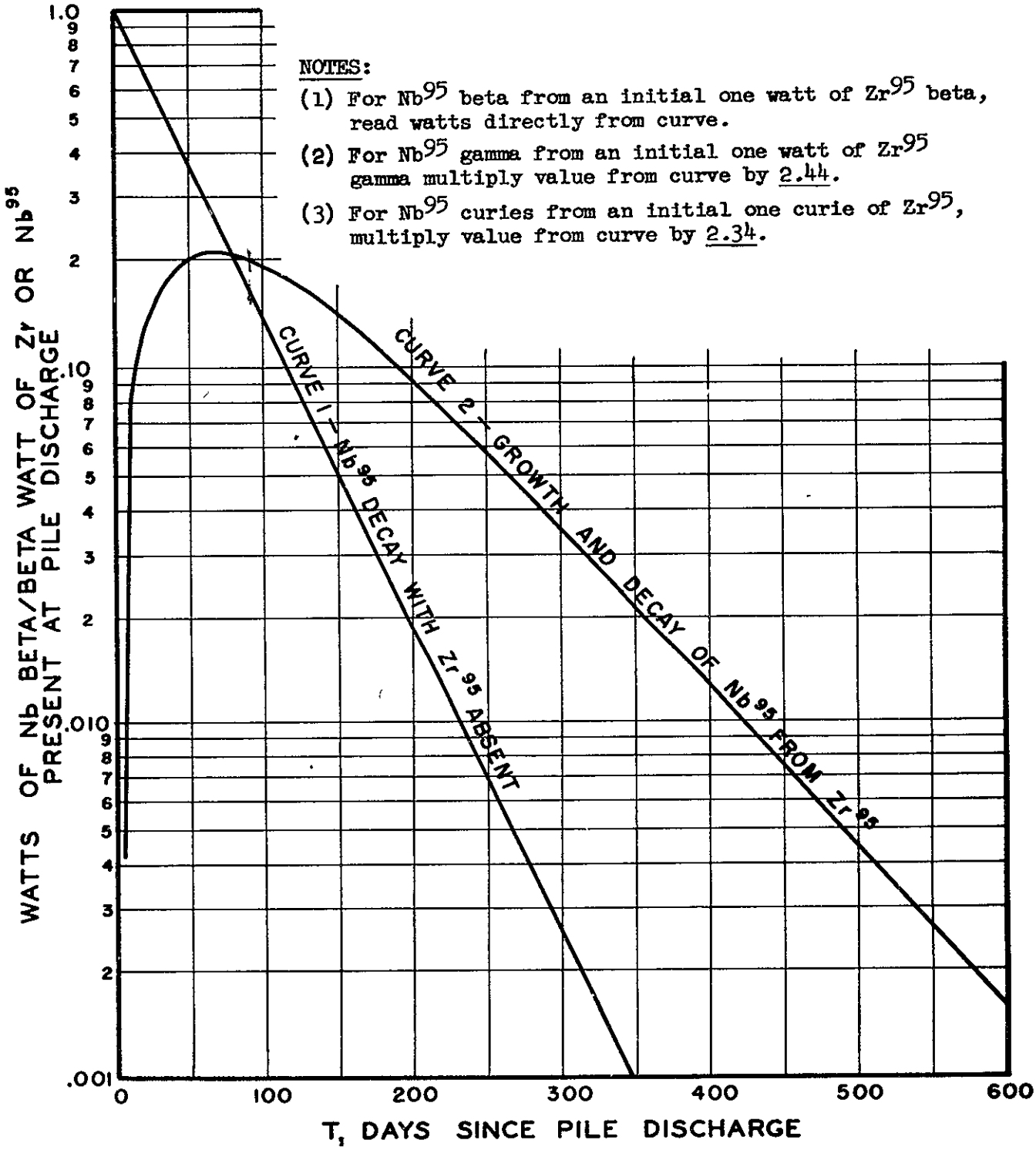

[redacted]

FIGURE II-8
IRRADIATED URANIUM "COOLING" CURVES
BETA WATTS

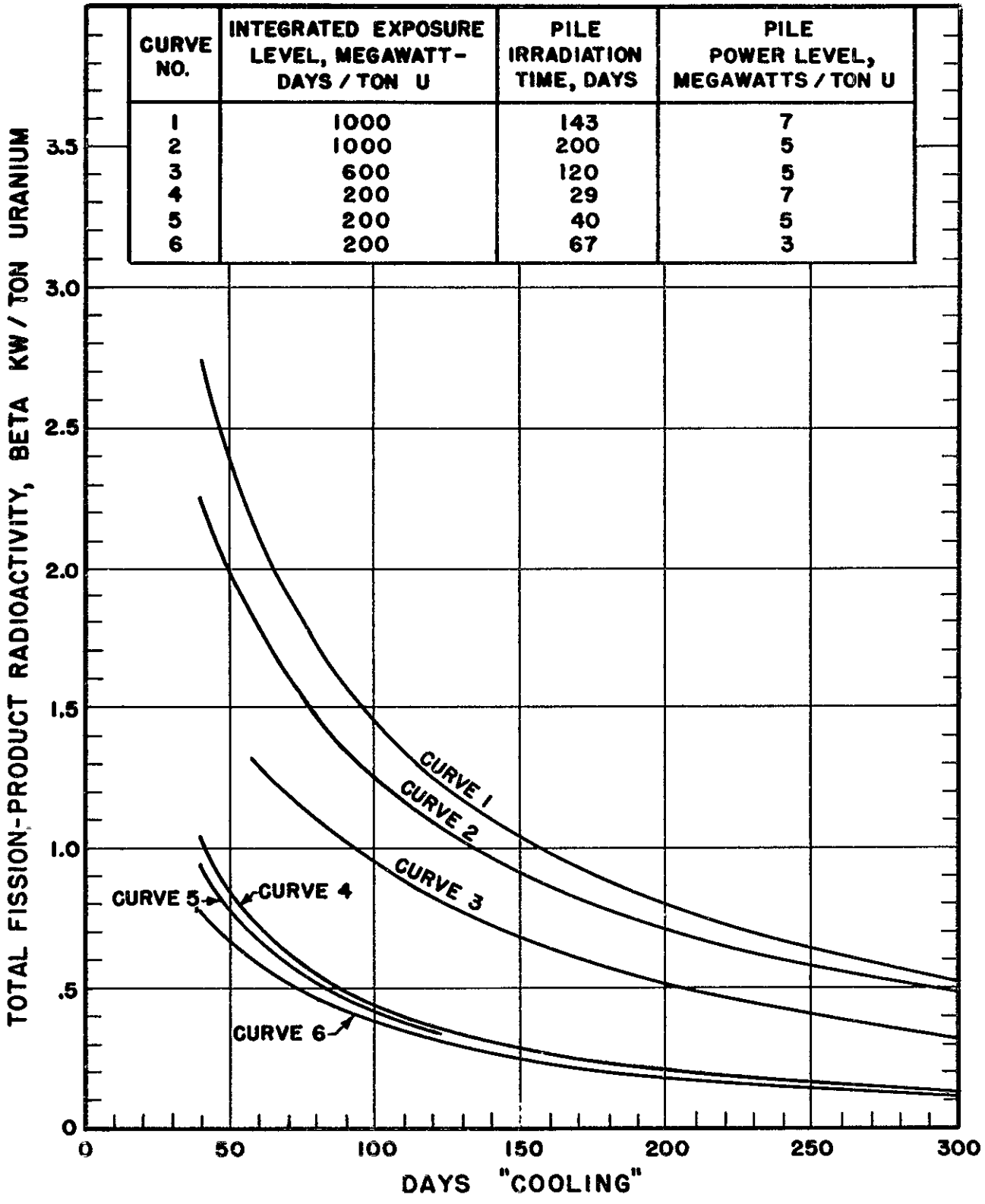

CURVE NO.	INTEGRATED EXPOSURE LEVEL, MEGAWATT-DAYS / TON U	PILE IRRADIATION TIME, DAYS	PILE POWER LEVEL, MEGAWATTS / TON U
1	1000	143	7
2	1000	200	5
3	600	120	5
4	200	29	7
5	200	40	5
6	200	67	3

[redacted]

[redacted]

FIGURE II-9

IRRADIATED URANIUM "COOLING" CURVES

GAMMA WATTS

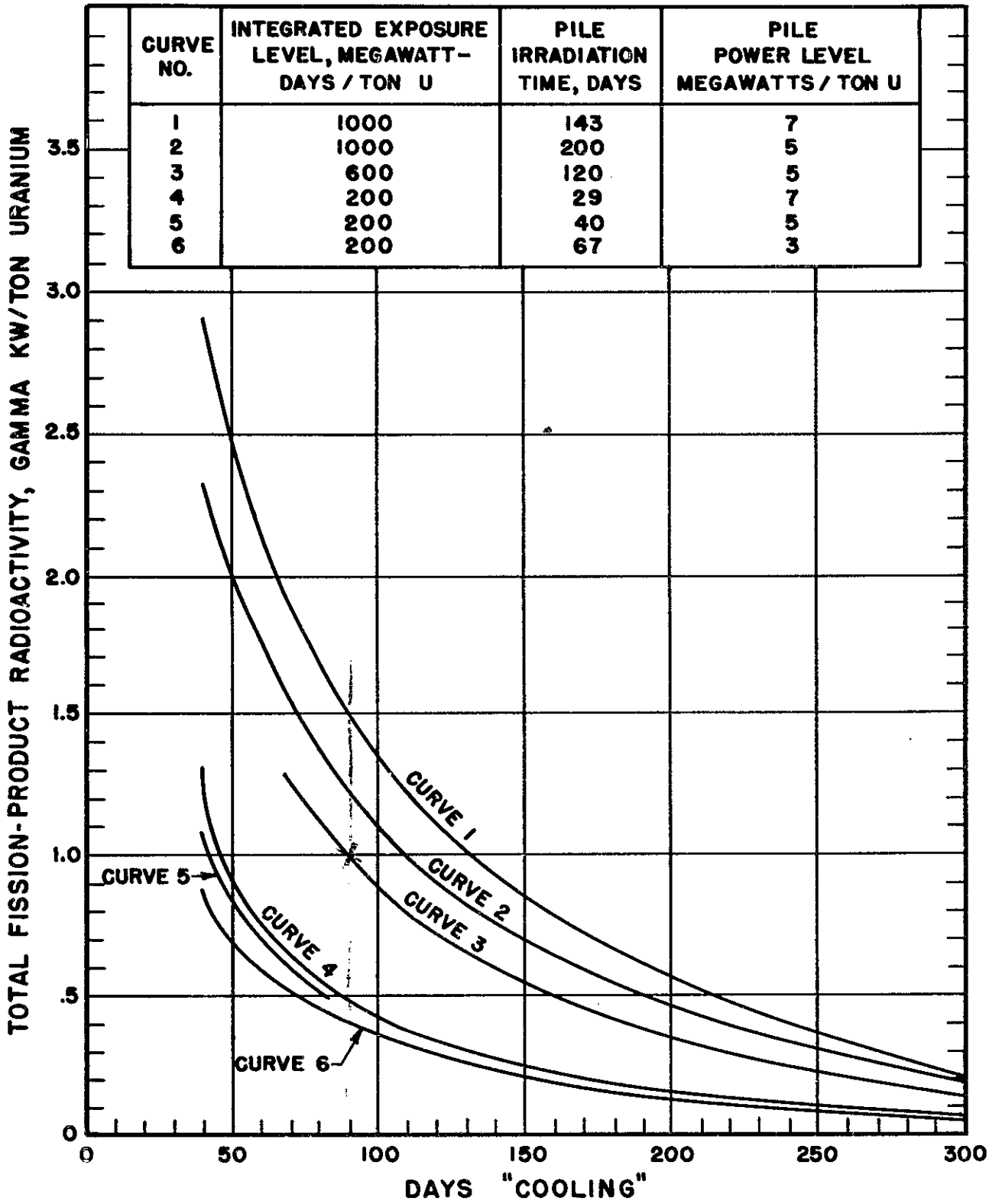

CURVE NO.	INTEGRATED EXPOSURE LEVEL, MEGAWATT-DAYS / TON U	PILE IRRADIATION TIME, DAYS	PILE POWER LEVEL MEGAWATTS / TON U
1	1000	143	7
2	1000	200	5
3	600	120	5
4	200	29	7
5	200	40	5
6	200	67	3

[redacted]

PART II: PROCESS, continued

CHAPTER III. FEED PREPARATION

CONTENTS Page

A. JACKET REMOVAL 302

1. Introduction 302
2. Caustic Jacket Removal 302
3. Acid Dejacketing 304

B. DISSOLUTION 304

1. Properties of Uranium 304
2. Chemistry of Dissolution 305
   2.1 Uranium dissolution 305
   2.2 Nitrogen oxide recovery 305
   2.3 Plutonium dissolution 306
   2.4 Fission products 307

C. OFF-GAS TREATMENT 308

1. Composition 308
2. Ammonia Scrubbers 309
3. Silver Reactor 309
4. Filters 310

D. CLARIFICATION 311

E. HEAD-END TREATMENT 311

1. Introduction 311
2. Ruthenium Volatilization 313
3. Scavenging With MnO_2 or Other Agents 313

F. CHEMICAL ADJUSTMENT 313

G. PROCEDURE 314

REFERENCES 319

CHAPTER III. FEED PREPARATION

Following a suitable "cooling" period, the irradiated fuel elements (described in Chapter II) are dissolved in nitric acid, and the dissolver solution is prepared as feed for entry into the solvent-extraction columns. The steps in the preparation of the feed which are discussed in the present chapter are removal of the aluminum slug jackets, dissolution of the slugs, off-gas treatment, head-end decontamination, centrifugation, and chemical adjustment of the feed solution. These are discussed from both chemical and process viewpoints. The dissolvers and other equipment are described in Chapter XIII. A Process Flow Diagram, Figure III-2 and Figure III-3 gives an outline of the equipment used in feed preparation and a material balance over these steps. Previous technical manuals (11, 14) described similar, but not identical, feed preparation operations. Physical properties of UNH-HNO_3 solutions are discussed in Chapter IV, Section B.

A. JACKET REMOVAL

1. Introduction

The first step in preparing the radioactive slugs for the separation of uranium, plutonium, and fission products in the solvent-extraction columns is the removal from each slug of its aluminum jacket and the aluminum-silicon bonding layer which joins the jacket to the uranium core. As for previous Hanford separation processes, the slug jackets are removed by dissolution in a sodium hydroxide-sodium nitrate solution. Although the jackets can also be dissolved in nitric acid with mercury as a catalyst, the Purex Plant has been designed for removal of the aluminum cans by the caustic jacket-removal process.

2. Caustic Jacket Removal

2.1 General

The aluminum slug jackets are removed by dissolution at the boiling temperature in a solution consisting of about 10% sodium hydroxide (3.3 M) and 20% sodium nitrate (3.0 M) under essentially the same conditions as have been used successfully in the Bismuth Phosphate and Redox Plants. The reaction of aluminum with caustic is given by the equation:

$$2\ Al + 2\ NaOH + 2\ H_2O \longrightarrow 2\ NaAlO_2 + 3\ H_2$$

In the presence of nitrate ion the evolution of hydrogen is suppressed and dissolution proceeds according to a combination of the equations:

$$8\ Al + 5\ NaOH + 3\ NaNO_3 + 2\ H_2O \longrightarrow 8\ NaAlO_2 + 3\ NH_3$$

$$2\ Al + 2\ NaOH + 3\ NaNO_3 \longrightarrow 2\ NaAlO_2 + 3\ NaNO_2 + H_2O$$

$$2\ Al + NaOH + NaNO_2 + H_2O \longrightarrow 2\ NaAlO_2 + NH_3$$

The relative amounts of hydrogen, ammonia, and nitrite ion produced are determined by the sodium nitrate excess as discussed below.

Sodium hydroxide dissolves practically all of the aluminum-silicon alloy in the bonding layer. However, there is an appreciably residue of solid material, known to be siliceous, and believed to consist in part of uranium silicides and carbides. The greater part of this solid material is removed from the dissolver with the coating waste solution. The coating waste solution normally contains less than 0.1% by weight of these suspended solids.

The pH of the coating waste solution is about 12 to 13.

2.2 Effect of sodium hydroxide concentration

Aluminum is attacked rapidly by sodium hydroxide over a concentration range of 5 to 50% NaOH. The rate of penetration, which is a measure of the reaction rate, increases with NaOH concentration from about 1.5 mm./hr. at 5% NaOH to 5 mm./hr. at 10% NaOH and to 13 mm./hr. at 15% NaOH at the boiling temperature.(59) With initial NaOH concentrations above 10% the rate of reaction is too great to be easily controlled in the plant dissolvers. The penetration rate approximately triples between 60° and 100°C.(7) Uranium losses are very slight in solutions up to 30% NaOH but become appreciable in 50% NaOH.(9)

The maximum caustic concentration which can be used is limited by the reaction rate and by the necessity of having sufficient volume of solution to cover the slugs. At a caustic concentration of 8% (with 16% $NaNO_3$ and a 1.25 NaOH/Al mole ratio) precipitation of alumina was observed after the solution had stood for several days.(9) At the normal coating-removal conditions of 10% sodium hydroxide (1.65 NaOH/Al mole ratio) and 20% sodium nitrate, a concentration of about 5% NaOH is present in the waste solution after reaction and no precipitation of Al_2O_3 occurs even after long storage periods.

2.3 Effect of sodium nitrate concentration

The presence of sodium nitrate serves to suppress the evolution of hydrogen which might otherwise constitute an explosion hazard. The relative amounts of hydrogen, ammonia, and nitrite ion produced in the presence of various concentrations of sodium nitrate are indicated in Figure III-1. Under Purex coating-removal conditions the initial $NaNO_3$/Al mole ratio is 1.5. The curves of Figure III-1 apply for an initial NaOH concentration of 15 wt. per cent, and should be taken only as qualitatively correct at other NaOH concentrations.

2.4 Slug rinsing

Following the removal of the coating-waste solution, the slugs are given two rinses to flush the dissolver of residual alkalinity and to remove additional suspended solids. While the first is water, the second may be either 5% nitric acid (to dissolve the bonding layer) or water.

The nitric acid rinse increases the uranium loss by 0.02% of the weight of metal charged. Because of the greater concentration of plutonium in the outer layers of the slugs than near the slug axis, the percentage of plutonium lost due to dissolution by the acid rinse may be substantially higher than the increase in uranium loss.[21] The type of rinse had no effect on column performance or on IAF disengaging time in the Redox Plant.

3. Acid Dejacketing

Acid dejacketing using mercury (as mercuric nitrate) as a catalyst has been studied as a possible alternative to the caustic process.[9, 10, 30, 42, 54, 59] For Redox a major saving in waste storage volume can be realized since the aluminum in the jackets can replace some of the aluminum nitrate salting agent normally used, but for Purex this advantage does not exist. Advantages of acid dejacketing for Purex are the elimination of the potential ammonium nitrate speck problem* (see Section C) and the conversion of silica to a granular form rather than the slimy form normally produced by the caustic jacket-removal procedure. In addition a 15% shorter time cycle may be possible. These advantages may be achieved by substitution of an acid dejacketing step for the current caustic dejacketing step; an additional 10% reduction in time cycle may be possible through the use of procedures in which the coating-removal solution is combined with the HAF. These latter procedures result in a heavier waste concentrator load, however, because of the limited solubility of $Al(NO_3)_3$ in HNO_3, and in potential problems during solvent extraction, due to the presence of mercury and aluminum nitrate, which have not as yet been fully evaluated.

B. DISSOLUTION

1. Properties of Uranium

Uranium is a silver-colored metal which resembles nickel in appearance and is capable of taking a high polish. The metal surface oxidizes, however, to a golden color after a few hours' exposure to air, and after several days the tarnish darkens to various shades of blue, brown, or black. The melting point of pure uranium is 1133°C., but it is lowered appreciably by the presence of small amounts of carbon. The boiling point is about 4200°C. Its specific gravity is 19.05 which is 80% greater than that of lead and approximately the same as that of gold and tungsten.[1]

Uranium metal is highly reactive and is close to beryllium in the electromotive series. Uranium turnings oxidize in air with moderate rapidity at 125°C. and when ignited will burn without a flame. The massive metal oxidizes slowly at 500°C. and rapidly at 1000°C.; consequently, an inert atmosphere is required in order to melt the metal. Powdered uranium is usually pyrophoric and a display of sparks occurs when the metal is filed or ground. Boiling water attacks the massive metal slowly and the attack by steam is more rapid than by oxygen.[1]

---

* Passage of the off-gas through an ammonia scrubber decreases the importance of this consideration.

2. Chemistry of Dissolution

2.1 Uranium dissolution

Uranium metal is oxidized by nitric acid to uranyl nitrate, $UO_2(NO_3)_2$, which crystallizes as uranyl nitrate hexahydrate (UNH). The properties of UNH solutions are discussed in Chapter IV. Under conditions of normal dissolving, uranium is oxidized quantitatively to the (VI) state.

Both nitric oxide and nitrogen dioxide are formed during the reaction. Initially, in the presence of strong nitric acid, NO_2 predominates but, as the acid concentration is reduced through reaction, the relative amount of NO increases and it becomes the principal gaseous reaction product during the later portion of a cut.[59] The equations for the reaction are frequently given as:

$$U + 4\ HNO_3 \longrightarrow UO_2(NO_3)_2 + 2\ NO + 2\ H_2O$$

$$\text{and}\quad U + 8\ HNO_3 \longrightarrow UO_2(NO_3)_2 + 6\ NO_2 + 4\ H_2O$$

but the actual mechanism is unknown. As in other oxidations with nitric acid, nitrogen dioxide or nitrous acid is the principal oxidizing agent. The relative amounts of NO and NO_2 evolved are largely determined by the equilibrium:

$$3\ NO_2 + H_2O \rightleftharpoons NO + 2\ HNO_3$$

although the NO_2/NO ratio is higher during the final half of a dissolving than would be predicted on the basis of acid concentration alone.[59] The heat of reaction is sufficient to maintain the solution at the boiling point with little or no addition of heat.

The rate of the uranium dissolution reaction increases with increase in initial nitric acid concentration, temperature, and surface area of the slugs.[28, 38, 59] The rate is not affected by the addition of small concentrations (up to 0.001 M) of mercuric ion.[19] Slight improvements in the initial dissolution rate have been noted with the addition of sulfates and fluorides.[44] Addition of phosphate ion improves the uranium dissolution rate at high-acid conditions, such as prevail in the early stages of the dissolution, but impairs the rate at lower-acid conditions, such as prevail in the later stages.[38] Semiworks studies indicate the dissolution should normally be complete after about five or six hours at the boiling point.[3, 46]

2.2 Nitrogen oxide recovery

In the Purex Plant a downdraft condenser is used to achieve efficient scrubbing of nitrogen oxides from the off-gases. In a downdraft condenser the off-gases and condensed reflux flow cocurrently down the tower so that the full volume of reflux scrubs the gas during its entire residence in the tower. Furthermore, the reflux is coolest, and, therefore, most effective for scrubbing, at the off-gas exit. Air is introduced to oxidize nitrogen

oxide to nitrogen dioxide which is absorbed by water to form nitric acid. At the temperature of the condenser the equilibrium

$$2\ NO + O_2 \rightleftharpoons 2\ NO_2$$

strongly favors the formation of NO_2 and the rate of the oxidation is very rapid.(59) The absorption of NO_2 (largely polymerized to N_2O_4 at 20°C.) by water gives nitrous acid or nitric oxide in addition to nitric acid.

$$2\ NO_2 + H_2O \rightleftharpoons HNO_3 + HNO_2$$

$$3\ NO_2 + H_2O \rightleftharpoons 2\ HNO_3 + NO$$

The acid consumption in a downdraft dissolving is about 2.5 to 3.0 moles HNO_3 per mole U dissolved.(3, 46) Depending on the NO/NO_2 ratio in the off-gas, the stoichiometric air requirement for the oxidation is seven to twelve standard cubic feet of air per pound of uranium dissolved when the acid-to-uranium mole ratio is about three.(3)

In a conventional updraft reflux condenser the ascending off-gases pass countercurrently to the descending liquid reflux. In such equipment the off-gases are not efficiently scrubbed by the reflux since the volume of reflux in the top of the tower is small and the temperature lower in the tower is high, a condition unfavorable to the formation of NO_2 from NO. The nitric acid consumption is about 5.0 to 5.5 moles of acid per mole of uranium with an updraft condenser.

2.3 Plutonium dissolution

In the presence of a uranium heel, nitric acid dissolves plutonium to form predominantly Pu (IV) nitrate, although a small fraction of the plutonium may be present in the dissolver solution in the III and VI valence states -- mainly through disproportionation of Pu (IV) upon standing. The dissolution of plutonium, like that of uranium, proceeds by several competing mechanisms. The following equation may represent a greatly simplified statement of the reaction by which Pu (IV) nitrate is formed:

$$Pu + 8\ HNO_3 \longrightarrow Pu(NO_3)_4 + 4\ NO_2 + 4\ H_2O$$

The Pu (IV) is present principally as the simple tetrapositive plutonium ion, Pu^{+4}, and also to some extent in the form of complex ions such as $Pu(NO_3)^{+3}$. However, if the dissolving is carried to acid-deficiency,* K.A.P.L. data(52) indicate that some Pu (IV) polymer may be formed and that a larger fraction of the Pu may be converted to the Pu(III) oxidation state. The forms of plutonium present in nitrate solutions are discussed in Chapter IV.(8, 52)

---

*) A solution containing -x M HNO_3 (x M acid deficient) would become stoichiometrically neutral upon addition of x moles of HNO_3 per liter of solution. The pH of acid-deficient uranyl nitrate solutions of interest is, however, still on the acid side. (E.g., a 2 M uranyl nitrate solution, 0.2 M acid deficient has a pH of approximately 2.)

Normally the dissolution reaction is stopped while the solution is still stoichiometrically slightly acidic, in order to prevent the formation of Pu (III) and of the insoluble Pu (IV) polymer, which is redissolved only with difficulty and may be lost during centrifugation and/or solvent extraction. The stabilization of the plutonium valence in the desired IV state is discussed under Chemical Adjustment (Section F, below).

Since plutonium is not uniformly distributed throughout an irradiated slug but is more concentrated near the surface, the amount of plutonium dissolved in successive cuts decreases. The presence of a heel of partially dissolved slugs in the dissolver at the time of charging tends to increase the uniformity of the plutonium concentration in successive cuts.

2.4 Fission products

Elements produced by the fission of uranium-235 are present in the slug in approximately the same total weight as that of plutonium. A wide variety of radioactive elements, principally of intermediate atomic number, are present. (See Chapter II.) Acid-insoluble materials are present in only very small quantities and do not require special treatment. Volatile radioelements appear in the off-gas and hence require consideration during dissolution. (See Section C.)

The three principal volatile radioactive fission products are Kr-85, Xe-133, and I-131. Iodine is of greatest importance since it tends to concentrate in living tissue while the others do not. The amount of iodine evolved during dissolution is markedly affected by the dissolving conditions such as temperature, sparge-air flow rate, acid concentration, and presence of mercury.[17,20,25] It is refluxed in the condenser as long as a strong nitric acid solution is present but passes into the off-gas as the nitric acid is depleted and is then almost completely removed from the off-gases by the silver reactor.

The conditions of dissolution can have an influence on the subsequent solvent-extraction behavior of the principal non-gaseous radioelements. Because of their relative difficulty of decontamination by solvent extraction under Purex conditions, the most important of these fission products are ruthenium, zirconium, and niobium. Their chemical behavior in dissolver solution is imperfectly understood but laboratory studies have been made of their solvent-extraction behavior after various dissolution procedures.[36, 49] These studies indicated that extended dissolving time or dissolving to a high final acidity (3 to 6 $\underline{M}$ HNO_3) probably results in poorer decontamination from niobium and zirconium during solvent extraction. A temporary interruption of a dissolution by cooling results in poorer Nb decontamination but Ru and Zr are unaffected. Sparging with air, NO_2, or NO during dissolution has no effect on decontamination. Updraft and downdraft dissolvings appear to give approximately the same results in solvent-extraction studies, but the data are inconclusive.

C. OFF-GAS TREATMENT

1. Composition

The gases from the dissolver (including air in-leakage) during jacket removal and during dissolution have approximately the compositions given in the following table:

	Weight Per Cent					
	O_2	N_2	NH_3	NO_2	NO	H_2O
Jacket Removal	21.8	71.8	5.0	-	-	1.4
Dissolving	14.4	71.1	-	1.3	7.6	5.6

Although the nitrogen oxides have been given as NO and NO_2, other molecular species and hydrates are also present. In addition to the components listed, other gases such as H_2, CO_2 (from carbon impurities in the uranium), and the radioactive fission-product gases I_2, Kr, and Xe are also present in small amounts. Under normal operating conditions the amount of gas sent to the stack is about 600 pounds per ton of uranium during jacket removal and 1500 pounds per ton charged during each of the two dissolving cuts. The approximate radioactivity associated with the volatile fission products from slugs with typical irradiation and "cooling" histories is given in the following table:

OFF-GAS FISSION-PRODUCT RADIOACTIVITY
600 MWD/T, 180 days exposure

	Fission Yield, %	Half Life	Total (Theoretical) Curies per Ton Uranium	
			60-Day "Cooling"	90-Day "Cooling"
Kr-85	0.33	9.4 yr.	312	310
I-131	3.0	8.0 days	465	35
Xe-133	4.7	5.3 days	52	1

Under normal updraft conditions about 50% of the iodine is evolved from the dissolver but only about 0.1% of that evolved passes through the silver reactor to the atmosphere. The amount of iodine in the off-gas from a downdraft condenser has not been determined. It may be only a fraction of the iodine evolved from the dissolver,[57] because of scrubbing in the condenser. Iodine in dissolver solution probably co-exists in the three forms, I^-, I_2, and IO_3^-, as long as metallic uranium is present.[17] Nitric acid tends to oxidize I^- or I_2 to IO_3^- while metallic uranium reduces I_2 or IO_3^- to I^-.

The krypton and xenon are completely evolved and pass to the atmosphere. Because of the long half-life of krypton-85 (9.4 years) eventual slight contamination of the earth's atmosphere with this element will occur. However, it would take the continuous development of about 10^5 megawatts of nuclear power to bring the atmosphere of the earth (assuming uniform dilution) to an equilibrium concentration of Kr-85 equivalent in activity to that associated with the radon and thoron naturally present in the atmosphere.

2. Ammonia Scrubbers*

In earlier Redox-Plant experience the formation of highly radioactive particles of NH_4NO_3 has occurred when ammonia produced in one dissolver during dejacketing has combined with nitrogen oxides and water vapor in the off-gases of a second dissolver. In the Purex Plant ammonia scrubbers are installed in the off-gas lines from the three dissolvers as a precaution to help minimize this potential radioactive contamination hazard.(43) Water is employed as the scrubbing liquid. The scrubbers are described in Chapter XIII. Each scrubber is a 30-inch diameter tower, seven feet high, with three bubble-cap trays.

The diameter of the scrubber tower is dictated by an approximately 6-in.-H_2O pressure-drop limitation imposed by the characteristics of the off-gas jet. Even though during dissolution the scrubber is operated dry, the controlling pressure drop occurs during dissolution rather than during coating removal, because of the high peak off-gas flow rate occurring during dissolution (approximately 700 cu.ft./min., as compared with approximately 23 cu.ft./min. for the coating-removal off-gas).

The scrubbers are designed to reduce the maximum ammonia content of the off-gas to approximately 0.06 weight per cent when using a water flow of 8 gallons per minute.

The expedient of air addition to the coating-removal off-gas is available if needed to increase the total gas flow for improved scrubber plate efficiency. However, the addition of air to the coating-removal off-gas would increase the gas-film-controlled resistance to mass transfer of the NH_3. The relative magnitude of these two opposing effects, as observed in plant operation, will determine whether (and, if so, to what extent) air addition to the coating-removal off-gas is advantageous for increasing the fraction of entering NH_3 removed by the scrubber.

3. Silver Reactor

A silver reactor is provided for each dissolver for the removal of radioiodine from the off-gases since this element would constitute a serious health hazard if allowed to escape to the atmosphere. A description of the units is given in Chapter XIII.

Iodine reacts rapidly at high temperature with silver or silver nitrate to form silver iodide. The over-all reaction with silver nitrate is probably

$$6\ AgNO_3 + 3\ I_2 + 3\ H_2O \longrightarrow 5\ AgI + AgIO_3 + 6\ HNO_3$$

but the mechanism has not been investigated.

---

*) The information presented in this subsection is provisional. At the time of writing, a tentative decision to include ammonia scrubbers of the indicated design in the Purex Plant was subject to firming up.

The reactors, 4-1/2 ft. in diameter, are packed to a depth of 8 ft. with 1/2-in. silver nitrate-coated ceramic Intalox saddles. Gases from the downdraft condenser are heated to about 350°F. by passage through a heat exchanger which is supplied with 185-lb./sq.in.ga. steam. The optimum temperature in the reactor is 300 to 425°F.[22] Below 220°F., nitric acid and water condense and remove silver nitrate by dissolution. Furthermore, the rate of reaction for iodine removal is considerably lower than at the normal operating temperature. The upper allowable temperature is fixed by the melting point of silver nitrate at 413°F. At this temperature the salt becomes a liquid with a viscosity of approximately 6 centipoises. Sustained operation above or below the optimum temperature range results in failure of the reactor. Efficiencies of about 99.9% for the removal of iodine from the Bismuth Phosphate and Redox off-gases by silver reactors have in general been obtained since their installation. The efficiency of iodine removal at a given point in the bed remains at a high level (95 to 99+%) until the silver available for reaction at that point is 40 to 50% depleted. Redox-Plant experience has indicated, however, that less than one per cent of the silver nitrate is utilized, probably as a result of the formation of a silver iodide layer.

Depleted reactors may be regenerated with silver nitrate solution. Extrapolation from Redox and Bismuth-Phosphate-Plant experience with smaller reactors[23] indicates that Purex-Plant-size (4.5-ft.-diameter, 8-ft.-packed-height) silver reactors will require two 50-liter flushes of 5 M $AgNO_3$, followed by a 6-hr. drying period at 220°F. after each flush addition. After the second drying period the bed temperature is raised to the normal operating point, 350 to 375°F., for two hours to insure the complete removal of water.

4. Filters

Off-gases from each dissolver are routed through a fibrous glass filter before discharge to the stack, as shown in the Process Flow Diagram, Figure III-1. The filter installation is described in Chapter XI.

The off-gases from the dissolvers, like the ventilation air from the cells, contain a small concentration of entrained solid or liquid particles (0.01 to 0.03 grams/1000 cu.ft. for ventilation air). Although the dissolver off-gases contain about 15 times as much radioactivity per unit volume as the ventilation air, the distributions of particle sizes in the two gases are similar, and the filtration characteristics required are comparable. Approximately 80 to 90% of the radioactivity associated with particles in the gas is held on particles with diameters between 0.1 and 1.0 microns.[18] Particles of this size can be removed with an efficiency of 99.9 to 99.99% by a graduated Fiberglas (glass wool) filter of the type used in the Purex Plant and with an efficiency of about 99.5% by a sand filter constructed with graduated layers of gravel and sand from 2 in. size to 30 mesh (2 ft. of 30 mesh sand) such as is used at the Redox Plant for ventilation air.[16,18,29,40] The collection efficiency of a glass wool filter depends on the fiber diameter, the bed depth, the density of the bed, and the air velocity, as well as on the diameter of the particles being removed from the gas stream.

Although the Fiberglas off-gas filters are susceptible to damage by water (principally by dissolution of a sodium silicate binder) they have performed satisfactorily in the Bismuth Phosphate Plant since 1950 when they were installed, and in the Redox Plant since start-up[41] with only one filter failure. For the filtration of ventilation air, fibrous glass filters offer several advantages over sand filters besides their greater efficiency. They cost considerably less ($382,000 against $900,000). The initial pressure drop through the filter is less (4 inches of water against 7 inches for a sand filter). The plot area required is less (4300 sq.ft. against 30,800).[40] For off-gas use, the same advantages are realized. In practice, a series of glass wool filters of graduated fiber size is used so that larger particles are trapped by the first, relatively coarse filters and do not clog the later fine interstices. With such an arrangement, the expected life is greater than one year for an off-gas filter.

D. CLARIFICATION

Although most of the solid particles left after dissolution of the Al-Si bonding layer are disposed of in the coating waste, dissolver solution contains a small amount of fine solid material. Most of this is removed by a centrifugation step using a Bird 48-in. solid-bowl centrifuge operating at 1500 r.p.m. The equipment is described in Chapter XIII. The solids present in dissolver solution are mainly siliceous. The silica may be present in several forms, such as silicic acid, elemental silicon, and insoluble uranium silicides.[6] The solids are residues from the "bonding" layer and impurities from the uranium core.

The presence of the suspended solid particles may make phase separation in the solvent-extraction columns more difficult and increase the tendency toward emulsion formation. In Redox and Uranium Recovery systems, siliceous materials are particularly detrimental. On the other hand, the presence of quite large amounts of some solids such as Al_2O_3 or corrosion products appears to have only a relatively small effect on emulsification.[35]

There are several methods by which dissolver solution might be clarified. In addition to centrifugation with no scavenging agent, centrifugation with a scavenging agent or filtration with or without a filter aid might be used. Centrifuges are favored over filters in the Purex Plant because fewer mechanical difficulties are anticipated and because considerable experience has been gained in the operation of centrifuges in the $BiPO_4$ and Redox Plants. Centrifugation with scavenging agents is discussed in Section E.

E. HEAD-END TREATMENT

1. Introduction

No head-end treatment for the removal of specific fission products is included in the Purex flowsheet and no ruthenium scrubbing equipment is available in the plant for carrying out a ruthenium volatilization type of treatment.

Although changes in plant operation could conceivably make such a step advisable at a future time, the three cycles of solvent extraction for decontamination of both uranium and plutonium are expected to prove adequate in the Purex Plant. On the basis of laboratory and "hot" pilot-plant studies of the Purex process, the over-all decontamination of the plutonium and recovered uranium after three cycles of solvent extraction is predicted to be limited by zirconium-niobium activities, with ruthenium contributing up to 10 per cent of the residual gamma activity.(51) As discussed in Chapter XI, a location has been designated at the Purex Plant for the installation of a silica-gel tail-end cleanup step for removing residual zirconium-niobium from the recovered uranium solution if such a supplementary decontamination procedure should ever be needed. The following discussion of head-end treatments is included to provide background information and to indicate references to detailed treatments of head-end process data in other documents.

Head-end treatments such as mentioned briefly below are designed to remove a major portion of those fission products which are most difficult to remove by solvent extraction and which comprise the principal residual radioactivity in the final products. The sources of residual radioactivity after two Purex solvent-extraction cycles as determined from pilot-plant runs are shown in the following table:(60)

Fission Product	Percentage of Residual Radioactivity			
	Gamma		Beta	
	Pu*	U	Pu	U
Ru	32	31	73	71
Zr	27	11	16	14
Nb	41	58	8	7
Others	0	0	3	8

*) Calculated from second-cycle feed composition and individual beta decontamination factors.

Essentially all of the radioactivity is due to the three components ruthenium, zirconium, and niobium; consequently, head-end treatments have been developed for the removal of one or more of these three elements.

The type of head-end procedure which has been most seriously studied involves the volatilization of ruthenium as RuO_4 and the scavenging of zirconium and niobium on solids which are removed by centrifugation. Co-precipitation of ruthenium, accompanied by scavenging of zirconium and niobium, has also been investigated.

2. Ruthenium Volatilization

Ruthenium can be oxidized by strong oxidizing agents, such as permanganate ion or ozone, to ruthenium tetroxide, RuO_4, which is volatile (b.p. = 135°C.[4]) and which can be removed from the solution by evaporation or by sparging with a gas (e.g., with air). In the processes used at both Hanford (Redox) and Knolls Atomic Power Laboratory (Purex pilot plant for Savannah River) potassium permanganate has been the oxidizing agent employed but the conditions employed at the two sites have differed in some respects.[61, 62] Modifications of the K.A.P.L. process, which utilizes a single addition of permanganate and a four-hour simmer at 80°C., are expected to be used at the Savannah River Purex Plant.

3. Scavenging with MnO_2 or Other Agents

Manganese dioxide formed by reduction of permanganate is an efficient adsorbent for zirconium and niobium and can be used to effect a removal of these elements during centrifugation. In the Redox Plant, where the precipitation of MnO_2 is carried out in slightly acidic solutions (ca. 0.1 M HNO_3), decontamination factors of two to three are achieved when 0.01 M MnO_2 is left undissolved.

The Redox Plant, however, is restricted to a low scavenging efficiency by lack of centrifugation capacity which limits the concentration of MnO_2 which can be employed.

The removal of zirconium-niobium (and some ruthenium) from Purex dissolver solution by scavenging on a suspended solid material such as MnO_2 might be accomplished in existing Purex-Plant equipment provided a suitable process is ultimately developed which does not volatilize ruthenium from solution. All potential scavenging agents which have been tested to date for this purpose[24, 34, 45, 52, 56] appear to have serious disadvantages either in chemical cost, potential process hazards, or in process uncertainties. The volatilization of ruthenium accompanying MnO_2 scavenging can be diminished as much as 10 to 100-fold below the fraction volatilized by the Redox-type head-end process if the MnO_2 is formed by a "reverse strike" procedure (adding manganous nitrate or chromic nitrate to the dissolver solution prior to addition of $KMnO_4$), or by preforming the MnO_2 before addition to the dissolver solution. However, to date these techniques have not succeeded in quantitatively preventing the evolution of ruthenium from solution. Hence before such an MnO_2 scavenging step could be adopted, new equipment would be required in the Purex Plant to adsorb or absorb whatever ruthenium is volatilized and carried out of the reaction vessel in the vent gas. Future research and development studies may succeed, however, in developing a scavenging head-end process for the Purex Plant in the event such a step is needed or economically attractive.

F. CHEMICAL ADJUSTMENT

In the chemical adjustment step the uranium and nitric acid concentrations are adjusted to 1.35 M and 2.00 M, respectively, and the plutonium valence is stabilized in the IV state with $NaNO_2$. Of the three common valences of plutonium, Pu (IV) is the one most readily complexed by TBP and hence the one most desirable for solvent extraction.

Plutonium in acid dissolver solution is present principally as Pu (IV) but Pu (III) or Pu (VI) may also be present in small amounts.[52] Although Pu (IV) is the form most easily extracted with TBP, Pu (VI) is only slightly more difficult to extract (see Chapter IV) and the presence of a small fraction of Pu (VI) in the feed would not lead to undue losses in the HAW stream of the HA Column. Pu (III), on the other hand, is only weakly complexed by TBP and would be lost in the aqueous waste stream.

Nitric acid solutions of plutonium contain a number of different species (see Chapter IV) because of the formation of nitrate complexes and of disproportionation and oxidation reactions. Nitrous acid, from the addition of sodium nitrite or nitrogen dioxide, stabilizes the plutonium in the IV valence state by reduction of Pu (VI) and oxidation of Pu (III).[2,55,61] Both reactions are rapid and are essentially complete within a few minutes at 70°C under normal plant conditions. Higher temperatures lead to decomposition of the nitrous acid and to oxidation of Pu (IV) by nitric acid. The stability of nitrous acid also decreases with increasing acidity.[5] The reduction of Pu (VI) by nitrous acid is slow in the absence of a catalyst but the reaction is rapid if U (VI), Pu (IV), or Fe (III) is present; it appears to involve a series of reduction and disproportionation steps.[55] The need for a valence adjustment treatment has been questioned at O.R.N.L. and A.N.L.,[5,60] and this step may be found unnecessary in plant practice.

A variable amount of iodine is expected to be released during the chemical adjustment step and a silver reactor is included in the vent system to prevent its escape to the atmosphere.

G. PROCEDURE

1. Normal Procedure

1.1 Process Flow Diagram

A Process Flow Diagram of the feed preparation steps is given in Figure III-2. The figure shows the principal pieces of equipment, associated process piping, pumps, jets, agitators, and instrumentation. For dissolving, the principal equipment comprises three Dissolvers (designed for 8.33 tons of uranium per charge each) and three parallel off-gas systems each consisting of a downdraft condenser (Dissolver Tower) and De-Entrainment Tower, an Ammonia Scrubber, a Silver Reactor, and an Off-Gas Filter. Each Dissolver discharges to a separate 5000-gal. Metal Solution Tank and to a common 5000-gal. Coating Waste Tank. Dissolver solution from the metal solution tanks is jetted to a 5000-gal. Centrifuge Feed Tank and subsequently to two parallel Feed Centrifuges which normally operate at 1500 G. The overflow from the centrifuges is caught in a 4000-gal. Catch Tank and from there is sent to a 4000-gal. HAF Make-Up Tank. The various pieces of equipment are described in Chapter XIII.

1.2 Sequence of steps

The flow of materials through the feed preparation steps is shown in a Material Balance Flow Diagram, Figure III-3. The weights given are based on a nominal instantaneous plant processing rate of ten tons of uranium per day. Following the charging of slugs, jackets are removed by dissolution in a $NaOH$-$NaNO_3$ solution. The solution is jetted to underground storage via the Coating Waste Tank. After rinsing with water the slugs are dissolved in two cuts with nitric acid. The off-gases, after passage through a silver reactor and a glass wool filter, are discharged to the atmosphere. The feed is centrifuged and brought to HAF specifications through the addition of nitric acid, sodium nitrite, and water.

1.3 Jacket removal and dissolving

At a uranium processing rate of 10 tons per day, two Dissolvers are used routinely with the third as a spare. Each Dissolver operates on a 48-hour schedule as follows: slug charging (10 tons, 12 buckets), 6 hours; jacket removal and rinsing, 8 hours; first cut (5 tons), 10 hours; second cut (5 tons), 14 hours; slack time, 10 hours. A heel of 10 tons is normally carried in each Dissolver. Between runs it is covered with about 2500 gallons of water but, prior to charging, the heel cover is jetted to the Rinse Tank and is replaced with 11,570 lb. of 26% sodium nitrate solution. The slugs are charged, the Dissolver cover replaced, and the solution heated to boiling using the air sparger for agitation. Water flow to the Ammonia Scrubber is started at a rate of 8 gallons per minute and continued until the end of the coating-removal step. Air is admitted to the Dissolver at a controlled rate of about 100 cu. ft./min. in order to provide sufficient gas flow for efficient scrubber operation. The 3220 lb. of 50% sodium hydroxide solution is then added at a rate of less than 20 lb. per min. (The rate of addition is limited by the reaction velocity.) The sparger is turned off and the solution is digested at the boiling point for three hours following completion of the caustic addition. A vacuum of 10 to 15 inches of water is maintained throughout the operation to prevent leakage of fumes from the Dissolver to the cell. An auxiliary jet comes on if the vacuum falls to 7 inches of water. The solution is cooled to 35°C. with coil cooling water using the air sparger for agitation and is then jetted to the Coating Waste Tank. The slugs are rinsed with two 3890-lb. water rinses which are also sent to the Coating Waste Tank. The aqueous effluent from the Ammonia Scrubber is cribbed via the Stack Drain Catch Tank. If the dissolution is not to be started immediately, the heel cover solution is jetted back to the Dissolver.

To initiate the dissolution of the dejacketed slugs the heel cover, if present, is jetted to the Rinse Tank, air introduction is begun, and the 14,000-lb. charge of 58% nitric acid is added. Recovered acid is normally used. Some heating through the Dissolver coil may be necessary to initiate the reaction but, once begun, it proceeds quite rapidly. During the first three hours after addition of the acid, 5540 lb. of water is gradually added through the tower. By adding the water in this manner, the reaction is speeded up through the use

of a higher initial acid concentration in the pot than would be present if the water were added to the pot along with the acid. Furthermore, the water scrubs the initial off-gases in the tower during the time before boiling is reached when no reflux from the pot is available for that purpose. Heating through the coils is normally required during the latter portion of the dissolution to maintain sufficient boiling to provide adequate reflux for efficient scrubbing in the tower. The vacuum should not be allowed to fall below 10 inches of water. The dissolution is continued until the rate of rise of specific gravity is less than 0.02 per hour. At this time 1930 lb. of water from the Rinse Tank is jetted to the Dissolver to cool and dilute the solution and it is transferred to the Metal Solution Tank for storage. A second cut is made by the same procedure and the two solutions combined in the Metal Solution Tank in preparation for centrifugation or head-end treatment. The heel in the Dissolver is covered with water from the Rinse Tank if another charging is not to be made immediately.

1.4 Centrifugation and feed adjustment

The two Feed Centrifuges installed in the Purex Plant normally operate in parallel with half of the dissolver solution going to each. Centrifugation is carried out at 1500 G. At the normal feed rate of 2 gallons per minute, the holdup time is about 45 minutes. The centrifuge cake, which will be allowed to build up for several batches (about 3 to 5), is washed two or three times with water and very dilute acid, and is slurried out of the bowl with water. The cake washes are combined with the feed in the Centrifuge Catch Tank.

The centrifuged dissolver solution is ready for feeding to the HAF Column after additions of sodium nitrite (864 lb. of 10% solution) nitric acid (12,578 lb. of 58.3% solution), and 6,024 lb. of water. The solution is digested at about 50°C. for one hour following the nitrite addition in order to allow time for the conversion of plutonium to the Pu (IV) valence state. A trace of ferric nitrate may speed the reaction if necessary. Following the valence adjustment the nitric acid and water are added to bring the feed to the HAF specifications shown on the Material Balance Flowsheet.

1.5 Off-gas treatment

Off-gases from the Dissolver after leaving the condenser and De-Entrainment Tower pass through a heat exchanger, the Silver Reactor, and a Fiberglas glass wool filter before discharge to the stack. In the heat exchanger the gases are heated by steam to 350 to 375°F., the normal operating termperature of the Silver Reactor. The equipment should require little maintenance other than periodic regeneration of the Silver Reactors. Regeneration is by a procedure similar to that described in Subsection C3.

1.6 Effect of processing rate on procedure

The foregoing procedure discussion has been confined to a 10-ton/day uranium processing rate. Operations at typical rates other than 10 tons per day necessitate alterations in the Dissolver utilization and scheduling as shown in the following table:

Operation	8.3 T/D, 2 Dissolvers		10 T/D, 2 Dissolvers		16.7 T/D, 3 Dissolvers	
	Material Processed, Tons	Time, Hr.	Material Processed, Tons	Time, Hr.	Material Processed, Tons	Time, Hr.
Slug charging	8.33 (10 buckets)	5	10.0 (12 buckets)	6	11.1 (14 buckets)	7
Jacket removal and rinsing		8		8		8
First cut	4.16	10	5.0	10	5.55	10
Second cut	4.16	14	5.0	14	5.55	14
Slack time		11		10		9
Total Dissolver cycle time		48		48		48

At 3 tons per day only one dissolver would be required.

Although the two centrifuges are normally operated in parallel, each should be capable of handling the total volume of solution at a 16.7-ton U/day rate (with a reduced holdup time). At the 16.7-ton/day rate, using both centrifuges, the feed jets (rated at 2 gal./min.) would have to operate at 3.5 gal./min.; Redox-Plant experience indicates they should be capable of delivering more than 3.5 gal./min. One centrifuge operating at the 16.7 ton/day rate would require the use of the spare feed jet in addition to the normal jet.

2. Off-Standard Conditions

2.1 Excessive fission-product activity in the stack

With no head-end ruthenium oxidation the principal type of excessive radioactivity in the stack will be radioiodine which may result from failure of a silver reactor or the processing of short-"cooled" slugs. Although the reactors are replaced periodically, an occasional unit may fail because of poor regeneration or through melting or leaching of the silver nitrate coating if the temperature of the incoming gas should be too high or too low. A unit found defective is regenerated or replaced.

2.2 Solids in the HAF

The passage of silica or other solids through the Feed Centrifuge may be due to mal-operation of the centrifuge or to the formation of a colloidal type of material in the feed. Solids in the feed may lead to emulsification and entrainment in the extraction columns or to plugging and sticking of valves and other equipment. They are usually removed by digestion and recentrifugation.

2.3 Excessive centrifuge cake losses

Losses of uranium or plutonium greater than 0.1% in the centrifuge cake, if due to insufficient washing of the cake, may be recovered by recentrifuging the slurry followed by adequate washing of the cake. High plutonium losses may be due to the formation of Pu (IV) polymer as a result of dissolving or neutralizing to acid deficiency. High HAW losses may also indicate polymer formation. The polymer may be difficult or impossible to redissolve in the head-end tanks since strenuous hot oxidizing conditions are required.

2.4 Too rapid dissolving reaction

Too rapid a dissolution is indicated by an unusually high pressure in the Dissolver as a result of the rapid evolution of reaction product gases. Because the acid is gradually diluted with water at the beginning of a cut, few instances are anticipated. If cooling water in the coils will not reduce the reaction rate sufficiently, water in the Drowning Tank may be dropped into the Dissolver to arrest the reaction.

REFERENCES

(1) Katz and Rabinowitch, The Chemistry of Uranium, McGraw-Hill, N.Y. (1951).

(2) Seaborg, Katz, and Manning, The Transuranium Elements, Part I, McGraw-Hill, N.Y. (1949).

(3) T. F. Evans and R. E. Tomlinson, Private communications re 321-Building downdraft dissolver tests. H.A.P.O. December, 1954.

(4) ANL-4463 Chemical Engineering Division Summary Report, January, February, and March, 1950. S. Lawroski and C. E. Stevenson.

(5) ANL-4872 Chemical Engineering Division Summary Report, April, May, and June, 1952. S. Lawroski and C. E. Stevenson. 8/1/52.

(6) ANL-4922 Chemical Engineering Division Summary Report, July, August, and September, 1952. S. Lawroski and C. E. Stevenson.

(7) CN-1584 Process Development and Chicago Semi-Works Operation. A. C. Hyde et al. 4/15/44.

(8) CN-1702 Chemical Research, Basic Chemistry of Plutonium, Report for Month Ending June 1, 1944. G. T. Seaborg et al.

(9) CN-2021 Recommendations for Process Conditions at Hanford Engineer Works and Review of Process Chemistry, Summary Report. M. F. Acken. 10/1/44.

(10) GEH-19220 Coating Removal Report. R. V. Coplan et al. 12/11/51.

(11) HW-10475 HEW Technical Manual, Section C. Author not stated. 5/1/44.

(12) HW-14702 Exploratory Scavenging Studies for the Decontamination of Redox Solutions. W. E. Roake. 5/1/50.

(13) HW-18415 Decontamination from Ruthenium by Ozonization in the Redox Process. C. F. Callis et al. 7/25/50.

(14) HW-18700 Redox Technical Manual. Author not stated. 7/10/51.

(15) HW-20287 Decontamination of Redox Feed Solutions by Super Filtrol Scavenging. W. E. Roake and H. G. Hicks. 9/1/50.

(16) HW-20332 Decontamination of Dissolver Vent Gases at Hanford. A. G. Blasewitz et al. 2/16/51.

(17) HW-20803 Removal of Iodine from Aqueous Solutions by Sparging. C. H. Holm. June, 1951.

[redacted] [redacted]

(18) HW-20847 Filtration of Radioactive Aerosols by Glass Fibers. A. G. Blasewitz et al. 4/16/51.

(19) HW-20863 Quarterly Report, January through March, 1951, Chemical Research Section. O. F. Hill and F. J. Leitz. 4/16/51.

(20) HW-21103 Retention of Iodine in Process Solutions by Mercuric Salts. C. H. Holm. 6/15/51.

(21) HW-21442 Final Report, Production Test 221-B-8, Coating Removal Waste Loss Reduction. R. E. Kirkendall. 6/25/51.

(22) HW-21826 Variation in Silver Reactor Performance. A. G. Blasewitz and B. F. Judson. 8/3/51.

(23) HW-21957 Performance of Replacement and Regenerated Silver Reactors Operated at 375°F. A. G. Blasewitz. 8/20/51.

(24) HW-22076 Laboratory Demonstration of Redox Feed Head-End Treatment, Ruthenium Volatilization and Manganese Dioxide Scavenging. H. G. Hicks, C. G. McCormack, and W. E. Roake. 7/15/51.

(25) HW-22138 Quarterly Report, July through September, 1951, Chemical Research. O. F. Hill and F. J. Leitz. 10/1/51.

(26) HW-23312 Behavior of Iodine in the Redox Process. J. S. Kane et al. 1/21/52.

(27) HW-24901 Progress Report, Chemical Development, June, 1952. F. W. Woodfield. 6/30/52.

(28) HW-25635 Progress Report, Chemical Development, August, 1952. F. W. Woodfield. 8/31/52.

(29) HW-26489 Alternative Filter Equipment for Ventilation Air of Separations Plants. A. G. Blasewitz. 12/8/52.

(30) HW-26650 Report of Discussions at ORNL. A. M. Platt and D. P. Granquist. 12/24/52.

(31) HW-27131 Potassium Permanganate Decomposition. C. E. Michelson and W. N. Carson, Jr. 2/16/53.

(32) HW-27298 Progress Report, Chemical Development, February, 1953. F. W. Woodfield. 2/28/53.

(33) HW-27644 Progress Report, Corrosion Tests of Stainless Steels in Solutions Containing Sulfide Ions. N. Endow. 4/7/53.

(34) HW-27727 Quarterly Progress Report, Chemistry Unit, January, February, March, 1953. A. H. Bushey. 4/30/53.

(35) HW-27807 The Vibrational Method for Measuring Dispersion and Disengaging Time and Its Application to the Study of Emulsion Problems. R. H. Moore and J. E. Mendel. 4/21/53.

(36) HW-27970 Progress Report, Chemical Development, April, 1953. F. W. Woodfield. 4/30/53.

(37) HW-28628 Ruthenium Scavenging with Inorganic and Organic Sulfur Compounds. R. L. Moore et al. 6/26/53.

(38) HW-28995 Phosphate Catalysis in Nitric Acid Dissolutions of Uranium Metal. R. L. Moore et al. 7/31/53.

(39) HW-29792 Processing Capacity of the Purex Plant. A. M. Platt and R. J. Sloat. 11/3/53.

(40) HW-30142 Comparative Study of Alternative Fibrous Glass and Sand Exhaust Ventilation Air Filter Installations for Purex. L. L. Zahn, Jr. 12/14/53.

(41) HW-30337 Review of Exhaust Ventilation Air Filtration Requirements for Purex. L. L. Zahn, Jr. 12/23/53.

(42) HW-30838 Application of the Mercury-Catalyzed Aluminum Jacket Dissolving Technique to the Redox Process. M. H. Curtis et al. 12/11/53.

(43) HW-30856 Facilities Required for Elimination of Possible Ammonium Nitrate Emission Problem at Purex. L. L. Zahn, Jr. 2/15/54.

(44) HW-31630 Quarterly Progress Report, Chemistry Unit, January, February, March, 1954. A. H. Bushey. 5/1/54.

(45) HW-31757 Progress Report, Chemical Development, April, 1954. F. W. Woodfield. 4/1/54.

(46) HW-31767 Hot Semiworks Redox Studies. T. F. Evans and R. E. Tomlinson. 1/27/54.

(47) HW-32034 Progress Report, Chemical Development, May, 1954. F. W. Woodfield. 5/28/54.

(48) HW-32164 Review of Redox-Plant Head-End Treatment. G. R. Kiel. 6/17/54.

(49) HW-32212 Effects of Dissolving Conditions on Fission-Product Behavior in Purex. W. W. Schulz and R. A. Watts, Jr. 6/25/54.

[redacted]

[redacted]

(50) HW-32331 Ruthenium Process Chemistry Considerations, Redox Process. M. K. Harmon, C. G. McCormack, R. L. Moore, and A. S. Wilson. 6/10/54.

(51) HW-33479 Ruthenium in the Purex Process. R. E. Tomlinson and F. J. Leitz. 10/14/54.

(52) KAPL-314 A Survey of Developments in Plutonium Process Chemistry for 1948-1949. H. W. Alter and E. L. Zebroski. 3/17/50.

(53) KAPL-461 Separations Processes, Progress Report. November, December 1950, January, 1951. KAPL staff.

(54) KAPL-631 Separations Processes, Progress Report, August, September, October, 1951. KAPL staff.

(55) KAPL-714 Separations Processes, Progress Report, November, December, 1951, and January, 1952. KAPL staff. 4/17/52.

(56) KAPL-795 An Investigation of the $KMnO_4$-MnO_2 Head-End Procedure for the Removal of Ruthenium and Niobium-Zirconium. J. K. Davidson et al. 8/22/52.

(57) KAPL-826 Report of the Chemistry and Chemical Engineering Section for August, September, October, 1952. Author not stated.

(58) KAPL-1002 Report of the Chemistry and Chemical Engineering Section for August, September, and October, 1953. Author not stated. 1/11/54.

(59) ORNL-1208 Recovery of Nitrogen Oxides and Rare Gas Fission Products from the Nitric Acid Dissolution of Irradiated Uranium. A. T. Gresky. 4/30/53.

(60) ORNL-1519 Terminal Report for the ORNL Pilot Plant Investigation of the Purex Process. J. M. Chandler and D. O. Darby. 2/5/54.

(61) TID-2012 Reactor Science and Technology, Vol. 4, No. 1, Pp. 9-36, 37-64, March, 1954.

(62) H-2-54132 Process Flow Diagram - Metal Solution Feed Preparation - Sheet 1.

(63) H-2-54133 Process Flow Diagram - Metal Solution Feed Preparation - Sheet 2.

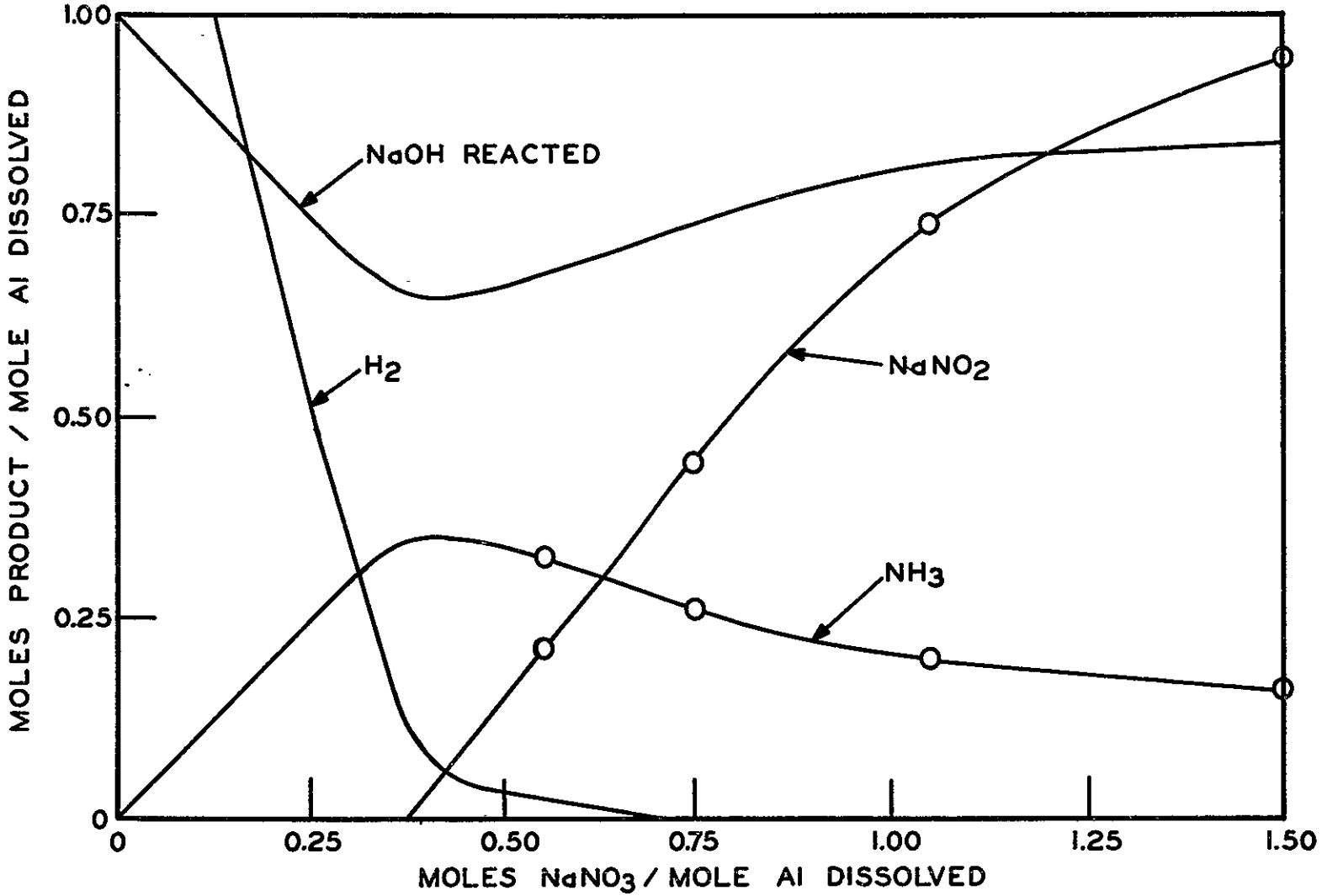

FIGURE III-1

SODIUM HYDROXIDE JACKET REMOVAL

EFFECT OF SODIUM NITRATE

INITIAL NaOH CONCENTRATION = 15% — SOURCE OF DATA - ORNL 1208

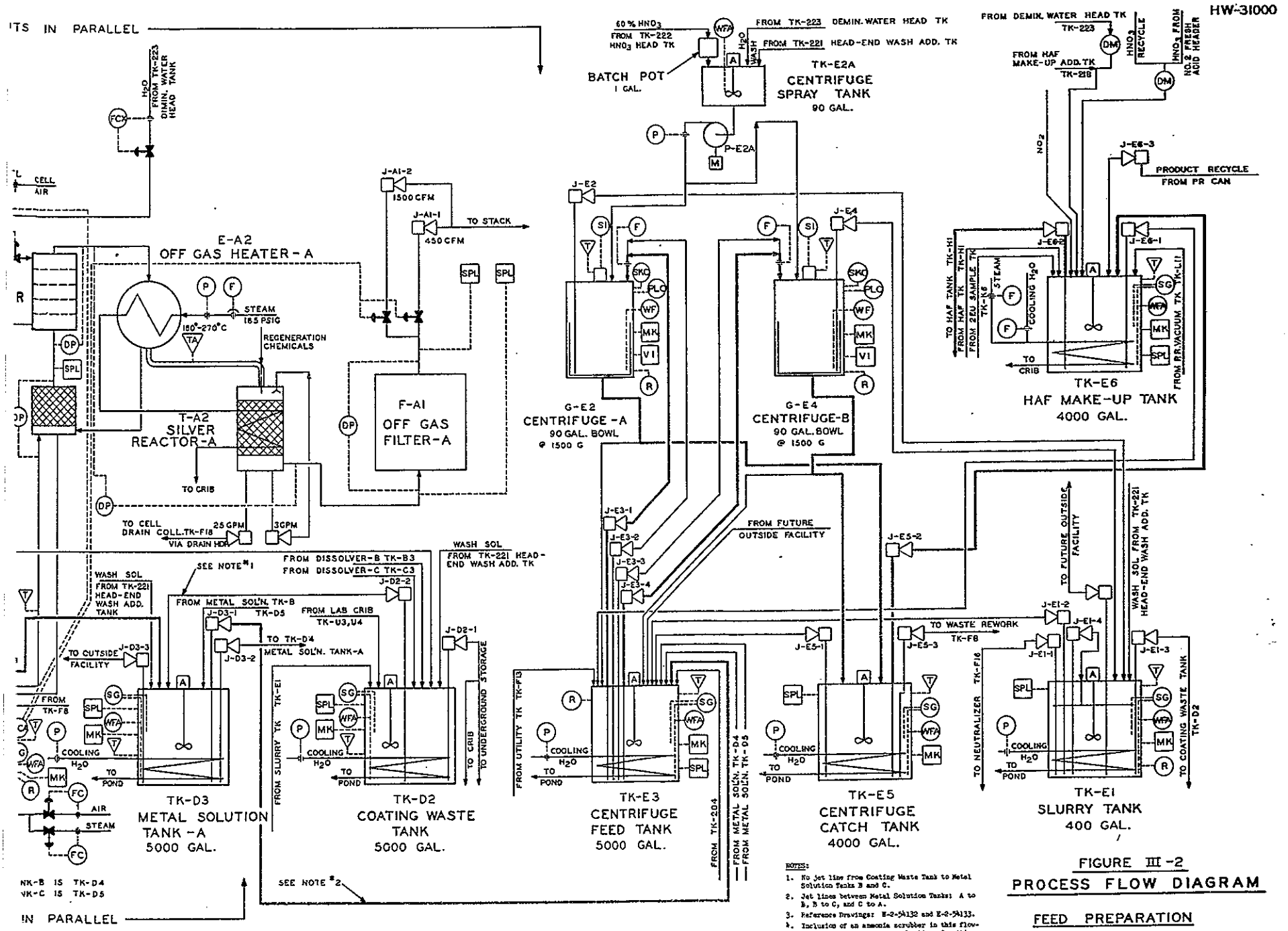

NOTES:

1. No jet line from Coating Waste Tank to Metal Solution Tanks B and C.
2. Jet lines between Metal Solution Tanks: A to B, B to C, and C to A.
3. Reference Drawings: H-2-54132 and H-2-54133.
4. Inclusion of an ammonia scrubber in this flowsheet is provisional. At the time of writing, the decision to include ammonia scrubbers in the Purex Plant was only tentative.

FIGURE III-2

PROCESS FLOW DIAGRAM

FEED PREPARATION

[redacted]

[redacted]

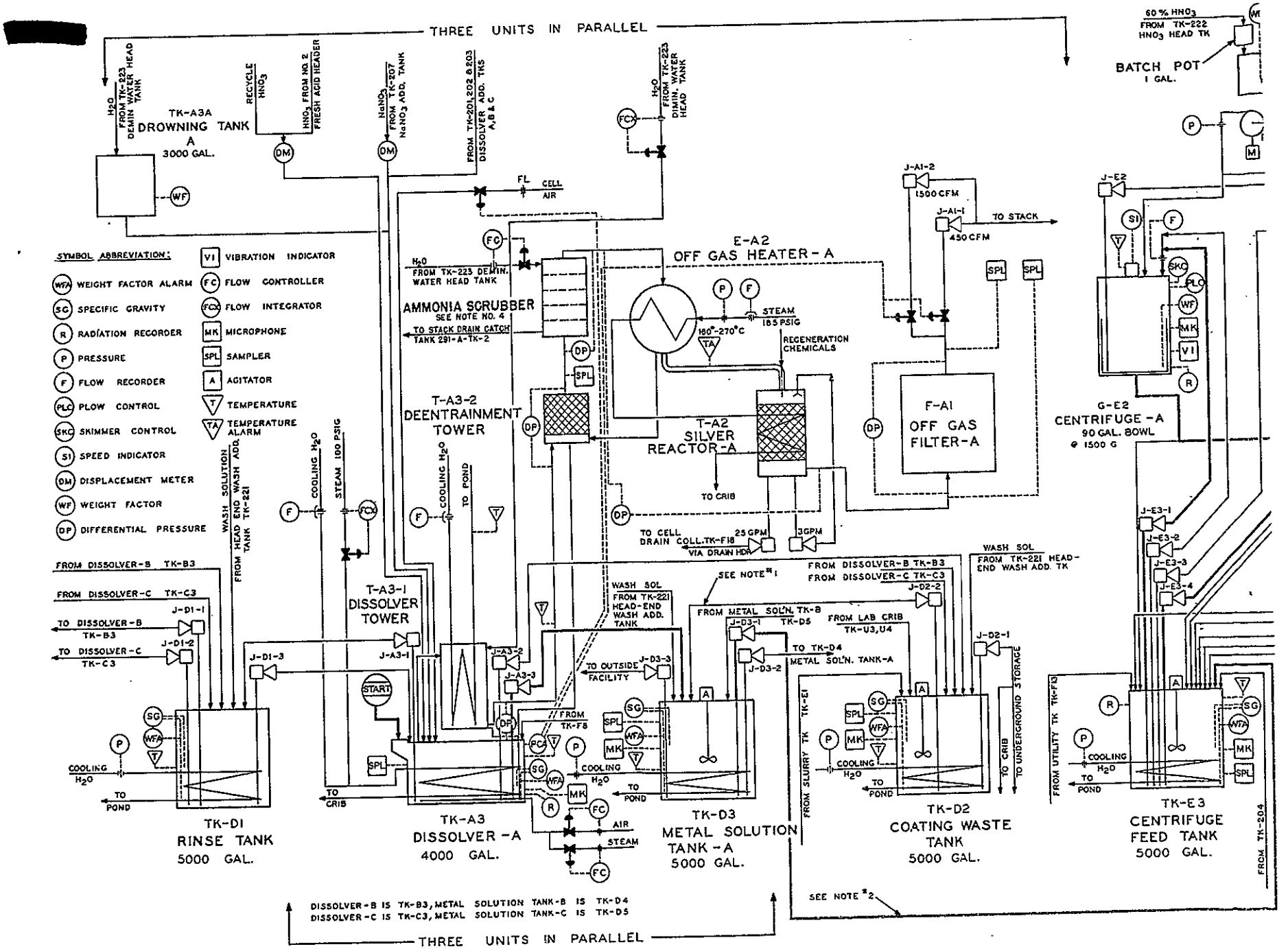
THREE UNITS IN PARALLEL
SYMBOL ABBREVIATION:
WFA WEIGHT FACTOR ALARM
SG SPECIFIC GRAVITY
R RADIATION RECORDER
P PRESSURE
F FLOW RECORDER
PLC PLOW CONTROL
SKC SKIMMER CONTROL
SI SPEED INDICATOR
DM DISPLACEMENT METER
WF WEIGHT FACTOR
DP DIFFERENTIAL PRESSURE
VI VIBRATION INDICATOR
FC FLOW CONTROLLER
FCX FLOW INTEGRATOR
MK MICROPHONE
SPL SAMPLER
A AGITATOR
T TEMPERATURE
TA TEMPERATURE ALARM
TK-A3A
DROWNING TANK
A
3000 GAL.
H2O FROM TK-223 DEMIN WATER HEAD TANK
RECYCLE HNO3
HNO3 FROM NO. 2 FRESH ACID HEADER
NaNO3 FROM TK-207 NaNO3 ADD. TANK
FROM TK-201,202 & 203 DISSOLVER ADD. TKS A,B & C
H2O FROM TK-223 DEMIN. WATER HEAD TANK
FL CELL AIR
H2O FROM TK-223 DEMIN. WATER HEAD TANK
AMMONIA SCRUBBER
SEE NOTE NO. 4
TO STACK DRAIN CATCH TANK 291-A-TK-2
E-A2
OFF GAS HEATER-A
STEAM 185 PSIG
180°-270°C
REGENERATION CHEMICALS
T-A3-2
DEENTRAINMENT TOWER
T-A2
SILVER REACTOR-A
TO CRIB
F-A1
OFF GAS FILTER-A
J-A1-2
1500 CFM
J-A1-1
450 CFM
TO STACK
60% HNO3 FROM TK-222 HNO3 HEAD TK
BATCH POT
1 GAL.
G-E2
CENTRIFUGE-A
90 GAL. BOWL
@ 1500 G
J-E2
J-E3-1
J-E3-2
J-E3-3
J-E3-4
COOLING H2O
STEAM 100 PSIG
TO POND
WASH SOLUTION FROM HEAD END WASH ADD TANK TK-221
FROM DISSOLVER-B TK-B3
FROM DISSOLVER-C TK-C3
TO DISSOLVER-B TK-B3
TO DISSOLVER-C TK-C3
J-D1-1
J-D1-2
J-D1-3
T-A3-1
DISSOLVER TOWER
J-A3-1
J-A3-2
J-A3-3
START
WASH SOL FROM TK-221 HEAD-END WASH ADD. TANK
SEE NOTE #1
FROM METAL SOL'N. TK-B TK-D5
FROM LAB CRIB TK-U3,U4
TO TK-D4 METAL SOL'N. TANK-A
J-D3-1
J-D3-2
J-D3-3
TO OUTSIDE FACILITY
FROM TK-F8
AIR
STEAM
J-D2-1
J-D2-2
TO UNDERGROUND STORAGE
FROM SLURRY TK TK-E1
FROM UTILITY TK TK-F13
FROM TK-204
TK-D1
RINSE TANK
5000 GAL.
TK-A3
DISSOLVER-A
4000 GAL.
TK-D3
METAL SOLUTION TANK-A
5000 GAL.
TK-D2
COATING WASTE TANK
5000 GAL.
TK-E3
CENTRIFUGE FEED TANK
5000 GAL.
SEE NOTE #2
DISSOLVER-B IS TK-B3, METAL SOLUTION TANK-B IS TK-D4
DISSOLVER-C IS TK-C3, METAL SOLUTION TANK-C IS TK-D5
THREE UNITS IN PARALLEL

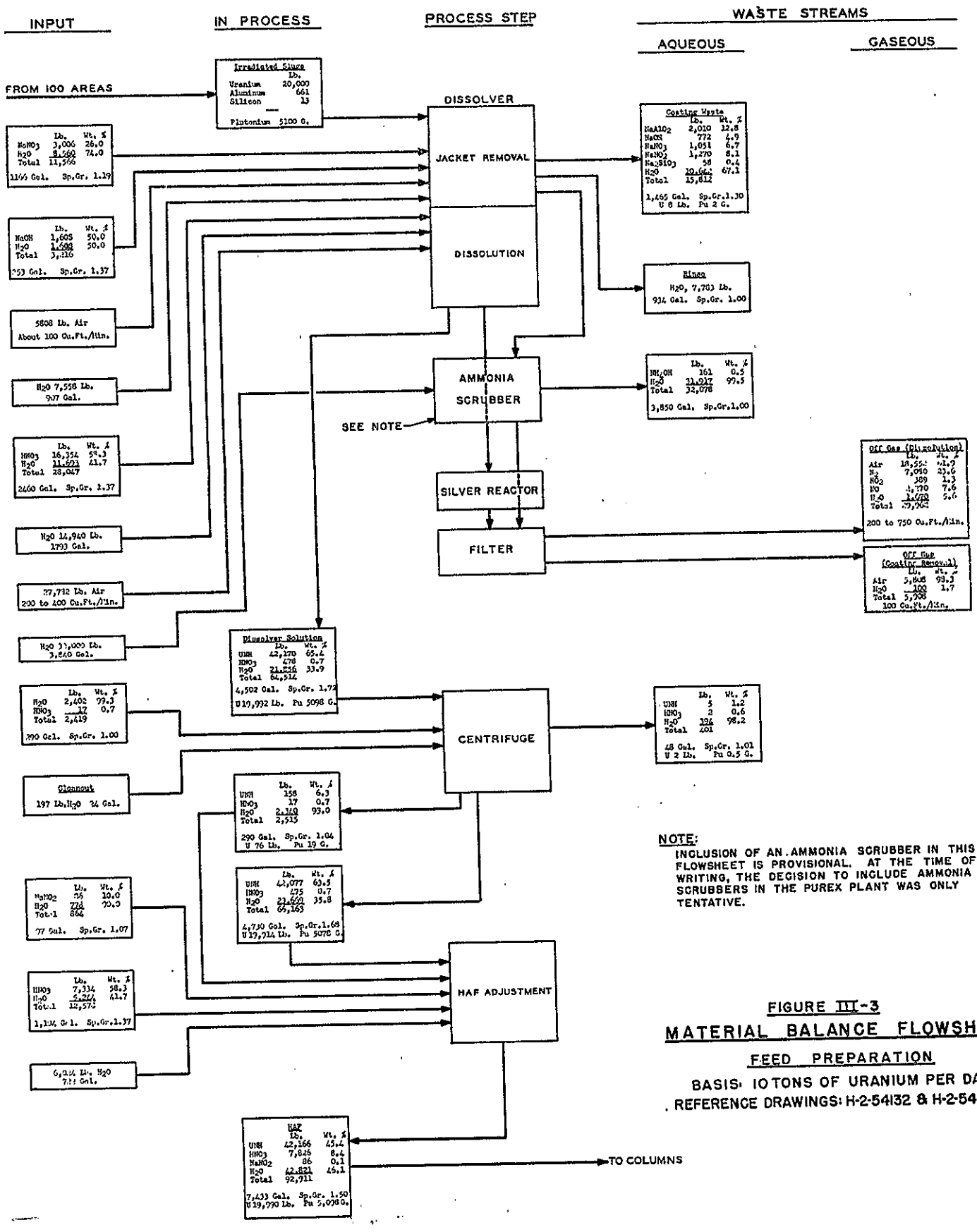

NOTE:
INCLUSION OF AN AMMONIA SCRUBBER IN THIS FLOWSHEET IS PROVISIONAL. AT THE TIME OF WRITING, THE DECISION TO INCLUDE AMMONIA SCRUBBERS IN THE PUREX PLANT WAS ONLY TENTATIVE.

FIGURE III-3

MATERIAL BALANCE FLOWSHEET

FEED PREPARATION

BASIS: 10 TONS OF URANIUM PER DAY.

REFERENCE DRAWINGS: H-2-54132 & H-2-54133

HW-31000

PART II: PROCESS, continued

CHAPTER IV. PROCESS CHEMISTRY (SOLVENT EXTRACTION)

CONTENTS

	Page
A. PROCESS DESCRIPTION	403
1. Basic Principles	403
1.1 Principles of solvent extraction	403
1.2 Distribution ratio	404
1.3 Basis of the Purex process	404
1.4 Choice of solvent	405
1.5 Function and choice of diluent	406
1.6 TBP complexing with uranium and plutonium	406
1.7 Salting	408
1.8 Factors influencing solvent-extraction effectiveness	409
2. Chemical Flowsheet	411
3. HA Column	412
4. HC Column	417
5. Uranium-Plutonium Partition Cycle	419
6. Final Uranium Decontamination Cycle	423
7. Cross-Over Oxidation	423
8. Final Plutonium Decontamination Cycle	424
9. Supplementary Decontamination by Sorption	427
9.1 Silica-gel adsorption for uranium clean-up	427
9.2 Ion exchange for plutonium-product treatment	428
B. PROPERTIES OF PROCESS MATERIALS	429
1. Tributyl Phosphate	429
1.1 Introduction	429
1.2 Specifications	429
1.3 Physical properties	430
1.4 Radiation stability	430
1.5 Chemical properties	430
1.6 Properties of DBP and MBP	434
2. Diluent	435
3. Solvent-Phase Solutions	438
4. Aqueous Uranium Nitrate Solutions	443
5. Aqueous Waste Solutions	447
6. Aqueous Plutonium Nitrate Solutions	448
7. Reducing Agents	453
7.1 Ferrous sulfamate	453
7.2 Sulfamic acid	454
7.3 Ferrous ammonium sulfate	455

CONTENTS

Page

8. Surface and Interfacial Properties 457
9. Heats of Extraction and Stripping 461

C. SOLVENT-AQUEOUS PHASE EQUILIBRIA 462

1. Uranium 462
2. Plutonium 467
3. Fission Products 471
4. Nitric Acid 478
5. Uranium X_1 and Uranium X_2 479
6. Neptunium 480
7. Americium and Curium 481
8. Other Metallic Ions 481

REFERENCES 483

LIST OF TABLES AND FIGURES 498

CHAPTER IV. PROCESS CHEMISTRY (SOLVENT EXTRACTION)

This chapter describes and discusses the Purex solvent-extraction process in its chemical aspects and presents pertinent chemical and physical data. Engineering considerations pertaining to the pulse columns in which the solvent-extraction steps are carried out are treated in Chapter V, while operating procedures are outlined, in conjunction with a process flow diagram, in Chapter VI.

The information contained in Chapter IV is divided into three sections: Section A is a discussion of the chemical variables involved in the process, Section B is a presentation of the most relevant of the physical and chemical properties of the process materials, and Section C summarizes the equilibrium data for the mass transfer of Purex-process components between aqueous and solvent phases.

A. PROCESS DESCRIPTION

1. Basic Principles

1.1 Principle of solvent extraction

If an aqueous solution of uranyl nitrate is placed in a beaker and a layer of tri-n-butyl phosphate (TBP) diluted with some kerosene is added, it may be shown by chemical analysis of the resulting aqueous and organic phases that some of the uranyl nitrate in solution in the aqueous phase transfers to the organic solvent. The operation is referred to as solvent extraction. Similarly, if the solvent layer is removed from the above-mentioned system and placed in contact with fresh water, some of the uranyl nitrate solute transfers back to the aqueous phase.

The transfer of a desired solute, such as uranyl nitrate, from an aqueous solution into an organic solvent is colloquially referred to simply as "extraction", while its removal from the solvent phase into an aqueous one is termed "stripping".

If either of the two-phase systems discussed above is agitated to cause intimate intermixing of the two immiscible liquid phases, it is found that the uranyl nitrate concentration in each phase becomes constant, although usually not the same concentration in both phases. When constant concentrations have been attained, a dynamic equilibrium has become established, with the number of uranyl nitrate molecules leaving the aqueous phase equal to the number returning in a given time. The process of attaining equilibrium between the two phases is termed "equilibration" of the phases. It has been found experimentally that the distribution of a solute in such a two-phase system depends on the relative solubility of the solute in each phase. The distribution of uranyl nitrate may therefore be altered by the simple expedient of altering the relative solubility of the uranyl nitrate in either the aqueous or the solvent phase.

In the Purex solvent-extraction system the relative solubilities of the nitrates of uranium, plutonium, and the fission-product elements are controlled

in order to effect their separation from each other. The factors affecting relative solubility, and therefore the distribution ratio between aqueous solutions and an organic solvent, include the nature of the solvent, the composition of the aqueous phase, the chemical state of the solutes undergoing mass transfer, and temperature. These factors are discussed in the following paragraphs.

1.2 Distribution ratio

The ratio between the concentrations of a given solute (e.g., uranyl nitrate) in each of two liquid phases in contact equilibrium is variously referred to as the distribution ratio, distribution coefficient, or partition coefficient. It is designated by the letter E, to which a subscript and superscript are appended to indicate which phase is the reference phase. Thus, for uranyl nitrate, E_a^o indicates the ratio of the concentration of the uranyl nitrate in the organic phase to the concentration in the aqueous phase. The term "distribution ratio" is used in the sense of this organic-to-aqueous distribution ratio (E_a^o) throughout this manual unless otherwise indicated, although E_o^a, which is the reciprocal of E_a^o, is sometimes used elsewhere in the project literature.

The numerical value of a given distribution ratio varies according to whether the concentrations are expressed on a weight basis (such as grams of uranyl nitrate per gram of solution) or on a volume basis (such as grams of uranyl nitrate per liter of solution). However, the volume basis is used throughout this manual unless otherwise indicated.

The distribution ratio is the ratio of solute concentrations regardless of the relative volumes of the two liquid phases. It is apparent, however, that, for example, the amount of uranyl nitrate extracted from the aqueous solution by the solvent is dependent upon the relative volume of solvent used as well as the uranyl nitrate distribution ratio. The mass-transfer relationship between the distribution ratio and the phase volume ratio is expressed by the extraction factor, which is discussed briefly under 1.8 below, and more extensively in Chapter V.

1.3 Basis of the Purex process

The Purex solvent-extraction process involves two kinds of separation: the separation of uranium and plutonium from (a) radioactive fission products and (b) from each other.

Uranium and tetravalent plutonium are readily extracted by tri-n-butyl phosphate (TBP) from aqueous solutions rich in nitrate ion. Fission products are also partially extracted by TBP, but to a much lesser extent, so that a relatively high degree of separation may be obtained.

To separate uranium and plutonium from each other advantage is taken of the ease with which plutonium is reduced from its highly extractable tetravalent state to its trivalent form, which is only very sparingly extracted by TBP. The reducing agent (ferrous sulfamate in the Purex process) which

changes the plutonium from its tetravalent to its trivalent state leaves the uranium unchanged in its common, hexavalent form, which continues to favor the solvent phase.

Since in the absence of sufficient concentrations of nitrate ion uranium and plutonium have relatively low solvent-to-aqueous phase distribution ratios, they may be stripped from the solvent with water (or very dilute aqueous nitric acid) in preparation for further processing.

Actually, pure TBP is itself generally not suitable for solvent extraction because its density (0.97 g./ml.) is close to that of water and its viscosity (3.4 centipoises at 25°C.) is high. These properties can be altered in the desirable direction by mixing with an inert hydrocarbon-type liquid of low density and viscosity.

In the Purex process the TBP is diluted with a refined hydrocarbon mixture in the kerosene boiling range having a density just under 0.8 g./ml. The solvent mixture consists of 30% TBP and 70% diluent by volume.

The solvent action of TBP for uranium and plutonium is due to the formation of coordination complexes (discussed under 1.6, below).

1.4 Choice of solvent

Tributyl phosphate is an excellent solvent for the separation of uranium, plutonium, and fission products by solvent extraction by virtue of the following desirable characteristics:

(a) It has a high extraction effectiveness and selectivity for uranium and plutonium.

(b) It has low mutual solubility with an aqueous phase in contact.

(c) It has good chemical stability in the system, including stability towards moderate concentrations of nitric acid, which permits the economically advantageous use of nitric acid as "salting" agent (discussed under 1.7, below).

(d) It has adequate radiation stability.

(e) It has a low vapor pressure and high flash point.

(f) It has suitable density, viscosity, and interfacial tension in the system -- though only when diluted with a suitable water-immiscible liquid, as discussed under 1.5, below.

(g) It is quite easily purified for reuse.

(h) It is available in the needed quantities at sufficiently low cost.

(i) It is relatively noncorrosive.

(j) It has low toxicity.

1.5 Function and choice of diluent

As mentioned under 1.3, above, pure TBP is not suitable for use in solvent extraction because its density (0.97 g./ml.) is close to that of water and its viscosity (3.4 centipoises at 25°C.) is high. Also, TBP is moderately surface active and would, if used in a pure state, too readily form emulsions with aqueous solutions. These properties may be altered in the desirable direction by diluting the TBP with an organic compound or mixture which has suitable physical properties and is chemically inert in the system. The diluent must be completely miscible with TBP and exhibit a high solvent action for the complexes formed by TBP with uranyl nitrate and with plutonium nitrate. Except for solvent action, desirable characteristics for a diluent are generally similar to those indicated above (under 1.4) for the solvent itself.

Suitable diluents which reduce the density of the solvent phase to the needed extent include a number of saturated hydrocarbon compounds and mixtures. Hydrocarbons in the paraffin series in the neighborhood of undecane would be generally suitable, but expensive. The Purex Plant employs a mixture of saturated hydrocarbons boiling in the kerosene range. Several such mixtures (discussed in Section B) are commercially available. Some (e.g., Shell E-2342) are made by purification of a petroleum fraction. Others (e.g., Soltrol-170) are synthesized from lower-molecular-weight hydrocarbons. (A specific commercial product has not yet been selected at the time of writing.)

Unsaturated hydrocarbons are generally not suitable as diluents for TBP, because of their excessive tendency to extract some radioactive fission products into the solvent phase, and also because of excessive susceptibility to degradation under process conditions. Saturated-hydrocarbon diluents must be relatively free of unsaturated impurities: a combined aromatic and olefin content not exceeding two volume per cent is considered desirable, although a diluent containing as much as 11 volume per cent aromatics (Amsco 123-15) has been used successfully in "hot" pilot-plant studies at Oak Ridge.

A 30 volume per cent concentration of TBP in the solvent phase has been selected as a compromise between the conflicting requirements of solvent-phase properties approaching those of the pure diluent and low solvent volume per unit weight of uranium processed.

Carbon tetrachloride shows promise as an alternative diluent for tributyl phosphate and will be employed in the Recuplex process at Hanford. Its selection for the Purex Plant was precluded by insufficient demonstration of its stability under the chemical and radiation conditions of the process, particularly with respect to formation of the corrosive chloride ion. Unlike the hydrocarbon diluents, carbon tetrachloride produces a heavier-than-water solvent phase. (The Purex Plant is designed for a lighter-than-water solvent.)

1.6 TBP complexing with uranium and plutonium

The solvent action of TBP for uranium and plutonium is dependent upon the formation of coordination complexes. Equations representing the extraction

of uranium and Pu(IV) from aqueous solutions are as follows:[1,14]

$$UO_2^{+2}\ (Aq.) + 2NO_3^-\ (Aq.) + 2TBP\ (Org.) \rightleftharpoons UO_2\ (NO_3)_2.(TBP)_2(Org.) \ldots (1)$$

$$Pu^{+4}\ (Aq.) + 4NO_3^-\ (Aq.) + 2TBP\ (Org.) \rightleftharpoons Pu(NO_3)_4.(TBP)_2(Org.) \ldots\ldots (2)$$

For the reversible reaction represented by Equation (1) the equilibrium "constant", K, may be expressed by the following relationship, in which concentrations are given as molarities:

$$K = \frac{[UO_2(NO_3)_2.2TBP(Org.)]}{[UO_2^{+2}\ (Aq.)]\ [NO_3^-\ (Aq.)]^2\ [TBP\ (Org.)]^2} \ldots\ldots\ldots\ldots\ldots (3)$$

where TBP (Org.) represents the concentration of uncomplexed tributyl phosphate in the organic phase. Since two moles of TBP combine with each mole of uranyl nitrate extracted, the value of the term TBP(Org.), may be calculated from the following equation:

$$TBP(Org.) = TBP - 2UN(Org.) \ldots\ldots\ldots\ldots\ldots\ldots\ldots\ldots (4)$$

where TBP represents the initial total concentration of TBP in the organic phase and UN(Org.) represents the uranyl nitrate concentration in the organic phase. From the definition of the organic/aqueous distribution ratio for uranyl nitrate, assuming that all the uranyl nitrate in the aqueous phase is completely ionized, the following relationship may be written:

$$E_a^o = \frac{UO_2(NO_3)_2.2TBP(Org.)}{UO_2^{+2}\ (Aq.)} \ldots\ldots\ldots\ldots\ldots\ldots\ldots\ldots (5)$$

where E_a^o = distribution ratio, (g./l. organic phase)/(g./l. aqueous phase). Then, substitution in the above equation for the equilibrium "constant", K, results in the following expression:[24]

$$K = \frac{E_a^o}{[NO_3^-(Aq.)]^2\ [TBP - 2UN(Org.)]^2} \ldots\ldots\ldots\ldots\ldots\ldots (6)$$

By transposition, Equation (6) may be expressed as:

$$E_a^o = K[NO_3^-(Aq.)]^2\ [TBP - 2UN(Org.)]^2 \ldots\ldots\ldots\ldots\ldots\ldots (7)$$

Since uranyl nitrate does not form a perfect solution in water under process conditions, K is not constant for the equilibrium expressed but varies with the concentrations of the various solution components. However, as discussed later, inspection of Equation (7) provides a generally correct explanation of the nature and order of magnitude of the effects of the concentrations of uranyl nitrate, nitric acid, and TBP on the distribution ratio of uranyl nitrate.

An analysis analogous to the above may be applied to plutonium (IV) on the basis of Equation (2). However, the concentration of the plutonium itself may usually be neglected in the analysis, since the concentration of plutonium in Purex-process streams is almost invariably low enough for its self-salting effect and its solvent-saturating effect to be insignificant.* Thus for Pu(IV), Equation (2) yields:

$$E_a^o = K\left[NO_3^-(Aq.)\right]^4 \left[TBP(Org.)\right]^2 \qquad (8)$$

Equation (8) for plutonium (IV), like Equation (7) for uranium, is valid as a first approximation for indicating trends of the effects of nitrate ion and TBP concentrations on the distribution ratio. Equation (8) is subject to the further limitation that when uranium is also present in the system the amount of TBP complexed by the uranium, and thus rendered unavailable for complex formation with plutonium, must also be taken into account.

The nitrate of plutonium in its highest, hexavalent oxidation state also forms a coordination complex with TBP. However, organic-to-aqueous distribution ratios of Pu(VI) are generally somewhat lower than those of Pu(IV), as discussed in Section C.

Inspection of Equation (1) shows that the number of moles of uranium which can be dissolved in a given amount of solvent is equal to one-half the number of moles of TBP. The maximum uranium content of the Purex solvent (30 volume per cent TBP) is 0.52 moles/liter. This is slightly less than one-half the TBP concentration in the solute-free solvent, due to the volume change which occurs when uranium transfers into the solvent.

As uranium saturation of the solvent is approached, less solvent is available for complexing fission products and their extraction is thus generally repressed, yielding improved separation.

1.7 Salting

As brought out in the foregoing discussion, the amount of uranium and plutonium forced from an aqueous solution into the organic phase may be sub-

---

*) This simplification is not valid for 2A and 2B Column operation at "reflux-flowsheet" conditions, discussed under 8.4, below.

stantially increased by increasing the nitrate ion concentration in the aqueous phase.

This phenomenon is referred to as "salting", although the nitrate ion is not necessarily supplied by a salt, but may be supplied by nitric acid.

The Purex process employs nitric acid as the salting agent. As compared with common metal nitrates (such as sodium or aluminum nitrate) which would also be suitable, nitric acid has the important advantage that it may be readily recovered by distillation. The important savings realized by the recovery of nitric acid arise in two ways: (a) directly, from chemical cost savings; and (b) indirectly, from decreased volume of radioactive aqueous wastes to be stored in underground tanks, and hence decreased cost of storage.

Since uranyl nitrate itself may furnish important concentrations of nitrate ion, it is self-salting at high concentrations. Nitric acid is nevertheless required as a supplementary salting agent in extraction columns receiving concentrated aqueous uranium nitrate solutions as feed, in order that the extraction of uranium may be brought to the required degree of completeness. In such cases the nitric acid supplies the needed salting strength after some of the uranium has been extracted so that its self-salting effect is no longer sufficient.

Nitric acid generally effects an increase in the organic-to-aqueous phase distribution ratio of fission products as well as in those of uranium and plutonium. However, even the increased fission-product distribution ratios are low, so that separation of fission products from uranium and plutonium to the required high degree is obtained.

The effects of nitric acid on the distribution ratios of uranium, plutonium, and fission products are shown quantitatively in Section C.

1.8 Factors influencing solvent-extraction effectiveness

In a simple batch solvent-extraction process such as the beaker experiments described at the beginning of this chapter (under 1.1), in which the two liquid phases brought into contact are agitated together until equilibrium is reached, the amount of any solute extracted depends only on the distribution ratio (explained under 1.2, above) and on the relative volumes of the two phases. The ratio of the amount of solute in the organic phase to the amount in the aqueous phase after equilibration may be expressed as:

$$E_a^o(O/A)$$

where E_a^o = distribution ratio, (g./l. organic phase)/(g./l. aqueous phase);

O/A = organic-to-aqueous-phase volume ratio.

This product of the distribution ratio and the phase volume ratio is termed the "extraction factor", usually defined as above for stripping (solute transfer

from the organic to the aqueous phase) and as the reciprocal of the above for extraction (transfer from the aqueous phase to the organic one). In a slightly modified form, the extraction factor is useful in the interpretation of solvent-extraction operations more complex than a simple batch contact, as discussed in Chapter V.

A solvent-extraction operation may in practice accomplish an extraction effectiveness equivalent to more than one theoretical stage of equilibration. This may be achieved by a series of several batch contactings, or by continuous countercurrent flow of one phase through the other, as discussed in Chapter V. In the Purex Plant the required number of equivalent theoretical stages is obtained by passing one phase countercurrently through the other in pulse columns. In such a countercurrent solvent-extraction process the over-all solvent-extraction effectiveness obtained in the contacting equipment is not only a function of the equilibrium relationship indicated in the preceding paragraph, but is also a function of the number of theoretical stages of equilibration to which the actual countercurrent operation is equivalent.

As the extraction factor becomes more favorable, not only the number of theoretical stages required for a given extraction, but also the number of equivalent stages available in a column decreases. The latter trend imposes a serious limitation on the prediction of column performance from phase equilibrium data on the basis of the concept of the number of theoretical stages. The "transfer-unit" concept, explained more fully in Chapter V, is useful in partially overcoming this limitation. A transfer unit is so defined that when the extraction factor is unity, i.e., when the amount of solute in the two phases at equilibrium would be the same, the amount of solute extracted in one transfer unit is the same as that extracted in one theoretical stage, viz., one-half of the amount of solute in the feed is transferred into the initially solute-free extractant. However, it is also a part of the definition of a transfer unit that as the extraction factor becomes more and more favorable the amount of mass transfer taking place in one transfer unit changes much less rapidly than the amount of mass transfer taking place in one theoretical stage. For example, in extraction with an essentially solute-free extractant, an extraction factor yielding a five-fold solute-concentration reduction in the feed phase per theoretical stage would yield only a 2.5-fold reduction per transfer unit. At an extraction factor of 0, i.e., when one theoretical stage would extract all the solute from the feed phase into the extractant phase, the feed-phase concentration change per transfer unit becomes a 2.72-fold one. The number of transfer units in a column is more nearly constant than the number of theoretical stages as distribution ratios, and hence extraction factors, change.

Distribution ratios, and hence the extraction effectiveness per theoretical stage (or per transfer unit), depend on chemical conditions as discussed in the present chapter. Chemical conditions of importance include the chemical species and concentration of the transferring solute, the concentration of the nitric acid salting agent, the concentration of TBP in the solvent phase, and the presence of any complexing agents other

than TBP (e.g., of dibutyl phosphate, a hydrolysis product of TBP, which forms a stronger organic-favoring complex with uranium than does TBP, or of sulfate ion, which tends to form aqueous-favoring complexes).

The number of equivalent theoretical stages or transfer units in a pulse column is determined by the physical properties of the liquids, by the design of the column, and by the column operating conditions. The height of the column section provided for countercurrent passage of the phases and the intimacy of interphase contact are both important. Among the system physical properties influencing extraction effectiveness are density, viscosity, diffusivity, and interfacial tension. Throughput rate, pulse frequency, and phase flow ratio are among the influential column operating conditions.

Temperature affects both the distribution ratio and the number of equivalent theoretical stages (or transfer units) in the column. A temperature increase may alter the distribution ratio in either direction, the direction and magnitude of the change being a function of the nature of the solute and of the liquid compositions. The effect of elevated temperature on the number of equivalent theoretical stages (or transfer units) is generally favorable. The accelerating effect of increased temperature upon the degradation of some solvent-phase components to form undesirable degradation products is also a factor of potential importance.

Methods of calculating the number of equivalent theoretical stages and the number of transfer units in a pulse column are explained in Chapter V. The various non-chemical factors influencing the solvent-extraction effectiveness of pulse columns are also discussed in Chapter V.

2. Chemical Flowsheet

The Purex solvent-extraction process has been outlined in Chapter I, in conjunction with a chemical flowsheet, which shows the sequence of solvent-extraction steps and the compositions and relative volumes of the various process streams. The convenient brief designations of the several solvent-extraction columns and column streams (HA Column, HAF stream, etc.) have also been explained in Chapter I.(132, 142, 155, 166a, 229, 230)

In the following subsections the individual process steps carried out in the several solvent-extraction columns are discussed. The main process factors upon which the functioning of each of the steps depends are stressed. Important process variables and the nature and order of magnitude of their effects on column performance are indicated in each case. However, quantitative distribution-ratio data and data on the performance characteristics of the pulse columns themselves as a function of column operating variables are outside the scope of this discussion. For distribution-ratio data reference is made to Section C of this chapter; for pulse-column performance information, to Chapter V.

3. HA Column

3.1 General

The purpose of the HA Column is the separation of uranium and plutonium from the bulk of the fission products.

The aqueous feed solution is introduced at a point approximately half-way up the column and flows downward through the "extraction" section of the column. In this extraction section the conditions of flow rates, salting strength, and plutonium valence state are controlled in such a way that the uranium and plutonium entering with the aqueous feed are extracted almost quantitatively into the upward flowing solvent. Some fission products are also extracted, but are partially scrubbed back into an aqueous phase in the top, or "scrub", section of the column and returned to the feed point. The net result of the column operation is the almost quantitative transfer of uranium and plutonium to the solvent phase, while well over 99% of the fission products leave the bottom of the column as an aqueous waste stream.

3.2 Uranium extraction

The solvent (HAX) flow rate employed is very little more than barely sufficient to achieve essentially quantitative extraction of the uranium. Under HW #3 Flowsheet conditions the solvent flow employed is only 18% above the minimum theoretical requirement based on the controlling (feed-point) uranium distribution ratio. A slight excess solvent flow of about this magnitude is required to compensate for possible minor variations in the exact flow ratio across the column cross section and to allow a reasonable margin for normal minor control variations in stream flow rates and compositions in the course of plant operation. The excess solvent flow, however, must be kept low; otherwise too large a fraction of the fission products would be extracted along with the uranium and plutonium, as will be discussed later.

The solvent flow must be sufficient to extract not only the uranium as it is brought in with the feed but also the small amount of uranium which, after having been once extracted into the solvent, is stripped back into the aqueous phase in the scrub section of the column along with the scrubbed-out fission products. This refluxed uranium amounts to only approximately 2% of the uranium fed to the column under normal HW #3 Flowsheet conditions. However, if the extractant-to-feed flow ratio is decreased the fraction of uranium refluxed rises sharply, mainly because of the sharply decreasing uranium organic/aqueous distribution ratio as saturation of the TBP with uranium is approached. Thus, reduction in the organic-to-aqueous-phase flow ratio in the HA Column extraction section to 16% below the HW #3 Flowsheet ratio increases the percentage of uranium refluxed from the scrub section to the neighborhood of 20.

Provided that a moderate salting strength is maintained -- at least approximately 0.5 M HNO_3 in the aqueous phase -- the uranium distribution ratios in the more dilute portions of the column are considerably more

favorable than those at the feed point, so that the extractant flow required is determined by the feed-point conditions.

Uranium distribution ratios at feed-point conditions, and hence the solvent flow requirements, are relatively insensitive to salting strength variations in the 1 to 3 M aqueous HNO_3 concentration range. The solvent flow requirement decreases by only approximately 6% upon reduction of the extraction-section aqueous-phase nitric acid concentration from 3 M to 1 M. It increases by a further 4% upon reducing the nitric acid concentration from 1 to 0.5 M.

The extraction of uranium in the HA Column is exothermic. Consequently, a temperature increase affects the distribution ratios adversely. The feed-point distribution-ratio impairment upon a temperature increase from 20°C. to 45°C. is approximately 10%. However, a temperature increase also reduces transfer-unit heights in the column (as discussed in Chapter V), so that the net effect of a temperature increase on uranium extraction in the HA Column is not necessarily an adverse one: when the extractant flow is very near the minimum theoretical requirement uranium losses should increase when the temperature is increased, while with considerable excess solvent flow they should decrease with increasing temperature.

The feed-point uranium organic-to-aqueous-phase distribution ratio increases approximately in proportion to the TBP concentration in the vicinity of 30 volume per cent. (This is a close approximation for the 25 to 35 volume per cent TBP range.)

Uranium losses of several per cent result when the solvent-to-aqueous-phase flow ratio fails to exceed the minimum theoretically required by an appropriate margin as discussed above.

The presence of any monobutyl phosphate, from TBP hydrolysis, in the HA Column extraction section results in the formation of an aqueous-phase-favoring compound with uranium. The compound contains one atom of uranium per MBP molecule. The U-MBP compound leaves the column mostly with the aqueous waste.

3.3 Plutonium extraction

Dissolution of the irradiated-uranium slugs in nitric acid leaves the dissolved plutonium predominately in its most extractable, tetravalent state, although a small fraction of the plutonium may be present in the dissolver solution in the III or VI valence states -- mainly through disproportionation of Pu(IV) upon standing. In the feed adjustment step, prior to introduction of the dissolver solution into the HA Column, the plutonium is quantitatively stabilized in its tetravalent state with sodium nitrite.

HA Column plutonium distribution ratios are less favorable than those of uranium. On the basis of Oak Ridge pilot-plant findings, HA Column plutonium losses should normally be approximately twice to ten times as high as uranium losses (on a percentage-of-feed basis).

Plutonium (IV) organic-to-aqueous-phase distribution ratios under HA Column conditions are approximately 1/5 to 1/4 of those of uranium. Those of

Pu(VI) are slightly less favorable -- about 1/8 of those of uranium at similar conditions. Accordingly, plutonium losses would be significantly increased if a substantial fraction of the plutonium were in the hexavalent state, although, depending on specific conditions, this additional plutonium loss may not be prohibitive. In its trivalent state plutonium is only very sparingly extractable, so that any Pu(III) that may be present would practically quantitatively leave the column with the aqueous waste stream.

Pu(IV) concentration build-up due to scrub-section reflux (qualitatively similar to that discussed for uranium) is on the order of 1.1-fold at the feed point, but approximately 2-fold just above the intermediate-scrub introduction point, as shown by the operating diagram presented in Chapter V. Pu(VI) concentration build-up at these locations is estimated at 1.2 and 2-fold. (The exact plutonium concentration build-up in the column due to scrub-section reflux depends on the relative heights of plutonium, uranium, and nitric acid transfer units in the scrub section.)

Plutonium (IV) is more sensitive to salting-strength variations than uranium. Thus the organic-to-aqueous-phase distribution ratio (E_g) of Pu(IV) increases from approximately 1/5 of that of uranium to approximately 1/4 of that of uranium upon going from 2 M to 3 M aqueous-phase nitric acid concentration. At 1 M HNO_3 in the aqueous phase the distribution ratio of Pu(IV) is only approximately 1/6 of that of uranium.

Variations in the TBP concentration also affect the plutonium (IV) distribution ratio more than that of uranium. In the neighborhood of 30 volume per cent TBP, the organic-to-aqueous distribution ratio of plutonium (IV) varies with approximately the 1.3 power of the TBP concentration.

Unlike that of uranium, the distribution ratio of plutonium (IV) improves with temperature increase. Pu(IV) distributes about 15% more highly into the organic phase at 45°C. than at 20°C.

The presence of monobutyl phosphate probably increases plutonium losses, although the exact magnitude of the effect is not known.

3.4 Decontamination from fission products

Although TBP extracts fission products as well as uranium and plutonium, the fission products are extracted to a much lesser extent, so that, as the organic extractant stream rises past the feed point of the HA Column, the large bulk of the fission products are left behind in the aqueous phase. The small fraction of the fission products which are extracted along with the uranium and plutonium are partially scrubbed back into an aqueous phase in the scrub section of the column. The magnitude of the fission-product decontamination factors varies not only with HA Column chemical operating conditions, but also with the pile-exposure and "cooling" history of the parent irradiated-uranium slugs. Typically, on the order of 100-fold decontamination of the uranium and plutonium from gross fission-product radioactivity is obtained at the feed point, with additional decontamination of the order of 10-fold provided by the scrub section.

Feed-point decontamination factors are governed by the chemical conditions at the feed point and are essentially independent of the column operating conditions.

Feed-point decontamination for almost all fission products is impaired by increased nitric acid concentration at the feed point -- typically 1.5-fold upon going from 2 M to 3 M HNO_3. For ruthenium, however, the trend is reversed: its feed-point decontamination is improved approximately 3-fold upon increasing the HNO_3 concentration from 2 M to 3 M.

Most fission products (notably zirconium, niobium, and ruthenium, which have been particularly studied in this respect) distribute less highly into the organic phase as the fractional saturation of the TBP with uranium is increased. In one series of pilot-plant runs made at Oak Ridge, this effect was negligible upon going from 75 to 60% uranium saturation of the solvent, but very marked upon further reduction of the fractional saturation to 50%. Upon the latter reduction in the fractional saturation, over-all pilot-plant HA Column decontamination was impaired by factors ranging from approximately 2, for ruthenium, to approximately 50, for zirconium.

Scrub-section decontamination factors are a function not only of the chemical conditions prevailing in the scrub section, but also of the column operating conditions as they affect the solvent-extraction contacting effectiveness of the scrub section.

Since the least extractable fission products are very largely left behind in the aqueous phase at the feed point, gross fission-product organic-to-aqueous distribution ratios in the scrub section are higher than those prevailing at the feed point. Even in the scrub section itself gross fission-product distribution ratios do not remain constant: as the most aqueous-favoring species entering the scrub section are transferred into the aqueous phase, the average distribution ratio of the remaining fission products becomes less favorable to scrubbing as one proceeds upward in the scrub section.

The effects of nitric acid concentration and of fractional saturation of the TBP with uranium on scrub-section fission-product distribution ratios are qualitatively similar to their effects at the feed point. Thus the use of water as the top scrub in a column employing a split scrub stream (as done in the HA Column) results in more favorable upper-scrub-section distribution ratios for most fission products than would be obtained with nitric acid as the top scrub, while the ruthenium distribution ratio there is impaired by the water scrub. Introduction into the column of an adequate amount of nitric acid, with either the top or the intermediate scrub stream, is required partly for good decontamination from ruthenium at the feed point, and partly to maintain an extraction-section salting strength sufficient for essentially quantitative extraction of the uranium and plutonium.

Normally the fission products most highly extracted by TBP are ruthenium, zirconium, and niobium. Rare-earth elements which contribute a large fraction of the feed fission-product beta radioactivity generally have such low organic-to-aqueous-phase distribution coefficients that they are normally extracted to an unimportant extent in comparison with ruthenium, zirconium, and niobium.

Over-all fission-product decontamination factors obtained in the Purex process are normally governed by decontamination from the three last-mentioned elements.

Radioruthenium contributes on the order of 5% of the gross beta and on the order of 10% of the gross gamma activity of the feed. As discussed in Section C, its solvent-extraction behavior has been only partially characterized. It is complicated by the fact that ruthenium is capable of existing, under Purex-process conditions, in several valence states, in a variety of chemical forms, including complex nitroso-nitrates.

Zirconium normally contributes about 1/10 of the gross beta and 1/3 of the gross gamma activity of the feed; niobium about 1/100 of the gross beta and 1/3 of the gross gamma activity. Niobium and zirconium exhibit some tendency to be adsorbed on solids. High radioactivity levels sometimes associated with solids accumulated at the aqueous-organic interface in the column ("crud") are usually largely due to Nb and Zr.

Radioiodine, which has an 8-day half life, is present in important concentrations only in feeds aged less than 90 days after pile discharge. Iodine in the feed is almost completely extracted into the organic phase, probably as a result of chemical reaction with hydrocarbon components in the diluent.

It is known that some degradation products of TBP and of the diluent affect over-all fission-product decontamination adversely. DBP (dibutyl phosphate, resulting from TBP hydrolysis) and diluent nitration products are believed to be among these potential harmful agents.

3.5 Nitric acid extraction

TBP extracts nitric acid to a much greater extent that it extracts fission products, although to a lesser extent that uranium and plutonium. If 3 M HNO_3 were introduced as the scrub solution at the top of the HA Column, the organic extract (HAP) leaving the column would contain about 0.2 M HNO_3. Use of water as the top scrub reduces the concentration of nitric acid extracted on the order of 10-fold, the exact reduction depending on the mass-transfer effectiveness of the top portion of the scrub section (number of transfer units).

Reduction of the nitric acid concentration in the HAP stream results in reduction in acidity in the subsequent HC Column and, hence, in the HCP Concentrator. This is desirable because the concentrator resists corrosion better at low acidity.

With water used as the scrub solution introduced at the top of the column, the nitric acid needed to insure good feed-point ruthenium decontamination and to maintain sufficient salting strength in the extraction section for essentially quantitative extraction of uranium and plutonium is provided by the introduction of nitric acid in a second scrub stream, introduced at an intermediate point along the height of the scrub section.

3.6 Uranium X_1 and X_2, Neptunium, Americium, and Curium

Uranium X_1 (Th-234) and uranium X_2 (Pa-234), products of the radioactive decay of U-238, are extracted almost completely (on the order of 99%) in the HA Column, even though their organic-to-aqueous distribution ratios are lower than those of plutonium. Although the distribution ratios of UX_1 and UX_2 in the dilute-uranium portion of the column are sufficiently favorable for almost complete extraction, their low distribution ratios at high fractional saturation of TBP with uranium cause them to build up in the aqueous phase near the feed point to concentrations corresponding to several times their concentrations in the feed, by a reflux mechanism qualitatively similar to that discussed for uranium and plutonium, but much more pronounced. UX_1 and UX_2 concentration build-up by reflux above the intermediate-scrub inlet is probably in the 10 to 100-fold range.

It is believed that neptunium goes largely with the plutonium throughout the Purex process, although this has not been determined directly. (The path of Np in the IB Columns is particularly uncertain.) In the HA Column the distribution ratio of neptunium is believed to be of the same order of magnitude as those of UX_1 and UX_2, so that it should exhibit a concentration build-up by reflux of the same order of magnitude as the reflux build-up for those two elements. The extent of decontamination of uranium from neptunium becomes of concern only upon repeated recycling of the uranium to the piles.(1)

Americium and curium cannot under Purex conditions be oxidized above the trivalent state. In this state they are, like trivalent plutonium, practically inextractable, so that they leave the HA Column almost quantitatively with the aqueous waste (HAW) stream.

4. HC Column

4.1 General

In the HC Column the uranium and plutonium in the HA Column organic extract are stripped into an aqueous phase of low salting strength.

Although water would be a satisfactory aqueous extractant solution from the mass-transfer standpoint, the extractant contains a low concentration of nitric acid (0.01 M). The function of the acid is to decrease the susceptibility of the HC Column to emulsification in the presence of small concentrations of surface-active impurities, such as dibutyl phosphate. The presence of this small amount of nitric acid in the HCX does not significantly impair the stripping of uranium and plutonium.

4.2 Uranium stripping

The stripping of uranium in the HC Column depends on the fact that only low concentrations of salting agent (nitric acid) are present.

HW #3 Flowsheet conditions involve the use of approximately 50% more aqueous extractant flow than the minimum theoretically sufficing for essentially quantitative extraction of uranium at room temperature. The flowsheet

HCX:HCF flow ratio is 1.8 by volume. As discussed in Chapter V, some reduction in this extractant flow (up to about 20%) may be feasible in the Plant HC Column under some operating conditions.

The limiting (least favorable) uranium distribution ratio occurs at or near the feed point.

Since the stripping of uranium is slightly exothermic, a temperature increase favors uranium stripping, and permits comparably effective stripping to be obtained with a lower aqueous-to-organic-phase flow ratio. Under HC Column conditions, the organic-to-aqueous-phase distribution ratio of uranium decreases by about 1% with each degree centigrade of temperature rise. This permits a proportionate reduction of the aqueous extractant flow rate upon increasing the column temperature.

Uranium losses of several per cent may result from HCX flow rates insufficiently in excess of the minimum theoretical requirement.

Nitric acid introduced with the organic feed stream is stripped into the aqueous phase in the lower portion of the HC Column, so that the aqueous-phase nitric acid concentration in most of the column is essentially that of the aqueous extractant stream. As the nitric acid concentration in the feed increases, the uranium distribution ratio at the feed point becomes less favorable to stripping. With the use of nitric acid as the top scrub in the HA Column and an aqueous-to-organic volume flow ratio of less than 1.5 in the HC Column (but considerably more than the theoretical minimum of about 1.2), the nitric acid salting strength at the HC Column feed point would become sufficient to prevent quantitative stripping of the uranium at that point. However, further up in the column the nitric acid concentration is lower and the uranium distribution ratio is more favorable to stripping. Under such circumstances the uranium concentration in the organic phase may actually build up, by reflux of uranium within the column, to more than the feed-point value at a point in the column somewhat above the feed point. Although such reflux build-up of uranium should slighly increase uranium losses from the column, essentially quantitative extraction can nevertheless be obtained in a column with sufficient liquid-liquid contacting effectiveness (sufficient number of transfer units).

Uranium losses are not significantly affected by minor variations in HCX acidity in the 0 to 0.03 M range, but are likely to indrease to the order of one-tenth to several tenths of a per cent if the HCX HNO_3 concentration is raised to 0.1 M.

The organic-to-aqueous-phase distribution ratio of uranium at the feed point increases with approximately the 1-1/3 power of the TBP concentration. (This is a close approximation for the neighborhood of the HC Column feed point conditions, in the 25 to 35 volume per cent TBP range.)

Dibutyl phosphate, formed by TBP hydrolysis, reacts with uranyl nitrate to form a compound which remains largely in the organic phase, and thus leaves the HC Column with the organic waste stream (HCW). The uranium-DBP compound contains 1 atom of uranium per molecule of DBP.

4.3 Plutonium stripping

Plutonium is stripped more easily than uranium, so that process conditions required in the HC Column are normally governed by uranium rather than plutonium.

The distribution ratio of plutonium (IV) in the HC Column is made less favorable to stripping by a temperature increase. The organic-to-aqueous-phase distribution ratio of plutonium (IV) decreases by about 2% with every 3°C. temperature rise. Even at 45°C., however, plutonium is stripped more easily than uranium.

HC Column Pu(IV) and Pu(VI) distribution ratios differ relatively little, the differences being a function of conditions, as indicated in Section C.

Traces of DBP increase the plutonium loss by formation of an organic-favoring compound analogous to that formed with uranium. The relative magnitudes of the uranium and plutonium loss increases due to DBP probably vary with conditions and have not been accurately established.

4.4 Decontamination from fission products

Decontamination from fission products is not a primary function of the HC Column. However, decontamination does occur to a small but significant extent, usually between two and 10-fold.

The decontamination obtained across the HC Column is due partly to reaction of some fission products with solvent degradation products, such as DBP, and probably also some compounds formed upon exposure of the diluent to radiation and nitric acid. Because of the very small weights of fission products involved, very small concentrations of solvent degradation products can have a significant effect on decontamination.

Iodine, which is extracted in the HA Column largely by the formation of addition compounds with unsaturated-hydrocarbon impurities in the diluent, remains largely in the organic phase during passage through the HC Column. Iodine decontamination factors across the HC Column are typically in the neighborhood of 25.

4.5 Uranium X_1 and X_2

Uranium X_1 and uranium X_2 entering the HC Column are practically quantitatively stripped into the aqueous phase, along with the uranium and plutonium.

5. Uranium-Plutonium Partition Cycle

5.1 General

The partitioning cycle, consisting of the IA, IB Extraction, IB Scrub, and IC Columns, effects further decontamination from fission products and separates the uranium and plutonium from each other.

In the IA Column the uranium and plutonium are extracted into the solvent phase, with additional decontamination, under essentially the same conditions as in the HA Column, described above.

In the IB Columns, uranium and plutonium are separated by reducing the plutonium to the aqueous-favoring, trivalent state by the addition of ferrous ion. The conditions of salting strength and flow ratios are controlled in such a way that a nearly quantitative separation of the two products is effected, the plutonium reverting to the aqueous phase and leaving the bottom of the IB Scrub Column, while the uranium leaves the top of the IB Extraction Column in the solvent phase.

The operation of the partition cycle is completed by stripping the uranium into an aqueous phase of low salting strength in the IC Column.

5.2 IA Column

The process conditions and functioning of the IA Column are identical with those of the HA Column, with exceptions noted below. Before introduction into the IA Column, the uranium and plutonium-bearing aqueous effluent stream from the HC Column is concentrated by evaporation and its composition is adjusted to essentially that of the HA Column feed. Even though the plutonium is almost entirely in the desired tetravalent state, sodium nitrate is added to stabilize the plutonium at that valence, because of the tendency of plutonium (IV) in nitric acid solutions to undergo partial oxidation to Pu(VI).

Over-all fission-product decontamination factors across the IA Column are normally on the order of 10 times lower than those obtained across the HA Column, because the most easily separable fission products have already been removed in the HAW. Almost all the fission-product radioactivity in the IA Column feed is normally due to ruthenium, zirconium, and niobium.

Unlike the HA Column, the IA Column employs a single scrub stream -- 3 M HNO_3, introduced at the top of the column. The approximately 0.2 M HNO_3 extracted from the scrub solution into the organic extract (IAP) eventually provides the salting strength needed in the IB Scrub Column for purification of the aqueous plutonium-bearing stream from uranium. Interposition of the IB Extraction Column between IA and IC results in the desired acidity reduction for IC Column product concentration.

5.3 IB Extraction Column

The organic extract stream (IAP), containing the uranium and plutonium, is pumped to the bottom of the IB Extraction Column, where it rises through a descending aqueous solution containing ferrous ion. The ferrous ion reduces the plutonium to its very sparingly extractable trivalent state, so that it is essentially quantitatively stripped into the aqueous phase. The uranium remains almost entirely in the organic phase, but about 1% of it accompanies the plutonium in the aqueous effluent stream from the IB Extraction Column. Essentially all of this stripped uranium is extracted into an organic phase in the IB Scrub Column. The IB Scrub Column organic

effluent, containing the extracted uranium, is introduced to the bottom of the IB Extraction Column, mixed with the IAP stream, so that this portion of the uranium, too, leaves the IB Column system with the organic IBU stream, to be fed to the IC Column along with the bulk of the uranium.

Addition of the 2BW to the IB Extraction Column feed (IBXF) results in recovery of the plutonium lost to that stream in the 2B Column. Such 2BW back-cycling does not significantly affect the operation of the IB Extraction Column. The 2BW volume is only about 3% of that of the IBXF.

Essentially complete removal of the plutonium from the uranium stream in the IB Extraction Column is dependent on essentially complete reduction of the plutonium to its trivalent state. The reduction of Pu(IV) to Pu(III) by ferrous ion is rapid: it is essentially complete in 3 to 5 minutes at 25°C. The reduction rate is not markedly affected by variations in nitric acid and uranium concentrations.

Since both Fe(II) and Pu(III) are autocatalytically oxidized by nitrate ion (to Fe(III) and Pu(IV), respectively), a "holding reductant" must be used to prevent such oxidation. Sulfamate ion fulfills the function of holding reductant, probably by the destruction of traces of nitrous acid, which is apparently involved in the autocatalytic oxidation mechanism, as discussed in Section B.

The ferrous and sulfamate ions may be introduced either in the form of a ferrous sulfamate solution or in a solution of ferrous ammonium sulfate and sulfamic acid. To insure essentially quantitative reduction, these chemicals are provided in several-fold stoichiometric excess.

The organic-to-aqueous-phase distribution ratio of Pu(III) under IB Extraction Column conditions is known to be less than 0.03 and is probably at least as low as 0.02.

The distribution of Pu(III) in the IB Extraction Column does not vary to an important extent with the nitric acid concentration. However, the fraction of uranium stripped into the aqueous phase increases with decreasing HNO_3 concentration. Also, the salting strength of the aqueous effluent from the IB Extraction Column must be sufficient to insure essentially quantitative extraction of the uranium in the IB Scrub Column.

At HW #3 Flowsheet conditions, on the order of 1/2 to 2/3 of the fission-product radioactivity leaves the IB Extraction-IB Scrub Column system with the uranium-bearing organic effluent (IBU); the remaining 1/3 to 1/2 with the plutonium-bearing, aqueous IBP stream. The effects of process variables, such as nitric acid concentration and extent of uranium saturation of the TBP, on the fission-product split between the organic and aqueous streams are generally qualitatively similar to the analagous effects in the HA Column.

UX_1 and UX_2 largely follow the uranium into the IBU stream. At HW #3 Flowsheet conditions on the order of 3% of the UX_1 goes with the plutonium into the IBP. The fraction of UX_1 accompanying the plutonium increases with increasing

uranium saturation of the TBP and decreases with increasing salting strength (aqueous-phase nitric acid concentration) in the IB Extraction Column. UX_1 and UX_2 are harmless in the uranium stream, into which they would in any case grow to an equilibrium concentration by the radioactive decay of U-238. In the absence of its beta-decay parent, UX_1, uranium X_2 is harmless in the plutonium stream also, because it quickly disappears by virtue of its 1.1-minute half life. UX_1, however, is a potentially important radioactive contaminant in the plutonium product stream.

Oxalic acid has received some consideration, but no exhaustive study, as an alternative U-Pu partitioning agent. Oxalic acid functions by forming an aqueous-favoring complex with Pu(IV). If suitable, it would have the advantage of decreasing the amount of solids in the aqueous waste stream, thus rendering concentration to smaller volumes potentially feasible.

5.4 IB Scrub Column

In the IB Scrub Column the uranium accompanying the plutonium in the aqueous effluent from the IB Extraction Column is essentially quantitatively extracted into the organic scrub stream (IBS). The plutonium is left in the aqueous phase. The separation duty of the IB Scrub Column is a heavy one: its aqueous feed contains approximately 20 to 60 times as much uranium as plutonium (when uranium irradiated to 600 to 200 megawatt-days/ton is processed); but the uranium-to-plutonium weight ratio in the IBP must be at least as low as 0.01, and preferably not higher than 0.001. In the plutonium solvent-extraction columns subsequent to the IB Scrub Column no further decontamination of the plutonium from uranium is achieved.

With respect to uranium extraction, the IB Scrub Column functions similarly to the extraction section of the HA Column. However, since the fission-product split in the IB Scrub Column is not normally an important consideration, a high degree of uranium saturation of the TBP (for good fission-product decontamination of the extract) is not sought. As indicated in Chapter V, a several-fold excess organic-phase flow over the minimum dictated theoretically by the uranium distribution ratio is normally employed, to insure the effective liquid-liquid contacting required for attainment of the desired high degree of uranium-plutonium separation.

The organic-to-aqueous-phase distribution ratio of Pu(III) at the top of the IB Scrub Column is estimated at 0.02. The small fraction of plutonium leaving the IB Scrub Column with the uranium-bearing organic effluent stream is largely returned to the aqueous phase in the IB Extraction Column.

5.5 IC Column

In the IC Column the uranium leaving the IB Extraction Column in the organic stream is stripped into an aqueous solution in a manner similar to its stripping in the HC Column. The traces of plutonium accompanying the uranium into the IC Column are also stripped. The IC Column feed volume rate is approximately 20% greater than that of the HC Column, as a result of the blending of the IB Scrub Column organic effluent with the IAP (partly also due to the addition of back-cycled 2BW to the IAP, the 2BW representing approximately 1/30 of the ICF volume). The ICX flow rate is the same as the HCX flow rate at HW #3 Flowsheet conditions. The ICX:ICF volume flow ratio of 1.47 is only about 20% above the theoretical minimum required for essentially

quantitative uranium stripping at 25°C. and represents approximately the minimum ratio sufficing in practice at that temperature.

Fission-product decontamination across the IC Column is slight -- on the order of 2-fold for gross fission-product radioactivity. Decontamination from iodine is on the order of 10-fold.

6. Final Uranium Decontamination Cycle

In the final uranium decontamination cycle, which comprises the 2D and 2E Columns, uranium is further decontaminated under conditions analogous to those of the preceding extraction-stripping cycles.

In the 2D Column uranium is extracted under conditions essentially identical with those in the HA Column. However, traces of plutonium accompanying the uranium into the 2D Column are retained in the aqueous-favoring trivalent state, by addition of ferrous sulfamate to the feed, in order to obtain further decontamination of the uranium stream from plutonium. The use of a split scrub stream, with water as the terminal scrub, is particularly important in the 2D Column, because a high corrosion rate in the 2EU Concentrator as a result of high acid carry-over from the 2D Column may result in excessive contamination of the uranium product with metallic impurities (Fe, Cr, Ni).

With the relatively inextractable fission products largely removed by the HA and IA Columns, 2D Column fission-product decontamination factors are usually considerably lower than those across the analogous columns upstream from it.

Pilot-plant tests, made at Oak Ridge with the co-decontamination cycle omitted, have indicated an approximately 3-fold improvement in ruthenium decontamination across the 2D Column upon treatment of the 2DF with NO_2 gas or with $NaNO_2$ at about 70°C. before addition of the ferrous sulfamate. If this is done, air must be bubbled through the 2DF solution between the NO_2 or nitrite treatment and the sulfamate addition, in order to remove excess nitrous acid, which would otherwise destroy the sulfamate ion and cause Fe(II) and Pu(III) to be oxidized.

With the plutonium essentially completely in the trivalent state, a Pu decontamination factor of about 100 across the 2D Column is typical.

The 2E Column strips the uranium into an aqueous phase in exactly the same way as the HC Column.

7. Cross-Over Oxidation

The "cross-over" oxidation step readies the plutonium-bearing aqueous product stream (IBP) from the uranium-plutonium partition cycle for further processing in the final plutonium decontamination cycle. In the IBP the plutonium is in its practically inextractable, trivalent state. In order to make possible further decontamination of the plutonium by extracting it away from the residual fission products requires reoxidation of the plutonium to its most extractable, tetravalent state. The oxidizing agent used is nitrous acid, actually produced in the acidic solution by addition of $NaNO_2$ (or, alternatively, of NO_2 gas). The oxidation is rapid even at room temperature, being carried to over 99% completion in 2 to 3 minutes. The cross-over oxidation step is carried out on a

continuous basis.

The oxidation rate could be increased by increasing the temperature, but such procedure would also accelerate hydrolysis of the TBP (and possibly the degradation of diluent) dissolved and suspended in the IBP solution, with possible adverse effects on plutonium losses and decontamination in the final plutonium decontamination cycle.

The ferrous ion in the IBP solution is converted to ferric in the crossover oxidation step.

Common oxidizing agents other than nitrous acid (or $NaNO_2$ or NO_2), such as ozone, hydrogen peroxide, potassium permanganate, and sodium dichromate, have the disadvantage of oxidizing an important fraction of the plutonium to Pu(VI). This is undesirable, because under the conditions of the 2A Column extraction section the organic-to-aqueous-phase distribution ratio of Pu(VI) is about 6 times lower than that of Pu(IV), with the consequence that several per cent of the Pu(VI) entering the 2A Column would normally be lost to the 2AW stream. Oxidation with $NaNO_2$ or NO_2 leaves the plutonium practically quantitatively in the tetravalent state.

For a discussion of the oxidation-reduction properties of plutonium reference is made to Subsection C6.

8. Final Plutonium Decontamination Cycle

8.1 General

In the final plutonium decontamination cycle, plutonium is extracted into the solvent phase in the 2A column and returned to the aqueous phase in the 2B Column. A large fraction of the fission products entering the system with the plutonium are left in the aqueous waste effluent from the 2A Column.

The discussion under 8.2 and 8.3, below, is primarily in terms of the "conventional" method of operation of the 2A and 2B Columns. This method is analogous to the operation of the co-decontamination cycle. An alternative procedure involves return of a large fraction of the 2B Column aqueous product to the top of the 2A Column as reflux. The relative merits of the reflux flowsheet are discussed under 8.4.

8.2 2A Column

The 2A Column, like the HA, IA, and 2D Columns, is a dual-purpose column, with an extraction section below the feed point and a scrub section above it. Its function is to decontaminate the plutonium to an additional extent from fission products and UX_1. The general nature of the 2A Column process is analogous to that involved in the HA Column.

Essentially quantitative extraction of the plutonium in the 2A Column depends on its being essentially quantitatively in its tetravalent form.

The organic-to-aqueous distribution ratio of Pu(IV) at 2A Column extraction-section conditions (5.5 M HNO_3 in the aqueous phase) is approximately 30, that of Pu(VI) is about 5, while the Pu(III) distribution ratio is estimated at 0.05. At HW #3 Flowsheet conditions several per cent of any Pu(VI) entering the 2A Column would be expected to be lost to the 2AW stream. Any Pu (III) entering would go almost quantitatively into the waste stream.

Since the 2A Column contains no uranium competing with the plutonium for the TBP in the organic phase, a low solvent flow suffices. Under HW #3 Flowsheet conditions the 2AX (solvent) flow rate is 4.5 times less than the extraction-section aqueous-phase volume flow. The magnitude of the required solvent flow is governed by the liquid-liquid contacting effectiveness of the column (number of transfer units). In the course of plant experience some reduction in the 2AX flow below the flowsheet value may be found feasible without prohibitive increase in plutonium losses, although the 2AX flow must probably exceed by several-fold the theoretical minimum dictated by the distribution ratio (1/30 of the aqueous-phase volume rate if the plutonium is quantitatively in the tetravalent state). A fairly close approach to the theoretical minimum 2AX flow would be expected to increase plutonium losses sharply due to increased scrub-section reflux of the plutonium.

The relatively low acidity of the scrub stream (0.5 M HNO_3) results in fairly substantial reflux of plutonium from the scrub section to the feed point, by a mechanism similar to that discussed in connection with the HA Column in Subsection 3. The reflux build-up of the Pu(IV) concentration at the feed point, at HW #3 Flowsheet conditions, is estimated to be as large as 2-fold. It would be several times larger for Pu(VI).

The Pu(IV) distribution ratio is relatively insensitive to variations in the aqueous-phase nitric acid concentration between 4 and 6 M. But upon decreasing the HNO_3 concentration from 4 M to 2 M the Pu(IV) organic-to-aqueous-phase distribution ratio decreases from about 25 to about 8.

The over-all fission-product decontamination factor across the 2A Column is typically in the neighborhood of 25 to 50. The fission products of principal concern are normally ruthenium, zirconium, and niobium. Most of the ruthenium decontamination is believed to occur at the high-acid feed point, while the low-acidity scrub section is relied on primarily for zirconium and niobium decontamination.

As in the HA Column, an increase in feed-point acidity improves decontamination from ruthenium but impairs decontamination from zirconium and niobium. In the vicinity of the HW #3 Flowsheet 2A Column conditions these effects are very pronounced: upon increasing the HNO_3 concentration in the aqueous phase from 2 through 4 to 6 M, the organic-to-aqueous-phase distribution ratio of ruthenium decreases approximately from 0.03 through 0.006 to 0.002; while that of zirconium increases from 0.04 through 0.2 to 0.7 and that of niobium from 0.01 through 0.03 to 0.1.

Some decontamination of the plutonium from UX_1 is obtained across the 2A Column, but the extent of this decontamination is uncertain. (Conflicting

experimental UX_1 decontamination findings range from 1.3-fold to 30-fold, as discussed in Subsection C5.)

DBP probably causes some improvement in fission-product decontamination across the 2A Column, while MBP increases plutonium losses, in a manner similar to the corresponding effects in the HA Column.

8.3 2B Column

In the 2B Column the plutonium is stripped into an aqueous phase in a manner similar to the stripping of uranium and plutonium in the HC Column. Although decontamination is not a primary function of the column, fission-product decontamination does occur to a slight extent (on the order of 2-fold).

The 1:2 2BX:2BF volume flow ratio is approximately 8 times the theoretical minimum dictated by the Pu(IV) distribution ratio. The 2BX flow requirement is determined by the need of effective liquid-liquid contacting in the column. Some reduction from the 1:2 2BX:2BF ratio may be feasible at otherwise favorable column operating conditions without excessive plutonium loss.

8.4 Reflux flowsheet

As an alternative to the conventional method of operation of the 2A and 2B Columns as discussed above, a large fraction of the 2BP may be returned as reflux to the top of the 2A Column. The chemical flowsheet presented in Chapter I shows this alternative method of operation, as well as the conventional method. On the basis of the reflux flowsheet all but 4% of the 2BP stream is returned to the 2A Column.

The reflux flowsheet has two potential advantages over the conventional 2A-2B process: (a) it leaves the plutonium product in a solution about 25 times as concentrated as the conventional-flowsheet 2BP, thus eliminating the need for evaporation; and (b) it may provide a several-fold improvement in fission-product decontamination.

Under reflux-flowsheet conditions the 2A and 2B Columns would hold up several kilograms of plutonium. This would necessitate review of plant critical-mass control procedures before adoption of the reflux flowsheet.

Because of the high plutonium concentrations prevailing at the top of the 2A Column and at the bottom of the 2B Column under reflux-flowsheet conditions, plutonium losses from the 2B Column and probably also from the 2A Column would normally be several times higher than at conventional-flowsheet conditions. This, together with the possibility of very high losses upon off-standard operation, would make back-cycling of the 2AW and 2BW to the process a practical necessity.

For an operating diagram analyzing the behavior of plutonium in the 2A and 2B Columns under reflux-flowsheet conditions, reference is made to Chapter V.

9. Supplementary Decontamination by Sorption

Supplementary decontamination of the uranium product stream from zirconium and niobium may be obtained by adsorption of these fission products on silica gel. Supplementary decontamination of the plutonium product from uranium and fission products, together with volume reduction, may be obtained by adsorbing plutonium, along with some of the impurities, on Dowex 50 ion-exchange resin and then selectively eluting the plutonium.

No equipment for carrying out these sorption steps is included in the original Purex-Plant design. However, the design makes provision for possible future installation of such equipment, if needed to meet stringent purification requirements.

9.1 Silica-gel adsorption for uranium clean-up

Uranium product solution (2EU concentrate) may be decontaminated from residual zirconium and niobium, about 3 to 20-fold, by passage under appropriate conditions through a bed of silica gel. The uranium itself and any plutonium, ruthenium, or rare-earth elements which this solution may contain are not adsorbed to an important extent.(180,181,220)

Preparation of the silica gel for the adsorption process involves flushing with boiling water, cold 1 M HNO_3, and finally cold water, to remove fines, which would decrease feasible throughput rates, and soluble silica, which might contaminate the product. (If inadvertently returned to the solvent-extraction process, dissolved silica or suspended fines may cause severe emulsification in the pulse columns.)

Decontamination improves, but feasible throughput rate decreases, with decreasing silica-gel particle size. Particles in the 80-mesh size range represent a possible compromise, permitting an approximately 100 gal./(hr.)(sq. ft.) throughput.

A high liquid flow rate impairs decontamination. Accordingly, better decontamination may be obtained by processing 2EU concentrate than by processing unconcentrated 2EU.

A bed depth of several feet is desirable to minimize loss of decontamination due to normal channeling of the liquid through the bed.

The HNO_3 concentration range for best decontamination is 0.6 to 1.0 M.(76,177,208)

The sorption capacity of silica gel for zirconium and niobium is high: the capacity for zirconium is in the neighborhood of 5 mg./gram of silica gel. Partial saturation of the bed with zirconium and niobium impairs the decontamination factor obtained in the step, partial elution of the Zr and Nb by the uranium solution being processed increasing with increasing amounts of Zr and Nb in the bed. In an unshielded or only lightly shielded installation, the useful life of the bed between regenerations may also be limited by the radio-

activity imparted to the bed by the adsorbed radioelements.(82,176,177,209,222)

An excessively Zr-Nb contaminated silica-gel bed can be regenerated with oxalic acid. Five washes of 1.25 bed volumes each of 0.4 M oxalic acid at 85°C. remove over 99% of the radioactivity. Prior to regeneration with oxalic acid the uranium solution held up in the bed is displaced with water or 1 M HNO_3, to prevent loss of the uranium to the elution waste.(151,181,208,220,227)

9.2 Ion exchange for plutonium-product treatment

Adsorption of plutonium on Dowex 50, followed by its selective elution, makes possible not only supplementary decontamination from uranium, fission products, and non-radioactive impurities, but also an up to 250-fold plutonium product solution (2BP) volume reduction.(210)

Dowex 50 is a sulfonated styrene-type cation-exchange resin. Oak Ridge investigators have obtained good results with 12% cross-linked 50 to 100-mesh particle-size resin. Because of batch-to-batch variations in the properties of the resin, a performance pre-test is desirable. For a good batch of Dowex 50 the pre-test shows 0.18 g.Pu(III) adsorbed per ml. of resin from 0.15 M HNO_3. Pretreatment, with 20 bed volumes of 6 M HNO_3, followed by 10 volumes of H_2O, than 20 of 6 M HCL, has been found empirically to be advantageous for consistent good performance.(217)

Plutonium is reduced to the trivalent state, with hydroxylamine as the reducing agent, before adsorption, even though Pu(IV) is adsorbed more strongly, in order to facilitate the subsequent selective elution. Uranium is adsorbed less strongly than plutonium and must accordingly be eluted first, if it is to be separated from the plutonium stream. Zr, Nb, iron, and most other impurities are held on the resin more strongly than plutonium and stay on it while plutonium is eluted. Over 100-fold separation from uranium, about 30-fold from zirconium, and 10 to 20-fold from niobium may be obtained. Decontamination from ruthenium takes place to a much lesser extent than decontamination from zirconium and niobium, decontamination factors of only 2 to 3 being obtained. Five-fold decontamination from iron has been reported.(210,220,223,228)

Plutonium sorption is best at about 0.15 M HNO_3 but varies little with HNO_3 concentration in the 0.15 to 0.5 M range.(213)

A satisfactory eluting solution for uranium is 0.5 M H_2SO_4, 0.05 M hydroxylamine sulfate. The plutonium is eluted with 5.7 M HNO_3, 0.3 M sulfamic acid. A high acidity in the plutonium-eluting solution results in a high plutonium concentration in the effluent: 29-g./l. plutonium solution is obtained with 3.2 M HNO_3 in the eluting solution; 52 g.Pu/l., with 6 M HNO_3. With downflow adsorption feed, the plutonium is adsorbed at the top of the bed; the uranium, further down. Accordingly, the uranium is eluted with a downward flow of eluting solution, the plutonium with an upward flow.(177,213,221,228)

[redacted]

Plutonium losses of well under 0.01% over the sorption-elution cycle have been reported. Superficial flow rates in the neighborhood of the following have been found satisfactory: 100 gal./(hr.)(sq. ft.) during sorption, 30 for uranium elution, 3 for plutonium elution.

Gas evolution from the Dowex 50 bed has sometimes been observed and has been recognized as a potential operating problem. The causes of the gassing are not fully understood, but it is known that severe gassing occurs whenever Pu(III) on the resin is oxidized to Pu(IV), although gassing sometimes occurs even in the absence of such oxidation.[221]

Reconditioning of the bed after the plutonium elution step may be accomplished by upflow of 2 to 3 bed volumes of 0.1 M HNO_3, 0.1 M NH_2SO_3H solution.

The bed may be decontaminated from zirconium and niobium with 4 bed volumes of 0.5 M oxalic acid. After such decontamination it must be reconditioned before reuse, with 4 bed volumes of 0.1 M HNO_3 giving satisfactory reconditioning.

B. PROPERTIES OF PROCESS MATERIALS

Summarized in this section are available data on those physical and chemical properties of materials involved in the Purex solvent-extraction process which are most relevant to the process, with two exceptions: solvent-aqueous-phase equilibrium data are presented in Section C; and data readily available from standard handbooks (e.g., the properties of nitric acid and caustic soda) have been omitted.

1. Tributyl Phosphate

1.1 Introduction

Tri-n-butyl phosphate (TBP), $(C_4H_9O)_3PO$, is a viscous, colorless liquid which is produced by the reaction of n-butyl alcohol with either phosphorus oxychloride ($POCl_3$) or phosphorus pentoxide (P_2O_5), with subsequent caustic treatment and distillation. It is used as the extractant in the Purex solvent-extraction process because of the specificity of the strong complexes it forms with uranium and plutonium. In order to produce an organic phase with the optimum physical and chemical properties, TBP is diluted with a chemically inert, petroleum hydrocarbon fraction boiling in the kerosene range. (See Section A of this chapter for a more detailed discussion.)

1.2 Specifications

The specifications for TBP are given in the following table:[116]

Butanol content	Reducing normality less than 0.05
Acidity	Less than 0.01 N
Color	Colorless
Water content	No turbidity when 1 volume is mixed with 19 volumes of 60° Bé. gasoline at 20°C.
Suspended solids	Nil
Specific gravity	0.973 to 0.983 (20/20°C.)

1.3 Physical properties

The physical properties of TBP are presented in Table IV-1. The properties listed are those considered to be of fundamental interest in the Purex process. The solubilities of TBP and TBP-diluent mixtures in water and various process solutions are given in Figure IV-5 and are discussed under 3.2, below.

The vapor pressure of TBP is very low, being about 0.006 mm. of Hg at 25°C. It increases logarithmically with temperature from 15 mm. of Hg at 173°C. to 760 mm. Hg at 289°C.(100) A plot of vapor pressure versus temperature for TBP is given in Figure IV-3.

During laboratory studies of the concentration of TBP-saturated aqueous solutions by evaporation, it was found that for solutions containing electrolytes such as uranyl nitrate, the TBP content dropped in accordance with its normal solubility, i.e., followed the decreased water activity, and no accumulation of TBP or its decomposition products occurred. When a slight excess of TBP was added prior to the evaporation, the excess was distilled out rapidly. From the data obtained, the ratio of the vapor pressure of TBP to that of water was estimated to be 1.3×10^{-3} at 100 to 130°C. This ratio multiplied by the ratio of molecular weights (266/18) gives 1.9×10^{-2} as the weight ratio of TBP to H_2O resulting from steam distillation.(122)

1.4 Radiation stability

The effects of radiation on TBP in the Purex process were evaluated with respect to its use in processing short-"cooled" spent fuel from the Homogeneous Reactor.(214,218) Changes in extraction and stripping behavior in regard to uranium, plutonium, and fission products, upon irradiation of a TBP-Amsco-diluent solvent, indicated hydrolysis of the TBP to di- and monobutyl acid phosphates. This result, observed in batch tests, was further verified in continuous countercurrent operations with solvent, irradiated (both in the presence and absence of UNH and nitric acid) by means of a Co-60 source.(84) The hydrolysis effect, as measured by formation of "inextractable" U and Pu (determined in A-type contacts) was not significant until the radiation dosage exceeded 0.2 to 2.0 watt-hours per liter. This irradiation is 10 to 200-fold greater than the 0.01 to 0.02 watt-hours/liter of solvent expected in the Purex HA Column processing pile fuels "cooled" 90 days (260-day irradiation, 600 MWD/T), with an assumed 5 to 10-min. solvent holdup in the extraction section.

Over-all beta and gamma decontamination factors of the order of 10^6 obtained with Hanford slugs in O.R.N.L. pilot-plant runs, together with over-all uranium losses of the order of 0.01 to 0.1%, further confirm the radiation stability of TBP.(220)

1.5 Chemical properties

1.51 General

The chemical properties of TBP are those typical of esters derived from

inorganic acids. The formation by TBP of coordination complexes with uranium and plutonium nitrates, with nitric acid, and to a much lesser extent, with fission-product and other nitrates are of basic process importance. These complexes determine the solvent-extraction behavior of the solutes in the process in accordance with the principles discussed in Section A and the data presented in Section C. Hydrolysis, the reaction of interest in the Purex process, is discussed in the next paragraphs. Tributyl phosphate has no active hydrogen atom and only moderate surface-active properties. The butyl acid phosphates, however, are compounds capable of forming strong, undesirable complexes with uranium, plutonium, and fission products, and acting as emulsifying and foaming agents during extraction, stripping, and calcination. The process effects of TBP hydrolysis products are discussed in Section A of this chapter, while quantitative data on the effects of the acid phosphates on distribution ratios are presented in Section C.

1.52 Hydrolysis

The hydrolysis or de-alkylation of tri-n-butyl phosphate is of major importance to the Purex process since the hydrolysis products are known to affect the fission-product decontamination and uranium and plutonium losses adversely, as well as being partially responsible for the formation of emulsions in the columns and foaming in the UO_3 calcination pots.

Tributyl phosphate hydrolyzes in either acid or alkaline media. The acid hydrolysis proceeds through the acid phosphates, dibutyl phosphate (DBP), and monobutyl phosphate (MBP), to orthophosphoric acid (H_3PO_4) and butyl alcohol by the cleavage of the oxygen-to-carbon bonds. Alkaline hydrolysis occurs mainly in the aqueous phase by the breaking of the oxygen-to-phosphorus linkages, and stops with the formation of the alkaline salt of dibutyl phosphate.(2, 19,212)

Since the Purex process employs nitric acid as a salting agent, the acid hydrolysis of TBP is of primary concern.

The rate of hydrolysis of TBP in a two-phase system is presented as a function of temperature in Figure IV-1. The rate is expressed as the per cent of TBP reacted per hour, and is given for 100 per cent TBP and 20 weight per cent TBP in odorless kerosene at concentrations of 1 and 5 M HNO_3 in the aqueous phase over the temperature range from 0 to 100°C.(47) In a two-phase system, the rate of hydrolysis of TBP is so much faster in the organic phase than that in the aqueous phase that the rate of hydrolysis of TBP in a two-phase system is essentially independent of the hydrolysis rate of the small concentration of TBP dissolved in the aqueous phase. The reaction may be regarded as zero order with respect to organic-phase HNO_3 concentration (determined by the concentration in the adjacent aqueous phase) and first order with respect to TBP concentration and has no induction period.(47,205) As shown in Figure IV-1, the rate of hydrolysis increases at any given temperature as the concentration of HNO_3 in the aqueous phase increases, but decreases as the TBP concentration in the organic phase is reduced by dilution with kerosene.

Similar results were obtained by measuring the rate of increase of DBP (the rate of hydrolysis of TBP minus the rate of hydrolysis of DBP) in two-phase systems of equal volumes of TBP-hydrocarbon diluent and UNH-HNO_3 solutions at different temperatures. In addition to showing the effects of HNO_3 concentrations and temperature, the following table also shows that UNH concentration has little or no effect on the hydrolysis of TBP.(153,164)

RATE OF INCREASE OF DBP CONCENTRATION

Equal volumes of TBP-hydrocarbon diluent and UNH-HNO_3 solutions

Composition of Phases Before Equilibration			
Aqueous Phase		Organic Phase, Vol. % TBP in Diluent(a)	Increase of DBP at 50°C., % per Day(b)
UNH, M	HNO_3, M		
2.0	6.0	12.5	0.105
2.0	2.0	12.5	0.037
2.0	0.2	12.5	0.011
0.11	6.0	12.5	0.105
0.11	2.0	12.5	0.022
0.11	0.2	12.5	0.009
0.25	0.05	20	0.0013(c)

Notes:

(a) Shell Deodorized Spray Base.

(b) Values considered high by a factor of approximately 2 due to presence of light.(164)

(c) 25°C.

The rates of hydrolysis of DBP or MBP are not accurately know, but it has been shown empirically that TBP hydrolyses faster than DBP, and DBP faster than MBP.(15,153,164,205)

In the degradation of pure TBP to orthophosphoric acid in a single-phase aqueous system of UNH and nitric acid, it appears that the hydrolysis of MBP to H_3PO_4 is the rate-controlling step at temperatures below 100°C.(153), but since the decomposition temperature of MBP is 105 to 110°C.(31), DBP hydrolysis and not that of MBP must be considered as the rate-controlling step at temperatures much above 100°C. Hydrolysis rates for TBP in a single-phase aqueous system are reported to be either zero or first order with respect to the HNO_3 concentration.

Some approximate single-phase rate constants for the acid hydrolysis of TBP, DBP, and MBP in aqueous 0.11 M UNH, nitric acid solutions at reflux temperatures (ca. 100°C.), are listed in the following table.(153)

HYDROLYSIS RATE CONSTANTS OF TBP, DBP, AND MBP

In 0.11 M UNH - HNO_3 Solutions at Reflux Temperatures

HNO_3, M	Fraction Decomposed/Hr.		
	TBP	DBP	MBP
6.0	0.61	0.20	0.14
2.0	0.113	0.043	0.03
0.2	---	0.014	---

Note: Only the amounts of acid phosphates soluble in aqueous phase were present.

The rate of hydrolysis of TBP to DBP in a 1 M solution of NaOH is approximately the same as that for 1 M HNO_3 over a temperature range of 20 to 100°C.(47) However, since the alkaline hydrolysis occurs mainly in the aqueous phase(23,24, 40,47), the amount of hydrolysis is dependent upon the solubility of TBP in the aqueous solution (see 3.2, below) and the aqueous-phase volume.

Values for the rates of hydrolysis of TBP in single (aqueous) or two-phase systems vary fairly widely depending on the method used to determine these rates.(119,205) Recent studies have shown that factors such as the nitrite ion concentration in the HNO_3(21), chemical composition of the diluent(47,205), method of pretreating the TBP(40), presence of air(215), as well as the acidity of the aqueous phase(153,164), and radiation(84,198), influence the rate of hydrolysis of TBP. In view of these factors, it is evident that only relative values can be assigned to hydrolysis rates under Purex-process conditions. However, the rates stated above and plotted in Figure IV-1 are believed to be applicable to Purex HW #3 Flowsheet conditions within a factor of 2.

By extrapolating the data in Figure IV-1 it is estimated that the rate of acid hydrolysis in the HA and 2A Columns will be approximately 0.001 and 0.0002 per cent TBP per hour, respectively.

1.53 Rapid reactions with uranyl nitrate and nitric acid

TBP reacts with hot, highly concentrated solutions of uranyl nitrate and nitric acid exothermically with varying degrees of vigor. The vigor of the reaction depends on the heating rate and composition. At conditions most conducive to it, the reaction assumes explosive violence. However, no reaction takes place at atmospheric pressure until enough water and nitric acid have been distilled to permit the temperature of the charge to rise above 135°C. (78% uranyl nitrate).

The vigor of the reaction increases with the TBP/uranyl nitrate ratio.

Highly concentrated uranyl nitrate solutions yield a self-sustained reaction with TBP even in the absence of nitric acid, but when HNO_3 is present,

the reaction is more vigorous.

The system TBP-HNO_3-water reacts with considerable violence if heated rapidly to temperatures above 150°C. Reaction at a moderate rate has been reported to occur under some conditions at 140°C.(26)

The rapid reactions are accompanied by evolution of nitrogen oxides, but the exact nature of the reactions has not been determined.

Rates of pressure rise determined in closed-container experiments, varied from 250 to 1020 lb./(sq. in.)(sec.). The pressure increases developed by the reactions varied from 150 to 1200 lb./sq. in. The higher pressure increases were obtained in conjunction with the higher pressure-increase rates.(85)

Purex-process conditions do not approach those under which the above-discussed rapid reactions can take place. Chapters VII and X describe safeguards employed in the uranium, plutonium, and acid concentration steps to prevent such conditions from arising accidentally.

1.54 Other reactions

Recent studies made with Uranium Recovery Plant solvent (20 volume per cent TBP in Shell E-2342 diluent) have produced evidence that the yellow color of reused solvent is not entirely due to the nitration of diluent, (discussed under 2.4, below) but that butyraldehyde, formed by the oxidation of butanol, undergoes an aldol condensation in the presence of sodium carbonate, during solvent retreatment forming products which are yellow. Materials with similar infrared spectra have been prepared synthetically from butyraldehyde.(156)

1.6 Properties of DBP and MBP

The physical properties of dibutyl phosphate, $(C_4H_9O)_2(OH)PO$, and monobutyl phosphate, $(C_4H_9O)(OH)_2PO$, are listed in Table IV-1 along with the properties of TBP. This table shows the increase of density and viscosity of the butyl phosphates in going from TBP to MBP. The decomposition temperatures of DBP and MBP are 190° to 200°C. and 105° to 110°C., respectively.(31)

The solubility of DBP in water is retrograde (i.e., decreases with increasing temperature) going from 24 g./l. at 10°C. to 5 g./l. at 95°C. In nitric acid solutions of from 1 to 4 M, the solubility of DBP varies from about 6 to 14 grams per liter over a temperature range of 0 to 100°C. The solubility values go through a minimum with respect to temperature with the numerical values of the minimum increasing as the acid concentration increases.(119)

Monobutyl phosphate is more soluble in water than is DBP and, in two-phase systems, favors the aqueous rather than organic phase (15% TBP-hydrocarbon diluent).(119) This is the reverse of DBP behavior when the DBP

concentration is greater than 0.05%, although DBP also favors the aqueous phase at concentrations less than 0.05% with its distribution to the aqueous phase increasing as the DBP concentration decreases.(165)

The chemical properties of DBP and MBP differ from TBP and from each other due to the difference in acidic character. The dibutyl acid ester has one titratable hydrogen with a pK value of 1.8, and MBP has two with pK values of 1.9 and 6.6, respectively.(8,119) It has been postulated that the acid hydrogens are responsible for the decrease in organic solubility and increase in aqueous solubility as they replace the butyl radicals, due to hydrogen bonding.(119)

Both DBP and MBP form compounds with uranium (VI), viz., $UO_2[(C_4H_9)_2PO_4]_2$ and $UO_2C_4H_9PO_4$.

The following solubilities have been determined for the compounds:(119)

Compound	Solubility, G.U/L. In Water	In 1 M HNO_3	In 15% TBP-85% Deobase (by Vol.)
$UO_2C_4H_9PO_4$	0.07	3.3	0.08
$UO_2[(C_4H_9)_2PO_4]_2$	0.0026	0.016	12.1

Compounds are also formed between MBP and DBP and Pu(IV) and Pu(VI), whose solubilities are comparable to those of the uranium compounds. For example, the solubility of the Pu(IV)-MBP compound in 0.6 M and 15 M HNO_3 is 0.31 and 43 mg.Pu/l., respectively. The solubility of the Pu(III)-monobutyl phosphate compound is reported to be at least 1600 times greater than that of the Pu(IV)-MBP compound, $Pu(C_4H_9PO_4)_2$, in the presence of 3 M HNO_3.(108) Purex pilot-plant data have shown, however, that compounds are not formed with Pu(III) and DBP.(205)

It has been reported that iron and chromium compounds are formed with DBP which are practically insoluble in nitric acid solutions.(231) There is some evidence that the ferrous iron compound of DBP may exist as a colloid in Purex solvent and cause the formation of stable emulsions.(204)

When contacted with sodium hydroxide or carbonate solutions, DBP and MBP (and their Pu and U compounds) form aqueous-soluble sodium salts.(40)

The rates of hydrolysis of the butyl acid phosphates are discussed under 1.42, above.

2. Diluent

2.1 Introduction

The diluent for TBP in the Purex process is a highly refined hydrocarbon mixture, boiling in the kerosene range (190° to 270°C.). Some commercially

available solvents meeting specifications for the diluent are obtainable under trade names such as Soltrol-170* (Phillips Chemical Co.), Shell Deodorized Spray Base, Shell E-2342, Amsco (American Mineral Spirits Co.), Ultrasene (Atlantic Ref. Co.), Bayol-D (Standard Oil of N.J.), and Deobase (Sonneborn Co., N.Y.C.).

2.2 Physical properties

The physical properties of some of the commercially available diluents that have been used or considered during the development of the Purex process are given in Table IV-2.

The following physical properties apply to commercial grade kerosene(32) and are comparable to those of the diluent employed in the Purex process:

Heat of vaporization	60 cal./g.
Surface tension	28 dynes/cm. at 20°C.
Interfacial tension (oil-water interface)	48 dynes/cm. at 20°C.
Upper explosive limit (U.E.L.) in air	6.0 volume per cent
Lower explosive limit (L.E.L.) in air	1.2 volume per cent
Ignition temperature	490°F.

The boiling ranges of six commercial diluents are given in Figure IV-2, showing the boiling point plotted against the percentage of the total volume distilled. The curves for Deobase, Ultrasene, and Shell Deodorized Spray Base are similar, indicating that they are composed of hydrocarbons in approximately the same molecular-weight range. The narrow boiling ranges exhibited by Amsco 123-15 Naphtha, Amsco 125-90W, and Soltrol 170, indicate that these diluents are the result of a more selective refinement or processing than the others listed.

The vapor pressure of the diluents at various temperatures is similar to kerosene and can be obtained approximately from the following equation:

$$\log_{10} p = 7.08 - \frac{2100}{T} \quad \text{.....(1)}$$

where p = mm. of Hg; and

T = degrees Kelvin.

---

*) Tentatively selected for the Purex Plant at the time of writing.

The vapor pressures from 0.1 to 3000 mm. of Hg for three equal-volume cuts of Deobase diluent are plotted over a temperature range of 40° to 280°C. in Figure IV-3. These data may be considered as approximately applicable to most Purex diluents.(100)

The solubility of diluent in water is very slight. For example, the solubility of Shell E-2342 diluent in water is less than 0.004 gram per liter at 25° and 50°C.(17)

2.3 Radiation stability

Hydrocarbon diluents have been successfully used in extensive Purex-process pilot-plant studies at Oak Ridge National Laboratory, at full Hanford radiation levels, although slight radiation-induced decomposition of some diluent components probably occurs.

Evolution of hydrogen and methane gas has been noted upon exposure of a hydrocarbon diluent to very high gamma irradiation (30 watt-hours/liter, i.e., on the order of 200 times the Purex-Plant exposure).(55)

2.4 Chemical properties

Inertness towards chemical reactions with process materials and radiation were major considerations in choosing the diluent.(131) Except for the possible presence of traces of aromatic and olefin hydrocarbons, the diluent used in the Purex process is chemically unreactive in contact with process solutions at ambient temperatures under normal operating conditions.

Amsco 125-90W, which meets the specifications with regard to aromatic and olefin content, will react with 3 M HNO_3 at 105°C. with the formation of diluent nitration products and oxides of nitrogen.(119) A two-phase system composed of an equal volume of organic phase (15 volume per cent TBP in Amsco 125-90W) and 3 M nitric acid reacts as soon as the boiling point is reached (105°C.), and the reaction proceeds until the nitric acid concentration in the organic phase has changed after 6 days from 0.20 M to 0.07 M, and in the aqueous phase from 1.5 M to 0.5 M. No decomposition is noted under similar conditions at 70°C. Shell Deodorized Spray Base, refluxed with 13 times its volume of 8 M HNO_3 for 4 hours, was approximately 50 to 75 per cent nitrated, but only about 0.1 per cent was nitrated when steam distilled from 8 M HNO_3 over a period of 3 hours with an overhead aqueous-to-organic volume ratio of 10.(139) Continuous contact of 30 per cent TBP in Amsco 123-15 with 6 M HNO_3 for 17 days resulted in 0.02 per cent fixed nitrogen at room temperature and 0.5 per cent at 67°C. in the organic phase.(219)

The amber color associated with used or reprocessed solvent in the Purex process is partially due to the nitration of the diluent, but also may be caused by the oxidation of butanol. (See B1.44.) Investigations with 30 per cent TBP in Amsco 123-15 diluent (11 per cent aromatics) indicate that neither HNO_3 nor HNO_2 alone at room temperature cause any coloration, but that the system HNO_3-HNO_2, which produces N_2O_4 gas, is responsible for nitration of the diluent and consequent color formation.(209) The stability of HNO_2 in the

Purex process has been found to be dependent on the aqueous-phase HNO_3 concentration and the amount of air present.(209)

Nitrogen oxides are known to nitrate aromatics and olefins and also to oxidize carbon side chains of aromatic nuclei to carboxylic acids at room temperature, although the reactions are exceedingly slow. The reactions of nitrogen oxides with naphthenes or paraffins occur in the vapor phase and very slowly in the liquid phase at room temperatures.(55)

Investigations of the stability of diluents to HNO_3 and HNO_2 have shown that naphthenic-type diluents (such as Shell E-2342, which contains approximately 80% naphthenes) are less stable to nitration reactions than paraffinic diluents (e.g., Soltrol-170, which is 100% paraffins).(20,165a)

Preliminary separations of nitration products from Uranium Recovery Plant spent solvent (RCW) and Shell E-2342 have shown that compounds of the general classification of alkyl nitrites, alkyl nitrates, aliphatic nitro and nitroso compounds, and carboxylic acids, are formed.(165a)

Purex pilot-plant studies have shown that there is a considerable accumulation of iodine in recycled solvent, and that the iodine is chemically bonded rather than dissolved molecular iodine.(220) Independent studies, using tracer I-131 in the form of I_2 and HI, have indicated that the I_2 reacts with the hydrocarbon diluent in the presence of HNO_3 and is not removed by washing with aqueous 0.1 M NaOH solution at 75°C.(222) By contacting 5 M HNO_3 containing 1 gram per liter I_2 with hexane for one hour at 25°C., it was found that 70 per cent of the iodine was taken up by the hexane. Under the same conditions, commercial benzene absorbed no iodine, Amsco 125-90 absorbed 73 per cent of the iodine present, and Amsco 123-15, 40 per cent. After eight washes with concentrated sulfuric acid to remove the aromatics (viz., the iodination-susceptible alkylated aromatics), Amsco 123-15 took up 20 per cent of the iodine present, or about 0.2 grams of iodine per liter of diluent.

3. Solvent-Phase Solutions

3.1 Tributyl phosphate-diluent systems

The density of TBP-diluent mixtures may be calculated from the following equation:(113)

$$d_{Mixture} = 0.972\ N_{TBP} + N_{Diluent}\ d_{Diluent} \quad \text{.....(2)}$$

where d = density at 25°C. in g./ml.;

N_{TBP} = volume fraction of TBP; and

$N_{Diluent}$ = volume fraction of diluent.

An equation for the calculation of the densities of TBP-diluent mixtures at various temperatures is given under 3.2, below. For temperatures between

20 and 70°C.[186,220], the density of 30 volume per cent TBP in diluent decreases approximately 0.0008 grams per milliliter per °C. The approximate densities of TBP-diluent mixtures (15 to 45 volume per cent TBP) at temperatures from 10 to 70°C. can be obtained from Figure IV-4.

The refractive index (R.I.) of water-free TBP-diluent mixtures at 25°C. can be calculated from the following equation:

$$R.I._{Mixture} = R.I._{Diluent}(1-N) + 1.4226\ (N) \quad \ldots\ldots\ldots\ldots\ldots (3)$$

where R.I. = the index of refraction measured at 25°C. (n_D^{25}); and

N = the volume fraction of TBP in mixture.

With a typical batch of Soltrol-170 diluent, the R.I. at 25°C. decreases linearly from 1.4289 to 1.4226 as the TBP concentration increases from 0 to 100 volume per cent; with Shell Deodorized Spray Base, from approximately 1.4435 to 1.4226.

The presence of water in the solvent lowers the R.I. [122], the amount of decrease being directly proportional to the water content. (The solubility of water in solvent is discussed under 3.2, below.)

The viscosity, η (in millipoises), of water-saturated TBP-diluent mixtures at temperature, T, may be calculated from the equation:[113]

$$\log_{10}\eta_{Mixture} = N_{TBP}\ (1.345 + 0.36\ N_{TBP}) + N_{Diluent}\ \log_{10}\eta_{Diluent} \ldots (4)$$

where N_{TBP} = volume fraction of TBP; and

$N_{Diluent}$ = volume fraction of diluent.

The constants in the equation take into account the non-ideality of the solution, the varying water content as a function of TBP concentration, and the non-proportionality of the volume fraction with the mole fraction. The calculated value of 30 volume per cent TBP in Shell E-2342 and in Soltrol-170 diluent is 20 and 24 millipoises, respectively, at 25°C. The viscosity of the TBP-mixtures decreases logarithmically as the temperature is increased. For a 30 volume per cent TBP-Shell Spray Base mixture, the viscosities are 32, 23.5, 19.5, and 18 millipoises, at 20°, 35°, 50°, and 60°C., respectively.[158]

The flash point of the solvent increases linearly as the concentration of TBP is increased, and may be estimated from the following equation:[113]

$$\Delta T = -T_o^2/2300\ \log_{10}M \ldots\ldots\ldots\ldots\ldots\ldots\ldots\ldots\ldots\ldots (5)$$

where T_o = flashpoint of pure diluent in degrees Kelvin at atmospheric pressure; and

M = mole fraction of diluent. (Calculation of M on the basis of an assumed diluent average molecular weight of 160 leads to approximately correct results with most commercial diluents of interest.)

[redacted]

It can be seen from Equation (5) above, that by increasing the TBP concentration in a kerosene-type diluent, the flash point is increased, due to the effect of TBP in reducing the vapor pressure of the kerosene.

For concentrations of TBP up to about 30 volume per cent, the TBP-diluent mixtures are assumed to behave as perfect solutions; i.e., the calculated flash points are in good agreement with the observed values.

The Tag closed-cup flash points of Shell E-2342 and Soltrol-170 diluents at atmospheric pressure are 166° and 183°F., respectively. The calculated values for 30 volume per cent TBP in these diluents are 176° and 195°F., respectively. The flash points of several alternative diluents are given in Table IV-2.

The vapor pressure of a TBP-diluent mixture depends both on the diluent used and the TBP concentration. The vapor pressures of TBP and of diluent are discussed separately above, under 1.3 and 2.3, respectively, and are plotted in Figure IV-3. The approximate vapor pressure of a TBP-diluent mixture at any desired temperature may be calculated by multiplying the vapor pressure of the pure diluent at the temperature in question by the mole fraction of diluent in the TBP-diluent mixture. An assumed average molecular weight of 160 is a good approximation for the purposes of this calculation for most commercial diluents of interest.

The dielectric constant of TBP-hydrocarbon diluent mixtures varies with the TBP concentration from 2 to 8 for 0 to 100 volume per cent TBP. For 30 volume per cent TBP in Shell Deodorized Spray Base diluent the dielectric constant is 3 as compared with approximately 80 for all Purex-process aqueous solutions.

3.2 Tributyl phosphate-diluent-$UO_2(NO_3)_2$-HNO_3 systems

Since the formula of the uranium-TBP complex ($UO_2(NO_3)_2.2TBP$), the molecular weight of TBP (266), and the specific gravity of TBP (0.973 at 25°C.) are known, it may be calculated that one liter of 30 volume per cent TBP in diluent (where TBP = 1.095 M) will complex 124 grams of uranium (0.52 M). At this point the solvent phase is considered 100 per cent saturated. The apparent discrepancy between the values for half the TBP concentration (0.547 M) and the actual uranium saturation value (0.52 M), is due to the volume change which occurs when the uranium transfers into the solvent.

The densities of solutions of uranyl nitrate and/or nitric acid in TBP-diluent mixtures are dependent on the exact density of the diluent as well as on the concentrations of the components and on the temperature. The 25°C. densities may be calculated from the following equation:(173)

$$d_{25} = d_s + (0.394 - 0.086\ d_s)\ (\underline{M}\ UO_2(NO_3)_2) + (0.063 - 0.046\ d_s)\ (\underline{M}\ HNO_3) \quad \ldots\ldots\ldots\ldots\ldots\ldots (6)$$

where d_{25} = density of solution at 25°C. in g./ml.;

d_s = density of TBP-diluent mixture at 25°C. in g./ml. (for method see calculation under 3.1, above); and

$\underline{M}$ = concentration in moles per liter.

An equation for use in calculating the density of TBP-diluent-$UO_2(NO_3)_2$-HNO_3 solutions, $d_{t°C.}$, at temperatures between 10 and 70°C. is:(186)

$$d_{t°C.} = d_c + (3.20 - 0.005t - 0.008\ TBP)\ 10^{-2}\ \underline{M}\ HNO_3 + (3.16 - 0.005t + 0.0045\ TBP)\ 10^{-1}\ \underline{M}\ U + 2.1 \times 10^{-3}\ TBP - 7.4 \times 10^{-4}\ t \quad \ldots\ldots (7)$$

where d_c = density of the diluent at t °C. in g./ml.;

t = temperature in °C.;

TBP = concentration of TBP in volume per cent; and

$\underline{M}$ = concentration in moles per liter.

Equation (7) can be simplified to give the following equation:

$$d_{t°C.} = d_s + 0.318\ \underline{M}\ UO_2(NO_3)2 + 0.028\ \underline{M}\ HNO_3 - 8 \times 10^{-4}\ (t-25) \quad \ldots\ldots (8)$$

where $d_{t°C.}$ = density of solution at temperature, t, in g./ml.;

d_s = density of TBP-diluent at 25°C. in g./ml.;

$\underline{M}$ = concentration in moles per liter; and

t = temperature in °C.

Approximate densities of TBP-diluent-$UO_2(NO_3)_2$-HNO_3 solutions at temperatures from 10 to 70°C. may be obtained from the nomograph presented as Figure IV-4.

The nomograph may be used for organic-phase solutions containing 0 to 0.6 $\underline{M}$ uranium and 0 to 1.2 $\underline{M}$ nitric acid, with 25°C. densities of solute-free TBP-diluent mixtures in 0.81 to 0.87-g./ml. range. These combinations result in organic-phase (solvent plus solutes) solutions with densities ranging from 0.79 to 1.0 g./ml.

The density of the solute-free solvent (TBP in diluent) at 25°C. can be obtained from a separate plot in Figure IV-4. The plot covers TBP concentrations from 20 to 45 volume per cent and 25°C. diluent densities of 0.76 to 0.81 g./ml.

The use of the nomograph is demonstrated by following the broken lines on Figure IV-4. To find the density of HAP (HW #3 Flowsheet), a line is drawn between the pure solvent density at 25°C. and the temperature of the HAP stream, 25°C. The intersection of this line with line R_1 gives a point from which another line is drawn to the HAP nitric acid concentration, 0.02 M. The intersection of this second line with line R_2 gives a second point, from which a third line is drawn to the HAP uranyl nitrate concentration, 0.357 M. The intersection of the third line with the density line gives the density of HAP at 25°C. The values obtained from the nomograph, Figure IV-4, are accurate to within approximately ±1 per cent.

The effects of temperature on the densities of all Purex solvent-phase solutions (HW #3 Flowsheet) are approximately the same over the temperature range of 20 to 80°C., with the temperature coefficient being about 0.0008 grams per milliliter per °C.

The viscosities of TBP-diluent mixtures containing uranyl nitrate and nitric acid increase linearly as the concentration of the uranium increases. The viscosity of 30 vol. per cent TBP increases approximately 33 millipoises per mole of uranyl nitrate added (as determined with Shell E-2342 diluent at 25°C.). Thus the viscosity of the HAP stream (HW #3 Flowsheet) with Soltrol-170 diluent is approximately 39 millipoises.

The effect of nitric acid on the viscosity of the organic phase is negligible.[113]

The solubility of TBP from TBP-kerosene diluent mixtures in aqueous solutions at 20°C. is plotted in Figure IV-5, which shows that as the volume per cent of TBP in kerosene diluent is decreased the solubility of TBP (in grams per liter) in the aqueous phase decreases. The effect of the presence of ionizable substances in the aqueous phase is shown by the curves for 0.1, 0.2, and 2.0 M UNH aqueous solutions, where the TBP solubility decreases as the UNH concentration is increased. The unusual effect of HNO_3 on the solubility of TBP is shown for any specific TBP-diluent mixture, e.g., 30 vol. per cent TBP in diluent by the curves for 0, 1, 7, and 11 M HNO_3.[46,81,122,188] For aqueous solutions containing from 0 to 1 M HNO_3, there is little or no effect on the TBP solubility (0.31 to 0.28 g./l. for 0 and 1 M HNO_3, respectively). As the acid concentration increases from 1 M to 7 M HNO_3, the TBP solubility decreases until a minimum of 0.09 g./l. is reached at 7 M HNO_3, and from this point it again increases rapidly to a maximum of 1.1 grams per liter at 15.9 M HNO_3.[46,231]

The influence of temperature on the solubility of TBP is shown in the table below.[17]

MUTUAL SOLUBILITIES OF TBP, HYDROCARBON DILUENT, AND WATER

Effect of Temperature

Temperature, °C.	Solubility, Grams/Liter: Water in 30 Vol.% TBP-70% Shell E-2342(a)	TBP in Water	TBP in 0.12 M HNO_3 0.2 M UNH	TBP in 0.04 M HNO_3 0.2 M UNH	Shell E-2342(a) in water
10	8.9	0.41	---	---	---
25	7.8	0.26	0.04	0.11	0.004
35	6.9	0.11	---	---	---
50	4.3	0.12	0.05	0.10	0.004
70	5.8	0.18	---	---	---
84	6.4	0.20	---	---	---

Note: (a) Solubilities for other commercial diluents should be very close to those determined for Shell E-2342.

It may be seen that the solubility of TBP in water, from a mixture of 30 volume per cent TBP in diluent, decreases from 0.41 g./l. at 10°C. to a minimum of 0.11 g./l. at 35°C. and then increases to 0.20 g./l. at 84°C. Similarly, the solubility of water in 30 volume per cent TBP in diluent mixture decreases from 8.9 g./l. at 10°C. to 4.3 g./l. at 50°C. and then increases to 6.4 g./l. at 84°C. The presence of ionizable solutes in the aqueous solutions reduces the solubility of TBP and also decreases the effect of temperature.

The specific heats of TBP, hydrocarbon diluent, and mixtures of TBP-diluent, and uranyl nitrate, at 25° and 61°C., are tabulated below.(179)

SPECIFIC HEATS OF TBP-HYDROCARBON-DILUENT-URANYL NITRATE SOLUTIONS

Composition, Volume Per Cent	Specific Heat, Cal./(G.) (°C.): 25°C.	61°C.
100% Amsco 123-15	0.48	---
100% TBP	0.41	---
30% TBP in Amsco	0.48	0.39
30% TBP in Amsco; 0.2 M UN	0.43	---
30% TBP in Amsco; 0.5 M UN	0.41	0.37

The dielectric constant of solvent-phase solutions of uranyl nitrate and nitric acid varies little with the solute concentrations: under the various conditions of Purex Chemical Flowsheet HW #3 it ranges from 3 to 5, as compared with approximately 80 for Purex aqueous streams.

4. Aqueous Uranium Nitrate Solutions

4.1 Introduction

The physical properties of the aqueous uranium solutions given in

this section are those of major importance to the operation and control of the process equipment.

Nitric acid is the only constituent (other than the uranium itself) present in aqueous uranium streams which has an appreciable effect on the properties. The plutonium contained in some uranium solutions is present there in such low concentrations that it does not significantly affect the properties. Likewise, the minor components, viz., fission products, sodium and iron salts, have no significant effect.

Uranium in the aqueous solutions of the Purex process is always present as uranyl nitrate hexahydrate (UNH). This compound is a bright yellow crystalline solid and imparts an intense yellow color to its solutions even in very low concentrations. The intensity of the color varies with concentration and can be used as an empirical means of estimating concentrations, an experienced observer being able to detect it at concentrations as low as 0.002 M in the absence of interfering substances.

In order to aid in converting uranium concentrations in aqueous streams from weight per cent uranyl nitrate (UN) or uranyl nitrate hexahydrate (UNH) to moles per liter (M), a conversion graph has been included as Figure IV-6. In view of the very small contribution which nitric acid makes toward the density of solutions of moderate uranyl nitrate concentrations (see Equation (10) under 4.3, below), the conversion curves of Figure IV-6 may be used for solutions containing up to 2 M HNO_3 with an error of only a few per cent. If the density of any system is known, the conversion of concentration units for any of the components may be obtained from the general equation:

$$\text{Weight per cent} = \text{Molarity} \times \frac{\text{Formula weight}}{10 \times \text{Density}} \quad \ldots\ldots\ldots (9)$$

where the density (in grams per milliliter) and molarity are determined at the same temperature.

4.2 Solubility

A saturated solution of uranyl nitrate at 25°C. represents about 72 per cent by weight of $UO_2(NO_3)_2.6H_2O$ or 2.6 moles per liter.[28] The presence of nitric acid markedly reduces the solubility of uranyl nitrate in water as shown by the temperature-solubility phase diagrams for the $UO_2(NO_3)_2$-HNO_3-H_2O systems given in Figure IV-7 for 0, 1, 2, 3, 6, and 10 molar nitric acid parameters.[65,78,81,91,110,118,196,200,226] A solution of 60 weight per cent nitric acid (13 M) saturated with respect to uranyl nitrate contains 23.5 per cent by weight or 0.72 moles per liter UN at 25°C. The saturation temperatures plotted on Figure IV-7 are, for practical purposes, considered as the freezing and melting points of the systems represented. The inflections in the 0.0 M HNO_3 curve are considered eutectic points for the solid phases as indicated.

4.3 Density

The densities of aqueous solutions of the system $UO_2(NO_3)_2$-HNO_3-H_2O at 25°C. are plotted in Figure IV-8, where uranyl nitrate is represented in moles per liter from 0 to 2.6 M (saturation amount of $UO_2(NO_3)_2$ at 25°C.) and nitric acid is included at 0, 1, 2, and 3 molar parameters. Densities of specific solutions at 25°C. can also be calculated for given compositions by means of the following equation:

$$d_{25°C.} = 1.0012 + 0.3177\ \underline{M}\ UO_2(NO_3)_2 + 0.03096\ \underline{M}\ HNO_3 \quad .....(10)$$

where $d_{25°C.}$ = density at 25°C. in g./ml.

This equation gives an accuracy of ±1 per cent up to a concentration of 5 M HNO_3. The effects of aqueous-soluble process materials, such as $NaNO_2$, $NaNO_3$, $Fe(NH_2SO_3)_2$, etc., on the density of aqueous uranyl nitrate solutions are very small at the concentrations in which they are present in the Purex-process streams and are therefore omitted from the equation.(94)

The density of an aqueous uranyl nitrate-nitric acid solution at 25°C. can be converted to the density at any other temperature by means of the following equation:(94)

$$d_t = 1.0125\ d_{25°C.} + 0.000145t - 0.00500t\ d_{25°C.} - 0.0036 \quad .... (11)$$

where t = temperature in °C.

The densities of uranyl nitrate solutions at their boiling points are plotted in Figure IV-9 with nitric acid concentrations from 0 to 12 molar and temperatures from 100° to 120°C. as parameters.(65,89)

4.4 Viscosity

The viscosities of aqueous uranium solutions in the Purex process at 25°C. can be calculated by means of the following equation:(94)

$$\log_{10}\eta = 0.9527 + 0.2426\ \underline{M}_U + 0.0100\ \underline{M}_U^2 + \left[0.0089 - 0.0023\ \underline{M}_U\right]\underline{M}_H \quad ..(12)$$

where η = viscosity in millipoises and $\underline{M}_U$ and $\underline{M}_H$ are the molarities of $UO_2(NO_3)_2$ and HNO_3, respectively.

Thus the viscosity of 1.35 M $UO_2(NO_3)_2$, 2.0 M HNO_3 (HA Column feed) at 25°C. is 20 millipoises. Other process materials such as ferrous sulfamate, $NaNO_3$, etc., have little effect on the viscosity of the Purex aqueous uranium streams because of the low concentrations in which they are present, and therefore are omitted from the above equations.(94)

Coefficients for use in Equation (12) for calculating viscosities of solutions containing various other solutes (aluminum nitrate, sodium nitrate, ferrous sulfamate, etc.) are given in HW-11276.

Approximate viscosities (at 25°C.) of all solvent-extraction process streams for Purex HW #3 Flowsheet conditions are tabulated on the Process Flow Diagrams in Chapter VI.

4.5 Hydrogen ion concentration, pH

The pH values of aqueous uranium solutions at 25°C. from -0.2 to +0.6 M HNO_3 are given at four levels of uranyl nitrate concentrations in Figure IV-10.(97) As shown, an increase in uranyl nitrate concentration at a particular nitric acid concentration causes a decrease in the pH, i.e., an increase in the hydrogen ion concentration of the solution. The presence of sodium nitrate has little effect on the pH of acid solutions of uranyl nitrate, but causes a lowering of pH by about 0.12 unit per mole of $NaNO_3$ in neutral or acid-deficient solutions of $UO_2(NO_3)_2$.

4.6 Boiling point

Boiling points for the system $UO_2(NO_3)_2$-HNO_3-H_2O are plotted on a phase diagram in Figure IV-11 as isotherms ranging from 101° to 188°C. The three components of the system are represented in weight per cent. These may be converted to molarity by using Figure IV-6. Figure IV-11 also includes four distillation lines which demonstrate the change in composition of the solutions as a function of concentration. As the temperature is increased, water is rapidly removed until the temperature reaches approximately 120°C., at which point water and nitric acid form the maximum-boiling azeotrope and 68 weight per cent nitric acid is distilled from the solution. At approximately 188°C., the decomposition temperature of $UO_2(NO_3)_2$,(118) all of the free HNO_3 has been removed from the solution leaving 92 weight per cent $UO_2(NO_3)_2$ and 8 weight per cent water of hydration. This composition corresponds to the compound $UO_2(NO_3)_2.2H_2O$. It will be noted that further distillation above 188°C. renders the solution acid deficient indicating that the uranyl nitrate is decomposing.(65,189) It should be pointed out, however, that in the presence of TBP the incipient denitration temperature of uranyl nitrate may be reduced to approximately 140°C.(118)

Boiling points of uranyl nitrate solutions, from 100° to 120°C., are also given in Figure IV-9 where the densities of the solutions are plotted at their boiling points.

The boiling point of 100 per cent UNH is 118.6 ±0.4°C. at 760 mm. of Hg absolute pressure. The boiling point of UNH increases directly with pressure in the ratio of 1°C./16 mm. Hg. This ratio applies for a pressure range of 680 to 830 mm. of Hg.(166)

4.7 Specific heat

The specific heats of uranyl nitrate solutions from 0 to 2.6 M are given in Figure IV-12.(29) The figure stops at 2.6 M (56 weight per cent) uranyl nitrate since this is the saturation temperature at 25°C., and beyond this concentration $UO_2(NO_3)_2.6H_2O$ begins to crystallize out of solution. The specific heat of solid $UO_2(NO_3)_2.6H_2O$ at 25°C. is 0.23 calorie/(gram)(°C.).

4.8 Refractive index

The refractive indices at 25°C. of uranyl nitrate solutions from 0 to 2.6 M are included in Figure IV-12.(65)

5. Aqueous Waste Solutions

5.1 General

The aqueous waste streams from the Purex solvent-extraction columns contain mainly nitric acid (HAW, IAW, 2AW, and 2DW streams) or sodium carbonate (IOW and 2OW). Although these solutions also contain small amounts of other process materials, viz., $Fe_2(SO_4)_3$, $NaNO_3$, $NaNO_2$, and Na_2SO_4 along with varying amounts of fission products, their physical properties resemble closely those of pure nitric acid or sodium carbonate solutions. However, after concentration of the acidic wastes (discussed in Chapter X) the minor solutes exert significant, though still only slight, effects.(3) Table IV-3 lists the compositions, densities, boiling points, and specific heats of concentrated acidic wastes (IWW and 2WW) at typical process conditions, along with those of coating (slug jacket removal) waste and neutralized wastes.(3,81,132,137,142,155)

5.2 Concentration of neutralized wastes

Significant concentration of neutralized wastes (e.g., in the underground storage tanks by the radioactive heat of the fission products as discussed in Chapter X) results in precipitation of solids. An example of the effect of concentration on the boiling point and the amount of solids precipitated is shown in the table below:(137)

CONCENTRATION OF NEUTRALIZED WASTE

(Combined coating and neutralized wastes, HW #1 Flowsheet conditions.(132) Initial composition as shown in Table IV-3.)

Waste Volume, % of Initial	Precipitated Solids, Volume Per Cent	Boiling Point, °C.
100	0	108
75	3	111
50	7	115
47.5	9	117
45.5	13	118
41.5	35	119
40	45	121
30	85	130
20	98	155

6. Aqueous Plutonium Nitrate Solutions

6.1 Introduction

The physical properties of aqueous plutonium solutions are of interest in the Purex process only at the final plutonium-product concentration step, since the plutonium concentration in other process solutions is too low to exert an appreciable influence on the physical properties of the system. The effect of process amounts of Pu in 2BP or PSC upon such properties as density, freezing point, and viscosity is slight. On the other hand, the chemical behavior of plutonium in solution is of fundamental importance throughout the entire process. Both types of data are included in this subsection.

6.2 Physical properties

6.21 Solubility

The nitrates of plutonium are very soluble in water. However, saturated plutonium nitrate solutions require the presence of 1 to 5 moles of nitric acid per liter to prevent hydrolysis and subsequent polymerization or precipitation of the hydroxide. The plutonium (IV) polymer is discussed under 6.36, below.

The solubility of Pu(IV) nitrate is in the range of 2.1 to 2.5 moles per liter at 25°C., in the presence of approximately 1.8 M nitric acid.(67,68) The approximate solubility of Pu(VI) nitrate is 2.1 moles per liter at 25°C.(66,67)

6.22 Density

The densities of aqueous Pu(IV) nitrate-nitric acid solutions at 25°C. can be calculated by means of the following equation:(64,68)

$$d_{25^\circ C.} = 1.0012 + 0.22\ \underline{M}\ Pu(NO_3)_4 + 0.03096\ \underline{M}\ HNO_3 \quad .....(13)$$

where $d_{25^\circ C.}$ = density at 25°C. in g./ml.

6.3 Chemical properties

6.31 General

Although the Purex process makes use of only the Pu(III) and Pu (IV) oxidation states in the plutonium separation steps, all of the plutonium valence states possible in aqueous solutions are encountered: Pu(III), blue-violet in color; Pu(IV), green (the polymeric form of Pu(IV) stable at pH's above 1.0 to 1.3 is brown); Pu(V), colorless; and Pu(VI), pink-orange. The ionic species present in a non-complexing medium are Pu^{+3}, Pu^{+4}, PuO_2^{+}, and PuO_2^{+2}, all highly hydrated.(75) Pu^{+4} and PuO_2^{+2} are complexed by nitrate ion. In 2 M nitric acid the equilibrium constant for the reaction $Pu^{+4} + NO_3^{-} \rightleftharpoons Pu(NO_3)^{+3}$ is

approximately 2.9.[74] Nitrate ion, therefore, is an effective salting agent for Pu(IV), since it is probable that Pu(IV) is extracted as the nitrate complex or the neutral molecule. The equilibrium constant for the reaction $PuO_2^{+2} + NO_3^- \rightleftharpoons PuO_2NO_3^+$ is about 0.19 at 8 M nitrate ion concentration.[172]

Pu(IV) is highly susceptible to complex formation with sulfate ion, the equilibrium constant for the reaction $Pu^{+4} + HSO_4^- \rightleftharpoons PuSO_4^{+2} + H^+$ being approximately 500 at 2.3 M H_2SO_4 acid concentration.[74] The distribution of this sulfate complex in the 2A Column in the absence of high concentrations of HNO_3 would normally favor the aqueous phase, increasing Pu waste losses in the 2AW. However, the high nitric acid content in the 2A Column, as well as the fact that process amounts of ferric ion preferentially complex the sulfate, minimize the difficulty.[57]

6.32 Oxidation - reduction

The formal oxidation potentials of the Pu series, defined as the potentials at which the concentration of oxidized and reduced species are equal, are given below:[66,75]

Reaction No.	Couple (Pu Valences)	Reaction	Oxidation Potential,[a] Volts
1	V-VI	$PuO_2^+ \rightarrow PuO_2^{+2} + e^-$	-0.91
2	III-IV	$Pu^{+3} \rightarrow Pu^{+4} + e^-$	-0.92
3	III-VI	$Pu^{+3} + 2H_2O \rightarrow PuO_2^{+2} + 4H^+ + 3\ e^-$	-1.04
4	IV-VI	$Pu^{+4} + 2H_2O \rightarrow PuO_2^{+2} + 4H^+ + 2\ e^-$	-1.10
5	III-V	$Pu^{+3} + 2H_2O \rightarrow PuO_2^+ + 4H^+ + 2\ e^-$	-1.10
6	IV-V	$Pu^{+4} + H_2O \rightarrow PuO_2^+ + 2H^+ + e^-$	-1.29

Note: (a) Referred to the $H_2 \rightarrow 2H^+$ couple as zero at 25° to 30°C. in 1 M HNO_3.

Writing the equations with the number of electrons involved on the right, the sign convention is used whereby the oxidized form of any couple will oxidize the reduced form of any couple of algebraically greater potential. Conversely, the reduced form of any couple will reduce the oxidized form of any couple of lower oxidation potential.

Comparing the above Pu couples with the ferrous-ferric oxidation potential,

$$Fe^{+2} \rightarrow Fe^{+3} + e^-,\ E^\circ = -0.771,$$

it is seen that ferrous ion (added in the Purex process in the form of ferrous sulfamate) is capable of reducing the oxidized form of any of the Pu couples

listed, i.e., of converting Pu in any other valence state to Pu(III). The reduction of Pu(IV) to Pu(III) by ferrous ion is nearly quantitative in 3 to 5 minutes at 25°C. and is nearly independent of acidity and uranium concentration.

The sulfamic acid formed from the ionization of ferrous sulfamate functions as a holding reductant; i.e., it prevents the oxidation of Fe^{+2} to Fe^{+3} by nitric acid or air.

The oxidation potential for the hydroxylamine-nitrous oxide couple,

$$2NH_2OH + 4OH^- \rightarrow N_2O + 5H_2O + 4e^-, \; E^o = +1.05,$$

shows that hydroxylamine could be used as a plutonium reductant in place of ferrous ion. However, the reaction rate for the reduction of Pu(IV) by hydroxylamine rapidly decreases as the concentration of nitric acid is increased. The reduction is essentially complete in 1 minute in the presence of 0.66 M HNO_3, but requires 10 min. for 80% completion at 1.0 M HNO_3.(83)

Comparison of the potential of the nitric oxide-nitrous acid couple,

$$NO + H_2O \rightarrow HNO_2 + H^+ + e^-, \; E^o \approx -0.99,$$

with those of the reactions in the above table shows that HNO_2 (or a metal nitrite in acidic solution) will oxidize Pu(III) and Pu(V) to Pu(IV) and Pu(VI), respectively, and also reduce Pu(V) and Pu(VI) to Pu(IV) and Pu(III). Thus the net effect of the HNO_2 is to oxidize Pu(III) and reduce Pu(VI) to Pu(IV). Gaseous nitrogen dioxide, N_2O_4, in the presence of water forms HNO_2 and HNO_3 and is therefore a possible alternate oxidant for the cross-over oxidation of Pu(III) to Pu(IV).(220)

The rate of oxidation of Pu(III) to Pu(IV) by HNO_2 is highly dependent upon the conditions of the system. For Purex HW #3 Flowsheet conditions (6 M HNO_3, 0.1 M $NaNO_2$, 0.01 M Fe^{+2}, etc.) it has been shown that over 99 per cent of the Pu(III) in IBP is oxidized within 2 to 3 minutes at 25°C.(129) However, other investigators have found that under similar conditions with respect to Pu(III) and Fe(II), but dilute (0.5 M) HNO_3, 30 minutes are required to obtain 99 per cent oxidation.(73)

Pu(III) is also oxidized to Pu(IV) by nitrate ion. The rate of the reaction for Purex conditions is not known, but it is believed to be much slower than the rate of oxidation by nitrite ion. In the presence of 16 M HNO_3 the reaction goes to completion in a few seconds.(75)

6.33 Disproportionation

The most important disproportionation mechanism of Pu is the following:

$$2Pu^{+4} + 2H_2O \rightleftharpoons Pu^{+3} + PuO_2^+ + 4H^+ \quad \ldots\ldots\ldots\ldots\ldots\ldots (14)$$

This slow disproportionation followed by the more rapid reaction

$$PuO_2^+ + Pu^{+4} \rightleftharpoons PuO_2^{+2} + Pu^{+3} \quad \ldots\ldots\ldots\ldots\ldots\ldots (15)$$

is the mechanism for the oxidation of Pu(IV) to Pu(VI) at macro concentrations of plutonium, the role of the oxidizing agent being to convert the Pu(III) formed to Pu(IV).

In the reduction of Pu(VI) to Pu(III) the above disproportionation mechanism is reversed:

$$PuO_2^{+} + Pu^{+3} + 4H^{+} \rightleftharpoons 2Pu^{+4} + 2H_2O \quad \ldots\ldots\ldots\ldots\ldots\ldots \quad (16)$$

the role of the reducing agent being to reduce PuO_2^{+2} to PuO_2^{+} and Pu^{+4} to Pu^{+3}.

Due to the small differences in magnitude of the oxidation potentials of Pu listed under 6.32, above, and to the rapid equilibrium of the electron transfer in Equation (15), it is possible for all Pu species to co-exist in aqueous solutions; e.g., a solution of pure Pu(IV) salt in 0.5 M HCl contains, at equilibrium at 25°C., 27.2, 58.4, 0.8, and 13.6 per cent of plutonium (III), (IV), (V), and (VI), respectively.(75)

Under Purex-process conditions, however, any Pu(VI) formed by disproportion is reduced to Pu(IV) by HNO_2. This reduction is measurably slow at room temperature especially at high acid concentration but the presence of low concentrations of ferric ion (0.01 M Fe(III)) catalyzes the reaction so that the reduction is complete in a few minutes.(230)

6.34 Photoreduction and radiation stability

Photoreduction of Pu(VI) to Pu(IV) and Pu(IV) to Pu(III) takes place upon the adsorption of light from the blue regions of the visible spectrum. The extent and rate of the reduction are dependent upon light intensity, temperature, acidity, plutonium concentration, uranium concentration, and other chemical components in the system.(172) Although specific rates of reduction are not available for Purex conditions, it was found that under Redox conditions, in the presence of hexone, the reduction of Pu was very pronounced when the systems were exposed to light. It is postulated that the hexone decomposition products reduce uranium, which in turn causes the reduction of Pu.(172) Since organic impurities appear to initiate the reaction it is likely that photoreduction can occur in a Purex system. However, since the plant processing is accomplished in the absence of light, no difficulties from this phenomenon are expected.

Both oxidation and reduction of plutonium occur under its own alpha bombardment.(202) Pu(VI) and partly also Pu(IV) are reduced, while Pu(III) and partly Pu(IV) are oxidized. The amount of each oxidation state present in a system after equilibrium depends on the oxidation state of the major plutonium species present in the original solution. In determining the effect of alpha radiation on Pu(IV) and Pu(VI) solutions, measurements were reported in terms of the daily decrease in the average valence state of plutonium. It is known that acid concentration and temperature affect the rate of reduction. The decrease in the average valence state of plutonium under the influence of its

own alpha radiation ranged from 0.3 to 2 per cent per day in acidic (0.1 to 1.5 M) solutions.(75)

The effect of beta and gamma radiation on the stability of plutonium solutions is believed to be small. No apparent reduction of Pu(VI) was noted upon exposure of a solution for one hour to the beta and gamma radiation from dissolved fuel elements containing of the order of 2 per cent of the beta activity of Purex dissolver solution.(172)

6.35 Gas evolution

In macro concentration of plutonium, the intense alpha-particle bombardment, to which the water of the solution is subjected, causes some decomposition of the water into gaseous products.(93) The mechanism for the phenomenon probably involves the stripping of an electron from a water molecule by the alpha particle and a reaction of this positively charged water molecule with a neutral water molecule to form hydrogen peroxide and free hydrogen. The peroxide reacts with any oxidizible or reducible material present or decomposes, liberating oxygen.

The pressure developed on storage of plutonium solutions is a function of the free volume of the container. In a system of one-milliliter free volume and three milliliters of solution of 250 grams of Pu per liter, the pressure developed is calculated to be 20 atmospheres in 1 year and 700 atmospheres after about 37 years (at which time all of the water has been converted to hydrogen and oxygen). The corresponding pressures for 25 ml. of free space are 1.8 and 30 atmospheres, while for 1000 ml. of free space the pressures are 1.02 and 1.7 atmospheres. The above factors, high pressures and formation of explosive gas mixtures, necessitate the use of vented vessels for storage and handling of Pu solutions of high concentrations.(93)

6.36 Plutonium (IV) polymer

When the acidity of a Pu(IV) solution falls to about 0.01 molar, a polymeric species of Pu(IV) is formed in a matter of minutes.(72) This material is a polymeric hydroxide containing approximately four hydroxyl groups per plutonium atom.(71) At an acidity of approximately 0.1 molar, this polymer can be formed at elevated temperatures, but the reaction is slow(72) Between pH 2.5 and 3, precipitation of the polymer occurs.(71)

The Pu(IV) polymer is a positive colloid which is electrostatically adsorbed on substances, such as paper, sand, and glass, which assume negative surface charges when immersed in water.(74) The polymer is not extracted by TBP under Purex HW #3 Flowsheet conditions and its formation would lead to excessive Pu waste losses. The conversion of the colloid into the nitrate complex occurs slowly in 1 M HNO_3 (14% decreased to 8% in 17 days), the rate increasing with increasing acid concentration and decreasing if the polymeric solution has been previously heated. The half times for conversion with 6 and 10 M HNO_3 at room temperature are 3 and 1.9 hr., respectively. Depolymerization is very rapid at high temperatures in concentrated HNO_3 requiring 1 to 2 hr. for completion with boiling 6 M HNO_3.(72,74) The oxidation of the Pu(IV) polymer to Pu(VI) by dichromate is slow even at 80°C. (17% Pu(VI) formed in 4 hours).(172)

[redacted]

Polymeric Pu(IV) may be formed in dissolver solution or process streams which are allowed to become acid deficient. An ionic Pu(IV) solution, however, is stable for approximately 24 hours in a solution containing 1.92 M $UO_2(NO_3)_2$, 0.20 M acid deficient, contrasting with the observed very rapid polymerization in acid-deficient aluminum nitrate solutions.(88)

Under Purex HW #3 Flowsheet, all of the plutonium-containing aqueous process streams are at least 0.1 M HNO_3 so that the formation of the inextractable Pu(IV) polymer is not anticipated. In the organic process solutions, plutonium is complexed with TBP so that it is not available for polymer formation in the organic phase.

7. Reducing Agents

Ferrous ion, introduced in the form of ferrous sulfamate or ferrous ammonium sulfate, is employed in the Purex process as the agent for the reduction of plutonium to its trivalent state in the IB and 2D Columns. Sulfamate ion, $NH_2SO_3^-$, introduced as ferrous sulfamate, or as sulfamic acid in conjunction with ferrous ammonium sulfate, is employed in the role of a holding reductant to prevent the premature nitrite-catalyzed oxidation of Fe(II) to Fe(III) by nitrate ion, and hence reoxidation of Pu(III) to Pu(IV).

7.1 Ferrous sulfamate

7.11 Preparation

Ferrous sulfamate $Fe(SO_3NH_2)_2$ can be prepared on the Plant site from iron powder and an aqueous solution of sulfamic acid according to the following reaction:(51,96)

$$Fe^{+2} + 2HSO_3NH_2 \rightarrow Fe(SO_3NH_2)_2 + H_2 + 24{,}600 \text{ calories}$$

7.12 Physical properties

Formula	$Fe(SO_3NH_2)_2$
Molecular weight	248.03
Appearance	2.5 M solution is blue-green in color.(96)
Melting point	135°C.(61)
Solubility	The saturation concentration in water is approximately 3.6 to 3.8 M at 25°C.

The anhydrous salt is highly deliquescent and is believed to absorb 5 molecules of water of hydration.(12)

7.13 Reactions and stability

High pH contributes to the stability of sulfamate ion towards hydrolysis,

while low pH is necessary for the stability of ferrous ion towards air oxidation and consequent precipitation. The stability of ferrous sulfamate toward ferric precipitation is satisfactory upon maintaining the pH of solution at 2 or slightly less with a 2 to 3 per cent excess of sulfamic acid.(96) The over-all stability of a ferrous sulfamate solution maintained at a pH of 2 in a vessel containing an inert-gas blanket is limited by the rate of hydrolysis of sulfamate ion. This rate is approximately 0.1 per cent per day at 25°C., and increases to over 4 per cent per hour at 80°C. The total amount of sulfate ion in the solution due to hydrolysis will be the sum of that produced during the preparation of the ferrous sulfamate (approximately 1 per cent of the initial sulfamic acid) plus that produced on aging.

The reaction between sulfamate ion and nitrous acid, described under sulfamic acid under 7.2, below, is the reaction which prevents the oxidation of Fe(II) to Fe(III) through an autocatalytic mechanism involving nitrite ion.(170) In 5.0 M HNO_3, where oxidation of Fe(II) to Fe(III) is normally rapid, sulfamate ion maintains the half life of Fe(II) in the range of 30 to 50 hours.(105) The stability of Fe(II) with respect to sulfamate ion concentration and temperature is discussed under 7.3, below.

7.2 Sulfamic acid

7.21 Physical properties

Formula	HSO_3NH_2
Molecular weight	97.09
Appearance	White crystalline solid, non-volatile, non-hygroscopic, odorless(12)
Melting point	205°C. (decomposes at 209°C.)(12,61)
Heat of solution	-5800 cal./mole
Density	2.03 g./ml.

Solubility in water:(6)

Temperature, °C.	G. HSO_3NH_2/ 100 G. H_2O	Wt. % HSO_3NH_2
0	14.68	12.8
10	18.56	15.7
20	21.32	17.6
30	26.09	20.7
40	29.49	22.8
50	52.82	24.7
60	37.10	27.1
70	41.91	29.5
80	47.08	32.0

All ordinary salts of sulfamic acid are extremely soluble in water, being in most instances more soluble than the corresponding sulfate or nitrate.

7.22 Chemical properties

Sulfamic acid is considered a strong acid, being stronger than phosphoric acid, though weaker than nitric.(12) The pH's of 0.5 M aqueous solutions of H_3PO_4, HSO_3NH_2, and HNO_3 are 1.0, 0.63, and 0.30, respectively.(61) The pH of sulfamic acid as a function of concentration is given in the following table:

Concentrations of Sulfamic Acid, M	pH
1.0	0.41
0.75	0.50
0.50	0.63
0.25	0.87
0.10	1.18
0.05	1.41
0.01	2.02

Sulfamic acid hydrolyzes according to the following reaction:(12,170)

$$HSO_3NH_2 + HOH \rightleftharpoons NH_4^+ + H^+ + SO_4^=$$

The hydrolysis rate at 25°C. is slow, about 0.1 per cent per day for either a 1 M sulfamic acid solution in water or a 1 M sulfamic acid - 1 M nitric acid solution. A similar rate is found for a 1 M sulfamic acid - 1 M $Al(NO_3)_3$ - 0.3 M HNO_3 solution. The hydrolysis is a first-order reaction with rate constants at 80°C. of 4.56 and 8.25 per cent decomposed per hour for 1 and 10 per cent solutions, respectively.(6,87)

Sulfamate ion reacts rapidly and completely with nitrite ion to give nitrogen gas and sulfate ion according to the following reaction:(170)

$$HNO_2 + NH_2SO_3^- \rightleftharpoons N_2 + H_2O + H^+ + SO_4^=$$

Warm concentrated nitric acid reacts with sulfamic acid to produce N_2O gas and sulfuric acid.(87) Dichromate and permanganate solutions and ferric chloride do not attack sulfamic acid.(6,86,170)

7.3 Ferrous ammonium sulfate

7.31 Physical properties(28)

Formula	$FeSO_4.(NH_4)_2SO_4.6H_2O$
Molecular weight	392.15 (as the hexahydrate) 284.0 (as the anhydrous salt)
Melting point	Decomposes at approximately 100°C.
Appearance	Green crystals

Solubility in water:(28)

Temperature, °C.	Grams $FeSO_4 \cdot (NH_4)_2SO_4$ Per 100 Grams H_2O	$FeSO_4 \cdot (NH_4)_2SO_4$, Weight Per Cent
0	12.5	11.1
15	20.0	16.7
25	30.0	23.1
40	33.0	24.8
50	40.0	28.6
70	52.0	34.2

Density of aqueous solutions:(33)

$FeSO_4 \cdot (NH_4)_2SO_4$, Weight Per Cent	Density at 16.5°C., G./Ml.	Density at 25°C., G./Ml.
2	1.015	1.013
4	1.032	1.029
6	1.048	1.045
8	1.065	1.062
10	1.082	1.080
12	1.100	1.098
14	1.118	1.116
16	1.136	---
18	1.154	---

7.32 Stability

Ferrous ion is autocatalytically oxidized to ferric ion by nitric acid. The oxidation mechanism apparently involves nitrous acid, the destruction of which (e.g., by reaction with sulfamate ion) prevents the autocatalytic reaction.

In order to maintain a Fe(II)/Fe(III) ratio of greater than unity for 15 hours in a system containing ferrous ammonium sulfate, sulfamic acid, and nitric acid, the nitric acid concentration must be limited to 6 molar at 25°C. and to 4 molar at 50°C. The oxidation rate of Fe(II) is decreased by the addition of excess sulfamic acid, but not in direct proportion to the acid concentration. The half life of Fe(II) under various conditions is shown in the following table.(154)

STABILITY OF FERROUS ION IN AQUEOUS SOLUTIONS

Effects of Temperature and Acid Concentration

Solution Composition, Moles per Liter			Temperature, °C.	Fe(II) Half Life, Hours
HNO_3	HSO_3NH_2	$FeSO_4.(NH_4)_2SO_4$		
4	0.2	0.1	25	>130
4	0.2	0.1	48	7.1
4	0.2	0.1	70	0.5
6	0.2	0.1	25	23
6	0.2	0.1	50	1.1
8	0.2	0.1	25	4.3
8	0.2	0.1	50	0.3
8	0.3	0.1	25	8.2
8	0.4	0.1	25	11.0
10	0.1	0.1	25	<0.1
10	0.15	0.1	25	0.7

8. Surface and Interfacial Properties

8.1 Introduction

The process of liquid-liquid countercurrent extraction involves intimate contact between two essentially immiscible liquids, during which time the solute is transferred from one phase to the other across the phase boundary between the two systems. This desired contact is obtained in the Purex process by dispersing in one phase (which remains continuous) fine droplets of the other phase (which then becomes the discontinuous one). Owing to the specific-gravity differential between the phases, the dispersed droplets rise or fall through the oppositely flowing continuous phase. Interfacial tension in such a system, analogous to surface tension in distillation and absorption processes, influences the size of the droplets of the dispersed phase. Smaller droplets are more easily formed with systems of lower interfacial tension, the droplet diameter (when other factors are equal) being directly proportional to the interfacial tension. Small droplet diameters, in turn, mean high interfacial area, resulting in desirably high solute mass-transfer rates across the interface.

Too fine a dispersion, however, which may result in the formation of an excessively stable emulsion, is not desirable, owing to increased difficulties of phase separation which outweigh any advantages resulting from the increased interfacial area.(30)

The dispersion and disengaging characteristics of liquid-liquid systems, a function of interfacial tension, have important bearing on the behavior of the system in a pulse column, as discussed in Chapter V, though the exact relation between laboratory findings and column behavior is incompletely understood.

8.2 Surface tension(11)

The attraction between molecules of a liquid manifests itself near the surface where the molecules are subject to an unbalanced force. The molecules at the surface are pulled inward by the sub-surface molecules and the liquid thus tends to adjust itself to give minimum surface area. The force is usually expressed in dynes/cm. and is readily determined. The surface tension of a liquid is inversely proportional to the temperature, and is decreased by certain surface-active agents. Some typical surface tension data are given in the following table.(145)

Liquid	Temperature, °C.	Surface Tension, Dynes/Cm.
H_2O	25	71.8
0.7 M HNO_3	20	72.0
1.5 M HNO_3	20	71.6
2.8 M HNO_3	20	70.9
8.5 M HNO_3	20	68.3
TBP	25	25.8
Amsco 123-15	25	31.9
Kerosene	20	28.0
12.5 vol. % TBP in Shell Deodorized Spray Base	25	26.6

8.3 Interfacial tension

The same forces are involved in interfacial tension that are found in surface tension. However, when two partially miscible liquids are placed in contact, each dissolves to some extent in the other and may cause marked changes in surface tension. The interfacial tension may be defined as the force required to increase the area of the interface by 1 sq. cm. Figure IV-13 presents plots of interfacial tension between organic and various aqueous solutions against TBP concentration in a hydrocarbon diluent. It may be noted by reference to Figure IV-13 that the presence of either nitric acid or uranyl nitrate increases interfacial tension. TBP has moderate surface-active properties as may be seen from the rapid drop in interfacial tension as TBP is added to diluent.

The table below lists the interfacial tension for a number of Purex-type systems at 24°C. at equilibrium.(25,144)

ORGANIC-AQUEOUS INTERFACIAL TENSIONS

Initial Phase Compositions		Interfacial Tension,
Organic	Aqueous	Dynes/Cm.
Drum TBP	H_2O	8.46
30% TBP in Amsco 123-15	H_2O	11.65
30% TBP in Ultrasene	H_2O	11.01
30% TBP in Amsco 125-90W	H_2O	10.6
7% TBP in Ultrasene	H_2O	16.29
Drum Ultrasene	H_2O	44.85
Amsco 125-90W	H_2O	44.0
30% TBP in Ultrasene	H_2O	11.0
30% TBP in Ultrasene	0.148 M HNO_3	10.78
30% TBP in Ultrasene	1.67 M HNO_3	10.85
30% TBP in Amsco 125-90W	5.0 M HNO_3	12.1
30% TBP in Ultrasene, 8.65 g./l. U (IA extn.)	1.90 M HNO_3, 0.55 g./l. U	11.29
30% TBP in Ultrasene, 76.5 g./l. U (IA scrub)	2.03 M HNO_3, 16.5 g./l. U	15.08
30% TBP in Ultrasene plus 0.05% DBP	H_2O	10.83
30% TBP in Ultrasene	0.1 M NaOH	11.0

8.4 Contact angles

The surface-wetting characteristics of column internals are important both to the design and operation of the columns. Measurement of the angle formed at the liquid-solid-liquid or liquid-solid-air boundaries when the liquid and solid surfaces are brought into contact in the presence of air or another (immiscible) liquid provides indication of these characteristics.

When the liquid completely wets the solid surface, i.e., a drop spreads to form a film of uniform thickness, the contact angle is said to be 0°. When no wetting occurs, i.e., a drop of liquid forms a perfect sphere with only a single point of contact, the contact angle is 180°. Intermediate angles reflect intermediate degrees of wetting.

While exact contact-angle measurements for Purex systems are not available, the order of aqueous-phase and organic-phase contact angles for clean stainless steel and three types of plastic surfaces are generally as follows: (9,10,18,34,127)

Surface	Contact Angle	
	Aqueous	Organic
Stainless steel[a]	Lowest (i.e., most wetted)	High
Polythene[b]	2nd lowest	Lowest of 3 plastics
Fluorothene[b]	2nd highest	Between polythene and teflon
Teflon[b]	Highest (i.e., least wetted)	Highest of 3 plastics

Notes: (a) Preferentially wetted by aqueous phase.

(b) Preferentially wetted by organic phase.

8.5 Dispersion and disengaging times

Effective extraction performance of a pulse column is dependent on the formation of a more-or-less fine phase dispersion to provide a large interphase contact area. It is an additional requirement that the dispersion formed in the column should be capable of disengaging fairly readily. Empirical tests of dispersion and disengaging times by the vibrational method may usually be qualitatively correlated with pulse-column behavior, though the present state of development of the tests does not permit quantitative correlation. As discussed in Chapter XVIII, the method involves agitation with reciprocating sieve plates. The use of stainless-steel sieve plates results in dispersion of the organic phase in the aqueous one, while the aqueous phase becomes dispersed if fluorothene plates are used.

Typical dispersion and disengaging times for Purex-process systems are presented in Table IV-4.

Dispersion times vary with TBP concentration, usually going through a maximum near 10 volume per cent TBP, and decreasing with increasing TBP concentration above 10%.(145)

Dispersion times for organic-in-aqueous phase dispersions are known to be substantially shortened by gross mass transfer of uranium or of nitric acid from the aqueous to the organic phase. This effect varies with the TBP concentration, being more pronounced in the 10-to-15 volume per cent TBP range than at higher or lower TBP concentrations.

Dispersion time generally decreases with an increase in temperature. The effect of temperature is usually more pronounced in uranium-bearing systems than in uranium-free ones.

The disengaging time varies little with the concentration of TBP in the 5-to-30 volume per cent range. A rise in temperature generally slightly lowers the disengaging time.

DBP, MBP, and other surface-active agents may greatly increase disengaging times.

9. Heats of Extraction and Stripping

The extraction of uranyl nitrate from an aqueous to an organic phase results in the liberation of heat ($-\Delta H$), while the stripping of UN from the organic to an aqueous phase results in the absorption of heat ($+\Delta H$). The opposite is true of nitric acid. Some values for the heats of extraction of uranyl nitrate and nitric acid and heats of stripping of uranyl nitrate under various conditions are tabulated below.[43,133,219]

HEATS OF EXTRACTION OF URANYL NITRATE AND NITRIC ACID

Direction of mass transfer: aqueous to organic phase. Organic phase before equilibration: 30 vol. % TBP in hydrocarbon diluent. 0.416 M $UO_2(NO_3)_2$ in aqueous phase before contacting.

HNO_3 Conc. in Aq. Phase Before Contacting, M	ΔH[a], Kilocalories/Gram Mole of Transferring Solute	
	$UO_2(NO_3)_2$	HNO_3
2.0	-2.4	+1.8
3.0	-4.2	+1.2
4.0	-6.6	+0.7

Note: (a) Negative ΔH represents liberation of heat to surroundings; positive ΔH, absorption of heat. Tabulated ΔH's are average for 25° to 75°C.

HEAT OF STRIPPING OF URANYL NITRATE

Direction of mass transfer: Organic to aqueous phase.
Aqueous phase before contacting: water.
Organic phase: 30 vol. % TBP in hydrocarbon diluent.

Organic-Phase Solute Concentrations Before Contacting		ΔH, Heat Absorbed in Stripping,[a] Kcal./G.Mole
M $UO_2(NO_3)_2$	M HNO_3	
0.314	0.08	+6.1
0.210	0.05	+5.2
0.021	0.005	+6.0

Note: (a) Average values for 0 to 60°C.

The interphase transfer of plutonium (IV), gross beta-active fission products, ruthenium, zirconium, and niobium is accompanied, under Purex conditions, by heat effects in the same direction as for nitric acid. However, uranium and nitric acid are the only solutes present in Purex streams in sufficiently high concentrations to cause significant temperature changes in the pulse columns. Even these effects are slight, the over-all temperature rise in the HA Column and the temperature reduction in the HC Column being approximately 1°C.

C. SOLVENT-AQUEOUS PHASE EQUILIBRIA

The bases of the Purex process are the extractability of uranyl nitrate and plutonium nitrate and the relative inextractability of fission products from a nitric acid-containing aqueous phase by a TBP-containing organic phase. Data given in this section relative to the concentrations of solutes present in the two phases at equilibrium are presented largely in the form of distribution ratios, E_a^o, defined by the relationship:

$$E_a^o = \frac{\text{Weight of solute per unit volume in organic phase}}{\text{Weight of solute per unit volume in aqueous phase}}$$

For consistency, the distribution ratios (or distribution coefficients) presented in this section are invariably organic/aqueous concentration ratios, E_a^o, as defined above. The aqueous/organic distribution ratio, E_o^a, used occasionally elsewhere, is the reciprocal of E_a^o.

Distribution ratios presented in this chapter, when not otherwise designated, apply at approximately 25°C.

Equilibrium diagrams for specific columns are included in Chapter V.

1. Uranium

1.01 Introduction

In this subsection, quantitative data are presented which show the effects of process variables on the equilibrium distribution of uranium. The basic principles of the extraction of uranium in the Purex process and a discussion of the complexing of uranium by TBP are given in Section A. Although the equilibrium constant based on the equation for the formation of the TBP-uranium complex provides a qualitative picture of the effect of process variables on the extraction, uncertainties about activity coefficients and the presence of other complexes limit its general applicability. The over-all reaction and the associated equilibrium constant are represented by the following equations:

$$UO_2^{++}\ (Aq.) + 2NO_3^-\ (Aq.) + 2\,TBP\ (Org.) \rightleftharpoons UO_2(NO_3)_2.2\,TBP\ (Org.) \quad ..(1)$$

and:

$$K_U = \frac{[UO_2\ (NO_3)_2.2TBP]\ (Org.)}{[UO_2^{++}](Aq.)\ [NO_3^-]^2(Aq.)\ [TBP]^2(Org.)} \quad .....(2)$$

where the brackets indicate activities. If activities are identified with concentrations, the above equilibrium expression may be given as:

$$K_U' = \frac{E_U{}_a^o}{(NO_3^-)^2(Aq.)\ (TBP)^2(Org.)} \quad \ldots\ldots\ldots\ldots\ldots\ldots\ldots (3)$$

where E_{Ua}^o = uranium distribution coefficient = $\frac{(UO_2\ (NO_3)_2 . 2TBP)}{(UO_2^{++})}$;

(TBP) = concentration of uncomplexed TBP in moles per liter; and

(NO_3^-) = concentration of uncomplexed NO_3^- in moles per liter.

Neglecting volume changes in the solvent and the reduction of the free TBP concentration which results from nitric acid complexing, the constant becomes:

$$K_U' = \frac{E_U{}_a^o}{(NO_3^-)^2(Aq.)\ (TBP_o - 2U_o)^2(Org.)} \quad \ldots\ldots\ldots\ldots\ldots\ldots (4)$$

where TBP_o = total concentration of TBP in the solvent expressed in moles per liter;

U_o = the molar concentration of uranium in the organic phase;

$(TBP_o - 2U_o)$ = an approximate expression for the free, uncomplexed TBP; and

(NO_3^-) = the molar concentration of nitrate in the aqueous phase at equilibrium.

Although the "constant" varies appreciably with changes in conditions, it affords a qualitative interpretation of the data which follow.

1.02 Effect of uranium concentration

A change in the concentration of uranyl nitrate may either increase or decrease the uranium distribution ratio as shown in Figure IV-14 and IV-15. At low uranium and nitric acid concentrations an increase in uranyl nitrate concentration results in a corresponding increase in the uranium distribution ratio. In concentrated nitric acid or uranyl nitrate solutions the distribution ratio (E_a^o) decreases with increasing uranyl nitrate concentration. (On the basis of Equation (3), above, a decrease of E_a^o with increasing uranium concentration results whenever the percentage increase in nitrate ion concentration as a result of adding uranyl nitrate is less than the percentage reduction of the free TBP concentration.)

The concentration of uranium in the organic phase is plotted as a function of the aqueous-phase uranium concentration in the X-Y equilibrium diagrams in Figures IV-18 and IV-19.

At high uranium concentrations, the organic uranium concentration approaches a saturation limit which corresponds to approximately two molecules of TBP per molecule of uranyl nitrate as indicated by Equation (1), above. The concentration of TBP in the solvent (30 volume per cent TBP in hydrocarbon diluent) is 1.095 M. Because of the volume increase as uranium is added to the solvent, the theoretical saturation value for uranium is 0.52 M rather than 0.547 M.(51,106,175,180)

1.03 Effect of nitric acid concentration

In the Purex process, nitric acid is the source of nitrate ions for salting uranium and plutonium into the organic phase. As may be seen in Figure IV-14, an increase in aqueous-phase nitric acid concentration (up to about 5 M) increases the uranium distribution ratio, particularly for dilute uranium solutions, as would be expected on the basis of the equilibrium expression given in Equation (3), above. At acidities above approximately 5 M HNO_3, however, an increase in acid concentration is accompanied by a decrease in the uranium distribution ratio because of reduction in the concentration of free TBP due to its complex formation with nitric acid.(175,178, 180)

The effect of nitric acid concentration on uranium distribution is also shown in the equilibrium diagrams in Figures IV-18 and IV-19.

1.04 Effect of TBP concentration

The effect of TBP concentration in the solvent is indicated by Figure IV-16, in which uranium distribution ratios, E_a^o, for several representative aqueous compositions are plotted against the TBP concentration. The slope of the lines varies with the composition of the equilibrated solutions. For moderately dilute uranium solutions (0.1 M) containing no nitric acid, the uranium distribution ratio varies as the square of the TBP concentration. For very dilute uranium solutions (0.005 M) containing no nitric acid, the value of E_a^o varies as the 2.5 power of the TBP concentration (not shown on graph). The uranium distribution ratio for dilute uranium solutions containing more than 0.5 M nitric acid varies approximately as the 1.1 power of the TBP concentration. It is of interest to note that this ratio is maintained over a fairly wide range (0.5 to 3.0 M) of nitric acid concentrations.(51,169,190)

As the uranium concentration increases, approaching saturation of the TBP, uranium E_a^o values tend to increase in proportion to the 1.0 power of the TBP concentration.

1.05 Effect of diluent

The uranium distribution coefficient is essentially independent of the type of hydrocarbon diluent used.(101)

1.06 Effect of temperature

The uranium distribution coefficient, E_a^o, is decreased by an increase in temperature as shown by Figure IV-17, in which the uranium distribution ratio is plotted against temperature for several aqueous compositions. The effect of temperature is greatest at low uranium concentrations and is quite small at high uranium concentrations, tending to disappear as saturation is approached. The slope of the uranium distribution ratio-vs.-temperature curve appears, from the partial data plotted in Figure IV-17, not to be greatly affected by the nitric acid concentration.

1.07 Effect of metal nitrates

The salting strengths of sodium nitrate, calcium nitrate, and aluminum nitrate are approximately the same if compared on an equivalent nitrate ion basis. They are approximately the same as the salting strength of nitric acid at low nitrate concentrations, but they are more effective at the higher concentrations (above about 0.5 N NO_3^-). Their effectiveness as salting agents is also dependent upon the uranium concentration, as shown below, for 30% TBP by volume.[128,175]

% U Saturation of Solvent	Aqueous-Phase NO_3^- Normality	Uranium Distribution Ratio, (G./L. Org.)/(G./L. Aq.)	
		HNO_3 as Salting Agent	$Al(NO_3)_3$ as Salting Agent
8	0	0.5	0.5
	0.5	2.5	2.5
	1.0	6	18
	1.5	10	ca. 100
38	1.5	6	10
76	0	0.8	0.8
	0.5	1.2	1.3
	1.0	1.6	2.3
	1.5	2.0	4

1.08 Effect of butyl acid phosphates

Small amounts of monobutyl phosphate (MBP) and dibutyl phosphate (DBP) are present in the solvent as a result of TBP hydrolysis.

The uranium in the DBP-uranium complex is held very tightly. The molar equilibrium constant, K_U, for the reaction is 2.7×10^4, as determined with 10 to 25 g./l. DBP in Amsco 125-90W, equilibrated with aqueous solutions which, before contacting, were 3 M in HNO_3, 0.01 M in $UO_2(NO_3)_2$. The complexing reaction and the definition of the equilibrium constant are as follows:

$$UO_2^{++} + 2H(C_4H_9)_2PO_4 \rightleftharpoons UO_2\left[(C_4H_9)_2PO_4\right]_2 + 2H^+ \quad \text{.....(5)}$$

$$K_U = \frac{UO_2\left[(C_4H_9)_2PO_4\right]_2\left[H^+\right]^2}{\left[UO_2^{++}\right]\left[H(C_4H_9)_2PO_4\right]^2} = 2.7 \times 10^4 \quad \text{.....(6)}$$

Equation (6) indicates that in the presence of a stoichiometric excess of uranium DBP should practically quantitatively react with the uranium to form the "unstrippable" uranium complex.

The compound $UO_2[(C_4H_9)_2PO_4]_2$, formed by the reaction of DBP and uranium, distributes to the organic phase. The effect of DBP upon the uranium distribution ratio is shown in the following table.(165)

U DISTRIBUTION IN PRESENCE OF DBP

20 vol. per cent TBP

Aqueous-Phase Concentrations, G./L.		U Distribution Ratio at Indicated Org.-Phase DBP Concentration, (G./L. Org.)/(G./L. Aq.)				
U	HNO_3	DBP Absent	0.02 G./L. DBP	0.1 G./L. DBP	1 G./L. DBP	10 G./L. DBP
0.006	0	0.004		1		100
0.6	0.03	0.005	0.02	0.1	8	400
3	0.15	0.02	0.02	0.05	50	700
12	0.6	0.20	0.20	0.20	0.24	5
60	3	0.60	0.60	0.60		1.0

The compound $UO_2(C_4H_9)PO_4$, formed by the reaction of MBP and uranyl nitrate, favors the aqueous phase. Calculations from solubility data(119) indicate the following distribution ratios for dilute solutions of the compound:

DISTRIBUTION OF U-MBP COMPOUND

15 vol. per cent TBP

M HNO_3 in Aq. Phase	Calculated Distribution Ratio, (G./L. Org.)/(G./L. Aq.)
0	1
1	0.03

1.09 Effect of aqueous-phase complexing agents

Ions such as sulfate, phosphate, and oxalate, which react with the uranyl ion to form stable complexes in the aqueous phase, significantly decrease the extraction of uranyl nitrate by TBP.

The following table illustrates the effect of phosphate in lowering the uranium distribution ratio:(144)

EFFECT OF PHOSPHATE ON URANIUM DISTRIBUTION

30 vol. per cent TBP.
33% U saturation of solvent.
2.6 M HNO_3 in aqueous phase.

M H_3PO_4 in Aq. Phase	U Distribution Ratio (G./L. Org.)/(G./L. Aq.)
0	15
0.025	12.5
0.061	8.5
0.125	6.2

Data determined for the Uranium Recovery (TBP) process indicate that one mole of sulfate lowers the uranium distribution ratio by approximately as much as 1/3 mole of phosphate.

1.10 Equilibrium diagrams

Equilibrium diagrams for the distribution of uranium between aqueous nitric acid solutions and a 30 volume per cent TBP organic phase for the entire range of uranium and HNO_3 concentrations encountered in the Purex process are presented in Figures IV-18 and IV-19. The equilibrium curves for specific Purex columns are given in Chapter V, together with typical operating lines.

2. Plutonium

2.1 Introduction

The separation of plutonium from fission products and from uranium is based on the relative extractability of Pu(IV) and inextractability of Pu(III) by TBP. Equations for the formation of the most probable plutonium-TBP complexes are as follows:

$$Pu(NO_3)_3 + 3TBP = Pu(NO_3)_3.3TBP \quad \ldots\ldots\ldots\ldots\ldots\ldots \quad (7)$$

$$Pu(NO_3)_4 + 2TBP = Pu(NO_3)_4.2TBP \quad \ldots\ldots\ldots\ldots\ldots\ldots \quad (8)$$

$$PuO_2(NO_3)_2 + 2TBP = PuO_2(NO_3)_2.2TBP \quad \ldots\ldots\ldots\ldots\ldots\ldots \quad (9)$$

The equation given for Pu(III) is not well established because the complex is weak and the distribution ratio is too low for accurate measurement. In general, one complex predominates for each valence state although small amounts of other forms may be present at extreme conditions. Equilibrium constants based on the preceding equations have been determined and provide a correlation of the data. These constants have not been used to predict distribution ratios under different conditions, however, because small errors in values assigned to activity coefficients are magnified through elevation to high powers and may lead to large errors in the calculated distributions. Expressions for the equilibria between TBP and plutonium should include consideration of the nitrate complexing of plutonium in the aqueous phase, which is particularly important in the case of Pu(IV), but is also appreciable for Pu(III) and Pu(VI).[27,42,192,229]

2.2 Effect of oxidation state

The high distribution ratio, E_a^o, of Pu(IV) in HNO_3 - "salted" systems forms the basis for the separation of plutonium from fission products, which in general are not appreciably extracted by TBP. As shown in Figure IV-20, the organic-to-aqueous distribution ratio of Pu(IV), between aqueous nitric acid solutions and 30% TBP, ranges from approximately 0.03 at 0.1 M HNO_3 through 3 at 1 M HNO_3 to 30 at 5 M. The distribution ratio of Pu(VI) is also high in "salted" systems, although, as shown in Figure IV-21, generally lower than that of Pu(IV) under similar process conditions, the Pu(VI) E_a^o being about 0.04 at 0.1 M HNO_3, 1 at 1 M, and 5 at 5 M. In the absence of uranium, Pu(III) distribution ratios are of the order of 100 times lower than those for Pu(IV) and Pu(VI).

Pu(III) and Pu(IV) distribution ratios in the presence of uranium are compared in Figure IV-21. Under the conditions of that figure, Pu(III) organic-to-aqueous-phase distribution ratios are of the order of 10 times lower than those of Pu(IV). The low distribution coefficient of Pu(III) allows plutonium to be stripped from the uranium-containing organic phase in the IB Extraction Column, and forms the basis of the separation of plutonium from uranium.(42,140,175) Under HW #3 Flowsheet IB Extraction Column conditions, the Pu(III) distribution ratio, E_a^o, is approximately 0.02 or lower. (The exact value is in doubt.)

2.3 Effect of uranium concentration

Since uranium forms a stronger complex with TBP than does plutonium, uranium, as its aqueous-phase concentration increases, tends to replace the plutonium in the organic phase. This tendency manifests itself in a reduction of the plutonium distribution ratio as the uranium concentration increases. The effect is illustrated by Figure IV-23. As shown on that figure, the Pu(IV) distribution ratio, E_a^o, between 3 M aqueous HNO_3 and 30% TBP decreases from about 15 in the absence of uranium to 1 at 75% uranium saturation of the solvent, and to 0.4 at 90% saturation.

2.4 Effect of nitric acid concentration

The addition of nitric acid (up to approximately 6 M) results in a large increase in the plutonium distribution ratio, E_a^o, as shown in Figures IV-21 and IV-25. However, at high nitric acid concentrations (above about 6 M), plutonium in the organic phase tends to be partially displaced by nitric acid so that a slight decrease in plutonium distribution ratio results.(42,63,144,175,229) Thus, the Pu(IV) distribution ratio between uranium-free aqueous nitric acid solutions and 30% TBP increases from 0.03 at 0.1 M HNO_3 to 33 at 6 M, but decreases to 30 upon a further increase in HNO_3 concentration to 8 M.

2.5 Effect of TBP concentration

The effect of TBP concentration in the solvent is illustrated by Figure IV-22 in which the distribution ratios for Pu(IV) and Pu(VI) are plotted as

a function of the TBP concentration. At the several conditions of Figure IV-22, the plutonium distribution ratio, E_a^o, increases with the 1.2 to 1.4 power of the TBP concentration in the 20 to 40 volume per cent TBP range, and with higher powers of the TBP concentration in the dilute-TBP regions. In the 2 to 5 per cent TBP range, the plutonium E_a^o varies with the 1.5 to 1.8 power of the TBP concentration. The relation in the dilute-TBP region approaches the simple second-power variation, which would be expected at unit activity coefficient and in the absence of other, complicating factors with the 2-to-1 TBP-to-plutonium nitrate molecular ratio in the Pu(IV) and Pu(VI) TBP complexes. Since the Pu(III)-TBP complex contains three TBP molecules per plutonium atom, E_a^o for Pu(III) should increase with a higher power of the TBP concentration than E_a^o's for Pu(IV) and Pu(VI). The dependence should approach a third-power one, but no data are available to illustrate this effect.(42,63, 192,193,194)

2.6 Effect of butyl acid phosphates

Dibutyl phosphate forms a strong complex with Pu(IV) and consequently any DBP present in the solvent will result in the loss of plutonium to the organic waste streams. The degree to which a small amount of DBP affects the plutonium distribution ratio is shown in the following table:

EFFECT OF DBP ON PLUTONIUM DISTRIBUTION

Feed: 30% TBP, 70% Amsco, tracer Pu(IV)
Extractant: water

DBP Concentration, Volume Per Cent	Plutonium Concentration, Counts/(Min.)(Ml.)		Plutonium Distribution Ratio, (G./L. Org.)/(G./L. Aq.)
	Organic	Aqueous	
0	850	120	7
10^{-4}	565	50	11
10^{-3}	5.0×10^4	744	68
10^{-2}	2.2×10^5	1440	150

Rather than being a pure compound with one or two DBP molecules, the complex may contain both TBP and DBP.

Strong complexes are not formed by Pu(III) with either DBP or MBP, and its distribution coefficient is not appreciably affected by the presence of either of these hydrolysis products. Plutonium can be stripped from solvent which contains DBP by reduction to its lower (III) valence state.(104,204,205)

2.7 Effect of aqueous-phase complexing agents

The Pu(IV) ion forms stable complexes with several anions such as phosphate (PO_4^{-3}), sulfate (SO_4^{-2}), oxalate ($C_2O_4^{-2}$), fluoride (F^-), and fluosilicate (SiF_6^{-2}). Since the complexes are not extracted by TBP but remain in the aqueous phase, the addition of any of the above ions lowers the apparent plutonium distribution ratio. The molecular formulas of the complexes formed

are, in general, not well established and several species are undoubtedly present in some cases, notably with phosphate. The extent to which the distribution ratio is reduced by the presence of a complexing agent is indicated by the following example for sulfate ion:(175)

EFFECT OF SULFATE ON PLUTONIUM DISTRIBUTION

30 volume per cent TBP. U absent.

M SO_4^{-2} in Aq. Phase	Pu Valence State	Distribution Ratio, (G./L. Org.)/(G./L. Aq.), at Indicated Aq.-Phase HNO_3 Concentration		
		1 M HNO_3	3 M HNO_3	6 M HNO_3
0	IV	3	16	30
0.001	IV	2	15	--
0.01	IV	0.8	13	28
0.1	IV	0.09	4	20
0.0	VI	1.2	2.5(a)	
0.1	VI	0.95	2.2(a)	

Note: (a) 2 M HNO_3.

The decrease in distribution ratio is most marked at low acidities, probably because of more complete ionization of the complexing agents under these conditions.

Phosphate ion reduces the plutonium distribution ratio to a greater extent that does sulfate ion. Phosphate is effective even in the presence of a large excess of uranium as shown in the following table:(144)

EFFECT OF PHOSPHATE ON PLUTONIUM (IV) DISTRIBUTION

30 vol. per cent TBP

% U Saturation of Solvent	M HNO_3 in Aq. Phase	M PO_4^{-3} in Aq. Phase	Distribution Ratio, (G./L. Org.)/(G./L. Aq.)
33	2.6	0	5
		0.025	2.3
		0.061	0.8
		0.125	0.23
63	3.0	0	2
		0.025	1.1
		0.061	0.36
		0.125	0.14

2.8 Effect of temperature

The plutonium (IV) distribution ratio increases approximately 30 per cent with an increase in temperature from 25°C. to 70°C. When uranium is also present the relative increase is more pronounced because of the decrease in the uranium distribution ratio, which results in a larger concentration of uncomplexed TBP at higher temperatures.

EFFECT OF TEMPERATURE ON PU(IV) DISTRIBUTION[183,219]

30 vol. per cent TBP

% Saturation of Solvent with U	M HNO_3 in Aq. Phase	Pu(IV) Distribution Ratio, (G./L. Org.)/(G./L. Aq.) 25°C.	50°C.	75°C.
0	0.2	0.07		0.1[a]
	1	3.0		4.3[a]
	4	24		27 [a]
80	0.5	0.10	0.20	0.41
	2	0.46	0.63	1.13
	5	1.6	2.4	3.1

Note: (a) 70°C.

The Pu(VI) distribution ratio, like that of uranium, decreases with increasing temperature, being less than half as great at 70°C. as at 25°C. in the absence of uranium, but showing a smaller decrease in the presence of uranium. The organic-to-aqueous distribution ratio of Pu(VI) in the 25 to 70°C. temperature range is approximately 1/8 of that of uranium at the same temperature.[183,219]

2.9 Equilibrium diagrams

Plutonium operating diagrams showing plutonium equilibrium curves for specific Purex columns along with typical operating lines are given in Chapter V.

3. Fission Products

3.1 General

While uranium and plutonium are readily extracted by TBP, with nitric acid as a salting agent, fission products are only very sparingly extracted by the solvent under the same conditions. The fission products of major interest in the Purex process are those which, being the most difficult to separate from the uranium and plutonium, normally determine the over-all decontamination factors obtained in the process. These are notably ruthenium, zirconium, and niobium. Iodine is also extracted, but once transferred tends

to remain in the solvent rather than follow one of the product streams. The other fission products have lower distribution coefficients and normally do not contribute appreciably to the residual radioactivity after one solvent-extraction cycle. The radioelement "spectrum" of the feed solution to the Purex process is discussed in Chapter II.

Since the ratio of beta to gamma activity varies between radioelements, gross fission-product distribution ratios determined on the basis of beta counts and of gamma counts are usually not the same.

Gross fission-product distribution ratios depend to an important extent on the relative concentrations of the various elements. The gross beta and gamma distribution ratios presented in the figures which are discussed below apply approximately to typical HAF (initial feed) radioactivity spectra. With the least extractable fission products removed in the HA Column, the gross organic-to-aqueous distribution ratio of the remaining fission products, which enter subsequent columns, is usually considerably higher.

3.2 Gross beta

Distribution ratio data for gross beta emitters are given in Figures IV-23, IV-24, and IV-25.

The gross beta distribution ratio, E_a^o, increases slightly with an increase in nitric acid concentration (from 0.02 to 0.03 on going from 1 M to 6 M HNO_3 in the absence of uranium at the conditions of Figure IV-25; but from 0.0006 to 0.0013 on going from 1 M to 3 M HNO_3 at 80% uranium saturation of the solvent, at the conditions of Figure IV-25). It decreases with an increase in uranium saturation of the solvent (from 0.02 to 0.002 on going from 0 to 75% saturation at the conditions of Figure IV-23).

The beta radioactivity in the HA Column feed is largely attributable to a mixture of rare-earth fission products. At most conditions gross beta distribution ratios are intermediate between the curves for total rare earths and ruthenium and zirconium-niobium, as would be approximated from the composition of the gross beta activity. The rare earths exhibit lower distribution ratios in general than Ru and Zr-Nb and hence are more nearly completely eliminated in the aqueous waste stream of the first column than are the latter elements. In succeeding columns the beta activity is normally attributable almost exclusively to ruthenium and zirconium.(51,121,194, 195,219, 229)

3.3 Gross gamma

Since approximately 70 per cent of the initial gross gamma radioactivity as measured is attributable to the zirconium-niobium pair, gross gamma distribution ratios are, as shown in Figure IV-24, intermediate between those of zirconium and niobium. Gross gamma organic-to-aqueous-phase distribution ratios are usually higher than those for gross beta (1.1 to 5 times as high at the conditions of Figure IV-24).(51,121,230)

3.4 Individual fission products

3.41 Ruthenium

Ruthenium is known to exist in Purex-process solutions in several chemical species, although the nature of the species present and the conversion of ruthenium from one form to another are incompletely understood. Ruthenium in solution may exist in all valence states from +1 to +8, but the +3, +4, and +8 forms are the ones most important to the Purex process, and the +4 state is probably the most common. It is probable that ruthenium-nitric acid compounds exist in two groups, those containing a nitroso group, and those without a nitroso group. In the nitroso-free group, $Ru(OH)_4$ has been isolated although $Ru(NO_3)_4$ has not. The introduction of a nitroso group results in compounds of the type $Ru(NO)(NO_3)_x(OH)_{3-x}$. Aqueous ruthenium nitrate chemistry is complicated by the varying ratios of nitroso, nitrate, and hydroxide in the complex (see above), which in turn affect the equilibrium distribution relationships. Several forms normally co-exist in the same solution. A disruption of the equilibrium between the species present, e.g., by the preferential solvent extraction of one species, results in the gradual conversion of other forms into the species removed from solution so as to reestablish the equilibrium.

As shown in Figures IV-24 and IV-25, the ruthenium distribution ratio is unique in that it decreases with an increase in nitric acid concentration (from 0.09 with 0.3 M aqueous HNO_3 to 0.0003 at 5 M under the conditions of Figure IV-25), presumably due to a change in the predominant chemical forms as a function of acidity. The data presented are for the predominantly relatively inextractable forms of ruthenium present at the column feed point. The effect of concentration of TBP in the solvent on the ruthenium distribution ratio is shown in Figure IV-26.

Treatment of partially decontaminated uranium solution (ICU) with $NaNO_2$ or NO_2 gas results in a higher ruthenium D.F. in the subsequent uranium decontamination cycle (5 times greater in one pilot-plant comparison).[220] However, treatment of freshly dissolved uranium with $NaNO_2$ does not increase the ruthenium D.F. in the following solvent-extraction cycle. Apparently in the latter case, the amount of relatively inextractable nitroso-ruthenium is already at equilibrium because of the treatment with nitric acid in the dissolving step.[45,48,121,152,192,206,219,220,230]

3.42 Zirconium and niobium

Data for the distribution of zirconium and its daughter, niobium, are given in Figures IV-23, IV-24, IV-25, and IV-26. The distribution ratios increase with increasing nitric acid and TBP concentrations, but decrease with an increase in the uranium saturation of the solvent. The zirconium distribution ratio varies approximately as the square of the TBP concentration. The increase with nitric acid concentration is different from the behavior of most elements in that the distribution ratio does not pass through a maximum for zirconium but continues to rise as the acid concentration is increased to 12 molar and above. The increase of distribution ratio with acid concentration

from 2 to 10 molar HNO_3 is attributed to the change in total nitrate ion concentration rather than acidity since zirconium extraction is nearly independent of hydrogen ion concentration in this range. Thus it is that under process conditions zirconium is, over-all, the most extractable of the important fission products although one or more ruthenium species, initially present in low concentrations, have considerably higher distribution ratios. The data given in Figures IV-23, IV-24, and IV-25 indicate that niobium decontamination should be considerably better than zirconium decontamination, but pilot-plant results show both elements to be major contaminants of the product streams.(220) The IB Column showed a higher decontamination factor for Nb than for Zr, but in the IC Column the reverse was true, and niobium data must therefore be considered questionable. (HA-HC Columns were not used.) The two elements are similar in their chemical behavior, but zirconium has been studied in more detail.

In aqueous nitrate solutions, zirconium may exist in several forms. Hydrolysis, polymerization, and complexing occur under some conditions. In Purex solutions polymerization is probably unimportant because of the low zirconium concentration and the acidity of the process streams. Hydrolysis occurs in 2-molar nitric acid to the extent of only a few per cent, but at lower acidities, the amount of hydrolysis is much greater. In 3-molar nitric acid zirconium is present principally in the form of negatively charged complex ions in which more than four NO_3^- groups are associated with each (tetravalent) Zr atom. The extraction of a species with a nitrate-to-zirconium ratio of approximately 4 is indicated by the dependence of the distribution ratio on the fourth power of the nitrate concentration, and by chemical analysis of a third phase which forms during the extraction of macro amounts of zirconium. The zirconium-TBP complex contains two, or possibly three, TBP molecules per zirconium atom.(36,39,51,123,219)

3.43 Iodine

Free iodine may be extracted by a TBP-hydrocarbon diluent type of solvent through complexing with the TBP or by reaction with the diluent.(140) In either case the iodine extracted by the solvent remains predominantly with the solvent during the stripping operation, and is subsequently partially removed during solvent washing. Extraction by the diluent is largely the result of reaction of the iodine with olefinic compounds which are present in virgin diluent in small concentrations. Iodine in the form of iodide is dissolved by TBP, but is readily washed from the solvent by water. In the form of iodate, iodine is not extracted by TBP-diluent mixtures. Although the levels of iodine activity may approach those of other fission products in the uranium product if relatively fresh fuel elements are processed, the iodine half life is short (8.1 days) and its activity is negligible in irradiated metal which has been "cooled" for 90 days or more.(216,220,222)

3.44 Other fission products

Although of less importance to the process than those already discussed,

distribution ratios for several other fission products, principally rare earths, have also been measured.

Aside from ruthenium, zirconium, and niobium, cerium is another fission-product element which may, at least partially, limit decontamination under normal process conditions. Under Purex conditions cerium is in its trivalent state. Distribution ratio data for cerium in 30 per cent TBP are plotted in Figure IV-24 and show that the distribution ratio passes through a maximum at about 3-molar nitric acid. At the feed point of the HA Column it is about 0.002.(121)

Distribution ratios for the mixture of rare earths present in irradiated uranium are shown in Figures IV-23, IV-24, and IV-25. The values are sufficiently low so that the radioactivity attributable to these fission products is usually negligible in comparison with that due to ruthenium and zirconium-niobium after one solvent-extraction cycle. In the range of 1 to 6-molar nitric acid, the distribution ratio is not appreciably influenced by the acid concentration. It is decreased by a factor of approximately 40 by the presence of uranium equivalent to 80 per cent saturation of the TBP.(203,219,229)

Distribution ratios of individual rare earths have been measured in isolated experiments. Gadolinium has an organic-to-aqueous distribution ratio of about 0.003 in the presence of 1 M nitric acid and 0.8 M UNH for 30 per cent TBP.(187) Europium, in an aqueous solution containing 1 M thorium nitrate and 2 M HNO_3, with 22.5 volume per cent TBP, has a distribution ratio of about 0.003. Under the same conditions, the distribution ratio of yttrium is about 0.001.(188) The following table lists distribution ratios for several rare earths (including cerium) in a 50 volume per cent TBP solvent system.(44,58)

DISTRIBUTION OF RARE EARTHS

HNO_3 Concentration, M		Distribution Ratio, (G./L. Org.)/(G./L. Aq.)						
Aqueous	Organic	Ce	Tm	Eu	Sm	Ho	Yb	Y
0.025	0.015	0.0093	0.0033	0.012	0.011	--	--	--
0.10	0.025	0.013	0.0053	0.017	0.017	0.00074	0.00051	0.0017
1.0	0.25	0.045	0.030	0.092	0.087	0.041	0.013	0.018
3.0	0.73	0.039	0.081	0.13	0.13	0.11	0.048	0.071
5.0	1.2	0.023	0.12	0.10	0.095	0.12	0.086	0.085
7.0	1.7	0.013	0.19	0.089	0.074	0.15	0.18	0.15

For an aqueous-organic system with diluent absent, the distribution of yttrium increased from 0.1 at 1 M HNO_3 to 100 at 16 M HNO_3; under the same conditions the distribution ratio of scandium increases from 0.3 to 600. Each exhibits a second or third-power dependence on the TBP concentration.(52)

3.5 Factors affecting distribution coefficients

3.51 Effect of uranium concentration

The presence of uranium suppresses the distribution of fission products into the organic phase, as shown in Figure IV-23. This is attributed to the fact that uranium is strongly complexed by TBP and consequently reduces the free TBP concentration available for fission-product complexing. As plotted, the extent of the decrease appears comparable, within the limits of experimental accuracy, for different fission products, but is greater for ruthenium. The greater reduction for ruthenium may be due to the increase in nitric acid concentration in the equilibrated aqueous phase as the uranium concentration was increased under the condition of Figure IV-23. It is inferred indirectly from the data in Figures IV-23, IV-24, and IV-25 that the change in E_a^o for ruthenium as a function of uranium saturation is comparable with the change for zirconium if the concentration in the equilibrated nitric acid aqueous phase is held constant.(51,219,229)

In the scrub sections of the uranium extraction columns the solvent is approximately 70 per cent saturated with uranium. The following data obtained in a miniature mixer-settler show the influence of uranium saturation of the solvent on decontamination for an HA "column" under the approximate conditions of the Purex HW #3 Flowsheet, but with the percentage saturation of the solvent with uranium varied as shown.(161)

EFFECT OF URANIUM SATURATION OF SOLVENT ON F.P. DECONTAMINATION

	Arithmetic Decontamination Factors, D.F.	
	65% U Saturation	45% U Saturation
Gross beta	6500	1340
Gross gamma	2000	290
Ruthenium	338	79
Zirconium	4770	227
Niobium	5240	341

3.52 Effect of nitric acid concentration

The effects of nitric acid concentration on the distribution of fission products are illustrated in Figures IV-24 and IV-25. In general, an increase in nitric acid concentration increases the distribution ratio, although in the case of ruthenium the effect is reversed. The over-all effect of nitric acid is determined by the influence of nitrate and hydrogen ion concentrations on the competing complexing reaction of the fission products with TBP and with components of the aqueous solution.(229)

3.53 Effect of TBP concentration

Figure IV-26 illustrates the effect of the TBP concentration in the solvent on the distribution ratios of zirconium and ruthenium. At the range of conditions of Figure IV-26, the distribution ratio, E_a^o, increases with the 1.4th to second power of the TBP concentration. The TBP-concentration dependence of the distribution ratio for cerium is comparable.(39,206)

3.54 Effect of diluent

The hydrocarbon diluent, in its original state, has no appreciable effect on fission-product decontamination. Diluent containing olefinic or aromatic components is susceptible to nitration, however, and some nitration products increase fission-product E_a^o values and thus exert an adverse effect on decontamination.(117) For that reason, the Purex process requires the use of a diluent free of significant concentrations of aromatics and olefins.

Olefins, if present in the diluent, also lead to an increase in the radioactivity level of the solvent through reaction with iodine when pile fuel "cooled" for less than 90 days is being processed.(220)

3.55. Effect of dibutyl phosphate

When Purex solvent contains DBP, a large increase in the zirconium distribution ratio, E_a^o, is noted. Niobium extraction is also affected in a similar fashion, but to a much smaller extent. Ruthenium and cerium are reportedly unaffected by the presence of DBP.(117) The solvent treatment process described in Chapter XI effectively removes DBP and its complexes.

3.56 Effect of complexing agents

Aqueous-soluble complexing agents have the effect of decreasing the extractability of zirconium by causing its retention in the aqueous phase. The extraction of ruthenium, however, is not suppressed by the complexing agents which are effective with elements such as Zr; e.g., oxalate and phosphate ions. The effects of oxalate and fluosilicate ions on the distribution of zirconium, cerium, and ruthenium are indicated in Table IV-5. The zirconium distribution ratio, E_a^o, is decreased by a factor of approximately 40 by 0.01 M oxalate ion and by a factor of approximately 20 by 0.01 M fluosilicate ion, at the conditions of Table IV-5. Other reports indicate that the zirconium E_a^o, at conditions tested, was decreased by factors of 6 and 100 by 0.1 M sulfate and 0.1 M phosphate ions, respectively. (These complexing agents, which tend to increase fission-product decontamination factors, generally also have the undesirable effect of complexing plutonium and uranium.)(51,112)

3.57 Effect of temperature

Fission-product distribution ratios at comparable degrees of solvent saturation and aqueous salting strength are probably not greatly affected by temperature.(219) However, for a given aqueous-phase composition, an increase in temperature results in a decreased equilibrium concentration of uranium in the organic phase, and, as discussed previously in this section, the organic-to-aqueous distribution ratios of the principal fission products are increased by this change in uranium concentration. Elevated temperatures also result in the more rapid formation of dibutyl phosphate from the hydrolysis of TBP, and thus cause increased extraction of zirconium through complexing with DBP.(125) Improved decontamination factors upon increasing the temperature to 50 to 70°C. recently reported from K.A.P.L.(183,184) may be due to changes in the physical properties of the solution, resulting in lower transfer-unit height.

4. Nitric Acid

4.1 Introduction

As discussed in Section A of this chapter, the recovery and reuse of nitric acid salting agent is one of the fundamentals of the Purex process. Acid is present in each of the columns, and its concentration greatly influences the distribution ratios of uranium, plutonium, and fission products, as has been discussed in preceding subsections of this chapter. Unlike other salting agents such as aluminum nitrate, nitric acid is extracted by the solvent and therefore its concentration in each phase varies widely throughout a column.

Extraction data and the solubility of nitric acid in TBP indicate that under normal Purex conditions nitric acid is extracted by TBP as a 1:1-molecular-ratio complex, as shown below, although a complex with a 2:1 HNO_3/TBP ratio probably exists at high HNO_3 concentrations:[42]

$$H^+ + NO_3^- + TBP \rightleftharpoons HNO_3 \cdot TBP \quad \ldots\ldots\ldots\ldots\ldots\ldots (10)$$

The effects of changes in process variables may be qualitatively rationalized on the basis of the preceding equilibrium. Neglecting activity coefficients, the distribution ratio is given by the expression:

$$E_a^o = K(NO_3^-)(TBP) \quad \ldots\ldots\ldots\ldots\ldots\ldots\ldots\ldots (11)$$

where K = equilibrium constant;

(NO_3^-) = molarity of nitrate ion in the aqueous phase; and

(TBP) = molarity of uncomplexed TBP in the organic phase.[39,42,101,130,173,212]

4.2 Effect of uranium concentration

The effects of uranium concentration on the nitric acid distribution ratio are illustrated in Figures IV-27 and IV-28. At low acid and uranium concentrations, an increase in the uranium concentration increases the nitric acid distribution ratio, E_a^o, because of the increase in the nitrate ion concentration. For example, with 0.1 M HNO_3 in the aqueous phase, the HNO_3 E_a^o increases from 0.06 to 0.09 upon going from 0% to 10% organic-phase uranium saturation. At higher acid or uranium concentrations, the addition of uranyl nitrate decreases the nitric acid distribution ratio, e.g., from 0.09 to 0.03 upon going from 10% to 80% uranium saturation with 0.1 M aqueous HNO_3, the effect of the increase in nitrate ion concentration being counteracted by the reduction in free TBP concentration.[62,175]

4.3 Effect of nitric acid concentration

The nitric acid distribution ratio may be either increased or decreased by the addition of nitric acid, as may be seen by reference to Figure IV-27.

At low total nitrate ion concentrations, the addition of HNO_3 results in an increase in nitrate ion concentration that is, percentagewise, larger than the decrease in free TBP concentration; but at high initial nitrate ion concentrations, the decrease in free TBP more than compensates for the increase in nitrate ion concentration and thus the distribution ratio decreases with the addition of acid. In a nitric acid-TBP system above 4 molar in nitric acid in the aqueous phase, the nitric acid concentration in the organic phase is greater than the theoretical saturation of the solvent based on a complex of the form HNO_3.TBP.(42,59,175,178,190,199)

A small amount of nitric acid, derived from hydrolysis of UNH, is extracted by TBP even from stoichiometrically neutral aqueous uranyl nitrate solutions. Accordingly, the distribution-ratio concept cannot be applied in the conventional sense to HNO_3 in uranium-bearing systems in which the aqueous-phase stoichiometric HNO_3 concentration is very low (substantially below 0.1 M). Organic-phase HNO_3 concentrations in equilibrium with stoichiometrically neutral aqueous UNH are usually not much lower than those in equilibrium with 0.1 M HNO_3 at the same UNH concentration: they range from 0.002 to 0.004 M. (59,175,178,199)

4.4 Effect of TBP concentration

The equilibrium expression for the formation of the HNO_3-TBP complex indicates that the distribution ratio should be directly proportional to the concentration of uncomplexed TBP. In uranium-free systems this prediction is reasonably well borne out for aqueous-phase nitric acid concentrations of 3 to 6 M. At lower acidities, however, the E_a^o increases with a higher power of the TBP concentration -- with approximately the 1.5 power at aqueous HNO_3 molarities below 1. In the presence of uranium, it is inferred indirectly (from data obtained with a single solvent concentration) that the dependence of E_a^o on the free TBP concentration is greater than first-power but less than second-power. (173,190,199,206)

4.5 Effect of temperature

The nitric acid distribution ratio is relatively insensitive to temperature, as shown in Figure IV-29. In the absence of uranium the distribution ratio, in general, decreases slightly (25 to 30%) with an increase in temperature from 25°C. to 70°C. In uranium systems the nitric acid distribution ratio may increase with temperature, depending on the relative concentrations of acid and uranium, due to the reduction in concentration of uranium in the solvent at elevated temperatures for a given aqueous composition (discussed in Subsection 1).(183,219)

5. Uranium X_1 and Uranium X_2

5.1 Introduction

Uranium X_1 (Th-234) and uranium X_2 (Pa-234) are products of the radioactive decay of U-238. As brought out in Section A, they are of importance to the Purex process because they form relatively strong complexes with TBP

and may contribute appreciable radioactivity to the plutonium product stream. Both are short-lived: the half lives are 24.5 days for UX_1 and 1.1 minutes for UX_2. Corrections for their presence may be necessary in order to determine the decontamination from fission products achieved in the process.

5.2 Distribution ratios

Considerable work has been done on the extraction of thorium by TBP in connection with Thorex process development; much less has been done on the extraction of protactinium. Thorium at the low concentration of UX_1 probably forms a complex with TBP of the form $Th(NO_3)_4.4TBP$, although it also forms complexes with a lower TBP/Th ratio at higher thorium concentrations. Typical UX_1 and UX_2 distribution ratios are given in Figure IV-30, at various acidities in uranium-free systems. UX_1 and UX_2 E_a^o values are of the order of 100 to 1000 times higher than those of fission products. The UX_1-Pu separation factor, i.e., the ratio of E_a^o's for Pu and UX_1, ranges approximately from 5 to 10. The UX_1 distribution ratio increases approximately as the square of the TBP concentration. As with uranium, complexing agents such as sulfate and phosphate greatly depress the distribution ratio. An increase in temperature of 30°C. decreases the distribution ratio by about 20 per cent.

Experiments carried out in miniature mixer-settlers operated at approximately Purex HW #3 Flowsheet conditions, but with the co-decontamination cycle omitted, gave the following decontamination factors for UX_1:[163]

Purex Column	Product Stream	UX_1 D.F. Experimental	UX_1 D.F. Calculated
IA	1AP	1.008	1.08
IB	1BP	50	25
2A	2AP	1.32	1.72
Over-all process	2BP	67	50

It was found that increasing the IBX acidity from 0.1 to 0.5 M in HNO_3 increased the IB Column D.F. from 50 to 250. Increasing the 2AS flow rate to 125% of flowsheet increased the 2A Column D.F. to 7.7. The results of these studies indicate an as yet unresolved difference with the O.R.N.L. "hot" pulse-column results, with an approximately 30-fold higher UX_1 and UX_2 over-all decontamination factor being reported for the plutonium stream in the Oak Ridge studies.

The distribution ratio of UX_2 is of the same order of magnitude as that of UX_1 as shown in Figure IV-27, but any radioactivity due to UX_2 will disappear rapidly (after the elimination of UX_1) because of its very short (1.1-min.) half life.[59,163,168,175,176,206,212]

6. Neptunium

The distribution ratios of Np(IV) and Np(VI) at various nitric acid concentrations are shown in Figure IV-30. Their characteristics, with respect to E_a^o values and the effects of HNO_3 and TBP concentrations, are very similar

to those of the corresponding plutonium species, but neptunium is not reduced below the IV valence state by ferrous ion. On the basis of the effect of TBP concentration, complexes containing two TBP molecules per neptunium atom are postulated for both valence states.

7. Americium and Curium

Americium and curium are transplutonium elements which, extractionwise, resemble the rare earths, discussed previously. The two elements exhibit similar distribution ratios.

The americium distribution ratios between nitric acid solutions and organic phases containing TBP are given in the following table:

M HNO_3 in Aqueous Phase	Americium Distribution Ratio, (G./L. Org.)/(G./L. Aq.) 100% TBP	50% TBP in Dibutyl Ether
0.3	0.06	0.02
1	0.2	0.04
3	0.3	0.04
6	0.2	0.03
10	0.3	0.04

The dependence on TBP concentration is approximately second-power at low acidities (approximately 1 M HNO_3) and third-power at acidities above 4 M HNO_3. Americium is more effectively salted into the organic phase by metal nitrates than by nitric acid, as shown by the fact that with calcium nitrate as the salting agent and in the absence of free acid, the distribution ratios between 30 per cent TBP and solutions of aqueous nitrate ion concentrations of 2 and 6 molar are 0.2 and 10, respectively.(50,52,225)

8. Other Metallic Ions

Non-radioactive metallic ions are of potential process significance as contaminants of the product streams. The distribution coefficients are very low, as indicated by the following representative data:

DISTRIBUTION OF MISCELLANEOUS NITRATES

Ion	Aqueous-Phase Composition	Vol.% TBP	Distribution Ratio (G./L. Org.)/(G./L. Aq.)	Reference
Al^{+3}	4.7 M HNO_3, 7.2 g./l. Al	15	0.0003	(88)
Ca^{+2}	4.7 M HNO_3, 7.5 g./l. Ca	15	0.0003	(88)
Ca^{+2}	1 M $Ca(NO_3)_2$	30	0.008	(225)
Co^{+2}	2.14 M $Co(NO_3)_2$	60	0.002	(37)
Cr^{+3}	3 M HNO_3, 1.0 M $Cr(NO_3)_3$	100	0.0001	(169)
Cr^{+3}	3 M HNO_3, 1.9 M $Cr(NO_3)_3$	100	0.0001	(169)
Cu^{+2}	3 M HNO_3, 0.8 M $Cu(NO_3)_2$	100	0.0004	(169)
Fe^{+2}	4.7 M HNO_3, 0.7 g./l. Fe	15	0.005	(88)
Fe^{+2},Fe^{+3}	2 M HNO_3, 2.8 g./l. Fe	12.5	0.0003	(136)
Mg^{+2}	4.7 M HNO_3, 2 M $Mg(NO_3)_2$	15	0.0003	(88)
Na^{+}	3 M HNO_3, ca. 0.2 M UNH, 4 g./l. Na (HA Column scrub section)	30	0.0003	(136)
Na^{+}	2 M HNO_3, 0.18 M $NaNO_3$	12.5	0.003	(136)
Ni^{+2}	3 M HNO_3, 0.9 M $Ni(NO_3)_2$	100	0.00006	(169)
Ni^{+2}	3 M HNO_3, 1.7 M $Ni(NO_3)_2$	100	0.00006	(169)
Zn^{+2}	2 M $Zn(NO_3)_2$	12.5	0.0001	(136)

REFERENCES

(1) G. B. Barton, Private communication re path of Np in Purex process. H.A.P.O. 2-5-55.

(2) Blumenthal & Herbert, Trans. Farad. Soc. 41, 611 (1945).

(3) J. S. Buckingham, Memorandum: Purex Waste Concentration Equilibrium Data. H.A.P.O. 1-30-53.

(4) L. L. Burger, Memorandum: "Soltrol-170" Diluent. H.A.P.O. 9-1-54.

(5) L. L. Burger, Private communication re vapor pressure of TBP. H.A.P.O. August, 1954.

(6) Cupery, Ind. and Eng. Chem. 30, 627 (1938).

(7) M. H. Curtis, Memorandum: Emulsions and Disengaging Times. H.A.P.O. 4-21-52.

(8) Drushel, Ann. J. Sci. 40,643 (1915).

(9) J. P. Duckworth, Private Communication re contact angles of Purex process solutions with fluorothene (Kel-F), teflon, and polythene. H.A.P.O. June, 1953.

(10) H. W. Fox and W. A. Zisman, J. Coll. Sci., 5, 514 (1950).

(11) F. H. Getman and F. Daniels, Outlines of Physical Chemistry, 7th Edition, John Wiley and Sons, Inc., New York, (1946). P. 163.

(12) Grasselli Chemicals Department, E. I. du Pont de Nemours & Co., Wilmington, Delaware. "Sulfamic Acid and Its Salts." Undated.

(13) M. K. Harmon, Memorandum: Purex Emulsification Studies I, II, & III. H.A.P.O. 6-12-51.

(14) H. H. Hopkins, Memorandum: Solvent Quality Tests. H.A.P.O. 10-18-54.

(15) G. M. Kosolapoff, John Wiley and Sons, Inc., New York. 1950 (Organophosphorous Compounds)

(16) R. F. Maness, Memorandum: Shell Diluent E-2342. H.A.P.O. 3-31-53.

(17) R. F. Maness, Memorandum: Mutual Solubilities of Water and TBP in Solvent-Aqueous Systems. H.A.P.O. 12-1-53.

(18) R. F. Maness, Private communication re contact angles of Purex process solutions with stainless steel and graphite. H.A.P.O. February, 1953.

(19) R. F. Maness, Private communication re dispersion and disengaging times for Purex Flowsheet HW #3 solutions agitated with stainless-steel and Kel-F sieve plates. H.A.P.O. 2-18-55.

(20) Monthly Report - Solvent Extraction Sub-Unit - November, 1954. H. H. Hopkins, Jr. 11-29-54.

(21) R. H. Moore, Private communication re nitrite ion effect on hydrolysis of TBP. H.A.P.O. November, 1954.

(22) J. H. Perry, Chemical Engineers' Handbook, 3rd Edition, McGraw-Hill Book Company, Inc. New York (1950).

(23) Plummer and Burch, J. Chem. Soc., 292 (1929).

(24) Savannah River Laboratory, TNX Semiworks, Bi-Weekly Report No. 2, Program No. 22, Study No. 8512. H. Pollock. 7-19-53. (Investigations of the Chemical and Physical Properties of TBP.)

(25) Savannah River Laboratory, TNX Semiworks, Bi-Weekly Report No. 3, Program No. 7, Study No. 8513. M. R. Caverly. 7-29-53. (Determination of Interfacial Tension of Various Purex Solutions.)

b (26) Savannah River Laboratory, TNX Semiworks, Bi-Weekly Report No. 4, Program No. 15, Study No. 8517, June 23, 1953, G. M. Nichols, T. H. Siddall. (Laboratory Investigations of Exothermic Reactions of Organic-Aqueous Mixtures Encountered in the Purex Process.)

(27) Seaborg, Katz, and Manning, NNES Division IV, Plutonium Project Record, Volume 14B, The Transuranium Elements, McGraw Book Co., Inc., New York, (1949) P. 478.

(28) Seidell, Solubilities of Inorganic and Metal Organic Compounds, 3rd Edition, Vol. I, Van Nostrand Co., Inc., New York, (1948) P. 519.

(29) C. M. Slansky, Unpublished data, H.A.P.O. October, 1948.

(30) Tegge, The Performance of Solvent Extraction Equipment, Pennsylvania State College Thesis, August, 1942, P. 97.

(31) Victor Chemical Co., Physical Properties and Solubilities of Alkyl Phosphates. Undated.

(32) Washburn, International Critical Tables, Vol. II. (1927) Pp. 146, 151.

(33) Washburn, International Critical Tables, Vol. III. (1928) P. 68.

(34) W. A. Zisman, J.A.C.S. 74,2123 (1952).

(35) AERE-CE/M-19 Review of Available Data on Tri-n-Butyl Phosphate Systems For the Separation of Uranium and Plutonium from Fission Products. I. Wells. Atomic Energy Research Establishment, Harwell, Berks (England). November, 1950.

(36) AERE-C/M-122 The Effect of Uranium Concentration on the Extraction of Zirconium and Plutonium by Tributyl Phosphate. W. H. Hardwick, F. Bedford, and G. M. Gillies. Undated.

(37) AERE-C/R-773 The Effect of Diluents on the Solvent Extraction of Nitrates. G. M. Waind, et al. 3-11-52.

(38) AERE-C/R-816 The Chemistry of Ruthenium: Part I, The Formation and Examination of an Extractable Ruthenium Nitrate in Macroscopic Amounts; Part 2, The Effect of Ferrous Sulphamate Treatment. F. S. Martin and G. M. Gillies. 12-10-51.

(39) AERE-C/R-923 The Extraction of Zirconium by Tributyl Phosphate. H. A. C. McKay, W. H. Hardwick, and F. C. Bedford. 1952.

(40) AERE-CE/R-968 Tri-n-Butyl Phosphate Studies, Parts I, II, III. J. Kennedy and S. S. Grimley. 10-6-52.

(41) AERE-C/R-973 The Chemistry of Ruthenium: Part IV, The Preparation and Isolation of Ruthenium Nitroso-Trinitrate; Part V, The Solvent Extraction of Ruthenium Nitroso-Trinitrate. F. S. Martin and G. M. Gillies. 7-18-52.

(42) AERE-C/R-994 The Extraction of Plutonium by Tributyl Phosphate, Part I. H. A. C. McKay and P. R. Woodgate. 11-24-52.

(43) AERE-C/R-1116 The Extraction of Plutonium by Tributyl Phosphate, Part II. H. A. C. McKay and G. R. Best. 1953.

(44) AERE-C/R-1117 The Extraction of Neptunium by Tributyl Phosphate. J. K. Dawson, R. Elliott, and H. A. C. McKay. 2-15-53.

(45) AERE-X/R-1226 Chemistry of Ruthenium in Nitric Acid Solutions. A. R. Powell, F. M. Lever, and N. R. W. Benwell. October, 1953.

(46) AERE-CE/R-1283 Radiometric Studies with Phosphorous-32 Labelled Tri-n-Butyl Phosphate: Part I, Solubility and Distribution Studies. J. Kennedy and S. S. Grimley. 12-1-53.

(47) AERE-CE/R-1284 Radiometric Studies with Phosphorous-32 Labelled Tri-n-Butyl Phosphate: Part 2, Acid-Alkali Hydrolysis. J. Kennedy and S. S. Grimley. 12-18-53.

(48) ANL-4265 Minutes on Conference on the Chemistry of Ruthenium; December 13 and 14, 1948. H. Baxman, E. Turk, and L. Deutsch, Argonne National Laboratory.

(49) ANL-4463 ANL Summary Report for January, February, and March, 1950, Chemical Engineering Division. S. Lawroski and C. E. Stevenson. Undated.

(50) ANL-4490 ANL Summary Report for April, May, and June, 1950, Section C-1, Chemistry Division. D. W. Osborne, Ed. 7-27-50.

(51) ANL-4530 TBP Solvent Extraction Process for Recovery and Decontamination of Uranium 235 Fuel Discharged from Experimental Breeder Reactor. Leslie Burris and R. C. Vogel. 9-15-50.

(52) ANL-4593 ANL Summary Report for October, November and December, 1950, Section C-1, Chemistry Division. W. M. Manning, Director. 2-1-51.

(53) ANL-4872 ANL Summary Report for April, May, and June, 1952, Chemical Engineering Division. S. Lawroski. 8-1-52.

(54) ANL-4922 ANL Summary Report, July, Aug., and Sept., 1952, Chemical Engineering Division. S. Lawroski and C. E. Stevenson.

(55) ANL-5128 Minutes of Symposium: Nitric Acid - Organic Material Reactions. Author not stated. 6-11-53.

(56) ANL-5242 Process for Recovering Fuel from the Mark I Submarine Thermal Reactor. A. A. Jonke, et al. 2-24-54.

(57) B-4.380.216 Solvent Extraction. R. H. Smellie, Jr. and D. P. Krause, Carbide and Carbon Chemical Corporation. 7-16-47. P. 5.

(58) BMI-261 Final Report on Distribution of Rare-Earth Tracers Between Aqueous and Tributyl Phosphate - Diluent Phases. R. H. Blackmore, A. E. Bearse, and G. D. Calkins, Battelle Memorial Institute. 6-20-52.

(59) BMI-262 Final Report on Purification of Thorium Nitrate by Solvent Extraction with Tributyl Phosphate; Laboratory Investigations. R. A. Ewing, et al. 7-31-52.

(60) BNL-C 7991 Effects of Gamma Irradiation on Nitro Alkane Formation in the Purex and Redox Systems. P. Colombo, Brookhaven National Laboratory. 4-20-54.

(61) CEI-2 Sulphamic Acid and Its Salts. R. G. Monk, Atomic Energy Project (Canada). October, 1948.

(62) CEI-22 Tributyl Phosphate Process III. A. M. Aikin and R. M. Dinzey. 12-31-50.

(63) CEI-37 Tributyl Phosphate Process XIV, The Extraction of Plutonium IV by TBP. J. C. Turgon and A. M. Aikin. 3-17-52.

(64) CL-P-260 Separation Processes. I. Perlman. 6-8-44.

(65) CL-697 Project Handbook, Chapter II, Physical and Chemical Properties. R. S. Mulliken and J. A. Lane. May, 1945.

(66) CN-1702 Report for Month Ending June 1, 1944, Chemical Research: Basic Chemistry of Plutonium. L. B. Asprey, et al. 6-26-44. P. 28.

(67) CK-1968 July Meeting with Dr. C. A. Thomas on Final Purification and Metallurgy of "49". B. S. Cunningham. 8-7-44. Pp. 31, 34.

(68) CK-2240 Survey of the Chemistry of Plutonium. L. I. Katzin. 10-1-45. P. 25.

(69) CN-2680 Ionic Equilibria and Reaction Kinetics of Aqueous Solutions of Plutonium. M. Kasha and G. E. Sheline. 1-17-45.

(70) CN-2767 Report for the Month of March, 1945, Chemical Research: Basic Chemistry of Plutonium. G. T. Seaborg, et al. 4-13-45.

(71) CN-2830 Oxidation - Reduction Potentials of Plutonium Couples as a Function of pH. K. A. Kraus. 1-23-47.

(72) CN-3399 Depolymerization of Polymeric Pu(IV) Solutions in Nitric Acid. K. A. Kraus. 6-30-45.

(73) CN-3733 The Chelate Process I. J. R. Thomas. 3-3-47.

(74) CN-3819 Ionic and Molecular Species in Solution. J. P. Hindman. 5-19-47. Section 4.1.

(75) CC-3869 Oxidation States, Potentials, Equilibria and Oxidation-Reduction Reactions of Plutonium. R. E. Connick. 5-5-48.

(76) CF-49-6-313 A Preliminary Report on the Development of a Process for the Separation of Zr and Cb from Mixtures of Fission Products. W. B. Baldwin, et al. 6-30-49.

(77) CF-51-10-28 Purex Process, Vapor Pressure of Amsco 123-15 and of 30 per cent TBP in Amsco 123-15. L. E. Line. 10-3-51.

(78) CF-51-11-66 O.R.N.L. Quarterly Report on Denitration of Uranyl Nitrate for Period August 10 to November 10, 1951. V. J. Reilly. 11-13-51.

(79) CF-51-11-118 Letter Report on Thorium Project, November 15, 1951. A. E. Bearse. 11-20-51.

(80) CF-51-12-118 Results of Evaluation of the Savannah River Type Evaporator Using Synthetic High Activity Waste. W. B. Watkins. 12-14-51.

(81) CF-52-2-189 O.R.N.L. Purex Pilot Plant Data Manual. J. M. Chandler, et al. 3-10-52.

(82) CF-52-5-117 Pilot Plant Evaluation of Uranium Product Silica Gel Treatment. W. B. Watkins. 5-14-52.

(83) CF-53-3-132 Hydroxylamine and Nitrous Acid Behavior in the Second Plutonium Cycle. V. J. Reilly. 3-17-53.

(84) CF-53-9-196 Radiation Effects in Chemical Processing. G. I. Gathers. 9-24-53.

(85) DP-25 Interim Technical Report, TNX Evaporator Incident, January 12, 1953. T. J. Colven, Jr., G. M. Nichols, and T. H. Siddall. 5-15-53.

(86) GEH-11551 Monthly Report - Redox - October. J. F. Flagg, et al. 11-10-47. P. 16.

(87) GEH-12505 Monthly Report - Redox - March. J. F. Flagg, et al. 4-7-48. Pp. 8-10.

(88) GEH-17923 Quarterly Progress Report, July 1, 1950: Recovery of Plutonium from Slag and Crucibles. L. J. Mullins and W. C. Hazen. 10-30-50.

(89) HDC-826 Redox Technical Handbook. Author not stated. December 1948.

(90) HW-6049-T Secret Notebook. H. C. Carney. 3-3-53.

(91) HW-8309 Freezing Point Data for UNH-H_2O-HNO_3 Systems. M. K. Harmon. 12-17-47.

(92) HW-10557 Production of Higher Isotopes in Recycled Uranium. P. F. Gast. 7-24-48.

(93) HW-11143 Design of AT Solution Retain Sample Containers. M. J. Szulinski. 9-21-48.

(94) HW-11276 Properties of the System: $UO_2(NO_3)_2$-$Al(NO_3)_3$-HNO_3 (or NaOH)-H_2O-Hexone, Part II: Density, Apparent Molar Volume, and Viscosity. L. L. Burger, et al. 3-22-49.

(95) HW-12166 Plutonium Isotopes in Recycled Uranium. P. F. Gast. 1-17-49.

(96) HW-13697 The Preparation of Ferrous Sulfamate. F. Clagett. 6-10-49.

(97) HW-14559 Properties of the System: $UO_2(NO_3)_2$-$Al(NO_3)_3$-HNO_3 (or NaOH)-$Na_2Cr_2O_7$-$NaNO_3$-H_2O, Part V: pH Values. L. L. Burger, et al. 9-29-49.

[redacted]

(98) HW-14728 The Design and Operation of the Pulse Column. W. A. Burns, et al. 10-12-49.

(99) HW-15079 Equipment and Space Requirements for the Rala Spectrochemical Facilities. J. A. Parodi. 11-14-49.

(100) HW-15172 Evaporation of Process Streams in the Tributyl Phosphate Process for Uranium Recovery. R. M. Wagner and C. M. Slansky. 11-21-49.

(101) HW-15230 The Extraction of Uranium in the Tributyl Phosphate Metal Recovery Process. R. L. Moore. 9-1-49.

(102) HW-15456 The Oxidation of Plutonium with Ozone and Extraction Behavior in the Redox Process. C. F. Callis and R. L. Moore. 12-20-49. P. 9.

(103) HW-17339 Equilibria of Uranium and Nitric Acid Between Waste Metal Solutions and Tributyl Phosphate in Hydrocarbon Diluents. F. Clagett. 3-24-50.

(104) HW-17542 Progress Report for March, 1950, Chemical Research Section. F. W. Albaugh. 4-17-50.

(105) HW-17698 Ferrous Sulfamate Stability in the RA System. F. Clagett. 4-20-50.

(106) HW-17747 Uranium Phase Equilibria in the TBP Process. D. P. Granquist and E. T. Merrill. 3-1-51.

(107) HW-17822 Refractive Index Measurements. L. L. Burger. 5-17-50.

(108) HW-18188 The Solubility of Plutonium (IV) Monobutyl Phosphate. R. L. Moore. 6-28-50.

(109) HW-18352 Chemical Development Section Technical Memorandum: TBP Process-Solvent Washing and Reconditioning. M. H. Curtis. 7-5-50.

(110) HW-18406 Chemical and Physical Properties vs. Degree of Concentration of Uranyl Nitrate - Nitric Acid, etc. F. Clagett. 7-24-50.

(111) HW-18700 Redox Technical Manual. Author not stated. 7-10-51.

(112) HW-18880 Progress Report for August, 1950, Chemical Research Section. O. F. Hill and F. J. Leitz. 9-19-50.

(113) HW-19065 Comparison of Diluents for Tributyl Phosphate. L. L. Burger. 10-6-50.

(114) HW-19140 Uranium Recovery Technical Manual. Author not stated. 11-10-51.

(115) HW-19146 Quarterly Progress Report, Research and Development Activities for July, August, and September, 1950. H. M. Parker. 10-16-50.

(116) HW-19156 Specifications, Acceptance and Sampling Procedures for Essential Materials. E. W. Rebol. May, 1951.

(117) HW-19503 Progress Report for October, 1950, Chemical Research Section. O. F. Hill, et al. 11-17-50.

(118) HW-19932 Laboratory Conversion of UNH to UO_3. R. F. Maness and F. Clagett. 1-10-51.

(119) HW-19959 The Hydrolysis Products of TBP and Their Effects on the TBP Process for Uranium Recovery. R. M. Wagner. 7-31-51.

(120) HW-20580 Kinetics of Plutonium Reduction in the Redox IB Column. R. L. Moore. 3-20-51.

(121) HW-20863 Quarterly Report, January through March, 1951, Chemical Research Section. O. F. Hill, et al. 4-16-51.

(122) HW-20936 Solubility of TBP in Aqueous Solution. L. L. Burger and R. C. Forsman. 4-2-51.

(123) HW-21487 Zirconium Chemistry. The Nitrate and Thenoyl Trifluoracetone Complexes and the Hydrolytic Species. W. H. McVeg. 6-29-51.

(124) HW-21685 Progress Report, Chemical Development Unit, June, 1951. F. W. Woodfield, 7-18-51.

(125) HW-22138 Quarterly Report, July through September 1951, Chemical Research Section. O. F. Hill and F. J. Leitz. 10-1-51.

(126) HW-22742 Recuplex Stage Height, Transfer-Unit Height, and Stage Efficiency Calculations. L. E. Bruns. 11-16-51.

(127) HW-23011 Contact Angles on Fenske Extractor and Disengaging Time Studies of Recuplex Solutions. F. Clagett. 11-21-51.

(128) HW-23160 Quarterly Report, October through December, 1951, Chemical Research Section. O. F. Hill and F. J. Leitz. 1-15-52.

(129) HW-23301 A Continuous Process for the Oxidation of the Purex IBP Stream. A. S. Wilson and J. L. Swanson. 1-17-52.

(130) HW-23344 The Recuplex Process. C. Groot and H. H. Hopkins, Jr. 10-15-52.

(131) HW-24641 Progress Report, Chemical Development Unit, May, 1952. F. W. Woodfield. 5-31-52.

(132) HW-24763 Purex Chemical Flowsheet HW #1. R. E. Tomlinson and F. W. Woodfield. 6-30-52.

(133) HW-25166 Quarterly Report, April through June, 1952, Chemical Research Section. O. F. Hill. 7-28-52.

(134) HW-25273 Storage of Radioactive Aqueous Wastes from Purex Processes. A. M. Platt and J. T. Krieg. 8-1-52.

(135) HW-25617 Soft Gamma/Beta Determination. J. S. Reddie. 9-5-52.

(136) HW-25911 Preliminary Metal Ion Distribution Studies in Redox and Uranium Recovery Process Systems. H. H. Hopkins, et al. 10-13-52.

(137) HW-26104 Quarterly Report, July through September, 1952, Chemical Research Section. O. F. Hill. 11-3-52.

(138) HW-26459 The Valve Actuated Pulse Column, II: A Study of the Temperature Effect and Design Variables. L. L. Burger and L. H. Clark. 2-16-53.

(139) HW-26517 Nitration Reactions of Shell Spray Base under Purex Waste Recovery Process Conditions. R. M. Wagner. 12-5-52.

(140) HW-26937 Quarterly Report, October through December, 1952, Chemical Research Section. O. F. Hill. 1-26-53.

(141) HW-27122 Unusual Incident at Savannah River. R. E. Tomlinson. 2-5-53.

(142) HW-27277 Purex Chemical Flowsheet HW #2. R. E. Tomlinson and F. W. Woodfield. 2-25-53.

(143) HW-27492 Investigation of Experimental Characteristics of Purex Solvent Decomposition Products (Red Oil). R. M. Wagner. 3-17-53.

(144) HW-27727 Quarterly Progress Report, Chemistry Unit, January, February and March, 1953. A. H. Bushey. 4-30-53.

(145) HW-27807 The Vibrational Method for Measuring Dispersion and Disengaging Time and Its Application to the Study of Emulsion Problems. R. H. Moore and J. E. Mendel. 4-21-53.

(146) HW-28435 Trip Report: Visit to K.A.P.L. June 1 through June 4, 1953. C. G. McCormack. 6-15-53.

(147) HW-28634 Quarterly Progress Report, Chemistry Unit, April, May and June, 1953. A. H. Bushey. 7-3-53.

(148) HW-28690 Overconcentration in Initial Operation of Uranium Evaporator-321 Building. G. Sege. 7-10-53.

(149) HW-28799 Silica Gel Tail-End Treatment for Redox. R. J. Sloat. 8-17-53.

(150) HW-29619 Quarterly Progress Report, Chemistry Unit, July, August and September, 1953. A. H. Bushey. 11-16-53.

(151) HW-30153 Progress Report, Chemical Development Unit, December, 1954. F. W. Woodfield. 12-30-53.

(152) HW-30635 Quarterly Progress Report, Chemistry Unit, October, November and December, 1953. A. H. Bushey. 2-1-54.

(153) HW-30643 The Determination of Dibutylphosphate, Rev. D.W. Brite. 10-15-54.

(154) HW-31350 Progress Report, Chemical Development Unit, March, 1954. F. W. Woodfield. 3-31-54.

(155) HW-31373 Purex Chemical Flowsheet HW #3. R. E. Smith. 4-6-54.

(156) HW-31630 Quarterly Progress Report, Chemistry Unit, January, February and March, 1954. A. H. Bushey. 5-1-54.

(157) HW-31757 Progress Report, Chemical Development Unit, April, 1954. F. W. Woodfield. 4-30-54.

(158) HW-31962 Pilot Plant Studies of Purex IOO Clarification by a 40-in. Bird Liquid-Liquid-Solid Centrifuge. J. T. Krieg. 5-7-54.

(159) HW-32716 Decontamination of Bismuth Phosphate Process First Cycle and Coating Removal Wastes (Interim Report). R. E. Burns. 8-10-54.

(160) HW-32781 Quarterly Progress Report, Chemistry Unit, April, May and June, 1954. W. H. Reas. 8-17-54.

(161) HW-33053 Effect of Solvent Saturation on Decontamination in the Purex HA Extraction-Scrub System. W. H. Adams, et al. 9-14-54.

(162) HW-33184 $BiPO_4$ Plant Nickel Ferrocyanide Scavenging Flowsheet for First-Cycle Waste Containing No Coating Removal Waste. E. A. Coppinger and R. E. Smith. 9-30-54.

(163) HW-33296 Path of UX in Purex Process. W. H. Adams, et al. October, 1954.

(164) HW-33496 Quarterly Progress Report, Chemistry Unit, July, August and September, 1954. W. H. Reas. 12-13-54.

(165) HW-33682 Partition of Dibutyl Phosphate. L. L. Burger. 11-8-54.

(165a) HW-34501 Chemical Stability of Purex and Uranium Recovery Process Solvent. R. H. Moore. 2-2-55.

(166) HW-34832 Progress Report, Chemical Development Sub-Section, January, 1955. F. W. Woodfield. 1-31-55.

(166a) HW-35225 Increased Purex Plant Capacity; Purex Chemical Flowsheet HW #4. R. J. Sloat and R. E. Smith. 3-4-55.

(167) ISC-234 Recovery of Tributyl Phosphate Solvent Employed in the Extraction Separation of Hafnium and Zirconium. W. R. Millard and R. P. Cox. Ames Laboratory. Undated.

(168) ISC-415 Purification of Thorium by Solvent Extraction. M. E. Whatley, et al. Ames Laboratory. July, 1953.

(169) K-706 Some Factors Influencing the Use of Tributyl Phosphate for the Extraction of Uranium in Analysis. T. W. Bartlett. 2-27-51.

(170) KAPL-89 Sulfamic Acid in the Redox Process. E. L. Zebroski and R. C. Feber. 7-15-48.

(171) KAPL-296 Progress Report No. 42, January 1950, Section I, Separation Processes. KAPL Staff. 2-23-50.

(172) KAPL-314 A Survey of Developments in Plutonium Process Chemistry for 1948-1949. H. W. Alter and E. L. Zebroski. 3-17-50.

(173) KAPL-461 Progress Report for November and December, 1950, January, 1951, Separations Processes. KAPL Staff. 3-19-51.

(174) KAPL-523 Progress Report, February, March and April, 1951, Separations Processes; Volume I. KAPL Staff. Undated.

(175) KAPL-602 Equilibrium Data for Purex Systems. J. W. Codding, W. O. Haas, and F. K. Henmann. 11-26-51.

(176) KAPL-747 Report of the Chemistry and Chemical Engineering Section for February, March, and April, 1952. KAPL Staff. 7-31-52.

(177) KAPL-794 Report of the Chemistry and Chemical Engineering Section for May, June, and July, 1952. KAPL Staff. 9-10-52.

(178) KAPL-826 Report of the Chemistry and Chemical Engineering Section for August, September, and October, 1952. 10-52.

(179) KAPL-834 Determination of the Specific Heats of Some Purex Solvents and Diluents. A. Dreeben. 10-18-52.

(180) KAPL-858 Report of the Chemistry and Chemical Engineering Section for November, December, 1952 and January, 1953. KAPL Staff. 3-24-53.

(181) KAPL-914 Report of the Chemistry and Chemical Engineering Section for Feb., March, and April, 1953. KAPL Staff. 7-23-53.

(182) KAPL-959 Report of the Chemistry and Chemical Engineering Section for May, June, and July, 1953. KAPL Staff. 9-25-53.

(183) KAPL-1002 Report of the Chemistry and Chemical Engineering Section for August, September and October, 1953. KAPL Staff. 1-11-54.

(184) KAPL-1069 Report of the Chemistry and Chemical Engineering Section for November, December, 1953 and January 1954. 1-54.

(185) IRL-115 The Extraction of Zirconium (IV) by Tributyl Phosphate. E. W. Murbach and W. H. McVey. Livermore Research Laboratory. Calif. Research and Development Co. April, 1954.

(186) NYO-2017 The Densities of Tributyl Phosphate-Kerosene-Uranium-Nitric Acid Solutions from 30-70°C. G. C. Petretic, A. R. Eberle, and R. Beaumont, New Brunswick Laboratory. 5-4-51.

(187) NYO-2021 Progress Report for the Period Ending June 30, 1951. C. J. Rodden. Undated.

(188) NYO-2024 Quarterly Progress Report for the Period Ending December, 1951. C. J. Rodden. May, 1952.

(189) NYO-5161 $UO_2(NO_3)_2$-HNO_3-H_2O Boiling Point Diagram. E. Dodge and A. E. Ruehle, Mallinckrodt Chemical Works. January, 1946.

(190) ORNL-260 Tributyl Phosphate Solvent Extraction of Uranium from Metal Waste - Laboratory Investigation. D. E. Ferguson and T. C. Runion. 10-7-49.

(191) ORNL-268 Progress Report for Quarter Ending May 31, 1949, Technical Division. W. K. Eister. 10-21-49.

(192) ORNL-557 TBP Process for Uranium Recovery from Metal Waste, Laboratory Summary. T. C. Runion and C. V. Ellison. 1-18-50.

(193) ORNL-580 Progress Report for Month Ending December 31, 1949, Technical Division. W. K. Eister. 2-9-50.

(194) ORNL-708 Progress Report for Month Ending March, 1950, Chemical Technology Division. W. K. Eister. 6-19-50.

(195) ORNL-717 Purex Process Laboratory Development. W. B. Lanham and A. T. Gresky. 6-15-50.

(196) ORNL-721 Progress Report for Month of April, 1950, Chemical Technology Division. W. K. Eister. 6-27-50.

(197) ORNL-743 Application of the Purex Process to ORNL Metal Waste Recovery. T. C. Runion and C. V. Ellison. 8-24-50.

(198) ORNL-763 Quarterly Progress Report for Period Ending May 31, 1950, Chemical Technology Division. W. K. Eister. 7-26-50.

(199) ORNL-795 Quarterly Progress Report for Period Ending June 30, 1950, Chemistry Division. J. A. Swartout. 10-3-50.

(200) ORNL-797 The Uranyl Nitrate - Water System above 60°C. W. L. Marshall and J. S. Gill. 9-18-50.

(201) ORNL-801 Tributyl Phosphate as an Alternate Solvent for Extraction of "25" Spent MTR Fuel Assemblies. T. C. Runion. 9-26-50.

(202) ORNL-880 Summary Report of the ORNL Pilot Plant Program for the Recovery of Plutonium from Chalk River and Hanford Fuel Rods. A. T. Gresky and N. T. Rigstad. 3-21-51.

(203) ORNL-936 Quarterly Progress Report for Period Ending November 20, 1950, Chemical Technology Division. W. K. Eister. 1-31-51. Pp. 17, 19.

(204) ORNL-1061 Quarterly Progress Report for Period Ending May 20, 1951, Chemical Technology Division. W. K. Eister. 9-24-51.

(205) ORNL-1138 The Hydrolysis of Tributyl Phosphate and Its Effect on the Purex Process. V. J. Reilly. 11-14-51.

(206) ORNL-1141 Progress Report for Period Ending August 20, 1951, Chemical Technology Division. W. K. Eister. 3-26-52.

(207) ORNL-1280 Quarterly Progress Report for Period Ending March 15, 1952, Homogeneous Reactor Project, Chemical Processing Section. F. R. Bruce and D. E. Ferguson. 5-17-52.

(208) ORNL-1311 Progress Report, August 1, 1951 - February 10, 1952, Chemical Technology Division. F. L. Steahly. 10-13-52.

(209) ORNL-1343 Progress Report: Purex Process Laboratory Development, February through April, 1952. J. R. Flanary, et al. 10-9-52.

(210) ORNL-1357 An Ion-Exchange Process for Plutonium Isolation and Purification. D. C. Overholt, et al. 10-1-52.

(211) ORNL-1364 An Ion-Exchange Process for U^{235} Isolation and Purification. D. C. Overholt. 10-4-52.

(212) ORNL-1367 Progress Report on Laboratory Development of the Thorex Process. A. T. Gresky, et al. 1-2-53.

(213) ORNL-1397 Progress Report: Ion Exchange Isolation Process for Plutonium and U^{233}. D. C. Overholt. 12-20-52.

(214) ORNL-1424 Quarterly Progress Report for Period Ending October 1, 1952, Homogeneous Reactor Project. W. E. Thompson. 1-10-53.

(215) ORNL-1431 Progress Report, September 30, 1952, Laboratory Development of the Thorex Process. A. T. Gresky, et al. 4-6-53.

(216) ORNL-1448 Quarterly Progress Report for Period Ending November 20, 1952, Chemical Technology Division. Author not stated. 2-11-53.

(217) ORNL-1449 Progress Report: Ion Exchange Isolation Processes for Plutonium and U^{233}. D. C. Overholt, et al. 3-30-53.

(218) ORNL-1478 Quarterly Progress Report for Period Ending January 1, 1953, Homogeneous Reactor Project. W. E. Thompson. 3-3-53.

(219) ORNL-1481 Progress Report, May through July, 1952, Purex Process Laboratory Development. J. R. Flanary, et al. 4-20-53.

(220) ORNL-1519 Terminal Report for the ORNL Pilot Plant Investigation of the Purex Flowsheet. J. M. Chandler and D. O. Darby. 2-5-54.

(221) ORNL-1520 Progress Report No. III: Ion Exchange Isolation Processes for Plutonium and Uranium. D. C. Overholt, et al. 5-6-53.

(222) ORNL-1548 Progress Report, August, 1952 through January, 1953, Purex Process Laboratory Development. J. R. Flanary, et al. 7-30-53.

(223) ORNL-1585 Progress Report No. IV: Ion Exchange Isolation Processes for Plutonium and Uranium. D. C. Overholt, et al. 10-23-53.

(224) ORNL-1610 Progress Report, February 1, 1953 to July 31, 1953, Laboratory Development of the Thorex Process. A. T. Gresky, et al. 4-22-54.

(225) ORNL-1697 Development of the Amex Process for Americium Recovery. R. H. Rainey. 5-21-54.

(226) FDB-116 The Crystallization Temperatures of Uranyl Nitrate-Nitric Acid Solutions. R. G. Hart. Chalk River Project (Canada). 3-10-54.

(227) TID-259 Radiological Warfare Program Status Report. W. H. Baldwin, et al. 10-9-49.

(228) TID-2010 Reactor Science and Technology, Volume 3, No. 3. "Ion Exchange Processes for Plutonium and U^{233} Isolation." D. C. Overholt. Sept., 1953. Pp. 9-18.

(229) TID-2012 Reactor Science and Technology, Volume 4, No. 1. "The Purex Process at Oak Ridge National Laboratory." J. R. Flanary. March, 1954. Pp. 9-26.

(230) TID-2012 Reactor Science and Technology, Volume 4, No. 1. "The Purex Process at Knolls Atomic Power Laboratory." E. L. Zebroski and W. O. Haas. March, 1954. Pp. 37-64.

(231) TID-5110 Report of Visit to the Atomic Energy Research Establishment, Harwell, England. J. F. Flagg. March, 1953.

(232) UCRL-1013 Liquid-Liquid Extraction. M. W. Davis, Jr., et al. Radiation Laboratory, University of California. January, 1951.

LIST OF TABLES AND FIGURES

TABLE IV-1	PHYSICAL PROPERTIES OF NORMAL BUTYL PHOSPHATES
TABLE IV-2	PROPERTIES OF DILUENTS
TABLE IV-3	COMPOSITION AND PHYSICAL PROPERTIES OF AQUEOUS WASTE STREAMS
TABLE IV-4	DISPERSION AND DISENGAGING TIMES
TABLE IV-5	DISTRIBUTION OF FISSION PRODUCTS - Effect of Complexing Agents
FIGURE IV-1	TBP HYDROLYSIS RATE
FIGURE IV-2	BOILING RANGES OF DILUENTS - A.S.T.M. Distillations
FIGURE IV-3	VAPOR PRESSURE OF TBP AND DILUENT - Effect of Temperature
FIGURE IV-4	DENSITY NOMOGRAPH FOR SOLVENT-PHASE SOLUTIONS
FIGURE IV-5	SOLUBILITY OF TBP IN AQUEOUS PHASE - Effect of TBP, Nitric Acid, and Uranyl Nitrate Concentrations
FIGURE IV-6	AQUEOUS URANIUM SOLUTIONS - Conversion from Moles Per Liter to Weight Per Cent
FIGURE IV-7	SOLUBILITY OF URANYL NITRATE - Effect of Nitric Acid Concentration
FIGURE IV-8	DENSITY OF URANYL NITRATE SOLUTIONS - Effect of Nitric Acid Concentration
FIGURE IV-9	DENSITY OF URANYL NITRATE SOLUTIONS AT THE BOILING POINT - Effect of HNO_3 Concentration
FIGURE IV-10	HYDROGEN ION CONCENTRATION - $UO_2(NO_3)_2$-HNO_3-H_2O System
FIGURE IV-11	BOILING POINT ISOTHERMS OF THE SYSTEM $UO_2(NO_3)_2$-HNO_3-H_2O
FIGURE IV-12	SPECIFIC HEAT AND REFRACTIVE INDEX OF URANYL NITRATE SOLUTIONS
FIGURE IV-13	INTERFACIAL TENSION OF TBP-AMSCO 125-90W AGAINST AQUEOUS SOLUTIONS - Effect of UNH and HNO_3
FIGURE IV-14	DISTRIBUTION OF URANIUM - Effect of Uranium Concentration - Dilute Range
FIGURE IV-15	DISTRIBUTION OF URANIUM - Effect of Uranium Concentration - Concentrated Range

FIGURE IV-16 DISTRIBUTION OF URANIUM - Effect of TBP Concentration

FIGURE IV-17 DISTRIBUTION OF URANIUM - Effect of Temperature

FIGURE IV-18 URANIUM EQUILIBRIUM DIAGRAM - Arithmetic Coordinates

FIGURE IV-19 URANIUM EQUILIBRIUM DIAGRAM - Logarithmic Coordinates

FIGURE IV-20 DISTRIBUTION OF PLUTONIUM - Effects of Valence State and of Nitric Acid Concentration

FIGURE IV-21 DISTRIBUTION OF Pu(III) AND Pu(IV) - Effect of Total Nitrate Concentration

FIGURE IV-22 DISTRIBUTION OF PLUTONIUM - Effect of TBP Concentration

FIGURE IV-23 DISTRIBUTION OF FISSION PRODUCTS - Effect of Organic-Phase Uranium Saturation

FIGURE IV-24 DISTRIBUTION OF FISSION PRODUCTS IN ABSENCE OF URANIUM - Effect of Nitric Acid Concentration

FIGURE IV-25 DISTRIBUTION OF PLUTONIUM AND FISSION PRODUCTS IN PRESENCE OF URANIUM - Effect of Nitric Acid Concentration

FIGURE IV-26 DISTRIBUTION OF FISSION PRODUCTS - Effect of TBP Concentration

FIGURE IV-27 DISTRIBUTION OF NITRIC ACID - Effects of UNH and HNO_3 Concentrations

FIGURE IV-28 DISTRIBUTION OF NITRIC ACID - Effect of Organic-Phase Uranium Saturation

FIGURE IV-29 DISTRIBUTION OF NITRIC ACID - Effect of Temperature

FIGURE IV-30 DISTRIBUTION OF NEPTUNIUM, UX_1, AND UX_2 - Effect of Nitric Acid Concentration

TABLE IV-1

PHYSICAL PROPERTIES OF NORMAL BUTYL PHOSPHATES

Sources of Data: HW-15079, HW-15172, HW-17822, HW-18880, HW-19959, AERE-CE/M-19, and ANL-5242

	Tributyl Phosphate (TBP)	Dibutyl Phosphate (DBP)	Monobutyl Phosphate (MBP)
Formula	$(n\text{-}C_4H_9O)_3PO$	$(n\text{-}C_4H_9O)_2(OH)PO$	$(n\text{-}C_4H_9O)(OH)_2PO$
Molecular weight	266.32	210.2	154.1
Color	Colorless	Pale yellow	Colorless
Odor	Mildly sweet	--	--
Density, g./ml. at 25° C.	0.9730	1.065	1.220
Refractive index, n_D^{20}	1.4245	1.4260	1.419
Refractive index, n_D^{25}	1.4226	1.4277	1.429
Melting point, °C.	< -80	--	--
Specific heat, cal./(g.)(°C.) at 25°C.	0.41	--	--
Latent heat of vaporization, cal./gram-mole	14,680	--	11,400
Boiling point, °C. at 760 mm. Hg pressure	289	190[a]	105[a]
Boiling point, °C. at 25 mm. Hg pressure	177	--	--
Boiling point, °C. at 1 mm. Hg pressure	121	--	--
Vapor pressure, mm. Hg at 100° C.	ca. 1.0	--	--
Vapor pressure, mm. Hg at 25° C.	0.006	--	--
Flash point, °F. (Tag closed cup)	295 (146°C.)	--	--
Viscosity, millipoises at 30°C., 25°C., 20°C.	29.5, 33.2, 37.4	520 (25°C.)	4300 (25°C.)
Viscosity, Saybolt seconds at 85°F.	38.6	--	--
Solubility in water, g./l. at 25°C.	0.39	18	--
Solubility in water, volume per cent	0.6	--	--
Solubility of water in butyl phosphate, g./l. at 25° C.	64	79	--
Solubility of water in butyl phosphate, volume per cent	7	--	--
Surface tension, dynes/cm. at 25°C.	25	--	--
Dielectric constant at 30°C.	7.97	--	--

Note:

(a) Decomposition temperature.

TABLE IV-2

PROPERTIES OF DILUENTS[a]

Diluent	Density at 25°C., G./Ml.	Index of Refraction, n_D^{25}	Viscosity at 25°C., Millipoises	Boiling Range and Mid-Point, °C.	Flash Point Tag Closed Cup, °F.	Aromatic Content, Vol. %	Naphthene Content, Vol. %	Iodine Number	Specific Heat at 25°C., Cal./(G.)(°C.)	References
Soltrol - 170[c]	0.7728	1.4315	---	208-239, (225)	192	Nil	Nil	≤1.1[e]	---	Phillips Chemical Co.
Soltrol - 170[d]	0.7764	1.4289	22.9	214-235, (225)	183	---	---	<1 [e]	---	L. L. Burger, Memo 9-1-54.
Shell Deodorized Spray Base	0.8038	1.4435	19.0	193-260, (232)	150	<1.0	20 to 30	0.42	---	HW-19065
Shell E-2342	0.801	---	16.8	---	166	0.1	ca. 80	---	---	R. F. Maness, Memo, 3-31-53.
Decbase	0.7804	1.4344	17.3	198-269, (225)	162	<1.0	---	0.02	---	HW-19065
Amsco 125-90W	0.7570	1.4226	14.1	186-199, (190)	133	<1.0	---	0.49	---	HW-19065
Amsco 123-15N	0.7879	---	11.4	187-204, (191)	143	11	---	---	0.48	KAPL-858
Ultrasene	0.776	---	15.7	200-250	164 (196)[b]	---	---	---	---	KAPL-858
Gulf BT "Varsol"	0.7606	1.4271	8.9	165-198, (177)	111	9.1	---	1.07	0.45	HW-19065
Dodecane ($C_{12}H_{26}$)	0.746	1.419	14.0	216	165	---	---	---	---	HW-19065

Notes:

(a) The properties of commercial diluents are subject to slight variations from batch to batch. The data tabulated represent typical values for the indicated diluents.

(b) After washing with water. The Cleveland Closed Cup Flash Point is 183° F.

(c) Properties as cited by manufacturer. (See Note (a)).

(d) Properties as determined on one sample at H.A.P.O. (See Note (a)).

(e) Bromine number.

TABLE IV-3

COMPOSITION AND PHYSICAL PROPERTIES OF AQUEOUS WASTE STREAMS

(Approximate)

Waste Stream	Solute Concentrations[f], Moles/Liter										Specific Gravity (25°/4°C.)	Boiling Point, °C.	Specific Heat at 25°C.	Remarks
	HNO_3	$NaNO_3$	Na_2SO_4	$Fe_2(SO_4)_3$	NaOH	$NaAlO_2$	Na_2SiO_3	$Na_2U_2O_7$	$NaNO_2$	$Fe(OH)_3$				
1WW	7.6	0.38	0.052	0.054	---	---	---	---	---	---	1.24 (115°C.)	110	0.772	(a)
	6.9	0.09	---	---	---	---	---	---	---	---	1.207	108	0.792	(b)
	7.0	0.38	0.06	0.05	---	---	---	---	---	---	1.24	108.5	0.788	(c)
	7.7	0.22	0.17	0.06	---	---	---	---	---	---	1.29	110	0.770	(d)
2WW	7.7	0.30	0.052	0.054	---	---	---	---	---	---	1.24 (115°C.)	110	0.770	(a)
	8.0	0.30	Trace	0.03	---	---	---	---	---	---	1.25	110.5	0.765	(b)
	7.9	0.28	0.06	0.05	---	---	---	---	---	---	1.25	110.5	0.768	(c)
	8.2	0.12	0.17	0.06	---	---	---	---	---	---	1.30	111	0.760	(d)
Coating Waste	---	0.6	---	---	1.0	1.2	0.02	---	0.9	---	1.19	101	---	(c)
	---	0.8	---	---	1.2	1.5	0.03	---	1.1	---	1.23	101	---	(d)
Neutralized Waste	---	2.5	0.08	---	0.23	---	---	0.015	---	0.04	1.10	102	0.94	(a)
	---	2.20	0.08	---	0.30	---	---	0.02	---	0.04	1.15	102	0.95	(b)
	---	2.80	0.08	---	0.30	---	---	0.01	---	0.04	1.17	102	0.93	(c)
	---	4.50	0.20	---	0.21	---	---	0.01	---	0.07	1.25	---	0.89	(d)
Combined Coating and Neutralized Wastes	---	3.0	0.12	---	0.62	0.63	0.01	0.006	0.46	0.04	1.24	107	0.90	(e)

Notes:

(a) Purex Flowsheet HW #3 (HW-31373) with back-cycling of the 2WW to No. 1 Acid Concentrator.

(b) Purex Flowsheet HW #3 (HW-31373) without 2WW back-cycling.

(c) Purex Flowsheet HW #2 (HW-27277).

(d) Purex Flowsheet HW #1 (HW-24763).

(e) HW-26104.

(f) Excluding traces of phosphate present from hydrolysis of any unremoved TBP.

TABLE IV-4

DISPERSION AND DISENGAGING TIMES[a][b]

Source of Data: R. F. Maness, Unpublished Data.

Applicable Section of Purex Column[c]	Dispersion Time, Sec.[d]		Disengaging Time, Sec.[e]	
	Stainless Steel[f]	Kel-F[g]	Stainless Steel[f]	Kel-F[g]
HA - Middle of extraction section (Final aq.-phase U conc. ≅ 12 g./l.)	35	18	50	105
HA - Feed Point	15	2	50	108
HA - Top of scrub section	8	1	20	82
HC - Bottom	3	3	40	135
HC - Middle (Final org.-phase U conc. ≅ 15 g./l.)	3	7	30	131
HC - Top	3	2	20	330
2A - Top of scrub section	40	4	35	60
Bottom of extraction section	40	4	35	60
2B - Top	9	---	30	---
Bottom	9	---	30	---
HAX vs. H_2O (distilled)	3	---	78	---

Notes:

(a) Average values obtained by contacting 12.5 ml. of each phase in a 0.54-inch I.D. graduate with a pulse-type agitator. The agitator contains 5 stainless-steel or Kel-F sieve plates mounted 0.25-inch apart on a 0.125-inch-diameter stainless-steel shaft. The plates contain 0.030-inch holes on equilateral triangular spacing with 0.062 inch between centers. The agitator is moved up and down over a distance of 2.875 inches at a rate of 100 cyc./min.

(b) Values are for synthetic solutions made up to Purex Flowsheet HW #3 compositions, Shell E-2342 diluent. Mass transfer permitted to take place during dispersion test. Disengaging times are for essentially equilibrated liquids.

(c) Composition of both phases equivalent to the indicated section of the column.

(d) Time required to achieve constant dispersion. "Judgment factor" in determining when dispersion has ceased to change results in possible ±20% variation between investigators.

(e) Time required for dispersion after 2-min. agitation to settle to a 1-mm. mixed-phase thickness at the interface.

(f) Stainless-steel sieve plates, giving organic-in-aqueous phase dispersion.

(g) Kel-F sieve plates, gives aqueous-in-organic phase dispersion.

TABLE IV-5

DISTRIBUTION OF FISSION PRODUCTS
EFFECT OF COMPLEXING AGENTS

Source of Data: ANL-4530

HNO_3 Conc. in Aqueous Phase: 2.8 to 2.9 M Solvent: 10 volume per cent TBP in CCl_4

Complexing Agent	Uranium Concentration in the Solvent, Per Cent Saturation	10^4 x (Distribution Ratio), $\frac{G./L.\ Org.}{G./L.\ Aq.}$				
		Gross Beta	Gross Gamma	Zr	Ce	Ru
None	25	30	60	103	4.0	11
	42	18	41	67	1.9	7.2
	69	6.2	18.2	25	0.40	2.2
	84	3.7	11.2	13	0.16	1.3
0.01 M $K_2C_2O_4$	23	3.6	8.6		3.5	10
	43	3.2	4.6	1.10	2.90	10
	69	1.1	2.0	0.48	0.43	2.6
	75	0.61		0.38	0.063	1.5
0.01 M Na_2SiF_6	24	5.4	7.7	4.2	4.5	10
	45	4.1	5.3	3.0	3.5	7.7
	73	1.5	2.8	1.6	0.5	2.3
	85	1.1	3.7		0.2	2.7

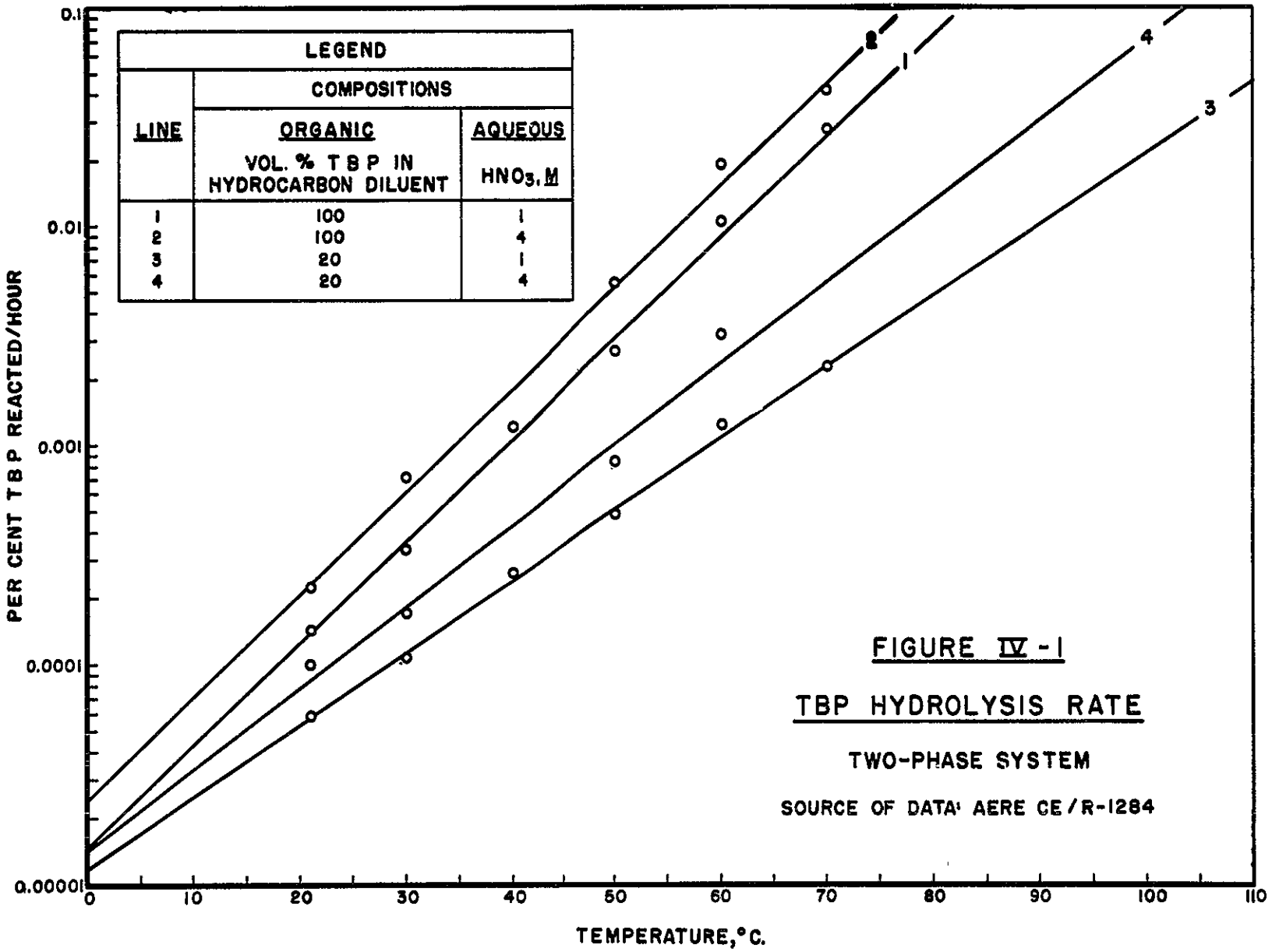

FIGURE IV-1

TBP HYDROLYSIS RATE

TWO-PHASE SYSTEM

SOURCE OF DATA: AERE CE/R-1284

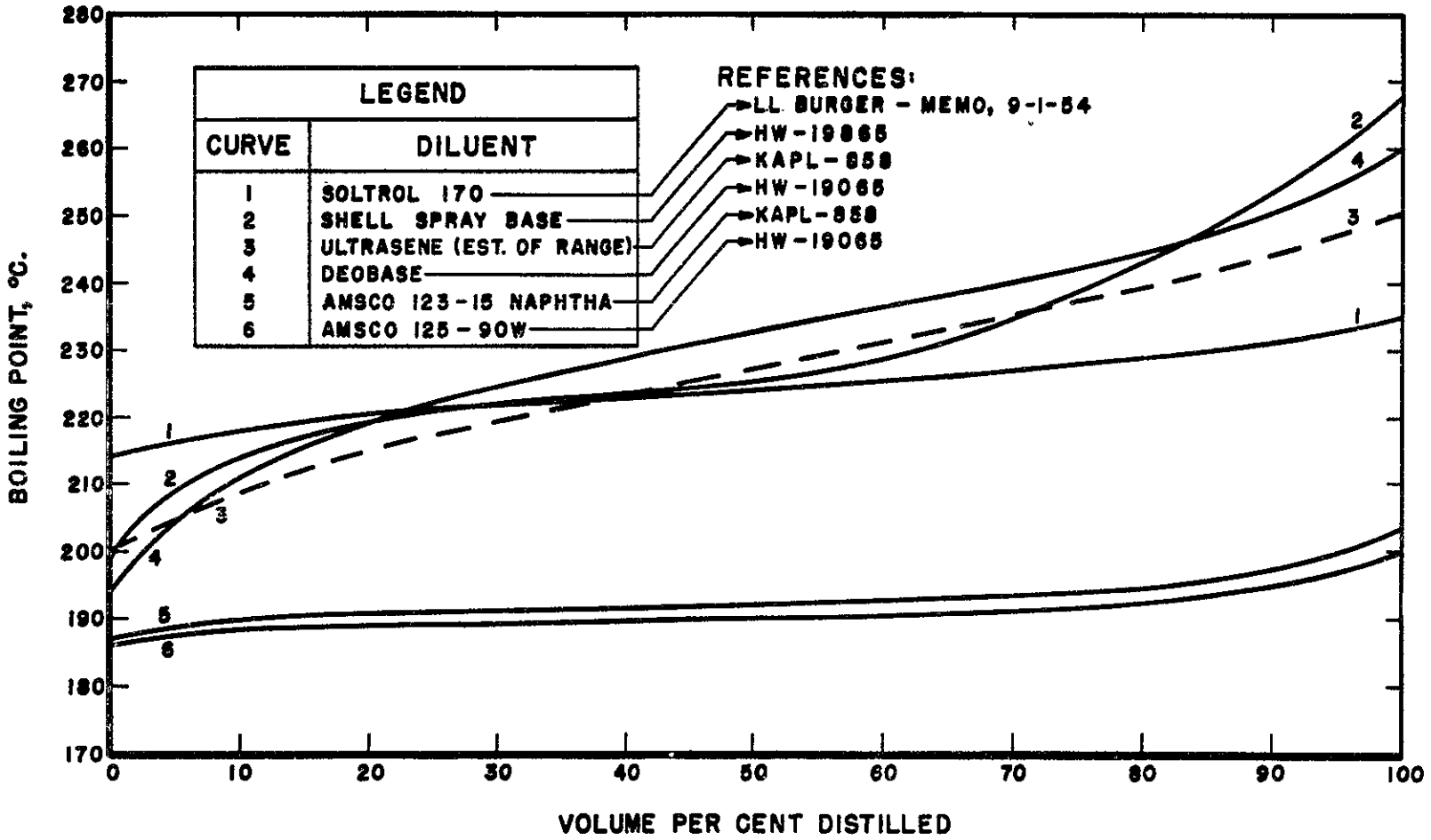

FIGURE IV-2

BOILING RANGES OF DILUENTS

A.S.T.M. DISTILLATIONS

FIGURE IV-3

VAPOR PRESSURE OF TBP AND DILUENT EFFECT OF TEMPERATURE

SOURCES OF DATA: HW-15172; L.L. BURGER UNPUBLISHED DATA, AUG. 1954

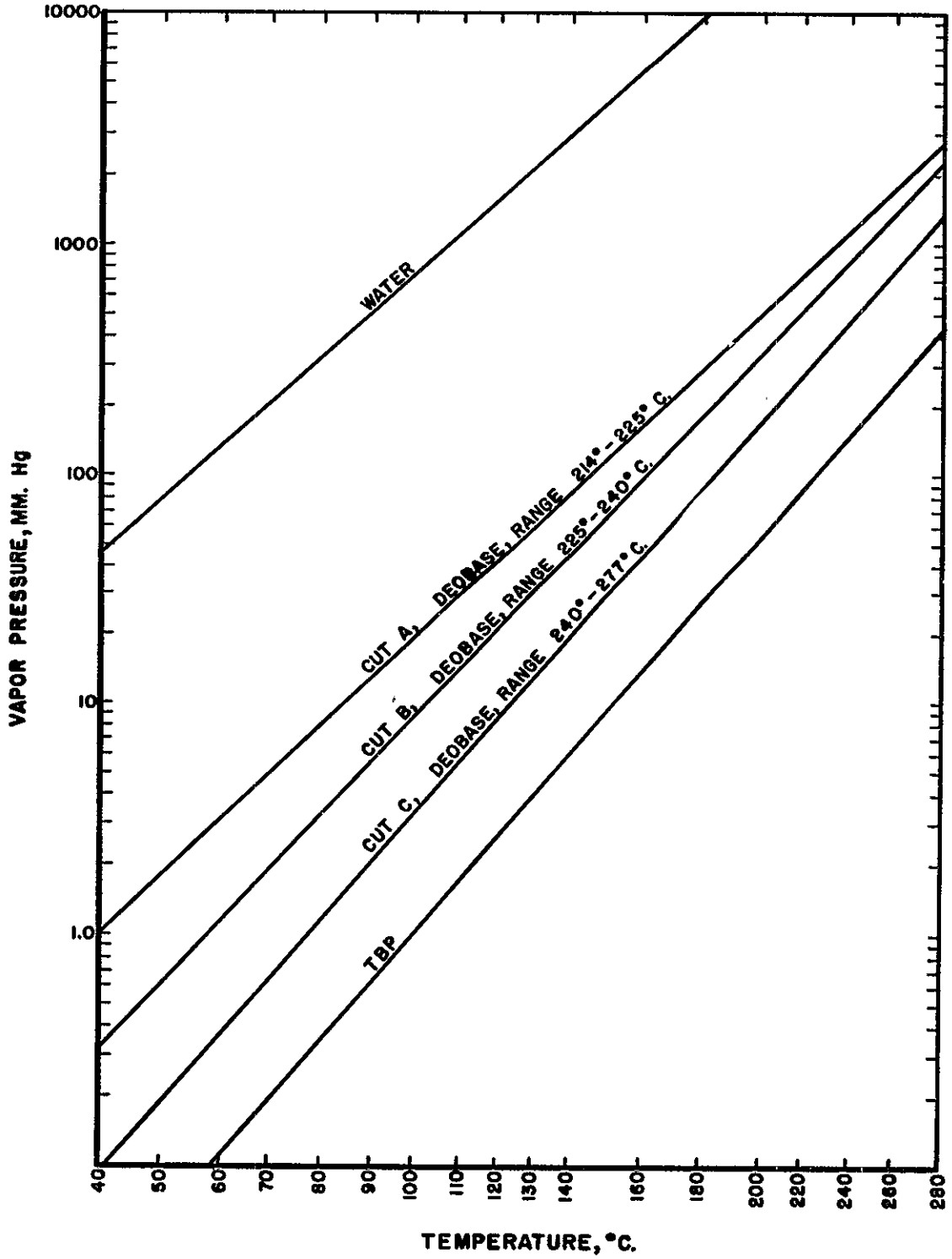

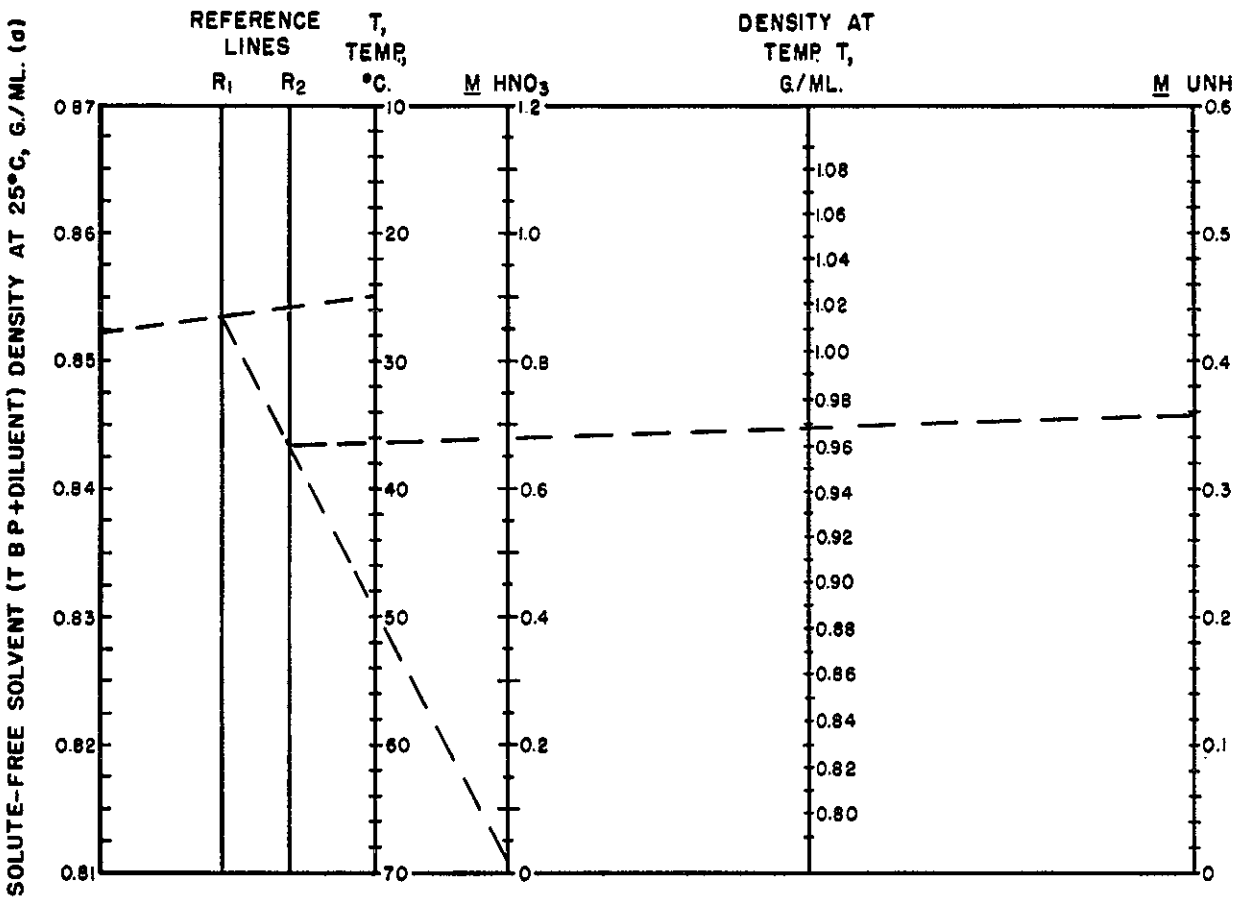

NOTE:

(a) SOLVENT DENSITY FOR LEFT-HAND LINE OF NOMOGRAPH IS OBTAINED FROM PLOT BELOW.

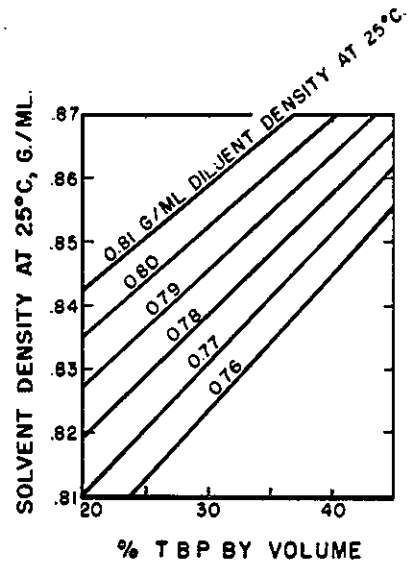

FIGURE IV-4

DENSITY NOMOGRAPH FOR SOLVENT-PHASE SOLUTIONS

SOURCE OF DATA: NYO-2017

FIGURE IV-5

SOLUBILITY OF TBP IN AQUEOUS PHASE

EFFECT OF TBP, NITRIC ACID, AND URANYL NITRATE CONCENTRATIONS

SOURCE OF DATA: AERE CE/R-1283

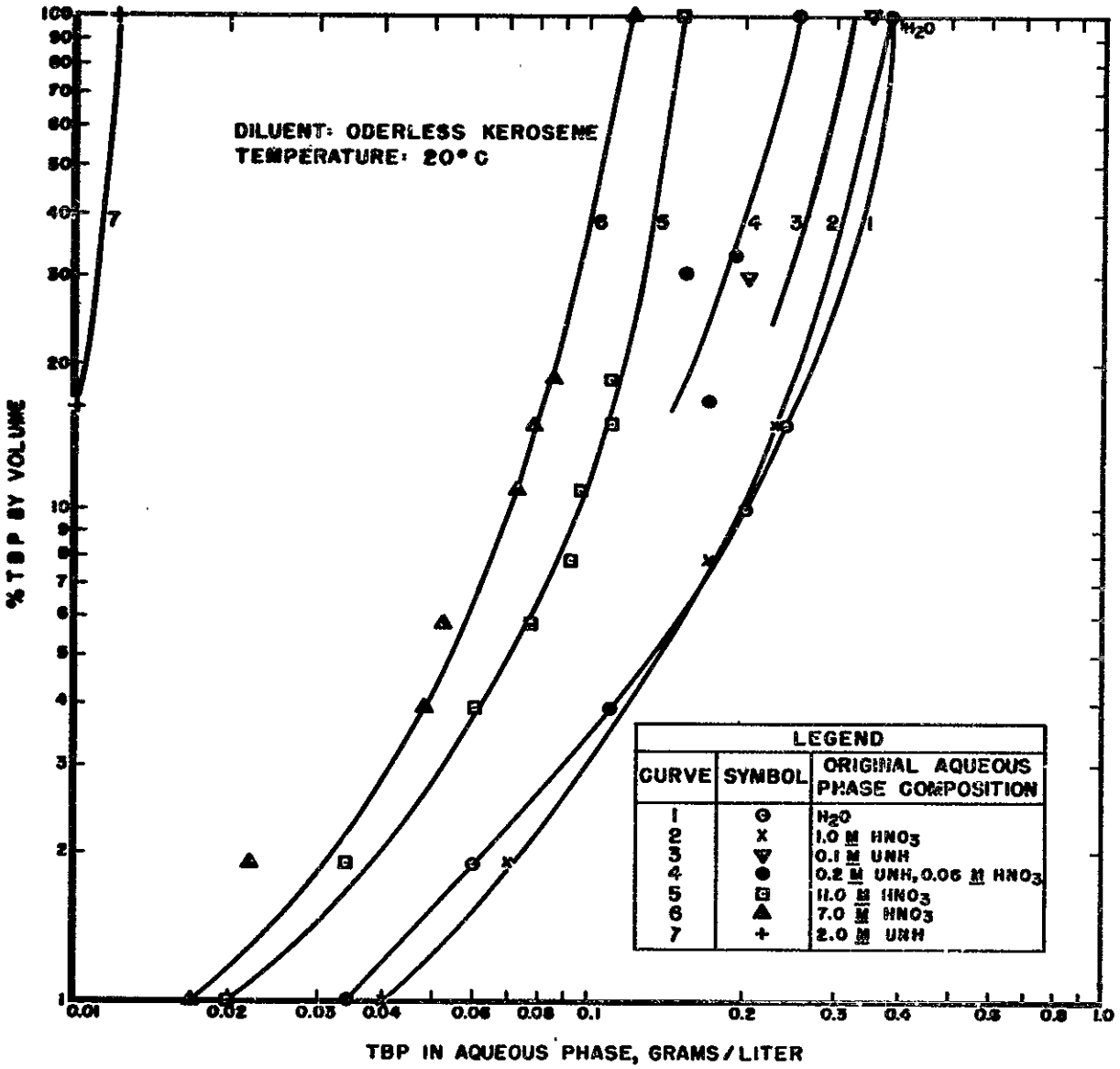

FIGURE IV-6

AQUEOUS URANIUM SOLUTIONS

CONVERSION FROM MOLES PER LITER TO WEIGHT PER CENT

SOURCE OF DATA: CL-697

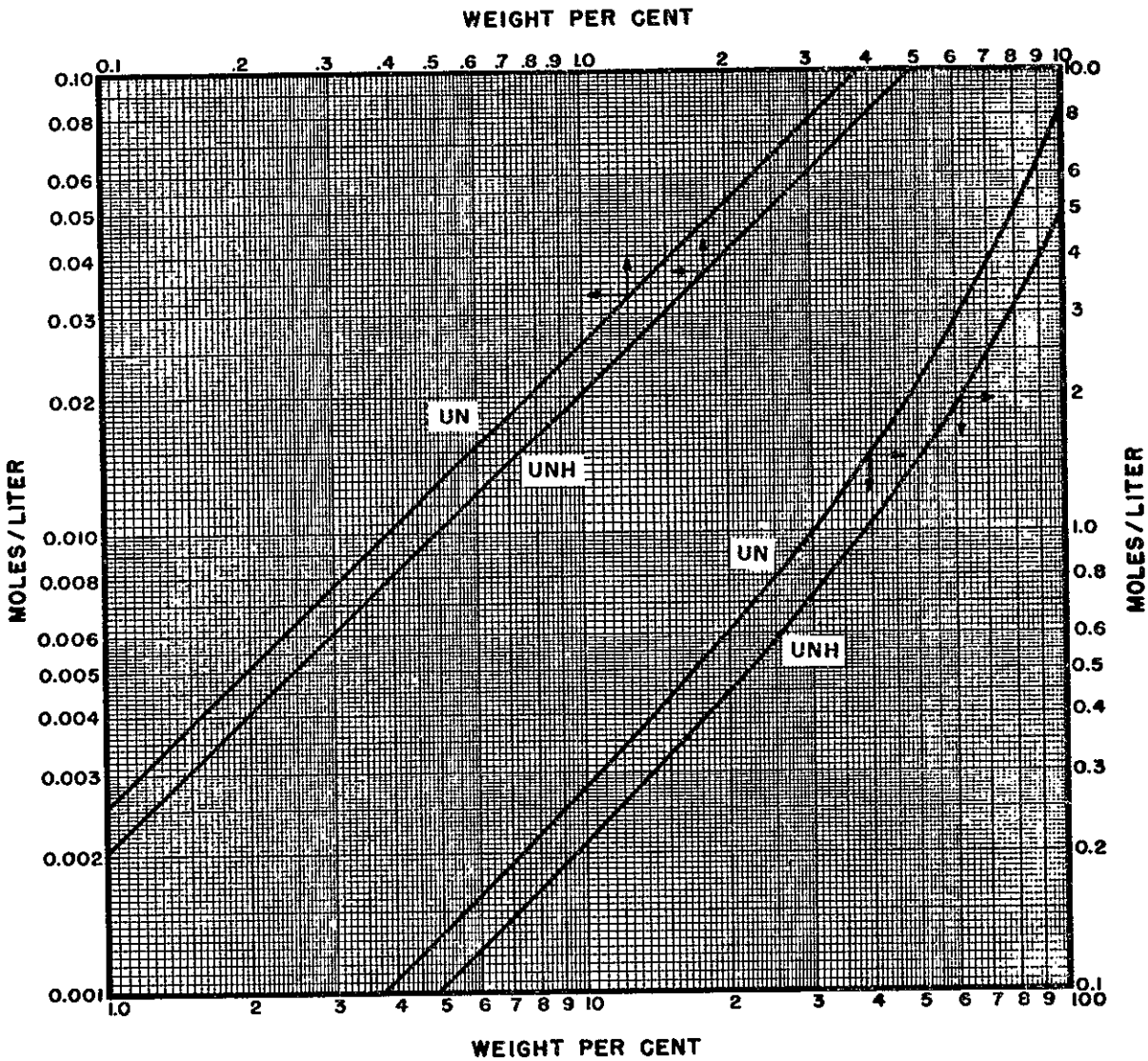

FIGURE IV-7

SOLUBILITY OF URANYL NITRATE

EFFECT OF NITRIC ACID CONCENTRATION

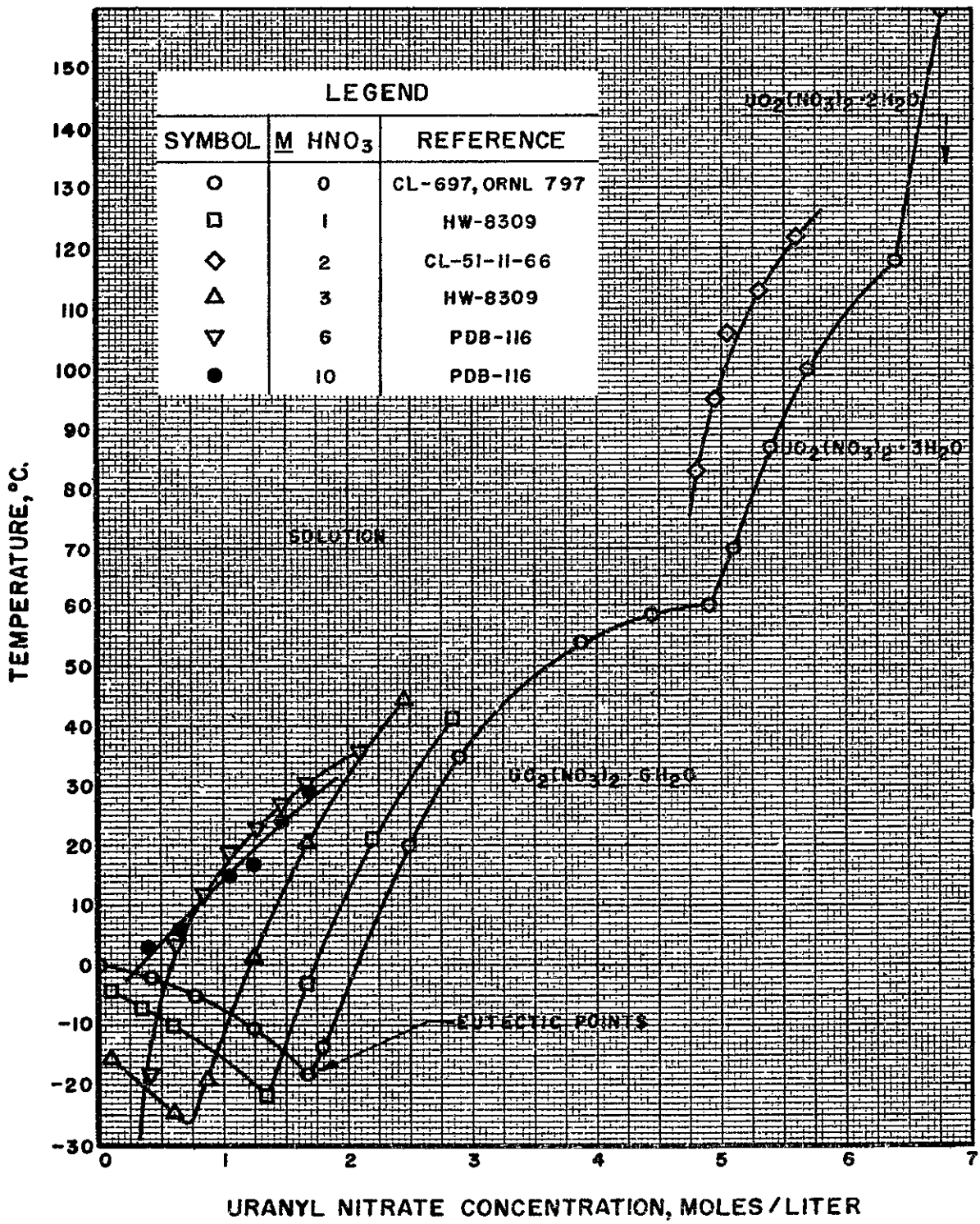

FIGURE IV-8

DENSITY OF URANYL NITRATE SOLUTIONS

EFFECT OF NITRIC ACID CONCENTRATION

SOURCE OF DATA: HW-11276

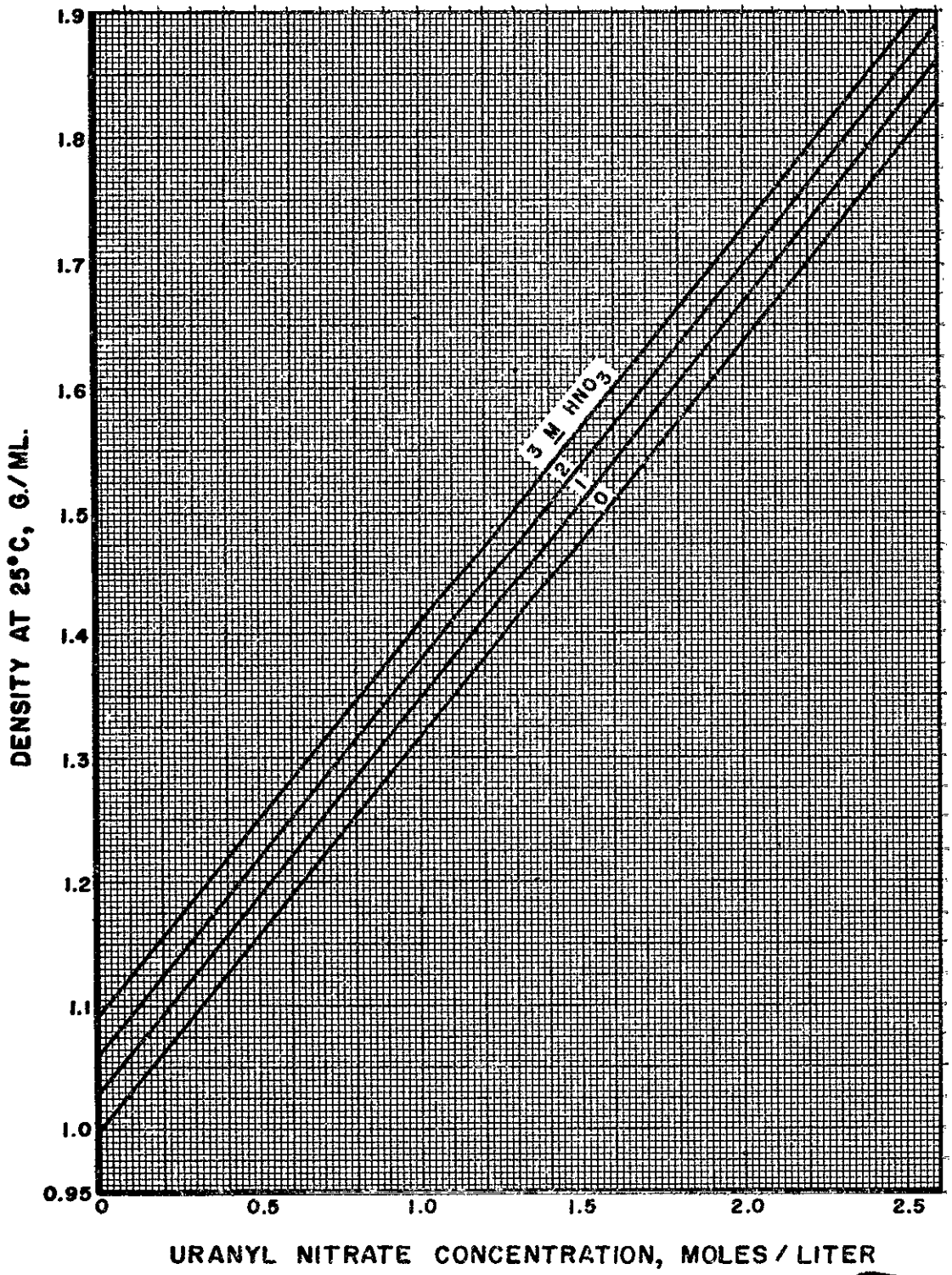

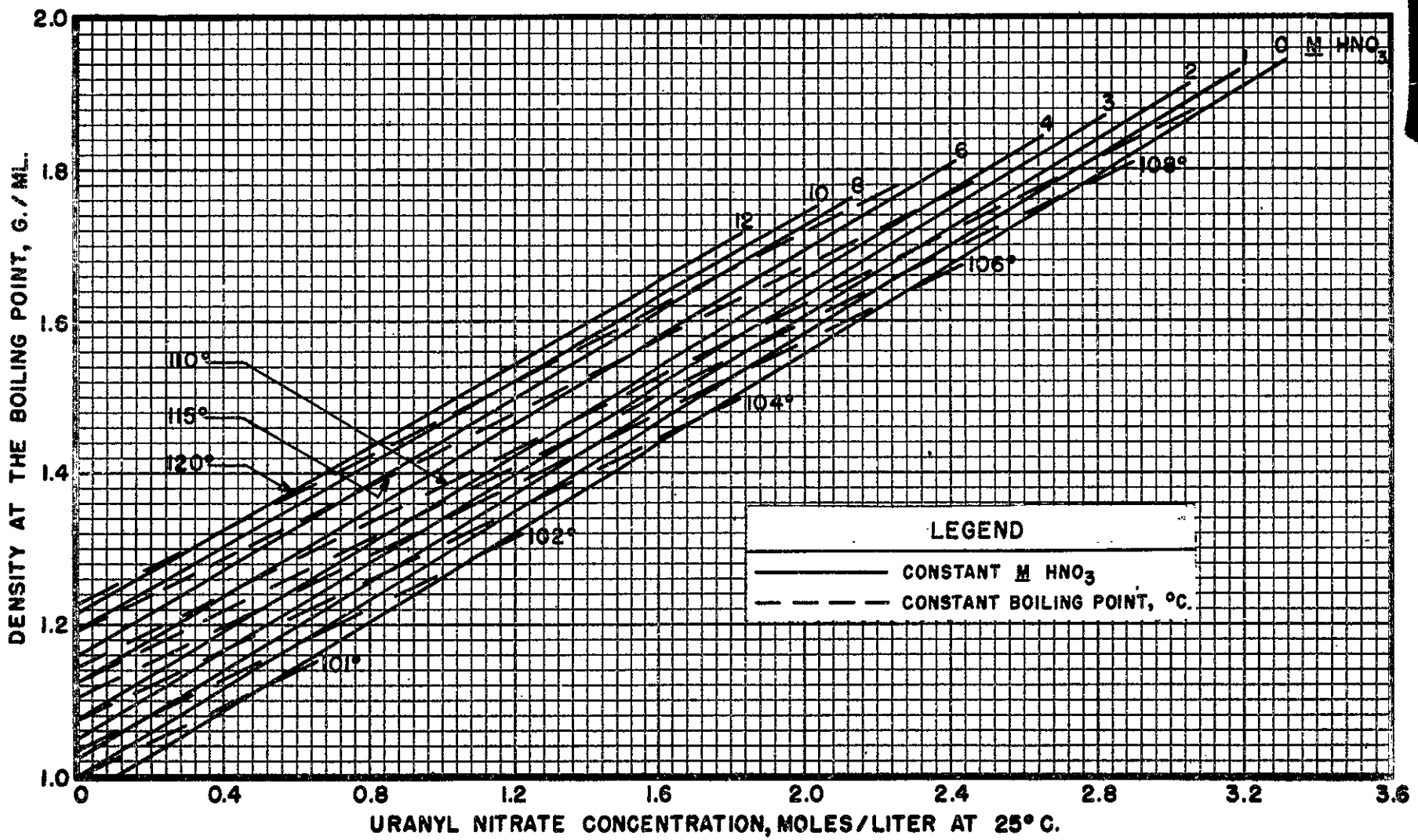

FIGURE IV-9

DENSITY OF URANYL NITRATE SOLUTIONS AT THE BOILING POINT

EFFECT OF HNO_3 CONCENTRATION

SOURCE OF DATA: CL-697

FIGURE IV-10

HYDROGEN ION CONCENTRATION

$UO_2(NO_3)_2 - HNO_3 - H_2O$ SYSTEM

SOURCE OF DATA: HW-14559

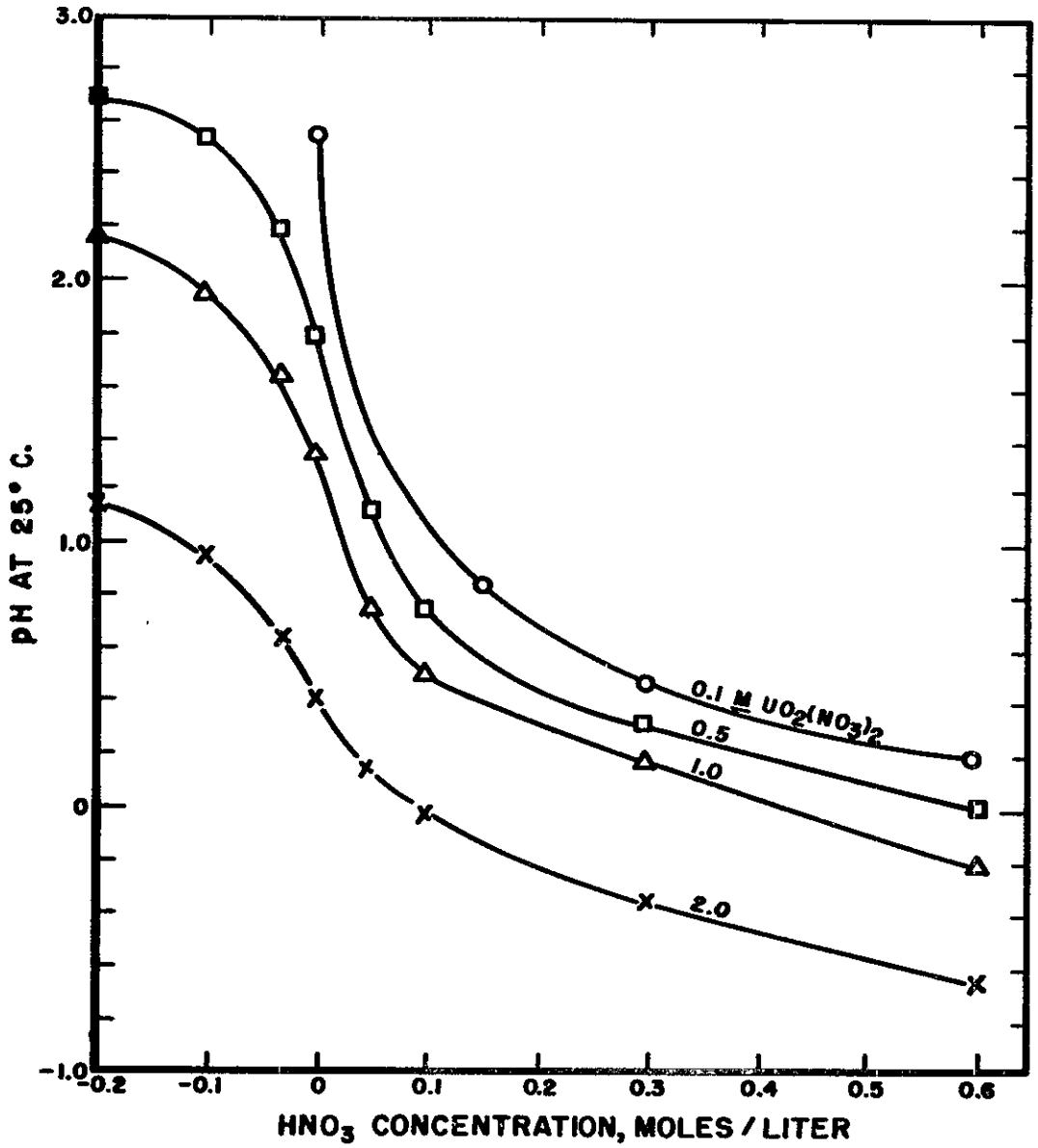

FIGURE IV-11

BOILING POINT ISOTHERMS

OF THE SYSTEM $UO_2(NO_3)_2$-HNO_3-H_2O

SOURCE OF DATA: NYO-5161 (HW-19932 NEAR DENITRATION)

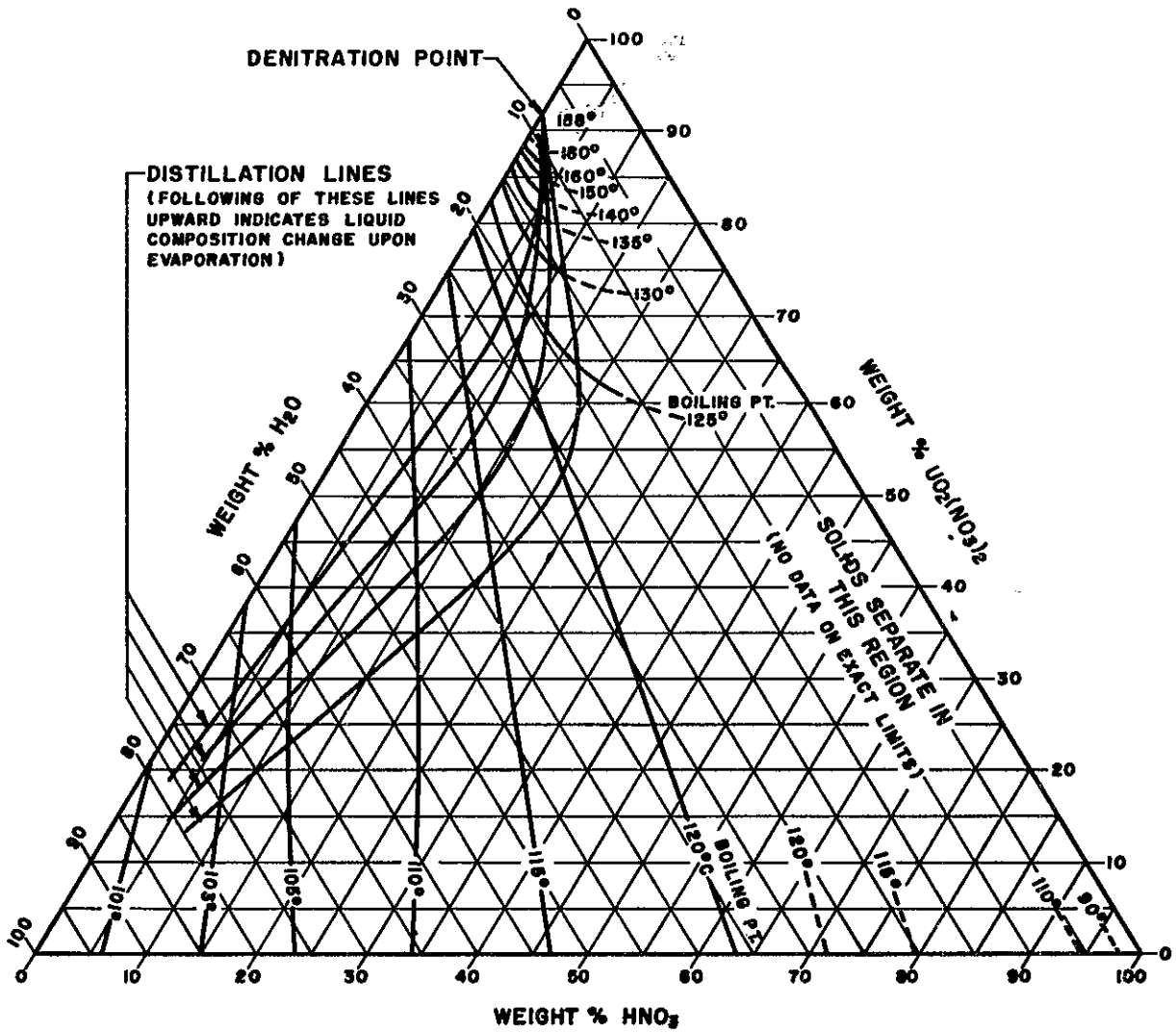

FIGURE IV-12

SPECIFIC HEAT AND REFRACTIVE INDEX OF URANYL NITRATE SOLUTIONS

SOURCE OF DATA: UNPUBLISHED DATA, C.M. SLANSKY, OCTOBER 1948; CL-697, (FOR R.I.)

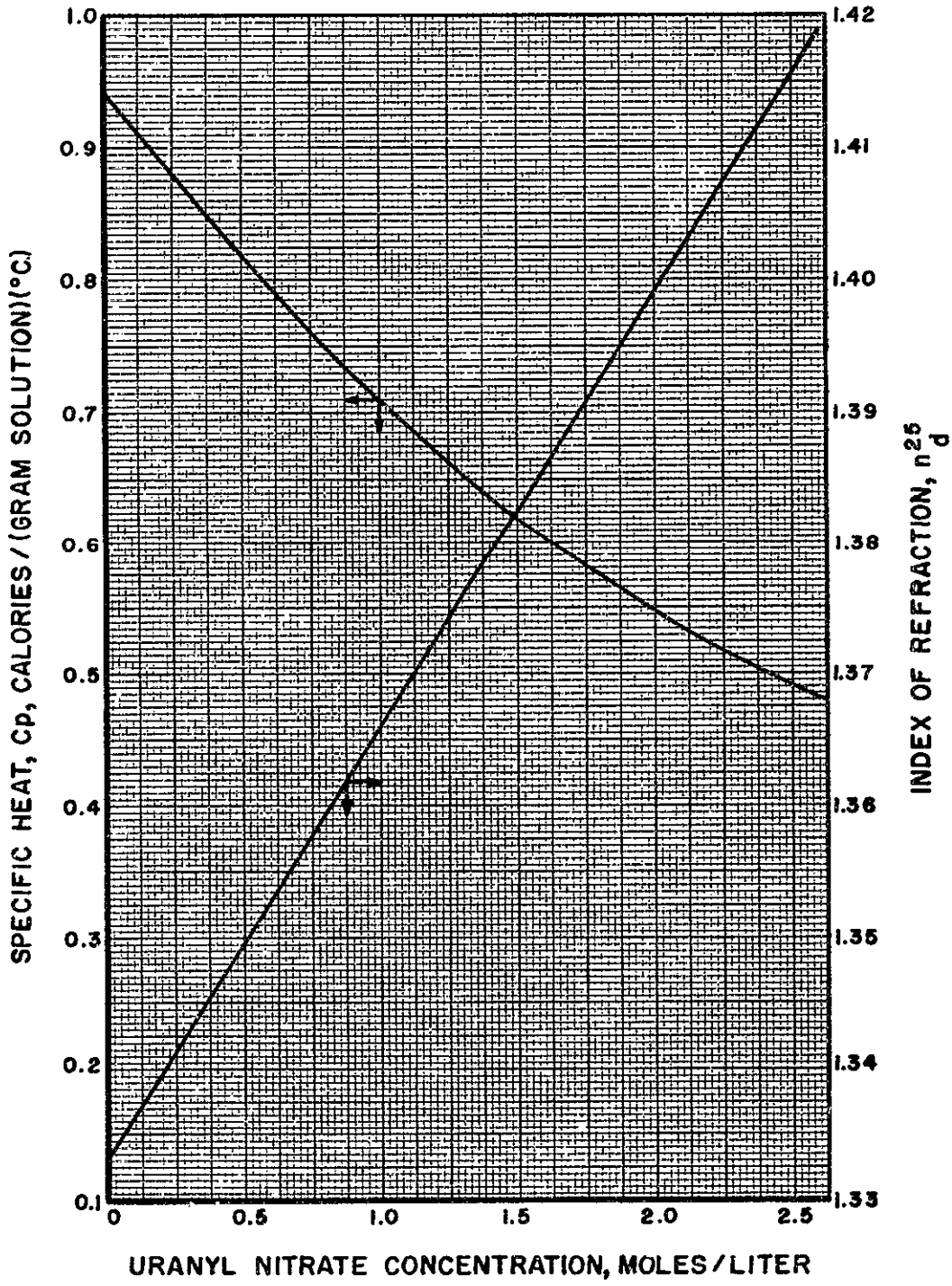

FIGURE IV-13

INTERFACIAL TENSION OF T B P-AMSCO 125-90W AGAINST AQUEOUS SOLUTIONS EFFECT OF UNH AND HNO_3

SOURCE OF DATA: HW-27727

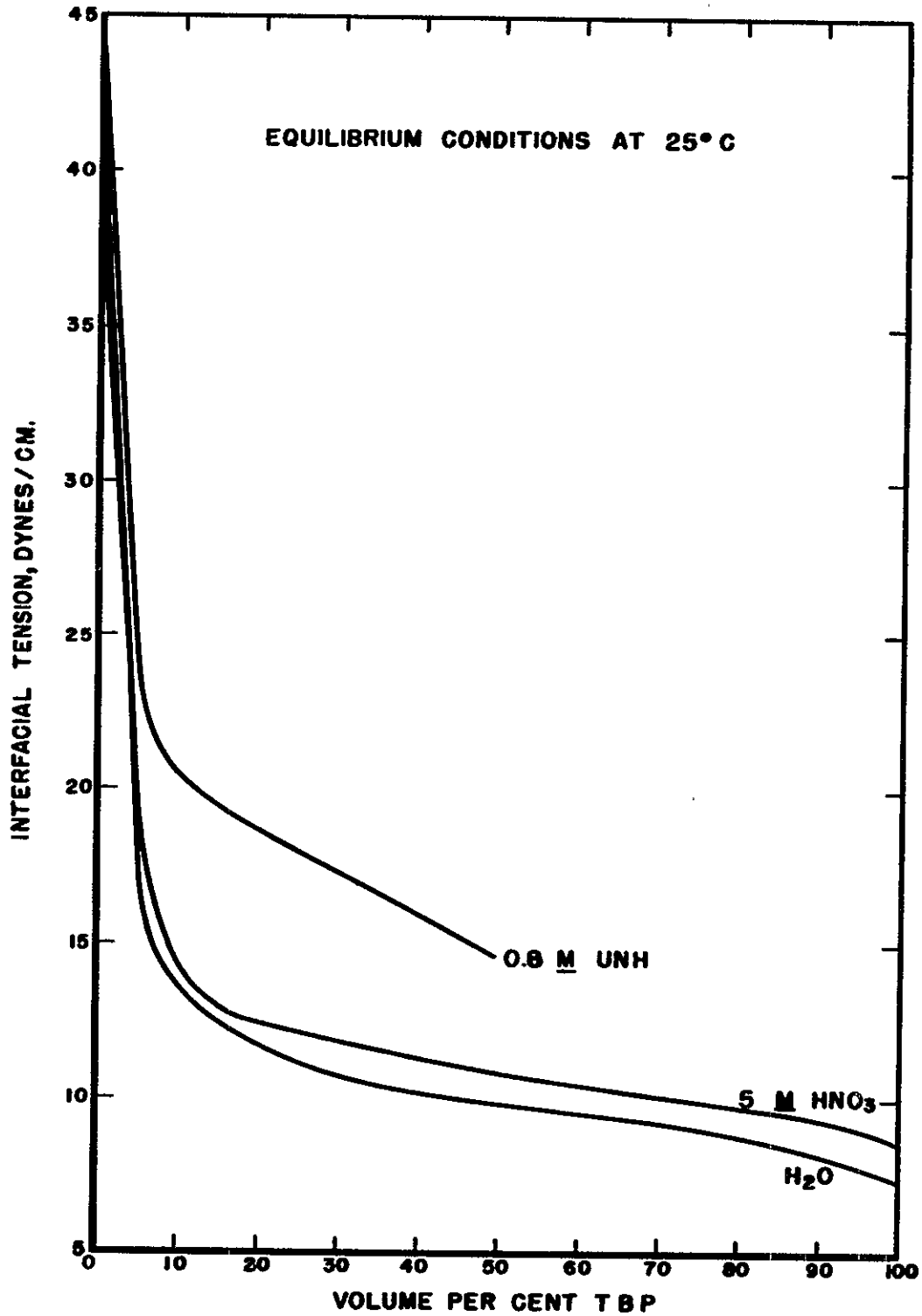

[redacted]

FIGURE IV-14

DISTRIBUTION OF URANIUM
EFFECT OF URANIUM CONCENTRATION
DILUTE RANGE

SOURCE OF DATA: KAPL-602

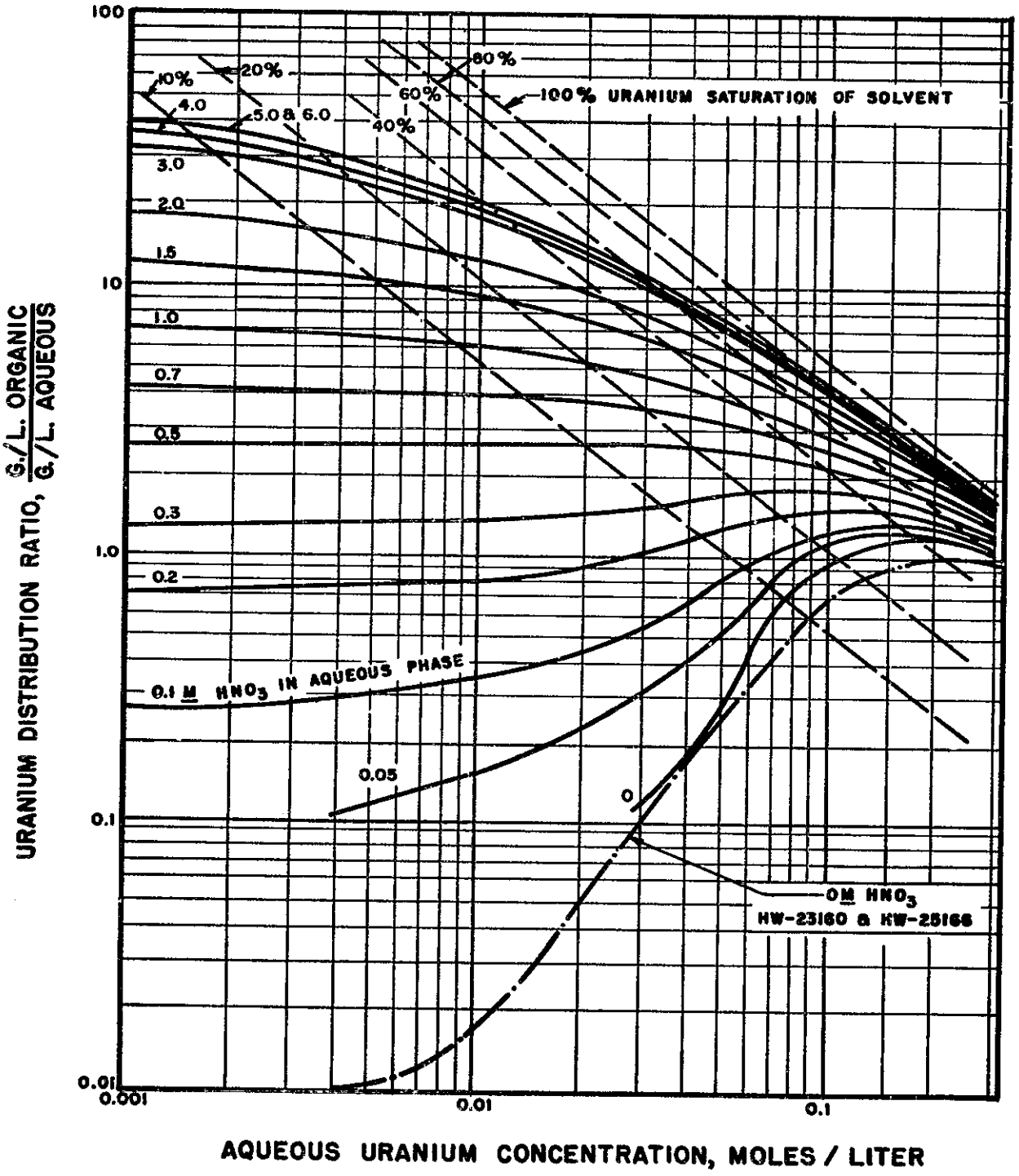

[redacted]

FIGURE IV-15

DISTRIBUTION OF URANIUM

EFFECT OF URANIUM CONCENTRATION

CONCENTRATED RANGE

SOURCE OF DATA: KAPL-602

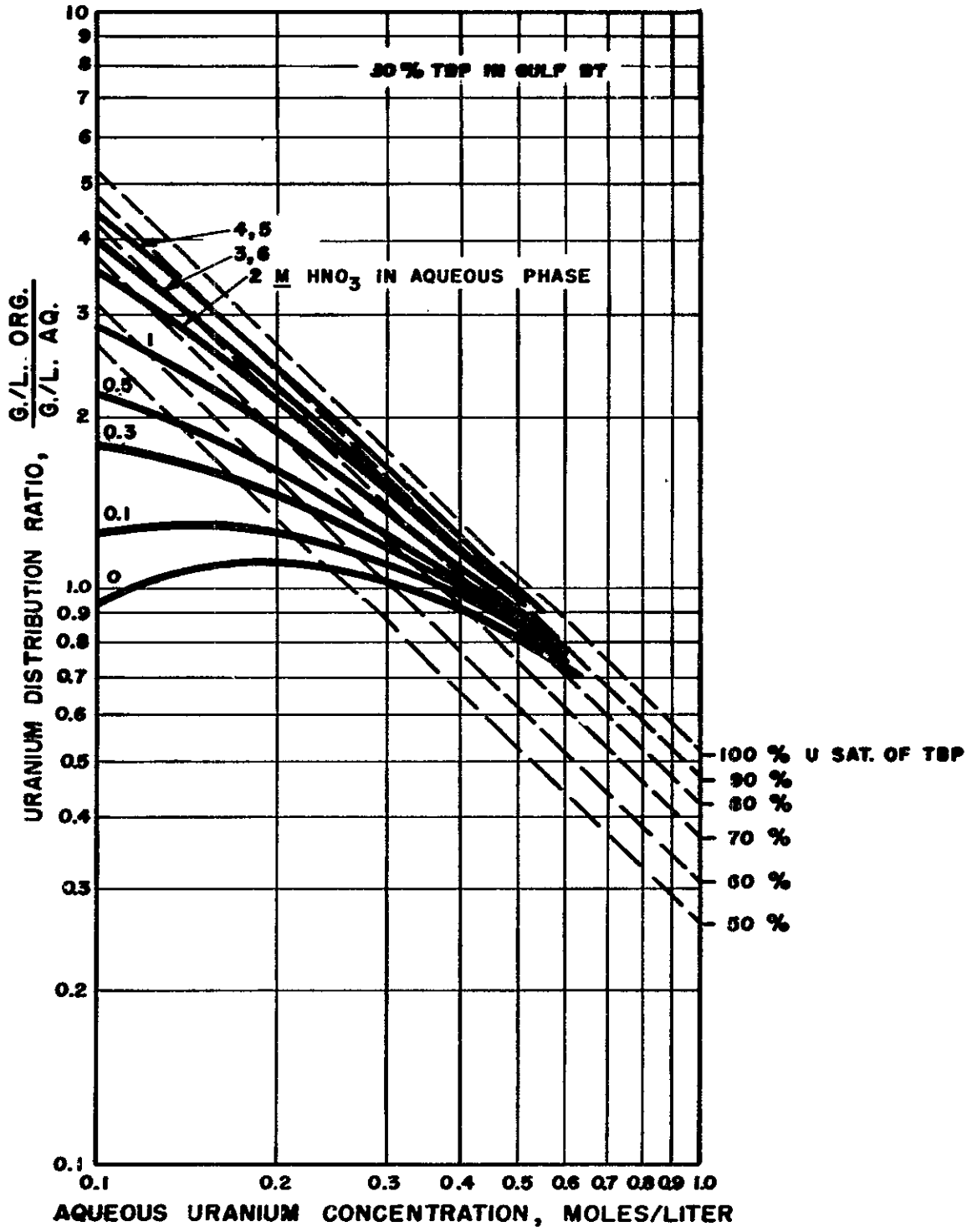

[redacted]

FIGURE IV-16

DISTRIBUTION OF URANIUM
EFFECT OF TBP CONCENTRATION

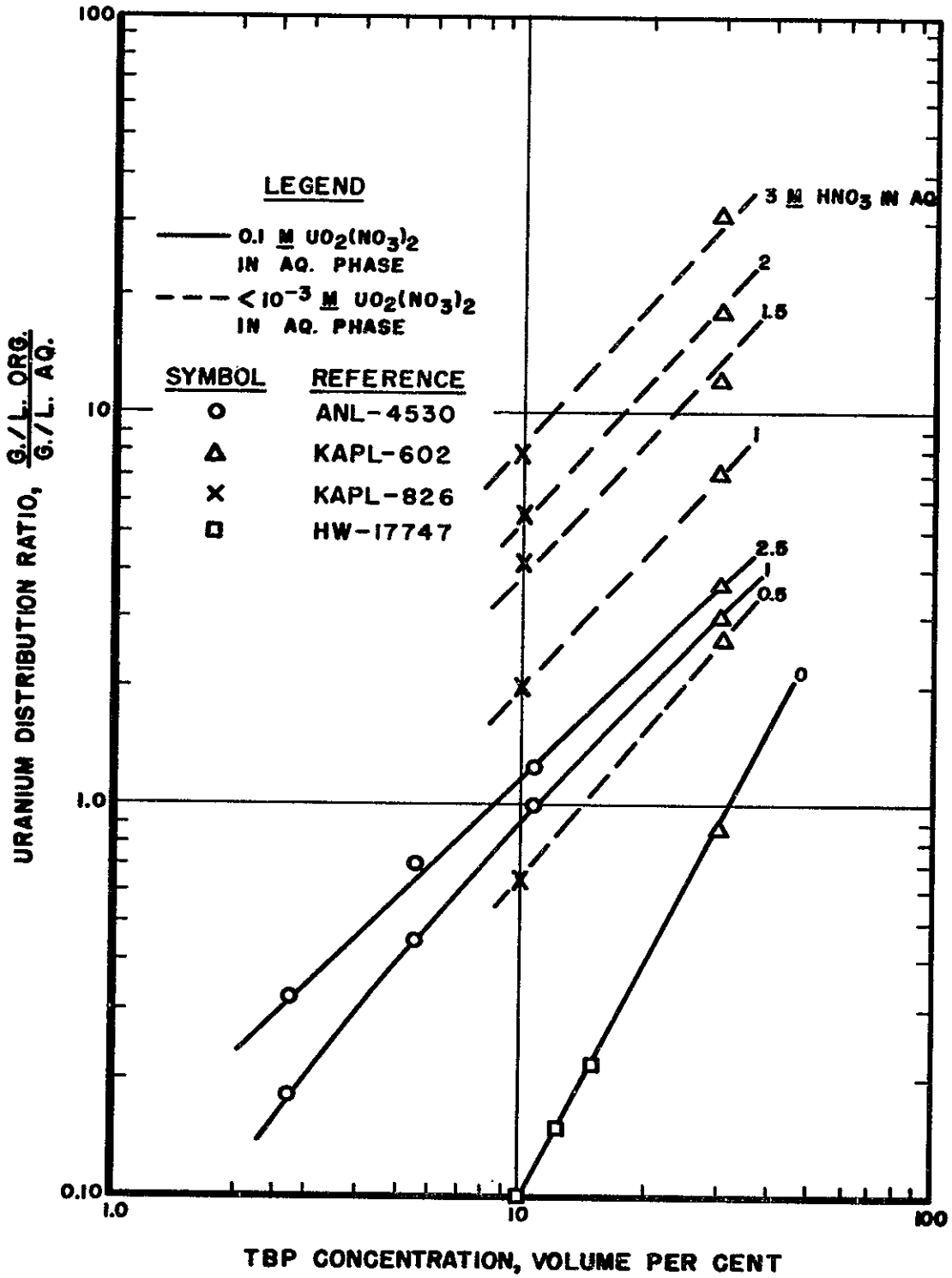

[redacted]

FIGURE IV-17

DISTRIBUTION OF URANIUM
EFFECT OF TEMPERATURE

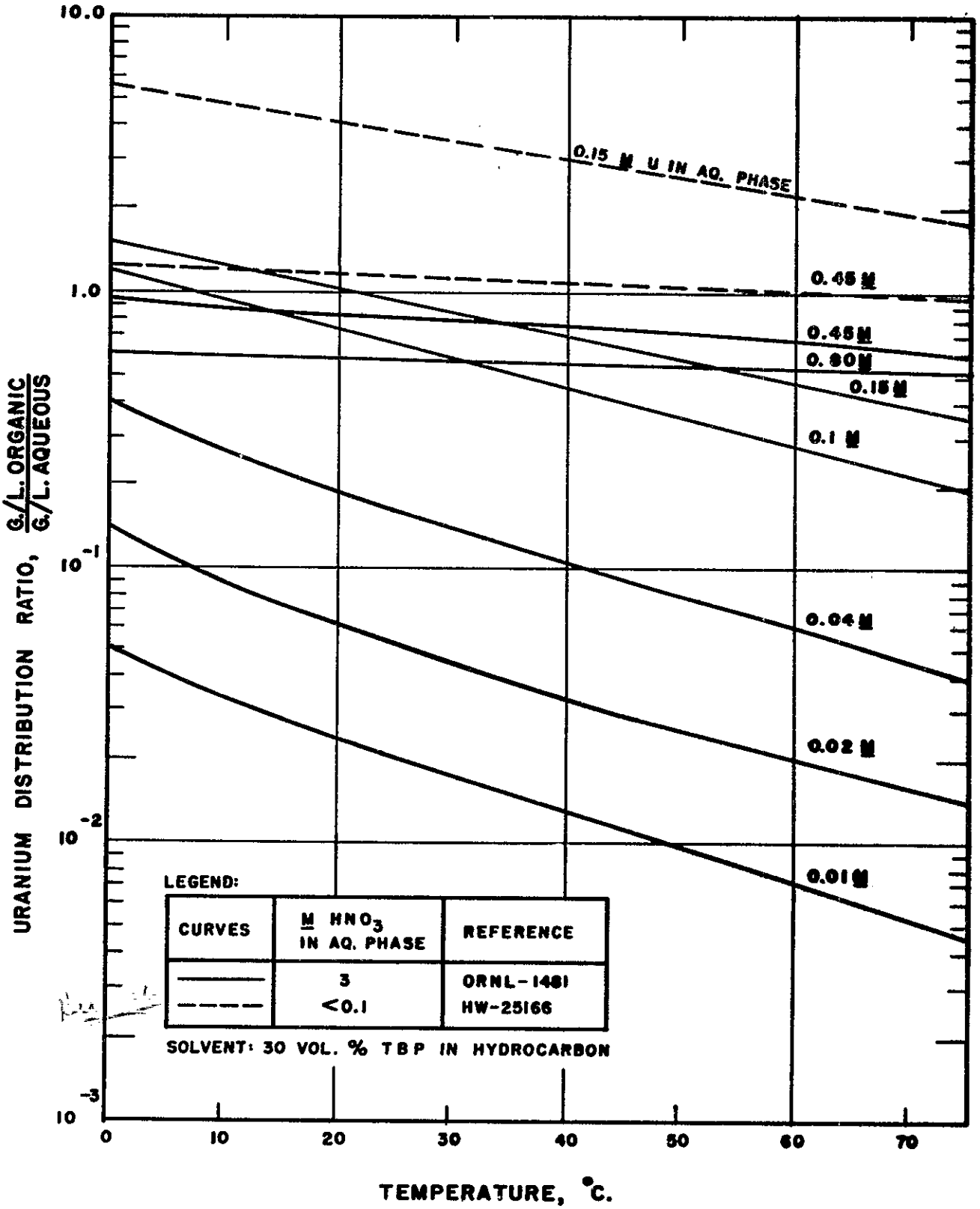

FIGURE IV-18

URANIUM EQUILIBRIUM DIAGRAM

ARITHMETIC COORDINATES

SOURCE OF DATA: KAPL-602
30% TBP IN GULF BT

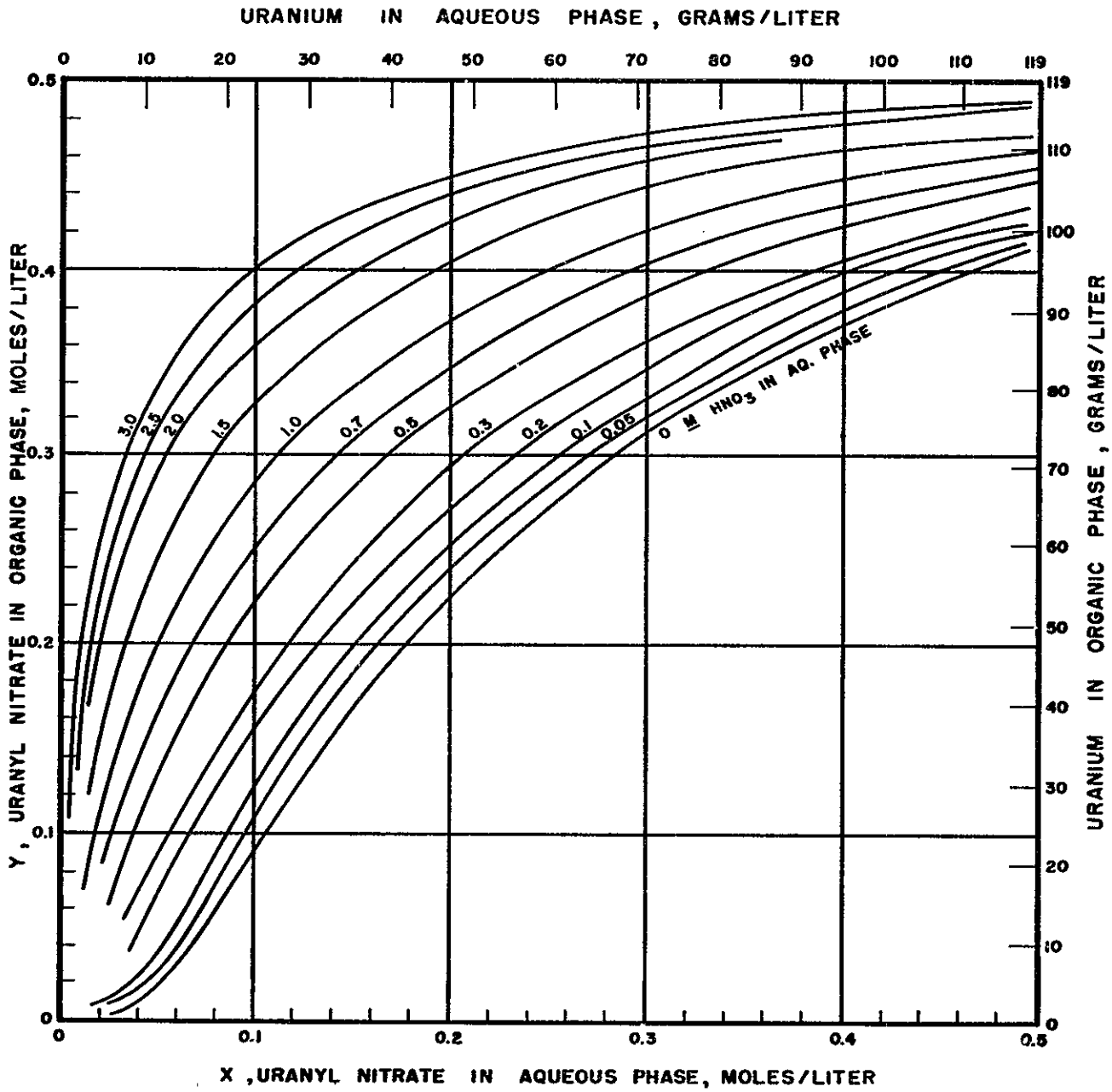

FIGURE IV-19

URANIUM EQUILIBRIUM DIAGRAM

LOGARITHMIC COORDINATES

SOURCE OF DATA: KAPL-602
30 % TBP IN GULF BT

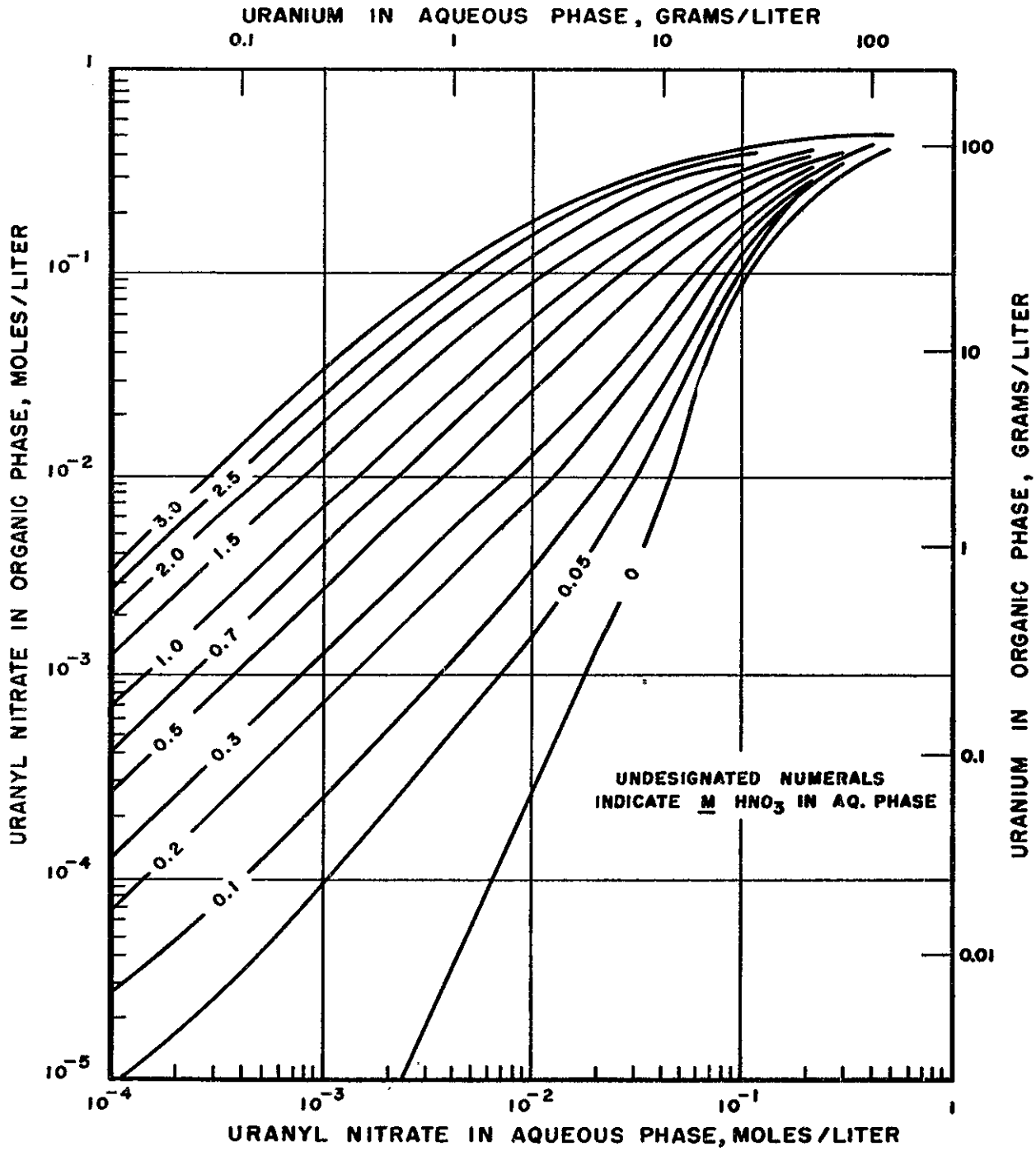

[redacted]

FIGURE IV-20

DISTRIBUTION OF PLUTONIUM
EFFECTS OF VALENCE STATE AND
OF NITRIC ACID CONCENTRATION

SOURCES OF DATA : KAPL-602; AERE-C/R-994

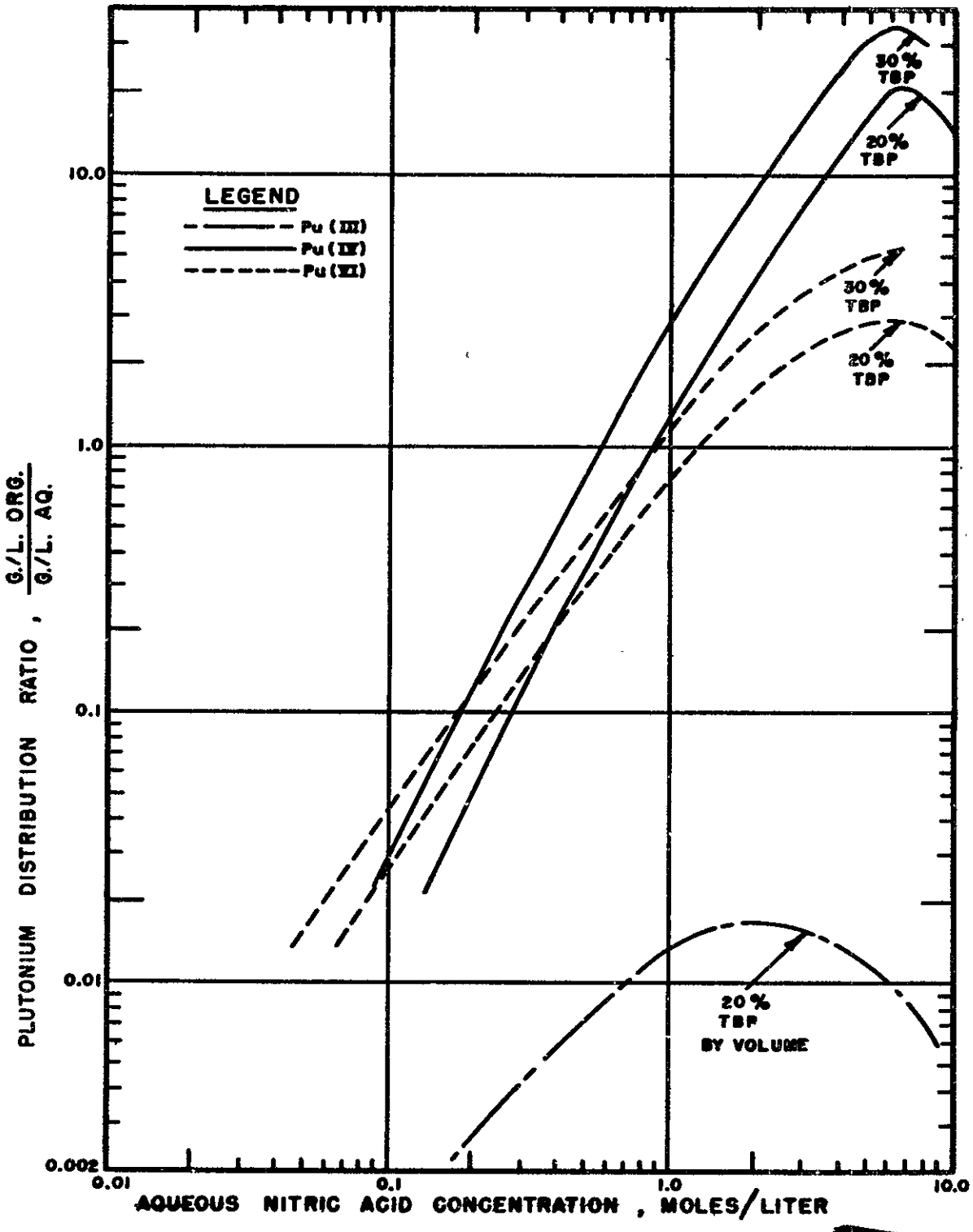

[redacted]

FIGURE IV - 21

DISTRIBUTION OF Pu (III) AND Pu (IV)

EFFECT OF TOTAL NITRATE CONCENTRATION

(APPROXIMATE)

SOURCES OF DATA: KAPL - 602 (FOR Pu IV)
O.R.N.L., INFORMAL COMMUNICATION (FOR Pu III)

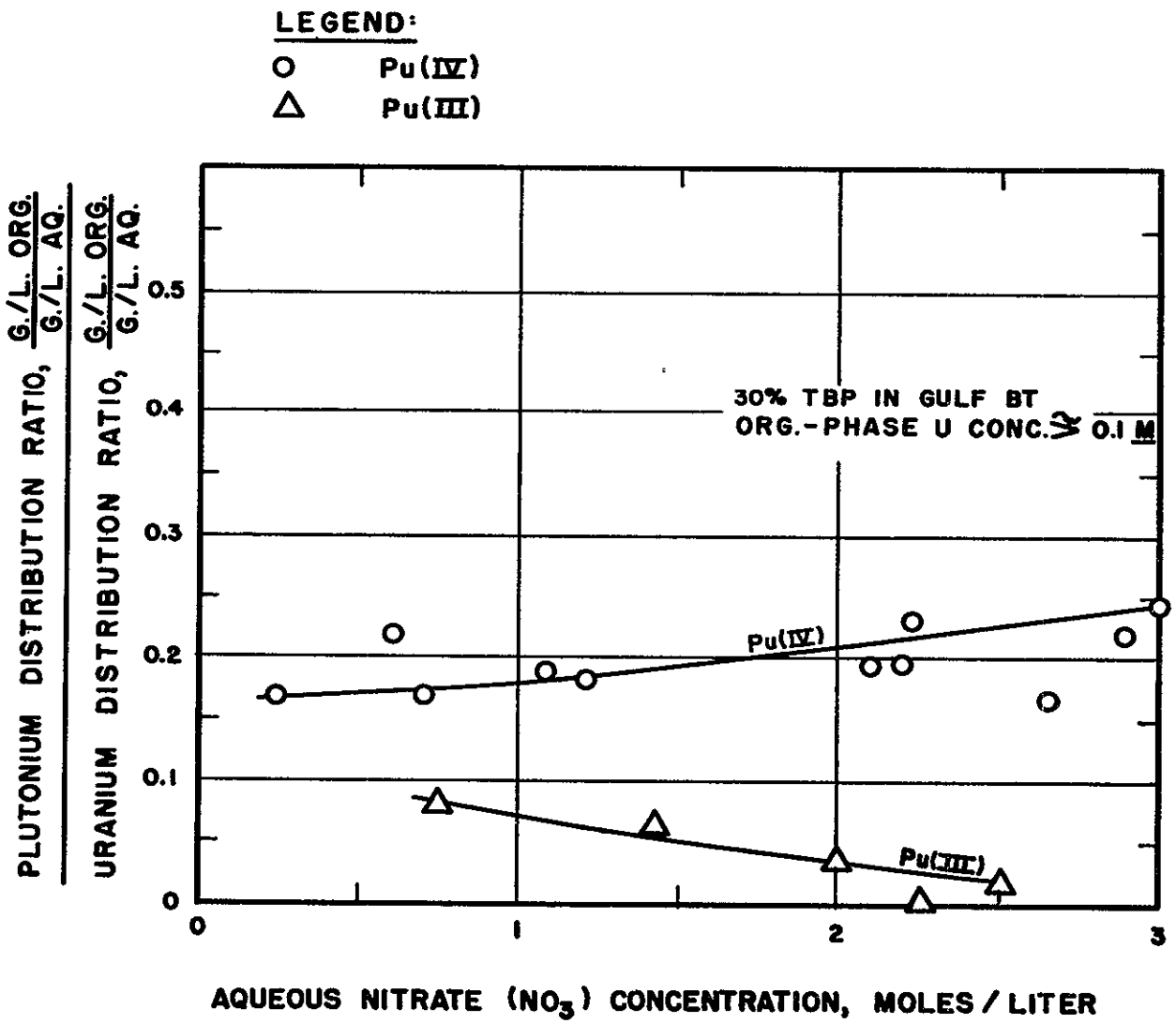

[redacted]

FIGURE IV-22

DISTRIBUTION OF PLUTONIUM
EFFECT OF TBP CONCENTRATION

SOURCE OF DATA: AERE-C/R-994

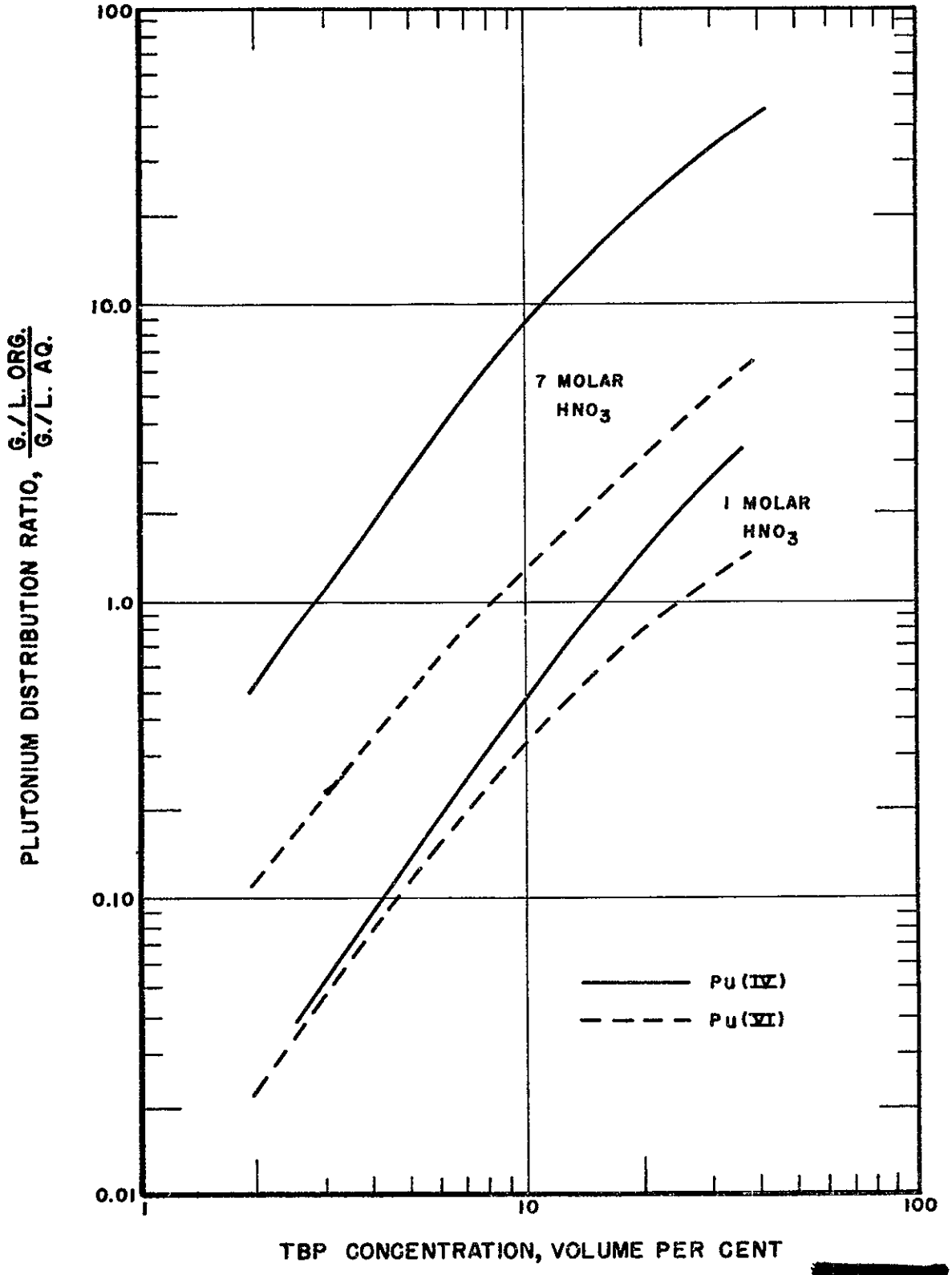

[redacted]

FIGURE IV-23

DISTRIBUTION OF FISSION PRODUCTS

EFFECT OF ORGANIC-PHASE URANIUM SATURATION

SOURCE OF DATA: TID-2012

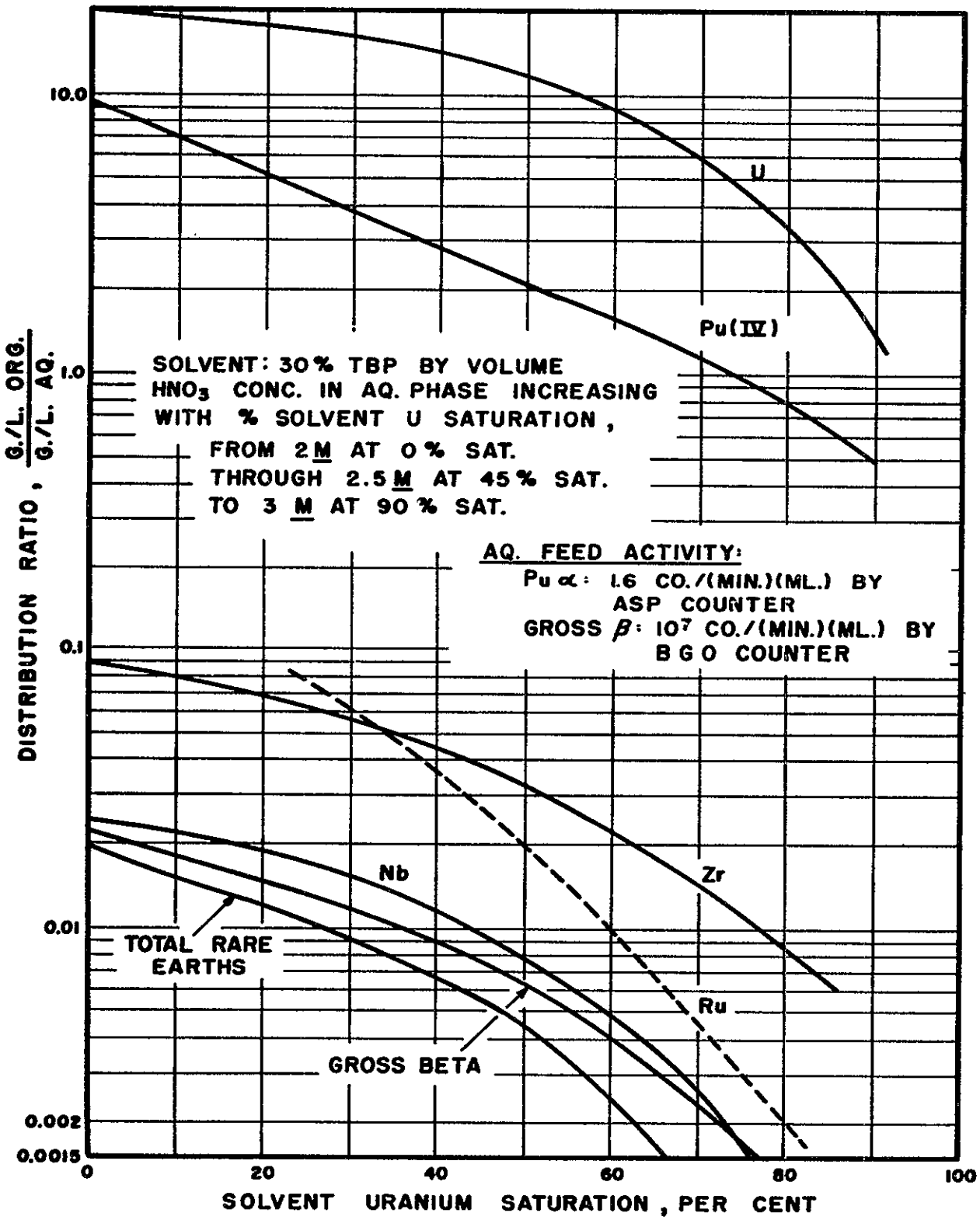

FIGURE IV-24

DISTRIBUTION OF FISSION PRODUCTS IN ABSENCE OF URANIUM

EFFECT OF NITRIC ACID CONCENTRATION

SOURCE OF DATA: TID-2012 (HW-22138 FOR Ce)

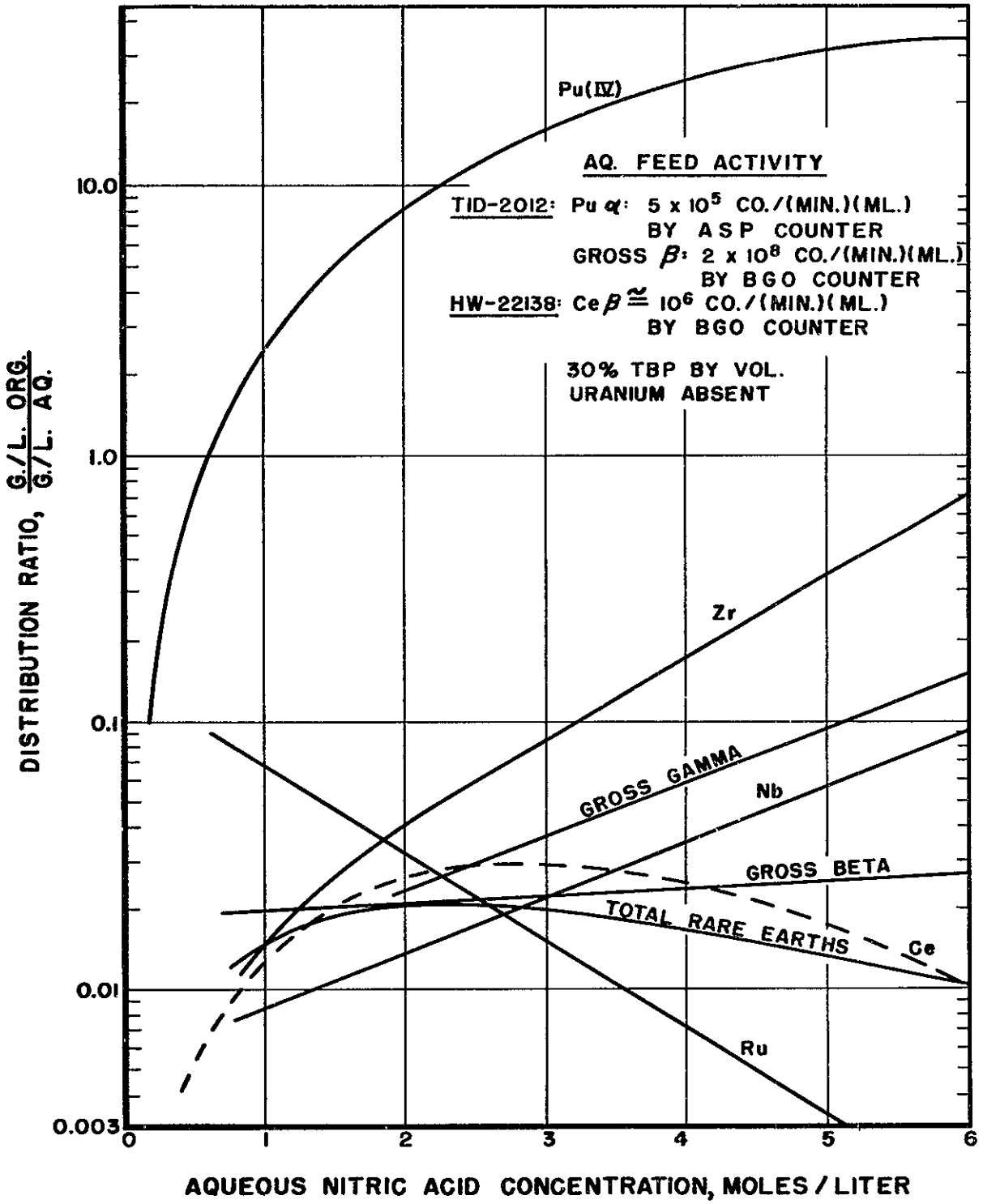

FIGURE IV-25

DISTRIBUTION OF PLUTONIUM AND FISSION PRODUCTS IN PRESENCE OF URANIUM EFFECT OF NITRIC ACID CONCENTRATION

SOURCE OF DATA : TID-2012

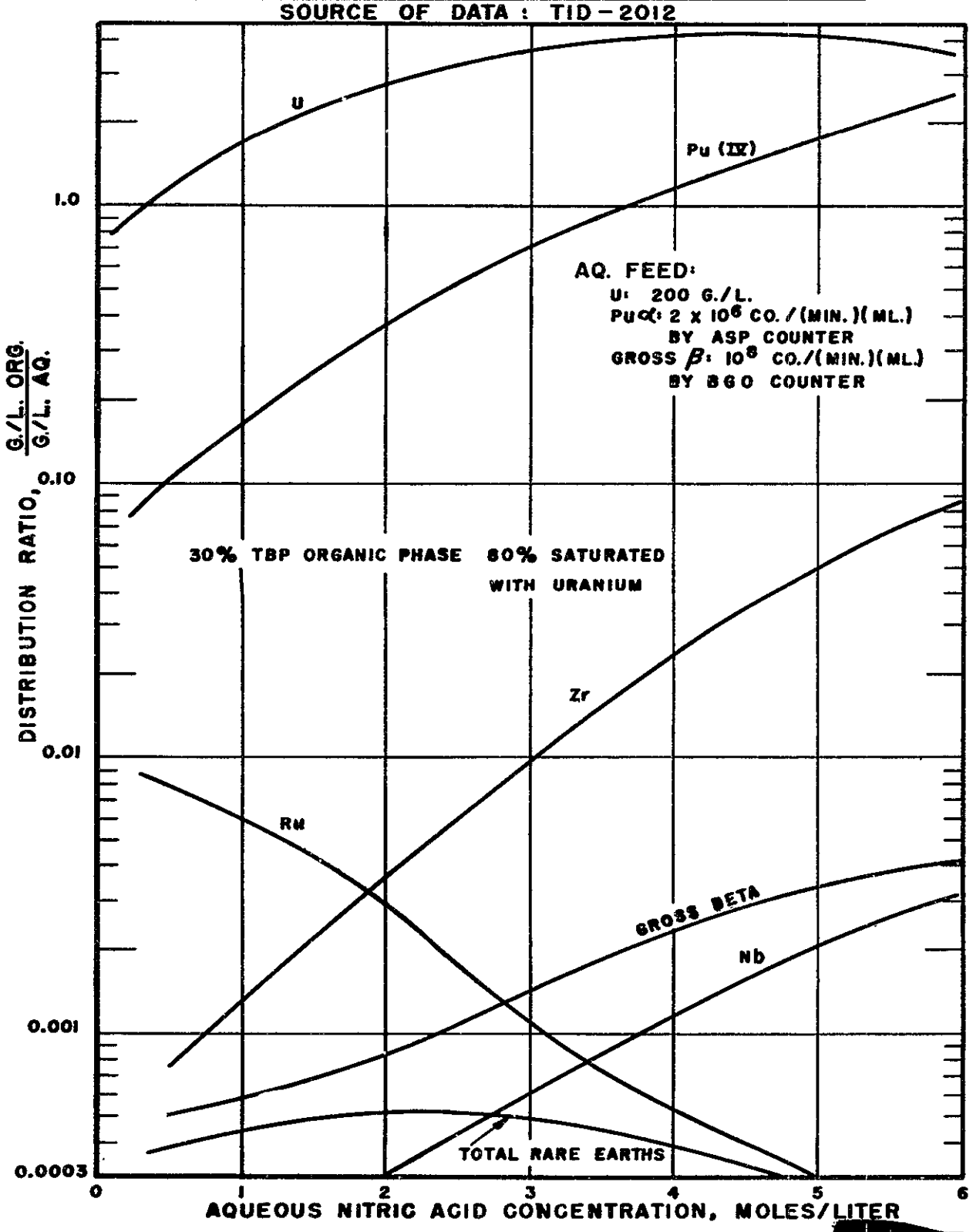

FIGURE IV-26

DISTRIBUTION OF FISSION PRODUCTS

EFFECT OF TBP CONCENTRATION

SOURCES OF DATA: ORNL-1141

AERE-CR-923

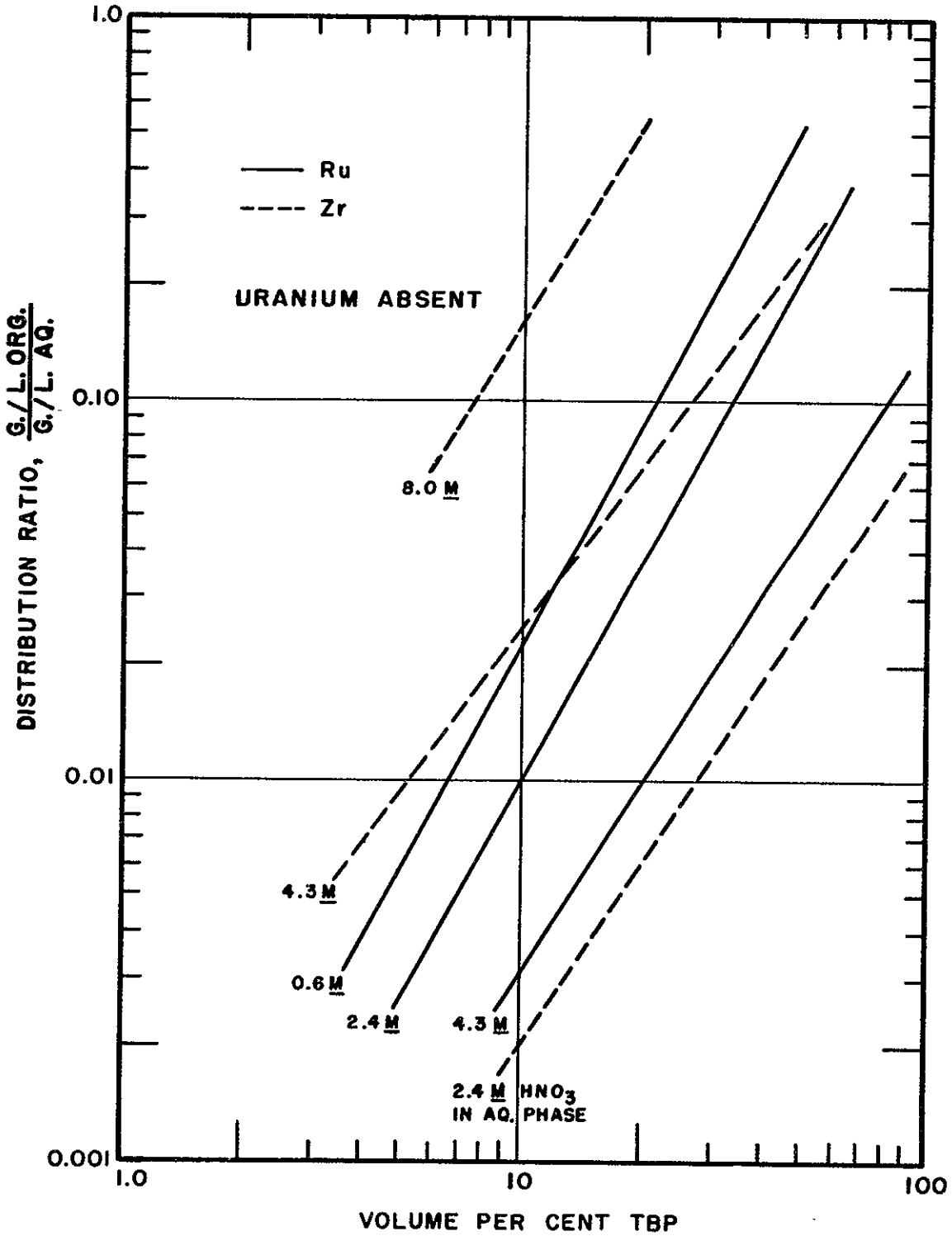

FIGURE IV-27

DISTRIBUTION OF NITRIC ACID

EFFECTS OF UNH & HNO_3 CONCENTRATIONS

SOURCE OF DATA: KAPL-602

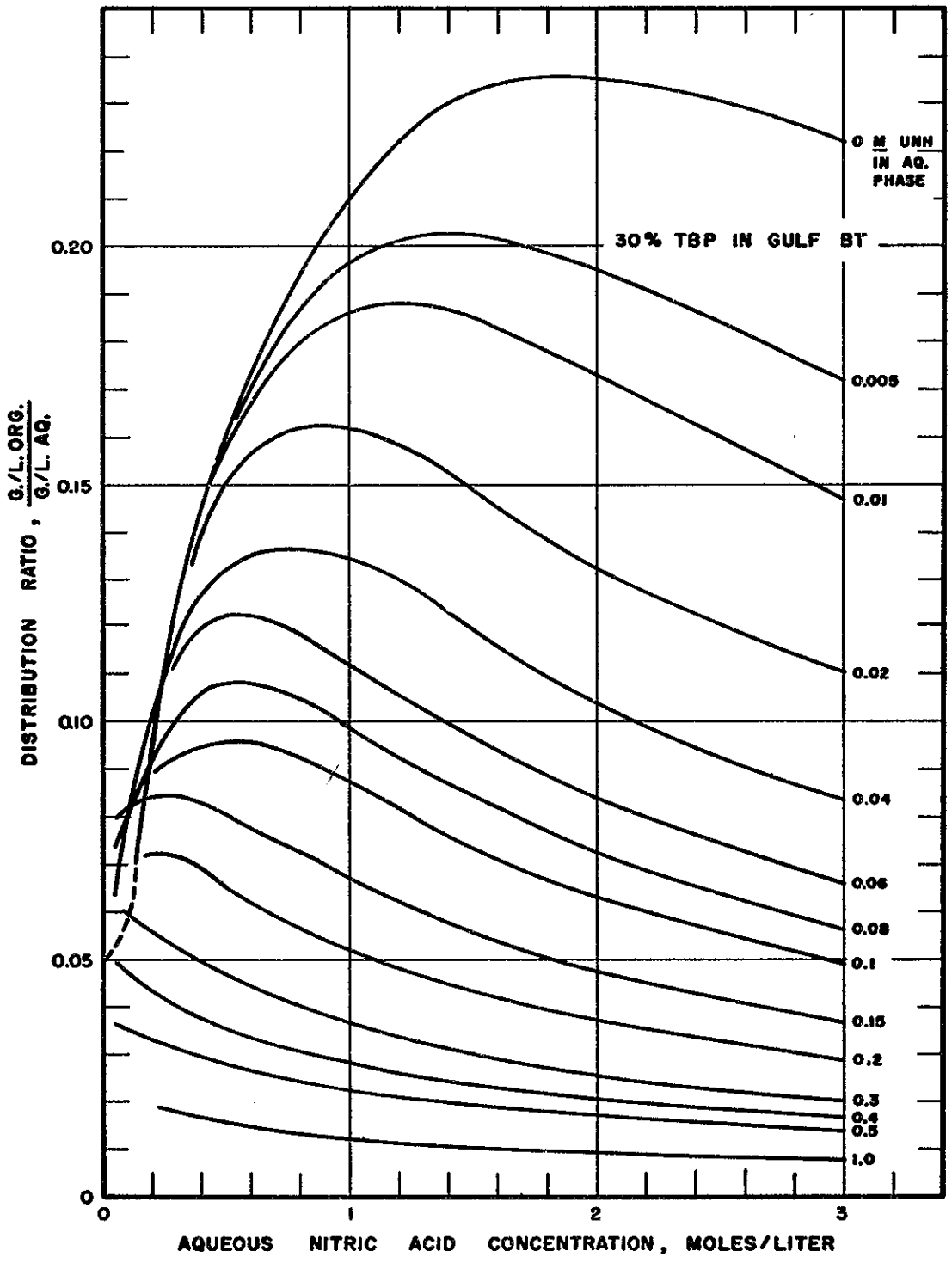

[redacted]

FIGURE IV-28

DISTRIBUTION OF NITRIC ACID
EFFECT OF ORGANIC-PHASE URANIUM SATURATION
SOURCE OF DATA: KAPL-602

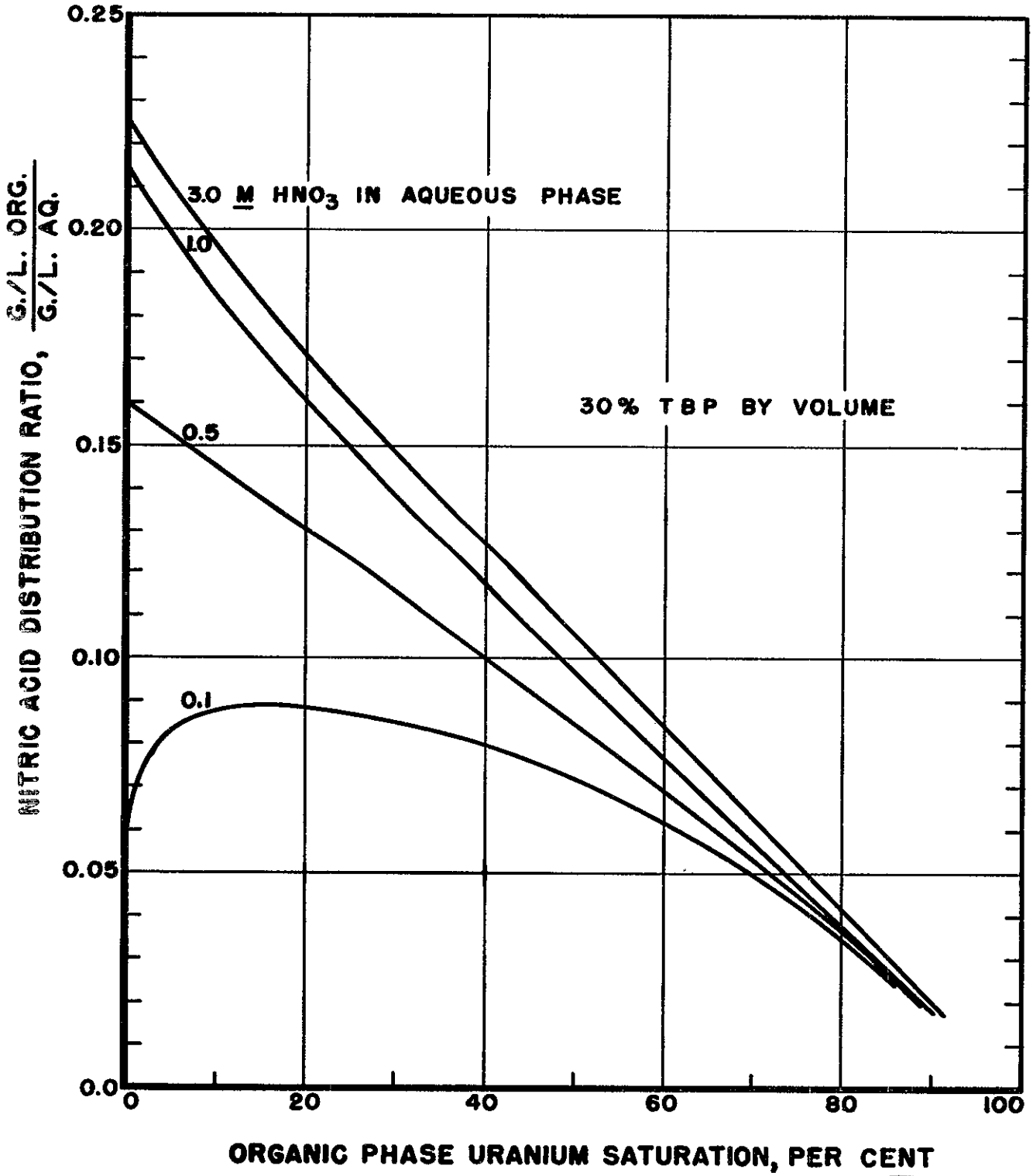

[redacted]

FIGURE IV-29

DISTRIBUTION OF NITRIC ACID
EFFECT OF TEMPERATURE

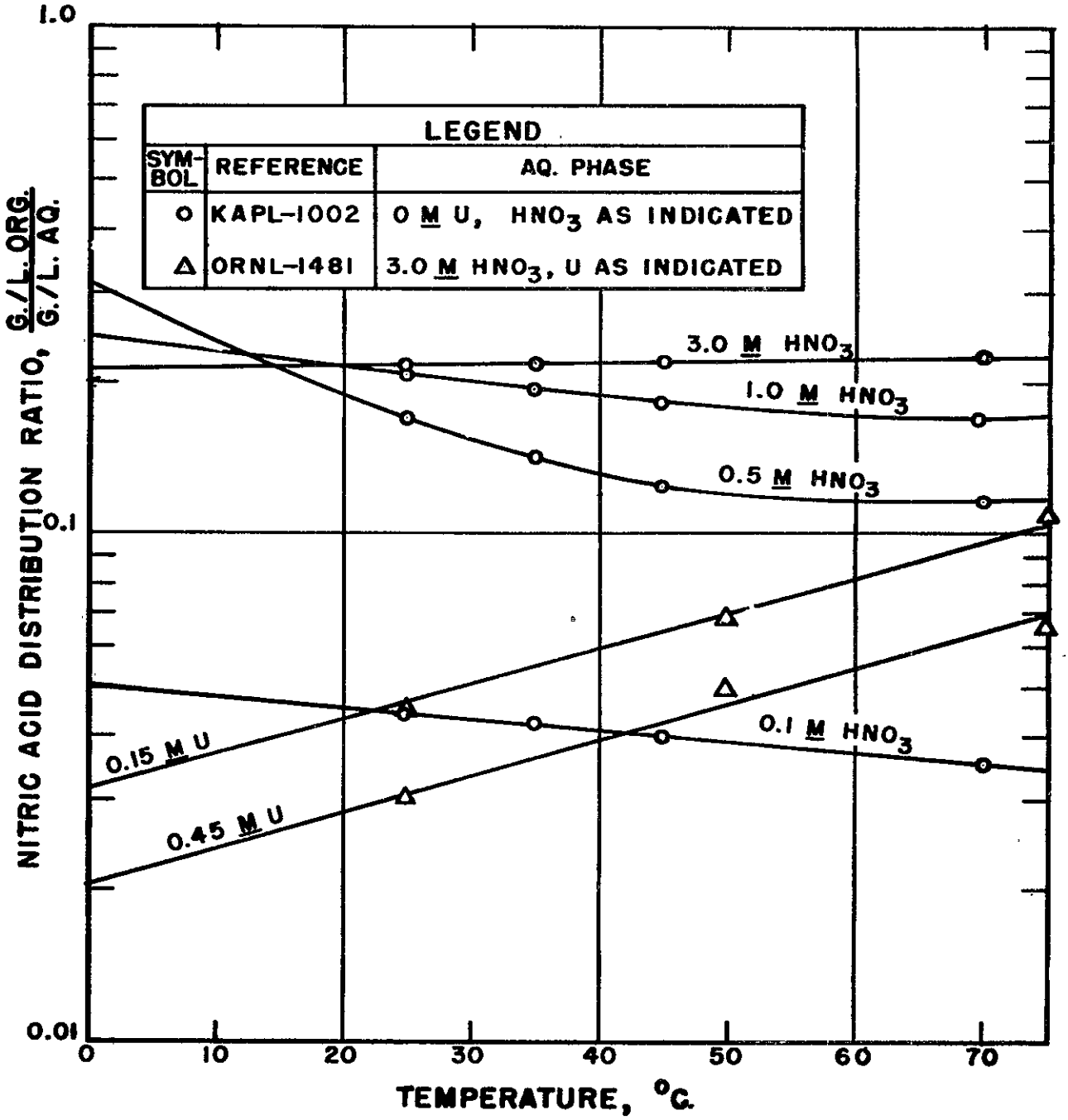

[redacted]

FIGURE IV-30

DISTRIBUTION OF NEPTUNIUM, UX_1, AND UX_2 EFFECT OF NITRIC ACID CONCENTRATION

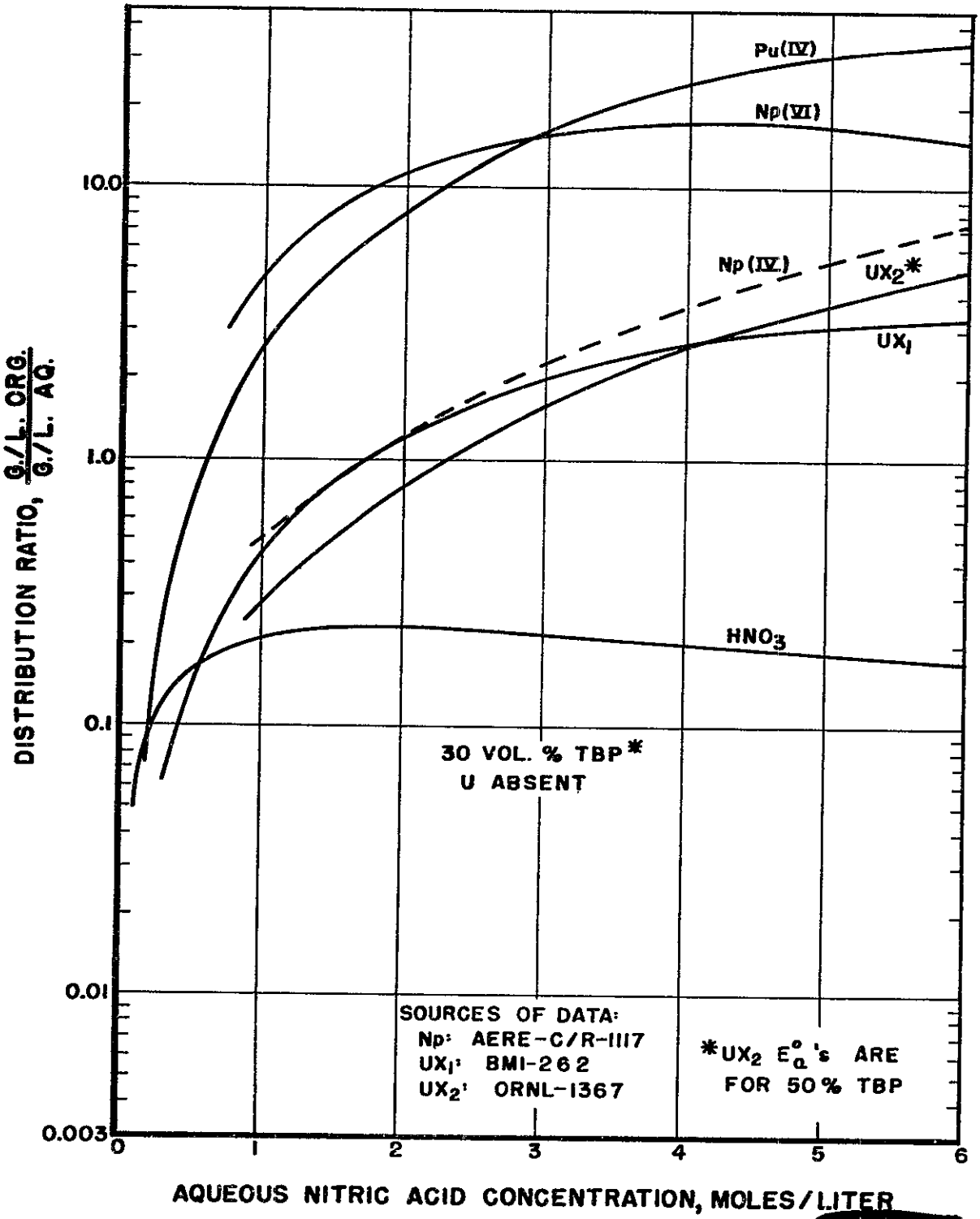

[redacted]

PART II: PROCESS, continued

CHAPTER V. PROCESS ENGINEERING (SOLVENT EXTRACTION)

CONTENTS

	Page
A. BASIC PRINCIPLES	503
1. Principles of Solvent Extraction	503
2. Solvent-Extraction Equipment	505
3. Pulse Columns	509
4. Special Terms	510
B. THE OPERATING DIAGRAM (H.E.T.S. AND H.T.U. CALCULATIONS)	517
1. Introduction	517
2. Operating-Line Equations	517
3. Example H.E.T.S. and H.T.U. Calculations	519
4. Operating Diagrams for Purex Columns	526
5. Stage and Transfer-Unit Requirements for Purex Columns	526
6. Minimum Extractant-to-Raffinate Flow Ratios	527
C. PULSE-COLUMN VARIABLES	529
1. General Performance Characteristics of Pulse Columns	529
2. Effect of Operating Variables on Extraction and Capacity	532
3. Effect of Design Variables on Extraction and Capacity	537
D. DEVELOPMENT OF PUREX PULSE-COLUMN SPECIFICATIONS	542
1. Purex-Plant Pulse Columns	542
2. Functional Requirements	543
3. Development of A-Type Column Design	543
4. Development of C-Type Column Design	545
5. Development of IB Extraction Column Design	547
6. Development of IB Scrub Column Design	547
7. Development of 2A Column Design	549
8. Development of 2B Column Design	550
9. Development of O-Type Column Design	551
10. Standardization of Pulse Generators	553
E. EXTRACTION PERFORMANCE AND CAPACITY OF PUREX PULSE COLUMNS	554
1. Introduction	554
2. A-Type Columns	555
3. C-Type Columns	557
4. IB Extraction Column	560
5. IB Scrub Column	562
6. 2A Column	563

CONTENTS

Page

7. 2B Column 564
8. O-Type Columns 565

F. DECONTAMINATION 566

1. Introduction 566
2. Design Basis for Decontamination 566
3. Mass Transfer of Fission Products 567
4. The "Irreversible" Extraction of Some Fission Products 571
5. Pilot-Plant Decontamination Performance 572

G. USE OF COLUMN PRESSURE INSTRUMENTS 579

1. Apparent Specific Gravity in a Pulse Column 579
2. Effect of Flow Rate and Pulsing Conditions on Column Apparent Specific Gravity 580
3. Indications of Flooding 581
4. Indications of Instability 581
5. Indications of High Uranium Loss 581

H. SPECIAL PROBLEMS 582

1. "Inextractible" Uranium and Plutonium 582
2. "Crud" Formation 582
3. Emulsions 583
4. Pulse Transmission 586

NOMENCLATURE 587

REFERENCES 589

LIST OF TABLES AND FIGURES 593

CHAPTER V. PROCESS ENGINEERING (SOLVENT EXTRACTION)

This chapter discusses the chemical-engineering technology of the pulse columns in which the solvent-extraction process employed in the Purex Plant is carried out. The Purex solvent-extraction process is described and discussed from the chemical viewpoint in Chapter IV. Operating procedures are outlined in Chapter VI. The pulse columns and associated pulse generators are described in Chapter XII.

A. BASIC PRINCIPLES

1. Principles of Solvent Extraction

A solvent-extraction operation is defined as one in which the separation of mixtures of different substances is accomplished by treatment with a selective liquid solvent. Although solvent-extraction operations may include leaching and washing, the Purex process is concerned only with liquid-liquid extraction, in which one or more solutes in a liquid phase are preferentially extracted into a second, immiscible liquid phase. The effectiveness of the extraction is dependent on the chemical composition and physical properties of the two phases as well as on the type of extraction equipment. There are many different solvent-extraction methods available for obtaining the liquid-liquid extraction performance desired. A few of these methods are discussed briefly below.

1.1 Simple contact

The simplest method and the one most common on a laboratory scale is the simple contact in which the solvent and the feed to be extracted are brought together, mixed, and the two phases allowed to settle. The operation may be either batch, as in a beaker experiment, or continuous, as shown in the schematic flow diagram below:

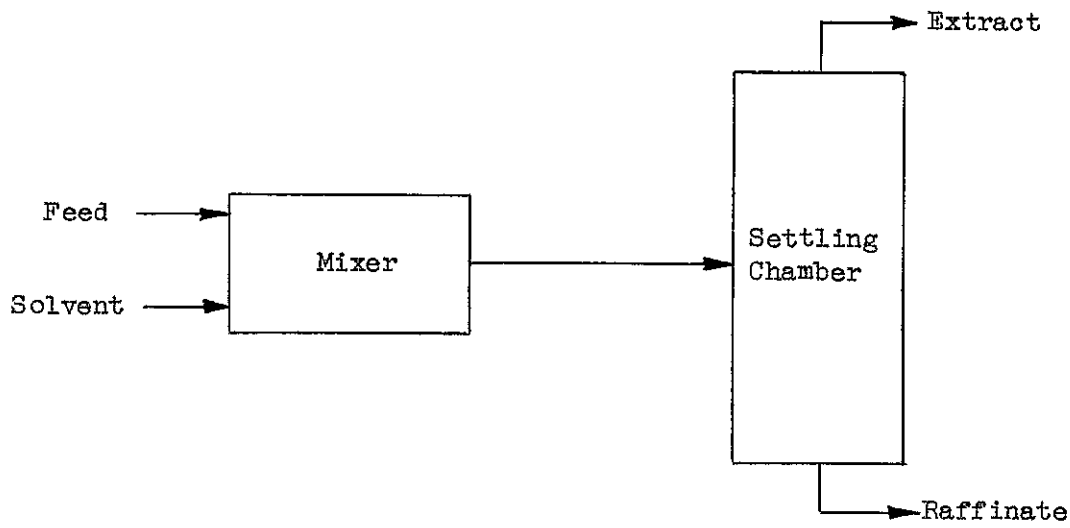

[redacted] Simple Contact Extraction [redacted]

For any given ratio of solvent to feed, the maximum amount of solute which may be extracted is fixed solely by equilibrium considerations.

1.2 Simple multistage (cocurrent) contact

In a simple contact the extract and raffinate solute concentrations are fixed by the equilibrium distribution coefficient. If a raffinate with a lower concentration of solute is desired, the raffinate from the first simple contact may be mixed with fresh solvent, as shown in the schematic diagram below:

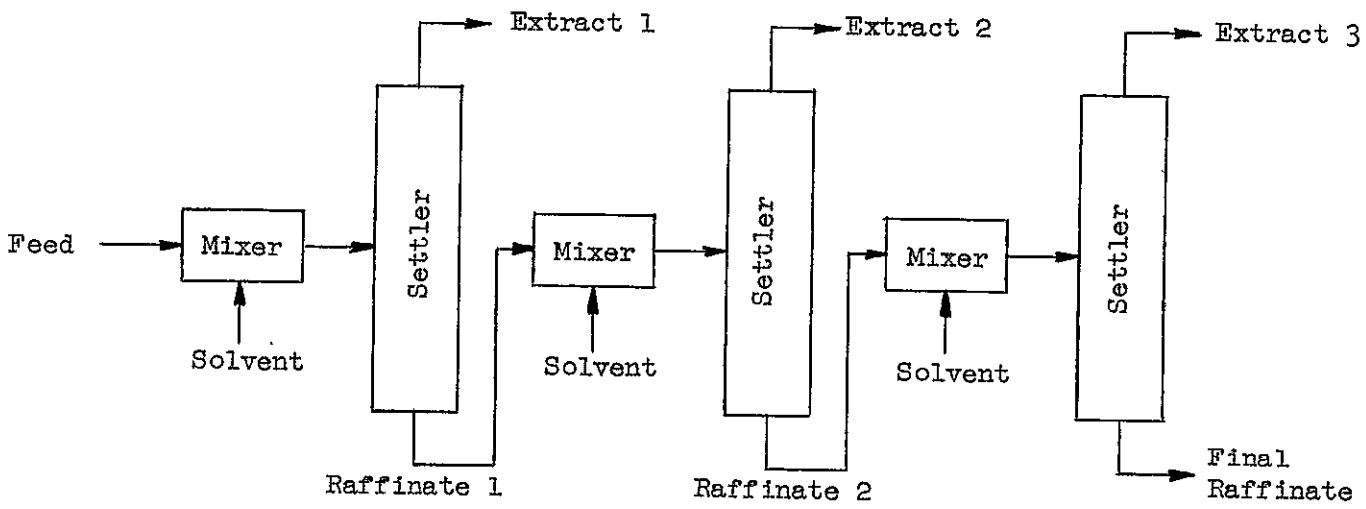

Simple Multistage Extraction (3 Contacts)

If a sufficient number of contacts are made and a sufficiently large volume of solvent is used, the concentration of the extracted component in the final raffinate may be reduced to almost any desired low value.

1.3 Countercurrent multicontact extraction

In countercurrent multicontact extraction, feed and solvent enter the system at opposite terminals of a series of contacts and flow countercurrently through the system. Fresh extractant first contacts low-solute-concentration raffinate and then contacts more concentrated raffinate as its own solute concentration increases.

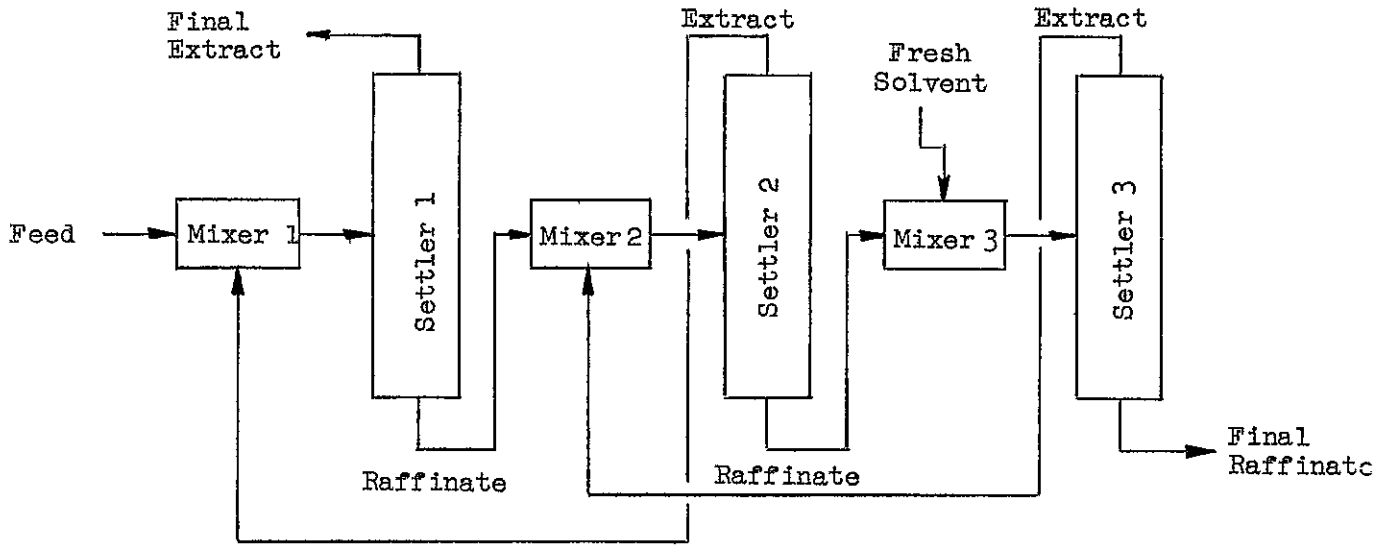

Countercurrent Multicontact Extraction

1.4 Continuous countercurrent differential contact

In continuous countercurrent differential contact operations a very large number of infinitesimally small contacts are achieved by subdividing (dispersing) one phase and passing it countercurrently through the other (continuous) phase. Either of the phases may be continuous or dispersed. For example, if the lighter phase is to be continuous, the dispersed heavy phase is introduced at the top and allowed to fall by gravity through the continuous phase, and conversely. In practice, continuous countercurrent differential contacting is achieved in solvent-extraction columns.

2. Solvent-Extraction Equipment

Many different types of equipment are available and could conceivably be used to accomplish the required plutonium and uranium separation and purification in the Purex Plant. The principal limitations, advantages, and disadvantages of the important equipment types are mentioned in the following discussion.

2.1 Batch equipment

Batch equipment has been used in the Purex process development only in laboratory equilibrium determinations. A high stage efficiency may be achieved in each contact in batch equipment, but the large number of

stages required present design and operating problems which render the use of continuous equipment for the Purex Plant much more advantageous.

2.2 Continuous mixer-settlers

2.21 General

Continuous mixer-settler equipment can be designed to conduct simple, cocurrent multiple, or countercurrent multiple-contact operations. Of these three methods, only countercurrent multiple contact has been used in pilot-plant studies since the other two methods involve a comparatively inefficient use of solvent. Among the contactors of this type considered for Pu-U separations processes were the multiple-vessel mixer-settler, the S.O.D. (Standard Oil Development) mixer-settler, the horizontal extractor, and the pump mixer-settler. The last, a recent Knolls Atomic Power Laboratory development, will be discussed under 2.22 below.

Mixer-settler equipment can frequently be operated at high stage efficiencies (80% or better), thus indicating with a fairly high degree of certainty the number of stages to provide for the desired separation. Horizontal-type mixer-settlers usually require less canyon height but greater canyon length than vertical solvent-extraction columns of the same processing capacity. An agitator is required for each stage to mix the phases adequately.

2.22 Pump mixer-settler (S. P. R. U. type)[2,35]

Pump-type mixer-settlers, developed by S.P.R.U. (Separations Process Research Unit of the Knolls Atomic Power Laboratory) are employed as the solvent-extraction contactors in the Savannah River Purex Separations Plant, operated by duPont for the A.E.C. A schematic representation of two stages of this unit is shown below:

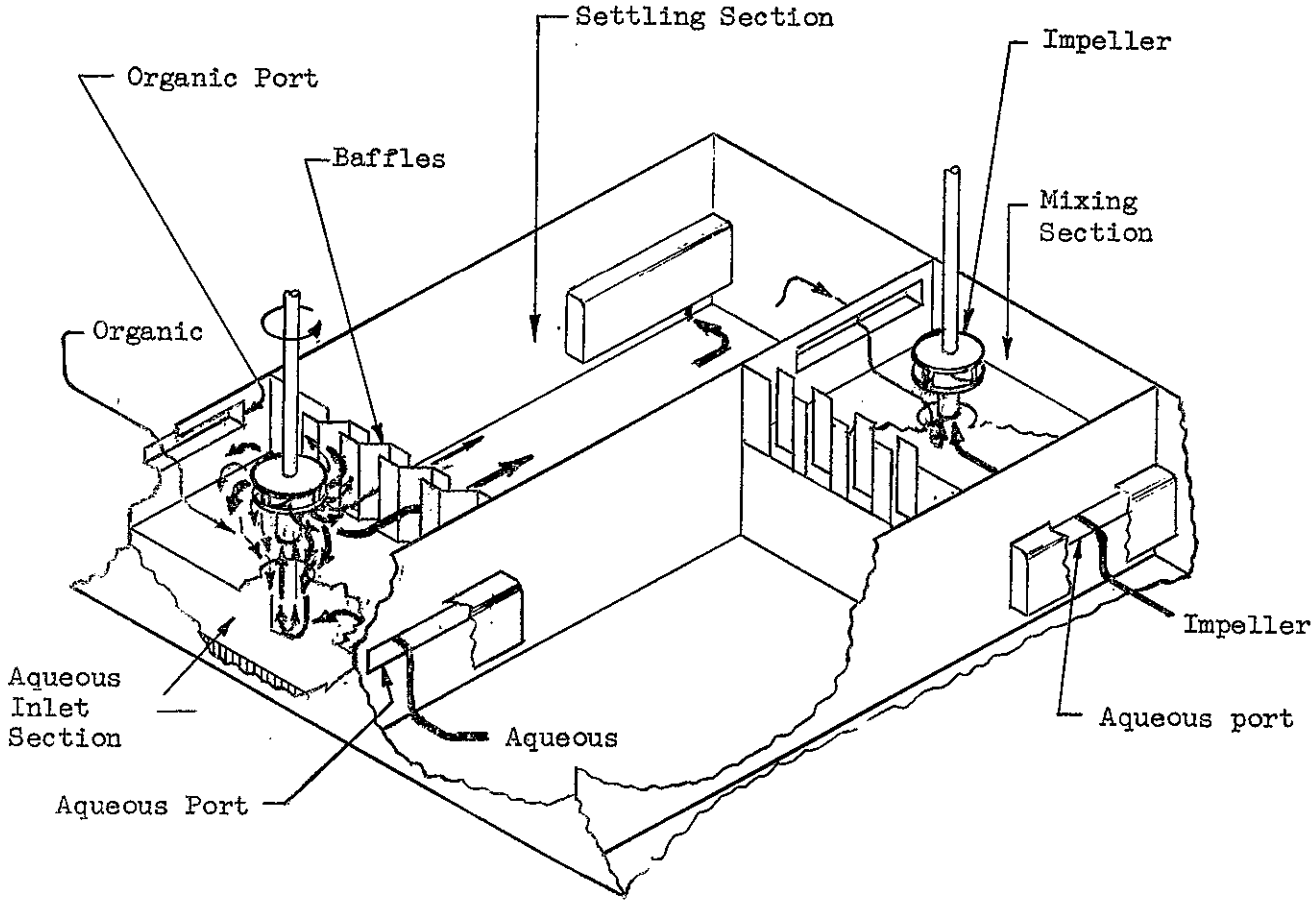

Schematic Cutaway of Pump-Type Mixer-Settler

In this compact mixer-settler the mixing chambers are separated from the settling chambers by partitions. A centrifugal pump-agitator in each mixing chamber picks up both incoming phases in a hollow, vertical shaft and discharges them radially, intimately mixed, into the adjacent settling zone, thus producing the necessary hydraulic head to produce stage-to-stage flow and maintaining the liquid-liquid interface in the desired position in each stage.

The two-phase flow in each settling zone is cocurrent. Flow between stages is countercurrent.

There are no submerged seals or bearings and the motor-impeller assembly may be replaced by remote control.

2.3 Solvent-extraction columns

Columns are used to accomplish solvent extraction by the counter-current differential method discussed in 1.4 above. The simplest type of column is the spray column. The dispersed phase is introduced through a suitable nozzle and rises (or falls) through the continuous phase in the column to the liquid-liquid interface.

In a packed column more effective extraction may generally be obtained than in an open spray column of the same height. In a packed column the dispersed phase is broken up and forced to follow a tortuous path through a packing material such as Raschig rings or Berl saddles. The type of packing used for a given application depends largely upon the chemical nature of the system and the processing requirements, while the packing depth (packed height) is dependent upon the degree of separation required.

In pulse columns, used as the Purex-Plant solvent-extraction contactors, still more effective contacting may be obtained. They are discussed in Subsection 3, below.

Extraction columns may be operated with either phase continuous by controlling the position of the interface in the column. Interface control is somewhat simpler with the heavy phase continuous, though in some Purex columns this advantage is offset by lowered efficiencies (see Sections C and D). Settling zones (usually of enlarged cross-sectional area), in which phase disengagement takes place, are provided at each end of the column.

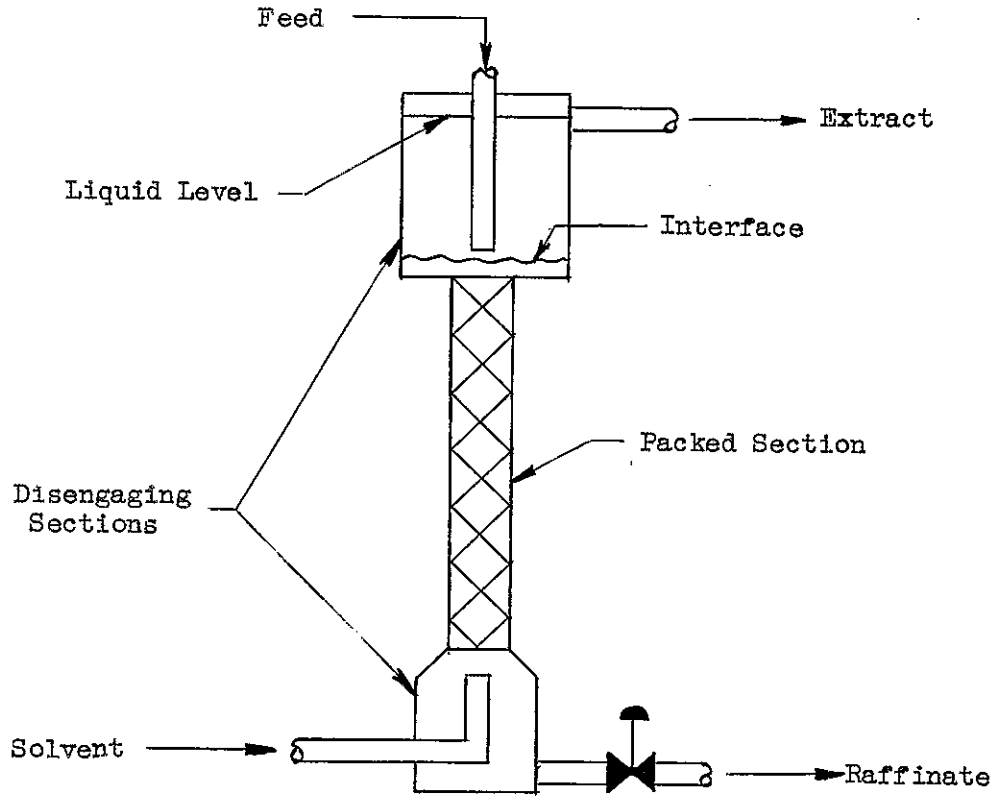

Schematic Diagram - Packed Solvent-Extraction Column

The chief advantages of solvent-extraction columns are the lack of mechanical complexity and the effective use of solvent made by virtue of their countercurrent method of contacting the phases.

3. Pulse Columns

Pulse columns are the solvent-extraction contactors chosen for the Purex Plant.

A pulsed perforated-plate column, originally described by Van Dijck,[5] was first investigated in connection with uranium separation, at Hanford, by C. Groot. It offers an important, often more than two-fold, reduction in column height from the heights needed with a conventional packed column. In such a column an up-and-down pulsing motion is superimposed on the net countercurrent flow of the liquid phases through a series of stationary, spaced, horizontal perforated plates.

As an alternative to the perforated plates, a pulse column may employ Raschig rings or other packing. The Purex-Plant columns, except the 2A

Column, employ perforated plates of various designs. The latter employs Raschig rings.

The upward and downward pulsing movement of the column contents through the plate perforations or packing interstices causes the perforated plates or packing to provide agitation resulting in more or less intimate mixing of the two countercurrently flowing phases. The performance characteristics of pulse columns as a function of design and operating conditions are discussed in more detail in Section C.

In the case of perforated-plate columns the pulsing also performs another important function in that it provides the means for countercurrent flow of the aqueous and organic phases. Experience indicates that the specific-gravity difference between the two phases is usually not sufficient to cause a significant countercurrent flow through the small holes in the perforated plates. Consequently, the net flow of the light phase up and the heavy phase down the column is caused almost entirely by the actions of the pulse generator and the stream pumps.

The most important advantage of pulse columns over packed columns is the fact that, for the same extraction duty, they can be made much shorter.(22) Additional advantages of pulse columns are a less pronounced dependence of extraction effectiveness (H.T.U. values) on throughput rate and, in the case of sieve-plate columns, the greater ease of a temporary shutdown and start-up with the property of very little flow through the plates in the absence of pulsing. The need of a pulse generator, with its first cost and maintenance requirements, is a disadvantage.

The Purex-Plant pulse-column designs are based on extensive development studies, at intermediate to full scale, at Hanford.(21) The radioactive pilot-plant process-development work for Purex at Oak Ridge National Laboratory was also done in pulse columns. Large pulse columns have been successfully used in uranium production installations in the Hanford Uranium Recovery Plant(23) and at the Feed Materials Preparation Center at Fernald, Ohio (operated for the A.E.C. by the National Lead Co. of Ohio).(32)

4. Special Terms

The terms defined in this subsection are those used frequently in discussing the operation or evaluating the performance of solvent-extraction columns. Convenient colloquial terms which have come into use for the Purex process are included in the following discussion.

4.01 Extraction, stripping, scrubbing

In connection with solvent extraction in the Purex process, the term extraction is used to describe mass transfer, notably of uranium and/or plutonium, from the aqueous to the organic phase as, for instance, in the lower section of the HA Column.

The term stripping is used to describe mass transfer of uranium or plutonium from the organic to the aqueous phase. Thus, in the HC Column uranium and plutonium are said to be stripped from the organic feed to the aqueous effluent stream.

The removal of fission products from a uranium or plutonium-bearing organic stream by contacting it with an aqueous stream is referred to as scrubbing. For example, scrubbing is carried out in the upper section of the HA Column. The removal of small residual amounts of uranium from the plutonium-bearing aqueous stream in the IBS Column by contacting with an organic stream is also referred to as scrubbing.

4.02 Simple and dual-purpose columns

A simple column is one designed to perform only one solvent-extraction function (extraction, scrubbing, or stripping). The Purex IC and IBS Columns are typical examples of simple columns in which the operations of uranium stripping and plutonium-stream scrubbing, respectively, are carried out. Other columns, such as the Purex IA Column, are designed to carry out two separate solvent-extraction functions and are therefore referred to as dual-purpose columns. In the IA Column uranium, plutonium, and some fission products are extracted into the solvent phase in the bottom half of the column, while in the upper section the fission products are scrubbed from the organic phase. The dual-scrub column is a further refinement of the dual-purpose extraction column. In this column a second scrub stream, possibly with a different chemical composition than the primary scrub stream, is introduced at an intermediate point in the scrub section. In the HA Column, for example, the primary or terminal scrub stream is water (acid free) which strips the nitric acid from the organic stream. The second or intermediate scrub stream contains nitric acid, which builds up the "salting" strength of the remainder of the scrub section and the extraction section.

4.03 Flooding

Flooding (or complete flooding) in a pulse column designates a typical behavior of the two liquid phases when flow rates are so high that the two phases cannot pass countercurrently through the column, with the result that one of the phases leaves the column at the same end at which it enters. The flooding capacity is the throughput rate at which an infinitesimal increase in flow rates results in flooding.

Local flooding in the column consists in an unusually large accumulation of dispersed phase at some location in the two-phase zone. It may appear as an accumulation of closely packed dispersed-phase globules or as a single large globule filling the space between two or more plates (two or more inches in diameter). If the local flooding tends to dissipate and re-form on a fairly frequent schedule, it is termed cyclic local flooding. In either case, if the local flood tends to maintain a given size (if the increased effective "head" of the dispersed phase is sufficient to cause the dispersed phase to flow through the column at a rate equal to the dispersed-phase flow rate entering the column), the column may be operated indefinitely and give satisfactory performance as an extraction unit.

4.04 Reflux (external and internal)

In solvent extraction, as in other diffusional processes, external reflux may be returned to the solvent-extraction column to enrich the extract concentration. For example, the concentration of plutonium in the Purex 2AP stream can be increased by using a portion of the 2BP stream in place of or together with the HNO_3-containing 2AS stream (see Figure V-11).

In some of the columns a portion of one or more of the solutes may be extracted in one part of the column and stripped in the other. This phenomenon is referred to as internal reflux. For example, in the HA Column extraction section, nitric acid is extracted into the organic phase at the bottom of the section and partially stripped back into the aqueous phase at the top. Also in the HA Column a portion of the uranium and plutonium in the organic phase is refluxed internally, being stripped from the organic phase in the scrub section and carried down the column by the HAS to the extraction section, where it is again extracted into the organic phase.

4.05 Amplitude and frequency

The pulse amplitude is the magnitude of the up-and-down motion of the pulse-column liquid contents, as measured between the extreme positions of the pulse, i.e., twice the distance between the mean position and an extreme.

The pulse frequency is the time rate of pulsing, expressed in cycles per minute.

The amplitude-frequency product is frequently used as a simple means of correlating the pulsing conditions with column performance. It is equal to the pulse amplitude times the frequency and is conveniently expressed in inches per minute.

4.06 Volume velocity

The term superficial volume velocity may be defined as the sum of the net volume flow rates of the two phases in the column divided by the total cross-sectional area of the enclosing column, neglecting the cross section of the column occupied by packing or plates. It is expressed in this manual in gal./(hr.) (sq.ft.), sum of both phases. The volume velocity for comparable performance in columns with like plates or packing but with different diameters is essentially constant. Volume velocity is used, therefore, to correlate the column performance (flooding and efficiency) with the flow rate.

4.07 Pulsed volume velocity

The pulsed volume velocity is simply the pulse amplitude-frequency product expressed in superficial volume-velocity units. In units of

gallons pulsed/(hr.) (sq.ft. of column cross section) it may be calculated by multiplying the pulse frequency (in cycles/hour) by the pulse displacement in gallons (employing the sum of the "up" plus "down" displacements) and then dividing by the column cross section in square feet. Alternatively, if the amplitude, a, and the frequency, f, are expressed in the usual units of inches and cycles/min., respectively, the pulsed volume velocity in gal./(hr.) (sq.ft.) is equal to

$$74.81\ af.$$

The pulsed volume velocity is directly proportional to both the pulse amplitude and the frequency.

4.08 Equilibrium and operating lines

An equilibrium line is a graphical representation of the equilibrium solute distribution between the phases for the chemical conditions existing in the countercurrent solvent-extraction contactors. The development of the phase equilibrium data for the Purex process is discussed in Chapter IV.

An operating line is a locus of points depicting the actual solute concentrations of the aqueous and organic phases at various heights within the column. The operating-line equation is developed from a solute material balance made around either end of a packed or plate section. Typical operating and equilibrium lines for the Purex columns and a discussion of their use in evaluating column performance are presented in Section B of this chapter.

4.09 Height equivalent to a theoretical stage (H.E.T.S.)

The mass-transfer effectiveness of solvent-extraction columns may be evaluated in terms of the height of contactor which is required to perform the same extraction as a single theoretical stage. A theoretical stage is achieved in a column when two influent streams (not at equilibrium) entering a section of the column mix and produce effluent streams which are in equilibrium with one another. For solvent-extraction columns containing several theoretical stages, the H.E.T.S. may be obtained by dividing the height of the contacting section by the number of theoretical stages required to accomplish the same extraction being carried out by the column.

Although the number of stages is generally obtained for the Purex process by the graphical method discussed in Subsection B3 of this chapter, it is possible when the equilibrium and operating lines are both straight to calculate the number of stages (N_s) by the following equation, which is similar to a form presented by Colburn:[1]

$$N_s = \frac{\ln [M(1-P) + P]}{\ln (1/P)} \quad \ldots\ldots\ldots\ldots\ldots\ldots \quad (1)$$

[redacted] [redacted]

where P = the extraction factor, the ratio of the slopes of the operating and equilibrium lines ($P = A/(mO)$ for extraction and $(mO)/A$ for stripping);

$$M = \frac{X_1 - Y_2/m}{X_2 - Y_2/m} \text{ for extraction and } \frac{Y_1 - X_2 m}{Y_2 - X_2 m} \text{ for stripping;}$$

A/O = slope of the operating line, (volume of aqueous phase per unit time) / (volume of organic phase per unit time);

m = slope of the equilbrium line, (concentration in the organic phase) / (concentration in the aqueous phase);

X = the solute concentration in the aqueous phase;

Y = the solute concentration in the organic phase.

Subscripts 1 and 2 refer to concentrated-end and dilute-end concentrations, respectively.

For the phase equilibrium relationships involved in the Purex process, as in the general case, the equilibrium lines are curved; therefore the slope is not constant, and the value of P varies. However, a close approximation of the number of stages may be obtained from the above equation by using an appropriate mean value for the slope of the equilibrium line.

4.10 Height of a transfer unit (H.T.U.)

The H.T.U., like the H.E.T.S., defined above, is a measure of the mass-transfer effectiveness of a solvent-extraction column. As compared with the H.E.T.S., it has certain correlation advantages, notably that in Purex-process systems it is less sensitive to variations in the numerical value of the extraction factor P.

The number of transfer units in the plate or packed sections of the Purex-process columns may be expressed by the following integrals:(1)

$$N_t \int_{X_2}^{X_1} \frac{dX}{X - X^*} \qquad \text{(for extraction)} \quad \ldots\ldots\ldots\ldots\ldots\ldots (2)$$

or

$$N_t \int_{Y_2}^{Y_1} \frac{dY}{Y - Y^*} \qquad \text{(for stripping)} \quad \ldots\ldots\ldots\ldots\ldots\ldots (3)$$

where N_t = the number of transfer units, over-all raffinate-film basis, for transfer from the raffinate to the extract phase;

X = the concentration of the diffusing component in the aqueous phase;

X^* = the concentration of the diffusing component in the aqueous phase in equilibrium with an organic phase of composition Y;

Y = the concentration of the diffusing component in the organic phase;

Y^* = the concentration of the diffusing component in the organic phase in equilibrium with an aqueous phase of composition X.

Thus the number of transfer units is an integrated ratio of the change in diffusing-component concentration to the concentration driving force which causes transfer between phases.

When the equilibrium and operating lines are both straight, as they frequently are at the dilute end of the column, the number of transfer units may be calculated from the following equation developed by Colburn:[1]

$$N_t = \frac{\ln [M(1-P)+P]}{1-P} \quad \ldots\ldots\ldots\ldots\ldots\ldots\ldots \quad (4)$$

where M and P are defined in 4.09, above.

Approximate N_t values may be obtained when the equilibrium and operating lines are not both straight by using an appropriate mean value of P. Such a value may be approximated by dividing the abscissa (or ordinate) of a logarithmic operating diagram between X_1 and X_2 (or Y_1 and Y_2) into a number of equally spaced segments, determining the P value for each segment, and using the average of the P values so determined for the mean value of P to be used in the equation. Frequently the mean P value may be determined by inspection for a particular system after a few rigorous N_t calculations for the system have been made. Modifications of Colburn's basic equation have been made for use when the equilibrium line is curved; they may be found in Perry's Chemical Engineers' Handbook[3] and elsewhere.

The over-all H.T.U. is calculated by dividing the "packed" height by the number of transfer units calculated by one of the above equations. The over-all H.T.U. (based on the raffinate-phase film) includes contributions of both the individual raffinate and extract-film H.T.U.'s, which are related by the following equation:

$$H.T.U._{OR} = (H.T.U._R) + (P)(H.T.U._E) \quad \ldots\ldots\ldots\ldots\ldots\ldots \quad (5)$$

where R and E refer to the raffinate-phase and extract-phase films, respectively, and P is the appropriate extraction factor, defined in 4.09, above. It is seen from this equation that if the individual-film H.T.U.'s are largely independent of P (as is often believed to be the case) the over-all value will likewise be independent whenever P is negligible (when P is less than about 0.1). As P increases from 0.1 to 1, the term $(P)(H.T.U._E)$ becomes increasingly significant, so that more significant variation of the over-all H.T.U. values with P might be expected in this region. The mean P values, calculated by Colburn's equation, for the Purex extraction and stripping columns operating under HW #3 Flowsheet conditions are less than 0.1, with the exceptions of the HC, IC, 2E, and 2A Columns, which have P values between 0.1 and 0.2, and the IBX Column, which has a P value of about 0.3.

4.11 Relation between H.T.U. and H.E.T.S.

By combining the integrated expressions for N_t and N_s presented under 4.09 and 4.10, above, it is found that the H.E.T.S. and H.T.U. are theoretically related by the following equation, which is rigorously correct only for straight operating and equilibrium lines:

$$\frac{H.E.T.S.}{H.T.U.} = \frac{\ln(1/P)}{1-P} \quad \ldots\ldots\ldots\ldots\ldots\ldots\ldots \quad (6)$$

where P is the extraction factor, defined under 4.09, above. For operating lines which are both straight and parallel, the value of P is one; and, although the above equation reduces to an indeterminate form, it can be demonstrated that the H.E.T.S. equals the H.T.U. As the relative slopes of the operating and equilibrium lines are changed so that these lines diverge more and more, the numerical value of P becomes progressively smaller than unity, and the H.E.T.S. becomes progressively larger than the H.T.U. For curved operating and/or equilibrium lines, the equation applies as an approximation, provided appropriate mean values for the slopes of these lines are chosen.

4.12 "Pinching" flow ratio

The "pinching" flow ratio may be defined as the lowest extractant-to-feed phase flow ratio theoretically sufficient for transfer of all of the solute in the feed into the extract, leaving none in the raffinate, when the number of theoretical stages or transfer units is infinite. A "pinch" occurs when the actual solute concentrations in the two phases at some point in the column are equal to the equilibrium concentrations (i.e., with the notation introduced under 4.10, above, $X-X^* = 0$, or $Y-Y^* = 0$). This condition is shown graphically on an operating diagram by the equilibrium and operating lines intersecting or touching.

The practical significance of the pinch in connection with operation of the Purex-Plant columns is discussed in Section B.

B. THE OPERATING DIAGRAM (H.E.T.S. AND H.T.U CALCULATIONS)

1. Introduction

The purpose of this section is to discuss the calculation procedures and operating diagrams used in evaluating the solvent-extraction performance of the Purex columns. Examples of the H.E.T.S. and H.T.U. calculation methods used for evaluation of typical HA and HC Column runs are demonstrated in Subsection B3. Although sample calculations have not been included for all Purex columns, typical Pu, U, and HNO_3 operating diagrams are included for all Purex columns in Figures V-1 through V-11.

The concept of the minimum, or "pinching", extractant-to-raffinate flow ratio is developed from operating-diagram considerations. Graphs for the calculation of the pinching flow ratios for the Purex A and C-type columns, showing the effect of feed and extractant compositions, are presented as Figures V-12 and V-13.

The operating diagrams discussed in this chapter are X-Y plots (somewhat similar to the McCabe-Thiele diagram used in distillation calculations) with X and Y axis values depicting aqueous-phase and organic-phase concentrations, respectively. Each of the diagrams includes an X-Y equilibrium line for the diffusing component and an operating line with influent and effluent streams labeled. The operating diagrams are used for calculating the number of equivalent theoretical stages or the number of transfer units required for the desired extraction. From the operating diagrams a quantitative or qualitative analysis may be made of the effects which changing operating variables have on the extraction effectiveness of the separation. On the HA and HC uranium operating diagrams (Figs. V-1 and V-3), parameters are included which show the effect of nitric acid concentration on phase equilibria.

2. Operating-Line Equations

The units used for constructing the Purex operating diagrams were grams (or mols) of diffusing component per liter of solution. By neglecting the change in volume which occurs because of the transfer of uranyl nitrate and nitric acid, a linear operating line may be obtained. For the HA Column extraction section the uranium or plutonium operating line may be derived by a material balance around the bottom end of the column, as indicated by the schematic diagram and equations below:

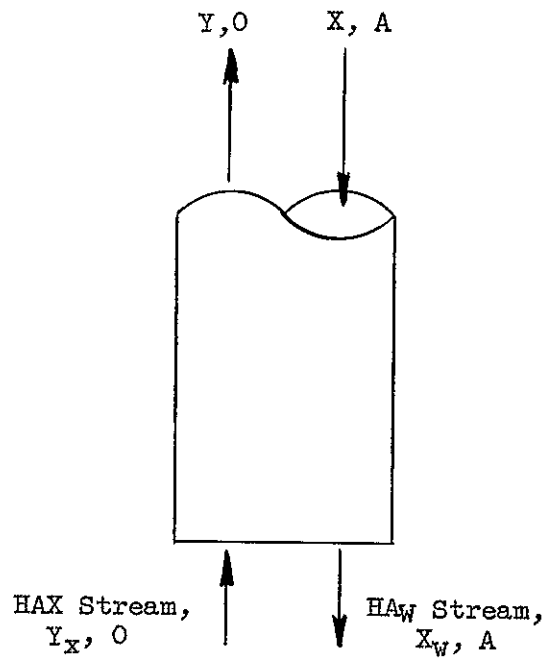

Values of X and Y indicate the solute concentrations in the aqueous and organic phases, respectively; values of A and O indicate the volume flow rates of the aqueous and organic phases, respectively.

At steady-state operating conditions, the weight of diffusing solute entering the above section of column over a given time period via the aqueous and organic streams must equal the weight of solute leaving via the effluent streams. The weight of solute carried by each of the four flowing streams in unit time is the product of the flow rate times the solute concentration: Y_xO, X_wA, YO, and XA, respectively. Thus a material balance equation for uranium may be written by equating the influent flow of uranium to the effluent flow of uranium, as follows:

$$XA + Y_xO = YO + X_wA \quad \ldots\ldots\ldots\ldots\ldots\ldots\ldots \quad (7)$$

Solving Equation (7) for Y gives the following equation, which represents a straight line in terms of Y and X if A/O, Y_x, and X_w are constants:

$$Y = (A/O)\ X + Y_x - (A/O)\ X_w \quad \ldots\ldots\ldots\ldots\ldots\ldots \quad (8)$$

The use of the above operating line is illustrated in B3.1, below, and in Figure V-1.

Operating lines for the other Purex columns are developed in an analogous manner. For example, the equation for the HA Column scrub-section operating line is

$$Y = (A/O)\ X + Y_p - (A/O)\ X_s \quad \ldots\ldots\ldots\ldots\ldots\ldots \quad (9)$$

and for the HC Column the operating-line equation is

$$Y = (A/O)\ X + Y_w - (A/O)\ X_x \quad \ldots\ldots\ldots\ldots\ldots\ldots\ldots \quad (10)$$

where the subscripts denote the following streams:

p = uranium or plutonium product streams;
s = scrub stream;
w = waste stream;
x = extractant stream.

3. Example H.E.T.S. and H.T.U. Calculations

3.1 Example H.E.T.S. calculation for HA Column extraction section

Outlined below is the graphical stage step-off computation of the number of stages (and the H.E.T.S.) for uranium transfer in the HA Column extraction section. The operating conditions chosen for this example approximate those shown in the Purex HW #3 Flowsheet,(25) presented in Chapter I.

The following data will be assumed to have been taken during the steady-state period of a typical run in a column having a 13.5-ft.-high perforated-plate extraction section:

Stream	Volume, Liters	U Concentration, G./L.	HNO_3 Concentration, M
HAF	2000	321	2.0
HAS	667	0	0
HAIS	667	0	4.6
HAX	7320	0.0002	0
HAP	7560	85.0	0.02
HAW	3120	0.0030	2.2

The operating diagram for this hypothetical run is plotted in Figure V-1. The operating lines were derived from the equations presented in B2, above, as follows:

Top scrub section:

$$Y = (A/O)_s\ X + Y_p - (A/O)_s\ X_s \quad \ldots\ldots\ldots\ldots\ldots\ldots\ldots \quad (9)$$

$$= \frac{667}{7560}\ X + 85.0 - 0$$

$$= 0.088\ X + 85.0$$

Intermediate scrub section:

$$Y = (A/O)_{is}\, X + Y_p - \frac{A_{is}\, X_{is} + A_s\, X_s}{O_{is}}$$

$$= \frac{1334}{7560}\, X + 85.0 - 0$$

$$= 0.176\, X + 85.0$$

Extraction-section average operating-line slope:

$$(A/O)_x = \frac{1}{2}\left[\frac{HAF + HAS + HAIS}{HAP} + \frac{HAW}{HAX}\right]$$

$$= \frac{1}{2}\left[\frac{3334}{7560} + \frac{3120}{7320}\right] = 0.434$$

$$Y = (A/O)_x\, X + Y_x - (A/O)_x\, X_w \quad \ldots\ldots\ldots\ldots\ldots\ldots\ldots \quad (8)$$

$$= 0.434\, X + 0.0002 - 0.434\,(0.0030)$$

$$= 0.434X - 0.00110$$

The equilibrium lines chosen from the family of curves in Figure V-1 are dependent upon the salting strength of HNO_3 in the aqueous phase throughout the column. The nitric acid gradient in the column was determined in this example by stepping off the nitric acid and uranium stages together, starting from each end of the column (see Figure V-2 for the HNO_3 operating diagram). The equilibrium lines were drawn, then, by connecting the equilibrium points of each theoretical stage. It usually is not necessary to use such an elaborate method to draw an A-type column equilibrium line, since the shape of the equilibrium line for other run conditions is similar to the one shown in Figure V-1. Thus, by knowing the end conditions in the column, a satisfactory equilibrium line for the entire column may be estimated.

Before the number of stages in the extraction section can be calculated, the composition of the aqueous and organic phases at the top of the extraction section must be determined. Since the HA Column is a dual-purpose column, the organic phase leaving the extraction section is the influent to the scrub section and the aqueous effluent from the scrub section mixed with the HAF is the influent to the extraction section. By referring to the insert graph in Fig. V-1 it can be seen that the organic and aqueous phases at the bottom of the scrub section are essentially at equilibrium; thus the organic-phase composition at the bottom of the scrub section (or top of the extraction section) is found at the intersection of the scrub-section operating and equilibrium lines (the uranium equilibrium line for the bottom scrub section for the Purex HW #3 Flowsheet is approximately the 3 M HNO_3 equilibrium parameter). After the organic composition is determined, the stage step-off procedure can either be started (preferable) or terminated at this value of Y.

In this example, exactly three stages were stepped off; therefore the H.E.T.S. is 13.5/3.0 or 4.5 ft. In the more usual case where the number of stages is not an exact integer, the magnitude of the fractional stage remaining may be calculated by using Colburn's equation (Equation (1)) or by interpolating with a linear scale on the logarithmic operating diagram, as illustrated in Stage 3 of Fig. V-1.

3.2 Example H.T.U. calculation for HA Column extraction section

The operating and equilibrium lines developed and shown in Fig. V-1 for the above H.E.T.S. calculation will also be used for the following example H.T.U. calculation.

The number of transfer units (over-all aqueous-film basis) in the HA Column extraction section may be obtained by suitable methods of integrating the expression

$$N_t = \int_{X_2}^{X_1} \frac{dX}{X-X^*} \quad \text{.....(2)}$$

explained under A4.10, above. For the HA Column, the equilibrium line is of irregular curvature with a considerable deviation at high uranium concentrations from the simple relationship $Y = mX^*$ which was used to derive Colburn's integrated equation for N_t:

$$N_t = \frac{\ln [M(1-P) + P]}{1-P} \quad \text{.....(4)}$$

A close approximation to the number of transfer units may be obtained by using Colburn's equation for the dilute portion of the column and by graphically integrating Equation (2) for the concentrated portion of the column. Though "counting the squares" is the most accurate method of graphical integration, several approximate methods of integration - such as Simpson's Rule -- are available and require much less time to calculate than counting the squares. Simpson's Rule will be illustrated in the following example:

(a) Dilute-region transfer units by Colburn's equation: Equation (4), above, is used for the dilute-region transfer-unit calculations. In this equation

$$M = \frac{X_1}{X_2} = \frac{10}{0.0030} = 3333$$

$$P = \frac{A/O}{m} = \frac{0.434}{22} = 0.020$$

$$N_t \Big]_{0.003}^{10} = \frac{\ln[M(1-P) + P]}{1-P} = \frac{\ln\ [(3333)\ (0.980) + 0.02]}{0.980} = 8.26$$

(b) Concentrated-region transfer units by graphical integration: In graphically integrating Equation (2), values of X and X^* are obtained by drawing constant Y lines on the operating diagram (Fig. V-1) and reading the corresponding values of X and X^* at the intersections of the constant Y lines with the operating and equilibrium lines, respectively. These data, determined at X values suitable for use with Simpson's Rule, are tabulated below.

X	X^*	y, $1/(X-X^*)$	h	$A = (h/3)(y_0 + 4y_1 + y_2)$
10	0.12	0.1012		
15	0.18	0.0675	5	0.703
20	0.26	0.0507		
30	0.40	0.0338	10	0.704
40	0.59	0.0254		
70	1.3	0.0146	30	0.940
100	2.4	0.0102		
150	5.4	0.00692	50	0.720
200	12.4	0.00533		
			$\sum A$ =	3.067

$$N_t \Big]_{10}^{200} = \int_{10}^{200} \frac{dX}{X-X^*} = \sum A = 3.07$$

(c) H.T.U.: The total number of transfer units in the HA Column extraction section is found by addition of the results obtained under (a) and (b):

$$N_t \Big]_{0.003}^{200} = N_t \Big]_{0.003}^{10} + N_t \Big]_{10}^{200} = 8.26 + 3.07 = 11.33$$

The H.T.U. is found by dividing the 13.5-ft. plate-section height by the number of transfer units:

$$\text{H.T.U.} = \frac{13.5}{11.33} = 1.19 \text{ ft.}$$

(d) Calculation of N_t using an average P in Colburn's equation:

If an average m, or equilibrium-line slope, equal to 20 is assumed for the entire column, we find that

$$P = \frac{0.434}{20} = 0.022$$

$$M = \frac{200}{0.0030} = 66,700$$

and $$N_t = \frac{\ln [(66,700)\ (0.978)]}{0.978} = 11.08$$

and $$\text{H.T.U.} = \frac{13.5}{11.08} = 1.22$$

The percent error in N_t, using the simplification, is

$$\frac{(100)\ (11.33 - 11.08)}{11.33} = 2.2\%$$

3.3 Example H.E.T.S. calculation for HC Column

Outlined below is the graphical stage step-off H.E.T.S. method used for evaluating the uranium stripping performance of the Purex HC Column operating at conditions approximating the Purex HW #3 Flowsheet.

The following data will be assumed to have been taken during the steady-state portion of a typical pilot-plant run in a column having an 18-ft.-high plate section:

Stream	Volume, Liters	U Concentration, G./L.	HNO_3 Concentration. M
HCF	7,560	85.0	0.02
HCX	13,320	0	0.01
HCP	13,530	47.5	0.021
HCW	7,320	0.0067	0

The operating diagram for this hypothetical run is plotted in Figure V-3. The operating line was derived from Equation (10) as follows:

$$Y = (A/O)X + Y_w - (A/O)X_x \quad \ldots\ldots\ldots\ldots\ldots\ldots\ldots (10)$$

The average operating-line slope is

$$\frac{A}{O} = \frac{1}{2}\left[\frac{HCX}{HCW} + \frac{HCP}{HCF}\right]$$

$$= \frac{1}{2}\left[\frac{13,320}{7,320} + \frac{13,530}{7,560}\right]$$

$$= 1.80_5$$

Thus, $$Y = 1.80\ X + 0.0067 - 0$$

The equilibrium line, which is dependent on the nitric acid concentration, was determined by stepping off the nitric acid and uranium stages together, starting from the concentrated end of the column (see Fig. V-4 for the HNO_3 operating diagram). An investigation of nitric acid transfer shows that approximately 90 per cent of the HNO_3 entering in the feed to the C-type columns is transferred to the aqueous phase in the first theoretical stage with most of the remaining HNO_3 in the organic phase transferring in the second stage. Thus it isn't necessary in most cases to draw an HNO_3 operating diagram to determine the position of the uranium equilibrium line.

In this example, exactly four stages were stepped off; therefore, the H.E.T.S. is 18.0/4.0 = 4.5 ft. The magnitude of any fractional stage remaining after the step-off procedure can be calculated as in B3.1 by Colburn's equation for N_s or by a linear interpolation on a logarithmic operating diagram.

3.4 Example H.T.U. calculation for HC Column

The number of uranium transfer units (over-all organic-film basis) in the HC Column may be obtained by using a suitable method of integrating the basic equation

$$N_t = \int_{Y_2}^{Y_1} \frac{dY}{Y-Y^*} \quad \ldots\ldots\ldots\ldots\ldots\ldots\ldots\ldots (3)$$

discussed under A4.10, above. The operating diagram (Fig. V-3) developed in B3.3, above, will be used for this calculation. Since the equilibrium line has considerable curvature, it would be difficult to determine an appropriate value for the extraction factor, P, to be used in Colburn's equation. Therefore, the calculation is broken into two parts, as was the HA Column calculation, with the number of transfer units in the dilute

region calculated by classical integration and the N_t in the concentrated region calculated by graphical integration, using Simpson's Rule.

(a) Dilute-region transfer units by classical integration: In the dilute region of the column, from the value of Y_w (0.0067 g.U/l.) to Y = 4 g.U/l., the value of Y* becomes negligible in comparison with Y. Thus,

$$N_t \Big]_{0.0067}^{4.0} = \int_{0.0067}^{4.0} \frac{dY}{Y-Y^*} \cong \int_{0.0067}^{4.0} \frac{dY}{Y} = \ln \frac{4.0}{0.0067} = 6.39$$

(b) Concentrated-region transfer units by graphical integration: In evaluating the integral

$$N_t \Big]_{4.0}^{85.0} = \int_{4.0}^{85.0} \frac{dY}{Y-Y^*}$$

values of Y and Y* are found from Fig. V-3 at the intersection of appropriate constant X lines with the operating and equilibrium lines, respectively. These data, obtained at suitable Y intervals to be used in Simpson's Rule, are tabulated below.

Y	Y*	y, 1/(Y-Y*)	h	A = (h/3)($y_0 + 4y_1 + y_2$)
4	0.06	0.254		
7	0.18	0.147	3	0.946
10	0.40	0.104		
15	1.02	0.0715	5	0.742
20	1.9	0.0552		
30	5.1	0.0402	10	0.839
40	12	0.0357		
62.5	30	0.0308	22.5	1.377
85	44.5	0.0247		
			$\sum A$ =	3.804

[redacted]

[redacted]

$$N_t \Big]_{4.0}^{85.0} = \sum A \cdot = 3.80$$

(c) H.T.U.:
Total N_t = 6.39 + 3.80 = 10.19. The H.T.U. is therefore 18.0/10.19 = 1.77 ft.

4. Operating Diagrams for Purex Columns

Uranium, plutonium, and nitric acid operating diagrams for all columns are presented in Figs. V-1 through V-11. They are drawn using Purex HW #3 Flowsheet conditions and with the minimum integral number of stages necessary to give a 0.1 per cent U and/or Pu waste loss per column.

The operating diagrams were drawn as outlined in Subsection B3, above, by assuming that one U stage is equivalent to one HNO_3 stage and also equivalent to one Pu stage. This simplification is not rigorously correct for solvent-extraction columns, but its use simplifies calculation somewhat and introduces only a slight error in the true position of the equilibrium lines. Since transfer-unit heights for different components are likely to be more nearly equal than stage heights, a more nearly correct stagewise equivalence can be approximated by the use of Colburn's relationship:

$$N_t = N_s \frac{\ln(1/P)}{1-P} \quad \text{.....(6)}$$

If we let the N_t for component A be equal to the N_t for component B (as will most likely be the case in a differential contact operation), then

$$\frac{(N_s)_A \ln 1/P_A}{1-P_A} = \frac{(N_s)_B \ln 1/P_B}{1-P_B}$$

or

$$\frac{(N_s)_A}{(N_s)_B} = \left[\frac{1-P_A}{1-P_B}\right]\left[\frac{\ln P_B}{\ln P_A}\right] \quad \text{.....(11)}$$

For example, in the concentrated portion of the HA Column the extraction factor for Pu is about four times the extraction factor for U. Thus, if we let A in Equation (11) refer to Pu and B refer to U, and if we let the average extraction factor for U be 0.05, we find that

$$(N_s)_{Pu} = (N_s)_U \frac{(1-0.2)(\ln 0.05)}{(1-0.05)(\ln 0.2)} = 1.57\ (N_s)_U$$

5. Stage and Transfer-Unit Requirements for Purex Columns

As discussed earlier in this chapter, the number of stages and transfer units are measures of the difficulty of the extraction duty performed by a

solvent-extraction contactor. The number of theoretical stages and transfer units required to attain 0.1% waste losses for uranium and plutonium extraction in the various Purex columns have been determined from the operating diagrams presented in Figs. V-1 through V-11 and are summarized in the following table:

NUMBER OF THEORETICAL STAGES AND TRANSFER UNITS FOR ALL PUREX SOLVENT-EXTRACTION COLUMNS

Column	Number of Theoretical Stages		Number of Transfer Units	
	U	Pu	U	Pu
HA Extn.	2.0	2.6	7.0	7.2
HC	3.5	2.3	7.7	7.2
IA Extn.	2.0	2.6	7.0	7.2
IB Extn.	---	ca. 6 (b)	---	ca. 10 (b)
IB Scrub	2.7 (a)	---	10.0(a)	---
IC	4.1	---	8.1	---
2A Extn.	---	3.8	---	7.1
2B	---	2.1	---	7.0
2D Extn.	2.0	---	7.0	---
2E	3.5	---	7.7	---

Notes:

(a) 0.1% U in Pu, or 5.7×10^{-5}% U loss based on U in HAF.
(b) Based on m = 0.02. (The value of m is known only approximately.)

From the required number of stages or transfer units, the "packed" height of each column may be calculated if values of the H.E.T.S. or H.T.U. which are applicable to the operating conditions of the column are known.

6. Minimum Extractant-to-Raffinate Flow Ratios

6.1 General

The theoretical minimum required, or "pinching", extractant-to-feed flow ratio has been defined in A4.12, above. It is possible to differentiate between two types of "pinch": (a) the dilute-end pinch, which occurs when the extractant contains a small amount of the product material or when an "inextractable" species of the product material is present in the feed, and which may be relieved only partially, or not at all, by increasing the flow ratio; and (b) the concentrated-end pinch, which may always be relieved by increasing the extract-to-raffinate flow ratio. It is this latter type of pinch with which we are concerned in the following discussion.

As indicated under 6.2 and 6.3, below, the minimum extractant-to-feed flow ratios actually needed in the Purex-Plant extraction and stripping

columns to avoid high losses are somewhat (typically 10 to 50%) higher than the theoretical minimum ratios, due to non-uniformities in flow in different portions of the column cross section (viz., channeling and back-mixing effects).

The selection of an advantageous flow ratio generally involves judicious compromise. For, while unacceptably high losses result from an excessively low extractant-to-feed flow ratio, an excessively high ratio generally also has disadvantages. Thus, in the A-type columns an excessively high organic extractant rate impairs decontamination performance, as discussed in Section F, in addition to increasing the throughput-rate load on both the column in question and the associated C-type column (also the IB Columns in case of IA). In the case of C-type column a high aqueous-extractant rate correspondingly increases the evaporation load on the associated uranium concentrators. Figures V-12 and V-13, along with the discussion under 6.2 and 6.3, below, are intended to assist in the selection of advantageous flow ratios to be employed in the operation of the Purex-Plant A-type and C-type columns for a variety of potential operating conditions.

6.2 Minimum flow ratio in the A-type columns

Figure V-12 may be used to calculate the theoretical minimum, or pinching, flow ratio for the A-type columns (HA, IA, and 2D) when operated under a wide variety of flowsheet conditions. This graph shows the interrelation between the uranium concentration in the feed and the scrub-volume-flow to uranium-mass-flow ratio. The points for the curves were determined by calculating the flow ratio which would produce a pinch with the aqueous-phase concentration at the feed point, which in turn is found by adding the uranium refluxed in six (assumed) scrub stages to the feed uranium. Correction factors are included with the figure to correct for the smaller amount of uranium which would be refluxed with only three scrub stages and to correct for small variations in TBP concentration. No correction has been made for variations in aqueous-phase nitric acid concentration; the curves should be adequate for feed-point HNO_3 concentrations ranging from 2 to 4 M. The curves were calculated for a single-scrub column (IA), but they should be applicable as well to dual-scrub columns, provided that the sum of the top and intermediate scrub-stream flow rates is used as the "HAS" flow rate.

The following example illustrates the use of Fig. V-12, assuming the operating conditions shown below:

HAF composition: 1.35 M U, 2.0 M HNO_3

HAS-to-U ratio: 0.249 gal./lb. (Purex HW #3 Flowsheet)

Starting with the X_f (HAF) U concentration, a line is drawn horizontally to intersect the 0.249 HAS/U line; this gives the X_{fs} uranium concentration (0.98 M), assuming six scrub stages. From this intersection, a line is extended vertically to intersect the "pinching O/A vs. X_{fs}" line. The value of the pinching O/A (1.86) may be read by drawing a line horizontally from this intersection to the ordinate axis. The course of this example is indicated in Fig. V-12 by a dotted line.

The actual extractant-to-raffinate flow ratio to be used in the column should be about 10 to 20 per cent greater than the pinching flow ratio determined in the above procedure. This safety margin is required to prevent high losses due to insufficient transfer units or to phase channeling.

6.3 Minimum flow ratio in the C-type columns

The effect of feed and extractant stream compositions on the pinching extractant-to-raffinate flow ratio in the C-type columns (HC, IC, and 2E) is shown in Fig. V-13. An auxiliary graph is added as a variable ordinate axis to correct for the effect of increased temperature. Correction factors for use with TBP concentrations differing slightly from 30% are also included. Points for the curve were calculated by determining the flow ratio at which the operating line drawn through the origin would become tangent to the equilibrium line at the indicated feed U concentration. This correlation neglects the effect that nitric acid introduced with the feed has on the equilibrium line. If this quantity is appreciable it will produce an "apparent" pinch at the feed end of the column which is readily relieved (within one or two transfer-unit heights) as the nitric acid transfers to the extract (aqueous) phase and leaves the column.

The use of Fig. V-13 to determine operating conditions for the C-type columns may be illustrated by the following example for which the conditions shown below are assumed:

HCF composition:	0.357 M ~~HNO_3~~ UNH, 0.02 M HNO_3
HCX composition:	0.01 M HNO_3
HC Column temperature:	45° C.

Starting with the Y_f (HCF) uranium concentration, a line is drawn vertically to intersect the 0.01 M HNO_3 HCX parameter. From this intersection, a line is extended horizontally to intersect that ordinate which applies for the 45°C. column temperature. The pinching HCX:HCF flow ratio (0.92) may be read by interpolating between the pinching A/O parameters. The course of this example is traced by dotted lines in Fig. V-13.

The actual extractant flow rate used in the column is normally in the neighborhood of 1.5 times the pinching value obtained in the above example, though a lesser safety factor may sometimes suffice. The safety margin is provided to offset the relatively poor extraction factor at the concentrated end of the column and to minimize the adverse effect of channeling.

C. PULSE-COLUMN VARIABLES

1. General Performance Characteristics of Pulse Columns

1.1 Phase-dispersion patterns

Three distinct types of phase-dispersion behavior have been observed in pulse columns as a function of the throughput rate and the pulsing conditions (frequency at any given pulse amplitude).

Mixer-settler-type operation (Figure V-14a), occurring at low throughput rates and frequencies, is characterized by the separation of the light and heavy phases into discrete, clear layers in the interplate space during the quiescent portions of the pulse cycle. During the upward portion of the pulse movement, the light phase initially resting under the sieve plate is forced up through the perforations and rises in fairly large globules through the heavy-phase layer above the plate (typically 1/8-in. to 1/4-in.-diameter globules for 1/8-in.-diameter holes in the plates). Similarly, the heavy phase descends during the downward movement of the pulse. Under mixer-settler-type phase-dispersion conditions the operation of the pulse column is highly stable but relatively inefficient compared with operation of the same column under emulsion-type conditions.

Emulsion-type operation (Figure V-14b), occurring at higher throughput rates and frequencies, is characterized by small drop size (typically about 1/16 in. or less in diameter) and fairly uniform dispersion of the discontinuous phase, with little change in phase dispersion in the course of the pulse cycle. The intimate interphase contact (high interfacial contact area per unit volume) renders this the most efficient type of operation.

Unstable operation (Figure V-14c), occurring at still higher throughput rates and frequencies, is characterized by mixtures of fine and coarse dispersed-phase drops, formation of large irregular-shaped globs of dispersed phase by coalescence, and periodic reversals of the continuous phase in short sections of the column (cyclic local flooding). The efficiency of the column in the unstable operating region is generally poorer than in emulsion-type operation and often fluctuates widely.

As the throughput rate or the frequency is increased still further, beyond the unstable region, complete flooding eventually results. This is defined as the exit of one of the entering streams through the effluent line intended for the other phase.

The changes in phase-dispersion behavior accompanying changes in frequency or throughput rate involve gradual blending of one type of operation into another, rather than abrupt transitions.

1.2 Conditions of stable operation

As indicated by the sketch below, the operation of a pulsed sieve-plate column is markedly different from that of a packed column in that no significant countercurrent flow can be obtained in a pulse column (with the sieve-plate designs normally chosen) unless the column contents are pulsed. At low frequencies the capacity of the column is equal to the pulsed volume velocity (defined under A4.07, above) and thus increases in proportion to the arithmetic product of the amplitude and the frequency, a x f, or, at constant amplitude, in proportion to the frequency, f. As the amplitude-frequency product, e.g., the frequency at constant amplitude, increases further, the flooding capacity becomes increasingly lower than the pulsed volume velocity. After passing through a maximum the flooding capacity decreases with further increases in the frequency (or amplitude-frequency product).

The stability and phase-dispersion behavior pattern of a pulsed sieve-plate column as a function of flow and pulse conditions is illustrated by the figure below.

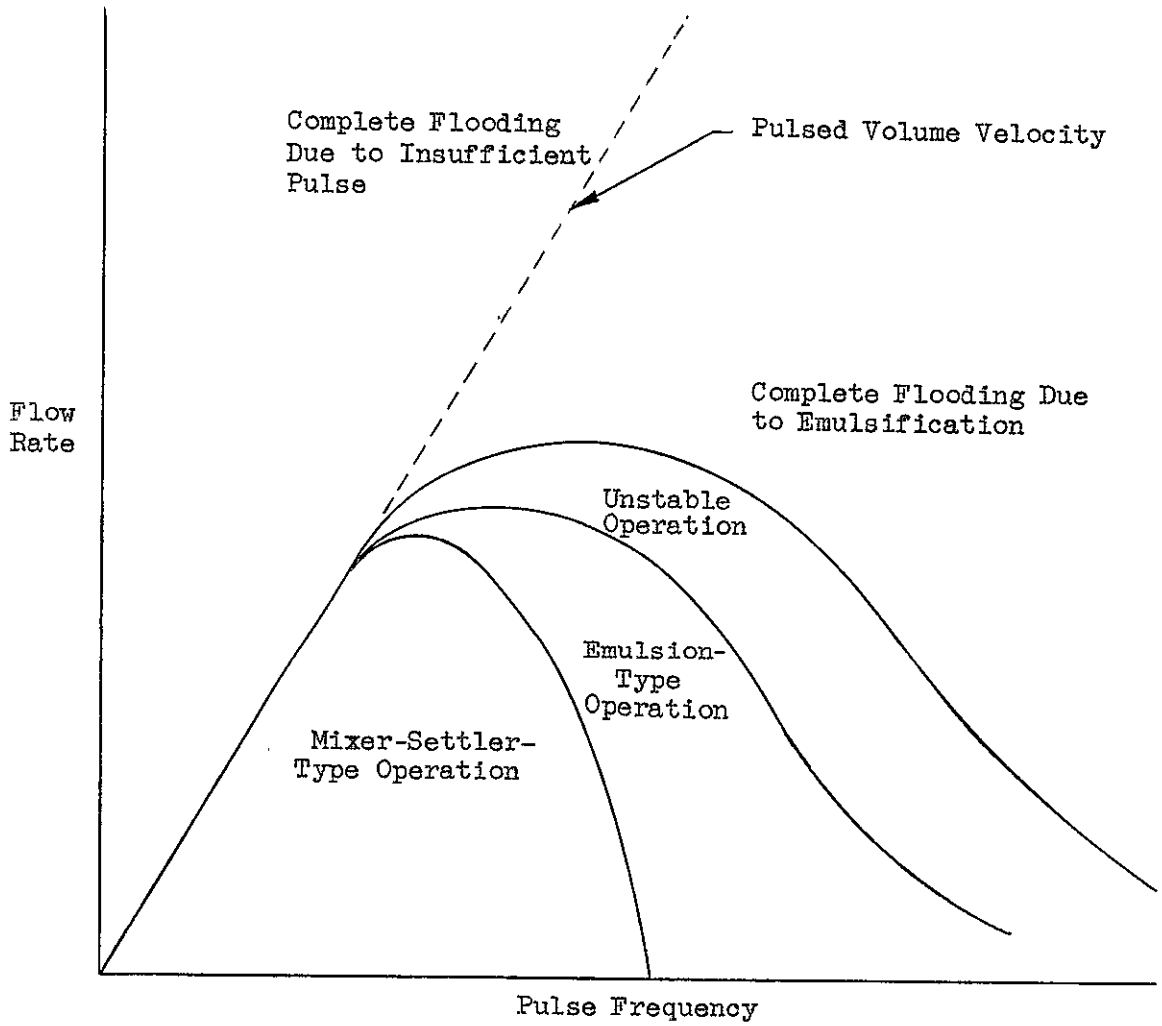

Stability and Phase Dispersion Pattern Of Pulsed Sieve-Plate Column

A pulse column in which Raschig-ring packing is used in lieu of sieve plates (as in the case of the 2A Column, discussed in Section E, the only such column in the Purex Plant) exhibits a stability and phase-dispersion behavior pattern differing from that described above in that (a) mixer-settler-type operation is not encountered (the phase dispersion at low

frequencies being of a coarse emulsion type); and (b) the pulsed-volume-velocity limitation on throughput rate at low pulse amplitude-frequency products, characteristic of sieve plates, has no counterpart with pulsed Raschig-ring columns. The unpulsed flooding capacity of a Rashig-ring-packed column generally increases with the application of a pulse of low amplitude-frequency product, but as the amplitude-frequency product increases the throughput capacity of the column passes through a maximum, after which it decreases with further increase in pulse.

1.3 Main factors affecting performance

The factors affecting the performance of a pulse column may be divided into two broad groups: (a) those which may be varied in the course of operation of a column of a fixed design ("operating variables") and (b) those which are fixed by design of the column or of the associated pulse generator ("design variables").

The important operating variables are pulse frequency; volume velocity; flow ratio of the liquids; solute concentration; physical properties of the liquids (notably specific gravities, viscosities, interfacial tension, diffusivity), including properties dependent on the choice of the diluent for the TBP; and temperature. The effects of these operating variables on pulse-column extraction effectiveness and throughput capacity are briefly reviewed in Subsection C2, below, and are discussed in more detail for the several Purex-Plant columns in Section E.

The more important variables fixed by design of the Purex-Plant columns and pulse generators are pulse amplitude; choice of the continuous phase; nature of the column internals (sieve plates, sieve and louver plates, Raschig rings); wetting characteristics of the column internals; sieve-plate geometry (hole size, plate spacing, free area, hole clearance) and the geometry of internals other than sieve plates, where used; height of the plate or packed section; column diameter; and pulse wave shape. The general effects of these design variables on pulse-column extraction effectiveness and throughput capacity are outlined in Subsection C3, below. The considerations which have led to the designs adopted for the several Purex-Plant columns are indicated in Section D.

2. Effect of Operating Variables on Extraction and Capacity

The purpose of this subsection is to indicate the direction and order of magnitude of the effects of the more important operating variables on the extraction effectiveness and capacity of pulse columns. For specific data on the performance characteristics of the several Purex-Plant columns, as affected by these variables, the reader is referred to Section E.

2.1 Frequency

The effect of pulse frequency on the throughput capacity of a pulse column has been discussed under 1.2, above.

Within the region of stable operation, H.T.U. values generally decrease sharply (often over 3-fold) with increasing amplitude-frequency products, as a function of the gradual transition from mixer-settler-type to increasingly

intimate emulsion-type phase dispersion. On the threshold of unstable operation there is sometimes a slight reversal of the trend to lower H.T.U. values with increasing pulse, as a result of incipient coalescence of the dispersed phase. The shapes of the H.T.U.-vs.-frequency plots vary with the system and plate design. Most frequently the curves are convex downward as illustrated below.

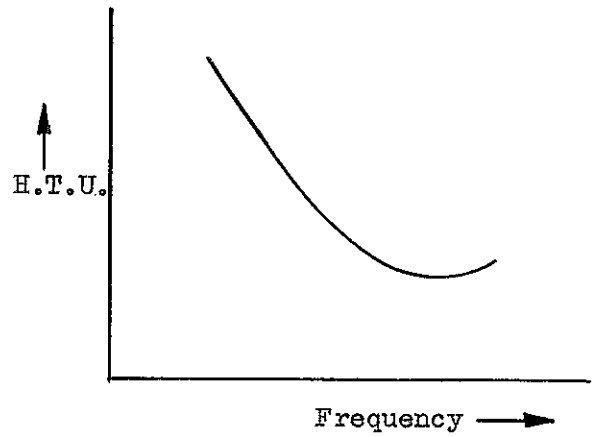

Experience indicates that frequencies giving near-optimum performance generally lie somewhere in the range from 75 to 95% of the flooding frequency. If local flooding occurs at a frequency significantly lower than the complete flooding frequency, optimum extraction performance is generally found at frequencies just below those which cause local flooding. Optimum frequencies for the Purex-Plant columns, which employ fixed amplitudes ranging from 0.5 to 1.1 in., are generally between 35 and 110 cyc./min., depending on the column and on the operating conditions, e.g., on throughput rate, lower frequencies generally being optimum at higher rates.

2.2 Volume velocity

The effect of volume velocity on the upper and lower flooding frequencies has been discussed under 1.2, above.

Pulse-column H.T.U. values are relatively insensitive to variations in the throughput rate, provided that the applied pulse ensures good emulsion-type phase dispersion. Plots of H.T.U. values against the throughput rate (expressed in the usual terms of the sum of the superficial volume velocities of the two phases) at constant pulsing conditions are generally convex downward and shallow, indicating H.T.U.'s closely approximating the optimum values over a wide (often at least 4-fold) range of throughputs, with rising H.T.U. values at high and low rates, as shown below.

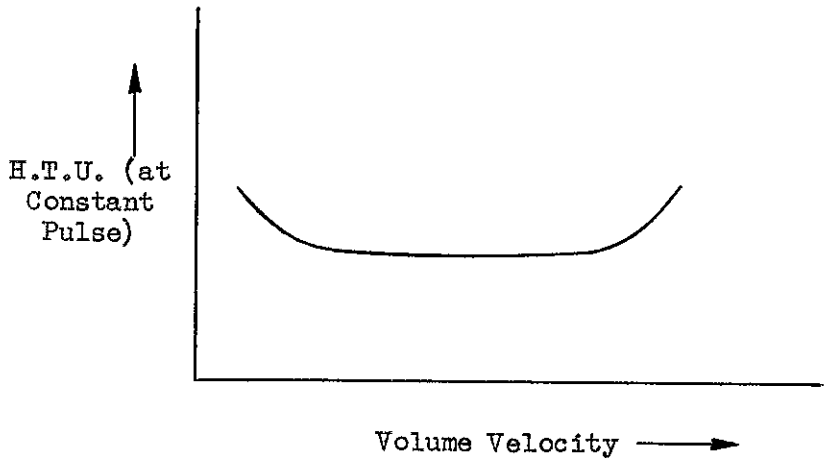

The increase in the constant-pulse H.T.U. values at low throughput rates may usually be circumvented by increasing the frequency, taking advantage of the higher flooding frequencies at the low throughput rates. This is illustrated in the plot below.

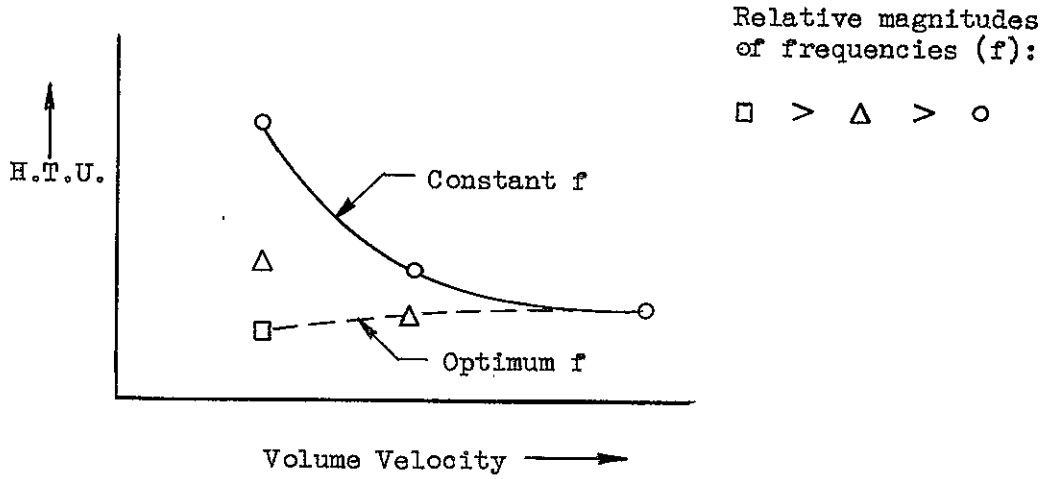

No such expedient is available for flattening the H.T.U.-vs.-throughput curve at the high-rate end. Therefore, a diameter decrease gained from a column design based on a high superficial flow rate must often be paid for with increased column height or impaired solvent-extraction performance (fewer transfer units in the column). On the other hand, choosing the larger column with the lower superficial flow rate will not necessarily be a preferred alternative because H.T.U. values also increase with column diameter (owing to the "scale-up" factor) and because the larger-diameter column may require purchasing a larger, more expensive pulse generator.

2.3 Flow ratio

H.T.U. values generally increase with increasing continuous-to-dispersed phase flow ratio (approximately in direct proportion to the square root of the flow ratio in one study which may not be typical for Purex columns).

While the flooding volume velocity (sum of both phases) of a pulse column probably generally increases with increasing continuous-to-dispersed phase flow ratio,[26] neglect of this effect should seldom result in an error of practical importance for the Purex columns in the flow-ratio ranges of interest.

2.4 Solute concentration

Height-of-transfer-unit values generally increase with decreasing solute concentration, so that, for example, a 3-fold reduction of the concentration of uranium in the feed to a column may result in only halving its concentration in the raffinate. As an aspect of this effect, H.T.U. values are generally higher at the dilute end of a column than at the concentrated end.

2.5 Physical properties of liquids

Physical properties known to be important in pulse-column performance are (a) the density difference between the liquid phases, (b) the density and (c) viscosity of the continuous phase, (d) interfacial tension between the phases, and (e) the diffusivities of the diffusing components.

While these effects are complex and are not sufficiently well understood to permit prediction of column performance from physical data, some empirical evidence supports the following generalizations (each applying when all other factors are equal) as potentially useful first approximations.

2.51 Effect on capacity[27]

The flooding capacity increases as approximately the 0.7 power of the density difference between the phases. This density difference in the Purex-process columns ranges from about 0.1 to 0.3 g./ml.

The flooding capacity is approximately proportional to the minus 0.3 power of the continuous-phase viscosity; i.e., a low continuous-phase viscosity favors a high flooding capacity. The Purex-Plant continuous-phase viscosities range from 1 to 3 centipoises.

The viscosity of the dispersed phase does not appear to exert an important effect on the flooding capacity.

A high interfacial tension generally favors high flooding capacity, the flooding capacity being proportional to about the 0.4 power of the interfacial tension. The interfacial tensions between the organic and aqueous phases of the Purex-process systems are fairly low -- generally between 10 and 15 dynes.

2.52 Effect on H.T.U.

Individual-film H.T.U. values are generally believed to vary directly with the value of the dimensionless Schmidt Number (for the phase in question) raised to about the 0.6 power:

$$\frac{\mu}{\rho D}^{0.6}$$

where any set of consistent units may be used, such as:

μ = viscosity, lb./(hr.)(ft.);

ρ = density, lb./cu.ft.;

D = diffusivity of the diffusing component, sq.ft./hr.

Hence, individual aqueous-film or organic-film H.T.U. values should be smaller for lower viscosity and higher diffusivity values.

2.6 Diluent

Transfer-unit heights and flooding capacities may vary somewhat with the physical properties imparted by the diluent to the solvent phase, as discussed under 2.5, above.

Column performance may also be affected by the nature and concentrations of any non-inert impurities in the diluent.

2.7 Temperature

An increase in temperature generally both increases the flooding capacity and decreases the H.T.U., presumably because increased temperature reduces the liquid viscosities and increases the diffusivities of the diffusing components. The viscosity of liquids generally decreases on the order of 2 per cent for each degree centigrade rise in temperature, while the diffusivity is ideally directly proportional to the absolute temperature. Thus for a 20°C. (about 40°F.) rise in temperature, the individual-film H.T.U.'s, and consequently over-all H.T.U.'s in the absence of complicating channeling and back-mixing effects, should decrease by almost 30%, although a 10% over-all H.T.U. decrease has been more typical of limited

pilot-plant experience. The flooding capacity should increase by about 10% upon a similar temperature rise, an expectation which has been generally confirmed in limited pilot-plant studies.

While increased temperature quite generally lowers H.T.U. values, its effect on the distribution ratio of the solutes of interest may be favorable or unfavorable, as indicated by the data in Chapter IV. The net effect of a temperature increase on column performance is the resultant effect of these mutually reinforcing or opposing tendencies. In the Purex A-type columns the temperature effect on uranium distribution ratio works to oppose the effect on H.T.U., while in the C-type columns these two effects reinforce each other.

In the operation of the Purex-Plant pulse columns, the potential benefits of elevated-temperature operation must also be weighed against possible adverse effects of accelerated solvent and diluent degradation at increased temperatures.

3. Effect of Design Variables on Extraction and Capacity

Indicated briefly below are the nature, direction, and order of magnitude of the effects on pulse-column performance of those variables which in the Purex Plant are fixed by design.

3.1 Amplitude

The pulse amplitude affects column performance primarily as an effect of the airthmetic product of the amplitude and the frequency, as discussed under 1.2 and 2.1, above.

The amplitude-frequency product represents a useful, simple means of correlating the pulsing conditions with column performance. A more exact analysis of the data, however, indicates the need for two important additional considerations. One of these is that variation of the amplitude has effects not fully accounted for by the corresponding amplitude-frequency-product variation. Thus with 2-in.-spaced stainless-steel sieve plates an approximately 1-in. amplitude is usually optimum yielding (typically 10%) lower minimum H.T.U. values, and (typically 10 to 25%) higher maximum capacities than a 0.5-in. amplitude, and slightly (typically 10%) lower H.T.U.'s and about the same capacity as a 1.5-in. amplitude.

The need for another refinement of the amplitude-frequency-product correlation is indicated by the quite general observation that flooding, good emulsion-type operation, and the lowest H.T.U. values occur at lower amplitude-frequency products with a 0.5-in. amplitude than with a 1-in. amplitude. A more exact correlator for these effects would be an expression of the form

$$af^n,$$

where the exponent n would have some value between 1 and 2 (perhaps typically about 1.5) and might not be the same for all systems or for all ranges of the amplitude.

3.2 Wetting characteristics and choice of continuous phase

As indicated under 2.3, above, there is a trend toward increasing H.T.U. values with increasing continuous-to-dispersed phase flow ratio. As a consequence of this trend, attributed to the increase in the interphase contact area as the dispersed-phase relative flow increases, it is usually advantageous from the extraction-effectiveness standpoint to make the phase with the smaller flow continuous and to disperse the phase with the larger flow. This advantage does not appear fully -- sometimes does not appear at all -- unless the perforated-plate (or Raschig-ring) material of construction selected in each case is preferentially wetted by the continuous phase. With plates preferentially wetted by the dispersed, rather than the continuous, phase, H.T.U. values are generally higher. This effect is confirmed by visual observation of the dispersed phase, which under these conditions travels through the column in relatively large streams, films, and blobs, rather than dispersing as small drops of fairly uniform size and much larger interfacial area.

In the Purex-Plant pulse columns aqueous-phase-wetted stainless-steel perforated plates are employed in conjunction with a continuous aqueous phase, i.e., with the interface positioned at the top; and organic-wetted fluorothene plastic plates (fluorothene Raschig rings in the case of the 2A Column) are used in conjunction with a continuous organic phase, i.e., with the interface at the bottom.

Higher capacities are generally obtainable with stainless-steel plates than with fluorothene plates. Maximum capacities obtainable with 1-in. stainless-steel and 1-in. fluorothene Raschig rings have, in limited studies, been found comparable.

For process sytems in which it is advantagoues to disperse the aqueous phase (i.e., when the aqueous-to-organic phase flow ratio is high), capacities at least as high as those of stainless-steel plates and H.T.U. values as low as those obtained with fluorothene plates may often be obtained by the use of "dual" plates, i.e., plates with one plastic (organic-wetted) and one stainless-steel (aqueous-wetted) face. The dual plates are oriented with the plastic face toward the organic-phase inlet end of the column (i.e., downward when the organic is the light phase).

3.3 Sieve-plate geometry

Design of perforated plates for a given pulse-column application generally involves a compromise between the desiderata of high capacity and low H.T.U. values. Capacity and H.T.U. both increase with increasing hole size, plate spacing, and percentage of free (perforated) area of the plates. A perforated-plate cartridge of 2-in.-spaced stainless-steel plates with 1/8-in. holes and 23% free area, designated "standard cartridge", often represents a satisfactory compromise between the conflicting functional requirements.

In the neighborhood of the "standard-cartridge" geometry, typically up to 1-1/2 to 2-fold variations in capacity and H.T.U. are encountered as hole size, plate spacing, or free area is varied 3 to 4-fold.

An increase in the mean diametric clearance between the plates and the wall of a 3-in.-diameter column from 0.015 to 0.125 in. has in most cases been found to exert little or no adverse effect on H.T.U. values. With one experimental system, however, with a specific-gravity difference between the phases considerably higher than encountered in the Purex Plant (close to 0.5) and with the phase densities and uranium concentrations highest at the top of the column, there was enough channeling along the wall of the 3-in.-diameter column with the wider clearance to cause an approximately 50% increase in H.T.U.

3.4 Height of plate or packed section

H.T.U. values generally increase with increasing column height. This is partly due to a general trend toward higher H.T.U. values with decreasing diffusing-component concentrations, as discussed under 2.4, above. Aggravation of the channeling tendencies with increasing column height is probably a contributing cause of the higher H.T.U.'s in taller columns.

As discussed in Section F, there appears to be little improvement in decontamination factors upon increasing the height of a pulse-column decontamination section above the neighborhood of 10 ft.

Hard-to-avoid chemical impurities (such as those giving rise to "inextractable" uranium or plutonium) sometimes limit the extraction-effectiveness improvement obtainable by increasing the column height (and hence the number of transfer units in the column).

3.5 Column diameter

As the column diameter increases the countercurrently flowing liquid phases display an increasing tendency to channel in some portion of the column cross section rather than distribute evenly across it. This increasing channeling tendency brings with it increasing overall transfer-unit heights and thus rising uranium and plutonium losses as the column diameter becomes larger. The severity of these effects varies with the properties of the liquid-liquid system and with the column design. Since the adverse effect on column performance of any fixed degree of channeling is greatest when the extractant flow in excess of the theoretical minimum requirement is small, the impairment of column performance with diameter scale-up is particularly serious for those liquid-liquid systems in which, as in the Purex A-type columns, only a small excess extractant flow is available.

The "scale-up" factor (ratio of full-scale to intermediate pilot-plant-scale H.T.U. values) upon going from 3-in.-diameter to Purex-Plant-scale (7-in. to 34-in.-diameter) columns is usually slight: for example, less than 1.5 (i.e., less than a 50% H.T.U. increase) for the C-type columns upon going from the 3-in.-diameter to the 27-in.-diameter (largest tested) scale.

In the case of A-type columns, on the other hand, the scale-up effect upon going from a 3-in. to a 24-in.-diameter extraction section is, in the absence of louver-plate redistributors, very large, optimum losses from a 13-ft.-high plate section increasing from less than 0.001% to the neighborhood of 6%.

Besides the proximity to the operating-diagram "pinch", other factors undoubtedly contribute to the unusually large scale-up effect in the A-type columns. The fact that the continuous aqueous phase is considerably denser at the top of the extraction section than at the bottom may be a contributing cause. The scale-up effect may also be partly connected with the specific nature of the differences in phase-dispersion patterns in various portions of the A-type column extraction sections.

The limiting superficial volume velocities and limiting pulse amplitudes and frequencies for stable operation are generally not appreciably affected by scale-up of the column diameter from 3-in. to the Purex-Plant scale (7 to 34-in.). However, although transition from stable, emulsion-type to unstable operation occurs at similar conditions in columns of different diameter, a 3-in. column sometimes undergoes complete flooding more readily than a larger column. This is attributed to the fact that in highly unstable operation a fist-size glob of coalesced dispersed phase which fills the entire cross section of the 3-in. column may there obstruct the countercurrent flow of the phases sufficiently to cause a complete flood. In a much larger column a similar glob has ample room to channel past the oppositely flowing continuous phase.

3.6 Louver plates

Severe channeling leading to high H.T.U. values and high losses in large-diameter columns, such as that occurring in the Purex A-type columns, may be remedied by the use of louvered redistributor plates. Such a redistributor, developed at Hanford, consists of a solid horizontal plate fitting more or less snugly into the column and provided with louvers designed to impart a swirling or eddying motion to the column contents as they are pulsed. In the designs used in the Purex Plant the louver slats are oriented upward and additional eddying effects are imparted by vertical baffles placed in the path of the liquid discharged from the louvers. Louver plates are located at selected intervals along the length of the column. A suitable length of the column just above and just below the redistributor plate (6-in. in the Purex Plant) is generally left free of sieve plates, to relieve flooding tendencies and to provide sufficient unimpeded space for the swirl to cause mixing of the column contents, and thus to break up channeling.

Louver plates designed and located as shown in Chapter XII have been found in "cold" tests to reduce 24-in.-diameter A-type column optimum uranium losses from approximately 6% to 0.001%.

Louver plates with 13 to 17% free area, such as used in the Purex Plant, have been found in limited tests to have no important effect on the throughput capacities of columns employing a "standard" (23%-free-area) sieve-plate cartridge.

Louver plates with a free area approximating that of the sieve plates may sometimes be used, interspersed with sieve plates, to raise the throughput-rate threshold for the occurrence of emulsion instability. In the Purex-Plant IB Scrub Column, louver plates are used for this purpose. In all other Purex-Plant applications (A-type and IB Extraction Columns) the purpose of the louver plates is to break up channeling.

3.7 Raschig rings

Stainless-steel or plastic Raschig rings (hollow cylinders of diameter equal to length) are competitive with perforated plates for some pulse-column applications. As discussed in Section D, 1-in. fluorothene plastic Raschig rings have been found to constitute the most advantageous, tested internals design for the 2A Column, the only Purex-Plant column not employing sieve plates. The general performance characteristics of Raschig-ring-packed pulse columns have been indicated under 1.2, above. The specific performance characteristics of the 2A Column are discussed in Section E.

Limited studies with various chemical systems have indicated that, as compared with conventional sieve-plate designs, 1-in. Raschig rings tend to exhibit higher capacities, higher H.T.U.'s, and more pronounced impairment in performance due to channeling upon diameter scale-up.

3.8 Nozzle plates

Stainless-steel "nozzle" plates, a recent Hanford development for pulse columns, are of potential value in the same general types of application as plastic or dual plates, discussed under 3.2, above. Nozzle plates are sieve plates with each hole indented. The indentations cause the holes in the plate to act as so many tiny jetting nozzles. The nozzles (indentations) are oriented toward the non-wetting-phase inlet end of the column, i.e., downward for stainless-steel nozzle plates used in conjunction with a lighter-than-water organic phase.

Favorable nozzle-plate designs may exhibit typically 50% higher throughput capacities and slightly (up to 30%) lower H.T.U. values than well-designed (unindented) fluorothene sieve plates.

The potentialities of nozzle plates in conjunction with Purex applications (notably for C-type and O-type columns) are discussed in Section D.

3.9 Pulse wave shape

An approximately sinusoidal pulse wave shape (displacement-vs.-time characteristic) is employed for all Purex-Plant columns.

Limited experience indicates that pulse wave shapes substantially deviating from the sinusoidal often give optimum-frequency H.T.U. values comparable to those obtained with sine waves. It is known that some non-sinusoidal (e.g., saw-tooth) wave shapes substantially reduce flooding volume velocities, as well as flooding frequencies, from those obtained with a sine-wave pulse.

D. DEVELOPMENT OF PUREX PULSE-COLUMN SPECIFICATIONS

1. Purex-Plant Pulse Columns

The following table summarizes the salient details of the Purex-Plant pulse-column specifications:

PUREX-PLANT PULSE-COLUMN SPECIFICATIONS

Column	Over-All Height, Ft.	Plate or Packed Section: Height, Ft.	Plate or Packed Section: Diameter, In.	Plate or Packed Section: Design[a]
HA, IA, 2D	33	13.5 Extn. 13.2 Scrub	24 Extn. 32 Scrub	Standard cartridge[b] Standard cartridge[c]
HC, IC, 2E	27	18.0	34	Fluorothene plates
IBX	33	28.0	27	Standard cartridge[d]
IBS	19	13.3	8	Standard cartridge[e]
2A	40	20.9 Extn. 9.8 Scrub	7 Extn. 7 Scrub	Fluorothene Raschig rings Fluorothene Raschig rings
2B	30	21.0	7	Standard cartridge
IO, 2O	33.4	26.3	34	Fluorothene plates

Notes:

(a) Standard cartridge: stainless-steel plates with 1/8-in.-diam. holes, 23% free area; 2-in. plate spacing.
Fluorothene plates: 3/16-in.-diam. holes, 23% free area; 4-in. plate spacing.
Fluorothene Raschig rings: 1-in.-diam. by 1-in. long.
(b) 13%-free-area louver plates inserted 14, 40, 80 and 120 in. below the top sieve plate of the extraction section.
(c) 16%-free-area louver plates located 0, 70, and 128 in. above the bottom of the scrub-section plate cartridge.
(d) Six 16%-free-area louver plates inserted at 4-ft. intervals.
(e) 20%-free-area louver plates inserted at 14, 36, 60, 84, 108, and 132 in. below the top of the plate cartridge.

Detailed design specifications and drawings of the columns are presented in Chapter XII, while their performance characteristics are described in Section E and Figures V-15 to V-24 of this chapter.

The Purex pulse-column designs are based primarily on extensive pulse-column development studies conducted at the Hanford "cold" semiworks, employing experimental columns ranging in size from 3-in.-diameter to full scale.[21]

The Hanford studies, in turn, built on the process-development foundations laid by the "hot" pilot-plant studies at Oak Ridge.(33) The following subsections summarize the salient experimental findings which have led to the choice of the pulse-column designs adopted for the Purex Plant. Comparative examples of the performance of promising alternative designs are given in many cases to indicate the criteria for choosing the final column design. In all cases, among the design features sought were minimum column heights and diameters compatible with low waste losses, adequate capacity, and the standardization of column and pulse-generator designs.

2. Functional Requirements

The functional requirements of the Purex Plant are set forth in Chapter I.

The pulse columns were designed to permit the attainment of optimum extraction effectiveness (approximately 0.1% or less U or Pu loss per column) at instantaneous uranium processing rates ranging from 3 to 10 short tons U/day. However, many of the Purex-Plant pulse columns are capable of processing rates as high as 16 to 20 tons U/day without undue loss of effectiveness, though with less assurance of consistently good performance in prolonged radioactive Plant service.

The uranium and plutonium yields from the pulse-column battery are expected to be at least 99%.

The desired uranium-plutonium separation yields a uranium product containing not more than 10 parts of plutonium per billion parts of uranium and a plutonium product stream containing uranium concentrations of the order of 0.1% or less of the plutonium concentration.

The uranium and plutonium effluent streams from the pulse-column battery must be decontaminated from radioactive fission products on the order of 10^6 and 10^7-fold respectively (the exact decontamination factors required being a function of the irradiation and "cooling" history of the parent pile-fuel slugs), as discussed in Section F. The transfer-unit and equivalent-theoretical-stage requirements for the desired uranium and plutonium extraction for the several columns are tabulated in Subsection B5 of this chapter.

3. Development of A-Type Column Design

3.1 Extraction section

The "standard cartridge", chosen for the TBP lant because of its favorable performance, proved to be a good plate cartridge for the Purex A-type columns also. This cartridge is composed of two-inch-spaced stainless-steel plates containing 1/8-in.-diam. holes on 1/4-in. triangular spacing, giving 23% free area. Since the organic-to-aqueous phase flow ratio is relatively high (2.2 and 5.5 by volume in the extraction and scrub sections, respectively) and since the stainless-steel plates are preferentially wetted by the aqueous phase, the interface is maintained at the top, making the aqueous phase continuous.

An abnormally high scale-up factor (impairment of extraction effectiveness) was found on increasing the column diameter from 3 in. to 24 in. which has been attributed to gross channeling of the two phases in the larger column. Louver-plate redistributors containing 13% free area (described in Chapter XII) inserted at about two to three-foot intervals in the large-diameter column were found to inhibit this phase channeling, as indicated in the table below.

EFFECT OF REDISTRIBUTORS ON URANIUM LOSS IN THE A-TYPE COLUMNS
(Data from dual-purpose column studies; aqueous phase continuous. Cartridge geometry: stainless-steel sieve plates, 1/8-in. holes, 23% free area, 2-in. plate spacing, 13.5-ft.-long extraction section.)

Amplitude x Frequency, In./Min.(a)	% U Loss		
	3-In. Column	23.5-In. Column	
		Without Louver Plates	With Louver Plates(b)
26 to 28	0.0009	12.6	---
37	---	10.7	0.05
53 to 55	0.0004	6.4	0.001
64	---	6.4	0.001

Notes:

(a) Pulse amplitude = 0.9 in.
(b) 13%-free-area louver plates with 6 in. of free space on either side inserted 14, 40, 80, and 120 in. below top extraction-section sieve plate.

The performance characteristics of the Purex-Plant A-type columns are summarized in Section E and Figures V-15, V-16, and V-17 of this chapter.

3.2 Scrub section

The "standard-cartridge" scrub-section plate design was chosen on the basis of its adequate fission-product decontamination performance demonstrated in "hot" pilot-plant pulse columns at Oak Ridge, on the 2-in.-diameter scale. Under the conditions of chemical flowsheets comparable to the Purex HW #3 Flowsheet, but with the co-decontamination cycle omitted, gross gamma-emitter decontamination factors in the neighborhood of 500 and 80 for the IA and 2D Columns, respectively, were demonstrated at favorable pulse conditions. (The findings are discussed in more detail in Section F.)

Pilot-plant scrub-section height variations between 12.5 and 18 ft. for the IA Column and between 9 and 13 ft. for 2D exerted no significant

effect on decontamination, indicating that little or no improvement in decontamination can be expected on lengthening the scrub section beyond about 10 to 13 feet. The Purex-Plant A-type-column scrub plate sections are 13.2 ft. high.

The scrub-section diameter (32 in.) was chosen to permit a uranium processing capacity comparable to that of the (24-in.-diam.) extraction section and to result in a near-optimum scrub-section pulse amplitude (i.e., one such that frequencies giving optimum extraction-section performance should also be near optimum for scrub-section decontamination effectiveness). The scrub-section pulse amplitude, with the diameter chosen, is 0.6 in., as compared with a 1.1-in. extraction-section amplitude.

Louver-plate redistributors with 16% free area were added to the scrub section at the bottom of the cartridge and just below each of the intermediate-scrub introduction points. These are expected to improve the performance by insuring adequate mixing of the influent streams and inhibiting gross channeling of the phases. (An approximately two-fold improvement in the RA Column D.F. was obtained in the Uranium Recovery Plant when scrub-section louver plates were installed, although some or all of this improvement may have been caused by other column and flowsheet modifications made at the same time.)

4. Development of C-Type Column Design

In pilot-plant tests it has been found as a general rule that the best capacity and extraction performance will be obtained if the phase with the greater flow is dispersed and if the continuous phase preferentially wets the plates or packing or that side of the sieve plate with which it is normally in contact. Thus in the C-type columns, where the aqueous flow is the greater, the best performance should be obtained with the organic phase continuous and with organic-wetted, plastic (or "dual", i.e., plastic-undercoated) sieve plates. This is illustrated in the following table of experimental results with stainless-steel plates, preferentially wetted by the aqueous phase; fluorothene plastic plates, wetted by the organic phase; and dual plates, wetted by the aqueous phase on the top surface and by the organic phase on the bottom:

COMPARISON OF HC COLUMN SIEVE PLATES

(Data from 3-in.-diam. column studies with 9-ft.-long sieve-plate cartridges.)

Plate Material	Stainless Steel	Dual[a]	Fluoro-thene	Fluoro-thene	Fluoro-thene
Hole Diam., In.	1/8	1/8	1/8	3/16	1/4
% Free Area	23	23	23	23	23
Plate Spacing, In.	2	2	4	4	4
Continuous Phase	Aqueous	Organic	Organic	Organic	Organic
Max. Stable Capacity, T.U/Day[b]	17	>37	17	21	25
Max. T.U/Day for H.T.U. Run[b]	16	36	16	20	23
Optimum H.T.U., Ft.:					
At 10 T.U/Day	1.2	0.74	--	0.89	1.0
At Maximum T.U/Day	2.1	1.4	0.92	0.95	1.1
Optimum % U Loss:					
At 10 T.U/Day	0.4	0.004	--	0.03	0.2
At Maximum T.U/Day	3.8	1.5	0.02	0.05	0.2
Required Freq., Cyc./Min.[c]	90	≦100	40	60	≦80

Notes:

(a) Stainless steel with the bottom surface coated with Kel-F.
(b) Equivalent U processing rate in a 34-in.-diam. column.
(c) To obtain an H.T.U. of 1.5 ft. or less at 10 t.U/day.

Though it is evident from the above table that the dual plates provide considerably more capacity than the others tabulated, there is some question about the durability of the plastic-to-metal bond under sustained plant operation. Consequently, the 3/16-in.-diam.-hole flurothene-plate cartridge was chosen because of its high efficiency and its adequate capacity in a 34-in.-diam. column (the maximum column diameter which will allow an adequate pulse amplitude, 0.5 in., with the standardized 485-cu. in. pulse generator chosen for the A-type column). The performance characteristics of this plate cartridge are shown in Figure V-18.

Other cartridges tested included 1-in. fluorothene Raschig-ring packing, which permitted excessive phase channeling, occasionally resulting in high losses even in an 8-in.-diam. column; and stainless-steel "nozzle" plates (sieve plates with the holes indented downward by punching to form approximately 0.05-in.-long nozzles).

Nozzle plates, developed too late for incorporation in the original Purex-Plant design, have shown excellent promise for C-type column application. The performance characteristics of a C-type column with 4-in.-spaced nozzle plates with 1/8-in. holes, 10% free area, and a 0.05-in. indentation depth, are shown in Figures V-25 and V-26. These plots are based on 3-in. and 27-in.-diameter "cold" tests at Hanford. Figures V-25 and V-26 indicate nozzle plates of the stated design to permit under favorable operating conditions attainment of (34-in. diameter) C-type column capacities in excess of 25 tons U/day and uranium losses as low as approximately 0.001% (solvent purity permitting).

5. Development of IB Extraction Column Design

The extraction performance of the IBX Column was investigated at O.R.N L. using a 2-in.-diam. column with an 18-ft.-long "standard cartridge". The results of these runs, summarized in Section E, are the basis for the selection of this cartridge for the Purex-Plant column and of the Plant plate-section height of 28 ft., which should permit attainment of an approximately 0.1% plutonium loss from the column, on the assumption that the H.T.U. values in the 27-in.-diam. Plant column do not exceed about 130 to 140% of those found in the 2-in. pilot-plant column.

The column diameter (27 in.) was chosen on the basis of flooding studies in 3, 4, 8, and 24-in.-diameter columns. The flooding performance is illustrated in Figure V-19.

Six louver plates having 16% free area were added to the Plant cartridge at four-foot intervals to minimize any phase channeling that might impair the effectiveness of this large (27-in.-diam.) column.

6. Development of IB Scrub Column Design

The "standard cartridge" used successfully in the A-type columns is also specified for the IBS column, which employs a quite similar chemical flowsheet. However, it has been found necessary to modify this cartridge by inserting 20%-free-area louver plates, with 6 in. free of sieve plates on either side, at varying intervals to relieve emulsion-induced instability which occurs at high rates upon the attainment of steady-state. Possibly as a corollary of relieving emulsion instability, the louver-plate cartridge modifications reduced uranium contamination in the IBP and increased the flooding capacity of the column. A comparison of the standard-cartridge performance with that of two louver-plate-employing modifications is presented in the following table:

COMPARISON OF IB SCRUB COLUMN STANDARD-CARTRIDGE MODIFICATIONS

(Data from 8-in.-diam. column studies; aqueous phase continuous. Cartridge geometry: stainless-steel plates, 1/8-in. holes, 23% free area, 2-in. plate spacing, 13.3-ft. height; modified as noted.)

U Processing Rate, Tons/Day	IBS Flow, % of HW #3 Flowsheet	Ampl. x Freq., In./Min.	Stability [a] and % U in Pu[b]		
			Standard Cartridge	Mod. 1[c]	Mod. 2[c]
12	100	40	0.2, 0.4	0.1	0.02[d]
	40	40	0.3	0.09	0.06[d]
		50	---	0.02, 0.02[d]	0.02,<0.02[d]
		60	---	U	U
		70	---	F	F
17	100	40	---	0.03	<0.02
26	100	40	F	0.2, 0.3, S to F	F
	70	30	---	S	<0.02
		40	---	0.2	<0.02 U
	40	30	0.3 U	S	S
		40	F	0.2, 0.4, 0.3[d]	0.03, 0.06, 0.02[d] S to U
		50	F	0.05 to 0.4, 0.1[d] S to U	F

Notes:

(a) Stable operation unless otherwise indicated:
U: unstable operation
F: complete flooding
S: stable operation

(b) Based on an average irradiation of 600 MWD/T.

(c) The standard cartridge was modified by inserting in it approximately 20%-free-area louver plates, with 6 in. free of sieve plates on either side, at the following locations, stated in inches from the top sieve plate:
Modification 1: 14, 36 to 84 at 6-in. intervals, 108, and 132.
Modification 2 (selected for the Purex Plant): 14, 36, 60, 84, 108, and 132.

(d) Ferrous ion absent from feed.

The first modification permitted the greatest capacity; but at processing rates at or above about 20 tons U/day, it proved to be much less efficacious than the second modification. Since the capacity obtainable with the second modification was adequate, it was chosen for the Purex Plant. Performance characteristics of this modified standard cartridge are shown in Figures V-20 and V-21.

7. Development of 2A Column Design

7.1 Extraction section

The diameter of the 2A and 2B Columns is limited to 7 inches by nuclear safety considerations. Consequently no cartridge design could be considered for these columns which could not be operated at superficial volume velocities corresponding to uranium processing rates comfortably in excess of 10 tons/day in a 7-in. column. The performance and description of five of the cartridges tested in the 2A Column are summarized in the following table:

COMPARISON OF 2A COLUMN EXTRACTION SECTION CARTRIDGES

(Data from 3-in.-diam. simple column studies with 9-ft.-long cartridges; U used as a stand-in for Pu.)

Type of Cartridge	Sieve Plates			1-In. Raschig Rings	
Material	Stainless Steel	Dual[a]	Fluorothene	Stainless Steel	Fluorothene
Hole Diam., In.	0.125	0.06	0.125	---	---
% Free Area	23	21	23	---	---
Plate Spacing, In.	2	2	2	---	---
Continuous Phase	Aqueous	Organic	Organic	Aqueous	Organic
Max. Stable Capacity, T.U/Day[b]	13	>17	10	>21[f]	23[g]
Optimum H.T.U., Ft.:					
At 10 T.U/Day	1.2	2.0	1.4	1.2[d]	1.1
At 17 to 20 T.U/Day	---	1.6	---	1.4	1.8[e]
Optimum % U Loss:					
At 10 T.U/Day	0.09	1.5	0.2	0.09[d]	0.06
At 17 to 20 T.U/Day	---	0.5	---	0.2	0.9[e]
Required Frequency, Cyc./Min.[c]	50	70	25	70	0

Notes:

(a) Stainless steel with the bottom surface coated with Kel-F.
(b) Equivalent Plant U processing rate permitted by 7-in.-diam. 2A Column.
(c) To obtain an H.T.U. of 2.0 ft. or less at 10 t.U/day.
(d) With aqueous phase continuous. Optimum H.T.U. with organic phase continuous was 1.5 ft.
(e) Measured with no pulse. Pulsing may be expected to improve performance.
(f) 22 determined in 22-ft. extn.-packed-height, 8-in.-diam. column.
(g) 25 determined in 22-ft. extn.-packed-height, 8-in.-diam. column.

Only three of the cartridges tested, the dual-face sieve plates and the two types of Raschig-ring packing, provided the desired capacity. The dual-face plates proved to be much less efficient than the Raschig rings and were eliminated from further considerations. The fluorothene Raschig rings were chosen for the Plant in preference to stainless-steel rings partly because their range of efficient pulse frequencies was much wider, as well as on the basis of their slightly superior optimum-condition extraction effectiveness and 10 to 15% greater capacity safety margin.

One advantage of stainless-steel Raschig rings is that, being preferentially wetted by the aqueous phase, they permit the interface to be maintained in the more convenient, top position. On the other hand, a bottom interface position (used with the fluorothene rings) possesses the advantage of precluding carry-over of interfacial "crud" into the product (2AP) stream. The performance characteristics of the fluorothene-ring packing in the Plant column are shown in Figure V-22.

Stainless-steel "nozzle" plates showed some promise in recent preliminary tests.[21s]

7.2 Scrub section

The scrub section of the 2A Column, like its extraction section, is packed with 1-in. fluorothene Raschig rings. Organic-phase-wetted internals are required in the scrub section, since, a bottom interface position being required by the extraction section, the scrub section must necessarily also be operated with the organic phase continuous. On the basis of "cold" tests at approximately full scale, the throughput capacity of the scrub section at least matches that of the extraction section.

Visual observation during "cold" test runs and scrubbing effectiveness tests of the fluorothene rings with HNO_3 as the diffusing component[21o] have provided indirect indication that their fission-product scrubbing effectiveness should be adequate.

8. Development of 2B Column Design

The flow ratio in the 2B Column favors making the aqueous phase continuous; consequently development work was concentrated on aqueous-wetted, stainless-steel internals. The performance of the two sieve-plate designs tested is compared in the following table:

COMPARISON OF 2B COLUMN STAINLESS-STEEL SIEVE PLATES

(Data from 3-in.-diam. column studies; aqueous phase continuous. 1-in. pulse amplitude. Cartridge geometry: 9 ft. of stainless-steel sieve plates spaced two inches apart; perforation geometry indicated below. U used as a stand-in for Pu.)

Hole Diameter, In.	0.06	0.125
% Free Area	21	23
Maximum Stable Capacity, T.U/Day[a]	35	40
Optimum H.T.U., Ft.:		
At 10 T.U/Day	0.9	1.1
At 30 T.U/Day	1.5	1.4
Optimum % U Loss:		
At 10 T.U/Day	0.02	0.06
At 30 T.U/Day	0.7	0.35
Required Frequency, Cyc./Min.[b]	40	50

Notes:

(a) Equivalent Plant U processing rate permitted by 7-in.-diam. 2B Column.
(b) To obtain an H.T.U. of 1.1 ft. or less at 10 t.U/day.

The 0.125-in.-hole standard cartridge was chosen for the Plant partly because of its superior performance at high rates and partly because it was feared that the performance of the smaller holes might be more sensitive to the effects of any solid impurities that might be introduced. The performance characteristics of this cartridge are discussed in Subsection E6.

9. Development of O-Type Column Design

The organic phase must be made the continuous one in the O-type columns to provide the organic-phase holdup time necessary for effective fission-product cleanup as discussed in Chapter IX. The following table compares the performance of the organic-wetted fluorothene sieve-plate geometries that were tested:

COMPARISON OF IO COLUMN FLUOROTHENE SIEVE PLATES

(Data from 3-in.-diam. column studies; organic phase continuous. Amplitude = 0.5 in. Cartridge height = 9 ft.)

Hole Diam., In.	1/8	1/8	1/8	3/16	1/4
% Free Area	23	23	40	23	23
Plate Spacing, In.	2	4	4	4	4
Maximum Stable Capacity, T.U/Day[a]	15	16	18	22	20
Frequency Required at 10 T.U/Day, Cyc./Min.[b]	40	40	60	60	80
Maximum Stable Frequency at 10 T.U/Day, Cyc./Min.	70	75	110	100	110

Notes:

(a) Equivalent Plant U processing capacity permitted by 34-in.-diam. IO Column.

(b) Estimated minimum Plant frequency for satisfactory fission-product clean-up.

The 3/16-in.-diam.-hole cartridge which was chosen on the basis of the above comparison is the same as that used in the C-type columns.

Other cartridges tested for the IO Column included the "standard" stainless-steel sieve-plate cartridge, which gave a prohibitively low capacity; Raschig-ring packing, which, on the basis of C-type column tests, were eliminated because of their channeling tendency in large-diameter columns; and nozzle plates.

Nozzle plates, developed too late for incorporation in the original design of the Purex O-type columns, have shown excellent promise for this application. "Cold" pilot-plant tests employing O-type columns 3-in. and 27-in. in diameter have indicated that with nozzle plates of a favorable design -- 4-in.-spaced stainless-steel nozzle plates with 1/8-in. holes, 0.05-in. indentation depth, 10% free area -- throughput capacities approximately 50% higher and (in 3-in.-diam.-column tests) uranium-transfer H.T.U. values approximately 30% lower than with the 3/16-in.-hole fluorothene plates may be obtained. (It should be noted, however, that uranium-transfer H.T.U. values do not necessarily directly reflect expected fission-product clean-up of the solvent and that insofar as a long, organic-phase residence time in the column is an important factor in effectual removal of fission products, as discussed in Chapter IX, high-volume-velocity operation of the IO Column is at a disadvantage). The flooding characteristics of O-type columns employing nozzle plates of the above-described design are indicated in Figure V-27. The following uranium-transfer effectiveness data were obtained with a "cold" 27-in.-diameter IO Column:

SCRUBBING EFFECTIVENESS OF THE O-TYPE COLUMN
USING A NOZZLE-PLATE CARTRIDGE

Volume Velocity, GPH/Sq. Ft., Sum of Flows	Equivalent U Processing Rate, Tons/Day[a]	Ampl. x Freq., In./Min[b]	Aq./Org. Volume Flow Ratio	% U Retained[c]	U H.T.U., Ft.[d]
280	4	50	0.7	0.04	2.3
520	10	40	0.3	0.07	2.5
		50	0.3	0.17	2.8
1050	20	30	0.3	5.0 [e]	5.9 [e]
		35	0.3	0.09	2.6
1280	24	30	0.3	0.6	3.5

Notes:

(a) In a 34-in.-diam. IO Column.
(b) The Plant frequency may be determined by dividing the product by the Plant amplitude, 0.53 in.
(c) With an 18-ft.-high plate section. (Cf. 26.3-ft. Plant O-type column plate-section height.)
(d) Extraction factor (P) taken to be 0.
(e) 25° C. (All other determinations made at 50° C.)

10. Standardization of Pulse Generators.

Two standard pulse-generator designs, differing mainly in size, were chosen for the Plant. The design used for the large-diameter (24 to 34-in.) columns provides a pulse volume of 485 cu. in. with a frequency range of 35 to 110 cycles/min.; the other, for the small (7 and 8-in.-diam.) columns provides a pulse volume of 44 cu. in. with a frequency of 25 to 100 cycles/min.

Standardization of the pulse generators was desirable to reduce the number of replacement spares to a minimum. The pulser size and frequency range specifications were chosen so as to embrace the pulsing requirements of the various columns for which they are employed. The pulse amplitudes range from 0.5 in. in the C and O-type columns to 1.1 in. in the A-type column extraction sections and in the 2A and 2B Columns. The following table shows the approximate pulse frequencies required for near-optimum performance in all the columns with the specified pulse generators:

OPTIMUM PULSE FREQUENCY REQUIREMENTS OF THE PUREX COLUMNS

Column	Column Diam., In.	Approximate Pulse Freq. Required, Cyc./Min. At 3 T.U/Day	At 10 T.U/Day	At 20 T.U/Day
Pulse Volume = 485 cu. in.:				
HA, IA, 2D	24 (Extn.)	55	55	40
HC, IC, 2E	34	80	60	50
IBX	27	60	50	40
IO	34	100	90	50
20	34	100	100	70
Pulse volume = 44 cu. in.:				
IBS	8	70	45	45*
2A	7	80	50	40
2B	7	70	50	40

*) IBS/IBSF flow ratio = 40% of Purex HW #3 Flowsheet value.

E. EXTRACTION PERFORMANCE AND CAPACITY OF PUREX PULSE COLUMNS

1. Introduction

The extraction performance and capacity characteristics of the Purex-Plant pulse columns are described graphically in Figures V-15 to V-24 and discussed in the present section.

The data upon which the figures and discussion are based are derived primarily from full-scale or nearly full-scale testing of prototypes of the Purex-Plant columns with "cold" (uranium-bearing but plutonium and fission-product free) solutions at Hanford(21), supplemented as noted by results of intermediate-scale "cold" studies conducted at Hanford(21) and "hot" pilot-plant investigations carried out at the Oak Ridge National Laboratory(33).

The approximate conditions of Purex Chemical Flowsheet HW #3 (presented in Chapter I) were employed in the experimental work on which the figures and discussion are based, with such minor experimental modifications as noted. In the "cold" Hanford 2A and 2B Column studies uranium was used as a stand-in for plutonium.

The pulse amplitude employed in the tests generally equalled or approximated the fixed Purex-Plant column pulse amplitudes. In those cases where the experimental amplitude only approximated the Plant amplitude the frequencies stated in the plots are not the actual experimental frequencies, but have, for the reader's convenience, been translated to the corresponding frequencies on the Plant amplitude basis. This was done by dividing the experimental amplitude-frequency products by the pulse amplitude used in the Purex Plant. The plotted frequencies are thus directly applicable to the Purex-Plant columns (as a close approximation, in accordance with

the general approximate amplitude-frequency-product correlation discussed in Section C).

The auxiliary coordinates indicating uranium tonnage rates and uranium losses corresponding to the plotted superficial volume volocities and transfer-unit heights apply in all cases to columns of the Plant diameter and Plant plate-section height.

The experimental conditions employed in the studies on which the data points presented are based are generally summarized in the figures.

For a discussion of the decontamination performance characteristics of the Purex-Plant columns reference is made to Section F.

The column designs are described in Chapter XII.

2. A-Type Columns

2.1 General

The three A-type (uranium-extraction) columns -- HA, IA, and 2D -- are of identical construction and employ nearly identical chemical flowsheet conditions, as depicted in Chapter I. Accordingly, these columns may be conveniently discussed together.

The A-type columns are of the dual-purpose type, employing a 24-in.-diameter extraction section and a 32-in. scrub section. The extraction and scrub plate-section heights are 13.5 and 13.2 feet, respectively. Both plate sections employ a "standard" sieve-plate cartridge (stainless-steel plates with 1/8-in. holes, 23% free area, spaced 2 in. apart), with louver plates designed and located as shown in Chapter XII. The columns are operated with the interface at the top, i.e., with the aqueous as the continuous phase. The pulse amplitude is 1.1 in. in the extraction section, and 0.6 in. in the scrub section.

The minor chemical flowsheet differences between the three A-type columns include the following:

(a) Valuable concentrations of plutonium, destined to be extracted, are involved only in the HA and IA Columns; not in 2D.
(b) Reducing agent (ferrous sulfamate) is employed only in the 2D Column.
(c) Dual-scrub streams are employed only in the HA and 2D Columns; not in IA.

2.2 Effect of pulse frequency and throughput rate

The performance of the A-type column extraction sections as a function of the pulse frequency and throughput rate is shown in Figure V-15.

As shown on the first plot of Figure V-15, the capacity of the extraction section alone would be expected to be well above 30 tons U/day. The capacity of the dual-purpose A-type columns is, however, limited to about 25 to 30 tons

U/day by the flooding capacity of the scrub section, as discussed under 2.6, below.

The second plot in Figure V-15 shows the effects of frequency and throughput rate on H.T.U. and uranium losses. From this figure it can be seen that the optimum plant frequency is between about 45 and 65 cycles/min., increasing with decreasing throughput rate.

The "cold" full-scale prototype A-type column test data plotted in Figure V-15 indicate that uranium losses as low as 0.001 to 0.01% may be expected at optimum pulse frequencies, with solvent reasonably free of "inextractable"-uranium-forming degradation products. While plutonium extraction performance was not investigated in full-scale test equipment, intermediate-scale studies conducted at Oak Ridge indicate that plutonium losses may normally be 2 to 10 times higher than the uranium losses.

2.3 Effect of flow ratio on performance

The important effect of the extractant-to-raffinate phase flow ratio on H.T.U.'s and uranium waste losses is shown in Figure V-16. The curves plotted in this figure indicate that the H.T.U's and uranium losses remain relatively constant as the extractant flow rate is decreased from 140 to about 115 to 120 per cent of the "pinching" or minimum theoretically required extractant flow rate; but as the extractant flow is reduced still further, the losses (and apparent H.T.U.'s) increase rapidly until at about 100 to 105% of the "pinching" flow ratio the uranium loss is in excess of 2 per cent. The Purex HW #3 Flowsheet flow ratio is set at 118 per cent of the pinching flow ratio and, as indicated by the data, is approximately the minimum that will permit attainment of optimum waste losses, while allowing a reasonable operating tolerance for normal minor fluctuations in stream compositions and flow ratios.

2.4 Effect of temperature

The extraction reaction between uranium and TBP in the A-type columns is slightly exothermic. Therefore, an increase in column temperature impairs (reduces) the organic-to-aqueous phase uranium distribution ratios, moving the uranium equilibrium curves (Fig. V-1) to the right.

When the flow ratio in the column is sufficiently favorable to insure a safe distance from a "pinch" (discussed under 2.3, above), the slight adverse effect of increased temperature on the uranium distribution ratio, and hence on the required number of transfer units, may be offset or even outweighed by reduced transfer-unit heights at the higher temperatures. However, since every 10°C. rise in temperature brings any set flow ratio approximately 4% closer to the "pinch", there is a corresponding 4% increase in the minimum extractant flow rate required for good performance with every 10°C. temperature rise.

2.5 Effect of iron on column performance

The presence of 0.01 M ferrous sulfamate in the feed is indicated by

tests to have no significant effect on the capacity or extraction effectiveness of the 2D Column. No detectable differences in full-scale prototype 2D Column operation were observed between the effects of introducing the iron reductant in the feed, in the scrub, or omitting it altogether.

2.6 Scrub-section flooding capacity

A-type column scrub-section flooding data obtained from 3-in.-diameter column studies are plotted in Figure V-17. Because of the wide scattering of the data points, two curves are shown - one indicating the assured flooding capacity, the other showing the probable flooding capacity under normal operating conditions. The reason for the data-point scattering is not fully understood, although it is believed to be related to the solvent history. The lower determined capacities may be due to the presence of emulsifying impurities, such as dibutyl phosphate or possibly some diluent degradation products.

The maximum assured flooding capacity of the Purex A-type columns is about 25 tons U/day, although with reasonably good solvent clean-up, it may be possible to extend the capacity to 30 or 35 tons U/day. At low throughput rates the extraction-section flooding capacity limits the maximum frequency permitting stable operation. In such cases it is desirable to operate with as great a frequency as permitted by the extraction section to insure a desirably fine phase dispersion in the scrub section.

Though subject to uncertainty due to the anomalous capacity variations mentioned above, some experimental evidence indicates the following:

(a) The flooding capacity of the water-scrub section of a dual-scrub column may be slightly (up to 20%) higher than that of an acid-scrub section (i.e., of a scrub section with a single, acid scrub, or of the lower portion of a scrub section with dual, water-and-acid scrub).
(b) The capacity of an acid-scrub section (in a dual or single-scrub column) decreases slightly (possibly up to 20% within the Plant height range) with increasing height of the acid-scrub section.
(c) The flooding volume velocity may decrease slightly with increasing organic-phase uranium concentration and, hence, density (less than 20% in the 0.95 to 0.98 unscrubbed organic-phase specific-gravity range).

3. C-Type Columns

3.1 General

The three C-type (uranium stripping) columns -- HC, IC, and 2E -- being of identical construction and employing generally similar chemical flowsheet conditions, may conveniently be discussed together. These columns are 34 inches in diameter and contain an 18-ft.-high plate section consisting of fluorothene plates with 3/16-in. holes, 23% free area, spaced 4 in. apart. (For the performance characteristics of C-type columns employing stainless-steel nozzle plates, a potential alternative to fluorothene plates, reference is made to Subsection D4.)

The C-type columns are operated with the organic phase continuous, i.e., with the interface at the bottom. The pulse amplitude is 0.53 in.

Apart from minor differences in the feed nitric-acid concentrations, the significant flowsheet differences between the C-type columns are: (a) that in the HC Column, but not in IC and 2E, plutonium, as well as uranium, is stripped; and (b) that the solvent volume associated with a given weight of uranium in the ICF is 20% greater than for the HCF or 2EF, the extra solvent being contributed to the ICF stream by the IBS and back-cycled 2BW streams.

While the plutonium-stripping performance of the HC Column was not investigated in near-full-scale equipment, it is inferred from the intermediate-scale studies in the Oak Ridge "hot" pilot plant and from phase equilibrium considerations that, with solvent reasonably free of impurities which might give rise to the formation of "unstrippable" plutonium, the percentage plutonium losses should be at least as low as the uranium losses.

3.2 Effect of pulse frequency and throughput rate

The performance characteristics of the C-type columns as a function of the pulse frequency and throughput rate are shown in Figure V-18. The flooding volume velocities of the IC and HC (and 2E) Columns are essentially the same despite the minor flowsheet differences. Accordingly, only one flooding curve is plotted, with auxiliary coordinates added to indicate the different uranium weight throughput rates in the HC (and 2E) and IC Columns corresponding to the plotted volume velocities. Tests have indicated a maximum useful room-temperature capacity of approximately 1100 gal./(hr.)(sq.ft.), sum of flows (corresponding to 21 tons U/day for the HC and 2E Columns and 20 tons/day for IC); and approximately 10% higher at 40 to 45°C. (100 to 110°F.).

The H.T.U. data in Fig. V-18 show that H.T.U.'s reach minimum values of 1.5 to 1.7 ft. (giving approximately 0.01% or lower uranium losses) at frequencies of about 8 to 45 cyc./min. (in the neighborhood of 60 to 85% of the cyclic local flooding frequencies at each throughput rate) at processing rates ranging from 4 to 20 tons U/day. The H.T.U.'s on Figure V-18 were determined for the most part at ambient temperatures, but since the Plant columns will normally be operated at about 40 to 50°C., the per cent uranium losses tabulated on auxiliary coordinates are those that would be obtained with the given H.T.U.'s at the elevated temperature.

3.3 Effect of flow ratio

In near-full-scale (27-in.-diam) prototype C-type column runs made at ambient temperature, reducing the aqueous extractant flow rate from 190 to 125 per cent of the minimum theoretically required ("pinching") flow rate (from a 2.1 to a 1.4 HCX:HCF volume ratio) did not appreciably affect the approximately 0.01% waste loss. Indirect data (Figure V-26) indicate that a further decrease in extractant flow would greatly increase the waste losses in a manner analogous to that discussed for the A-type columns under 2.3, above. Accordingly, in the operation of the C-type columns the aqueous

extractant flow rate must normally be set at least approximately 25% above the minimum theoretically required according to the "pinching" flow-ratio plot presented in Figure V-13.

Operation of the C-type columns at extractant-to-feed ratios below the nominal flowsheet values (as far as losses permit) results in a corresponding increase in the uranium tonnage-rate capacity corresponding to the flooding volume velocity (based on the sum of extractant and feed flows).

3.4 Effect of temperature on performance

As in the A-type columns, an increase in temperature moves the C-type column uranium equilibrium lines (Figure V-3) to the right. However, for the C-type columns, unlike for the A-type, this increases the separation between the operating and equilibrium lines and thus permits the use of an extractant-to-feed flow ratio lower than would suffice at lower temperatures. For example, under Purex HW #3 Flowsheet conditions the IC Column extractant flow rate at 25°C. is only 128 per cent of the "pinching" flow rate, whereas the same extractant flow at 45°C. represents 160 per cent of the (45°C.) pinching rate.

Operation at elevated temperatures exerts a beneficial effect upon uranium losses from the C-type columns not only by affecting the uranium phase equilibrium favorably, but also by reducing the transfer-unit heights. This is illustrated by the following experimental data obtained with fluorothene plates of the Plant geometry at 700 gal./(hr.) (sq. ft.), sum of flows, an amplitude-frequency product of 40 in./min., and an extractant-to-raffinate flow ratio of 1.5:

EFFECT OF TEMPERATURE ON C-TYPE COLUMN EFFECTIVENESS

Column Diam., In.	Plate-Section Height, Ft.	Temperature, °C	H.T.U., Ft.	% U Loss
3	9	18	1.7	9
3	9	26	1.1	0.6
3	9	40	0.9	0.04
8	8.5	18	1.6	2
8	8.5	35	1.2	0.7
8	8.5	40	1.1	0.2
27	18	25	1.7	0.02
27	18	35	1.5	0.007

Indirect pilot-plant data indicate a slight increase in C-type column flooding volume velocities with increasing temperature, estimated at an approximately 10% increase on going from 20°C. (70°F.) to 45°C. (110°F.).

3.5 Effect of feed and extractant composition on performance

Variations in uranium concentration in the feed between 65 and 95 g./l. had little effect on H.T.U., though a tendency toward higher H.T.U.'s with more dilute feed has been observed in similar C-type column systems.

An increase in the nitric acid concentration in the feed from 0.02 to 0.2 M (as would occur if the HA or 2D Columns were single-scrub columns) has little effect on performance. However, a much larger excess of nitric acid in the feed could result in some internal reflux of uranium at the concentrated end of the column, effectively reducing the contacting height of the column by two to four feet and consequently giving somewhat higher waste losses. This phenomenon and the conditions giving rise to it are discussed in Section B.

The presence of a small amount, 0.01 to 0.03 M, of nitric acid in the aqueous extractant stream has been found to reduce emulsification tendencies of the column. Extraction performance is not significantly affected by the presence of HNO_3 in the indicated range of concentrations, though higher acid concentrations in the extractant -- in the neighborhood of 0.1 M or higher -- would increase uranium losses due to an adverse effect on the phase equilibrium.

4. IB Extraction Column

The 27-in.-diam. IBX Column employs a 28-ft. height of "standard" stainless-steel sieve plates, with 16%-free-area louver plates at 4-ft. intervals. A top interface position is used. The pulse amplitude is 0.84 in.

4.1 Flooding characteristics

IB Extraction Column flooding data derived from 3, 4, 8, and 24-in.-diameter column tests are presented in Figure V-19. As in the case of the A-type column scrub-section flooding determinations, the data points show a fairly wide scattering. Therefore, two flooding curves are drawn - one indicating the assured flooding capacity, the other showing the probable capacity under normal operating conditions. The flooding volume velocity variations at constant amplitude-frequency products were apparently connected with the immediate solvent history, though other factors may also be involved. For example, solvent used to make the IBXF which had a previous history of having a simple batch-contact sodium-carbonate wash following a heated HC Column pass invariably gave lower capacities than the same solvent which had been used previously in ambient-temperature HC Column runs. In addition, IBU (from IBX Column runs) used as IBXF also gave increased capacity. This evidence strongly hints at the presence of an emulsion-stabilizing impurity in the organic stream which was incompletely removed in the batch-washing procedure used in the pilot plant and which was intensified by increased temperature in preceding C-type column runs. The maximum IBX Column capacity indicated by the pilot-plant tests to be assured is about 15 to 16 tons U/day at the lowest frequency obtainable with

the Plant pulser (35 cyc./min.), with the attainability of 20 to 25 tons U/day appearing probable with reasonably good solvent cleanup.

4.2 Extraction performance

The plutonium extraction performance of the IBX Column was investigated at Oak Ridge National Laboratory (O.R.N.L.) in a 2-in.-diameter column with an 18-ft.-long "standard cartridge", the sieve-plate geometry to be used in the Purex Plant. Variables investigated included pulse amplitude and frequency, volume velocity, and extractant-to-raffinate flow ratio. The following table summarizes the results of these studies.

EXTRACTION PERFORMANCE OF THE IBX COLUMN
(O.R.N.L. DATA)

Volume Velocity, GPH/Sq. Ft., Sum of Flows	Tons U/Day[a]	IBX/IBU Volume Flow Ratio[b]	Ampl. x Freq., In./Min.[c]	H.T.U., Ft.[d]	% Pu Loss
270	7	0.11	70	2.2	0.11
			93	2.2	0.10
360	9	0.10	44	3.0	0.66
			50	2.7	0.36
			56	2.2	0.12
550	14	0.10	59[e]	2.1	0.09
			64[e]	2.0 to 3.6	0.06 to 1.5
			70[e]	2.0 to 3.0	0.06 to 0.7
		0.05	55[e]	2.0	0.28
			70[e]	2.0	0.26
		0.026	70[e]	2.0	3.9

Notes:

(a) Equivalent U processing rate in the 27-in.-diam. Purex-Plant IBX Column.
(b) Purex HW #3 Flowsheet IBX/IBU ratio = 0.066.
(c) Range of O.R.N.L. amplitudes was 0.75 to 1.26 in.; the frequencies used were 58 and 74 cyc./min. To obtain the equivalent Purex-Plant pulse frequencies, the tabulated amplitude-frequency products should be divided by 0.84.
(d) Calculation based on an average Pu E_a^o (or org./aq. distribution ratio) of 0.02.
(e) Operating conditions in the O.R.N.L. test runs were at or above the instability thresholds determined in H.A.P.O. flooding studies.

The H.T.U.'s calculated from the O.R.N.L. data under optimum operating conditions (ca. 50 to 80 per cent of the complete flooding frequency)

averaged about 2.0 to 2.2 ft., with no significant increase in waste losses observed when the IBX/IBU flow ratio was reduced from 0.1 to 0.05. With the Purex HW #3 Flowsheet flow ratio of 0.066, an H.T.U. not exceeding 3.0 ft. is required to obtain a plutonium loss less than 0.1 per cent; thus an H.T.U. scale-up factor of about 40 to 50 per cent is available in the Purex-Plant column against a possible adverse scale-up effect on going from the 2-in.-diameter O.R.N.L. experimental column to the 27-in.-diam. Plant column. This available scale-up margin is in line with scale-up effects observed in A and C-type columns in going from 3-in. to 24 and 27-in. diameters and indicates that satisfactory performance should be obtainable in the Plant column.

4.3 Effect of feed and extractant composition on performance

An increase in IBXF density (uranium concentration) and in the IBX HNO_3 concentration appeared to lower the flooding capacity. However, the above-discussed variability in flooding thresholds has rendered the extent of these capacity-reduction effects uncertain.

5. IB Scrub Column

The 8-in. diameter IB Scrub Column employs a 13.3-ft. height of "standard" stainless-steel sieve plates, with 20%-free-area louver plates at selected locations. A top interface position is employed. The pulse amplitude is 0.84 in.

The flooding characteristics and extraction effectiveness of the IB Scrub Column are presented in Figure V-20 as functions of the pulse frequency and the throughput rate.

The flooding volume velocity was not appreciably affected by varying the IBS-to-IBSF flow ratios from 40 to 120 per cent of the HW #3 Flowsheet value. A scale is appended to the plot to convert the volume velocity to the corresponding Purex-Plant uranium processing rates for IBS flows ranging from 40 to 100 per cent of flowsheet. The highest demonstrated stable throughput capacity corresponds to a uranium processing rate of 11 tons/day at about 100 per cent IBS flow; 25 tons U/day at 70 per cent IBS flow; and 24 tons U/day actually demonstrated, with 26 to 30 tons/day appearing attainable, at 40 per cent IBS flow.

The H.T.U.-vs.-volume velocity curves, with frequency parameters, also are essentially unaffected by the IBS/IBSF flow ratio within the range of 40 to 120 per cent of flowsheet. The plots in Figure V-20 indicate that the optimum frequencies, generally lying between 75 and 100% of the cyclic local flooding frequencies, range from about 60 to 70 cyc./min. at 300 gal./(hr.)(sq. ft.), sum of flows, (corresponding to 4 tons U/day with the HW #3 Flowsheet IBS-to-IBSF ratio) to the neighborhood of 45 cyc./min. at approximately 1600 gal./(hr.) (sq. ft.), sum of flows, (corresponding to 20 and to 30 tons U/day at 100% and at 40% of the flowsheet IBS flow, respectively). The H.T.U. values obtained at the optimum frequencies are generally in the 1.1 to 1.3-ft. range, yielding IBP streams containing on the order of

0.1% uranium based on the weight of plutonium at 200-megawatt-day/ton irradiation level (generally less than 0.1% at 600 megawatt days/ton).

In full-scale prototype IBS Column tests run under unstable conditions the losses appeared to be unaffected by cyclic local flooding. This behavior was contrary to that of most of the other columns tested and may not be typical of plant performance in sustained operation.

The effect of varying flow ratio on H.T.U.'s is shown in Figure V-21. At optimum frequencies, the H.T.U. remains relatively constant as the IBS-to-IBSF flow ratio is reduced from 120 to 40 per cent of the HW #3 Flowsheet value. The minimum IBS/IBSF flow ratio which may be used without gross increase in uranium contamination of the IBP stream is about 30 to 35 per cent of the HW #3 Flowsheet value.

6. 2A Column

The 2A Column is the only pulse column in the Purex Plant employing packing rather than sieve plates. The 7-in.-diameter dual-purpose 2A Column employs extraction and scrub packed sections 21 and 10 ft. high, respectively, both containing 1-in. fluorothene Raschig rings. The column is operated with the organic phase continuous, i.e., with the interface at the bottom. The pulse amplitude is 1.1 in.

The performance characteristics of the 2A Column, as a function of the pulse frequency and the throughput rate, are shown in Figure V-22. Unlike conventional sieve-plate pulse columns, an important countercurrent-flow throughput is obtainable in the packed 2A Column even in the absence of a pulse. Stable unpulsed operation is possible at volume velocities up to about 1400 gal./(hr.)(sq. ft.), sum of both phases in the extraction section, corresponding to an approximately 15-ton/day Purex-Plant uranium processing rate at HW #3 Flowsheet conditions. Application of a 30 to 40-cyc./min. pulse increases the stable throughput capacity of the column to the neighborhood of a maximum rate corresponding to 25 tons U/day. Above 40 cyc./min. the throughput capacity decreases with further increase in frequency. Scrub-section flooding tests have indicated that the flooding characteristics of the 2A Column are controlled by those of its extraction section.

"Cold" 2A Column tests at approximately full scale, in which uranium was used as a stand-in for plutonium, have yielded uranium losses below the limit of reliable analytical detection at a variety of operating conditions, indicating H.T.U. values of approximately 2.6 ft. or less, corresponding to plutonium losses in the neighborhood of 0.1% or less, over a wide range of frequencies at processing rates corresponding to up to about 20 tons U/day. In one determination at a throughput rate corresponding to 25 tons U/day a 3.0-ft. H.T.U. was measured, indicating a 0.4% plutonium loss at 37 cyc./min. Intermediate-scale tests with a shorter column (a 3-in.-diameter column with a 9-ft.-high packed extraction section) indicate the likelihood of plutonium losses from the 2A Column being well below 0.1%, possibly as low as 0.01% or less, at the most favorable conditions. Tests further indicate that at intermediate throughput rates (between about 5 to 12 tons U/day) plutonium

losses of approximately 0.1% or less may be obtained even without application of a pulse.

The plutonium waste losses shown on the auxiliary ordinate in Figure V-22 were estimated from the uranium H.T.U.'s (to which the plutonium H.T.U.'s were taken as being equal) by means of Colburn's equation (presented in Subsection A4).

7. 2B Column

The 7-in.-diam. 2B Column employs a 21-ft.-high "standard" sieve-plate cartridge, in conjunction with a top interface position. The pulse amplitude is 1.1 in. The flooding characteristics of the 2B Column are plotted in Figure V-23. The highest stable capacity demonstrated in the 8-in.-diameter experimental prototype of the column was equivalent to a Purex-Plant processing rate of 29 tons U/day.

"Cold" tests at approximately full scale (actually in an 8-in.-diameter column), in which uranium was used as a stand-in for plutonium, indicate plutonium losses of the order of 0.01% to be obtainable at favorable pulse frequencies at throughput rates corresponding to 3 to 29 tons U/day, as tabulated below:

Volume Velocity, Gal./(Hr.)(Sq.Ft.), Sum of Both Phases	Tons U/Day(a)	Ampl. x Freq., In./Min.(b)	H.T.U., Ft.(c)	% Pu Loss(c)
80	3	70	2.6	0.04
220	9	60	2.3	0.01
490	20	40	2.3	0.01
		50	2.4	0.02
510	21	40	2.2	0.009
720	29	40	1.8	0.009

Notes:

(a) Equivalent U processing rate for the 7-in.-diam. Purex-Plant 2B Column.
(b) The equivalent Plant frequency may be obtained by dividing the af product by the Plant amplitude, 1.1 in.
(c) The presence of uranium reflux in the bottom (feed) end of the column was corrected for by taking an intermediate sample 6 ft. above the feed point and basing H.T.U. calculations on its organic-phase U concentration (corrected for partial equilibration during sampling). In estimating Pu loss, (by Colburn's equation, presented under A4) U and Pu H.T.U.'s were taken as equal.

8. O-Type Columns

8.1 General

The two O-type (solvent-washing) columns -- IO and 20 -- employ plate sections similar to those of the C-type columns except for height: 26 ft. of 34-in.-diameter 4-in.-spaced fluorothene plates with 3/16-in. holes, 23% free area. (For the performance characteristics of O-type columns employing stainless-steel nozzle plates, a potential alternative to fluorothene plates, reference is made to Subsection D9.) The interface is maintained at the bottom. The pulse amplitude is 0.53 in.

At any given uranium tonnage rate the IO Column processes approximately 2.2 times as much spent solvent, from the HC and IC Columns, as is processed by the 20 Column, which receives spent solvent only from the 2E Column.

For a discussion of the solvent clean-up process carried out in the O-type columns reference is made to Chapter IX.

8.2 Flooding characteristics

The flooding characteristics of the O-type columns are plotted in Figure V-24. A maximum useful throughput in the neighborhood of 20 to 23 tons U/day is indicated for the IO Column and over 40 tons U/day for the 20 column, at a 1-to-3 scrub-to-solvent volume flow ratio.

8.3 Extraction performance

The extraction effectiveness of the O-type columns was measured in pilot-plant tests by uranium clean-up (uranium H.T.U.'s). These tests indicate that for efficient uranium clean-up in the IO Column the pulse frequency must be at or above about 70 per cent of the complete flooding frequency. At low processing rates it may be necessary to increase the scrub (IOS) rate, thereby increasing the volume velocity in the column and reducing the frequency requirement for good performance so that it falls within the frequency range available.

The following table indicates the relative effects of flow ratio and pulse frequency on uranium clean-up, as determined in a 3-in.-diameter column with a 6-ft.-high plate cartridge of the Plant-column design, operated at room temperature:

EFFECT OF FLOW RATIO AND FREQUENCY ON O-TYPE COLUMN PERFORMANCE

Equivalent U Processing Rate, Tons/Day		Frequency[a]		Aq./Org. Volume Flow Ratio	H.T.U., Ft.[b]
IO	20	Cyc./Min.	% of Flooding Frequency		
1	3	100	60	1.0	1.5
4	8	100	60	0.3	2.9
10	21	80	73	0.5	2.8
10	21	80	65	0.2	6.1
10	21	100	82	0.3	2.1

Notes:

(a) At 0.5-in. amplitude.
(b) Extraction factor (P) taken as effectively 0.

The H.T.U.'s in the table above cannot be readily applied to large-diameter column performance or to fission-product clean-up, but they should be useful in indicating the order of magnitude of the flow ratio and frequency effects on Purex-Plant O-type column performance.

8.4 Effect of temperature

Indirect data indicate a possible slight (10%/40°F.) increase in O-type column capacity at elevated temperature. Fragmentary tests fail to indicate a significant temperature effect on uranium clean-up in the 20 to 45°C. (up to 110°F.) range.

F. DECONTAMINATION

1. Introduction

The solvent-extraction principles discussed above are applicable to the problem of separation of contaminants (principally fission products) from uranium and plutonium in the Purex Plant. The relative inextractability into the solvent phase of the fission products (solvent/aqueous distribution ratios below 0.02 for most species) is the fundamental property which allows their almost quantitative separation.

The radioactive fission products of process significance are discussed in Chapter II. The chemistry and phase-distribution ratios of these fission products under Purex-process conditions are discussed in Chapter IV. This section of Chapter V discusses the application of solvent-extraction theory to the problem of product decontamination and presents pilot-plant data which demonstrate decontamination performance and the effects of process variables.

2. Design Basis for Decontamination

The extent of fission-product decontamination required by Purex-Plant processing must be sufficient to insure uranium and plutonium products which meet the activity specifications stated in Chapter I. The required decontamination depends principally on the initial activities of the irradiated slugs which, in turn, depend on their irradiation history.

For example, for uranium slugs irradiated to 200 megawatt-days per ton, at 5 megawatts/ton, and "cooled" for 90 days, beta and gamma activity in dissolver solution is approximately 0.28 and 0.17 (theoretical) curies, respectively, per gram of uranium. An acceptable separations-plant uranium product contains beta and gamma activities not exceeding 100 per cent of the activities of natural uranium (see Chapter I), corresponding approximately

to 3.4×10^{-7} beta curies and 1.6×10^{-8} gamma curies per gram of uranium. To meet this specification, beta and gamma arithmetic decontamination factors for uranium of approximately 8×10^5 and 1×10^7, respectively, are required. (For a definition of "decontamination factor" reference is made to Chapter I.) Based on pilot-plant and current production experience, some decontamination (perhaps of the order of a factor of 2) may be effected during the conversion of the Purex-Plant product to UO_3; however, the extent depends on the fission-product spectrum of the uranium processed. For the plutonium product, specifications as outlined in Chapter I require Purex-Plant beta and gamma decontamination factors of approximately 3.5×10^7 and 2×10^7, respectively, assuming the curies of beta and gamma activity in the product are equal.

Under HW #3 Flowsheet conditions, Purex-Plant over-all decontamination factors are effected primarily in three solvent-extraction cycles. Most of the decontamination is accomplished in the extraction columns (viz., the HA, IA, 2A, and 2D Columns); however, the stripping columns (viz., the HC, IC, 2B, and 2E) also contribute. In the IB Extraction and Scrub Columns, where the primary separation of uranium and plutonium occurs, the fission products are divided between the uranium and plutonium streams. Individual solvent-extraction-cycle decontamination factors are greatest over the first cycle, becoming successively smaller in the second and third cycles as the proportion of more easily removed species decreases.

The Purex Plant includes features and provisions for process improvements, the full development of which may add additional decontamination to the factors estimated on the basis of the HW #3 Flowsheet:

(a) Space is available to accommodate equipment necessary for the addition of a head-end step (see Chapter III).
(b) Full development of dual-scrub operation of certain extraction columns may result in improved decontamination factors.
(c) Provisions have been made for the possible future addition of a silica-gel adsorption step for the improvement of uranium decontamination factors.
(d) Development of the Alternative (reflux) Plutonium Decontamination Cycle may result in improved plutonium decontamination.

3. Mass Transfer of Fission Products

Normal mass-transfer concepts are useful in explaining the function of solvent-extraction columns in the removal of contaminants (e.g., fission products) from uranium and plutonium product streams. Under some conditions, for which distribution ratios are known and reproducible, the number of transfer units, or equivalent stages, required to attain a desired D. F. for a contaminant may be estimated. Under other conditions, for which distribution ratios are not known with certainty, practical application of mass-transfer theory is limited. In either case an understanding of mass transfer in relation to decontamination is necessary for the proper evaluation of contaminant distribution ratios, as experimentally determined in the laboratory.

Decontamination of uranium and plutonium by mass transfer in pulse columns has been demonstrated at the Oak Ridge National Laboratory. Thus, as would be predicted on the basis of mass-transfer theory, decontamination fractors for the O.R.N.L. IA Column (analogous to the Purex-Plant HA Column) were of the order of 10^2 to 10^5 (99 to 99.999% removal) for fission products. From 0.001 to 1% of the fission products in the IAF remained in the IAP because of the factors listed below:

(a) Insufficient height of the scrub section.
(b) Distribution coefficient (E_a^o) values relatively unfavorable for stripping (i.e., E_a^o in the range of 0.01 to 0.4).
(c) The so-called "inextractable" (or, more correctly, "unstrippable" or "unscrubbable") behavior of certain fission products, due to complexing in the organic phase or formation of organic-favoring forms (see under F4, below). Although the fraction of the total amount of fission products which exhibits this behavior is low, it is nonetheless important because the over-all D.F.'s required for the Purex process are approximately 10^6 to 10^7.

3.1 Fission-product operating diagrams

The basic principles for the construction of operating diagrams are explained in Section B, above. As indicated in Section B, equilibrium data are an essential element in the diagrams. For fission products, equilibrium data under Purex flowsheet conditions (e.g., HW #3 Flowsheet conditions) are incomplete and probably approximate, at best. Data which have been published are generally limited by the following factors:

(a) Laboratory batch-contact stages are not necessarily 100% efficient. Loss of efficiency may be caused by factors such as insufficient agitation or entrainment between phases.
(b) The effects of some variables, such as fission-product concentrations and acidity, on E_a^o values have not been completely evaluated.
(c) Increases in E_a^o values with increase in the number of stages have been noted for some fission products. This may be caused by the initial removal of low-E_a^o species of a particular F.P.

Thus, the use of operating diagrams for estimating the number of transfer units (or theoretical stages) is generally considered impractical.

3.2 D.F. as a function of the number of scrub transfer units

For many fission products, values of E_a^o may be approximated. For example, for a point in the scrub section of the HA Column where the HNO_3 concentration in the aqueous phase is 3 M and the organic phase is approximately 70% saturated with respect to uranium the value of E_a^o for zirconium is approximately 0.015. (See Chapter IV, Section C.) For such cases, the Colburn equations (presented under A4.09 and A4.10, above) are often useful in explaining the relationships between values of E_a^o for fission products and decontamination performance in solvent-extraction columns. Their use involves the assumption of straight operating and equilibrium lines, an assumption that is approximately correct for the scrubbing of some fission products under some flowsheet conditions.

[redacted]

3.21 D.F. vs. N_t for A-type column with single scrub

For a particular fission product in an A-type column operating with a single scrub stream, the over-all arithmetic decontamination factor ($D.F._O$) is equal to the product of the feed-plate decontamination factor ($D.F._F$, which is effected by transfer of only a fraction of the F.P.'s from the aqueous feed, e.g., IAFS, to the organic extractant, e.g., IAX) and the scrub-section decontamination factor ($D.F._S$). In terms of volumetric flow rates and solute (F.P.) concentrations:

$$D.F._F = \frac{X_f\ A_f}{Y_1\ O_1}$$

$$D.F._S = \frac{Y_1\ O_1}{Y_2\ O_2}$$

$$D.F._O = \left[\frac{X_f\ A_f}{Y_1\ O_1}\right]\left[\frac{Y_1\ O_1}{Y_2\ O_2}\right] = \frac{X_f\ A_f}{Y_2\ O_2}$$

where
A_f = volume of aqueous feed per unit of time;
O = volume of organic phase per unit of time;
X_f = solute (F.P.) concentration in the aqueous feed;
Y = solute concentration in the organic phase;

and the subscripts 1 and 2 refer to influent and effluent conditions, respectively.

Again, for this same case, the Colburn equation relates the number of transfer units, N_t, in the scrub section to the scrub-section distribution ratio, $(E_a^o)_S$, and $D.F._S$:

$$N_t = \frac{2.3 \log\left[(1-P)\ M + P\right]}{1-P} \quad \ldots\ldots\ldots\ldots\ldots\ldots\ldots\ldots \quad (1)$$

where $P = \frac{m\ O}{A_s}$;

$\frac{O}{A_s}$ = reciprocal of the slope of the operating line (volume of organic phase per unit of time)/(volume of aqueous (scrub) phase per unit of time);

m = slope of the equilibrium line (= $(E_a^o)_S$ for a straight line);

$M = \frac{Y_1 - X_x\ m}{Y_2 - X_x\ m}$;

Y_1 = solute (F.P.) concentration in the organic influent stream;

Y_2 = solute concentration in the organic effluent stream;

X_x = solute concentration in the aqueous influent (scrub) stream.

Under conditions of a single scrub, $X_x = 0$ and $M = Y_1/Y_2$. Also, O_1 and O_2 are essentially equal, so that

$$D.F._S = \frac{Y_1\ O_1}{Y_2\ O_2} = \frac{Y_1}{Y_2} = M$$

Thus $D.F._S$ may be substituted for M in the Colburn equation.

The over-all decontamination factor, $D.F._O$, may be related to the scrub-section decontamination factor, $D.F._S$, by the application of feed-plate and scrub-section material balances and the assumption that the aqueous and organic solute concentrations at the feed point are essentially at equilibrium, a generally valid assumption:

$$D.F._O = \frac{M}{(E_a^o)_F\ O}\ (A_f + A_s) - M + 1 \ldots\ldots\ldots\ldots (2)$$

where $(E_a^o)_F$ equals the feed-plate distribution ratio and all other terms have been previously defined.

When $(E_a^o)_F$ and $(E_a^o)_S$ are approximately equal, which may often be approximately the case, the above equations can be used to express N_t in terms of this distribution ratio and $D.F._O$.

Equations analogous to those presented above may also be developed in terms of the number of theoretical stages, N_s (see under A4.09, above).

The use of the above equations may be illustrated by a sample calculation of the number of transfer units required to attain a $D.F._O$ equal to 800 for a fission product with $(E_a^o)_S$ and $(E_a^o)_F$ equal to 0.015. Relative flows are given as $A_f:A_s:O = 1.0:0.67:3.33$. By Equation (2),

$$800 = \frac{M}{(0.015)\ (3.33)}\ (1.0 + 0.67) - M + 1$$

$$M = 25$$

For use in Equation (1),

$$P = \frac{E_a^o\ O}{A_s} = \frac{(0.015)\ (3.33)}{0.67} = 0.075$$

Substituting M and P into Equation (1),

$$N_t = \frac{2.3 \log \left[(1-0.075)\ 25 + 0.075\right]}{1-0.075}$$

$$N_t = 3.4$$

[redacted] [redacted]

3.22 D.F. vs. N_t for A-type column with dual scrub

For a dual-scrub A-type column (e.g., the HA Column) operating under HW #3 Flowsheet conditions the relationship of N_t to D.F. and E_a^o is complicated by the following factors:

(a) For the two scrub sections, values of A_s and E_a^o are not equal.
(b) An additional variable, viz., the solute (F.P.) concentration in the aqueous influent to the lower scrub section, is introduced to the relationship.
(c) Because of the variable acid concentration under HW #3 Flowsheet conditions, values of E_a^o are known to vary in the upper scrub section; e.g., for zirconium the distribution ratio may vary from less than 0.001 to approximately 0.003.

In the following discussion, let the subscripts T and B refer to the top and bottom scrub sections, respectively. Assuming constant (or average) values of $(E_a^o)_T$ and $(E_a^o)_B$ for a particular F.P., $(N_t)_T$ and $(N_t)_B$ may be defined by the Colburn equation. Referring to Equation (1), above, for the upper scrub section, M_T is equal to $D.F._T$. For the lower scrub section the solute concentration in the influent aqueous scrub stream is not zero; therefore M_B does not equal $D.F._B$. However, by use of material balances, M_B can be defined in terms of $D.F._T$ and $D.F._B$:

$$\frac{M_B - D.F._B}{M_B - 1} = \frac{(E_a^o)_B \; O}{A_s} \left(1 - \frac{1}{D.F._T}\right) \qquad (3)$$

where A_s refers to the total volume of aqueous scrub per unit of time, and all other terms have been previously defined. Also, for the dual-scrub case an expression analogous to Equation (2), above, defines $D.F._O$ (resulting from 2 scrub sections plus the feed plate) in terms of the scrub-section D.F.'s:

$$D.F._O = (D.F._T)\,(D.F._B)\left[\frac{A_f + A_s}{(E_a^o)_F \; O}\right] - (D.F._T)\,(D.F._B) + 1 \qquad (4)$$

in which all terms have been previously defined. For the dual-scrub case, solution of the above equations and the Colburn equation requires that a relationship between $D.F._T$ and $D.F._B$ be estimated or assumed. A relationship based on the assumption of equal transfer-unit heights in the top and bottom scrub sections is a convenient rough approximation.

4. The "Irreversible" Extraction of Some Fission Products

It has been observed in laboratory and pilot-plant studies that certain fission products, or -- as is more often the case -- small fractions of certain fission products, under some conditions extract initially into the organic phase and cannot be subsequently scrubbed back into the aqueous phase. Such "irreversible" extraction behavior has been explained in terms of two mechanisms, both

of which undoubtedly occur to some extent in the Purex process.

One of the possible mechanisms is the formation of an organic-favoring complex compound of the fission product in question with some other solute. Zirconium may be thus complexed by DBP (dibutyl phosphate), formed by the hydrolysis of TBP. Other complexes may be formed with unknown impurities. Because of the extremely low concentration in which the individual fission products are present (on the order of 10^{-5} to 10^{-4} M in the HAF stream) a very low concentration of complexing agent could be effective.

Another possible mechanism is the presence of certain fission products in more than one chemical form, some with low and some with high distribution ratios. A discussion of this mechanism in relation to ruthenium is presented in Section C of Chapter IV.

In addition to that of ruthenium, "irreversible" behavior by zirconium, niobium, and iodine has, in some instances, been reported.

5. Pilot-Plant Decontamination Performance

Decontamination of uranium and plutonium from fission products, as well as from each other, by means of the Purex process has been demonstrated by experimental studies, including (a) laboratory studies at several A.E.C. sites; (b) "hot" pilot-plant studies in pulse columns at Oak Ridge National Laboratory; and (c) "hot" pilot-plant studies in mixer-settlers at the Knolls Atomic Power Laboratory. In addition, laboratory studies and "hot" pilot-plant studies, in mixer-settlers, of the Halex process (a Purex-type process utilizing a chlorinated-hydrocarbon, instead of a kerosene-type, diluent) were conducted at the Argonne National Laboratory. Pilot-plant decontamination performance data, including data showing the effects of flowsheet and equipment variables, are presented below.

5.1 Oak Ridge pilot-plant studies

The use of pulse columns for the decontamination of uranium and plutonium under Purex-process conditions was successfully demonstrated at the Oak Ridge National Laboratory. A two-year development program, during which the majority of runs were made using uranium slugs of Hanford production-level activity, resulted in the accumulation of data concerning fission-product behavior of basic importance to the design of the Purex Plant.

The O.R.N.L. pilot-plant program consisted primarily of a group of 34 runs, divided into three series. In the first series of 14 runs, flowsheet and pulse-column characteristics were scouted. Commencing with the second series of 15 runs, the Purex process as demonstrated at Oak Ridge included feed preparation, without head-end treatment, followed by continuous processing through a first extraction-partition cycle, individual uranium and plutonium second cycles, silica-gel treatment of the uranium product stream, resin-bed plutonium isolation, solvent recovery, and volume reduction of fission-product waste streams with recovery of nitric acid. For one run a third solvent-extraction uranium cycle was included. The final series of

five runs was designed to develop information concerning certain specific design variables at Hanford.

Table V-1 is a detailed summary of the decontamination performance of O.R.N.L. pilot-plant pulse columns, based on averages of runs selected from the second series. The runs selected were those which were conducted without recognized major flowsheet or equipment deviations. Although they were made under conditions similar to those defined by the HW #3 Flowsheet, there were three important differences:

(a) The O.R.N.L. flowsheet included IA, IB, and IC first-cycle columns and omitted a third cycle.
(b) Extraction columns were operated with single scrub streams only.
(c) Centrifugation during solvent recovery was not included in the flowsheet for the runs tabulated. This technique was employed for a very limited number of third-series runs (see under F5.36, below) which were, in general, not representative.

A summary of gross beta and gross gamma decontamination factors, based on Table V-1, is tabulated below.

	Arithmetic Decontamination Factors	
	Pu	U
First Extn. Cycle:		
Gross beta	6.2×10^3	2.5×10^4
Gross gamma	1.8×10^3	6.0×10^3
Two Cycles:		
Gross beta	1.3×10^7 (a)	4.1×10^6 (b)
Gross gamma	3.5×10^6 (a)	1.5×10^6 (b)

Notes:

(a) Corrected for Pu activity.
(b) Corrected for $UX_1 + UX_2$ and U-237 activities.

For the runs tabulated above, the principal fission-product contaminants in the plutonium product were zirconium and niobium. Subsequent processing of the solvent-extraction plutonium product through ion-exchange equipment increased the beta and gamma D.F.'s to 4.7×10^7 and 2.4×10^7, respectively.

Again, according to O.R.N.L. experience, principal fission-product contaminants in the uranium product from two solvent-extraction cycles were ruthenium, niobium, and, to a lesser extent, zirconium. For the runs tabulated above, subsequent absorption of niobium and zirconium in a silica-gel column increased gross beta and gamma D.F.'s to 5.9×10^6 and 4.0×10^6, yielding a product whose principal contaminant was ruthenium. O.R.N.L. two-cycle D.F.'s and D.F.'s required for the Purex Plant are compared under F5.4, below.

5.2 Other pilot-plant studies

Other Purex, or Purex-type, process pilot-plant studies were conducted at the Knolls Atomic Power Laboratory (K.A.P.L.) and at the Argonne National Laboratory (A.N.L.). K.A.P.L. studies differed from those of O.R.N.L. primarily in that mixer-settlers were used instead of pulse columns and additional decontamination by head-end, rather than tail-end, treatment was studied. A.N.L. studies were mixer-settler studies of the Halex process, similar to the Purex process except that the diluent for the TBP is a halogenated hydrocarbon (generally CCl_4) of a density greater than that of the aqueous phase. Also, at A.N.L. two solvent-extraction cycles were studied without head-end or tail-end treatment. Neither the K.A.P.L. nor the A.N.L. flowsheets included co-decontamination cycles.

K.A.P.L. and A.N.L. gross beta and gross gamma decontamination factors for one and two solvent-extraction cycles are shown by Table V-2. The values presented are averages of runs for which flowsheets most nearly like the O.R.N.L. flowsheet (see Table V-1) were used.

5.3 Effects of variables

5.31 Effect of pulse amplitude-frequency product

The effect of pulse amplitude-frequency (af) product on decontamination performance was studied at O.R.N.L. during Runs IHP-4 and IHP-5 and again during Runs HCP-17 and HCP-18. Under the conditions of Runs IHP-4 and IHP-5 an approximately two-fold increase in af product resulted in approximately three-fold increases in gross gamma and gross beta decontamination factors.(7,19) The run conditions and results of Runs HCP-17 and HCP-18 are shown by Table V-3.

As shown by Table V-3, reduction of the IA-Column pulse amplitude from 0.94 to 0.74 in. and from 0.74 to 0.54 in. (at a constant frequency of 58 cycles/min.) resulted in corresponding reductions in IA Column D.F.'s, with data based on analysis of the IBP stream appearing to be the most consistent.(15,16) The over-all reduction from 0.94 to 0.54 in. (corresponding to reduction in af product from 54 to 31 in./min.) impaired D.F.'s for gross beta, gross gamma, ruthenium, zirconium, and niobium approximately by factors of two. For iodine decontamination in the IA Column is negligible; hence, af-product variation produced no noticeable effect on iodine carry-over with the extract stream.

5.32 Effect of scrub-section height

During O.R.N.L. Runs HCP-17 and HCP-18, the 2D Column was operated under practically identical conditions except that for the latter run the height of the 2D Column scrub section was reduced from 13 to 9 ft. by the removal of a section of perforated plates. A comparison of the 2D Column D.F.'s for these two runs, which are tabulated below, shows no significant change in 2D Column D.F.'s. (15,16)

Run No.	HCP-17*	HCP-18*
2D Column Scrub-Section Height, Ft.	13	9
2D Column Arithmetic D.F.'s:		
Gross beta	34	26
Gross gamma	55	47
Ru beta	85	87
Zr beta	23	45
Nb beta	72	116
I beta	9.5	11

*) Run conditions and pulse-column designs are accurately described by Table V-1 except for the change in scrub-section height indicated above and the following additional factors:

(1) The organic phase was continuous in the IC Column.
(2) The pulse amplitude in the IA Column was 0.74 in. (vice 0.94 in.).
(3) Continuous treatment of the solvent included centrifugation.
(4) The uranium saturation of the solvent at the 2D Column feed point was 3% higher than normal.
(5) For HCP-18 ferrous ammonium sulfate-sulfamic acid mixture was used in place of ferrous sulfamate as the Pu reductant in the IB Column.

During another pair of O.R.N.L. runs, IHP-5 and IHP-6, no change was made in IA Column operating conditions except for an increase in scrub-section height from 12.5 to 18 ft. Again, no significant change in IA Column D.F.'s resulted.[19,20]

5.33 Effect of volume velocity

The effect of pulse-column volume velocity on D.F.'s was studied at O.R.N.L. during Run HCP-8. Parts A, B, and C, of this run, were operated under essentially identical conditions except that for Parts B and C the flow rates were halved and for Part C the pulse amplitudes in the IA, IB, and 2D Columns were increased by about 30%. The resulting D.F.'s for first-cycle operation are presented in Table V-6. Although the data for Part C illustrate the effect of af product (see under F5.31, above), rather than volume velocity, they are included here to illustrate the relative magnitudes of these two effects as well as to indicate to what extent D.F. impairment upon throughput-rate reduction may be remedied by use of higher amplitude-frequency products at the lower rates.

As shown by Table V-6, halving of the processing rate which involved a reduction in the IA Column scrub-section volume velocity from 470 to 235 gal./(hr.)(sq. ft.), sum of flows, was accompanied by a consistent, approximately two-fold, reduction in D.F.'s for the IA Column and for the first-cycle uranium and plutonium streams. Increasing the IA Column pulse amplitude (and, therefore, af product) by 30% at the lower throughput rate was accompanied by an

increase in D.F.'s approximately to the values of the higher-rate part of the run. Two-cycle results for this run showed similar trends, although D.F.'s for individual second-cycle columns were erratic.(11)

5.34 Effect of solvent-phase uranium saturation in the IA Column scrub section

For O.R.N.L. runs under the flowsheet conditions described by Table V-1, the TBP in the IAP was approximately 73 per cent saturated with respect to complexed uranium. For the HW #3 Flowsheet the HAP (corresponding to the O.R.N.L. IAP stream) is about 68 per cent saturated. During O.R.N.L. Runs HCP-19 and 20, the effect of varying the uranium solvent saturation in the IAP stream (and, therefore, the IA Column scrub section) on the IA Column D.F.'s was studied. Data for these runs, compared to two otherwise similar O.R.N.L. runs, are shown by Table V-4.

According to Table V-4, at a IA Column pulse amplitude of 0.74 in. (compared to the normal 0.94 in. for most O.R.N.L. runs) a reduction of IAP saturation from 75 to 60 per cent caused no significant change in IA Column D.F.'s for the individual fission products, except, possibly, for niobium and, less likely, for ruthenium. A further decrease in saturation to 50 per cent, however, impaired D.F.'s for gross beta, gross gamma, ruthenium, zirconium, and niobium by factors ranging from approximately 2, for ruthenium, to nearly 50, for zirconium. Reduction of the pulse amplitude to 0.54 in., with 50 per cent saturation, resulted in factors of reduction approximately twice as large.

5.35 Effect of acid concentration

A major objective of mixer-settler pilot-plant studies of the Purex process was the investigation of solvent-extraction performance using flowsheets which minimize nitric acid consumption by means other than acid recovery. Accordingly, pilot-plant runs were made at K.A.P.L. for the purpose of comparing so-called "high-acid" flowsheets of the O.R.N.L. type (see Table V-1; also Table V-2, for flowsheet conditions designated ORNL-846, Rev.) to "low-acid" flowsheets featuring reduced HNO_3 concentrations, principally in the IAF and IAS (e.g., KAPL #5, the most successful first-cycle low-acid type). First-cycle decontamination results of runs using ORNL-846, Rev. and KAPL #5 flowsheets are shown in Table V-5.

A comparison of first-cycle results for high-acid and low-acid flowsheets, based on Table V-5, indicates the following:

(a) Gross beta D.F.'s for the high-acid flowsheet show slight superiority.
(b) Using the high-acid flowsheet, decontamination of the IBP stream from ruthenium is superior by an approximate factor of three.
(c) For gross gamma and Zr + Nb activities, low-acid results are superior by approximate factors of 2 for the IBP stream; high-acid results show corresponding superiority for the ICU stream. This difference may be caused by different fission-product splits in

the IB extractor, with a greater fraction of Zr + Nb following the IBP stream during high-acid runs.*

A comparison of two-cycle results, using high-acid and low-acid first-cycle flowsheets and second-cycle flowsheets described by Table V-2, indicates the following:

(a) With respect to uranium, a high-acid flowsheet resulted in better decontamination from gross gamma and Zr + Nb by factors approaching two.
(b) On the basis of only three high-acid and two low-acid runs, the high-acid flowsheet plutonium decontamination was superior by approximate factors of two for gross beta and ruthenium, but slightly poorer for Zr + Nb.

5.36 Effects of other variables

Interface location: Ordinarily, all O.R.N.L. pilot-plant runs were made with the aqueous phase continuous (top interface). However, during some runs the effects on D.F.'s of variations in "interface location" were studied. For these runs the pulse columns employed stainless-steel sieve plates. The column designs were those described in Table V-1.

During HCP-12, Part B, the IB and 2D Columns were operated with interfaces just below the feed plate and the 2E Column was operated with the organic phase continuous. For the IB Column, resulting D.F.'s indicated a change in fission-product split, resulting in concentrations of ruthenium, zirconium, and niobium in the IBP of approximately one-fourth, three, and fifteen times normal. For the 2D Column, the resulting D.F.'s were approximately normal. For the 2E Column, essentially no decontamination was effected except for gross gamma, which was reduced by a factor of approximately 3 from normal (see Table V-1).

During HCP-17, 18, and 19, the organic phase was continuous in the (stainless-steel sieve-plate-using) IC Column. No significant changes in D.F.'s were noted.

Radioactivity of the solvent: For the O.R.N.L. runs, the results of which are tabulated in Table V-1, recovered first-cycle solvent (ICW) was successfully used to feed first-cycle and second-plutonium-cycle columns. A study of

---

*) According to O.R.N.L. experience with the flowsheet shown on Table V-1, a IB Column fission-product split in which the bulk of the zirconium and niobium activities follows the IBP stream is desirable because the second-plutonium-cycle flowsheet is superior to the second-uranium-cycle flowsheet in decontamination from these fission products.

the effect of solvent contamination on second-uranium-cycle data resulted in the recommendation of a separate solvent recovery system for that cycle.

During the first half of Run HCP-2 the gamma activity of the solvent fed to the second uranium cycle corresponded roughly to the activity of solvent recovered from the second uranium cycle alone (of the order of 10 microcuries/gal.). During the second half of HCP-2 the gamma activity of solvent fed to the second uranium cycle was approximately 15 times as large, judged to be about the minimum level possible for combined solvent recovered from the first and second cycles. The increase in activity of the solvent in the second uranium cycle decreased two-cycle gross beta and gamma D.F.'s by approximate factors of two.

Solvent centrifugation: O.R.N.L. Runs HCP-16 and 17A were made under essentially the conditions described by Table V-1 except that the solvent was centrifuged during the recovery operation for the purpose of removing activity being carried by entrained solids. Resulting first-cycle D.F.'s for zirconium and niobium in the IBP stream and niobium in the ICU stream showed improvement by approximate factors of three. Two-cycle results for the plutonium and uranium streams were similarly improved. Also, during these and O.R.N.L. runs which followed, solvent centrifugation may have been responsible for a change in the fission-product split in the IB Column, with a smaller faction of activities (primarily zirconium and niobium) following the organic-phase uranium stream (IBU).

Treatment of 2DF with $NaNO_2$ or NO_2: Commencing with O.R.N.L. Run HCP-9B, the second-uranium-cycle flowsheet included treatment of the second-cycle feed with NO_2 gas or $NaNO_2$ at 60 to 80°C. An improvement in ruthenium D.F. was the principal change observed. A comparison of two-cycle results shows ruthenium and gross beta D.F.'s higher by approximate factors of 3 and 2.5, respectively, for runs made with nitrite (or NO_2) treatment of the 2DF.

The results of pilot-plant studies of other variables are briefly summarized below.

(a) K.A.P.L. mixer-settler studies showed no difference in D.F.'s resulting from the use of three different diluents of the kerosene type, viz., Ultrasene, Gulf-BT, and Amsco-123.

(b) O.R.N.L. data showed no correlation between D.F.'s and slug history, for irradiation levels and "cooling" times in the ranges of 100 to 718 MWD/T and 60 to 340 days, respectively.

(c) O.R.N.L. and A.N.L. (Halex process) studies indicated no D.F. dependency on inclusion or omission of IAF treatment with $NaNO_2$ or NO_2 (for plutonium valence adjustment).

(d) O.R.N.L. studies indicated no change in D.F.'s resulting from heating the ICX or 2EX stream to 60°C. and 50°C., respectively.

5.4 Pilot-plant D.F.'s vs. Purex-Plant requirements

The table below compares Purex-Plant gross beta and gross gamma D.F. requirements when processing low-level slugs (200 MWD/T; see under F2, above) with O.R.N.L. two-cycle D.F. results (see Table V-1).

	Required Purex-Plant D.F. (a)	O.R.N.L. Pilot-Plant 2-Cycle D.F.'s (c)
Uranium:		
Gross beta	8×10^5 (b)	4.1×10^6
Gross gamma	1×10^7 (b)	1.5×10^6
Plutonium:		
Gross beta	3.5×10^7 (d)	1.3×10^7
Gross gamma	2×10^7 (d)	3.5×10^6

Notes:

(a) For uranium slugs irradiated to 200 MWD/T at 5 MW/T and "cooled" for 90 days (see under F2, above). If high-level slugs of the type currently being produced (e.g., 600 MWD/T, 5 MW/T, 90 day "cooled") are processed, the D.F.'s required to yield a uranium product of the same activity will be higher by an approximate factor of 2 because of the correspondingly greater amount of initially associated fission-product activity. For plutonium, the required D.F. would be decreased approximately 1.5-fold because of the higher concentration of plutonium per ton of uranium.
(b) Assuming no decontamination is effected during subsequent processing steps in other facilities.
(c) From Table V-1.
(d) Assuming the curies of beta and gamma activity in the product are equal.

On the basis of this tabulation, the gross beta specification for uranium has been met at O.R.N.L. with two pulse-column solvent-extraction cycles. However, additional gross gamma D.F.'s of approximately 7 and 3 are required for uranium and plutonium, respectively, and an additional gross beta D.F. of approximately 3 is required for plutonium.

In the Purex Plant, three solvent-extraction cycles are provided for attaining the required D.F.'s. In addition, the Purex-Plant process includes solvent centrifugation and other features, not utilized in attaining the two-cycle results tabulated above, for further improving decontamination performance. (See under F2, above.)

G. USE OF COLUMN PRESSURE INSTRUMENTS

1. Apparent Specific Gravity in a Pulse Column

A bubbler-type pressure instrument has been provided for each column for

the purpose of measuring the static pressure of the column contents. The pressure-transmitting instrument actually transmits to the recording instrument the differential pressure between the static-pressure dip tube at the bottom of the column and another dip tube located either at the top of the column or at the top of a nearby vessel connected to the column top via the Vessel Vent Header. (The latter method is employed in connection with the C-type and 2A Columns, while other columns utilize the first-mentioned arrangement.)

The recording instrument is calibrated to measure the static pressure in inches of water. The apparent specific gravity can readily be calculated by dividing the inches of water measurement by the vertical distance from the outlet of the static-pressure dip tube in the bottom disengagement section to the organic overflow point, or to the top dip tube in the top disengagement section in those columns provided with dip tubes at the top. The following table lists this height for each column:

Column	Liquid Height Measured by Static-Pressure Instruments, In.
HA, IA, 2D	387
HC, IC, 2E	271
IBX	385
IBS	217
2A	475
2B	346
IO, 2O	381

The pressure transmitted by the static-pressure dip tube may be affected by pressure fluctuations produced by the pulser. These harmonic waves can be dampened by "snubbing" the dip-tube line at the pneumatic transmitter, as explained in Chapter XVII. At this writing, however, the static-pressure transmitters are not snubbed so that the static-pressure readings may not have direct quantitative significance.

2. Effect of Flow Rate and Pulsing Conditions on Column Apparent Specific Gravity

In general, any change in the column operation which tends to increase the column holdup of the dispersed phase will cause the apparent specific gravity of the column to tend towards the specific gravity of the dispersed phase. Thus increasing the volume velocity (sum of both phases), the flow rate of the dispersed phase, or the pulse frequency in the HA Column, for example, will cause the apparent specific gravity to decrease. In the C-type, 2A, and O-type columns, the reverse will be true, since the lighter -- organic -- phase is continuous: here an increase in flow rate or frequency will cause the apparent specific gravity to increase.

Increasing the pulse frequency may be expected to increase the error introduced by pressure fluctuations produced by the pulse in columns without

static-pressure dip-tube snubbing, as mentioned in G1, above. A possibly approximately valid correction may be applied by calculating the percentage error in static pressure produced when pulsing the columns filled with water at various frequencies.

3. Indications of Flooding

A sharp decrease in the specific gravity of the aqueous-phase-continuous columns will occur as the columns approach incipient flooding, with the reverse occurring in the organic-continuous columns. This sharp change in static pressure or specific gravity is attributable to gross buildup of the discontinuous phase in the column at flooding or near-flooding conditions.

A similar but much more gradual change in apparent specific gravity occurs when flooding is caused by emulsification. This type of flooding is sometimes characterized by the gradual accumulation of the dispersed phase as a tightly packed emulsion, which may, in time, leave the column through the continuous-phase outlet. This gradual change in static pressure with emulsification differs from that normally occurring with a change in frequency or flow rates in that it does not tend to reach a steady position after a few minutes of operation.

4. Indications of Instability

Cyclic forms of instability, such as cyclic local flooding, often occur at operating conditions slightly less severe than those that cause complete flooding. This instability is characterized by cyclic buildup of the dispersed phase in the column until it develops enough "head" to channel its way through the continuous phase. It can generally be detected by cyclic variations in the static pressure.

5. Indications of High Uranium Loss

High uranium loss in the A-type columns may sometimes be diagnosed from an increase in the apparent specific gravity. For example, in the HA Column operating normally with 0.01% uranium loss the average specific gravity will be about 1.075 (assuming that the H.T.U. is constant, that about 20% of the volume is occupied by the organic phase, and neglecting the possible effect of countercurrent flow on the static pressure). With an increase in U loss to 1% the average specific gravity will rise to about 1.082; with a further increase to 10% U loss, the average specific gravity will rise to 1.100. In actual practice the change in specific gravity may be magnified by decreased organic holdup in the column as the waste loss increases. High uranium concentration in the extraction section of the A-type columns has been observed to inhibit the formation of the desirable emulsion-type operation, thus decreasing the amount of organic-phase holdup.

A similar increase in apparent specific gravity may be expected to occur in the C-type columns as the waste loss increases. However, in these columns a reduction in dispersed-phase holdup which might be expected to occur with increased uranium concentration in the columns (as experienced in the A-type

columns) would tend to mask, rather than to magnify, the specific-gravity change attributed to increased U loss.

Although the static-pressure instruments are useful in detecting unusually high U losses, a specific-gravity increase is not necessarily a a reflection of increasing uranium loss: it may often be due to other causes, notably to a change in the dispersed-phase holdup unrelated to uranium loss. For example, decreasing the organic holdup in the above HA Column from 20% to 15% of the liquid volume (with the U loss remaining constant at 0.01%) will increase the average specific gravity from 1.075 to 1.086, a change greater than that occurring in going from 0.01% U loss to 1% U loss.

H. SPECIAL PROBLEMS

The expectation of continuous satisfactory performance of the Purex-Plant solvent-extraction columns over long periods is based on hundreds of hours of trouble-free operation in pilot-plant studies. This section summarizes experimental information on "inextractable" uranium and plutonium, "crud" formation, emulsifying impurities and emulsification, and pulse loss or distortion. In exceptional circumstances, such effects may give rise to anomalous column behavior. Normally, however, such effects occur only to a harmless extent.

1. "Inextractable" Uranium and Plutonium

Both monobutyl and dibutyl phosphates (MBP and DBP), decomposition products of TBP, and possibly some other potential impurities, form stable complexes with uranium and plutonium. The complex formed with MBP is strongly aqueous favoring and only sparingly soluble in Purex aqueous and organic streams; the presence of MBP in the extraction columns generally causes corresponding amounts of uranium and/or plutonium to be carried out in the aqueous raffinate (although the uranium-MBP complex, in fine, possibly colloidal, precipitate form, may tend to collect at the interface and thence to be carried to the next column). The complex formed with DBP, on the other hand, is strongly organic favoring and will leave the column battery in the organic raffinate stream. The uranium and plutonium complexed in this manner and leaving the columns in the raffinate streams is referred to as "inextractable" or "unstrippable". Although these terms are inexact, the degree of extraction or stripping of these complexes is very small because of their unfavorable distribution ratios.

The solvent-washing procedure described in Chapter IX is expected to remove all of the MBP and DBP from the solvent before it is used in the column batteries. The minor amounts formed in the columns by hydrolysis of the TBP are not expected to affect the uranium and plutonium losses appreciably.

2. "Crud" Formation

Interface "crud" is the informal name given to the brownish-black solids which tend to collect at the liquid-liquid interface in the solvent-extraction

columns after prolonged column operation. The exact nature of this material is not known, but it is believed that the solids are either impurities brought in by the feed or that they are formed in the columns by combination of dissolved metallic impurities with solvent decomposition products to form insoluble compounds. Representative samples of the crud have shown it to contain Fe, Al, and Si in varying proportions with lesser amounts of such elements as Ca, Ba, Mn, Mg, Cr, and Ni present.

Samples of crud removed from "hot" columns have shown considerable gamma activity from adsorbed or combined fission products. A typical breakdown of a crud sample from the Redox-Plant 2D Column attributed 10 per cent of the gamma activity to Ru, 30 per cent to Zr, and 60% to Nb.(21n) Entrainment of this crud in the product streams (which may occur rather easily since its apparent density is between that of the aqueous and organic phases) would have the effect of reducing the decontamination factor obtained in the column.

Because of the possibility of fission-product carry-over by crud entrainment and the emulsion-stabilizing characteristics of crud components, provisions have been made to remove the crud from the column and to minimize the chances of its formation. Interface jet-out facilities are provided on all but the 2A, 2B and O-type columns to permit periodic cleanup of the interface. Solids are removed from the feed and extractant streams by centrifugation, while solids larger than 0.04 in. in diameter are removed from "cold" streams by screens. Solvent decomposition products are removed by the solvent treatment procedure described in Chapter IX.

3. Emulsions

Effective extraction performance of a pulse column is dependent on the formation of a more or less fine phase dispersion, to provide a large interphase contact area. It is an additional requirement, however, that the dispersion formed in the column should be capable of disengaging fairly readily. Emulsions which do not disengage sufficiently readily may be responsible for various undesirable effects. These effects and possible causes leading to them are discussed in the present subsection.

3.1 Emulsification, interface foam, and entrainment

Occasionally, because of the nature of the chemical flowsheet conditions, excessive pulsing conditions, or the presence of emulsion-stabilizing impurities, the net rate of emulsion formation in the column or a portion of the column is greater than the rate of dissipation of the emulsion. If the accumulation of emulsion continues until an appreciable amount of the discontinuous phase is entrained in the continuous phase effluent, the column is said to be emulsified or flooding by emulsification.

Interface foam is produced when the dispersed phase fails to coalesce when it reaches the interface. The foam (or partially stabilized emulsion) may build up to a stable height, or it may propagate throughout the plate or packed section, eventually producing flooding by emulsification. Two types of interfacial foam have been observed: a simple type in which droplets of one phase are dispersed in the other phase, and a more complex type in which

thin, filmy "balloons" of one phase are both filled and surrounded by the other phase. The latter type of emulsion is believed to give the foamy appearance to the top layer of the normal slight interface foam in the aqueous-continuous columns. Excessive interface foam may be produced by the effect of emulsion-stabilizing impurities which tend to collect at the interface (as discussed under H2, above).

A special type of "emulsion", which may build up under an interface, is one reminiscent in appearance of shad roe. It is an organic-in-aqueous dispersion, consisting of approximately 1/8-in.-diameter organic-phase droplets so tightly packed that they occupy about two-thirds of the emulsion volume. Such a shad-roe-like emulsion often builds under interfaces to a depth of about an inch or less, and is innocuous. However, with a (top) interface subjected to an excessive pulse and maintained too close to the top of the plate section, as when an A-type column interface is maintained in the 32-in.-diameter column bore rather than in the enlarged disengaging section above it, the shad-roe emulsion may penetrate to the plate section, eventually filling it and causing flooding. This difficulty can normally be avoided either by allowing an increased interface area or by increasing the distance between the interface and the plate section.

Entrainment refers to a normally very small fraction (typically 0.01 to 0.1%) of the other phase which is carried out with an effluent stream. It usually consists of very fine droplets, some of which may be colloidal in size, which have little tendency to settle out in the disengaging sections. Entrainment of the discontinuous phase with the continuous effluent may easily be explained; it occurs when small droplets of the discontinuous phase are formed in the contacting section of the column which do not have a sufficiently high density-difference driving force to resist the flow of the continuous phase. Entrainment of the continuous phase in the discontinuous-phase effluent is somewhat more difficult to understand. It may occur when the drops of discontinuous phase, enclosed in a film of the continuous phase, coalesce at the interface or after having passed through the interface. The film collapses to form very small droplets of the continuous phase which have an insufficient driving force to settle out of the discontinuous phase in the limited holdup time available in the disengaging section. Again, the presence of an emulsifying agent in the column may be expected to increase the amount of entrainment. Abnormally high entrainment is not desirable for two reasons:

(a) Entrainment of the organic phase in the aqueous effluents represents a potentially economically important loss of solvent, and adds an additional amount of TBP to be steam stripped by the product and waste (acid) concentrators.
(b) Entrainment of the aqueous phase in the organic product streams may, in some instances, permit the carry-over of fission products. (The concentration of fission products in the aqueous entrainment may be 100 or more times that in the organic phase, because of the low fission-product organic/aqueous distribution ratio.)

3.2 Emulsifying impurities

The presence of any emulsifying impurities in the pulse columns may tend to intensify any or all of the undesirable effects discussed under 3.1, above. Potential emulsifying agents include the decomposition products of TBP, particularly DBP, introduced in the solvent and colloidal alumina or siliceous material introduced in the feed or as an impurity in "cold" chemical solutions. Other colloidal or gelatinous compounds, containing such metallic elements as Al, Fe, Sn, Ca, Ba, Mn, Mg, Cr, fission products, etc., have been identified either as potential emulsifying agents or as constituents of emulsion-stabilizing interface "crud". These compounds may be formed in the column by combination of the metallic ions with the acidic decomposition products of TBP or with unsaturated hydrocarbon impurities in the TBP diluent. The metallic ions introduced to the system may come from the uranium slugs, concentrator corrosion, or "cold" chemical impurities.

Primary reliance on elimination of emulsifying impurities in the Purex Plant rests on the solvent treatment and feed centrifugation procedures outlined in Chapters IX and III, respectively, and on the purity specifications for the chemicals procured.(24)

3.3 Effects of emulsifying agents on column performance

The effects of emulsifying agents on column performance have been sketched briefly in Subsections H3.1 and 3.2. These effects may be summarized as follows:

(a) Emulsification: may result in decreased capacity, reduced frequency limits for good performance, and impaired extraction.
(b) Entrainment: may cause increased solvent losses and fission-product carry-over in the organic product streams.
(c) Interface foam: may interfere with interface control; may result in increased entrainment; may result in flooding if interface emulsion is allowed to grow into plate or packed section.
(d) Interface "crud": may result in increased fission-product carry-over on entrained "crud".

3.4 Emulsion-induced instability

Excessive emulsification, which would result in unstable operation or flooding, may normally be prevented, without impairment of H.T.U. values, by the proper selection of pulsing conditions and superficial volume velocities for the chemical system and column design involved. However, under some unusual conditions, not normally encountered in the Purex Plant, special problems in this connection may arise as a result of great differences in the ease of phase dispersion in different portions of the column. In such cases the most easily dispersed portion of the column system may be susceptible to emulsion-induced instability at the pulsing conditions required to produce reasonably good performance in less easily dispersed portions.

Emulsion-induced instability effects sometimes do not arise immediately

upon establishment of operating conditions susceptible to their occurrence. At borderline conditions the column may operate stably for hours, until such agencies as emulsifying impurities, abrupt interface control, or flow-rate fluctuations catalyze the development instability. The instability usually takes the form of large globs (approximately 1 to 2 in. in diameter) of coalesced dispersed phase channeling through the tightly "packed" emulsion in the unstable section. In extreme cases cyclic local phase inversion or even complete flooding may result. In any case, the column extraction effectiveness is likely to be more or less impaired as a result of dispersed-phase coalescence and channeling.

Important emulsion-induced phenomena do not normally arise under Purex Chemical Flowsheet HW #3 conditions, although the IB Scrub and 2A Columns have, in "cold" pilot-plant studies, exhibited a slight susceptibility to delayed emulsion-induced instability effects at normally stable operating conditions near the flooding thresholds.

The factors causing variations in the ease of phase dispersion and in the tendency to flood in various portions of the column are only partly understood. Besides the effects of the physical properties of the liquids, as discussed in Section C, it is believed that even when the physical properties of the liquid-liquid system remain fairly constant throughout the column the dispersed phase may under some conditions tend to disperse more and more finely as it progresses through the column. The effect of mass transfer on the ease of phase dispersion is also sometimes a contributing factor. It is known that under some conditions a liquid-liquid dispersion is created more readily when no significant mass transfer takes place between the phases than when gross mass transfer is involved. Thus in the A-type column extraction sections the ease of phase dispersion (and, hence, the fineness of the dispersion at any given pulse conditions) is greatest in the middle third of the plate section, where no gross mass transfer takes place. The contents of the top third of the plate section, where high concentrations of uranium undergo interphase transfer, and of the bottom third, in which substantial nitric acid extraction takes place, are more difficult to disperse finely.

4. Pulse Transmission

The effectiveness of the pulse in creating the desired phase dispersion is dependent upon a reasonably undistorted transmission of the pulsing movement from the pulse generator to the liquid contents of the column. Distortion of the pressure wave produced by the pulser could occur in a number of ways as indicated below. The distortion may reduce the effective pulse amplitude in the column, impairing the column's extraction effectiveness. It may increase the amplitude so that the column will tend to flood by emulsification at throughputs and frequencies lower than those of the normal flooding thresholds. Or, it may alter the normal approximately sinusoidal displacement-vs.-time characteristic of the pulse. The effects of such possible "wave-shape" alteration have not been systematically studied.

Air trapped in the pulse transmission pipeline may cause serious pulse distortion. In limited pilot-plant studies, pulse amplitude gains of up to 50% and amplitude losses of up to 80% have been caused by trapped air, small

trapped-air volumes and low frequencies tending to cause amplitude gains and larger air volumes and higher frequencies tending to cause amplitude losses.[21t] To prevent the accumulation of air, the Purex-Plant pulse transmission lines (described in Chapter XII) are designed without any intermediate high points at which air might be trapped. Any air that might find its way to the pulser piston located at the top of the transmission line normally escapes through the clearance around the piston rings and through a special (3/32-in.-diameter) "bleed" hole through the piston.

Flexing or "breathing" of the column's bottom disengaging section with the pulse may cause effects similar to those produced by an air block. Cylindrical bottom end sections are used on all Purex columns but the IBS, 2A, and 2B Columns to impart rigidity. The small-diameter column bottom end sections are rigidly braced by 3/4-in. cross rods located about 7 in. apart on the flat surface of the "beaver tails" to minimize "breathing".

Pulse loss or distortion could also occur through the influent and effluent lines at the bottom of the column. This loss is negligible in the Purex Plant because of the small relative cross sections of these lines and the resistance to flow offered by the liquid head or by the pumps, valves, etc. in the lines.

Wave-shape distortion may occur as a result of worn parts in the pulse generator. Or excessive friction in the pulse generator may cause "kicks" in the pulse.

NOMENCLATURE

a	= Pulse amplitude, in.
A	= Volume flow of aqueous phase per unit time.
D	= Column diameter, in.
D.F.	= Arithmetic decontamination factor ($dF = \log_{10}$ D.F.).
$D.F._o$	= Overall D.F.
E_a^o	= Distribution ratio, g./l. solute in organic phase divided by g./l. solute in aqueous phase.
f	= Pulse frequency, cycles/min.
h	= Distance on the abscissa between ordinates (y values) used in Simpson's Rule method of graphical integration.
H.E.T.S.	= Height equivalent to a theoretical stage.
H.T.U.	= Height of a transfer unit.
$H.T.U._E$	= Individual extractant-film H.T.U.

$H.T.U._{OR}$ = Over-all raffinate-film basis for H.T.U. calculation.

$H.T.U._{R}$ = Individual raffinate-film H.T.U.

m = Slope of equilibrium line = dY^*/dX

M = X_1/X_2 for extraction and Y_1/Y_2 for stripping. If the extractant contains solute, the values of M become $(X_1 - Y_x/m) / (X_2 - Y_x/m)$ and $(Y_1 - X_x m) / (Y_2 - X_x m)$ for extraction and stripping, respectively.

M = Molarity, gram-mols/liter.

N_s = Number of theoretical stages.

N_t = Number of transfer units.

O = Volume flow rate of organic phase per unit time.

P = Extraction factor: the slope of the operating line divided by the slope of the equilibrium line for extraction (A/mO) and the reciprocal (mO/A) for stripping.

X = Solute concentration in aqueous phase.

X^* = Solute concentration in aqueous phase in equilibrium with organic phase with composition denoted by Y.

X' = HNO_3 concentration in aqueous phase.

y = Ordinate values used in Simpson's Rule for graphical integration.

Y = Solute concentration in organic phase.

Y^* = Solute concentration in organic phase in equilibrium with aqueous phase with composition denoted by X.

Y' = HNO_3 concentration in organic phase.

Z = Plate or packed-section height, ft.

Subscripts:

For A,O,X, and Y:

1,2 = Concentrated and dilute-end values, respectively.

f = Feed stream.

fs = Combined feed and scrub streams.

is = Intermediate scrub stream (dual-scrub columns).

[redacted]

p = Plutonium-bearing product stream.

s = Scrub stream.

u = Plutonium-free uranium product stream.

w = Waste stream.

x = Extractant stream.

For D.F., E_a^o, and M:

B = Bottom scrub section (dual-scrub columns).

F = Feed plate.

S = Scrub section.

T = Top scrub section (dual-scrub columns).

Suffixes for Stream Nomenclature:

F = Feed stream.

IS = Intermediate scrub stream.

P = Plutonium-bearing product stream.

S = Scrub stream.

U = Plutonium-free uranium product stream.

W = Waste stream.

X = Extractant stream.

REFERENCES

(1) A. P. Colburn, "Simplified Calculation of Diffusional Processes", Ind. Eng. Chem. 33, 459-467 (1941).

(2) B. V. Coplan, J. K. Davidson, and E. L. Zebroski, "The 'Pump-Mix' Mixer Settler -- A New Liquid-Liquid Extractor", Chem. Eng. Prog., 50, 403-408 (1954).

(3) J. H. Perry, Chemical Engineers' Handbook, 3rd Edition, McGraw-Hill Book Co., N.Y. (1950) Pp. 742-746.

(4) G. Sege and F. W. Woodfield, "Pulse Column Variables", Chem. Eng. Prog., 50, 396-402 (1954).

(5) W. J. D. Van Dijck, U. S. Patent 2,011,186, Aug. 13, 1935.

(6) Argonne National Laboratory Quarterly Summary Reports for the Chemical Engineering Division. S. Lawroski and C. E. Stevenson. Document numbers and quarters as follows:

(a)	ANL-4820	Jan., Feb., March, 1952
(b)	ANL-4872	April, May, June, 1952
(c)	ANL-4922	July, Aug., Sept., 1952
(d)	ANL-4979	Oct., Nov., Dec., 1952
(e)	ANL-5103	April, May, June, 1953
(f)	ANL-5169	July, Aug., Sept., 1953

(7) CF-51-5-90 Run IHP-4 Summary. T. H. Spencer. O.R.N.L. 5-14-51.

(8) CF-52-3-245 Pilot Plant Run HCP-1 Summary. J. M. Chandler, J. L. Matherne, and E. J. Weber. O.R.N.L. 3-25-52.

(9) CF-52-5-43 Pilot Plant Run HCP-2 Summary. J. M. Chandler, J. L. Matherne, and E. J. Weber. O.R.N.L. 5-5-52.

(10) CF-52-7-154 Pilot Plant Run HCP-7 Summary. J. M. Chandler and A. J. Pecquet. O.R.N.L. 7-21-52.

(11) CF-52-8-81 Pilot Plant Run HCP-8 Summary. J. E. Bigelow, J. M. Chandler, and A. J. Pecquet. O.R.N.L. 8-12-52.

(12) CF-52-9-166 Pilot Plant Run HCP-10 Summary. J. M. Chandler and A. J. Pecquet. O.R.N.L. 9-17-52.

(13) CF-52-11-221 Pilot Plant Run HCP-12 Summary. J. M. Chandler and A. J. Pecquet. O.R.N.L. 11-25-52.

(14) CF-53-2-154 Pilot Plant Run HCP-16 Summary. J M. Chandler and A. J. Pecquet. O.R.N.L. 2-17-53.

(15) CF-53-3-51 Pilot Plant Run HCP-17 Summary. J. M. Chandler and A. J. Pecquet. O.R.N.L. 3-6-53.

(16) CF-53-3-170 Pilot Plant Run HCP-18 Summary. J. M. Chandler and K. H. McCorkle. O.R.N.L. 3-20-53.

(17) CF-53-4-49 Pilot Plant Run HCP-19 Summary. J. M. Chandler and K. H. McCorkel. O.R.N.L. 4-8-53.

(18) CF-53-5-44 Pilot Plant Run HCP-20 Summary. J. M. Chandler and K. H. McCorkle. O.R.N.L. 5-7-53.

(19) FLS-717 Run IHP-5 Summary. J. W. Ullmann. O.R.N.L. 5-29-51.

(20) FLS-739 Run IHP-6 Summary. H. L. Hull. O.R.N.L. 6-13-51.

(21) H.A.P.O. Monthly Progress Reports for the Chemical Development Sub-Section. F. W. Woodfield. Document numbers and months as follows:

(a)	HW-24641	May, 1952
(b)	HW-24901	June, 1952
(c)	HW-26472	November, 1952
(d)	HW-26769	December, 1952
(e)	HW-26892	January, 1953
(f)	HW-27298	February, 1953
(g)	HW-27513	March, 1953
(h)	HW-27970	April, 1953
(i)	HW-28270	May, 1953
(j)	HW-28616	June, 1953
(k)	HW-28927	July, 1953
(l)	HW-29226	August, 1953
(m)	HW-29534	September, 1953
(n)	HW-29850	October, 1953
(o)	HW-30108	November, 1953
(p)	HW-30153	December, 1953
(q)	HW-30742	January, 1954
(r)	HW-31030	February, 1954
(s)	HW-31350	March, 1954
(t)	HW-31757	April, 1954
(u)	HW-32663	July, 1954
(v)	HW-33297	September, 1954
(w)	HW-33650	October, 1954
(x)	HW-33969	November, 1954
(y)	HW-34332	December, 1954

(22) HW-19023 Scouting Studies in a 5.05-Inch-Diameter Redox Pulse Column. W. S. Figg and J. G. Bradley. 1-15-51.

(23) HW-19140 Uranium Recovery Technical Manual. Author not stated. 1-10-51.

(24) HW-19156 Specifications, Acceptance and Sampling Procedures for Essential Materials. E. W. Rebol. May, 1951.

(25) HW-31373 Purex Chemical Flowsheet HW #3. R. E. Smith. 4-6-54.

(26) HW-33953 Limiting Flow Capacity in Solvent Extraction Pulse Columns; Part I: The Effect of Pulse and Cartridge Variables. W. H. Swift. 11-30-54.

(27) HW-34861 Limiting Flow Capacity in Solvent Extraction Pulse Columns; Part II: The Effect of Physical Properties and Final Correlation. J. F. Calkin and W. H. Swift.

(28) KAPL-523 Separations Processes Progress Report for February, March, and April, 1951, Vol. I. K.A.P.L. Staff.

(29) KAPL-584 Separations Processes Progress Report for May, June, and July, 1951, Vol. I. K.A.P.L. Staff.

(30) KAPL-631 Separations Processes Progress Report for August, September, and October, 1951. K.A.P.L. Staff.

(31) Knolls Atomic Power Laboratory Periodical Pilot Plant Progress Reports. K.A.P.L. Staff. Document numbers and report periods as follows:

(a)	KAPL-708	Nov., Dec., 1951, Jan., 1952
(b)	KAPL-738	Feb., March, April, 1952
(c)	KAPL-785	May, June, July, 1952
(d)	KAPL-809	Aug., Sept., Oct., 1952
(e)	KAPL-860	Nov., Dec., 1952, Jan., 1953
(f)	KAPL-913	Feb. through June, 1953

(32) NYO-1177 Integrated Process Design Report on Feed Materials Production Center, Fernald, Ohio. Author not stated. 8-20-52.

(33) ORNL-1519 Terminal Report for the ORNL Pilot Plant Investigation of the Purex Process. D. O. Darby and J. M. Chandler. 2-5-54.

(34) TID-2012 J. R. Flanary, "The Purex Process at Oak Ridge National Laboratory", Reactor Science and Technology, 4, 9-36, March, 1954.

(35) Ibid. E. L. Zebroski and W. O. Haas, Jr., "The Purex Process at Knolls Atomic Power Laboratory", Pp. 37-63.

LIST OF TABLES AND FIGURES

TABLE V-1	DECONTAMINATION FACTORS IN PUREX PILOT-PLANT PULSE COLUMNS
TABLE V-2	DECONTAMINATION IN PILOT-PLANT MIXER-SETTLERS
TABLE V-3	DECONTAMINATION IN PILOT-PLANT PULSE COLUMNS -- Effect of Pulse Amplitude-Frequency Product
TABLE V-4	DECONTAMINATION IN PILOT-PLANT PULSE COLUMNS -- Effect of Uranium Solvent Saturation in the IA Column Scrub Section
TABLE V-5	DECONTAMINATION IN PILOT-PLANT MIXER SETTLERS -- Effect of Acid Concentration in the First-Cycle Flowsheet
TABLE V-6	DECONTAMINATION IN PILOT-PLANT PULSE COLUMNS -- Effect of Throughput Rate
FIGURE V-1	EXAMPLE URANIUM MASS-TRANSFER CALCULATION -- HA Column Uranium Operating Diagram
FIGURE V-2	HA COLUMN PLUTONIUM AND NITRIC ACID OPERATING DIAGRAMS
FIGURE V-3	EXAMPLE URANIUM MASS-TRANSFER CALCULATION -- HC Column Uranium Operating Diagram
FIGURE V-4	HC COLUMN PLUTONIUM AND NITRIC ACID OPERATING DIAGRAMS
FIGURE V-5	IA COLUMN OPERATING DIAGRAMS
FIGURE V-6	IBX COLUMN OPERATING DIAGRAMS
FIGURE V-7	IBS COLUMN OPERATING DIAGRAMS
FIGURE V-8	IC COLUMN OPERATING DIAGRAMS
FIGURE V-9	2A COLUMN OPERATING DIAGRAMS
FIGURE V-10	2B COLUMN OPERATING DIAGRAMS
FIGURE V-11	2A - 2B COLUMN (REFLUX FLOWSHEET) OPERATING DIAGRAMS
FIGURE V-12	MINIMUM THEORETICAL EXTRACTANT FLOW REQUIREMENTS -- A-Type Column
FIGURE V-13	MINIMUM THEORETICAL EXTRACTANT FLOW REQUIREMENTS -- C-Type Column
FIGURE V-14	THREE TYPES OF PHASE DISPERSION

FIGURE V-15 A-TYPE COLUMN EXTRACTION-SECTION PERFORMANCE

FIGURE V-16 EFFECT OF EXTRACTANT FLOW RATE ON A-TYPE COLUMN EXTRACTION EFFECTIVENESS

FIGURE V-17 FLOODING CHARACTERISTICS OF THE A-TYPE COLUMN SCRUB SECTION

FIGURE V-18 C-TYPE COLUMN PERFORMANCE

FIGURE V-19 FLOODING CHARACTERISTICS OF THE IB EXTRACTION COLUMN

FIGURE V-20 IB SCRUB COLUMN PERFORMANCE

FIGURE V-21 EFFECT OF IBS/IBSF FLOW RATIO ON IB SCRUB COLUMN PERFORMANCE

FIGURE V-22 2A COLUMN EXTRACTION SECTION PERFORMANCE

FIGURE V-23 FLOODING CHARACTERISTICS OF THE 2B COLUMN

FIGURE V-24 FLOODING CHARACTERISTICS OF THE O-TYPE COLUMN

FIGURE V-25 C-TYPE COLUMN PERFORMANCE WITH NOZZLE PLATES

FIGURE V-26 EFFECT OF EXTRACTANT FLOW RATE ON C-TYPE COLUMN EXTRACTION EFFECTIVENESS -- Nozzle-Plate Cartridge

FIGURE V-27 FLOODING CHARACTERISTICS OF THE O-TYPE COLUMNS WITH NOZZLE-PLATE CARTRIDGE

TABLE V-1

DECONTAMINATION FACTORS IN PUREX
PILOT-PLANT PULSE COLUMNS

Based on Data of ORNL-1519

Arithmetic Decontamination Factors

	First Extraction Cycle – Average of 14 Runs			Second Plutonium Cycle – Average of 11 Runs		Second Uranium Cycle – Average of 7 Runs		Two-Cycle D.F.	
	1A Column (1AP Stream)	Plutonium (1BP Stream)	Uranium (1CU Stream)	2A Column (2AP Stream)	2B Column (2BP Stream)	2D Column (2DU Stream)	2E Column (2EU Stream)	Plutonium Average of 11 Runs	Uranium Average of 7 Runs
Gross Beta	2.9×10^3	6.2×10^3	2.5×10^4	5.0×10^2	3.0	52	1.1	1.3×10^7(h)	4.1×10^6(i)
Gross Gamma	3.9×10^2	1.8×10^3	6.0×10^3	6.6×10^2	7.5	77	3.8	3.5×10^6(h)	1.5×10^6(i)
Ru Beta	5.4×10^2	1.0×10^3	1.7×10^3	3.2×10^2	4.1	138	2.4	1.7×10^6	4.6×10^5
Zr Beta	8.2×10^2(a)	1.2×10^3	2.8×10^4	4.9×10^2(f)	1.6(f)	83	1.7	3.9×10^6	2.8×10^6
Nb Beta	7.7×10^2	3.0×10^3	5.9×10^3	1.0×10^2(f)	6.7(f)	144	2.9	3.9×10^6	1.4×10^6
TRE Beta	6.7×10^4(b)	4.8×10^4(c)	1.1×10^7(d)	9.8×10^3(g)				4.2×10^8	5.3×10^7
UX_1 and UX_2								2.3×10^4	
I Beta								2.3×10^4(g)	7.5×10^2(j)
Pu			8.7×10^2(e)						5.6×10^3(e)(k)

Pulse Column Descriptions

	1A Column Extraction	1A Column Scrub	1B Column Extraction	1B Column Scrub	1C Column	2A Column Extraction	2A Column Scrub	2B Column	2D Column Extraction	2D Column Scrub	2E Column
Diameter, In. (Pipe Size)	2	2	2	2	4	0.75	0.75	0.75	2	2	4
Contacting Height, Ft.	12	18	18	8	12	16	8	10	8	13	15
Throughput, Gal./(Hr.)(Sq.Ft.)(1)	540	470	545	150	320	650	175	165	535	460	250
Pulse Amplitude, In.	0.94		0.94(m)		1.00	0.50		0.50	1.1(o)		1.0
Pulse Frequency, Cycles/Min.	58		74(n)		60	50		30	58		60
Sieve Plates (Stainless Steel)	2-in. spacing — 0.125-in. dia. holes — 23% free area					1-in. spacing — 0.06 in. dia. holes — 23% free area			2-in. spacing — 0.125 in. dia. holes — 23% free area		

1. Solvent-extraction flowsheet:

Stream	Composition	Relative Volume
First Extraction Cycle:		
1AF	1.35 M $UO_2(NO_3)_2$, 2.0 M HNO_3, 0.02 M $NaNO_2$(p)	100
1AS	3.0 M HNO_3	67
1AX	30% Tributyl Phosphate in Amsco 123-15	333
1BS	30% Tributyl Phosphate in Amsco 123-15	89
1BX	0.1 M HNO_3, 0.03 M $Fe(NH_2SO_3)_2$	45
1CX	Demineralized Water	666
Second Plutonium Cycle:		
2AF	6.0 M HNO_3, 0.02 M Fe^{+++}, 0.1 M NO_2^-	67
2AX	30% Tributyl Phosphate in Amsco 123-15	16.4
2AS	0.5 M HNO_3	8.2
2BS	0.05 M HNO_3, 0.05 M $NH_2OH.1/2H_2SO_4$	4.1
Second Uranium Cycle:		
2DF	1.39 M $UO_2(NO_3)_2$, 2.0 M HNO_3, 0.05 M NO_2^-	97
2DX	30% Tributyl Phosphate in Amsco 123-15	333
2DS	3.0 M HNO_3, 0.02 M $Fe(NH_2SO_3)_2$	67
2EX	Demineralized Water	516

2. Processing rate was 75 kg. U/day (instantaneous).

3. Slug irradiation levels varied from 346 to 718 MWD/T. (See under F5.36, in text.)

4. Slug cooling times varied from 63 to 342 days. (See under F5.36 in text.)

5. Conventional HNO_3 dissolution of slugs was used except that a down-draft dissolver condenser was used without addition of air to the system.

6. No head-end treatment of dissolver solution was used.

7. First-cycle feed adjustments for runs selected for tabulation were made both with and without nitrite treatment ($HaNO_2$ or NO_2 gas). (See under F5.36, in text.)

8. For runs tabulated, both second-cycle feeds were treated with $NaNO_2$ or NO_2 gas.

9. Solvent-extraction battery was operated continuously with continuous recycling of recovered solvent and HNO_3.

10. Solvent treatment for runs tabulated did not include centrifugation. (See under F5.36, in text.)

11. The aqueous phase was continuous for all runs tabulated.

NOTES:

(a) Average of 11 runs only.
(b) Average of 7 runs only.
(c) Average of 13 runs only.
(d) Average of 9 runs only.
(e) Calculated from O.R.N.L. individual run report data.
(f) Average of 8 runs only.
(g) Average of 4 runs only.
(h) Corrected for Pu activity.
(i) Corrected for UX_1 and UX_2 and U^{237}.
(j) Average of 2 runs only.
(k) Average of 3 runs only.
(l) Sum of both phases averaged to nearest 5 gal./(hr.)(sq.ft.) for runs selected for tabulation.
(m) Normal value valid for 8 runs only.
(n) Normal value valid for 10 runs only.
(o) Normal value valid for 6 runs only.
(p) See Item 7 under Run Conditions.

HW-31000

TABLE V-2

DECONTAMINATION IN PILOT-PLANT MIXER-SETTLERS

K.A.P.L. and A.N.L. Findings

	AVERAGE ARITHMETIC D.F.'s			
	K.A.P.L.[a]		A.N.L.	
	Pu	U	Pu	U
First Extn. Cycle:				
Gross beta	6.6×10^4	2.3×10^5	6.6×10^4	2.0×10^5
Gross gamma	3.7×10^3	2.2×10^4	1.9×10^4	3.8×10^4
Two Cycle:				
Gross beta	5.1×10^7	4.0×10^7	2.0×10^7	6.6×10^6
Gross gamma	1.0×10^7	1.8×10^6	4.0×10^7	2.8×10^6

FLOWSHEET AND EQUIPMENT DATA

	K.A.P.L.			A.N.L.		
	Flowsheet[b]	No. of Runs	No. of Stages	Flowsheet[b]	No. of Runs	No. of Stages
First Extn. Cycle	ORNL-846 Rev.	8		AH-1	6	
IA extn.			12			8
scrub			8			11
IB extn.			10			10
scrub			10			9
IC			10			14
Second Pu Cycle	KAPL #6	3		KAPL #2	5	
2A extn.			10			6
scrub			10			8
2B			10			14
Second U Cycle	ORNL-846	9		ANL	3	
2D extn.			(c)			6
scrub			(c)			8
2E			(d)			14
Diluent	Gulf-BT, Amsco-123, or Ultrasene			CCl_4		
Slug History	38 to 530 g.Pu/ton U-- 85 to 186 day "cooling"			17 to 420 g.Pu/ton U-- 90 to 150 day "cooling"		

Notes: (a) Head-end treatment was used for all K.A.P.L. runs selected for use in this tabulation, but D.F.'s shown are for solvent extraction only.

(b) The designated flowsheets are essentially the same as the O.R.N.L. flowsheet shown by Table V-1 except for deviations in diluent (see above) and the additional deviations tabulated below:

	K.A.P.L.			A.N.L.		
Cycle	Flowsheet	Stream	Deviation	Flowsheet	Stream	Deviation
First Extn.	ORNL-846 (Rev.)	IAF	1.25 M UNH	AH-1	IAF	1.4 M UNH
		IBX	Rel. Flow: Twice ORNL		IBX	Rel. Flow: Twice ORNL
Second Pu	KAPL #6	2AF	3.65 M HNO_3	KAPL #2	2AF	4.0 M HNO_3
			Rel. Flow: 1/4 ORNL			Rel. Flow: 1/4 ORNL
		2AS	Rel. Flow: 1-1/2 ORNL			
Second U	ORNL-846	2DF	No NO_3^- addition	ANL	2DF	No NO_3^- addition

(c) Three different 2D mixer-settler units were used, for which the number of stages varied (e.g., 5 extraction, 5 scrub stages and 12 extraction, 8 scrub stages). No changes in D.F.'s occurred which could be charged to these equipment changes.

(d) Three different 2E mixer-settler units were used. For 2 units the number of stages was 10; for the third unit the number of stages was not reported. No D.F. variation with equipment was noted.

TABLE V-3

DECONTAMINATION IN PILOT-PLANT PULSE COLUMNS
EFFECT OF PULSE AMPLITUDE-FREQUENCY PRODUCT

O.R.N.L. Findings

Run Number	HCP-17 (a)(b)		HCP-18 (a) (b)	
Part	A	B	A	B
IA Column Pulse Amplitude, In.	0.94	0.74	0.74	0.54
Arithmetic D.F.'s:				
IA Column (IAP Stream):				
Gross beta (c)	2.0×10^3	1.9×10^3	1.1×10^3	1.1×10^3
Gross gamma (d)	13.0×10^2	8.9×10^2	5.5×10^2	6.0×10^2
Ru beta	4.9×10^2	3.7×10^2	3.7×10^2	2.9×10^2
Zr beta	2.6×10^3	1.8×10^3	1.4×10^3	0.9×10^3
Nb beta (d)	4.2×10^3	4.6×10^3	2.0×10^3	5.2×10^3
I beta (c)	1.1	1.3	0.7	---
First Cycle Pu (IBP Stream): (e)				
Gross beta	8.5×10^3	5.6×10^3	6.0×10^3	3.7×10^3
Gross gamma	3.0×10^3	2.3×10^3	2.2×10^3	1.6×10^3
Ru beta	7.8×10^2	4.9×10^2	5.5×10^2	4.6×10^2
Zr beta	3.0×10^3	1.9×10^3	1.6×10^3	0.9×10^3
Nb beta (e)	6.9×10^3	4.6×10^3	4.9×10^3	2.9×10^3
TRE beta	---	---	6.0×10^4	4.0×10^4
I beta	3.3×10^3	2.9×10^3	11.0×10^3	---
First Cycle U (ICU Stream): (f)				
Gross beta	1.1×10^4	1.2×10^4	1.0×10^4	0.95×10^4
Gross gamma	4.9×10^3	4.9×10^3	3.4×10^3	3.7×10^3
Ru beta	11×10^2	9.8×10^2	8.8×10^2	7.8×10^2
Zr beta	2.3×10^4	2.9×10^4	1.4×10^4	1.5×10^4
Nb beta	13×10^3	12×10^3	3.5×10^3	5.4×10^3
I beta	24	31	18	20

Notes:

(a) Run conditions and pulse-column designs are accurately described by Table V-1, except as follows:

(1) The af product was varied by varying the pulse amplitude, as indicated.
(2) Continuous treatment of the solvent included centrifugation (see under F5.36).
(3) The organic phase was continuous in the IC Column (see under F5.36).

(b) For each run, the IAF for both parts was prepared from the same dissolver solution.

(c) The effect of af product variation on the gross beta D.F. for the IA Column may have been masked by the facts that (1) iodine contributed about 75% of the beta activity in the IAP stream and (2) iodine decontamination in the IA Column is negligible.

(d) Apparent erratic behavior of niobium D.F.'s in the IA Column (and gross gamma, to a lesser extent) may have been caused by "plating out" of niobium (chiefly a gamma emitter) on the container walls of solvent phase samples.

(e) The effects of af product variation in the IA Column on IBP data are more evident probably because of a more reliable niobium analysis in the aqueous (IBP) phase compared to the organic (IAP) phase; also, since iodine largely follows the IBU stream, its effect(see (d), above) is mitigated.

(f) The effects of af product variation in the IA Column on the ICU data are probably masked by a normal fluctuation in the F.P. split in the IB Column, an effect that is accentuated in these runs by the fact that the bulk of the niobium and zirconium activities followed the IBP stream. (The F.P. split was influenced by solvent centrifugation. See under F5.36.)

TABLE V-4

DECONTAMINATION IN PILOT-PLANT PULSE COLUMNS
EFFECT OF URANIUM SOLVENT SATURATION IN THE IA COLUMN SCRUB SECTION

O.R.N.L. Findings

IA Column Pulse Amplitude, In.	0.74				0.54	
Run Number, HCP-(a)	17B(b)	18A(b)	19	20A	18B	20B
Processing Rate, Kg./Day of U	75	75	66.4	50	75	50
IA Scrub Volume Velocity(c)	465	465	485	445	465	445
IAP Saturation, %(d)	75	75	60	50	75	50
IA Column Arithmetic D.F.'s:						
Gross beta	1.9×10^3	1.1×10^3	2.0×10^3	0.39×10^3	1.1×10^3	0.11×10^3
Gross gamma	8.9×10^2	5.5×10^2	6.7×10^2	0.96×10^2	6.0×10^2	0.32×10^2
Ru beta	3.7×10^2	3.7×10^2	2.7×10^2	1.2×10^2	2.9×10^2	0.95×10^2
Zr beta	1.8×10^3	1.4×10^3	2.8×10^3	0.05×10^3	0.90×10^3	0.01×10^3
Nb beta	4.6×10^3	2.0×10^3	1.1×10^3	0.30×10^3	5.2×10^3	0.31×10^3

Notes:

(a) Run conditions and pulse-column descriptions are accurately described by Table V-1, except as follows:

(1) For Runs HCP-19 and 20 the IAP uranium solvent saturation (see Note (d)) was reduced below normal by increasing the IAX flow rate and reducing the IAF flow rate. As a result, the volume velocity in the IA Column scrub section and the uranium processing rate varied as shown in this table.
(2) The IA Column pulse amplitude was lower than normal.
(3) Except for HCP-20A and 20B, the organic phase was continuous in the IC Column.
(4) Continuous treatment of the solvent included centrifugation.
(5) Except for Run 17B, ferrous ammonium sulfate - sulfamic acid mixture was used in place of ferrous sulfamate as the Pu reductant in the IB Column.
(6) For Runs HCP-19 and 20, the HNO_3 concentration in the IAF and IAS were approximately 3M and 1.5 M, respectively.

(b) Results of two runs (HCP-17B and 18A) at normal IAP saturation are tabulated in order to indicate normal reproducibility.

(c) Gal./(hr.) (sq. ft.), sum of both phases.

(d) Expressed as per cent saturation of TBP with respect to complexed uranium.

TABLE V-5

DECONTAMINATION IN PILOT-PLANT MIXER SETTLERS
EFFECT OF ACID CONCENTRATION IN THE FIRST-CYCLE FLOWSHEET

K.A.P.L. Findings

Product (stream)	Pu (IBP Stream)		U (ICU Stream)	
Flowsheet	ORNL-846, Rev.[a] (High Acid)	KAPL #5[b] (Low Acid)	ORNL-846, Rev.[a] (High Acid)	KAPL #5[b] (Low Acid)
First-Cycle Arithmetic D.F.'s:				
Gross beta	6.6×10^4	5.9×10^4	2.3×10^5	1.9×10^5
Gross gamma	3.7×10^3	7.7×10^3	2.2×10^4	0.9×10^4
Ru	5.9×10^3	2.0×10^3	2.0×10^3	1.9×10^3
Zr + Nb	1.8×10^3	5.5×10^3	1.5×10^4	0.8×10^4

Notes:

(a) Flowsheet, run conditions, and equipment data are described by Table V-2.

(b) Averages of 15 runs, the conditions and equipment data for which are described by Table V-2. The KAPL #5 flowsheet differs from the ORNL-846, Rev., in the following respects:

(1) The HNO_3 concentration in the IAF is 0.5 M (vice 2.0 M).
(2) The HNO_3 concentration in the IAS is 2.0 M (vice 3.0 M).
(3) The UNH concentration in the IAF is 1.80 M (vice 1.25 M).
(4) The IAF relative flow rate is 66.7 (vice 100).

TABLE V-6

DECONTAMINATION IN PILOT-PLANT PULSE COLUMNS EFFECT OF THROUGHPUT RATE

O.R.N.L. Findings. Data from CF-52-8-81.

Run No.	HCP-8A	HCP-8B	HCP-8C
Conditions:[a]			
Processing Rate, Kg. U/Day	75	37.5	37.5
Superficial Volume Velocities, Gal./(Hr.)(Sq.Ft.), Sum of Both Phases:			
IA Column scrub	470	235	235
IB Column extn.	545	270	270
IB Column scrub	150	75	75
Pulse Amplitudes, In.:			
IA Column	0.94	0.94	1.26
IB Column	0.94	0.94	1.26
Arithmetic D.F.'s:			
IA Column (IAP Stream):			
Gross beta	3.3×10^3	1.8×10^3	3.9×10^3
Gross gamma	5.5×10^2	2.0×10^2	2.8×10^2
Ru beta	8.4×10^2	5.2×10^2	7.5×10^2
Nb beta	14×10^2	4.8×10^2	8.8×10^2
First-Cycle Pu (IBP Stream):			
Gross beta	4.0×10^3	2.4×10^3	6.5×10^3
Gross gamma	1.4×10^3	0.9×10^3	1.7×10^3
Ru beta	1.3×10^3	1.0×10^3	1.6×10^3
Zr beta	0.6×10^3	0.5×10^3	1.1×10^3
Nb beta	0.9×10^3	1.6×10^3	1.5×10^3
First-Cycle U (ICU Stream):			
Gross beta	3.1×10^4	1.9×10^4	3.2×10^4
Gross gamma	9.7×10^3	7.6×10^3	11.0×10^3
Ru beta	2.9×10^3	1.8×10^3	2.9×10^3
Zr beta	1.8×10^4	1.7×10^4	2.4×10^4
Nb beta	9.7×10^3	5.1×10^3	8.8×10^3

Note:

(a) Run conditions and pulse-column designs were as described by Table V-1 except for variations here tabulated. The IAF for all three parts was prepared from the same dissolver solution.

FIGURE V-1

EXAMPLE URANIUM MASS-TRANSFER CALCULATION

H A COLUMN URANIUM OPERATING DIAGRAM

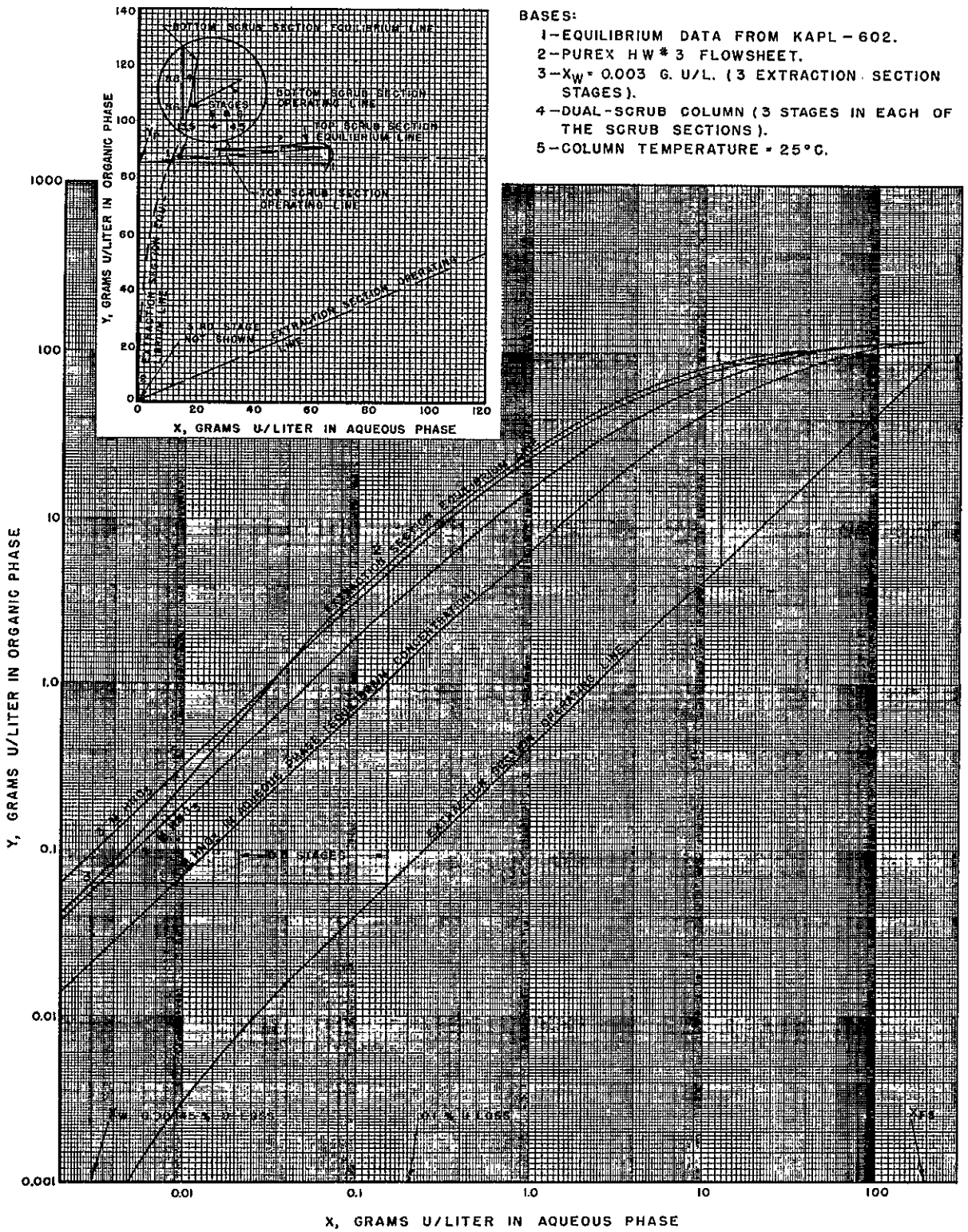

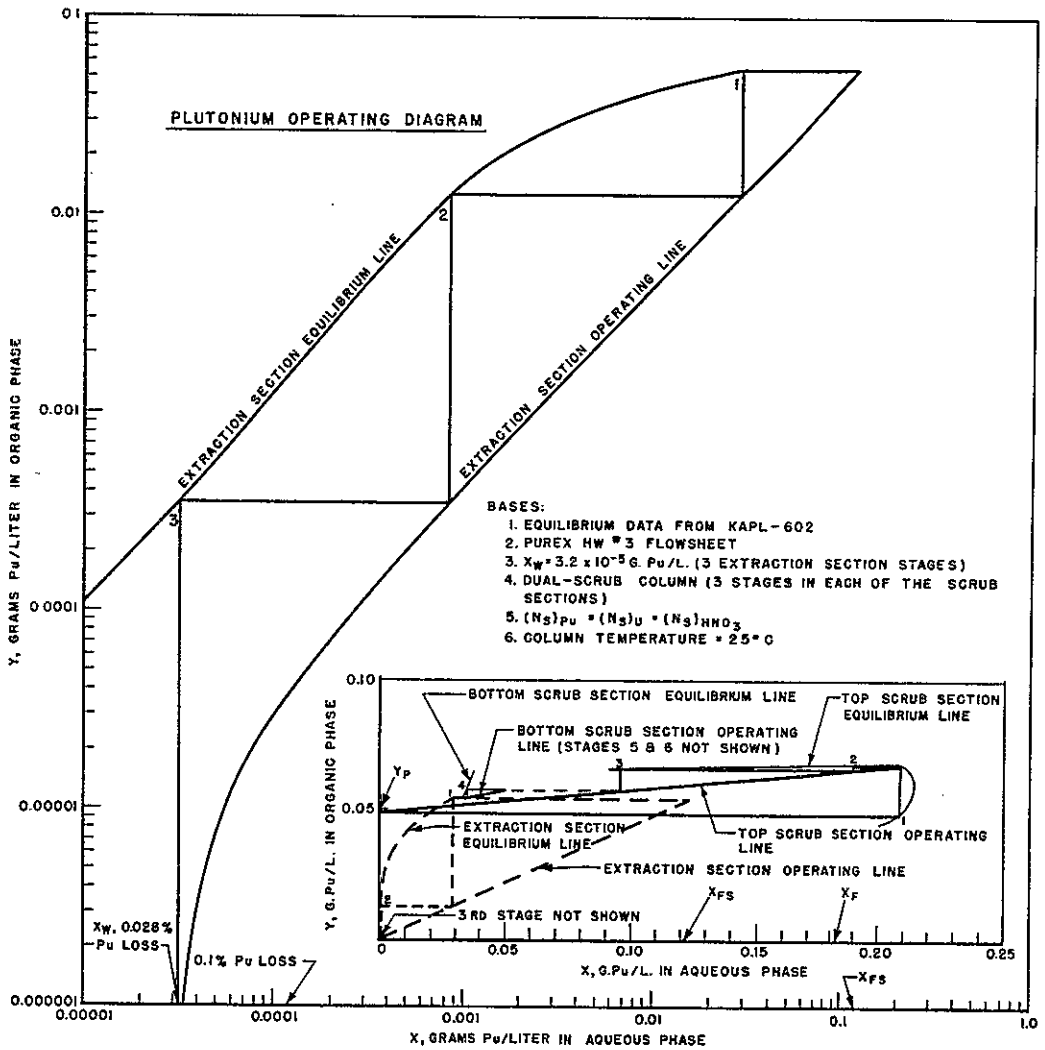

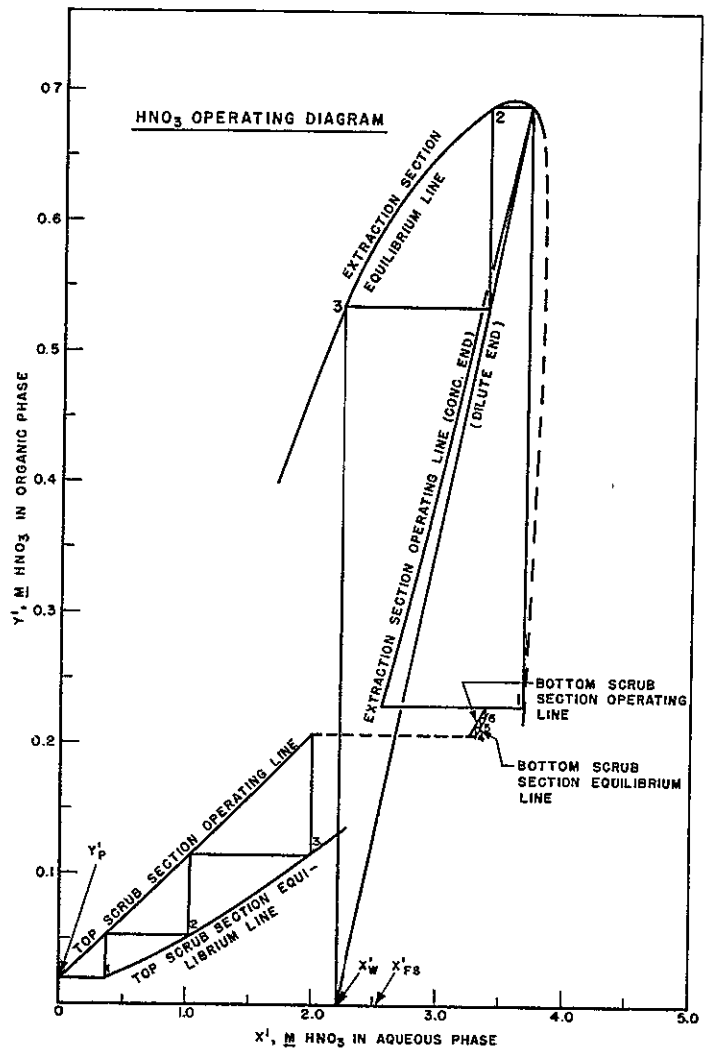

FIGURE V-2

H A COLUMN PLUTONIUM AND NITRIC ACID OPERATING DIAGRAMS

HW-31000

[redacted]

FIGURE V-3

EXAMPLE URANIUM MASS-TRANSFER CALCULATION

H C COLUMN URANIUM OPERATING DIAGRAM

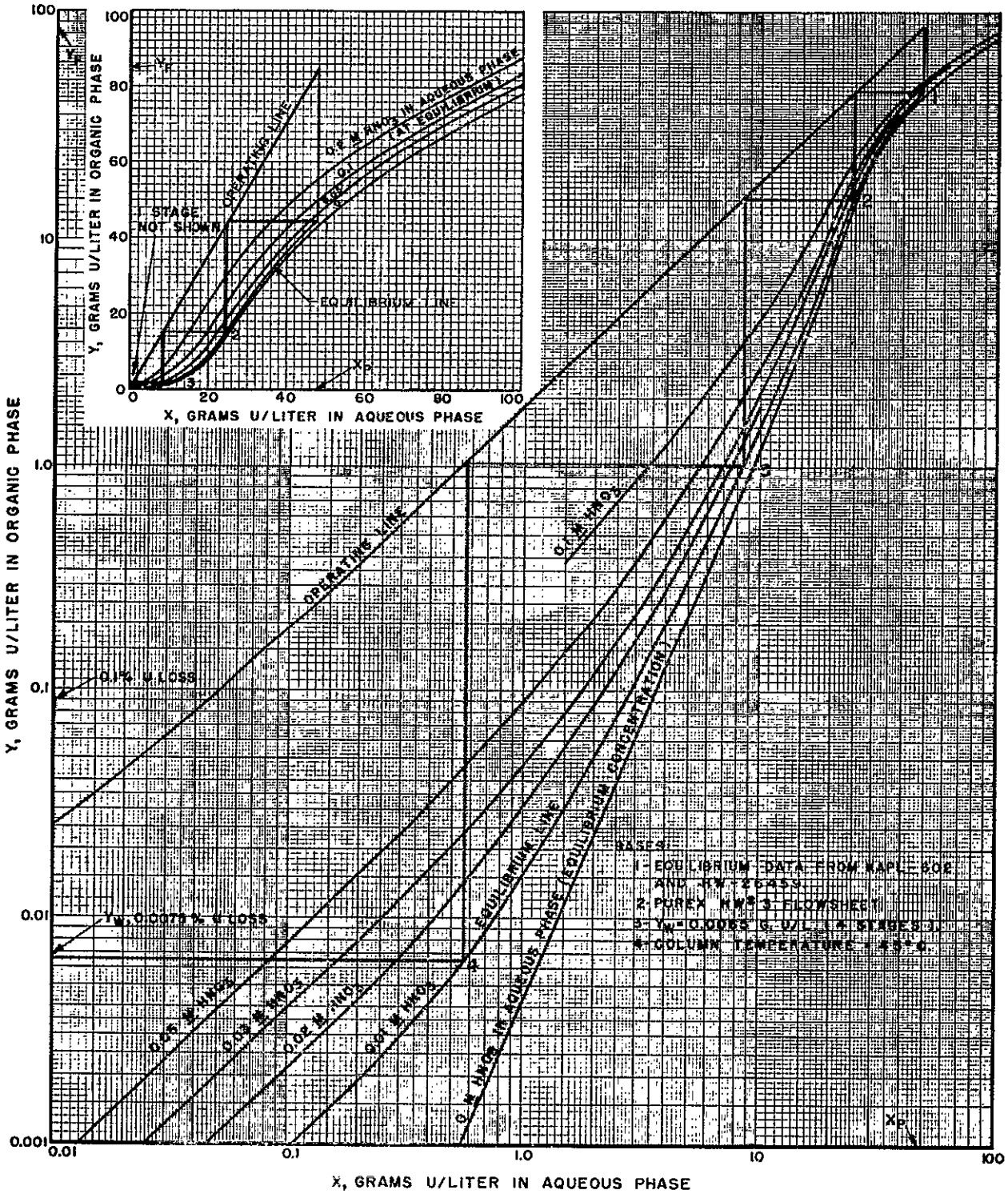

[redacted]

[redacted]

FIGURE V-4

HC COLUMN PLUTONIUM AND NITRIC ACID OPERATING DIAGRAMS

BASES:
1 – EQUILIBRIUM DATA FROM KAPL – 602
2 – PUREX HW # 3 FLOWSHEET
3 – $Y_W = 4.6 \times 10^{-9}$ G. Pu/L. (4 STAGES)
4 – $(N_s)_{Pu} = (N_s)_U \approx (N_s)_{HNO_3}$
5 – COLUMN TEMPERATURE = 45° C *

* THE EFFECT OF TEMPERATURE ON DISTRIBUTION RATIO FOR Pu, IN THE ABSENCE OF DIRECT DATA, WAS TAKEN AS PROPORTIONAL TO THAT FOR U

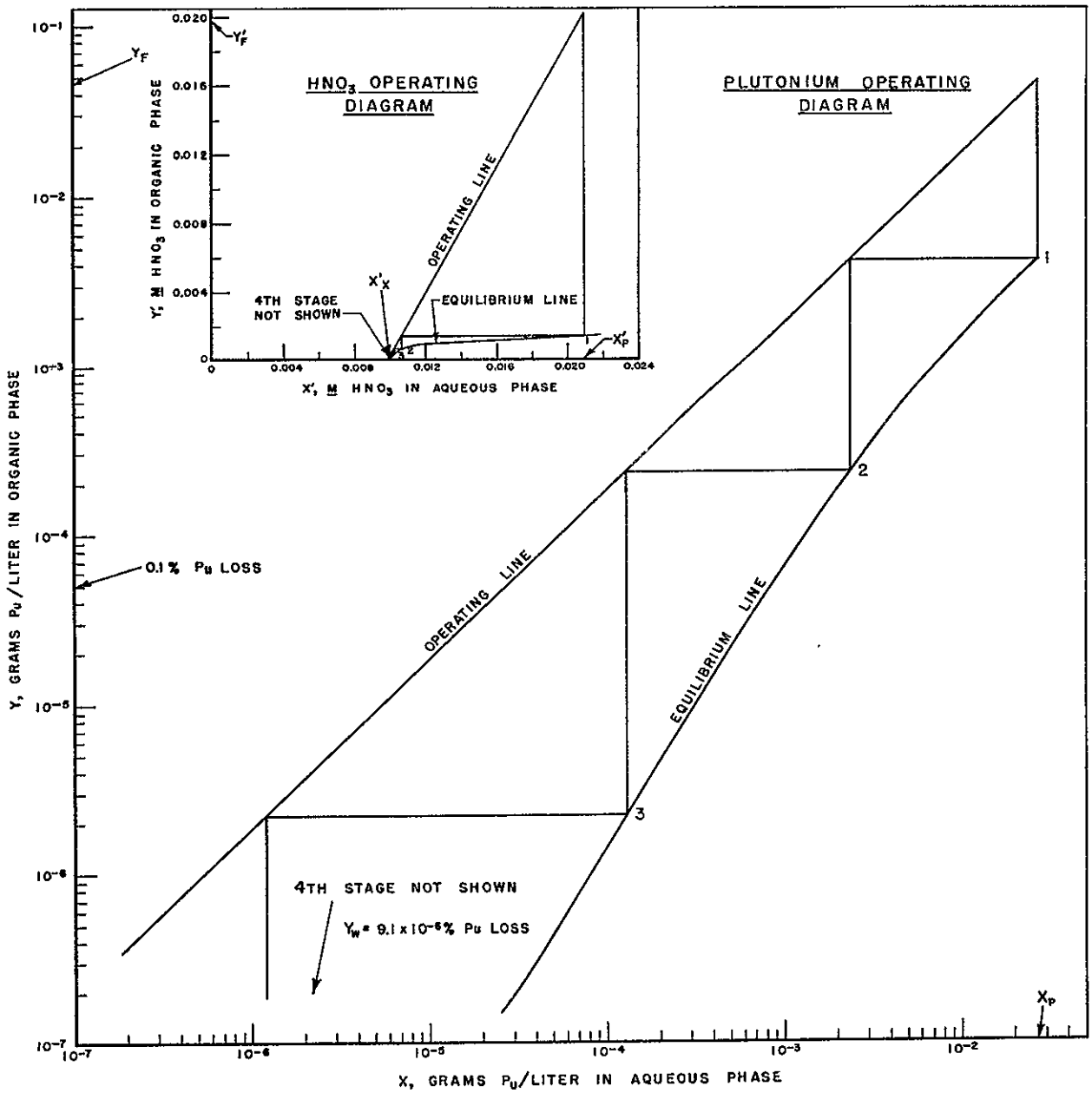

[redacted]

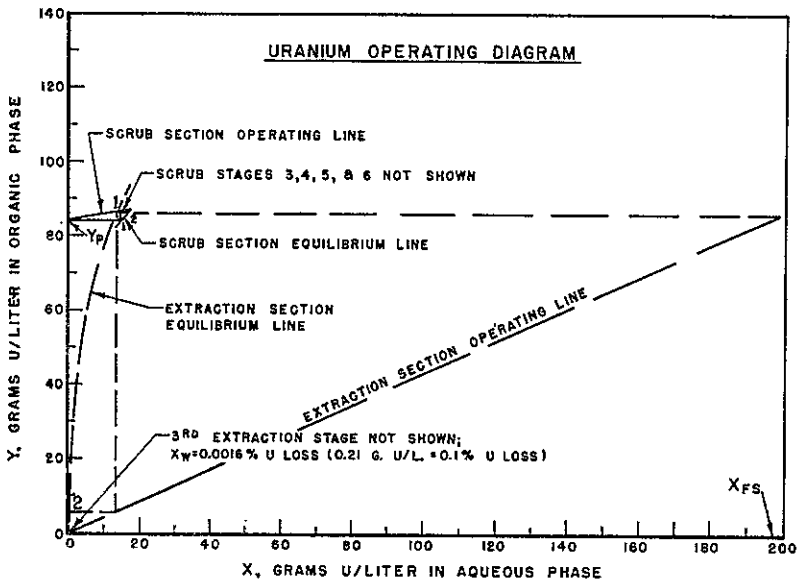

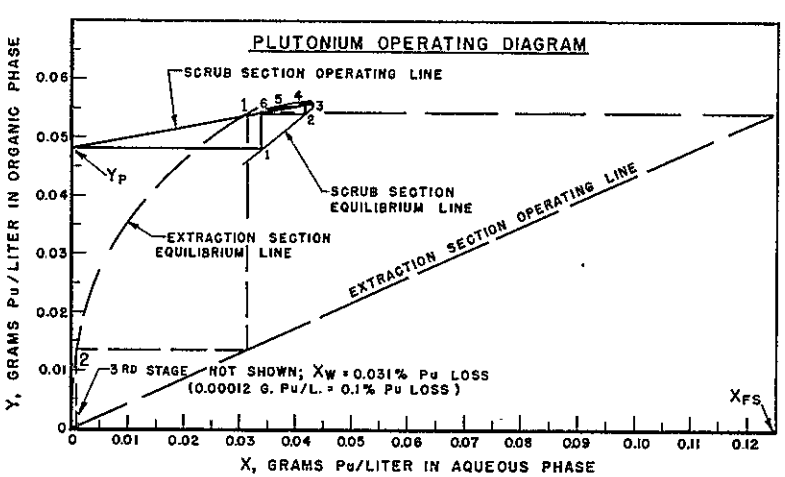

BASES

1 - EQUILIBRIUM DATA FROM KAPL-602.
2 - PUREX HW# 3 FLOWSHEET.
3 - X_W = 0.0033 G. U/L. AND 0.000038 G. Pu/L. (3 EXTRACTION SECTION STAGES).
4 - SINGLE SCRUB COLUMN (6 SCRUB SECTION STAGES).
5 - $(N_S)_U = (N_S)_{Pu} = (N_S)_{HNO_3}$.
6 - COLUMN TEMPERATURE = 25° C.

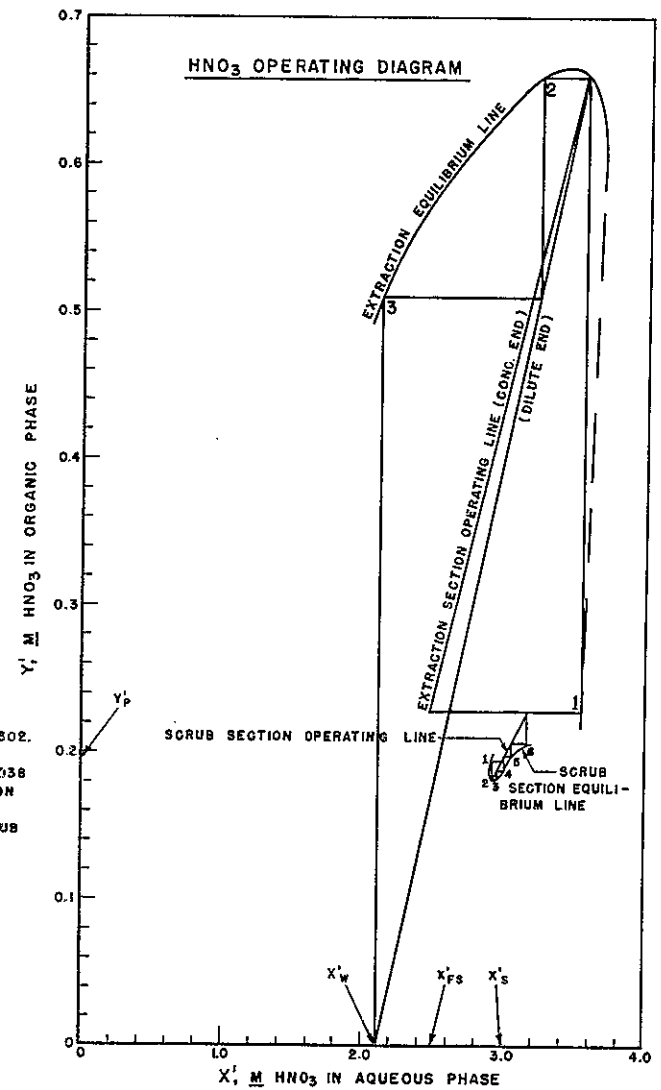

FIGURE V-5

I A COLUMN OPERATING DIAGRAMS

HW-31000

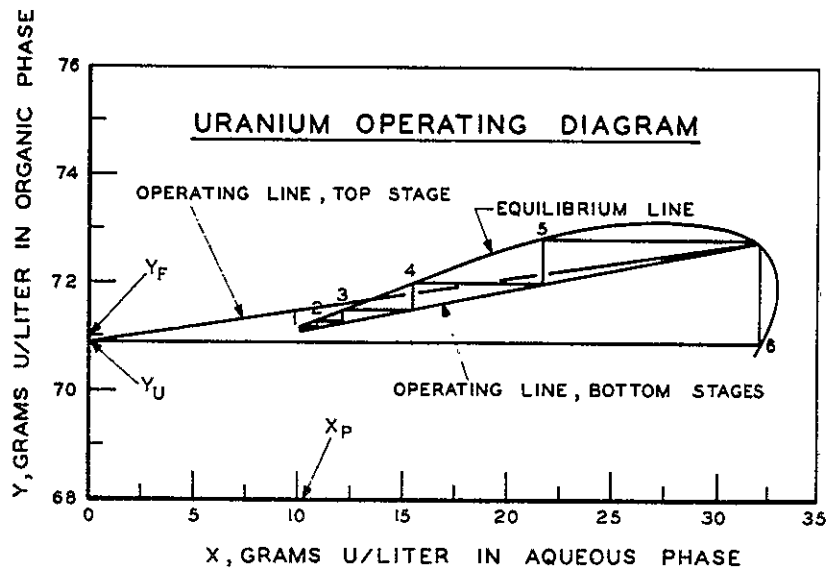

BASES:

1 - EQUILIBRIUM DATA FROM KAPL-602.
2 - PUREX HW#3 FLOWSHEET.
3 - $Y_W = 1.6 \times 10^{-5}$ G. Pu/L. (6 STAGES m = 002).
4 - $(N_S)_U = (N_S)_{Pu} = (N_S)_{HNO_3}$.
5 - COLUMN TEMPERATURE = 25°C.

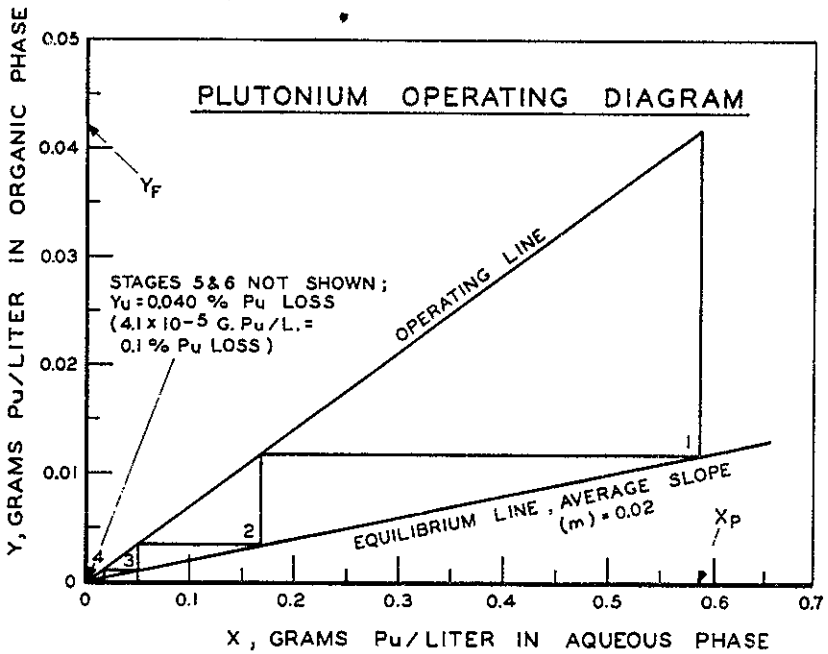

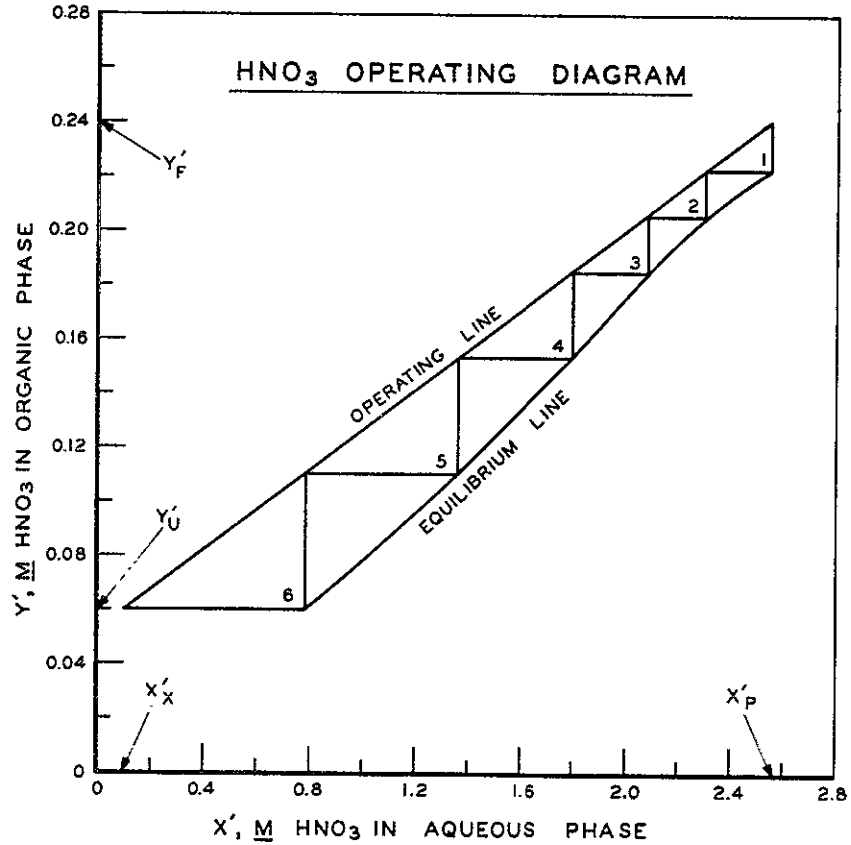

FIGURE V-6

IBX COLUMN OPERATING DIAGRAMS

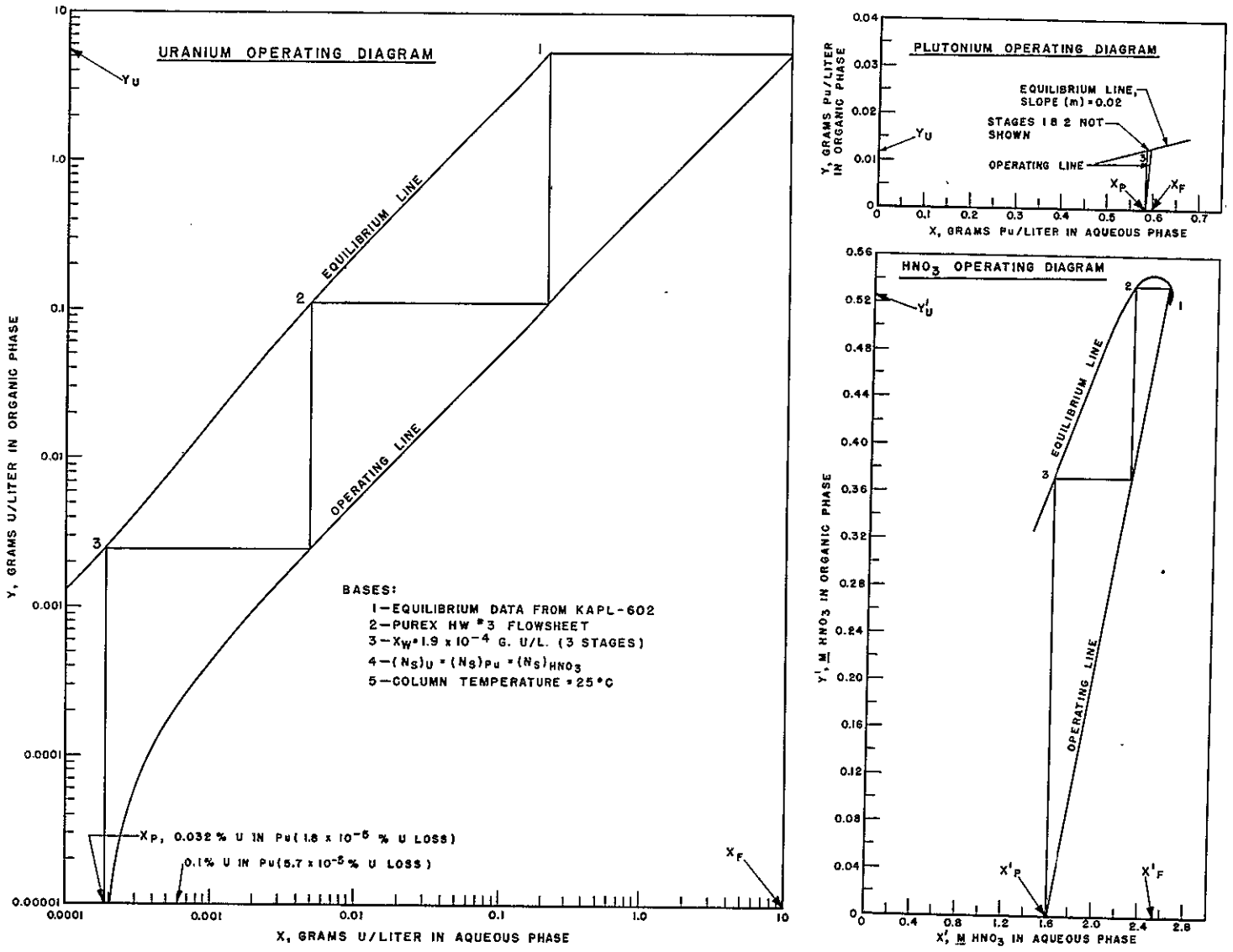

FIGURE V-7

IBS COLUMN OPERATING DIAGRAMS

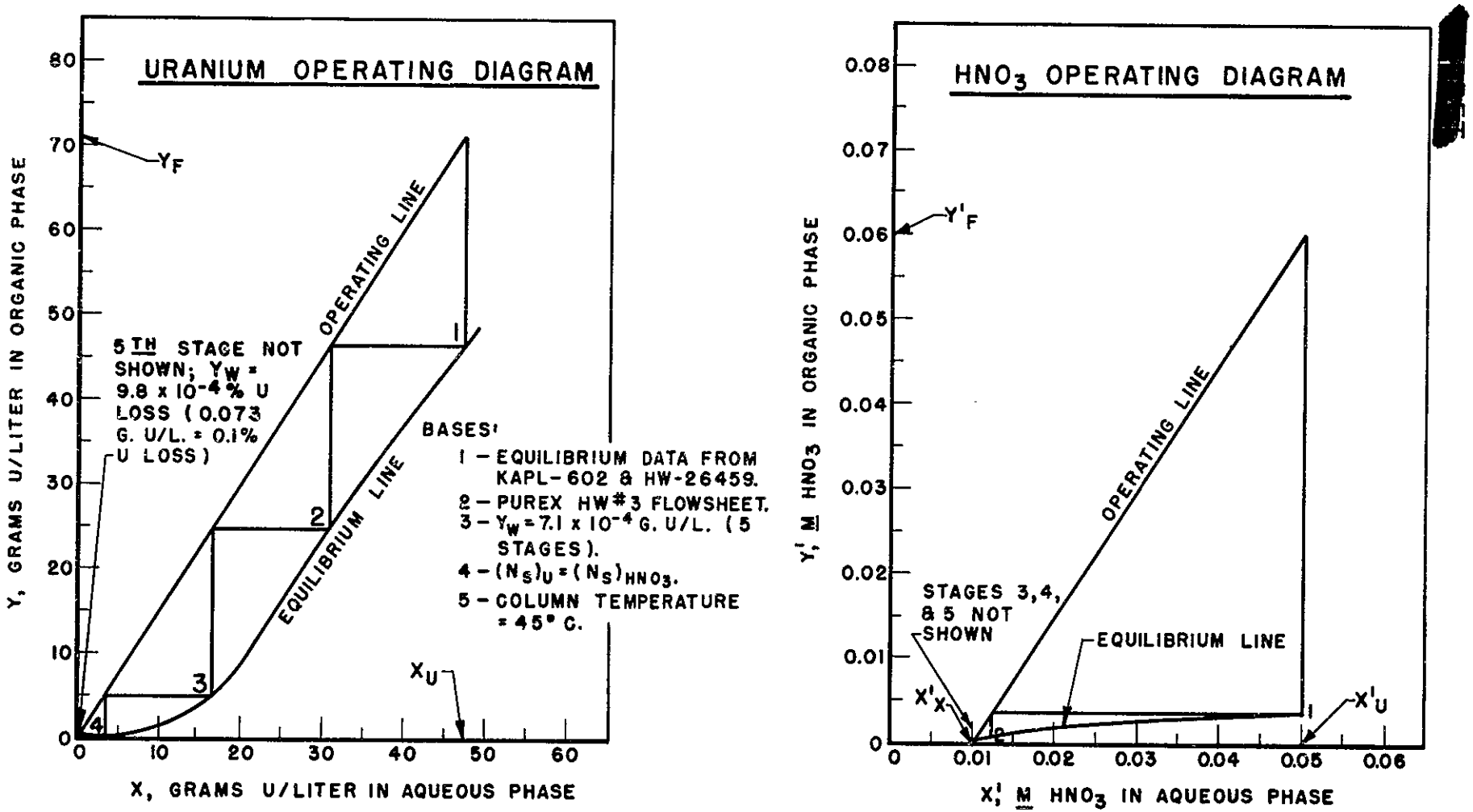

FIGURE V-8

I C COLUMN OPERATING DIAGRAMS

HW-31000

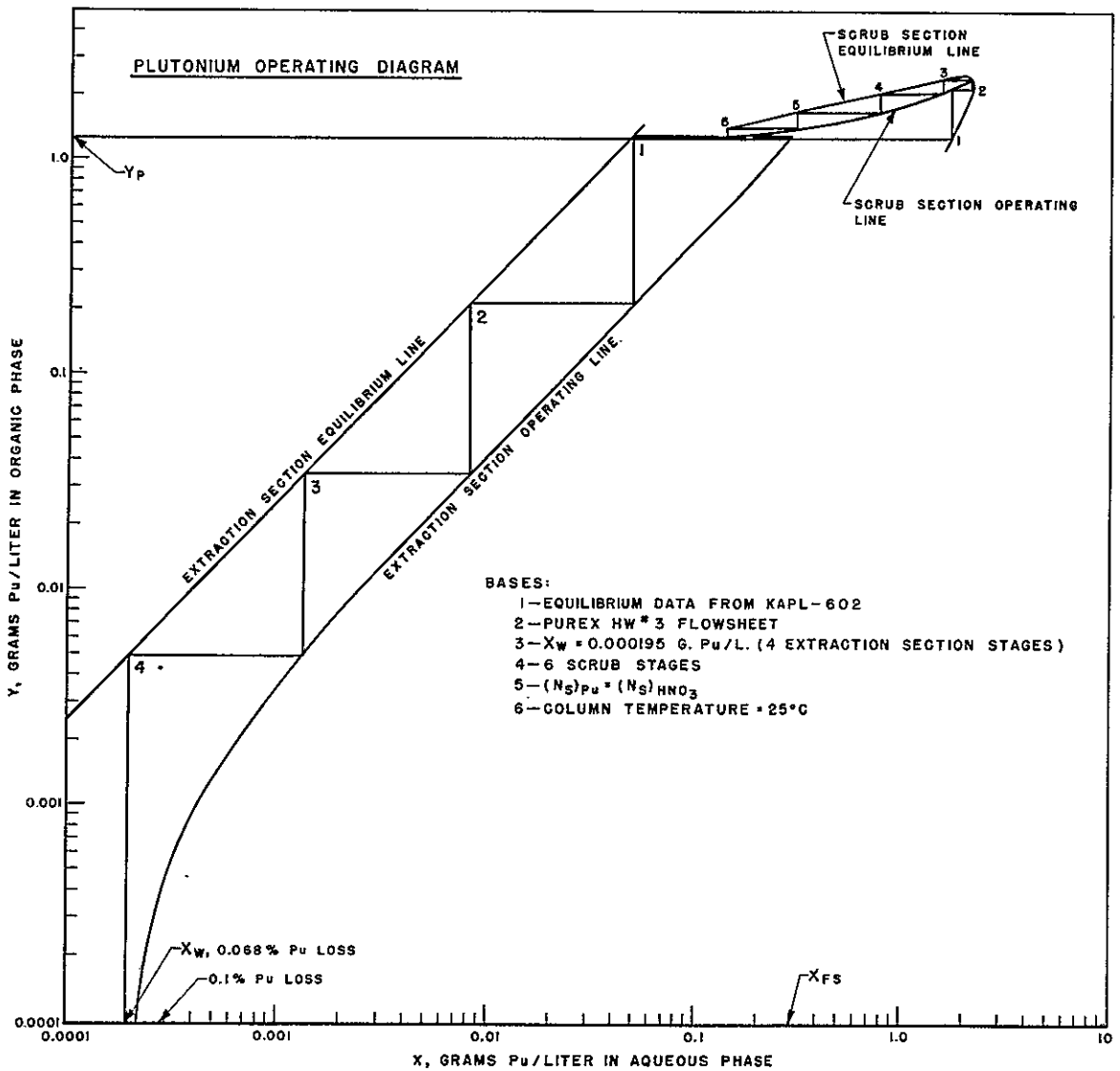

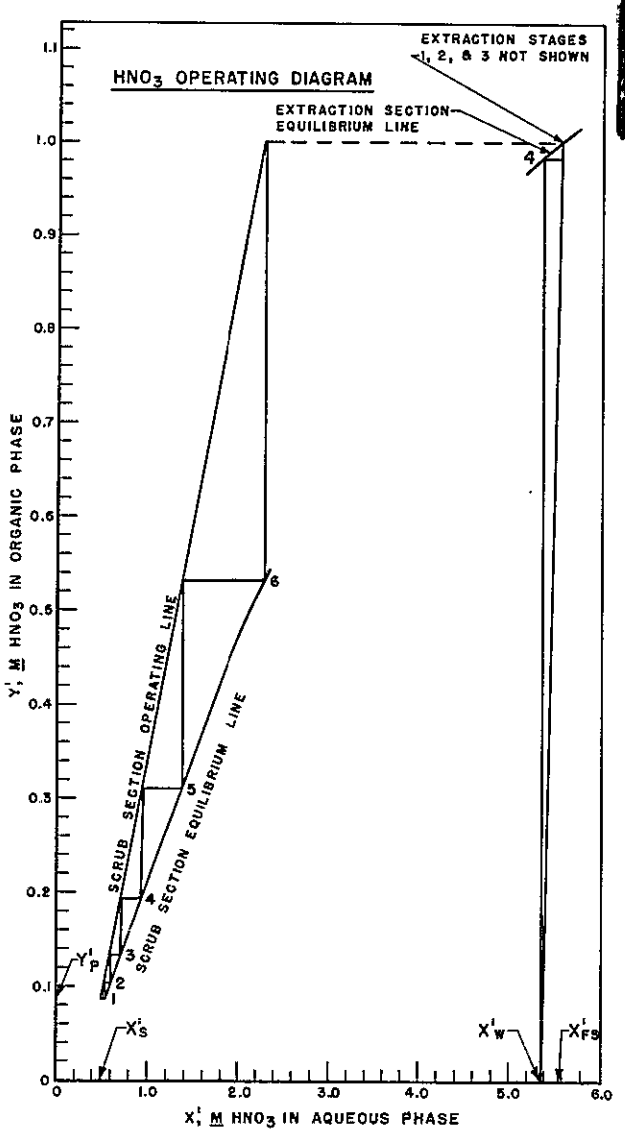

FIGURE V-9

2 A COLUMN OPERATING DIAGRAMS

HW-31000

[redacted]

FIGURE V-10

2 B COLUMN OPERATING DIAGRAMS

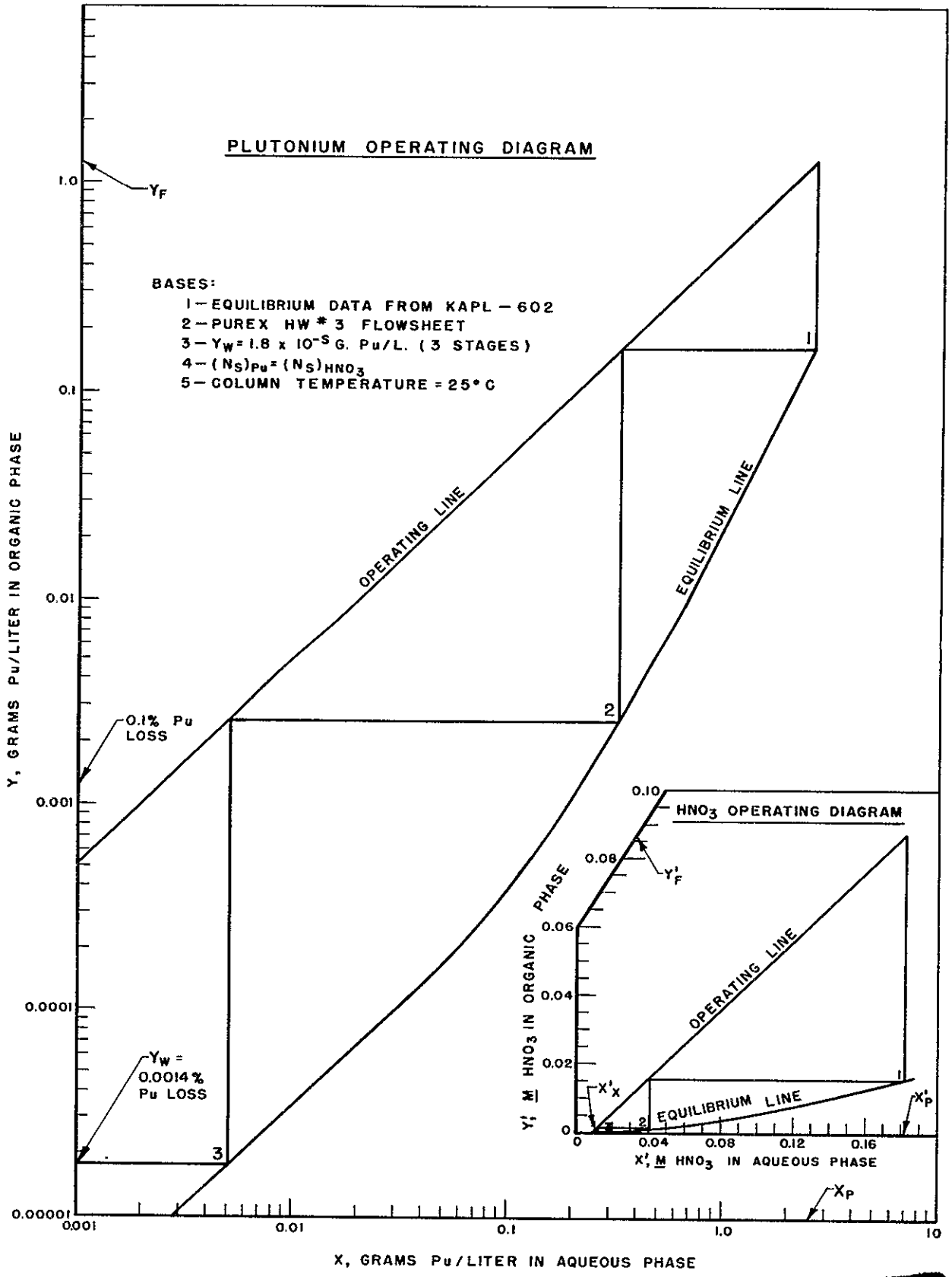

[redacted]

FIGURE V-11

2 A – 2 B COLUMN (REFLUX FLOWSHEET) OPERATING DIAGRAMS

BASES:

1 – EQUILIBRIUM DATA FROM KAPL-602
2 – PUREX HW #3 FLOWSHEET (ALTERNATIVE Pu DECONTAMINATION CYCLE)
3 – X_W = 0.00016 G. Pu/L. (5 2A EXTRACTION SECTION STAGES) AND Y_W = 0.000058 G. Pu/L. (5 2B COLUMN STAGES)
4 – 6 2A SCRUB SECTION STAGES
5 – $(N_S)_{Pu} = (N_S)_{HNO_3}$
6 – COLUMN TEMPERATURE = 25°C

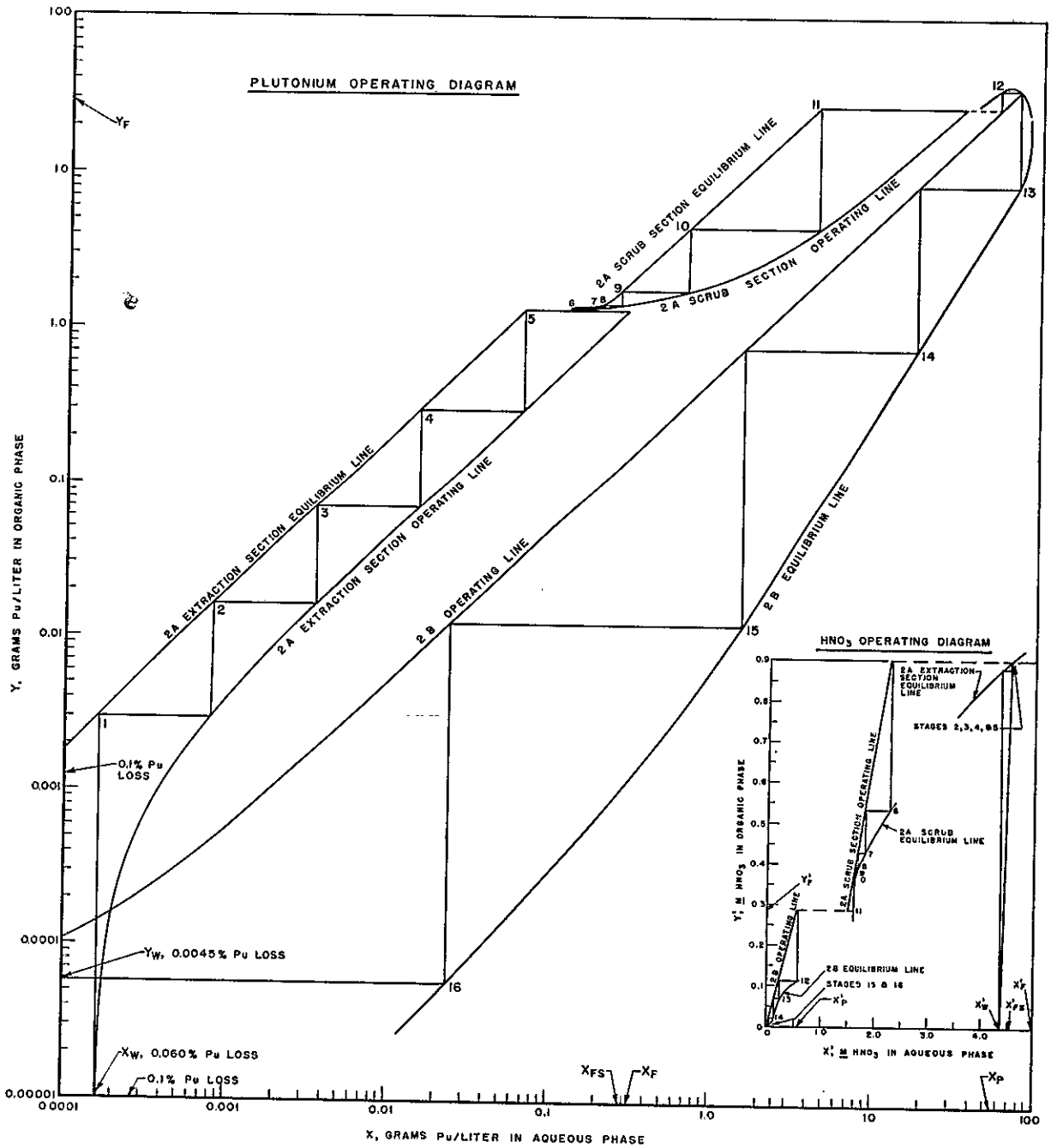

FIGURE V-12

MINIMUM THEORETICAL EXTRACTANT FLOW REQUIREMENTS

A-TYPE COLUMN

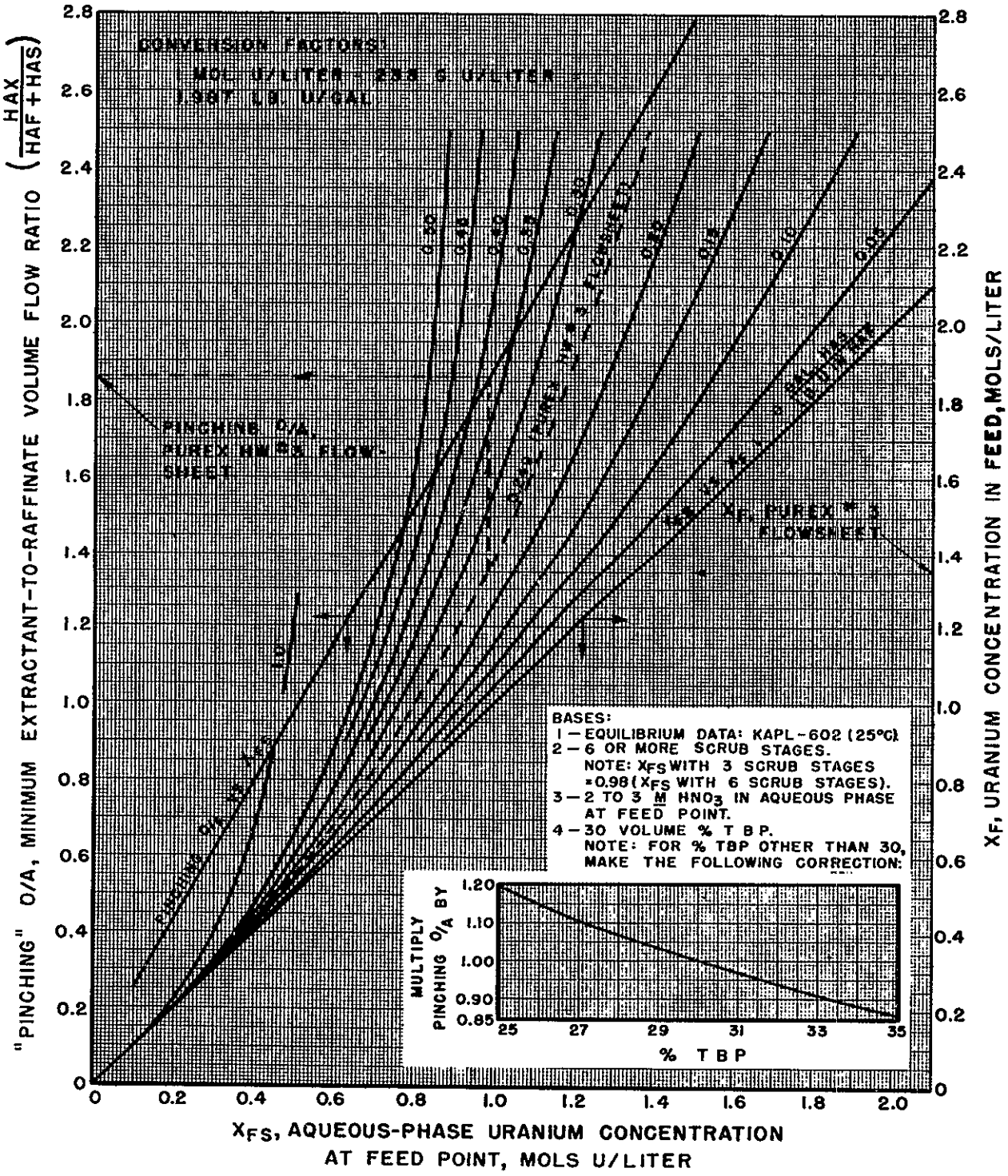

FIGURE V-13

MINIMUM THEORETICAL EXTRACTANT FLOW REQUIREMENTS

C-TYPE COLUMN

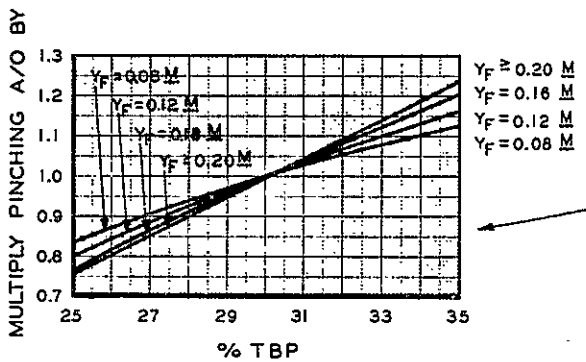

BASES:

1 - EQUILIBRIUM DATA: KAPL-602 AND HW-26459.

2 - 30 VOLUME % TBP.

NOTE: FOR % TBP OTHER THAN 30 MAKE THE FOLLOWING CORRECTION.

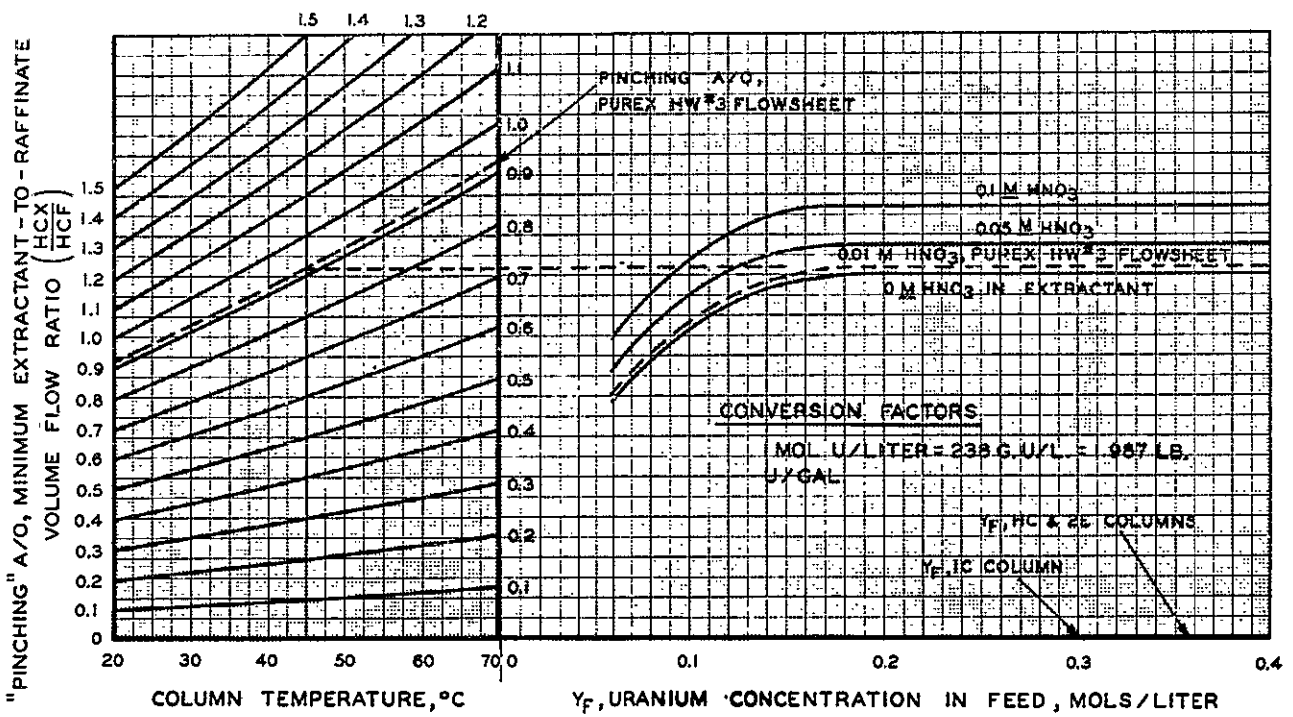

FIGURE V-14

THREE TYPES OF PHASE DISPERSION

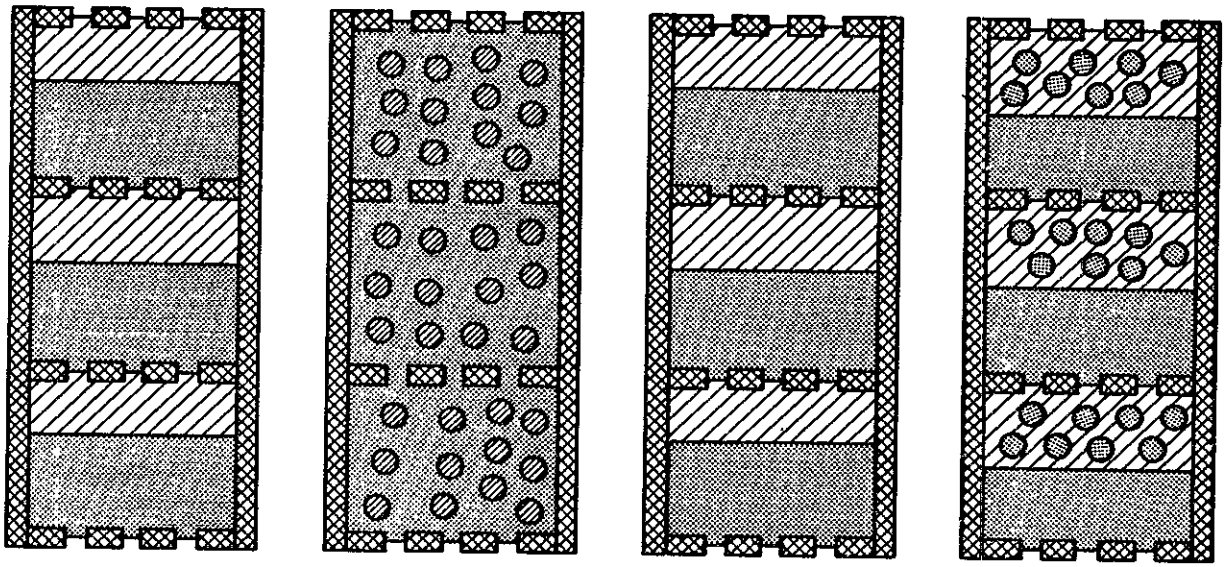

QUIESCENT PORTION OF PULSE CYCLE | UP | QUIESCENT | DOWN

(a) MIXER-SETTLER-TYPE OPERATION
PHASE DISPERSION VARIATION IN THE COURSE OF A PULSE CYCLE

PLATES AND COLUMN WALL
LIGHT PHASE
HEAVY PHASE

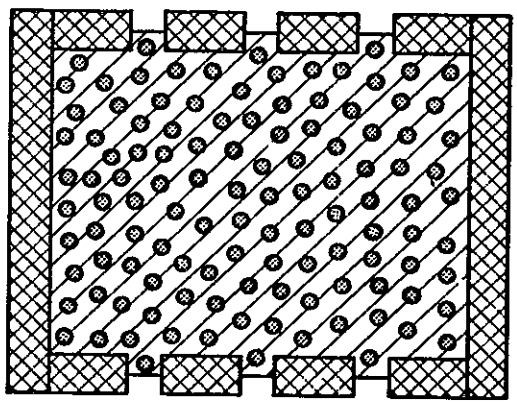

(b) EMULSION-TYPE OPERATION

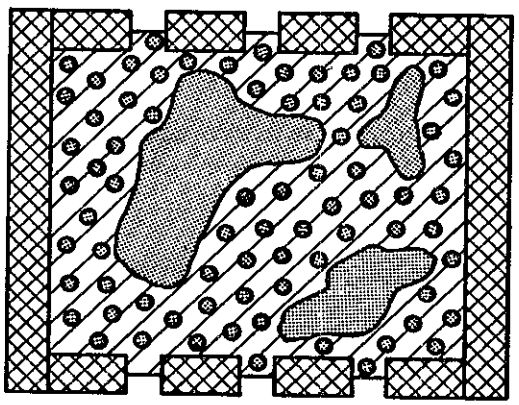

(c) COALESCENCE CHARACTERISTIC OF UNSTABLE OPERATION

PLATES AND COLUMN WALL
CONTINUOUS PHASE
DISPERSED PHASE

Flowsheet conditions: Purex HW #3, aqueous phase continuous. Temperature = 25° C.

Diffusing component: UNH

Plate section: Stainless-steel plates on a 2-in. spacing with 1/8-inch holes, 23% free area. Louver plates located 14, 40, 80, and 120 in. below top extraction-section plate. Height = 13.5 ft., diameter = 24 in.

Pulse amplitude: 1.1 in.

Data points:
3-in. column: Cartridge height = 9 to 12 ft., amplitude = 1.0 in.
8-in. column: Cartridge height = 8.5 ft., amplitude = 0.9 in.
24-in. column: Cartridge height = 13.5 ft., amplitude = 0.92 in. (prototype of plant column).

Notation:
D = experimental column diam., in.
f = frequency, cyc./min.

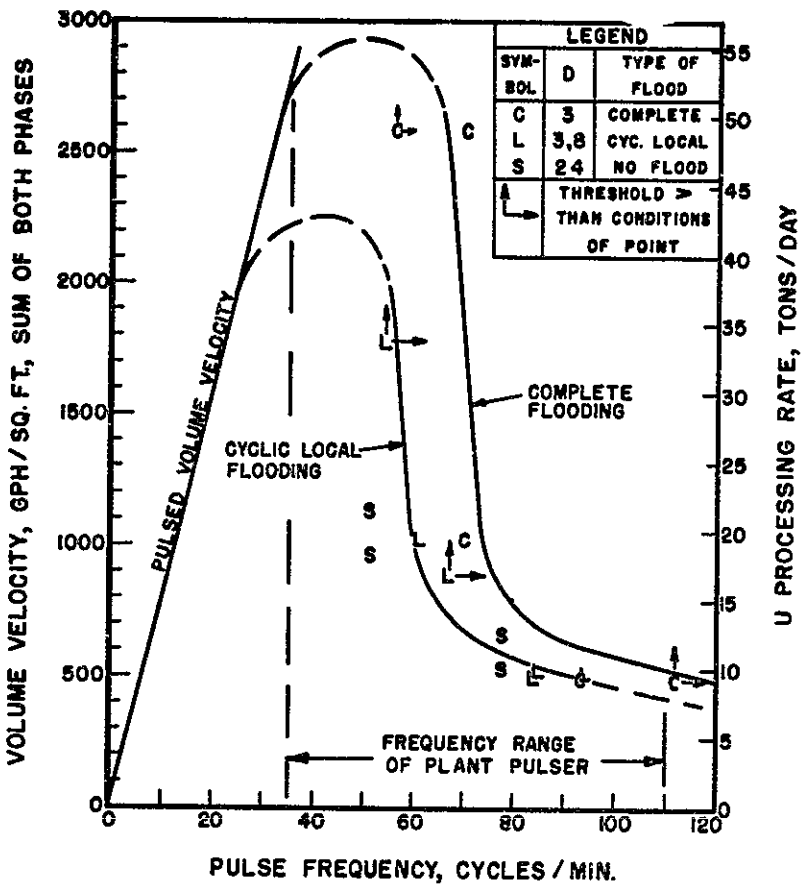

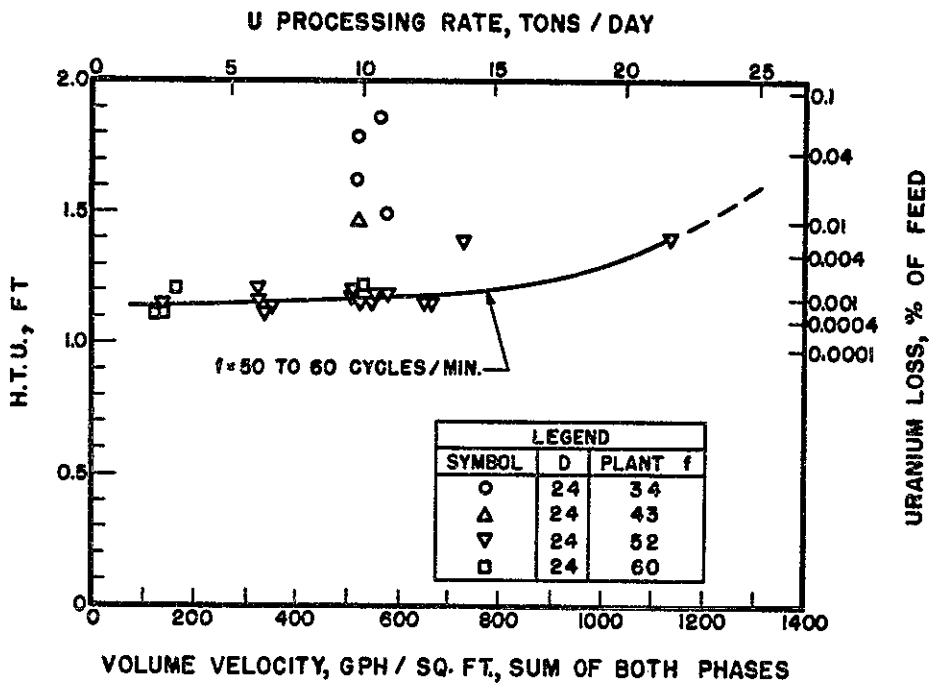

FIGURE V-15

A-TYPE COLUMN EXTRACTION-SECTION PERFORMANCE

FIGURE V-16

EFFECT OF EXTRACTANT FLOW RATE ON A-TYPE COLUMN EXTRACTION EFFECTIVENESS

Flowsheet conditions:	Purex HW #3, modified flow ratio; aqueous phase continuous. Temperature = 25° C.
Diffusing component:	UNH
Column description:	See Figure V-15.
Pulse amplitude:	1.1 in.
U processing rate:	2 to 14 tons/day.
Data points:	24-in.-diameter prototype of plant column, cartridge height = 13.5 ft., amplitude = 0.92 in.

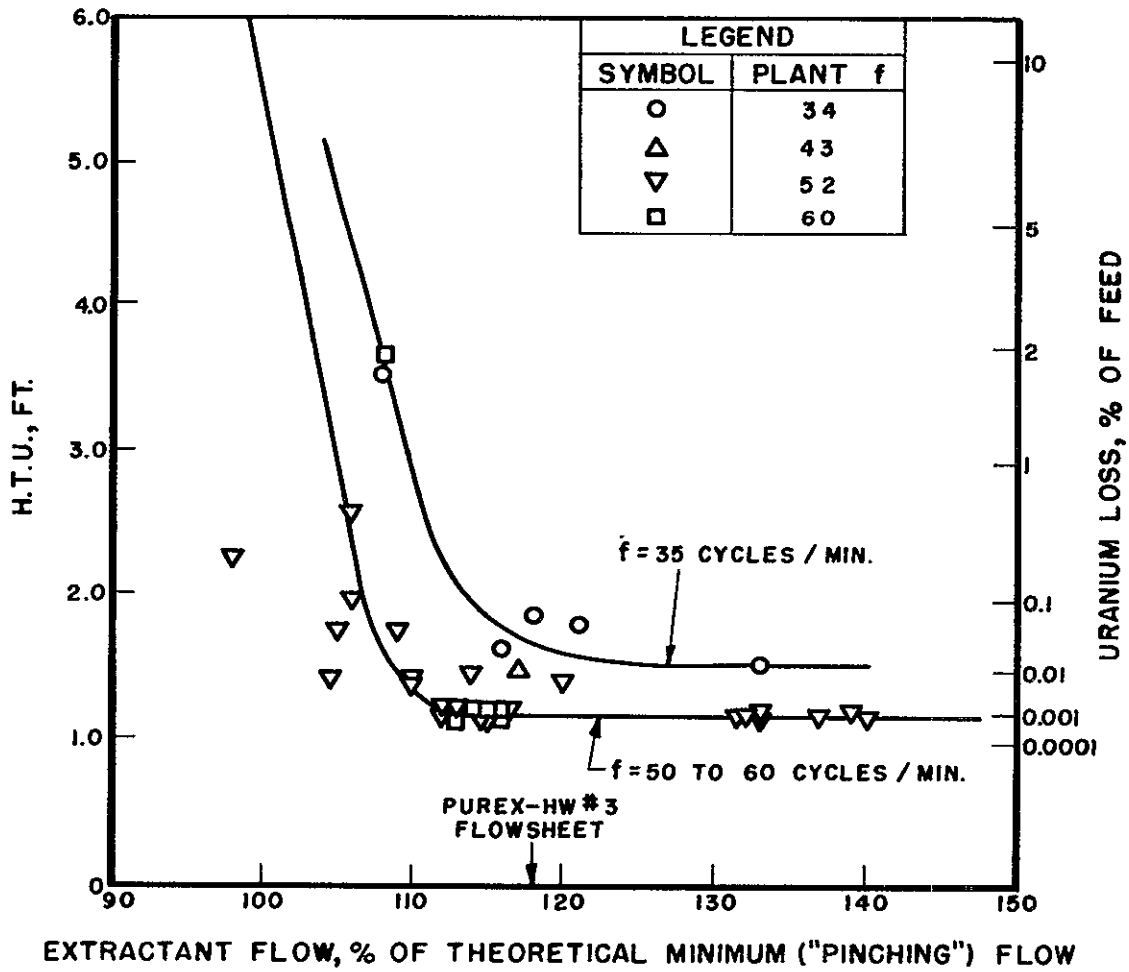

[redacted]

FIGURE V-17

FLOODING CHARACTERISTICS OF THE A-TYPE COLUMN SCRUB SECTION

Flowsheet conditions: Purex HW #3, organic feed densities as shown; aqueous phase continuous. Temperature = 25° C.

Plate section: Stainless-steel plates on 2-in. spacing with 1/8-in. holes. 23% free area. Louver plates located at bottom and at 70 and 106 in. above bottom of scrub section cartridge. Height = 13.2 ft., diameter = 32 in.

Pulse amplitude: 0.6 in.

Data points (instability thresholds):

3-in. column: cartridge height = 9 to 13 ft., amplitude = 0.6 to 1.0 in.

32-in. column: cartridge height = 13.2 ft., amplitude = 0.6 in. (prototype of plant column).

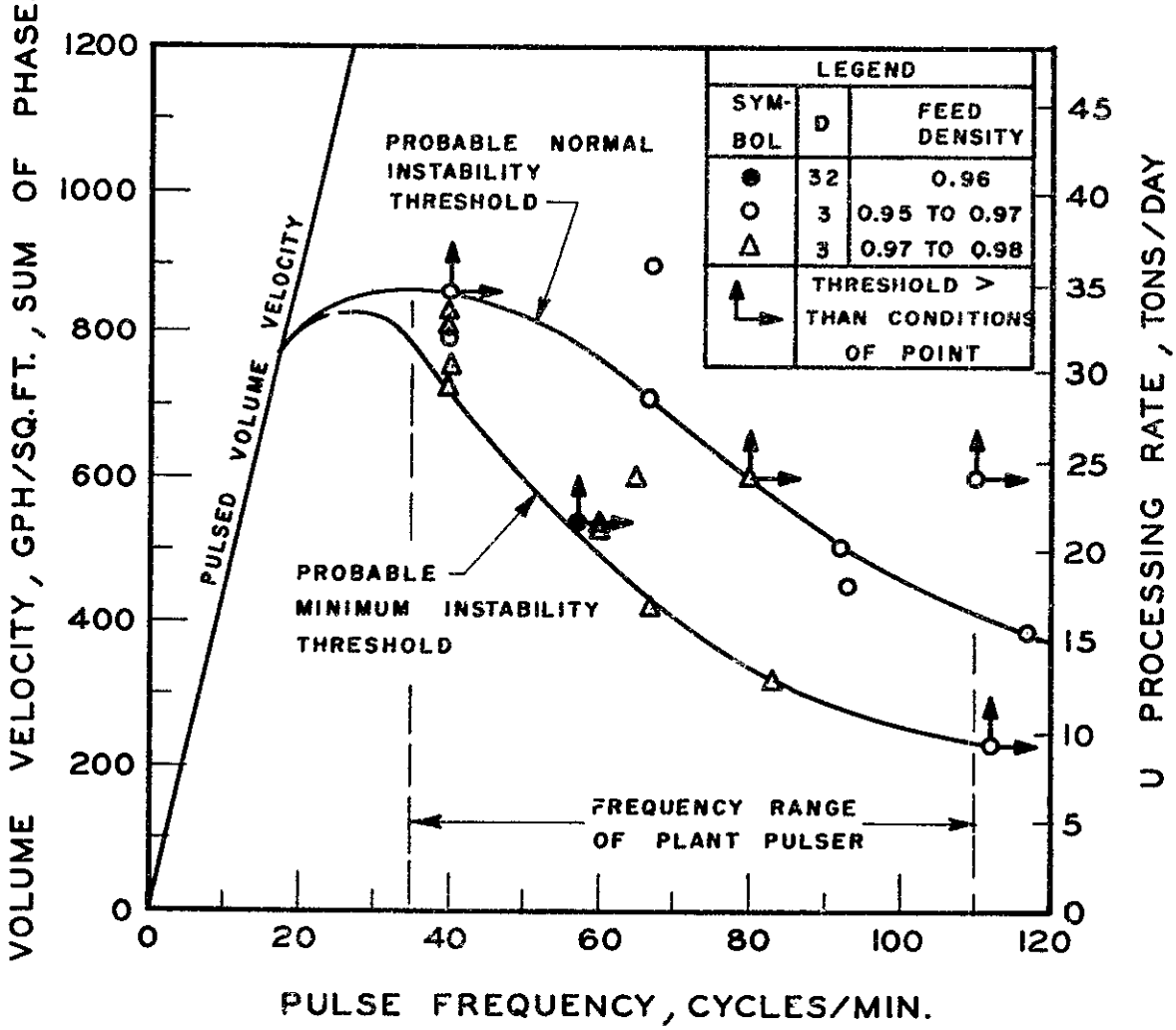

[redacted]

Flowsheet conditions: Purex HW #3, organic phase continuous. Temperature = 25° C., unless otherwise indicated.

Diffusing component: UNH

Plate section: Fluorothene plates with 3/16-in. holes, 23% free area, spaced 4 in. apart. Height = 18.0 ft. diameter = 34 in.

Pulse amplitude: 0.53 in.

Data points:

3-in. column: Cartridge height = 9 ft., amplitude = 0.5 to 0.8 in.
27-in. column: Cartridge height = 18 ft., amplitude = 0.5 in. (near-prototype of plant column).

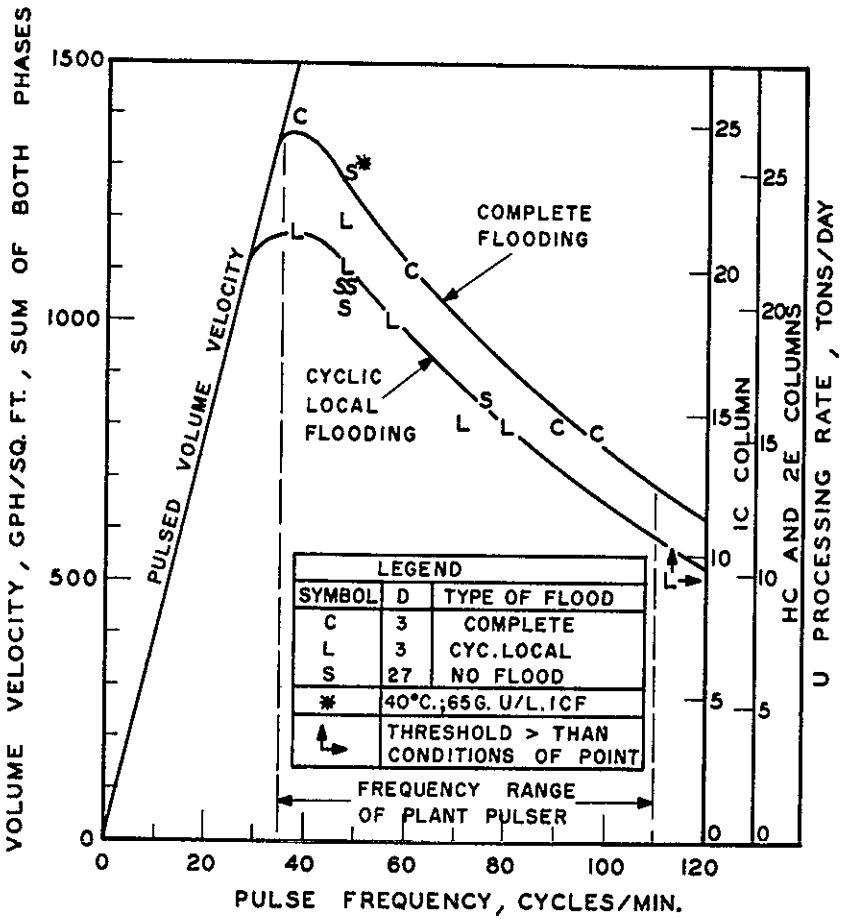

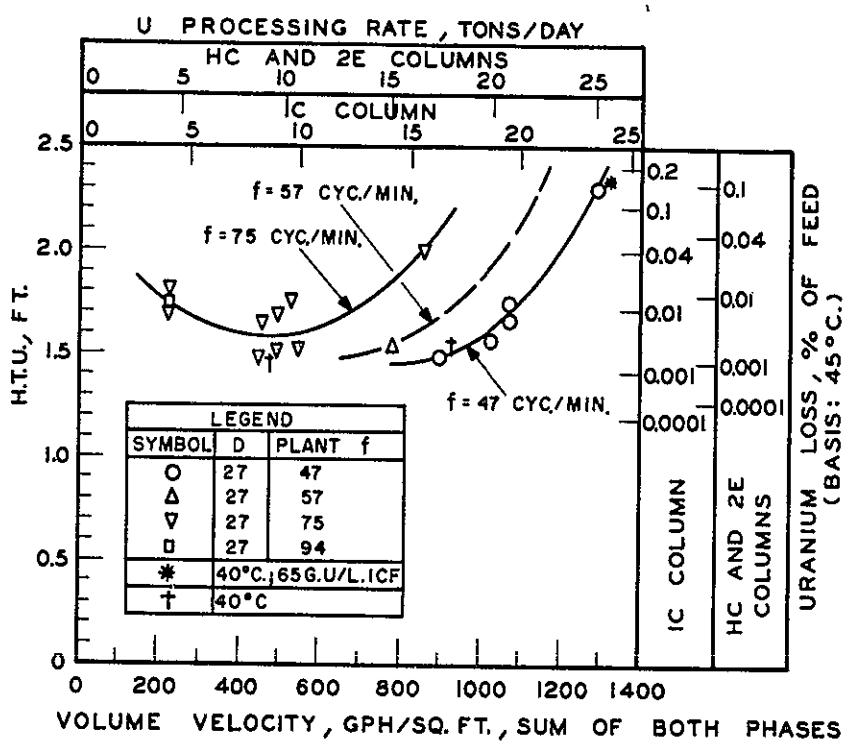

FIGURE V-18

C-TYPE COLUMN PERFORMANCE

HW-31000

FIGURE V-19

FLOODING CHARACTERISTICS OF THE 1B EXTRACTION COLUMN

Flowsheet conditions: Purex HW #3, organic feed densities as shown; aqueous phase continuous. Temperature = 25° C.

Plate section: Stainless-steel plates with 1/8-in. holes, 23% free area. spaced 2-in. apart. Louver plates located 4, 8, 12, 16, 20, and 24 ft. below the top sieve plate. Height = 28 ft., diameter = 27 in.

Pulse amplitude: 0.84 in.

Data points (instability thresholds): 3, 4, 8, and 24 in. diameter columns (see Legend).

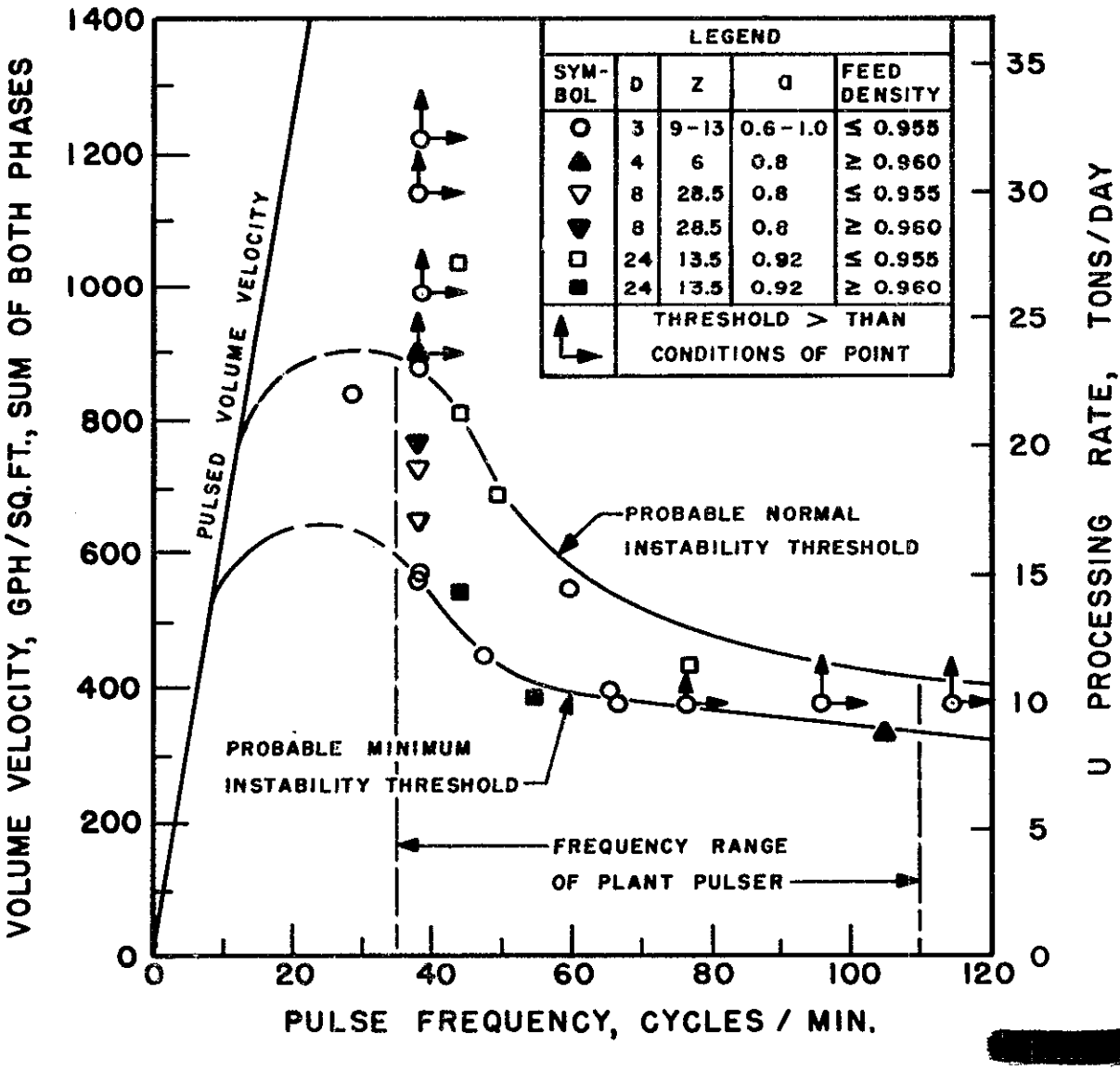

[redacted]

Flowsheet conditions: Purex HW #3, IBS/IBSF flow ratio between 40 and 120% of flowsheet; aqueous phase continuous. Temperature = 25° C.

Diffusing component: UNH

Plate section: Stainless steel plates with 1/8-in. holes, 23% free area, spaced 2 in. apart. Louver plates located 14, 36, 60, 84, 108 and 132 in. below top sieve plate. Height = 13.3 ft., diameter = 8 in.

Pulse amplitude: 0.84 in.

Data points: 8-in.-diameter prototype of plant column; cartridge height = 13.3 ft., amplitude = 0.77 to 1.0 in.

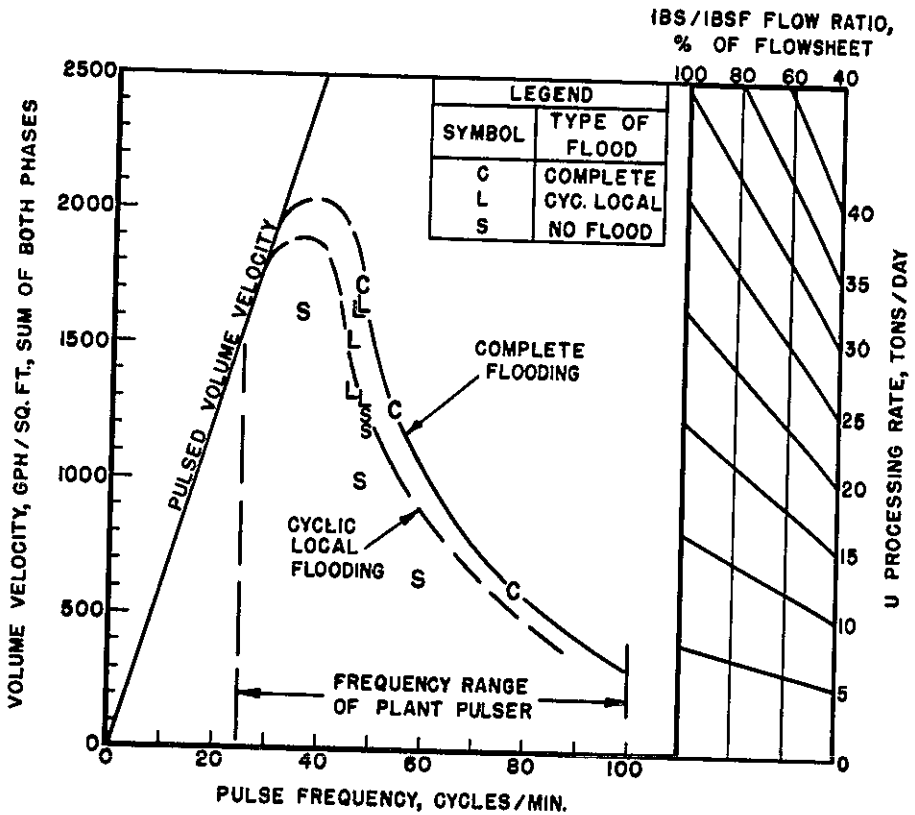

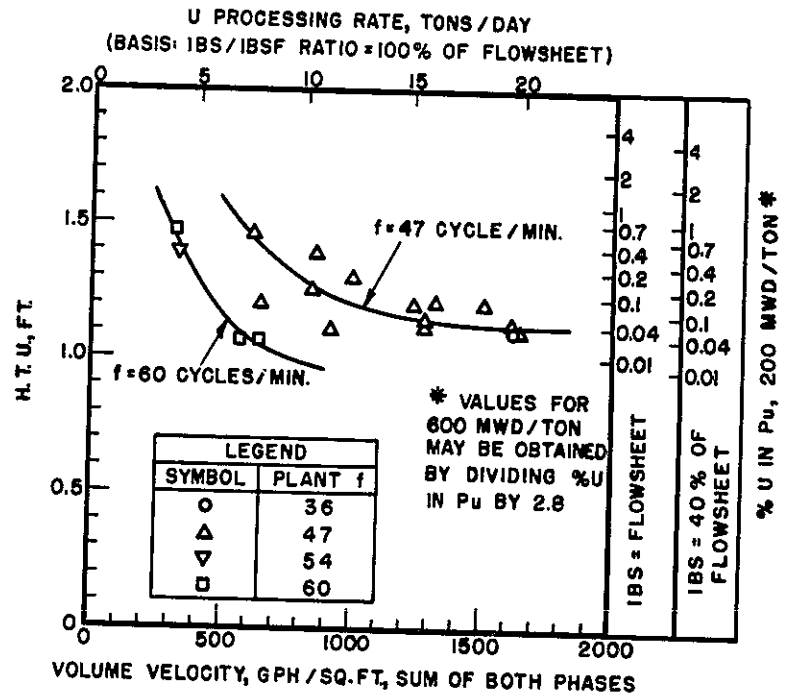

FIGURE V-20

IB SCRUB COLUMN PERFORMANCE

HW-31000

[redacted]

FIGURE V-21

EFFECT OF IBS/IBSF FLOW RATIO ON IB SCRUB COLUMN PERFORMANCE

Flowsheet conditions:	Purex HW #3, modified flow ratio; aqueous phase continuous. Temperature = 25° C.
Diffusing component:	UNH
Column description:	See Figure V-20.
Pulse amplitude:	0.84 in.
Pulse frequency:	46 to 48 cycles/min.
U processing rate:	10 to 25 tons/day.
Data points:	8-in.-diameter prototype of plant column; cartridge height = 13.3 ft., amplitude = 0.77 to 1.0 in.

(Note: L next to data points indicates cyclic local flooding during the run.)

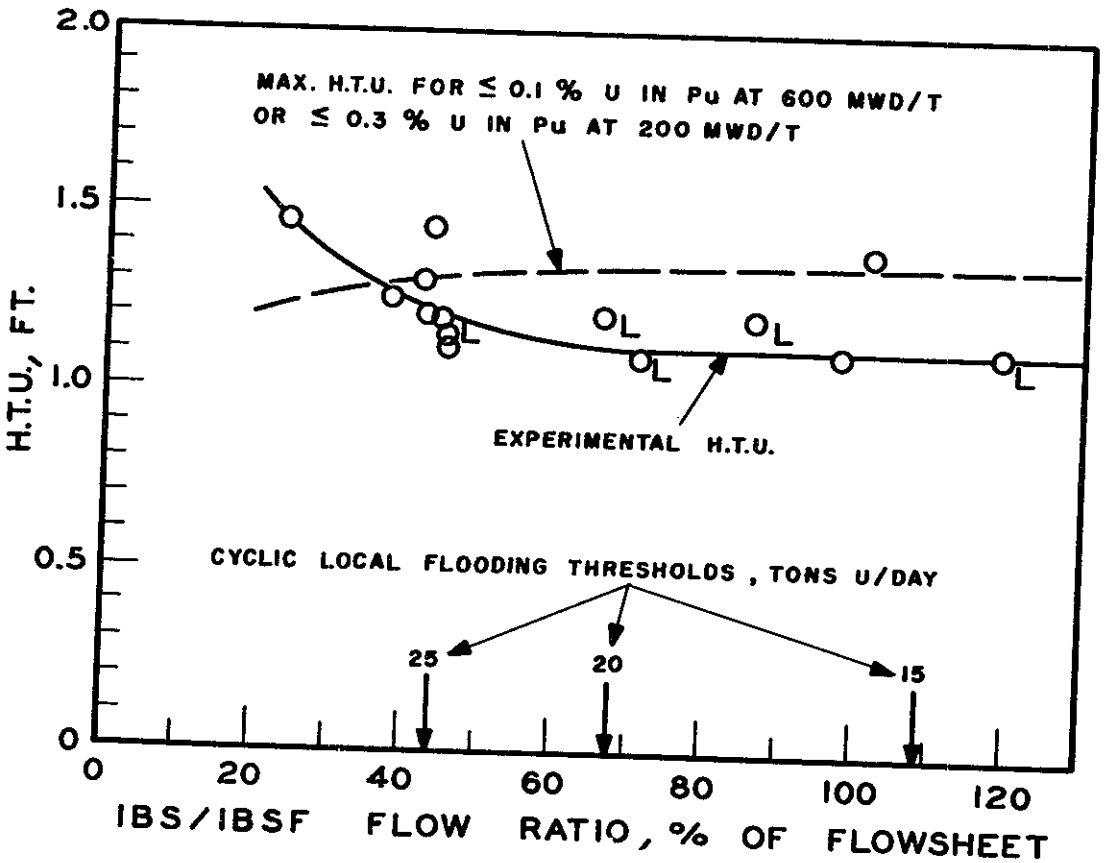

[redacted]

Flowsheet conditions: Purex HW #3, organic phase continuous
Temperature = 25° C.

Diffusing component: Pu $(NO_3)_4$. (U used vice Pu in pilot-plant studies.)

Packed section: 20.9 ft. of 1-in-diameter by 1-in.-long fluorothene (Kel-F) Raschig rings.
Diameter = 7 in.

Pulse amplitude: 1.1 in.

Data points:

3-in. column: Packed height = 9 ft., amplitude = 1.0 in.
8-in. column: Packed height = 22.5 ft., amplitude = 1.0 in. (prototype of plant column).

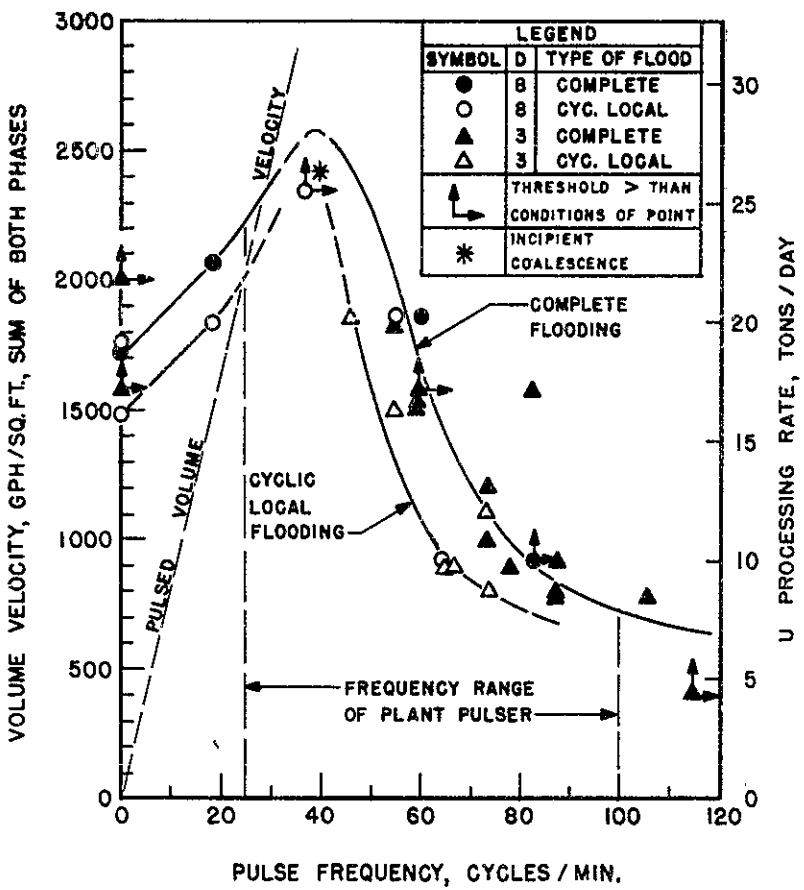

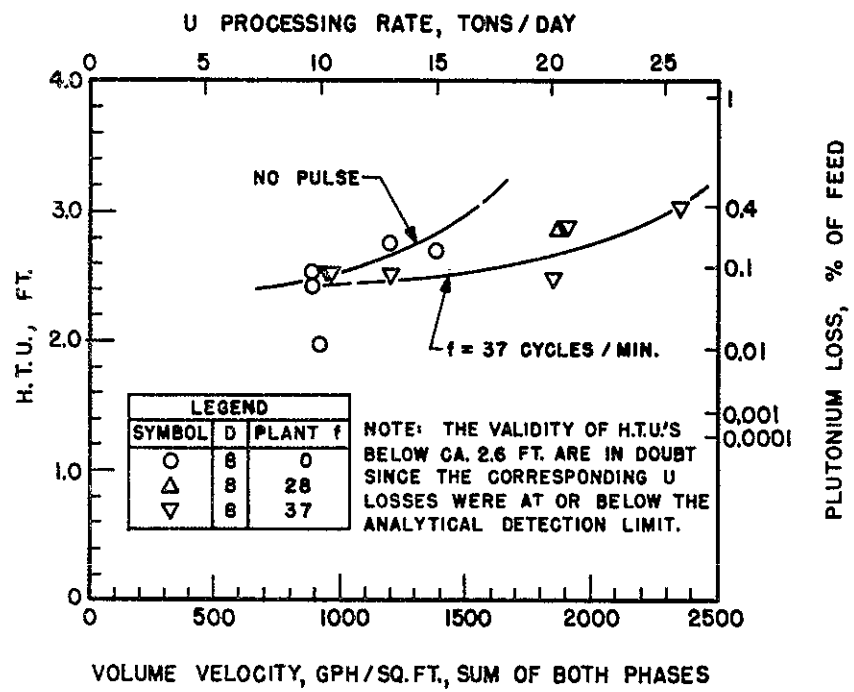

FIGURE V-22

2 A COLUMN EXTRACTION SECTION PERFORMANCE

[redacted]

FIGURE V-23

FLOODING CHARACTERISTICS OF THE 2B COLUMN

Flowsheet conditions: Purex HW #3, aqueous phase continuous. Temperature = 25° C.

Plate section: Stainless-steel plates with 1/8-in. holes, 23% free area, spaced 2 in. apart. Height = 21.0 ft., diameter = 7 in.

Pulse amplitude: 1.1 in.

Data points:

3-in. column: Cartridge height = 9 ft., amplitude = 0.8 to 1.0 in.

8-in. column: Cartridge height = 20.5 ft., amplitude = 1.0 in. (prototype of plant column).

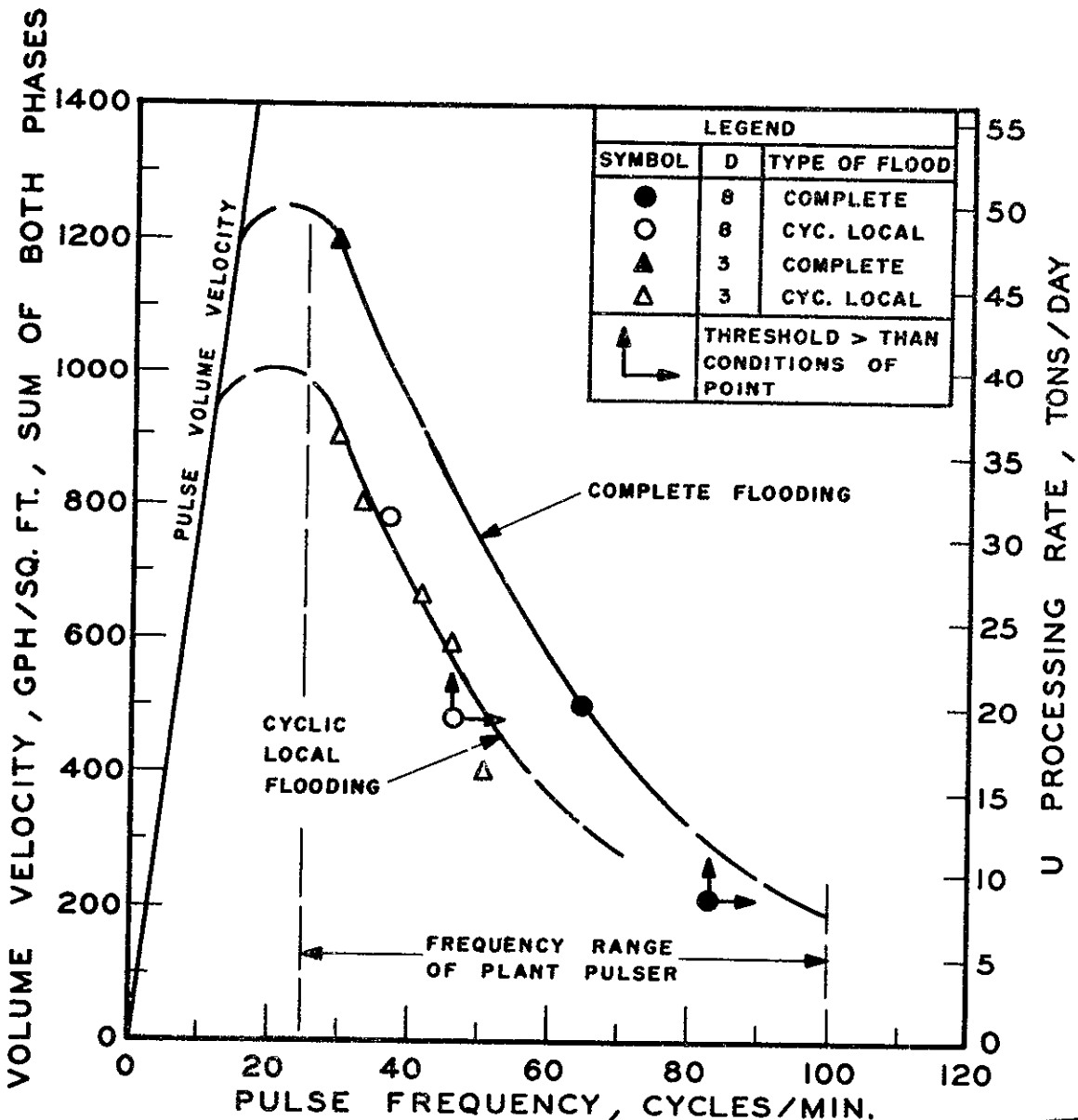

[redacted]

[redacted]

FIGURE V-24

FLOODING CHARACTERISTICS OF THE O-TYPE COLUMN

Flowsheet conditions: Purex HW #3, organic phase continuous. Temperature = 25° C.

Plate section: Fluorothene (Kel-F) plates with 3/16-in. holes, 23% free area, spaced 4 in. apart. Height = 26.3 ft., diameter = 34 in.

Pulse amplitude: 0.53 in.

Data points:

3-in. column: Cartridge height = 9 ft., amplitude = 0.5 in.
8-in. column: Cartridge height = 8.5 ft., amplitude = 0.61 in.
27-in. column: Cartridge height = 18 ft., amplitude = 0.5 in.

Note: Flooding points were determined under IO Column conditions only. The 20 Column capacity may differ slightly from that shown because of its 3-fold greater aqueous-to-organic flow ratio.

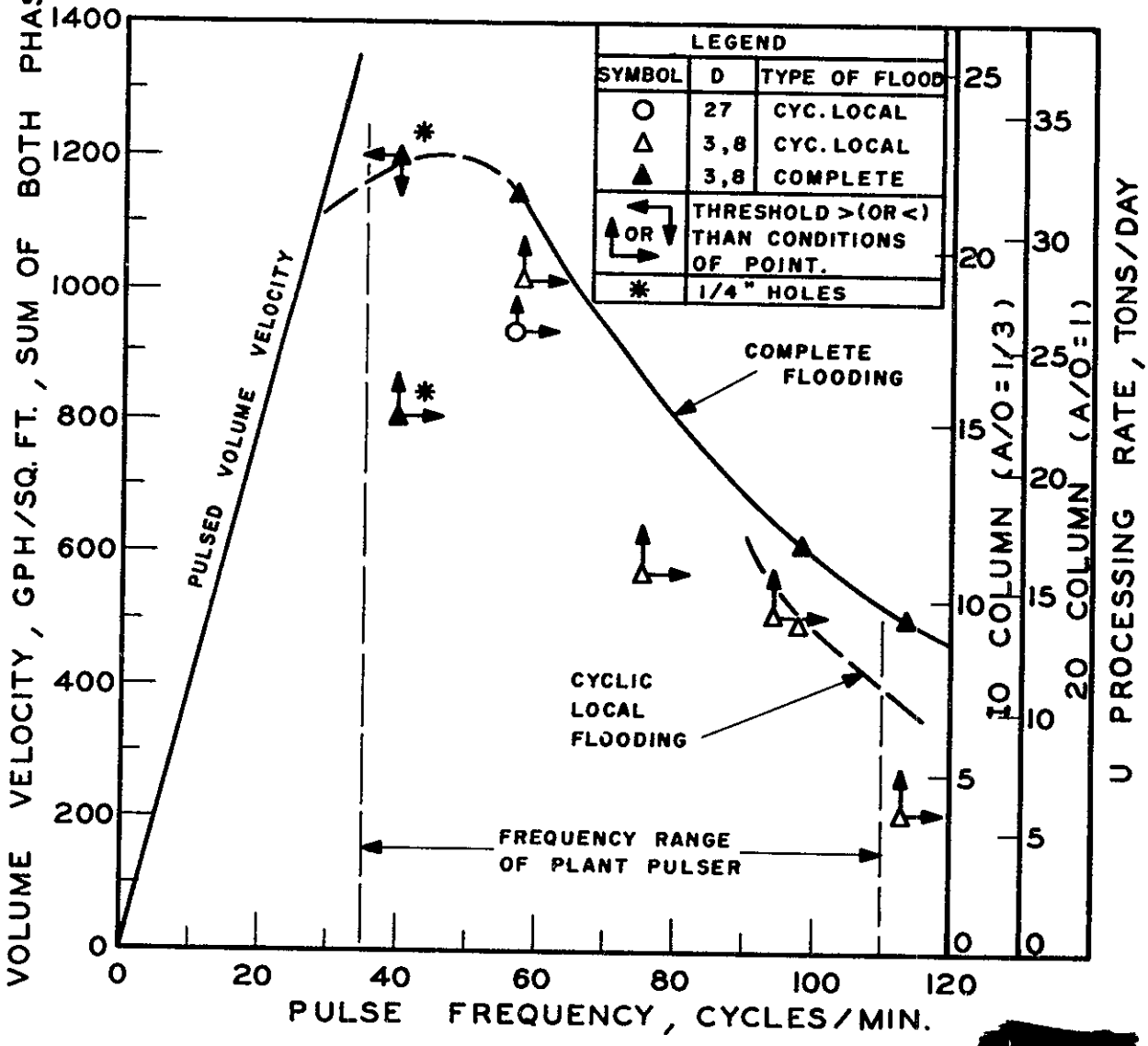

[redacted]

Flowsheet conditions: Purex HW # 3, HCX:HCF flow ratio = 1.3 to 1.9; organic phase continuous. Temperature = 20 to 25° C., unless otherwise noted.

Diffusing component: UNH

Plate section: Stainless-steel nozzle plates with 1/8-in. holes, 10% free area, spaced 4 in. apart. Holes indented 0.05 in. to form nozzles, pointing down. Height = 18 ft., diameter = 34 in.

Pulse amplitude: 0.53 in.

Data points:

3-in. column: Cartridge height = 12 ft., amplitude = 0.5 in.
27-in. column: Cartridge height = 18 ft., amplitude = 0.5 in. (near-prototype of plant column).

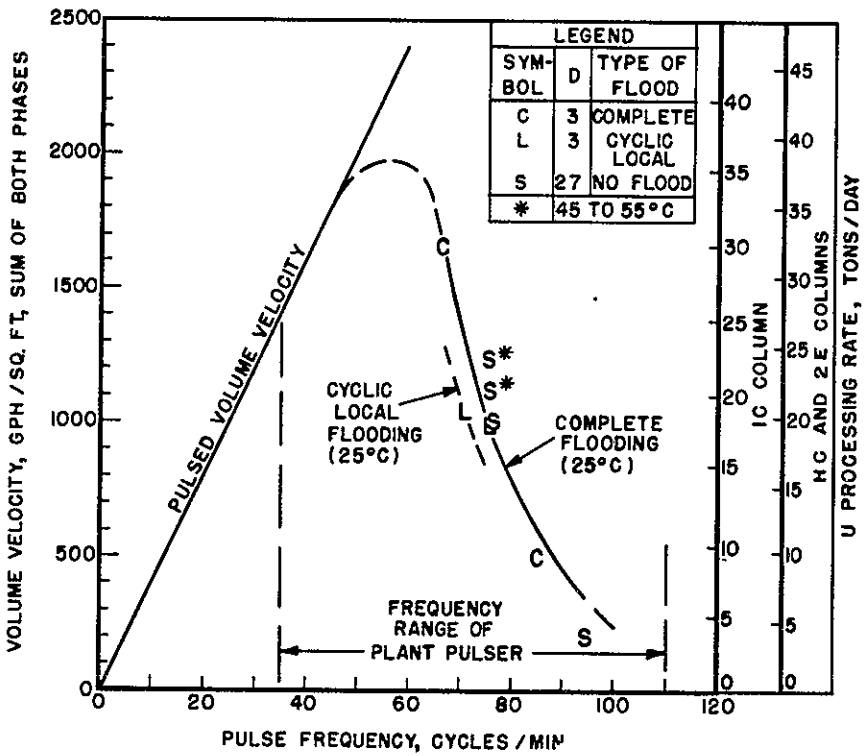

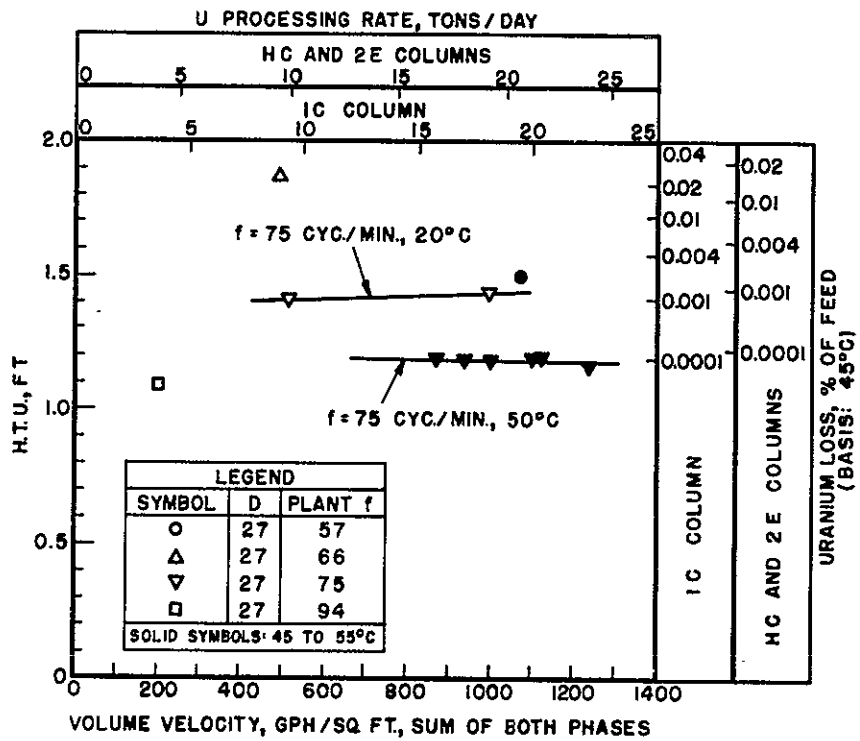

FIGURE V-25

C-TYPE COLUMN PERFORMANCE WITH NOZZLE PLATES

HW-31000

[redacted]

FIGURE V-26

EFFECT OF EXTRACTANT FLOW RATE ON C-TYPE COLUMN EXTRACTION EFFECTIVENESS – NOZZLE-PLATE CARTRIDGE

Flowsheet conditions:	Purex HW #3, modified flow ratio; organic phase continuous. Temperature = 45 to 60° C.
Diffusing component:	UNH
Column description:	See Figure V-25.
Pulse amplitude:	0.53 in.
Pulse frequency:	75 cycles/min.
U Processing rate:	10 to 26 tons/day.
Data points:	27-in.-diameter prototype of plant column (nozzle-plate cartridge), cartridge height = 18 ft. amplitude = 0.5 in.

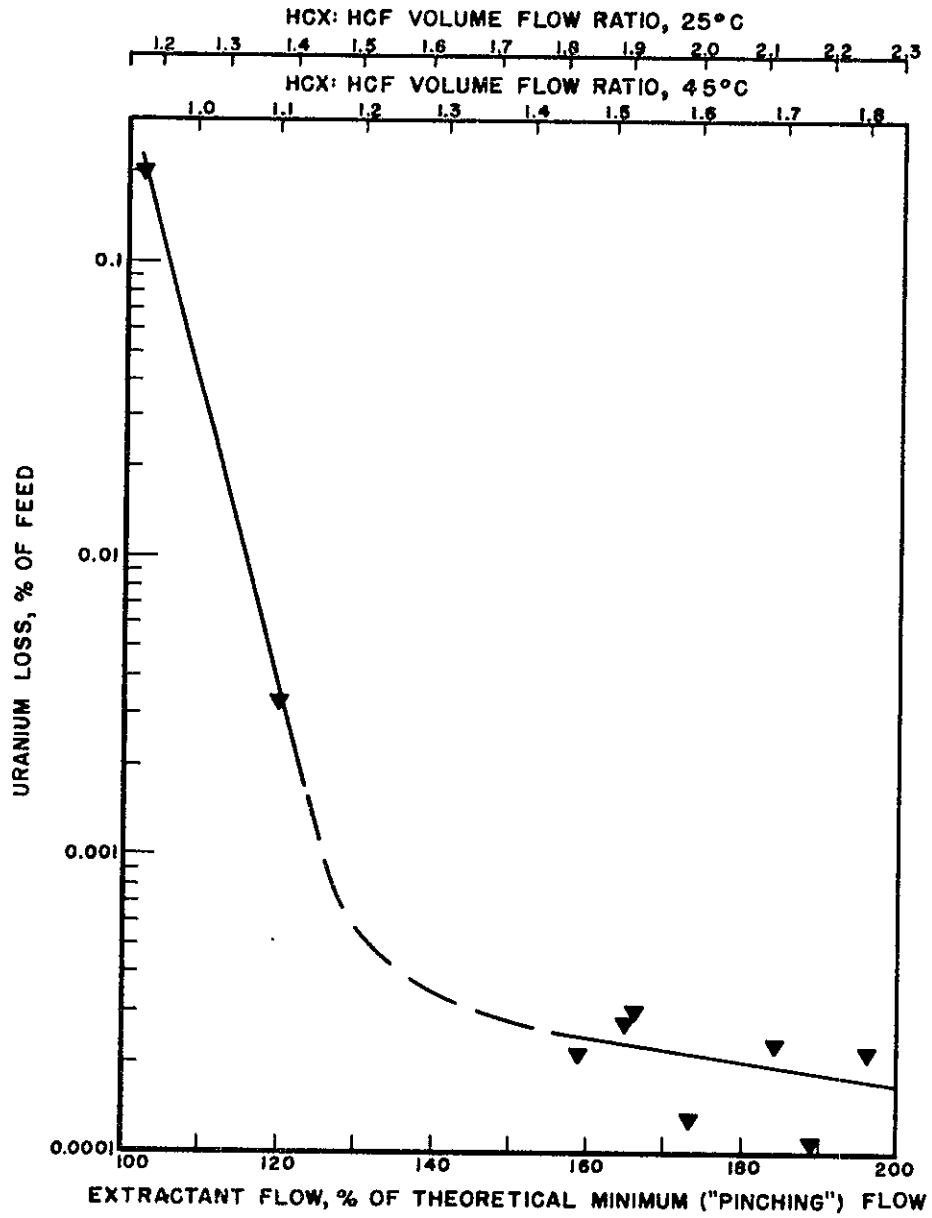

[redacted]

FIGURE V-27

FLOODING CHARACTERISTICS OF THE O-TYPE COLUMNS WITH NOZZLE - PLATE CARTRIDGE

Flowsheet conditions:	Purex HW #3, organic phase continuous. Temperature = 50° C.
Plate section:	Stainless-steel nozzle plates with 1/8-in. holes, 10% free area, spaced 4 in. apart. Holes are indented 0.05 in. to form nozzles, pointing down. Height = 26.3 ft., diameter = 34 in.
Pulse amplitude:	0.53 in.
Data points:	27-in.-diameter column, cartridge height = 18 ft., amplitude = 0.5 in.

Note: Runs were made under IO Column conditions only. The 20 Column capacity may differ slightly from that shown because of its 3-fold greater aqueous-to-organic flow ratio.

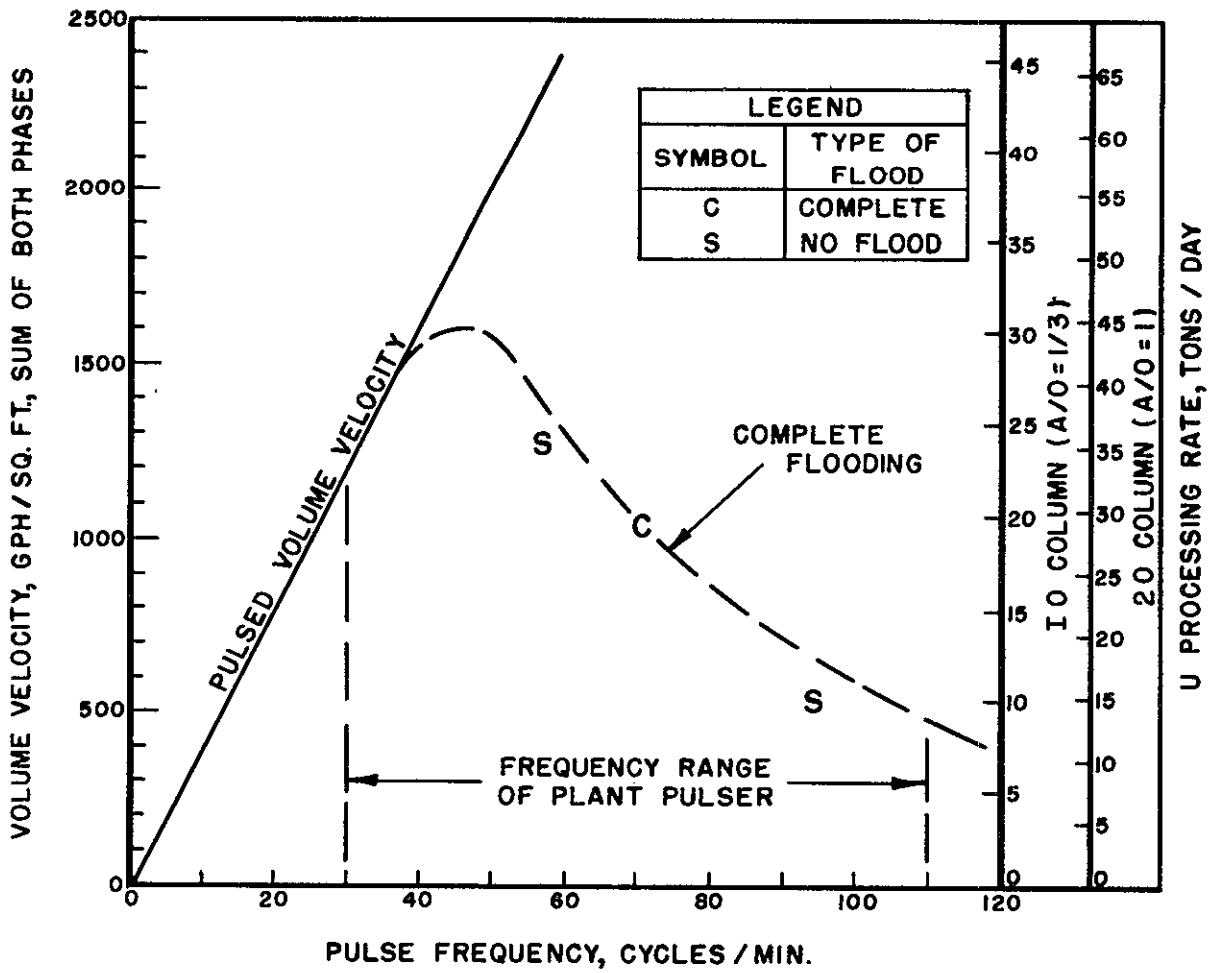

PART II: PROCESS, continued

CHAPTER VI. SOLVENT-EXTRACTION PROCEDURE

CONTENTS Page

A. FLOW DIAGRAMS 602

B. NORMAL PROCEDURE 602

1. Co-Decontamination Cycle 603
2. Partition Cycle 604
3. Final Uranium Decontamination Cycle 606
4. Final Plutonium Decontamination Cycle 607

C. ALTERNATIVE FLOW SCHEMES 609

1. Bypassing of Decontamination Cycles 609
2. Backcycling of No. 2 Acid Concentrator Bottoms 609
3. Reflux Operation of Final Plutonium Cycle 610

D. START-UP AND SHUTDOWN 610

1. Start-Up 610
2. Shutdown 612

E. DETECTION AND REMEDY OF OFF-STANDARD CONDITIONS 612

1. Methods of Detection of Off-Standard Conditions 612
2. Flooding 613
3. Emulsion 614
4. Excessive Entrainment 615
5. Excessive Uranium or Plutonium Losses 615
6. Inadequate Product Decontamination 616
7. Specific Off-Standard Conditions 616

F. REWORK OF OFF-STANDARD PROCESS STREAMS 616

1. Off-Standard Salt Wastes 617
2. Off-Standard Uranium Product 617
3. Off-Standard Plutonium Product 617
4. Off-Standard Intermediate-Cycle Product Streams 618

LIST OF TABLES AND FIGURES 618

CHAPTER VI. SOLVENT-EXTRACTION PROCEDURE

In this chapter flow diagrams of the solvent-extraction column batteries, along with outlines of the operating procedures, are presented. Main emphasis is on the normal procedures for steady-state operation, start-ups, and shutdowns. Brief discussions of alternative possible flow schemes and of off-standard conditions and methods of their detection and remedy are also presented. Detailed specification of operating procedures is beyond the scope of the chapter.

A. FLOW DIAGRAMS

Process flow diagrams of the solvent-extraction column battery are presented in Figures VI-1, VI-2, VI-3, and VI-4. These diagrams schematically show the process streams and equipment for the Co-Decontamination Cycle, Partition Cycle, Final Uranium Decontamination Cycle, and Final Plutonium Decontamination Cycle.

The basis for the material balance and heating or cooling requirements is an instantaneous processing rate of 10 short tons of uranium per day under Purex HW #3 Chemical Flowsheet conditions. Tank volumes as shown are the approximate volumes to overflow; consequently, the maximum working volumes would be about 80% of the volumes given.

Because of the schematic nature of the diagrams, details of the equipment are not given. The reader should refer to Chapters XI through XVI (Plant and Equipment) and Chapter XVII (Instrumentation) for the mechanical and physical details of the facilities.

B. NORMAL PROCEDURE

The compositions and flow rates as tabulated in the material balance blocks of Figures VI-1, VI-2, VI-3, and VI-4 are based on HW #3 Flowsheet at a throughput of 10 tons of uranium per day. While, as discussed in Chapter I, all engineered process equipment for the Purex Plant was sized for near-optimum performance at approximately 10 tons of uranium per day, "cold" pilot-plant studies prior to plant start-up have indicated that the Purex Plant solvent-extraction battery can be operated, at HW #3 Flowsheet conditions, at instantaneous processing rates ranging from as low as approximately 3 tons per day to as high as approximately 16 tons per day without exceeding equipment capacities or sustaining excessive waste losses.

Modifications of the flowsheet such as employing the reflux 2A-2B alternative flowsheet, bypassing of cycles, and waste backcycling are possible and will be discussed later in this chapter.

1. Co-Decontamination Cycle

1.1 General

The purpose of the Co-Decontamination Cycle (Figure VI-1) is two-fold, as follows: (a) removal of the gross fission-product contamination, and (b) concentration of the aqueous product stream to a density suitable for adjusting to IAF (metal feed solution for the partition cycle) specifications.

The expected decontamination effected by this cycle for 600 MWD/T material is on the order of 1000-fold, with the feed having 1×10^5 gamma curies, and the product having 1×10^2 gamma curies per ton of uranium processed. These values for radioactivity may vary considerably depending upon (a) irradiation in the piles, (b) "cooling" time, and (c) decontamination effected in dissolution and subsequent head-end treatment, as well as upon (d) the column operating conditions.

The Co-Decontamination Cycle consists of two liquid-liquid solvent-extraction columns (HA and HC Columns) and one evaporator (HCP Concentrator). The equipment is designed to handle 7,500 gallons of HAF per day, which contains 10 tons of uranium and 5.4 kilograms of plutonium (600 MWD/T basis).

1.2 Steady-state operation

The uranium and plutonium-bearing feed (HAF) is pumped to the center feed point of the HA Column, where it mixes with the combined scrub streams to form the continuous phase.

The scrub consists of two streams, one of which (HAS) consists of water, fed to the top feed point of the column from the Demineralized Water Header. The second scrub stream (HAIS), which contains all the nitric acid needed for achieving the desired removal of fission products from the organic phase, is fed from the Demineralized Water Header and the Recovered Nitric Acid Header to a feed point midway in the scrub section. The two scrub streams mix together and form a homogeneous phase.

The organic extractant (HAX) is pumped from the Organic Header #1 into the column through the bottom feed point. The organic, which forms the dispersed phase, rises in small droplets through the HAF-HAS-HAIS blend and extracts the uranium, plutonium, and some nitric acid and fission products. On continuing to rise, it passes the mid-feed (HAF) point, and enters the lower half of the scrub section, where it comes in contact with the blended scrub streams. The scrub blend removes most of the fission products and some uranium and plutonium. When the organic passes the intermediate scrub feed point, it enters the top half of the scrub section and is contacted with the water scrub. Almost all of the nitric acid in the organic phase is removed, along with some fission products, uranium, and plutonium. (Nitric acid removal from the organic phase is desirable because the acid concentration is thereby lowered in the HCP Evaporator, alleviating corrosion there.) The organic then enters the disengagement section where the aqueous-organic interface is located

and separation of the phases is effected. The organic (now the product-bearing stream) then overflows to the bottom feed point of the HC Column, where it forms the continuous phase.

The aqueous stream leaving the HA Column (HAW), bearing the bulk of the fission products, and less than 0.2% of the plutonium or uranium originally charged to the dissolver, flows by gravity out of the bottom of the HA Column to the acid-recovery facilities in F Cell. (See Chapter X for a discussion of acid recovery and waste treatment.)

In the HC Column, the aqueous extractant (HCX) fed from the Demineralized Water Header and Fresh Nitric Acid Header is the dispersed phase and passes down through the organic. The aqueous extracts the uranium, plutonium, and approximately two thirds of the fission products that were carried to the HC Column in the organic phase. After passage through the column, the aqueous stream (now HCP) enters the bottom disengagement section where the aqueous-organic interface is located and separation and de-entrainment of the phases is effected. The aqueous HCP is jetted to the tower section of the concentrator for removal of TBP by steam stripping. From the bottom of the tower, it flows into the vertical-tube boiler where it is concentrated to 3.08 pounds of uranium per gallon (1.55 M U).

The organic, containing less than 0.2% of the uranium and less than 0.2% of the plutonium that was charged to the dissolver, overflows from the column to the Organic Waste Header and then to G Cell for decontamination and reuse as extractant.

Stream flows to and from the columns can be controlled in three ways: (a) by manual control (used for start-up and emergencies), in which each flow instrument is attended individually and corrections are made by manually resetting the air loading to the control valves; (b) by individual automatic control, in which each flow is controlled at a specified rate by a recording-controlling instrument; or (c) by master-stream flow control, in which the flow rate of the HAF controls proportionally the HAW, HAX, and HCX flows. In cases (b) and (c) the HA interface level controls the rate of HAS flow, and the HC interface level controls the rate of HCP flow.

2. Partition Cycle

2.1 General

The purpose of the Partition Cycle (Figure VI-2) is three-fold, as follows: (a) further removal of fission-product contamination; (b) separation of plutonium from uranium; and (c) concentration of the aqueous uranium product stream to a density suitable for adjusting to 2DF (uranium solution feed for the Final Uranium Decontamination Cycle) specifications. The expected decontamination (for 600 MWD/T material) is on the order of 200-fold, leaving about five tenths of a gamma curie per ton of uranium processed split between the two product streams (IBP and ICU).

The separation of plutonium from uranium, an important function of this cycle, is accomplished by means of four columns and one blend tank. Two of the columns (IA and IC) are similar to the HA and HC Columns in both design

and function (with the exception that the IA has only one scrub stream). The other two columns, IB Extraction and IB Scrub, perform the functions of extracting plutonium into the aqueous phase and scrubbing residual quantities of uranium from the plutonium stream, respectively. Uranium favors the organic phase in the IB Column system. Due to cell depth limitations in the Purex Plant, it was necessary to split the IB Column into two sections and interrupt a direct cascade from the IA Column. For this purpose, a pump tank is used. The IB Pump Tank (TK-J3) blends the overhead organic phases from IA, IB Scrub, and 2B Columns to form the IB Extraction Column feed (IBXF).

2.2 Steady-state operation

The operation of the IA Column is a duplication of the HA Column except for three items: (a) the IAP overflows to the IB Pump Tank TK-J3 instead of overflowing to a column; (b) the gamma curies in the feed per ton of uranium are 100 instead of 1×10^5; (c) the IA Column is operated with only one scrub stream which enters at the top feed point. A dual scrub is not employed since a low nitric acid concentration in the IAP adversely affects the efficiency of uranium scrubbing in the IB Scrub Column, and the acid removal desirable for ICU Concentrator corrosion protection is achieved in the IB Extraction Column.

The IB Pump Tank (TK-J3) continuously receives IAP (overflow from the IA Column), IBSU (organic overflow from the IB Scrub Column), and 2BW (organic waste stream from the Final Plutonium Decontamination Cycle), and pumps the blended mixture (IBXF) to the bottom feed point of the IB Extraction Column. The IBXF becomes the dispersed phase and rises through an aqueous solution of nitric acid and ferrous sulfamate (IBX). The IBX is fed to the column at the top feed distributor.

The ferrous sulfamate contained in the IBX reduces plutonium to the trivalent state. In this valence form plutonium highly favors the aqueous phase. The distribution ratio for uranium is not affected by the reductant; consequently, the greater percentage of uranium remains in the organic. The organic overflows to the IC Column, where it forms the continuous phase.

The aqueous phase (IBXP), bearing over 99% of the plutonium charged to the dissolver and about 0.12 pounds of uranium per gallon, flows by gravity from the bottom of the IB Extraction Column to the top of the IB Scrub Column and forms the continuous phase.

In the IB Scrub Column, this solution is contacted with a fresh organic phase (IBS) which is fed to the column from Organic Header #1. As the IBS rises through the aqueous solution, it extracts the uranium, leaving only a residual amount in the plutonium-bearing aqueous effluent (approximately 1×10^{-5}% of the uranium in the IAF). The organic continues to rise to the disengagement section, where the liquid-liquid interface is located and phase disengagement occurs. The organic then overflows to the IB Pump Tank where it is blended with the IAP and 2BW. The aqueous phase (IBP) flows by gravity from the bottom of the IB Scrub Column to the 2AF Make-Up Tank (TK-J5) where it is adjusted with nitric acid and sodium nitrite into 2AF (feed for the Final Plutonium Decontamination Cycle).

The IC Column's operation is a duplication of the HC Column, except for the following: (a) only residual plutonium is present (approximately 0.2% or less of the plutonium originally charged to the dissolver); (b) the gamma curies in the feed (ICF) per ton of uranium processed are approximately 0.2 instead of 100 as in the HCF, and (c) the L/V (aqueous-volume-to-organic-volume ratio) is 1.47 for the IC Column, as compared to 1.76 for the HC Column.

The ICU is jetted to the ICU Concentrator (E-J8-1), steam stripped for TBP removal, and evaporated to 3.22 pounds of uranium per gallon (1.62 M U). The concentrated stream is then routed to the 2DF Feed Tank (TK-K1) for adjustment to 2DF composition.

The general methods of control of stream flows are similar to the Co-Decontamination Cycle. However, the master flow-control system has two master streams, the IAF and the IBXF. The IAF stream proportionally controls the IAW stream, IAX stream, the sodium nitrite butt, and nitric acid butt to TK-J1 (IA Feed Tank). The IBXF stream proportionally controls the IBS, IBXP, ICX streams, and the $NaNO_2$ butt to the ICU Concentrator. The IA, IBX, IBS, and IC Column interface levels control the IAS, IBX, IBP, and ICU streams, respectively.

2.3 Rates greater than 13 tons U/day

The specified flow ratios as given on Figure VI-2 are suitable for plant production rates up to 13 tons U/day. However, "cold" Purex prototype column tests have indicated that at production rates in excess of 13 tons U/day a substantial reduction in the IBS:IBSF flow ratio will be required to insure stable operation of the IB Scrub Column; e.g., an approximately two-fold reduction from the flowsheet ratio at production rates of 16 to 20 tons U/day. The prototype tests indicated adequate decontamination of the IBP stream from uranium with the reduced IBS:IBSF flow ratio.

Any decrease in the IBS:IBSF flow ratio results in an increased IB Extraction Column feed density. This increase in IB Extraction Column feed density results in a decrease in the density difference between the phases in the column, which would limit capacity further due to emulsion formation and flooding.

To alleviate this condition at high production rates, it may be necessary to increase the IAX flow, or to add continuously a stream of organic extractant into the IB Pump Tank in order to achieve the proper feed density for good IB Extraction Column operation. Pipeline routings for providing this latter stream are available, but additional jumpers and flow-control instruments would be required.

3. Final Uranium Decontamination Cycle

3.1 General

The main objective of the Final Uranium Decontamination Cycle (Figure VI-3) is to prepare, from the partially decontaminated feed solution (2DF), an aqueous uranium product stream (2EU) that can be converted to uranium trioxide which will meet the following specifications:

Gamma activity	1.66×10^{-8} absolute curies/g. U (100% of natural uranium gamma)
Plutonium	< 10 parts per billion parts of uranium
Uranium	80.7% (minimum)
Volatile impurities:	
Phosphorous	< 100 p.p.m. of uranium
Silicon	< 100 p.p.m. of uranium
Sulfur	< 100 p.p.m. of uranium
Molybdenum	< 10 p.p.m. of uranium
Total metallic impurities	250 p.p.m. of uranium

Attainment of a solution that is satisfactory to make an oxide of these specifications is accomplished in a battery of two columns and one concentrator that are similar in design and operating performance to the Co-Decontamination Cycle. Main differences are: (a) only a residual amount of Pu remains, and (b) the gamma curies in the feed are only 0.2 per ton of uranium.

3.2 Steady-state operation

The steady-state operating procedure for the Final Uranium Decontamination Cycle is similar to that of the Co-Decontamination Cycle and is not included for discussion. There are several chemical differences in the operation of this cycle, however, that serve specific purposes. These include (a) the addition of ferrous sulfamate to the 2DF for the purpose of removing trace quantities of plutonium in the extracted uranium, (b) the use of fresh nitric acid to make up the 2DS, and (c) the organic (2DX) is taken from the No. 2 header, which supplies organic solution that has not been in contact with either HAF or IAF. These chemical differences are intended for uranium-product quality control through the elimination of plutonium and minimum introduction of foreign ions and radioactivity to the decontamination cycle.

4. Final Plutonium Decontamination Cycle

4.1 General

The production of a final plutonium stream that meets the specifications given in the table below is the function of the Final Plutonium Decontamination Cycle (Figure VI-4).

Plutonium	75 g./l.
Beta plus gamma radioactivity from fission products	8×10^{-5} absolute curies/g. of Pu
Uranium	< 1% (Pu basis); but preferably < 0.1% (Pu basis)

Attainment of the above specifications is accomplished by oxidizing the plutonium in the IBP stream to the tetravalent state, and then processing in two countercurrent liquid-liquid extraction columns (2A-2B). These columns operate in a manner similar to the Co-Decontamination Cycle. The aqueous product from the column is concentrated to 75 grams of plutonium per liter and shipped to Building 234-5 for further processing.

The concentration and preparation for shipment of the plutonium product solution is discussed in Chapter VII.

4.2 Steady-state operation

Nitric acid and sodium nitrite are added to the IBP solution collected in TK-J5 to oxidize the plutonium from the +3 to the +4 valence state. The +4 valence state is necessary in order to effect extraction into the organic phase. The plutonium solution is pumped to the mid-feed point of the 2A Column. In the column, the feed mixes with the scrub stream (2AS), which is fed from TK-211 or 212 to the top of the scrub section. The mixture (2AF and 2AS) forms the discontinuous phase. The organic phase (2AX) is fed from the Organic Header #1 to the bottom of the 2A Column and forms the continuous phase. As the organic rises, it extracts the plutonium and a small amount of fission products from the 2AF-2AS blend. On continuing to rise, the organic passes into the scrub section where the fission products are removed. From the scrub section, it rises into the disengagement section for de-entrainment. The plutonium-bearing organic then overflows the 2A Column by gravity to the bottom of the 2B Column, where it becomes the dispersed phase. The aqueous waste (2AW) flows to the Acid Accumulator Tank (TK-F10).

The organic in the 2B Column rises through the continuous aqueous phase, which extracts the plutonium and then enters the disengagement section where the interface is located. After separation of the phases is accomplished, the organic (2BW) overflows to the IB Pump Tank (TK-J3) and is blended with the IAP and IBSU. In this manner, the organic waste stream from the second plutonium cycle is routinely reworked, minimizing plutonium losses.

The 2BP (aqueous plutonium product stream) flows by gravity from the bottom of the 2B Column to the Plutonium Stripper (T-L3), where dissolved or small amounts of entrained organic are removed. The stripped product flows to the plutonium concentrators and is transferred to shipping containers. These final processing steps of stripping, concentration, and transfer to the P.R. Cans are discussed in Chapter VII.

Flow control for the second plutonium cycle is accomplished in a manner similar to that described for the Co-Decontamination Cycle. Flows may be controlled by: (a) manual control, (b) individual, automatic-instrument control, and (c) master-stream flow control.

In the master control system, the flow rate of the 2AF stream is controlled by the weight-factor instrument on the 2AF Tank (TK-J5), which in turn proportionately controls the nitric acid and sodium nitrite addition

streams to TK-J5, the 2AX rate, the 2BP rate, and the 2AS rate. The flow rates of the 2AW and 2BX streams are controlled by the interface levels of their respective columns.

C. ALTERNATIVE FLOW SCHEMES

Certain piping provisions have been made in the design of the Purex Plant which will permit the use of alternative flow schemes which are depicted in HW #3 Flowsheet. Generally, these available alternative routings are intended to provide for potential future process improvements.

1. Bypassing of Decontamination Cycles

Three decontamination cycles have been provided in the Purex Plant to ensure adequate purity of uranium and plutonium. It may be possible, however, to achieve adequate uranium or plutonium decontamination by the use of only two cycles, particularly if a head-end dissolver-solution scavenging and/or a silica-gel end-product treatment step is employed. Piping in concrete has been provided for additional pre-treatment of dissolver solution, and space has been allowed adjacent to the uranium-product-solution storage area for future installation of silica-gel treatment facilities.

The bypassing of decontamination cycles may be accomplished by several methods as follows:

(a) The HA-HC Column cycle may be bypassed by pumping the HA Column feed (HAF) to the IA Column feed tank via the HC Column product (HCP) concentrator, which would not be in operation.

(b) The HC and IA Columns may be bypassed by overflowing the HA Column product stream (HAP) to the IBX Column feed tank (IB Pump Tank). In effect, this method accomplishes the same end as bypassing the HA-HC Column cycle, except that it is not necessary to route flows through the HCP Concentrator.

(c) The 2D and 2E Columns may be bypassed by transferring the concentrated IC Column product from the 2D Column feed tank directly to the final uranium product sample tank (2EU Sample Tank).

2. Backcycling of No. 2 Acid Concentrator Bottoms

Pipe routings and treatment facilities have been provided in the Purex Plant which will allow the acidic bottoms from the No. 2 Acid Concentrator to be returned to either the dissolvers or the Co-Decontamination Cycle feed make-up tank instead of being sent to the No. 1 Acid Concentrator. Since the No. 2 Acid Concentrator will normally evaporate waste from the IA, 2D, and 2A Columns, reprocessing of these concentrator bottoms through solvent extraction would result in a small plant yield improvement.

Before this acidic waste is reintroduced to the solvent-extraction columns, it is treated to effect complete hydrolysis of TBP decomposition products; otherwise, increased Co-Decontamination Cycle waste losses may result. The treatment step is discussed in Chapter X.

3. Reflux Operation of Final Plutonium Cycle

In the reflux method of operation for the Final Plutonium Decontamination Cycle, approximately 96 per cent by volume of the final plutonium product stream (2BP) is returned to the top of the 2A Column. The plutonium concentration throughout the extraction cycle is thereby increased to such a degree that a concentration step for the 2BP stream is no longer necessary. Some additional decontamination benefits may also be realized by the reflux flowsheet. The possibility of increased waste losses exists in this type of operation due to the increased concentration of plutonium in the 2A and 2B Columns. Normal pipe routings already provide for the routine recovery of plutonium in the 2BW stream via the IB Pump Tank (IBXF). Piping in concrete exists for routing 2AW into the plutonium concentration cell and out of this cell to the IA Column feed tank. This piping may be utilized for the routine recovery of plutonium in 2AW following a concentration step performed in either new or existing plutonium-concentration equipment. The design of the 2A and 2B Columns which provides for safe geometries allows column operation under reflux conditions without risk of nuclear interaction. The design of the 2A Feed Tank would require revision, however, in the event that the reflux flowsheet were adopted, since the existing tank would not be nuclearly safe if the concentrated contents of 2A Column were syphoned back into the vessel.

D. START-UP AND SHUTDOWN

The following discussion is confined to indication of some general principles involved in start-up and shutdown of the solvent-extraction battery. Since the process status preceding start-up or shutdown may vary widely, the choice of specific procedures must be made at such instance of plant start-up or shutdown.

1. Start-Up

1.1 Maximum start-up rate

Even though it has been shown in the pilot plant that the columns may be capable of processing as much as 20 tons U/day, it is inadvisable to attempt a start-up at rates greater than 10 tons U/day. Once the columns are operating steadily at 10 tons U/day, the rates may be raised gradually to the desired tonnage. Attempting to start the columns at too high a rate may result in flooding, loss of interface control, or large volumes of off-standard products.

1.2 Establishment of an aqueous seal

The first condition that must be established in the columns is the formation of an aqueous seal (preferably with a "cold" process solution).

The purpose of the seal is to prevent trapping of any organic phase (subsequently introduced) in the bottom effluent lines which normally handle aqueous phase on all columns.

1.3 Establishment of "cold" flows

Once the seals have been established, the "cold" stream flows within each extraction cycle may be started. Coincident with starting the discontinuous phase to a column, the pulsers should be started in order to provide the necessary agitation to move the discontinuous phase through the plate perforations.

As the "cold" streams are started and the rates adjusted to the desired flow, the interfaces should be located in the desired position and may be placed on automatic control.

Operation with "cold" streams is normally continued until all the columns are operating smoothly.

1.4 Steam for stripping in the concentrator

While the "cold" streams are being started, water is evaporated in the concentrator to provide steam in the stripping section for removal of entrained TBP and hydrocarbon in the product streams.

1.5 Introduction of metal feed streams

The uranium and plutonium-bearing streams are only started after:

(a) All columns are running smoothly on "cold" streams.

(b) Water is being evaporated in the concentrator.

The uranium and plutonium feed streams are started slowly and gradually brought up to the desired rates. While the columns are reaching steady-state operating conditions, readjustments of the interface controllers are being made. This is necessary, since the specific gravities of the solutions change due to the introduction of the uranium.

Fission-product contamination in the uranium and plutonium product streams may be excessive for the first few hours after the "hot" uranium feed stream has been introduced until the uranium concentration in the HA, IA, and 2D scrub sections has reached or approached the degree of saturation specified in the flowsheet. Provision has been made for reworking this off-standard product material, as indicated in Section F of this chapter. An alternative procedure to rework the initial product streams would be to establish steady-state operation in the column battery by using "cold" uranium from the 2EU receiver or sampling tanks (TK-K5 or TK-K6) to make up the HAF for the first few hours of operation.

2. Shutdown

The shutting down of the solvent-extraction columns employs principles which in essence are a reversal of the start-up considerations. The uranium and plutonium-bearing stream is shut off first. This is followed by a "stripping" period and subsequent shutting off of the "cold" streams and pulsers.

During the "stripping" period, the "cold" streams are permitted to flow for several minutes to remove the greater percentage of the products in the column contents. A usually adequate stripping time is twice the column volume (gallons) divided by the extractant rate (gallons per minute). The products resulting from this stripping procedure may contain excessive fission-product contamination, resulting from the decreased degree of uranium concentration in the A-type column scrub sections. This material can be isolated and returned for rework as indicated in Section F.

E. DETECTION AND REMEDY OF OFF-STANDARD CONDITIONS

Off-standard conditions, which may develop during the operation of the solvent-extraction batteries, are those processing circumstances which result in excessive waste losses and/or inadequate decontamination of the uranium and plutonium products. The over-all plant yield as defined by the chemical flowsheet is expected to be better than 98 per cent for both uranium and plutonium on a sustained operating basis. Specifications for fission-product and impurity content in the respective final products are tabulated under B3.1 and B4.1. These specifications reflect the quality of the uranium and plutonium products obtained from separations plants in operation before the Purex Plant was placed in service. The Purex process is expected at least to equal the product quality established by these specifications.

The purpose of this section is to discuss generally the detection and remedy of off-standard conditions occurring in the solvent-extraction equipment with particular emphasis being placed on the value of certain instruments as an aid in interpreting abnormal column operation. A more detailed tabulation of these off-standard conditions, their common symptoms, and possible remedies is presented in Tables VI-1 to VI-4.

1. Methods of Detection of Off-Standard Conditions

Controlled operation of the solvent-extraction columns is accomplished by means of four general types of instruments, as follows:

(a) The recording-controlling electronic rotameters which establish the flow rates of the various feed streams to all columns.

(b) The air-purge instruments which record the static liquid head (weight factor) on all columns. The difference in static liquid head is also determined by air-purge devices for measuring specific gravity on certain column effluents and controlling the interface position on all columns, except the 2A Column. Interface control on 2A Column is maintained by means of an electrical capacitance-measuring device. In general, specific gravity is determined on

all column effluent streams which contain large quantities of uranium, for example, the organic effluent from the HA Column (HAP) and the aqueous stream from the HC Column (HCP).

(c) The gamma scintillation counters located on the dilute plutonium stream from the 2B Column and the concentrated uranium product from the 2EU Concentrator. These instruments monitor the residual radioactivity present in a continuously withdrawn sample of the product streams from the final plutonium and uranium decontamination cycles and indicate off-standard trends in over-all plant decontamination performance. Another radiation detection device which utilizes an ionization chamber is also used to scan large equipment pieces and detect gross accumulation of radioactivity. Ionization chambers are located near all the uranium concentrators and will detect abnormal fission-product buildup caused by a decline in decontamination performance of the previous solvent-extraction cycle.

(d) The samplers, which permit analysis of the process solutions by the control laboratory, or by in-line analytical instruments to be installed at a later date in strategic locations where continuous monitoring is desirable for process control and/or economy.

Under normal operating conditions, at a given processing rate, the instrumentation will indicate that almost constant physical and chemical conditions exist in the process. While a single instrument may indicate a trend toward abnormality, it usually takes proper interpretation of the data gathered from several related sources to determine the specific off-standard condition that has developed.

2. Flooding

Whenever the holdup of the discontinuous phase in a solvent-extraction-column plate section increases to a value which interferes with free countercurrent phase flow, the conditions for a flood have been established. If the approach to a flooding condition is made gradually, the dispersed phase build-up will be localized, and, depending on flow conditions, may tend to disperse and re-form as a cyclic local flood. Complete flooding, caused by aggravation and growth of a local flood, is characterized by either the aqueous or the organic phase leaving the column at the end at which it entered. Development of a flooding condition within a solvent-extraction column, depending on degree, lowers its performance efficiency. As a consequence, increased losses of uranium, plutonium, or extractant (TBP), or an increase in fission-product content of the respective metal products is apt to result, depending on the type of column involved.

In those columns which operate with the aqueous phase continuous, the static pressure will decrease as the organic holdup within the column increases. An increased holdup of organic phase will also tend to raise the interface position and may be indicated on the interface instrument. Since the interface instrument controls the scrub addition rate on the A-type columns, an increase in organic holdup may also become apparent

through a reduction in flow of HAS, IAS, and 2DS. In the IBX and 2B Columns, the respective extractant flows would similarly be decreased; and the IBP flow rate would increase from the IBS Column.

For the columns in which the organic phase is continuous, the reverse of the above instrument behavior is generally true. An increase in the aqueous holdup in these columns will be reflected by an increase in static pressure, falling interface, and decreased flow of HCP, ICU, 2EW, and 2AW.

Generally, a flooded column is returned to normal operation by reducing influent stream rates and/or the pulse frequency.

3. Emulsion

Excessive emulsification in the plate or packed section of a pulse column at otherwise favorable operating conditions may result from the presence of excessive concentrations of TBP hydrolysis products (DBP and MBP) or some types of siliceous and other foreign materials ("crud"), and is often accompanied by a foaming and improper phase disengagement in the column disengaging sections, particularly at the interface end.

Severe emulsification in the column plate or packed section results in partial coalescence of the dispersed phase and may impair decontamination and cause increased and fluctuating uranium and plutonium losses. The instrument indications and consequences of a severely emulsified condition in a column plate or packed section are similar to those of local flooding. Distinguishing between a flooded and an emulsified condition may require observation and interpretation of equipment performance over a period of several hours, including the procurement of special samples. Severe emulsification in a column plate or packed section is usually remedied in the same manner as a flooding condition, viz., by reducing flow rates and/or the pulse frequency.

A foaming or emulsified condition in a disengaging section may usually be detected by (a) an increase in the apparent specific gravity of the organic phase just above the interface, (b) a decrease in the apparent specific gravity of the aqueous phase below the interface, or (c) erratic behavior of the interface-control system. An emulsion in a column disengagement section often has its counterpart in the plate section and is thus often accompanied by column operating instability and malperformance. Since emulsion formation in a disengagement section is generally a consequence of the presence of impurities, such as siliceous material, DBP, and dirt accumulations, the condition may usually be remedied by jetting a volume of the interface zone to the Utility Tank (TK-F13). All large A-type columns including the IB Extraction Column have interface jets installed. If the emulsified condition is not remedied by jetting out the impurities, a shutdown and flush of the system may be necessary in order to overcome the difficulty. A general consequence of disengagement-section emulsification is excessive entrainment of the wrong phase, which may have deleterious effects on the process as discussed below.

4. Excessive Entrainment

During normal column operation some entrainment of aqueous in the organic, and vice versa, is always occurring. Entrainment of the order of 0.01 to 0.1 per cent by volume of the opposite phase may be considered as normal. Phase emulsification in a disengagement section always leads to increased entrainment, and, depending on the type of column involved, may produce any of several undesirable results. In the A-type columns, entrainment of aqueous in the overflowing organic phase generally is detected by a decline in the decontamination performance for the extraction cycle involved, since the aqueous particles are usually associated with dirt and adsorbed fission products. Organic entrainment in the aqueous phase, such as that which could occur in the bottom section of a C-type column, results in a solvent loss, which is of economic importance due to the high cost of TBP. In addition, introduction of excessive quantities of solvent to the intercycle concentrators, or final concentrators, may result in inadequate removal in the steam stripping sections. Insufficient removal of solvent from the aqueous feed to the concentrators may cause a buildup of TBP hydrolysis products to be formed in the concentrated solutions, and, in the case of the Final Uranium Cycle product, may cause severe foaming during the calcination process. Also, as discussed in Chapter VII, prevention of organic-phase entry into the concentrators provides a desirable added safety factor against a possible rapid nitration of TBP.

5. Excessive Uranium or Plutonium Losses

Excessive uranium or plutonium losses are generally detected by one or both of the following methods:

(a) Routine sampling.

(b) Static-pressure and specific-gravity readings (for uranium only).

When uranium losses are only slightly higher than normal or when excessive plutonium losses unaccompanied by high uranium losses are involved, the specific-gravity and static-pressure instruments will not give any positive indications of this condition. It is, therefore, necessary to rely on routine sample analysis to reveal these losses. Once a loss is confirmed, a check of the controlled flows and operating conditions around the offending column will usually locate the off-standard condition.

If uranium losses are very high, the static-pressure and specific-gravity instruments will show a marked change. The high uranium loss will cause the static pressure to increase in the HA, HC, IA, IBS, 2D, and 2E Columns. The change in the specific gravity of the uranium-bearing effluent stream will depend on the cause of the high loss. For example, if the loss is caused by improper pulsing conditions (poor column efficiency), the uranium-bearing-effluent specific gravity will decrease; if the loss is caused by insufficient extractant flow, the specific gravity of that stream will increase.

Assuming the column pulsing conditions are correct, the most likely causes for high waste losses are improper flow ratios and/or non-flowsheet stream composition. These conditions may generally be detected by making a material balance around the off-standard column.

6. Inadequate Product Decontamination

Inadequate decontamination of the uranium and plutonium products during and after solvent extraction may be detected by the Beckman radiation recorders which are located near each uranium concentrator, the Plutonium Product Receiver, and both plutonium sample tanks. An abnormally high reading after any of the solvent-extraction cycles is an indication that an off-standard condition exists, and a check is made back through the column-battery instrumentation to interpret the high reading. Residual fission-product activity in the final uranium and plutonium streams is monitored by gamma scintillation counters. These monitors may be operated continuously by recirculating the streams through their respective samplers in the sample gallery.

Poor decontamination without coincident column flooding or emulsion may be caused by low aqueous-to-organic flow ratios in the scrub sections of the A-type columns.

7. Specific Off-Standard Conditions

The diagnosis of off-standard conditions in the operation of the solvent-extraction columns from available instrument indications and analytical reports and the choice of appropriate remedial measures is often a complex matter requiring expert understanding and consideration of many facets of the technology of the solvent-extraction battery, for which no summary within the scope of a technical manual can be substituted. However, Tables VI-1 to VI-4, listing potential off-standard conditions in the solvent-extraction battery and their likely causes and possible remedies, may be of value in suggesting potentially fruitful approaches for consideration. Table VI-1 is a synopsis of the principal possible off-standard conditions and may be used as an index to the more detailed tabulations for the several solvent-extraction cycles in Tables VI-2 to VI-4.

F. REWORK OF OFF-STANDARD PROCESS STREAMS

Any required rework of off-standard process streams in the Purex Plant will normally involve one of the following three streams:

(a) The concentrated salt waste -- to recover excessive uranium and/or plutonium losses.

(b) The final uranium product stream (2EU) -- to decontaminate the uranium from excessive plutonium, fission-product, or non-radioactive contaminant content.

(c) The final plutonium product stream (2BP) -- to decontaminate the plutonium from an excessive uranium and/or fission-product content.

In very unusual cases, off-standard intermediate uranium or plutonium-bearing solutions may be reworked as discussed in Subsection F4.

Methods available for reworking these off-standard streams are discussed in this section. For a schematic layout of the rework piping, reference is made to Chapter XI. The choice of a specific method of rework, and, indeed, a decision to rework is arrived at in each individual case on the basis of a number of factors. The effect of off-standard uranium or plutonium product compositions upon subsequent processing (in the case of product streams) or the value of the uranium or plutonium recoverable by rework (in the case of waste streams) is weighed against the cost of reprocessing in each instance.

1. Off-Standard Salt Wastes

The salt wastes are primarily the concentrated salts of the pooled A-type column waste streams after the nitric acid recovery step. Also included with the pooled aqueous wastes are the following streams:

(a) Condensate from the Plutonium Concentrator Condenser (E-L8).

(b) Steam-chest condensate from the plutonium concentration equipment (T-L3, E-L4, E-L7).

(c) Empty-outs from the No. 1 and No. 2 Pu Concentrators (E-L4, E-L7).

(d) Empty-outs from the HA, IA, 2A, and 2D Columns.

(e) Laboratory wastes.

(f) Contaminated IOW and 20W from TK-R8 and TK-G8.

(g) Wastes from the Cell Drain Collection Tank.

Plutonium and uranium in excessive concentrations are detected in the Waste Concentrate Sample Tank just prior to neutralization. If rework is considered necessary, the material is jetted to the Waste Rework Tank (TK-F8) for storage, then to any of the dissolvers or to the Centrifuge Feed Tank for nitric acid adjustment and subsequent reprocessing through the head-end and solvent-extraction steps.

2. Off-Standard Uranium Product

Rework lines are available for reprocessing any 2EU that does not meet product specifications because of insufficient decontamination or of excessive metal-ion contamination (corrosion products, Pu, Al, Na, etc.). The material to be reworked can be routed from the 2EU Sample Tank to the HAF Make-Up Tank or any intermediate uranium-cycle feed tank, as required by the type and degree of purification needed.

3. Off-Standard Plutonium Product

Any off-specification plutonium product requiring additional purification can be drawn from the Plutonium Product Sampler Tanks (TK-L9 and TK-L10) into the Vacuum Tank (TK-L11) and routed to the HAF Make-Up Tank (TK-E6) for reprocessing in the solvent-extraction cycles.

4. Off-Standard Intermediate-Cycle Product Streams

Piping is provided which allows the product streams from any of the solvent-extraction cycles to be returned for reprocessing in preceding extraction cycles. For example, the HCP can be routed from the IAF Tank (TK-J1) to the HAF Tank (TK-H1), or to the HAF Make-Up Tank (TK-E6) if chemical treatment is required. Similar routings, arranged as indicated in Chapter XI, exist for other intermediate-cycle product streams. These routings are intended primarily to provide for the disposition of process solutions in the event that tanks or equipment must be emptied for maintenance or replacement. Since the most logical routing for process solutions under these circumstances is countercurrent to normal process flow, in order to avoid fission-product contamination of downstream equipment, the routings also provide means for rework. Rework of intermediate-cycle product streams by this method would probably be done only under very unusual conditions of gross failure of any extraction cycle to decontaminate. Normally decontamination rework will involve only off-specification uranium and plutonium products from the final decontamination cycles.

LIST OF TABLES AND FIGURES

TABLE VI-1 SYNOPSIS OF POSSIBLE OFF-STANDARD CONDITIONS

TABLE VI-2 DETECTION AND REMEDY OF OFF-STANDARD CONDITIONS -- CO-DECONTAMINATION CYCLE

TABLE VI-3 DETECTION AND REMEDY OF OFF-STANDARD CONDITIONS -- PARTITION CYCLE

TABLE VI-4 DETECTION AND REMEDY OF OFF-STANDARD CONDITIONS -- FINAL URANIUM AND PLUTONIUM CYCLES

FIGURE VI-1 PROCESS FLOW DIAGRAM -- CO-DECONTAMINATION CYCLE

FIGURE VI-2 PROCESS FLOW DIAGRAM -- PARTITION CYCLE

FIGURE VI-3 PROCESS FLOW DIAGRAM -- FINAL URANIUM CYCLE

FIGURE VI-4 PROCESS FLOW DIAGRAM -- FINAL PLUTONIUM CYCLE

TABLE VI-1

SYNOPSIS OF POSSIBLE OFF-STANDARD CONDITIONS

First Symptom	Likely Cause	Reference
(a) Excess uranium in the concentrated salt wastes.	(1) U from HAW (2) U from IAW (3) U from 2DW	(1) Table VI-2, Item A (2) Table VI-3, Item A (3) Table VI-4, Item A
(b) Excess plutonium in the concentrated salt wastes.	(1) Pu from HAW (2) Pu from IAW (3) Pu from 2AW (4) Pu from 2DW (5) Pu from E-L8 (Pu Concentrator Condenser)	(1) Table VI-2, Item A (2) Table VI-3, Item A (3) Table VI-4, Item F (4) Table VI-4, Item B (5) Chapter VII
(c) Excess fission-product content in the 2EU.	(1) F.P.'s from HAP (2) F.P.'s from IAP (3) F.P.'s from 2DU	(1) Table VI-2, Item B (2) Table VI-3, Item B (3) Table VI-4, Item D
(d) Plutonium in the 2EU.	(1) Pu from IBU (2) Pu from 2DU	(1) Table VI-3, Item D (2) Table VI-4, Item C
(e) Excess fission-product content in the 2BP.	(1) F.P.'s from HAP (2) F.P.'s from IAP (3) F.P.'s from IBP (4) F.P.'s from 2AP	(1) Table VI-4, Item B (2) Table VI-3, Item B (3) Table VI-3, Item B (4) Table VI-4, Item G
(f) Uranium in the 2BP.	(1) U from IBP (2) U from 2AP	(1) Table VI-3, Item C (2) Table VI-4, Item H
(g) Uranium in the IOW	(1) U stripped from HCW (2) U stripped from ICW	(1) Table VI-2, Item C (2) Table VI-3, Item E
(h) Uranium in the 2OW	(1) U stripped from 2EW	(1) Table VI-4, Item E

[redacted]

TABLE VI-2

DETECTION AND REMEDY OF OFF-STANDARD CONDITIONS
CO-DECONTAMINATION CYCLE

Warning! The diagnosis of off-standard conditions in the operation of the solvent-extraction columns from available instrument indications and analytical reports and the choice of appropriate remedial measures is often a complex matter requiring expert understanding and consideration of many facets of the technology of the solvent-extraction battery, for which no summary within the scope of a technical manual can be substituted. This tabulation may be of value in suggesting potentially fruitful approaches for consideration.

Off-Standard Conditions	How Detected	Likely Cause	Detection of Cause	Remedy
A. High uranium or plutonium loss to the HAW.	(1) Routinely by analysis of the combined concentrated aqueous wastes (TK-F15). (2) Specifically by analysis of the HAW line sample. (3) Specifically by increase in the static pressure of the column (indication of high U loss).	(1) Flow rates: (a) Low HAX (high aq./org. flow ratio). (b) High HAF (high aq./org. flow ratio). (c) High HAW (high aq./org. flow ratio). (d) Low HAIS (low salting strength). (2) Stream compositions: (a) Low TBP concentration. (b) High U concentration in HAF. (c) Low acid concentrations (HAIS and HAF). (3) Flooding. (4) Pulse frequency or amplitude off optimum conditions: (a) Frequency (b) Air in pulse leg.	(1) Rates: (a) Flow recorder on HAX; high HAF specific gravity. (b) Flow recorder on HAF (may be cross checked by tank volume readings of TK-H1). (c) Flow recorder on HAW and HAS. (d) Flow recorders on HAIS-H_2O and HAIS-HNO_3. (2) Stream compositions: (a) Instrument specific-gravity readings. (b) Analysis of samples. (3) Flooding: (a) Decrease in static-pressure readings. (b) Interface and/or HAS flow variations. (4) Pulse frequency or amplitude: (a) Frequency count. (b) Flow rate of solution past piston.	(1) Rates: adjust flows to proper ratios. (2) Stream compositions: (a) Butt into specifications; or (b) Adjust flow rates to compensate: (1) If low TBP concentration exists, raise HAX rate. (2) If high U concentration exists in HAF, lower HAF rate or increase HAX rate. (3) Flooding (see text, E2): (a) Decrease flow rates. (b) Adjust frequency. (4) Pulse: (a) Adjust frequency. (b) For no flow past piston, shut down for maintenance.
B. High fission-product content in the HAP (also resulting in high fission-product content in the HCP).	(1) Continuously by Beckman radiation readings near the HCP Concentrator. (2) Specifically by analysis of IAF (TK-J1) for gamma activity.	(1) Flow rates: (a) Low HAS or HAIS rates. (b) Low HAF rate. (c) High HAX rate. (2) Stream compositions: (a) High HNO_3 acid conc. in HAIS. (b) High gamma activity in HAF (due to lack of slug "cooling" time). (3) Flooding. (4) Pulse frequency or amplitude off optimum conditions: (a) Frequency (b) Air in pulse leg.	(1) Rates: (a) Flow recorder on HAIS (H_2O and HNO_3) and HAS. (b) Flow recorder on HAF. (c) Flow recorder on HAX. (2) Stream Composition: (a) Analysis of HAIS. (b) Analysis of HAF for gamma activity. (3) Flooding: (a) Decrease in static-pressure readings. (b) Interface and/or HAS flow variations (4) Pulse frequency or amplitude: (a) Frequency count. (b) Flow rate of solution past piston.	(1) Rates: adjust flows to proper ratios. (2) Stream compositions: (a) Adjust HAIS HNO_3 concentration. (b) If high gamma in HAF, increase HAIS and/or HAS rate. (3) Flooding (see text, E2): (a) Decrease flow rates. (b) Adjust frequency. (4) Pulse: (a) Adjust frequency (b) For no flow past piston, shut down for maintenance.
C. High uranium or plutonium loss to the HCW.	(1) Routinely by analysis of the IOW (includes ICW). (2) Routinely by analysis of wash collection in TK-G8. (3) Specifically by HCW analysis. (4) Specifically by increase in the static pressure of the column (indication of high U loss or flooding).	(1) Low HCX flow rate. (2) Excess HNO_3 in the HCX. (3) Flooding. (4) Pulser amplitude or frequency off optimum conditions. (5) Low temperature HCX.	(1) Flow recorders on HCX-H_2O and HNO_3. (2) Analysis of HCX stream. (3) Flooding: (a) High static-pressure reading. (b) Interface and/or HCP valve loading variations. (4) Pulse frequency or amplitude: (a) Frequency count. (b) Flow rate of solution past piston. (5) Temperature recorder for HCX.	(1) Adjust flow rate of HCX (H_2O and acid). (2) Flooding (see text, E2): (a) Decrease flow rates. (b) Adjust frequency. (3) Pulse: (a) Adjust frequency. (b) For no flow rate past piston, shut down for maintenance. (4) Adjust temperature of HCX to 50°C.

[redacted]

[redacted]

TABLE VI-3

DETECTION AND REMEDY OF OFF-STANDARD CONDITIONS
PARTITION CYCLE

Warning! The diagnosis of off-standard conditions in the operation of the solvent-extraction columns from available instrument indications and analytical reports and the choice of appropriate remedial measures is often a complex matter requiring expert understanding and consideration of many facets of the technology of the solvent-extraction battery, for which no summary within the scope of a technical manual can be substituted. This tabulation may be of value in suggesting potentially fruitful approaches for consideration.

Off-Standard Conditions	How Detected	Likely Cause	Detection of Cause	Remedy
A. High uranium and plutonium losses in the IAW.	← See Table VI-2 Similar to Off-Standard Condition A →			
B. High fission-product content in the IAP: also consecutively in ICU and/or IBP.	(1) Continuously by Beckman radiation readings near the ICP Concentrator. (2) Specifically by analysis of the 2BF (TK-K1) for gamma activity. (3) Specifically by analysis of the IBP (TK-J5) for gamma activity.	← See Table VI-2 Similar to Off-Standard Condition B →		
C. High uranium in the IBP stream.	(1) Analysis of IBP stream for uranium. (2) Very high U in IBP may be indicated by increase in the static pressure of the column.	(1) Flow rates: (a) Low IBS rate. (b) High IBX rate. (2) Stream compositions: low nitric acid concentration in the IBXF. (3) Flooding of the IBS Column. (4) Off-standard pulse conditions: (a) Frequency (b) Air in pulse leg.	(1) Rates: Flow recorders on IBX and IBS streams. (IBX may be cross checked by tank volume readings of TK-209 or 210). (2) Analysis of IBXF. (3) Flooding: (a) Decrease in static pressure readings. (b) Interface and/or IBP valve loading variations. (4) Pulse: (a) Frequency check. (b) Flow of solution past piston.	(1) Rates: Adjust flows to proper ratios. (2) If HNO_3 composition of IBXF is low, correct IA Column flow ratios or compositions. (3) Flooding (see text, E2): (a) Decrease flow ratio. (b) Adjust frequency. (c) Decrease IBS rate (to not less than 40% of flowsheet). (4) Pulse: (a) Correct frequency. (b) For no flow past piston, shut down for maintenance.
D. High plutonium in the IBU stream (resulting in high plutonium in the 2DW).	(1) Routinely by analysis of the concentrated salt wastes (TK-F15) for plutonium. (2) Specifically by analysis of the 2DW for plutonium.	(1) Flow rates: (a) Low IBX rate. (b) High IBXF rate. (2) Stream compositions: low reducing agent concentration (IBX). (3) Flooding of the IBX Column. (4) Off-standard pulse conditions.	(1) Flow rates: (a) Flow recorder on the IBX (cross checked by tank volume readings of TK-209 and 210). (b) Flow recorder on the IBXF stream. (2) Analysis of sample from TK-209 or 210. (3) Flooding: (a) Decrease in static-pressure readings. (b) Interface and/or IBX flow variations. (4) Pulse: (a) Frequency check. (b) Flow of solution past piston.	(1) Adjust flow rates to proper ratios. (2) Restore reducing agent concentration. (3) Flooding (see text, E2): (a) Decrease flow rates. (b) Adjust frequency. (4) Pulse: (a) Correct frequency. (b) For no flow past piston, shut down for maintenance.
E. High uranium loss to the ICW.	← See Table VI-2 Similar to Off-Standard Condition C →			
F. High plutonium loss in the ICU.	← See this Table Similar to Off-Standard Condition D →			

[redacted]

[redacted]

TABLE VI-4

DETECTION AND REMEDY OF OFF-STANDARD CONDITIONS
FINAL URANIUM AND PLUTONIUM CYCLES

Warning! The diagnosis of off-standard conditions in the operation of the solvent-extraction columns from available instrument indications and analytical reports and the choice of appropriate remedial measures is often a complex matter requiring expert understanding and consideration of many facets of the technology of the solvent-extraction battery, for which no summary within the scope of a technical manual can be substituted. This tabulation may be of value in suggesting potentially fruitful approaches for consideration.

Off-Standard Condition	How Detected	Likely Causes	Detection of Cause	Remedy
A. High uranium in 2DW.	← See Table VI-2 - Similar to Off-Standard Condition A →			
B. High plutonium in the 2DW.	(1) Routinely by analysis of the concentrated salt waste for Pu (TK-F15). (2) Specifically by analysis of the 2DW for Pu.	(1) Defective IBX Column operation.	← See Table VI-3, Off-Standard Condition D →	
C. High plutonium in the 2DU (resulting in high plutonium in the 2BU).	(1) Routinely by analysis of the 2BU for Pu.	(1) Lack of reducing agent in the 2DF. (2) Low 2DS or 2DIS flow. (3) Defective IBX Column operation.	(1) Analysis of 2DF for reducing agent. (2) Flow recorder on 2DS and 2DIS.	(1) Adjust reducing agent concentration in the 2DF. (2) Adjust 2DS and/or 2DIS flow.
D. High fission-product content in the 2DU (resulting in a high fission-product content in the 2BU).	(1) Continuously by Beckman readings near the 2BU Concentrator. (2) Specifically by analysis of 2BU concentrate for gamma activity.	(1) Faulty Co-Decontamination Cycle performance. (2) Other causes similar to those listed in Table VI-2, Condition B.	← See Table VI-2 Similar to Off-Standard Condition B →	
E. High uranium in the 2BU.	← See Table VI-2 - Similar to Off-Standard Condition C →			
F. High plutonium in the 2AW stream.	(1) Routinely by analysis of the concentrated aqueous wastes (TK-F15) for plutonium. (2) Specifically by analysis of 2AW for Pu.	(1) Flow rates: (a) Low 2AX (high aq./org. flow ratio). (b) High 2AF and/or 2AS (high aq./org. flow ratio). (2) Stream compositions: (a) Low TBP concentration. (b) Low acid concentration in 2AF. (c) Failure to oxidize all of the Pu to the tetravalent state. (3) Flooding (4) Pulse frequency or amplitude off optimum conditions.	(1) Rates: (a) Flow recorder on 2AX. (b) Flow recorder on 2AF and/or 2AS. (2) Stream compositions: (a) Instrument specific-gravity readings or analyses. (b) Analysis of 2AF for HNO_3 and/or Pu(III). (c) Analysis of 2AW for Pu(III). (3) Flooding: (a) Increase in static pressure reading. (b) Interface and/or 2AW valve loading variations. (4) Pulse: (a) Frequency count. (b) Flow rate of solution past piston.	(1) Rates: Adjust flows to proper ratios. (2) Stream compositions: (a) Butt 2AX and/or 2AF into specifications; or (b) Adjust flow rate to compensate: (i) If low TBP concentration exists, raise 2AX rate. (ii) If low HNO_3 concentration exists in 2AF, lower 2AF rate or increase 2AX rate. (3) Flooding (see text, E2): (a) Decrease flow rates. (b) Adjust frequency. (4) Pulse: (a) Adjust frequency. (b) For no flow past piston, shut down for maintenance.
G. High fission-product content in the 2AP resulting in high fission-product content in the 2BP.	(1) Routinely by analysis of the 2BP for gamma activity.	(1) Flow rate: (a) Low 2AS. (b) High 2AX (resulting in higher F.P./Pu ratio in product). (2) Stream composition: (a) Low HNO_3 in 2AF (primarily Ru). (b) High gamma activity in 2AF (due to lack of slug "cooling" time or faulty Co-Decontamination and/or Partition Cycle operation). (3) Flooding (4) Pulse frequency or amplitude off optimum conditions.	(1) Rates: (a) Flow recorder on 2AS. (b) Flow recorder on 2AX. (2) Stream composition: (a) Analysis of 2AF for HNO_3. (b) Analysis of 2AF for gamma activity. (3) Flooding: (a) Increase in static pressure readings. (b) Interface and/or 2AW valve loading variations. (4) Pulse: (a) Frequency count (b) Flow rate of solution past piston.	(1) Rates: Adjust flows to proper ratios. (2) Stream compositions: (a) Adjust 2AF HNO_3 concentration. (b) Correct operating conditions in preceding cycles. (3) Flooding (see text, E2): (a) Decrease flow rates. (b) Adjust frequency. (4) Pulse: (a) Adjust frequency. (b) For no flow past piston, shut down for maintenance.
H. High uranium content in the 2AP (resulting in high U content in the 2BP).	(1) Routinely by analysis of 2BP for U.	(1) Faulty IBX and/or IBS Column operation.	← See Table VI-3, Off-Standard Condition C →	
I. High plutonium loss to the 2BW.	(1) Material balance around cycle.	(1) Flow rates: 2BX (2BP) (2) Excess HNO_3 in the 2BX. (3) Flooding. (4) Pulse frequency or amplitude off optimum conditions.	(1) Flow recorders on 2BX and/or 2BP streams. (2) Analysis of 2BX stream. (3) Flooding: (a) Static-pressure decrease. (b) Interface and/or 2BX flow variations. (4) Pulse: (a) Frequency count. (b) Flow rate of solution past piston.	(1) Adjust flow ratios. (2) Flooding (see text, E2): (a) Decrease flow rates. (b) Adjust frequency. (3) Pulse: (a) Adjust frequency. (b) If no flow past piston, shut down for maintenance.

[redacted]

[redacted]

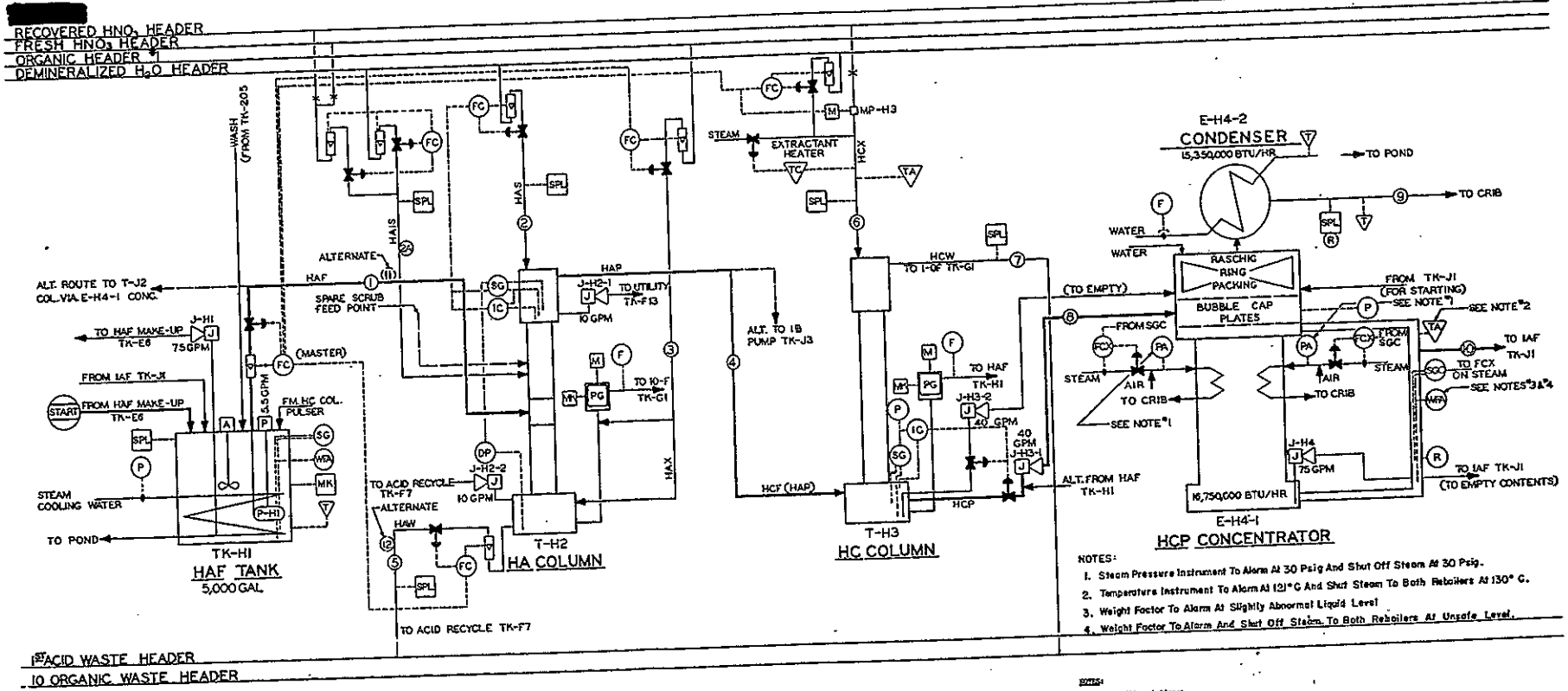

NOTES:

1. Steam Pressure Instrument To Alarm At 30 Psig And Shut Off Steam At 30 Psig.
2. Temperature Instrument To Alarm At 121° C And Shut Steam To Both Reboilers At 130° C.
3. Weight Factor To Alarm At Slightly Abnormal Liquid Level
4. Weight Factor To Alarm And Shut Off Steam To Both Reboilers At Unsafe Level.

1ST ACID WASTE HEADER
10 ORGANIC WASTE HEADER

Code	1		2		21		3		4		5		6		7		8		9		10		11		12	
Stream	HAF		HAS		HAIS		HAX		HAP		HAW		HCX		HCW		HCP		HFD		HFC		Alt. HAF		Alt. HAS	
Flow, GPM	5.18		1.725		1.725		18.96		29.58		8.09		34.51		18.96		35.05		30.64		4.41		3.23		8.17	
Components/Gal.		Wt. %		Wt. %		Wt. %		Wt. %		Wt. %		Wt. %		Wt. %		Wt. %		Wt. %		Wt. %		Wt. %		Wt. %		Wt. %
Wt, lb.									1.172	14.72																
CCl4, lb.	5.65	45.2							<0.007	0.1					<0.0016		0.834	9.31			6.62	52.1	5.625	45.0	<0.007	0.1
Fe, c.	0.686								Trace								0.1013	1.0			0.796		0.662		Trace	
HNO3, lb.	1.05	8.4			2.42	25.2			0.0105	0.13	1.163	12.86	.005	0.06	Trace		0.0137	0.1	Trace		0.11	0.7	1.15	8.4	1.24	12.8
NaNO3, lb.	Trace										Trace												0.033	0.3	0.027	0.3
NaNO2, lb.	0.01	0.3									0.006	0.1											0.013	0.1	0.009	0.1
H2O, lb.	5.76	46.3	8.33	100	7.16	74.8					7.774	86.84	8.33	99.94			7.975	89.94	8.52	99.9	5.968	47.2	5.72	45.8	9.70	86.3
γ Series	134.1								0.092		85.7				0.0171		0.0198				0.156		136.1		85.7	
TBP-Dil., lb.							9.0	100	6.780	85.15	0.01	0.1			7.0	100	0.01	0.1	0.01	0.1					0.01	0.1
$Fe_2(SO_4)_3$, $Fe(NO_3)_3$, Na_2SO_4, lb.																							0.05	0.4	0.027	0.3
Physical Properties																										
Sp. Gravity	1.50		1.0		1.15		0.84		0.96		1.08		1.0		0.84		1.07		1.00		1.52		1.50		1.07	
Temperature, °C.	25		25		25		25		25		25		45		39		30		60		105		25		25	
Viscosity, cp25	2.5		1.0		1.0		2.0		3.0		1.0		1.0		2.0		1.0		1.0		2.5		2.5		1.0	
Phase	L		L		L		O		O		L		L		O		L		L		L		L		L	

NOTES:

1) Symbol Abbreviations

- FC — Flow Controller
- SG — Specific Gravity
- IC — Interface Controller
- SPL — Sampler
- DP — Differential Pressure
- MK — Microphone
- F — Flow Recorder
- P — Pressure
- WA — Weight-Factor Alarm
- WC — Weight-Factor Controller Alarm
- FCX — Flow Integrator
- PA — Pressure Alarm
- SGC — Specific-Gravity Controller
- R — Radiation Recorder
- M — Motor
- TC — Temperature Controller
- T — Temperature Recorder
- TA — Temperature Alarm
- P — Pump
- MP — Metering Pump
- A — Agitator

2) Drawn and calculated according to Purex MF F3 Flowsheet.
3) Basis: 10 short tons of uranium per day (instantaneous rate), exposure of 600 MWD/T and 90-day cooling period.
4) All instruments are chart recorded.
5) To convert from pounds per gallon to grams per liter, multiply by 119.9
6) The given volume of tanks is to overflow. Working volume is about 80% of given volume.

FIGURE VI-1

PROCESS FLOW DIAGRAM

CO-DECONTAMINATION CYCLE

[redacted]

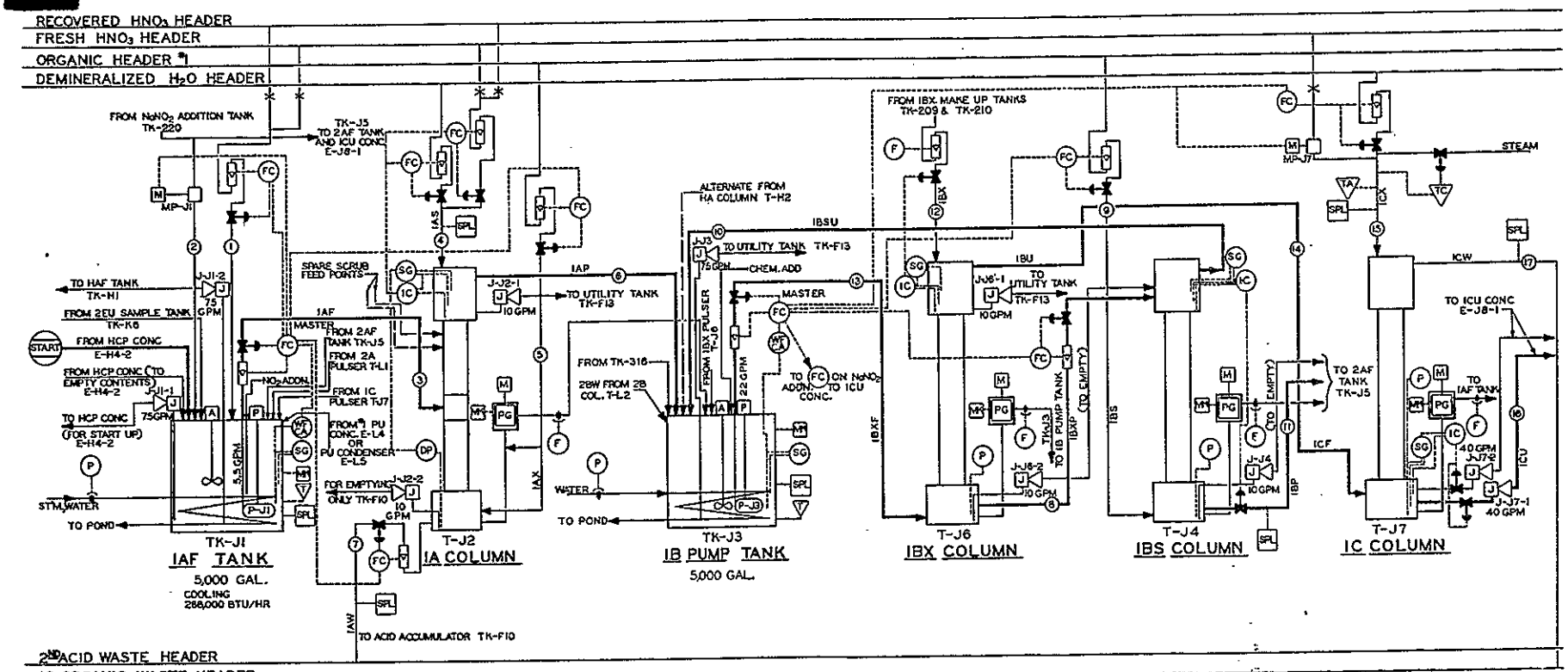

Code	1		2		3		4		5		6		7		8		9		10		11		12		13		14		15		16		17	
Stream	HNO_3		$NaNO_2$		IAF		IAS		IAX		IAP		IAB		IBXF		IBS		IBSU		IBP		IBX		IBXF		IBU		ICX		ICU		ICW	
Flow, GPM	0.743		0.033		5.18		3.45		18.96		19.74		8.02		1.69		3.10		3.39		1.63		1.55		23.67		23.47		34.50		35.07		22.79	
Composition/Sol.		Wt. %		Wt. %		Wt. %		Wt. %		Wt. %		Wt. %		Wt. %		Wt. %		Wt. %		Wt. %		Wt. %		Wt. %		Wt. %		Wt. %		Wt. %		Wt. %		Wt. %	
H_2, lb.											1.16	13.7							0.075	1.0					0.98	12.3	0.98	12.63						
HN_3, lb.					3.66	45.2							0.009	0.1	0.18	1.95															0.83	9.39	Trace	
HNO_3, lb.	6.84	60			1.05	8.4	1.57	17.1			0.10	1.2	1.11	12.4	3.34	31.5			0.28	3.9	0.84	9.50	0.05	0.59	0.12	1.50	0.03	0.40	0.005	0.06	0.026	0.30		
$Fe_2(SO_4)_3$, $Fe(NO_3)_3$, $Zr(SO_4)_2$, lb.															0.062	0.67																		
$Fe(HSO_3)_3$, lb.																					0.062	0.70	0.062	0.74										
$NaNO_2$, lb.			0.92	10.3	0.01	0.1							0.005																					
Na_2SO_4, lb.													Trace																					
Fe_2O_3, lb.					0.68						0.178				2.08				Trace		2.156				0.113		Trace							
H_2O, lb.	4.57	40	8.00	89.7	15.79	46.3	7.60	82.9			7.80	87.4	7.66	82.9							7.92	89.7	0.30	98.7					8.33	99.94	7.97	90.21		
TBP-Dil., lb.									7	100	6.81	85.1	0.01	0.1			7	100	6.82	95.1	0.01	0.1			6.90	86.2	6.74	86.97			0.01	0.1	7	100
γ Curies											2.3×10^{-6}		0.086								1×10^{-3}						1×10^{-6}				4.6×10^{-3}		3×10^{-5}	
Physical Properties																																		
Sp. Gravity	1.37		1.07		1.50		1.1		0.84		0.96		1.07		1.11		0.84		0.86		1.06		1.01		0.96		0.93		1.0		1.06		0.84	
Temperature, °C.	25		25		40 max.		25		25		25		25		25		25		25		25		25		25		25		40		30		35	
Viscosity cp[5]	2.0		1.0		2.0		1.0		2.0		3.0		1.0		1.0		2.0		2.0		1.0		1.0		3.0		3.0		1.0		1.0		2.0	
Phase	A		A		A		A		O		O		A		A		O		O		A		A		O		O		A		A		O	

NOTES:

1) Symbol Abbreviations

- FC — Flow Controller
- SG — Specific Gravity
- IC — Interface Controller
- SPL — Sampler
- DP — Differential Pressure
- MK — Microphone
- F — Flow Recorder
- P — Pressure
- AH — Weight-Factor Alarm
- HIC — Weight-Factor Controller Alarm
- FI — Flow Integrator
- PA — Pressure Alarm
- SGA — Specific-Gravity Controller
- R — Radiation Recorder
- M — Motor
- TC — Temperature Controller
- T — Temperature Recorder
- TA — Temperature Alarm
- P — Pump
- MP — Metering Pump
- A — Agitator

2) Drawn and calculated according to HW #3 Flowsheet.

3) Basis: 10 short tons of uranium per day (instantaneous rate), exposure of 500 MWD/T and 90-day cooling period.

4) All instruments are chart recorded.

5) To convert from pounds per gallon to grams per liter, multiply by 119.9.

6) The given volume of tanks is to overflow. Working volume is about 80% of given volume.

FIGURE VI-2

PROCESS FLOW DIAGRAM

PARTITION CYCLE

[redacted]

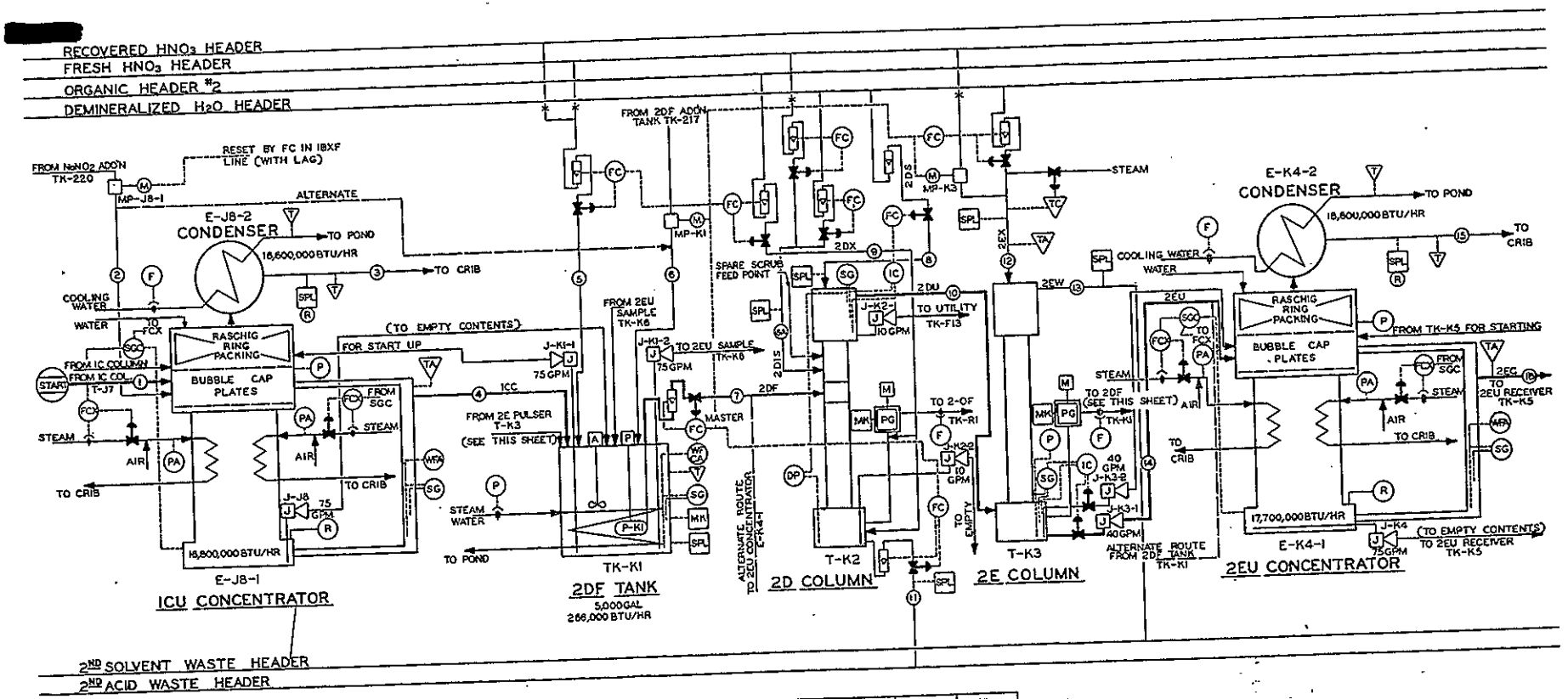

Code	1		2		3		4		5		6		7		8		8A		9		10		11		12		13		14		15		16		17	
Stream	ICU		$NaNO_2$ Add'n		ICU		IUC		HNO_3 Add'n		$Fe(NH_4SO_4)_2$ Add'n		2DF		2DS		2DIS		2DX		2DU		2EX		2EU		2EW		2EG		2EP		2EG		U Product	
Flow, GPM	35.07		0.0347		30.61		4.25		0.684		0.0311		5.18		1.72		1.72		18.96		19.58		8.08		34.50		16.96		35.07		31.44		3.63		3.63	
Components/Gals.		Wt. %		Wt. %		Wt. %		Wt. %		Wt. %		Wt. %		Wt. %		Wt. %		Wt. %		Wt. %		Wt. %		Wt. %		Wt. %		Wt. %		Wt. %		Wt. %		Wt. %		Wt. %
U, lb.																						1.36		14.50			Trace									
UO2, lb.	0.83	9.39					6.87	53.86					5.65	45.20							0.01	0.13	1.16	13.00	0.005	0.06			0.83	9.34			8.03	59.53	8.03	59.53
UO3, lb.	0.026	0.30			.005	0.06	0.18	1.40	6.84	60			3.05	8.4			2.62	25.2					0.02	0.2					0.014	0.16	.005	0.06	0.14	1.02	0.14	1.02
$Fe(NH_4SO_4)_2$, lb.											4.17	37.0	0.02	0.2																						
$NaNO_3$, lb.			0.863	9.74							7.0	63.0	5.78	46.2	8.34	100	7.16	74.8					7.74	86.7	6.33	99.94			8.06	90.4	8.32	99.84	5.34	39.46	5.34	39.46
H_2O, lb.	7.97	90.22	7.97	90.26	8.32	99.84	5.70	44.74	6.57	40			7×10^{-4}								6×10^{-6}		2.8×10^{-4}				9×10^{-7}		3×10^{-6}				2.8×10^{-5}		2.8×10^{-5}	
% Curies	4.6×10^{-5}																		7	100	6.83	85.37	0.01	0.10			7	100	0.01	0.10	.01	0.10				
TBP-Dil., lb.	0.01	0.1			0.01	0.10																														
Physical Prop.																																				
Sp. Gravity	1.53		1.05		1.0		1.53		1.37		1.34		1.50		1.0		1.15		0.84		0.96		1.07		1.0		0.84		1.07		1.0		1.62		1.63	
Temperature, °C.	40		25		80		105		25		25		40 max.		25		25		25		25		25		45		40		35		80		105		25.0	
Viscosity, cp[25]	1.0		1.0		1.0		2.5		2.0				2.0		1.0		1.0		2.0		3.0		1.0		1.0		2.0		1.0		1.0		1.0		3.0	
Phase	L		L		L		L		L		L		L		L		L		G		G		L		L		G		L		L		L		L	

NOTES:

1) Symbol Abbreviations:

- FC — Flow Controller
- SG — Specific Gravity
- IC — Interface Controller
- SPL — Sampler
- DP — Differential Pressure
- MK — Microphone
- F — Flow Recorder
- P — Pressure
- WA — Weight-Factor Alarm
- WC — Weight-Factor Controller Alarm
- FCI — Flow Integrator
- PA — Pressure Alarm
- SGC — Specific-Gravity Controller
- R — Radiation Recorder
- M — Motor
- TC — Temperature Controller
- T — Temperature Recorder
- TA — Temperature Alarm
- P — Pump
- MP — Metering Pump
- A — Agitator

2) Drawn and calculated according to Purex Rx #3 Flowsheet.

3) Basis: 10 short tons of uranium per day (instantaneous rate), exposure of 600 MWD/T and 90-day cooling period.

4) All instruments are chart recorded.

5) To convert from pounds per gallon to grams per liter, multiply by 119.9.

6) The given volume of tanks is to overflow. Working volume is about 80% of given volume.

FIGURE VI-3

PROCESS FLOW DIAGRAM

FINAL URANIUM CYCLE

[redacted]

[redacted]

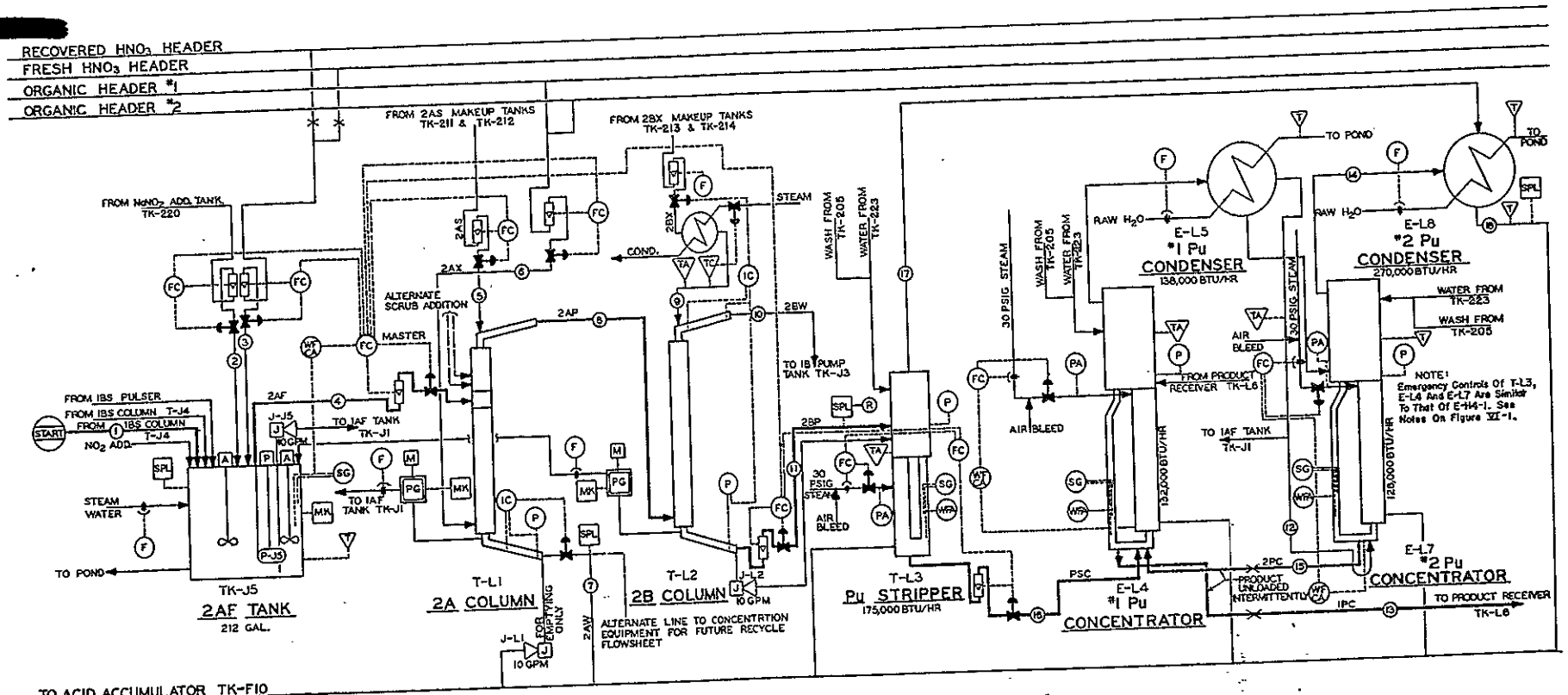

Code	1	2	3	4	5	6	7	8	9	10	11	12	13	14	15	16	17	18
Stream	1BP	$NaNO_2$ Add'n	HNO_3	2AF	2AS	2AX	2AB	2AP	2BX	2BW	2BP	2PS	2PC	2PF	2PG	2PC	2PT	2PO
Flow, GPM	1.63	0.202	1.140	2.98	0.372	0.741	3.351	0.741	0.373	0.741	0.373	0.392	0.0124	0.374	0.0176	0.186	0.186	0.360
Composition/Conc.																		
HNO_3, Lb.	0.64 / Tr. 9.51		6.84 / Tr. 60.0	3.15 / Tr. 31.5	0.26 / Tr. 3.32		2.84 / Tr. 28.84	0.05 / Tr. 0.74	0.005 / Tr. 0.06	0.005 / Tr. 0.06	0.11 / Tr. 1.31	0.49 / Tr. 5.7	2.31 / Tr. 23.68	0.11 / Tr. 1.26	2.02 / Tr. 21.63	0.21 / Tr. 2.28	Trace / Tr.	0.115 / Tr. 1.38
$Fe(NO_3)_3$, Lb.	Trace			Trace			Trace											
$Fe_2(SO_4)_3$, Lb.	0.006			0.03 / 0.3			0.03 / 0.3											
$RuNO_3$, Lb.				0.02 / 0.2			0.02 / 0.2											
$RuNO_2$, Lb.		0.860 / 9.77		0.03 / 0.3			0.03 / 0.3											
Ru_2SO_4, Lb.				0.01 / 0.1			0.01 / 0.1											
$RuCO_3$, Lb.	Trace			Trace			Trace											
$Fe(HSO_3)_2$, Lb.	0.06 / 0.70						Trace	4.82 / 0.14		Trace	9.45 / 0.23	Trace	283.9 / 6.4		Trace	18.93 / 0.49	Trace	Trace
Fe, G.	2.21			1.21			6.90 / 70.1		8.33 / 99.92		8.29 / 98.46	8.09 / 94.3	6.82	8.22 / 98.74	7.92 / 78.37	8.21 / 97.63	8.34 / 100	8.22 / 98.62
H_2O, Lb.	7.93 / 89.79	7.97 / 90.23	2.58 / 40.0	6.76 / 47.6	8.16 / 96.88	7.8 / 100	6.99 / 99.12			7.00 / 99.92								
TBP-Dil., Lb.																3.7×10^{-4}		
Y Series	1×10^{-3}			5.5×10^{-4}			2.6×10^{-4}	1.2×10^{-4}		2.7×10^{-5}	1.9×10^{-4}		3.6×10^{-3}					
Physical Prop.																		
Sp. Gravity	1.06	1.06	1.37	1.20	1.01	0.84	1.18	0.85	1.0	0.84	1.02	1.03	1.19	1.0	1.12	1.025	1.0	1.0
Temperature, °C.	25	25	25	25	25	25	25	25	45	40	35	53	107	105	106	100	100	82
Viscosity cp[25]	1.0	1.0	2.0	1.5	1.0	2.0	1.5	2.0	1.0	2.0	1.0	1.0	1.5	—	1.0	1.5	—	
Phase	L	L	L	L	L	G	L	G	L	G	L	L	L	Vapor	L	L	Vapor	L

NOTES:

1) Symbol Abbreviations:

- (FC) Flow Controller
- (SG) Specific Gravity
- (IC) Interface Controller
- (SPL) Sampler
- (DP) Differential Pressure
- (MK) Microphone
- (F) Flow Recorder
- (P) Pressure
- (HR) Height-Factor Alarm
- (HC) Height-Factor Controller Alarm
- (FI) Flow Integrator
- (PA) Pressure Alarm
- (SGC) Specific-Gravity Controller
- (R) Radiation Recorder
- (M) Motor
- (TC) Temperature Controller
- (T) Temperature Recorder
- (TA) Temperature Alarm
- (P) Pump
- (MP) Metering Pump
- (A) Agitator

2) Trace and calculated according to Purex PF #3 Flowsheet.

3) Basis: 10 short tons of uranium per day (instantaneous rate), exposure of 600 MWD/T and 90-day cooling period.

4) All instruments are chart recorded.

5) To convert from pounds per gallon to grams per liter, multiply by 119.9

6) The given volume of tanks is to overflow. Working volume is about 80% of given volume.

FIGURE VI-4

PROCESS FLOW DIAGRAM

FINAL PLUTONIUM CYCLE

[redacted]

PART II: PROCESS, continued

CHAPTER VII. CONCENTRATION OF URANIUM AND PLUTONIUM SOLUTIONS

CONTENTS

Page

A. CONCENTRATION OF URANIUM SOLUTIONS 702

1. Properties and Compositions of Solutions 702
   1.1 Physical properties and compositions 702
   1.2 TBP hydrolysis 703
   1.3 "Red oil" formation 704
   1.4 Rapid reaction of TBP with nitrate ion 704
2. Uranium Concentrators 704

B. URANIUM CONCENTRATION PROCEDURE 710

1. Normal Procedure 710
   1.1 Steady-state operation 710
   1.2 Start-up and shutdown 712
2. Detection and Remedy of Off-Standard Conditions 713

C. CONCENTRATION OF PLUTONIUM SOLUTIONS 715

1. General 715
2. Properties and Composition of Solutions 716
3. Plutonium Stripper 719
4. Plutonium Concentrators 720
5. Product Sampling and Packaging 722

D. PLUTONIUM CONCENTRATION PROCEDURE 723

1. Critical Mass Control 723
2. Normal Procedure 723
3. Detection and Remedy of Off-Standard Conditions 726

REFERENCES 728

CHAPTER VII. CONCENTRATION OF URANIUM AND PLUTONIUM SOLUTIONS

The uranium and plutonium streams from the solvent-extraction battery, as well as the aqueous uranium product streams from the Co-Decontamination and Partition Cycles, are concentrated by evaporation in preparation for subsequent processing steps. Any solvent entrained or dissolved in the concentrator feeds is removed with the distillate to minimize adverse process effects from TBP hydrolysis or other reactions. De-entrainment columns reduce the entrainment losses of uranium and plutonium to negligible values. This chapter describes the operations performed in the concentration steps. The equipment and its control are discussed from the functional standpoint. Additional details of the equipment are presented in Chapter XIII, and of the instrumentation in Chapter XVII.

A. CONCENTRATION OF URANIUM SOLUTIONS

Optimum operation of the Purex solvent-extraction batteries requires that the intercycle uranium-bearing aqueous streams (HCP and ICU) be concentrated from 0.2 M to 1.6 M before being introduced as feed to the following solvent-extraction cycle; the uranium product stream (2EU) is concentrated from 0.2 M to 2.0 M before shipping to the calcination operation.

1. Properties and Compositions of Solutions

1.1 Physical properties and compositions

Tabulated below are pertinent data concerning the HCP, ICU, and 2EU solutions before and after concentration. The compositions noted may be expected to vary as much as 30% as a result of variations of flow ratios, concentrations, and operating temperatures.

TYPICAL STREAM DATA

Basis: The daily processing under HW #3 Flowsheet conditions of 10 tons of uranium containing 514 g. Pu per ton of uranium.

Stream / Component or Property:	HCP	HPC	ICU	IUC	2EU	2UC
UNH, M	0.199	1.58	0.199	1.64	0.199	1.92
Pu, g./l.	0.026	0.21				$<4.6\times10^{-6}$
HNO_3, M	0.027	0.17	0.05	0.34	0.027	0.26
Fe, g./g. U[a]		$<1.4\times10^{-4}$		$<1.4\times10^{-4}$		$<1.4\times10^{-4}$
Cr, g./g. U[a]		$<0.3\times10^{-4}$		$<0.3\times10^{-4}$		$<0.3\times10^{-4}$
Ni, g./g. U[a]		$<0.2\times10^{-4}$		$<0.2\times10^{-4}$		$<0.2\times10^{-4}$
Na, g./g. U[a]		$<0.1\times10^{-4}$		$<0.1\times10^{-4}$		$<0.1\times10^{-4}$
Viscosity at 25°C., cp.	1.0	2.3	1.0	2.4	1.0	2.9
Specific gravity at 25°C.	1.07	1.52	1.06	1.53	1.07	1.62
Flow, gal./min.	35.1	4.41	35.1	4.25	35.1	3.63

Note: (a) The Fe, Cr, and Ni are from the corrosion of the stainless-steel concentrators, and the Na enters the process with the deionized water.

1.2 TBP hydrolysis

Tributyl phosphate hydrolyzes slowly in boiling acid solutions to form successively: dibutyl phosphoric acid (DBP), monobutyl phosphoric acid (MBP), and finally orthophosphoric acid, the first step being rate determining. The reaction in a single phase is zero or first-order with respect to HNO_3 concentration. Representative hydrolysis rates as a function of temperature and acidity are given in Chapter IV. The hydrolysis products of TBP form strong complexes with uranium and plutonium which exhibit undesirable distribution coefficients and emulsifying characteristics. For example, in the HC, IC, 2E, and 2B systems the DBP complex of uranium or plutonium exhibits a high organic-to-aqueous-phase distribution ratio (E_a^o); the transfer of uranium or plutonium into the aqueous product phase is thus hindered, and a high product loss to the solvent effluent results. The complex formed between uranium or plutonium and monobutyl phosphate is relatively insoluble in either phase and forms emulsions or interfacial scum in the solvent-extraction columns. Further discussion of the effects of TBP hydrolysis products can be found in Subsections A2 and B1 of Chapter IV. The presence of TBP and/or DBP in the concentrated uranium stream can also cause foaming in the pots during the calcination of

uranium to UO_3. To prevent such foaming, the TBP and DBP concentration in the concentrated uranium stream being fed to the calcination pots must be kept below 5 and 10 parts per 10^6 parts of 100% UNH, respectively.(17) Steam stripping, discussed under 2.3, below, is employed on all uranium concentrators to remove most of the dissolved and entrained TBP before it can be hydrolyzed to DBP.

1.3 "Red oil" formation

A complex mixture of organo-uranium compounds insoluble in either aqueous or solvent process streams is sometimes formed under off-standard processing conditions. This mixture, commonly called "red oil" at H.A.P.O., sometimes called "third phase" in other project reports, varies from yellow-orange to red in color and has a specific gravity which may range from 1.1 to 1.6. While not completely characterized, it is known to contain uranium, TBP decomposition products, and possibly nitrated fragments of the hydrocarbon diluent. Red oil is produced by a chemical reaction between an aqueous solution of uranium and nitric acid with a Purex-type solvent, either by prolonged contact at ambient temperatures or by repeated concentration of solvent-saturated aqueous solutions. The presence of DBP-bearing red oil in solvent-extraction columns promotes unfavorable, high uranium and plutonium distribution ratios in C-type columns, as discussed in Chapter IV. Red oil may be an intermediate product in the rapid reaction of solvent with nitric acid (discussed below).

1.4 Rapid reaction of TBP with nitrate ion

A rapid reaction may result when mixtures of TBP and aqueous solutions of uranium and nitric acid have attained a minimum temperature of 135°C. during concentration.(2,6,9) This reaction, discussed in Chapter IV, may under some conditions be sufficiently violent to rupture a concentrator. The conditions required for such a reaction are prevented from arising in the Purex uranium concentrator by design and operational safeguards discussed in this chapter. The reboilers are heated with a maximum of 30-lb./sq. in. gage steam, which limits the maximum temperature attainable in the concentrate to 135°C., even though uncontrolled overconcentration should occur. Further safeguards are provided by instrumentation which automatically shuts down a concentrator before potentially hazardous overconcentration can occur. Steam stripping of the concentrator feeds prior to concentration minimizes the TBP content of the concentration bottoms. These safety devices are discussed in Subsection B1, below.

2. Uranium Concentrators

2.1 Description

The Purex Plant has three uranium concentrators, two for intercycle concentration and one for product concentration. The HCP (E-H4-1) and ICU (E-J6-1) Concentrators concentrate the HCP and ICU from 9% UNH to 52% UNH while the 2EU Concentrator (E-K4-1) concentrates the 2EU from 9% UNH to 60% UNH. The three uranium concentrators discussed here and the two acid concentrators discussed in Chapter X are identical in design.

Each concentrator is essentially a steam-heated, vertical-tube unit employing thermal recirculation. Over-all height of the units is 29 ft. 9 in., and each weighs about sixty tons, including two seven-ton tube bundles and a four-ton condenser. The principal engineering features of these concentrators are presented in Chapter XIII, pertinent process connections and instrumentation are shown shematically on the process flow diagrams in Chapter VI, and the instrumentation is discussed in Chapter XVII. The design differs from other long-tube evaporators at H.A.P.O. because of potentially high corrosion rates and the large heat-transfer surfaces required.

The reboiler of each Purex-Plant uranium concentrator has an overflow capacity of about 3200 gallons and contains two removable heat-exchange tube bundles inside cylindrical sections which are off-set from a third center section for ready accessibility. Each tube bundle has 1260 sq. ft. of inside-tube-area heat-exchange surface (1650 sq. ft. based on outside tube area), and is designed for a normal heat duty of 14,000,000 B.t.u./hr. The tube bundles are connected to a central cylinder by 21-in.-diameter recirculation lines at the bottom and by rectangular vapor ducts at the top. A "stilling chamber" is connected in parallel with the central cylinder, and contains the overflow connection for the concentrate.

A plate and packed column which surmounts the center section of the reboiler is provided for the steam stripping of TBP from the feed and for the de-entrainment of uranium, plutonium, and fission products from the vapors. This column, which is 9 ft. in diameter and 14 ft. high, contains seven bubble-cap trays topped by a 3-ft.-high section packed with 1-in. Raschig rings. Each plate has an overflow capacity of about 100 gallons of liquid, contains 162 four-inch bubble-caps, and is connected with the next lower plate by liquid downcomers. Two 1/4-inch weep holes in each overflow wier are so placed as to permit essentially complete drainage of the plate when no liquid is fed to the unit. The liquid feed to the concentrator normally enters the column on the second tray from the top, although an alternate feedpoint is provided on the fourth tray from the top, hence providing a choice of either one or three "dry" plates for de-entrainment of liquid from the overhead vapor. The liquid drains from the bottom tray to the reboiler via three interconnected downcomers which terminate about one foot below the normal level of liquid in the reboiler. A splash plate, or baffle, is provided below the bottom tray. Demineralized water or decontaminating agents may be introduced via a spray ring just above the packing.

A shell-and-tube condenser rests on top of the stripper-de-entrainment column and provides 1050 square feet of heat-exchange surface on the cooling water side. Vapor enters the condenser via a sixteen-inch line flanged to the tower, and the condensate drains to the six-inch condensate header which carries the condensates from the building. Connector heads are provided for the future installation of a jumper which would permit the return of condensate to the second highest tray of the tower.

2.2 Concentration

UNH solution enters the concentrator reboiler via the stripping column,

mixes with the concentrated solution as it is recirculated repetitively through the two vertical tube bundles, and leaves the concentrator via the stilling chamber. Thermal recirculation of the solution through the vertical tube bundles results from the boiling action of the steam-heated tubes, the solution being jetted from the top of the tubes and returning to the bottom of the tubes via a central downcomer section. As the liquid rises in the tubes, it is partially vaporized, thus reducing the weight per unit volume of the liquid-vapor mixture. This weight reduction driven by the hydrostatic head of liquid in the central downcomer causes more solution to enter the tube section. As the liquid-vapor mixture rises through the tube, the liquid continues to vaporize, creating a rapidly increasing volume of vapor. The liquid-vapor mixture continues to expand and accelerate upward so long as the total pressure at the base of the tube, due to the weight of its contents plus the velocity pressure drop of the mixture rising through it, does not exceed the static pressure exerted by the contents of the center section. The vapor-liquid mass jetting from the tube is deflected by an impingement plate to the center section, where the vapor continues upward into the column while the concentrated liquid falls back to the liquid surface for recycle or withdrawal as product.

A measure of the ability of heat to transfer from the condensing steam in the steam chest to the solution in the tubes is the "heat-transfer coefficient", generally stated in terms of B.t.u./(hr.)(sq. ft.)(°F. temperature difference). The heat-transfer coefficient is a function of such variables as the characteristics of the solution being concentrated, the geometry of the heat exchanger, and the rate of heat exchange, and it must be determined experimentally for any specific unit. The following table lists the maximum heat-transfer coefficients which would reasonably be expected in the Purex-Plant concentrators. These heat-transfer coefficients have been estimated from those obtained while concentrating HCP in a nearly full-scale concentrator generally resembling the Purex-Plant uranium concentrators.(1,11,13)

Heat Duty, B.t.u./(Hr.)(Sq. Ft.)(a)	Processing Rate, Tons U/Day(b)	Heat-Transfer Coefficient, B.t.u./(Hr.)(Sq. Ft.)(°F.)	Steam Pressure, Lb./Sq. In. Gage
4000	6	170	12
8000	12	280	14
16000	24	440	18
24000	36	480	27
254000	38	480	30

Notes: (a) Heat-exchange surface (based on inside tube area): 2520 sq. ft. (1260 sq. ft. per reboiler tube bundle).

(b) HW #3 Flowsheet conditions.

As indicated in the table, the heat-transfer coefficients increase rapidly with heat duty up to about 16,000 B.t.u./(hr.)(sq. ft.) and more slowly at higher heat duties. The steam-chest pressure estimated for a

single reboiler processing 27 tons U/day is 30 lb./sq. in. gage which corresponds to a maximum steam temperature of 135°C.

2.3 Steam stripping

Prior to the concentration of aqueous solutions of uranium, the solvent carried by solubility and entrainment is removed by steam stripping to minimize the formation of DBP or red oil. This removal is accomplished by introducing the solution to the concentrator via the stripping tower, where it is countercurrently contacted by the water vapor escaping the reboiler. The TBP and diluent are vaporized and carried with the water vapor to the condenser, leaving the process with the condensate.

A McCabe-Thiele-type operating diagram for the steam stripping of TBP is presented as Figure VII-1. A similar diagram can be constructed for the diluent, the plot being determined by the vapor pressure and solubility characteristics of the diluent in use. Such treatment is not included in this manual, since the degree of diluent removal required for process protection is not critical, and since the diluents considered for the Purex process have higher vapor pressures than tributyl phosphate and are, therefore, more completely removed by steam stripping than TBP.

The equilibrium line in Figure VII-1 is plotted from vapor pressure[1a] and solutility[12] data for TBP and defines the equilibrium concentration of TBP in the vapor (Y) as a function of the TBP concentration in the liquid (X) when boiling at standard atmospheric pressure. The equilibrium data shown are for a TBP-water system, the effect of the small concentrations of nitric acid and uranyl nitrate in the concentrator feed on vapor pressure being assumed negligible in the present case. In that portion of the equilibrium line representing a true solution of TBP in the liquid, it is assumed that Henry's law applies. This law states that the partial pressure of the dissolved component is proportional to its concentration in the liquid phase. Stated mathematically,

$$Y = KX \qquad (1)$$

where Y = mole fraction TBP in the vapor phase;

K = proportionality factor (in this case, 62.2);

X = mole fraction TBP in the liquid phase.

As the values of X are increased to exceed the solubility of TBP in the aqueous phase (concentrator feed), a second liquid phase (entrained solvent) is present and the values of Y become limited by the ratio of vapor pressures of pure TBP and water at the operating pressure and temperature. This value of Y is constant for any degree of entrained solvent in the concentrator feed.

The operating line shown in Figure VII-1 is drawn to represent the stripping of TBP to the desired concentration of 5 parts of TBP per million parts of UNH under the anticipated operating conditions. The equation for the operating line is developed from a TBP material balance around either end of

the stripper. At steady-state operating conditions, the amount of TBP entering the stripper via the influent streams must equal the amount of TBP leaving via the effluent streams. Equating the influent and effluent flow of TBP on the bottom plate, the following expression is obtained:

$$X(L) + Y_S(V) = Y(V) + X_W(L) \quad \ldots\ldots\ldots\ldots\ldots\ldots \quad (2)$$

where X = mole fraction TBP in liquid entering bottom plate;

X_W = mole fraction TBP in liquid effluent from stripping tower;

Y = mole fraction TBP in vapor leaving bottom plate;

Y_S = mole fraction TBP in vapor entering stripper tower;

L = flow rate of liquid, moles per unit time;

V = flow rate of vapor, moles per unit time.

Solving Equation (2) for Y gives the following equation:

$$Y = (L/V)X + Y_S - L/V\ (X_W) \quad \ldots\ldots\ldots\ldots\ldots\ldots \quad (3)$$

If L/V, Y_S, and X_W are assumed constant, this equation defines a straight line when plotted on rectangular coordinates and expresses the operating conditions throughout the stripper. While L/V is not constant because a portion of the steam entering the stripper will be condensed in heating the entering feed, the L/V change is so slight that it can be neglected. By assuming Y_S is zero and inserting the maximum value of X_W desired in the stripped solution, an operating line can be constructed from Equation (3). This operating line is shown in Figure VII-1 and shows that 1.65 theoretical plates would be required to strip a typical entering feed containing 0.35 g. TBP/l.[10] to the desired low concentration of 0.0005 g. TBP/l. This limit of 5 parts of TBP per 10^6 parts of 100% UNH applies, strictly, only to the concentrated 2EU stream, and is established to minimize foaming in the Hanford batch calcination equipment in 224-U Building. Two theoretical stages would suffice to strip a feed containing up to 1.58 g. TBP/l. (corresponding to 0.49 volume per cent entrainment of 30% TBP) to the maximum desired X_W value. In operation, the ratio of actual to theoretical plates in the steam stripping section will probably vary between two and five (i.e., 20 to 50 per cent over-all plate efficiency).

2.4 De-entrainment

Entrained droplets of uranium and plutonium solution must be removed from the overhead vapors of the uranium concentrators in order to minimize the losses of fission-product activity, plutonium, and uranium to the condensate. Since the condensate streams are sent to caverns on an "unlimited" basis (discussed in Chapter X), no fission-product, uranium, or plutonium concentration limits can be specified for the condensate, and de-entrainment

requirements in the uranium concentrators are dependent primarily upon the maximum uranium and plutonium losses permissible from an economic standpoint. These permissible losses have been tentatively established as 0.01% from the HCP Concentrator (uranium and plutonium) and 0.1% from the ICU or 2EU Concentrators (uranium only).

In the concentrators, liquid de-entrainment from vapor is accomplished by impingement and low vapor velocity. Liquid droplets entrained in the vapor jetting from the reboiler tubes are partially removed by being deflected by the impingement plate above the tubes. The vapor velocity is then reduced to about 2 ft./sec. in the central chamber when processing 10 tons of uranium per day, permitting additional particles to settle. Entrained droplets of concentrate are further removed by passing through the stripping section of the concentrator tower, where the flooded bubble-cap trays provide effective de-entrainment, resulting in a cumulative concentrate-to-overhead de-entrainment factor of the order of 10^6. Droplets of concentrator feed solution which are entrained at the feed plate are de-entrained from the vapors by passage through the one (or three) dry bubble-cap tray(s) and the Raschig-ring packing above the feed tray, the de-entrained liquid draining back by gravity. The degree of de-entrainment obtained is dependent on the superficial vapor velocity in the tower, and, to a lesser degree, upon the number of dry bubble-cap trays employed above the feed tray. The de-entrainment factor (D.F.) obtained with a small-scale (6-in.diam.) model of the HCP Concentrator de-entrainment tower is summarized in the following table.(16)

Equivalent Rate, Tons U/Day(a)	Superficial Vapor Velocity, Ft./Sec.	F Factor(b)	Per Cent of Feed U Entrained(c)	
			3 Trays(d)	1 Tray(d)
3	0.62	0.12	0.0005	0.001
9 to 10	1.8 to 2.0	0.34 to 0.37	<0.0005	<0.0003
15	3.1	0.58	<0.0003	0.0003
18 to 19	3.7 to 4.0	0.67 to 0.73	<0.0003	<0.0003
20	4.1	0.76		≦0.003
20.5	4.2	0.79		0.001
21	4.3	0.80	<0.0003	≦0.001
22	4.6	0.86	0.0003	8
25	5.2	0.97		10
29	6.0	1.1	20	

Notes:

(a) Tons U/day, based on Purex-Plant concentrator at Purex HW #3 Flowsheet conditions at experimental superficial vapor rate.

(b) Defined as:

$$\frac{(\text{Vapor rate, cu.ft./sec.})(\text{Vapor density, lb./cu.ft.})^{0.5}}{(\text{Column cross-sectional area, sq. ft.})(\text{Sp. gr. of liquid feed})^{0.5}}$$

(c) Per cent U entrained = (weight rate of U in vapor)(100)/(weight rate of U in feed).

(d) Dry; above feed point. Surmounted by 3-ft. layer of 1-in. stainless-steel Raschig rings.

Entrainment losses in the Purex-Plant concentrators are expected to be of the same order of magnitude as indicated in the above table. The data indicate that it should be possible to operate the HCP, ICU, and 2EU Concentrators at rates as high as 21 tons of uranium per day (HW #3 Flowsheet conditions) and still realize entrainment losses of less than 0.01% when using one dry de-entrainment tray. These losses could be reduced even further (approximate factor of 10) by using the lower feed point and returning some of the condensate to the second tray, thereby improving the de-entrainment efficiency of the second and third trays. However, under these operating conditions, TBP would be refluxed, thereby introducing the possibility of insufficient TBP removal from the liquid. For this reason the de-entrainment tray(s) of the Purex Plant concentrators is operated dry.

B. URANIUM CONCENTRATION PROCEDURE

1. Normal Procedure

The uranium concentrators are designed to remove TBP from dilute uranium solutions and to concentrate those solutions from 9% UNH to 52-60% UNH. The succeeding discussion is based on performing these duties when processing ten tons of uranium per day by the HW #3 Flowsheet.

1.1 Steady-state operation

In normal operation, the uranium solution is jetted continuously to the concentrator via the stripping de-entrainment tower, is concentrated, and overflows continuously to the appropriate receiver. The TBP-stripping and de-entrainment functions of the tower are performed without specific controls, the liquid feed rate being determined by the controls of the adjacent C-type column and the vapor feed rate being controlled by the reboiler controls. So long as the feed rates are consistent and do not exceed the capacity of the equipment, the stripping and de-entrainment operations are automatically performed.

The steam-stripping of TBP from the uranium solution flowing across the bubble-cap trays is accomplished by the water vapor from the reboiler rising through the tower. The uranium solution effluent from the C-type column is jetted at about 35 gal./min. to the second-highest bubble-cap tray in the stripping column. The solution flows across each of the six stripping trays in turn, overflowing to the next-lower tray via liquid downcomers. Steam from the reboiler rises through the bubble-caps at about 15,300 lb./hr., volatilizes the TBP from the liquid, and carries it to the condenser where both vapors are condensed and routed to the caverns.

The uranium solution is concentrated in the reboiler and overflows to the receiver via the stilling chamber. Dilute uranium solution from the stripping tower enters the reboiler in the central section and mixes with the recirculating concentrated uranium solution. The resulting solution flows down through the center section to the bottom of the heat exchanger, is partially vaporized and jetted from the top of the steam-heated tubes, and is deflected back to the center section for recirculation. A portion of this solution flows to the stilling chamber, from which it overflows to the receiver at about 4.4 gal./min.

The rate of evaporation from the uranium solution is controlled by flowing steam to the reboiler at a rate controlled by a flow recorder-controller, the set point of which is continually readjusted by a recorder-controller which maintains a constant specific gravity of the reboiler contents (1.47 for HCU or ICU, 1.57 for 2EU Concentrator). This method of control permits the steam to establish whatever chest pressure is required by the immediate operating conditions of processing rate, tube fouling, etc., and is insensitive to the relatively large changes of evaporation rate with small changes of steam-chest pressure (see A3.2, above). Additional automatic controls are provided to prevent an overconcentration of UNH which could potentially cause a "freezing" of the concentrator or a rapid reaction between nitric acid and solvent reaction products. These controls include alarms and automatic interruption of steam supply as described below, the values quoted applying to the HCP, ICU, and 2EU Concentrators, respectively:

Weight-factor controls:

(a) An indicator light flashes on if the weight factor goes above 210, 214, or 228 inches of water.

(b) An indicator light flashes on if the weight factor drops below 190, 194, or 218 inches of water.

(c) The steam supply is shut off to both reboilers if the weight factor falls to 81.4, 83, or 85.5 inches of water, as sensed by a dip tube which terminates 40 inches from the bottom of the reboiler.

Steam pressure alarms:

(a) The steam supply is shut off to an individual tube bundle and 100 lb./sq. in. gage air is turned into the steam chest when the steam pressure of that tube bundle drops to 10 lb./sq. in. gage. This sequence prevents concentrate from being sucked into the steam chest through any leaks in the reboiler tubes.

(b) The steam supply is shut off to an individual tube bundle when the steam pressure to that tube bundle exceeds 29 lb./sq. in. gage (a safe margin below the arbitrarily adopted 30 lb./sq. in. gage maximum).

Temperature alarms:

(a) An indicator light flashes on if the temperature of the concentrate exceeds 121°C.

(b) The steam supply to both tube bundles is shut off and an indicator light flashes on if the temperature of the concentrate exceeds 129°C.

1.2 Start-up and shutdown

The uranium concentrators are started up and shut down in a manner minimizing the hydrolysis of TBP. This is accomplished by introducing the solvent-laden aqueous solution from the C-type column only when steam is rising through the stripper at a rate sufficient to strip the TBP from the liquid.

A uranium concentrator is placed in operation by the following procedure:

(a) The contents of the concentrator are adjusted so that it contains the equivalent of about 2700 gallons of UNH solution at the concentration desired during steady-state operation (about 52% for the HCP and ICU, 60% for the 2EU Concentrators). This solution is normally obtainable by jetting from the concentrate receiver.

(b) Water addition to the concentrator via the spray ring is started at about 7 gal./min. The specific gravity of the reboiler contents will decrease for about forty minutes as the reboiler contents are diluted by the water, then rise slowly as the solution is concentrated.

(c) Both steam flow controllers are placed on manual control and independent of the specific-gravity recorder-controller, and steam is started to one of the reboilers at about 6000 lb./hr., keeping the other reboiler at zero steam flow. The set point of the operating controller is adjusted to agree with the recorded steam flow and placed on automatic.

(d) When the specific gravity of the reboiler contents rises to the desired value, the set point of the specific-gravity controller is adjusted to coincide with the recorded specific gravity. The output of the specific-gravity controller is connected with the steam flow controller, permitting the set point of the steam flow controller to be reset by the specific-gravity controller.

(e) The interface controller of the associated C-type column is set on automatic and the extractant flow is started to that column at about 7 gal./min.

(f) The jet which raises the C-column effluent from the column to the stripper is turned on and the column let-down valve is opened by the interface controller. The water to the stripper spray ring is turned off.

(g) The extractant rate to the column is gradually increased to the flow rate desired by making incremental adjustments of 10% or less and permitting all of the controllers to stabilize (about one minute) before making the next adjustment.

(h) If two reboilers are required to obtain the desired boil-up rate, the extractant rate is increased until the rate of steam flow to the first unit is about 15,000 lb./hr. The manual loading station of the operating steam flow controller is adjusted to agree with the steam-valve loading pressure established by the instrument and placed on manual control. The control of the specific-gravity controller on the set point of the steam flow controller is interrupted and the set point of each steam flow recorder-controller is adjusted to deliver one half of the steam flow currently being delivered to the concentrator. As rapidly as possible, the rate of steam flow to the reboilers is manually readjusted so that the recorder pens coincide with the set points. Both steam flow recorders are placed on automatic and the control of the set points of the steam flow controllers is re-established by the specific-gravity controller. If the specific-gravity controller attempts to reset the steam flow rates more than 5% from the recorded flow rates, the specific-gravity set point should be readjusted as required to hold this readjustment to a 10% maximum. The specific-gravity set point is returned to the desired value when the controllers have stabilized.

The unit is shut down by the following procedure:

(a) The extractant flow to the C-type column is shut off, and the interface controller is placed on manual. The let-down valve is automatically closed by turning off the jet which raises the aqueous effluent to the stripper.

(b) The set point of the specific-gravity controller is gradually raised to 0.05 units above its normal set point, and the concentrator controls are permitted to turn off the steam by the automatic procedures activated when the steam-chest pressure falls below 10 lb./sq.in.

(c) The stripper tower is allowed to drain and the reboiler contents are jetted to the receiver, if desired.

2. Detection and Remedy of Off-Standard Conditions

2.1 Fouling of concentrator tubes

Partial loss of evaporation capacity, as evidenced by an increased steam pressure required to maintain a given product composition, may be an indication of reduced heat-transfer coefficients due to scale formation in the tubes. If this condition becomes so severe that the desired concentration capacity is not available at safe steam pressures, the offending concentrator may be cleaned. In this operation, the concentrator is shut down, drained, and flushed thoroughly with water; scale-dissolving nitric acid solution (nominally 60%) is added via the spray ring in the top of the unit and recirculated by boiling. Such an operation would require a jumper in the Operating Gallery from either the Nitric Acid Header or the Utility Addition Tank Header to the demineralized water line going to the spray ring. After heat-transfer rates have been re-established, feed may be re-admitted to the concentrator without removing the acid solution.

2.2 Failure of feed supply to concentrators

A failure of feed supply to the concentrators could cause an overconcentration of the UNH, and may be detected by a sudden decrease in weight factor coupled with a sudden increase in specific gravity of the reboiler holdup. Even if the specific-gravity controller failed to function properly, such an overconcentration would normally be detected before the safety devices shut off the steam (a matter of 15 to 30 minutes). In such a case the steam should be shut off and the concentrator shut down until such time as restoration of the feed supply can be made.

2.3 Overconcentration of UNH

If the UNH feed rate to a concentrator is reduced appreciably from a normal flow without a compensating reduction of steam flow, the uranium solution in the reboiler becomes more concentrated than normal, possibly to the point of "freezing" or incipient calcination. Overconcentration may be detected by an increasing concentrate temperature as indicated by the temperature recorder or by an increase in specific gravity as indicated by the specific-gravity recorder-controller. Safety devices are provided to prevent this condition from becoming extreme and are discussed under B1.1. The condition may be corrected, if it has not proceeded too far, by increasing the rate of feed addition or by reducing the steam pressure and adding water if the feed rate is very low. If overconcentration should result in the scaling of the tubes or freezing of the solution, the unit must be cleaned out as described under B2.1, above.

2.4 Excessive uranium or plutonium losses in process condensate

Excessive entrainment losses of products to a condensate stream result if the concentrator is operated at too high a boil-up rate or if a de-entrainment tower becomes partially plugged. Either of these conditions results in a high vapor velocity in the de-entrainment column which may cause losses greater than the 0.01% desired from the HCP Concentrator or 0.1% from the others. Such losses would be indicated by high readings on the condensate radiation recorder. If high readings on the radiation recorder occur, the boil-up rate should be reduced and the feed rate cut back. A high radiation-recorder reading obtained under operating conditions previously satisfactory indicates that the bubble-cap trays or packing in the column may be partially plugged. In such a case the concentrator should be shut down and the column washed down with water introduced via the spray ring at the top of the tower or boiled out with nitric acid as described in B2.1 above. If neither method is successful, the packing and bubble-cap trays must be removed and cleaned or replaced.

2.5 Insufficient stripping.

Inadequate solvent removal in the steam stripping operation may cause high product losses, poor decontamination, or foaming in subsequent processing steps, and removes one of the safety factors against a rapid nitric acid-solvent reaction in the concentrators. Insufficient stripping may occur when

(a) flooding of the C-type columns or excessive organic entrainment in the HCP, ICU, or 2EU introduces abnormal amounts of solvent to the concentrators, (b) loss of steam flow to the concentrator reboiler reduces steam flow to the stripping section, (c) excessive heat losses from the de-entrainment section cause reflux which returns TBP to the feed tray, or (d) the use of the alternate feed entry on the fourth tray provides too few stages for TBP removal. Off-standard C-type column operation is detected and remedied as outlined in Chapter VI. Loss of steam flow to the stripping section occurs if the steam flow to the reboiler is lost by automatic shutdown due to overconcentration or by mechanical failure of the steam line, valves, or instruments. Should the steam flow to the concentrator be interrupted, the feed stream should be shut off until such time as restoration of the steam supply can be made. The reflux of condensate by heat losses from the de-entrainment section could return TBP to the feed plate when using the lower feed-inlet point, when operating at very low rates, or through the partial loss of insulation from the tower. The lower feed-inlet point provides less certainty of obtaining the desired removal of TBP and should be used only when the use of the upper feed-inlet feed jet does not meet capacity requirements.

C. CONCENTRATION OF PLUTONIUM SOLUTIONS

1. General

Decontaminated plutonium solution from the 2B Column is concentrated to a small volume, packaged, and shipped to the 234-5 processes. The concentration of plutonium solution is accomplished by a continuous-concentration facility called the Plutonium Concentration Assembly, while the packaging is accomplished in the Product Removal Room. In the Concentration Assembly, located in L Cell of the Purex Plant, the plutonium concentrators and their auxiliary equipment are supported by common dunnage and are interconnected with contact flanges. The assembly consists of the Plutonium Stripper, T-L3; the No. 1 Plutonium Concentrator, E-L4; the No. 2 Plutonium Concentrator, E-L7; and the Plutonium Receiver, TK-L6. Each equipment piece can be maintained by contact methods, or the complete assembly can be remotely disconnected and removed. The load-out facilities are located in the Product Removal Room on the north side of L Cell, and consist of the Vacuum Tank, TK-L11; the Plutonium Sampler Tank A, TK-L9; the Plutonium Sampler Tank B, TK-L10; the PR Head Tank; and the PR Can. The vessels and auxiliaries in the Plutonium Concentration Assembly are described in Subsections C3 and C4, below, and in more detail in Chapter XIII. A description of the Plutonium Removal Room and its equipment is given in Subsection C5, below, and in greater detail in Chapter XI.

The Plutonium Concentration Assembly strips and concentrates 540 gallons of 2BP per day (5.1 kg. Pu/day when processing 600 megawatt-day/ton U at 10 t/day) The Plutonium Stripper effects a two-fold volume reduction as it steam strips TBP from the entering feed. The No. 1 Plutonium Concentrator receives the partially concentrated, TBP-free plutonium solution from the stripper and, with approximately a 15-fold volume reduction, produces the final plutonium concentrate which is collected in the Plutonium Receiver. The plutonium concentrate is then transferred batchwise to the Product Removal Room where it is sampled and loaded into PR Cans in 5 to 8 liter batches, each containing approximately

400 to 600 grams of plutonium. The No. 2 Plutonium Concentrator was originally provided to re-evaporate the condensate from the No. 1 Plutonium Concentrator. This condensate is normally recycled to the IAF Tank, however, and the No. 2 Plutonium Concentrator is on stand-by. The No. 2 Plutonium Condenser (E-18) is used to condense the vapors from the Plutonium Stripper.

The plutonium concentration and loading operations are conducted in equipment designed against a slow-neutron chain reaction on the "safe-geometry" principle, discussed in Chapter XXIII.

The plutonium concentration step could be eliminated in the Purex process by adopting the plutonium reflux flowsheet discussed in Chapter IV. With such a flowsheet, the 2BP containing approximately 55 g. Pu/l. by-passes the stripper and concentrators and flows directly to the Plutonium Receiver, TK-16. Subsequent plutonium-handling procedures would remain unchanged. The by-passed Plutonium Concentration Assembly could be modified to permit the concentration of the 2AW by installing a larger concentrator and by revising the stripper to permit the introduction of live steam into the stripping section. In this operation, no volume reduction would be accomplished in the stripper, the 2AW concentrator receiving the organic-free 2AW and, with approximately a 3-fold volume reduction, producing a concentrate for recycle to the IAF Tank. The condensate from the stripper and concentrator would be routed to the Acid Accumulator (TK-F10).

2. Properties and Compositions of Solutions

2.1 Variation of plutonium concentration with megawatt-days/ton

The plutonium content of the irradiated uranium varies with the integrated pile-exposure level (megawatt-days/ton) of the fuel. Since the 2BP volume per ton of uranium processed is independent of the exposure level of the uranium, the plutonium concentration in the 2BP varies with the exposure level. This variation requires a varying degree of concentration of the 2BP in order to produce a constant plutonium concentration of 75 g./l. in the concentrate. The following table summarizes pertinent data concerning the plutonium concentration steps as a function of the exposure level.

Basis: 540 gallons 2BP/day (10 tons of uranium by HW #3 Flowsheet).

PR Cans contain an average of 400 grams Pu at 75 g./l.

Exposure Level, MWD/T	Enrichment Level, Grams Pu/ Ton of U[a]	Pu Rate, Grams/Day	Average Pu Conc. in 2BP, Grams Pu/L.[b]	Over-All Volume Reduction	Number of PR Cans Filled/Day
100	100	1000	0.49	153/1	2.5
215	200	2000	0.98	76/1	5.0
300	274	2740	1.35	55/1	6.8
400	358	3580	1.75	43/1	8.9
500	437	4370	2.14	35/1	10.1
600	514	5140	2.52	30/1	12.8
900	722	7220	3.54	21/1	18.0

Notes: (a) Based on original Hanford piles.

[redacted] (b) Uncorrected for losses earlier in process.

[redacted]

2.2 Physical properties and compositions

Tabulated below are typical concentrations of the important components, and the physical properties of the plutonium solution before and after concentration. A variation in plutonium concentration in the irradiated slugs, a variation in uranium-processing rates, and/or changes from HW #3 Flowsheet operating conditions would cause deviations from the figures tabulated below.

TYPICAL STREAM DATA

Basis: Operation at 514 g. Pu/ton U level at 10 ton U/day under HW #3 Flowsheet conditions.

Stream	2BP	PSC	Concentrate
Component:			
Pu, g./l.(a)	2.2 to 2.7	4.5 to 5.5	68 to 82
HNO_3, M	0.18 to 0.22	0.36 to 0.44	2.5 to 3.1
Fe^{+3}, g./g.(b)			<0.02
Cr^{+3}, g./g. Pu(b)			$<4 \times 10^{-3}$
Ni^{+2}, g./g. Pu(b)			$<2 \times 10^{-3}$
Na^{+}, g./g. Pu(b)			2×10^{-4}
SO_4^{-} (as Na_2SO_4), g./g. Pu(b)			1×10^{-3}
Silica (as SiO_2), g./g. Pu(b)			3×10^{-3}
Ca^{+2}, g./g. Pu(b)			2×10^{-4}
Mg^{+2}, g./g. Pu(b)			1×10^{-4}
Cl^{-}(as NaCl), g./g. Pu(b)			2×10^{-4}
UNH, g./g. Pu(c)	0.001	0.001	0.001
Property:			
Specific gravity at 25°C.	1.00 to 1.01	1.01 to 1.02	1.13 to 1.17
Boiling point, °C.	100	100 to 101	105 to 108
Freezing point, °C.	0 to -1	-1 to -2	-11 to -13
Viscosity at 25°C., cp.	1.0	1.0	1.5
Radioactivity from Fission Products:			
Gross beta plus gamma curies/g.	1.6×10^{-5}	1.6×10^{-5}	1.6×10^{-5}

Notes: (a) The plutonium is present mostly (ca. 90%) in the IV valence state. The remainder is in the VI state.

(b) Values given are order-of-magnitude estimates of the expected impurity concentrations, based on available solubility data, probable total impurity content, and demineralized-water specifications. Demineralized water enters the plutonium product stream via the 2BX stream.

(c) Desired upper limit. (1/5 of maximum permitted by specifications.)

The physical properties of the plutonium solutions depend almost entirely upon the nitric acid concentration since, except for the final concentrate, the plutonium concentrations are extremely low. Even in the final concentrate, the plutonium concentration has only a slight effect upon the physical properties. This is illustrated by the freezing points listed in the table above, where the values noted are essentially those of aqueous solutions containing only nitric acid in the indicated concentration. As with the freezing point, plutonium has little effect upon the boiling point of plutonium-nitric acid solutions in the concentration ranges encountered in the Purex Plant. As illustrated in Figure VII-2, decreasing the plutonium concentration of the final concentrate from 75 g./l. to 50 g./l. while maintaining the acid concentration at 3 M would decrease the boiling point by less than 1°C.

In order to obtain optimum conditions in subsequent processing at 234-5, the weight ratio of nitric acid to plutonium in the concentrate must be less than a specified value. This limit is shown graphically in Figure VII-3, which gives the maximum nitric acid-to-plutonium weight ratio that can be tolerated at any given plutonium concentration as Line A, and the nitric acid-to-plutonium weight ratio preferred maximum as Line B. When the overheads from the No. 1 Plutonium Concentrator are recycled to the IAF Tank, the nitric acid-to-plutonium weight ratio of the plutonium concentrate from the Purex Plant is about 2.4, which is well below Line B. If the No. 2 Acid Concentrator were used to re-evaporate the condensed overheads with subsequent recycle of the bottoms to the No. 1 Plutonium Concentrator, the nitric acid-to-plutonium ratio would be 3.7, which is also below Line B. In either case, the plutonium concentrate produced in the Purex Plant is acceptable as feed for the 234-5 processes.

2.3 Chemical behavior

Plutonium in the concentrators has a valence of four (Pu^{+4}) or six (PuO_2^{+2}). Pu^{+4} may be associated with up to six nitrate ions in ionic complexes; PuO_2^{+2} may be complexed with up to two nitrate ions. The plutonium nitrates are very soluble in high concentrations of nitric acid, plutonium (IV) nitrate concentrations as high as 1200 g./l. in 1.7 M nitric acid having been reported.(2) In plutonium nitrate solutions having a low concentration of nitric acid, the plutonium (IV) nitrate may partially hydrolyze

to plutonium hydroxide which may polymerize to form a complex molecule of high molecular weight. This Pu(IV) polymer is a positive colloid. Depolymerization may be accomplished by increasing the nitric acid concentrations to 6 M and heating at 90°C. for one hour.(2) The region in which partial hydrolysis or polymer formation can occur is shown in Figure VII-2. These data indicate that polymer formation is possible in dilute (2 to 5 g. Pu/l.) plutonium solutions only at nitric acid concentrations below 0.1 M, or in concentrated (75 g. Pu/l. or greater) plutonium solutions at nitric acid concentrations below about 1.2 M. Once the polymer has formed in this region, it can be precipitated at the elevated temperatures of the Plutonium Concentrators. However, the concentration of nitric acid in the plutonium concentration operation is sufficiently high that no problem due to polymer formation or hydrolysis is anticipated. A further discussion of plutonium (IV) polymer can be found in Chapter IV.

Both dissolved and entrained TBP is present in the 2BP stream, the TBP being removed from the 2BP stream by steam stripping in the Plutonium Stripper. This preventive measure minimizes the possibility of red oil formation or a rapid nitrate ion-TBP reaction in the Plutonium Stripper or Concentrators.

3. Plutonium Stripper

3.1 Description

The Plutonium Stripper, T-L3, steam strips TBP from the plutonium solution prior to its concentration. A partial concentration of the plutonium solution is also performed, the water vapor arising from the evaporation being used as the stripping agent for the TBP. A drawing of the unit showing its main features appears in Chapter XIII, and its process connections and instrumentation are shown schematically in Chapter VI.

The Plutonium Stripper, T-L3, is a unit 28 feet high and consists of three sections: (a) a vertical-tube reboiler at the bottom; (b) a middle stripping section containing eight feet of one-in. Raschig rings; and (c) a top liquid-de-entrainment section which is actually two parallel sections 5 ft. apart, each containing three feet of one-inch Raschig rings. The two parallel de-entrainment sections provide the cross-sectional area required for vapor-liquid de-entrainment in a nuclearly safe geometry. The reboiler is a thermal recirculation unit and consists of a steam-heated, vertical-tube heat exchanger mounted in parallel with the bottom nine feet of the tower which serves as the downcomer and vapor-liquid disengaging space. The reboiler unit has a normal liquid holdup of about 11 gallons and contains 20.4 sq. ft. of heat-exchange surface designed for a heat duty up to 212,000 B.t.u./hr. Process connections include a feed entry at a distributor plate at the top of the stripping section, a vapor line from the top of the de-entrainment sections to the No. 2 Plutonium Condenser (E-L8), and a line for carrying the stripped plutonium solution from the reboiler to the reboiler of the No. 1 Plutonium Concentrator. The two reboilers are so installed that the weights of solutions in the two reboilers are equalized through the connecting line. Steam is supplied under instrument control to the reboiler up to 30 lb./sq. in. gage, and lines are provided for the addition of demineralized water and chemicals from the Utility Addition Tank Header. Standard instruments record and control pertinent process measurements as described in Chapter VI and under C3.3, below.

3.2 Steam stripping

TBP is steam stripped from the entering plutonium feed solution as it flows down through the center packed section into the lower disengaging section of the column. A description of the mechanism of TBP steam stripping is given in Subsection A3, above. The steam for the stripping operation is provided by the partial concentration of the stripped plutonium solution in the vertical-tube reboiler. It is estimated that an L/V flow ratio of 2 will strip the TBP in the liquid to less than 0.01 g. TBP/l. as it passes through the stripping section which contains eight feet of Raschig rings.

3.3 Concentration

In conjunction with the stripping operation, the entering plutonium solution is concentrated to about one-half its original volume in the reboiler of the Plutonium Stripper. The plutonium solution from the stripping section mixes with the recirculating plutonium solution in the downcomer of the reboiler and is concentrated and recirculated by the same mechanism as that described under A3.2, above. The vapor-liquid mixture jets from the reboiler tubes and is angled downward into the downcomer by the connecting pipe. The steam turns and rises upward through the stripping section while the liquid continues downward through the downcomer for recycle or for withdrawal to the Plutonium Concentrator. The stripper reboiler is interchangeable with those used in the Plutonium Concentrators and is designed for a maximum boil-up rate of 220 lb./hr., but the flooding vapor velocity in the stripper tower is exceeded at that rate. The stripper normally operates at a boil-up rate of 116 lb./hr., which corresponds to a vapor velocity through the stripping column of 3.5 ft./sec.

3.4 De-entrainment

Entrained droplets of plutonium solution must be removed from the overhead vapors during the stripping operation in order to minimize plutonium waste losses in the condensate stream. The parallel upper packed sections de-entrain these droplets from the rising vapors by impingement of the drops on the packing, the separated liquid draining back to the stripping section. The vapors are then totally condensed and routed through the acid recovery system to minimize the quantity of plutonium leaving the Plant via the condensates. Any plutonium present in the stripper condensate is eventually lost in the neutralized waste. The maximum permissible economic loss of plutonium in the condensate has been estimated at 0.01%, which corresponds to a feed-to-condensate de-entrainment factor of 10^4. It is expected that this requirement can be met up to superficial vapor rates of about 6 ft./sec., which corresponds to a processing rate of 18 tons uranium per day when using the HW #3 Flowsheet.

4. Plutonium Concentrators

4.1 Description

The Plutonium Concentrators, E-L4 and E-L7, are essentially the same

as the Plutonium Stripper with the stripping section of the unit omitted. The No. 1 Plutonium Concentrator performs the final concentration of the plutonium product stream while the No. 2 Concentrator may be used to minimize plutonium losses by entrainment from the No. 1 Concentrator if the recycle of this condensate to the IAF becomes impracticable. A drawing of the units showing the main features appears in Chapter XIII, while the process connections and instrumentation are shown schematically in Chapter VI.

The No. 1 Concentrator is 24 feet high and consists of three sections: (a) a reboiler section at the bottom; (b) a middle vapor-liquid disengaging section; and (c) a top liquid-de-entrainment section in the form of two parallel sections 4 ft. apart, each containing seven feet of 1-in. Raschig rings. The tops of the de-entrainment sections are connected by a common vapor line with the No. 1 Plutonium Condenser, E-L5, which contains 10 sq. ft. of condensing surface (water side). The reboiler has a normal liquid holdup of about 11 gallons and contains 20.4 sq. ft. of heat-transfer surface designed for a heat duty up to 212,000 B.t.u./hr. The line from the stripper to the No. 1 Plutonium Concentrator interconnects the bottoms of the reboilers and permits the weights of solutions in the two reboilers to equalize. A demineralized-water line and a chemical wash line from the Utility Addition Tank Header are provided above the de-entrainment packing for periodic wash-down. An electrical cycle timer controls the rate of intermittent concentrate withdrawal by actuating an air-operated valve in the concentrate line.

The No. 2 Plutonium Concentrator is identical to the No. 1 Concentrator except for the parallel de-entrainment sections. The two parallel sections are shorter and contain only four feet of packing, giving an over-all column height of 21 ft. The vapor outlet at the top of the column is connected to the No. 2 Plutonium Condenser, E-L8, while the concentrate line is connected with the reboiler of the No. 1 Plutonium Concentrator.

4.2 Concentration

The plutonium solution from the stripper is concentrated to about 1/15 of its volume (about 1/30 of the 2BP volume) in the vertical-tube reboiler. The plutonium solution from the stripper enters the line between the reboiler and the downcomer, mixes with concentrated solution from the downcomer, and enters the reboiler. By the same mechanism as that described under A3.2, a portion is vaporized and the vapor-liquid mass is jetted from the tubes into the line between the reboiler and column. The line is turned so that the mass enters the disengaging section in a downward direction to aid in vapor-liquid disengagement. The steam rises through the de-entrainment sections while the liquid passes downward through the downcomer for recycle or for withdrawal to the Plutonium Receiver. The vapor from the de-entrainment section is totally condensed; the condensate is normally recycled to the IAF Tank, but may be re-evaporated in the No. 2 Plutonium Concentrator if desired. The concentrator reboilers are identical and are designed for a maximum duty of 212,000 B.t.u./hr., although the normal boil-up rate is only 88 lb./hr.

The operation of the No. 1 Plutonium Concentrator is essentially that of a one-plate still. Using the nomenclature shown in the sketch on Figure VII-4,

a material balance equation for HNO_3 can be written by equating the influent and effluent flows of HNO_3. Solving for Y_v gives:

$$Y_v = (F/D)X_f - (L/D)X_p \quad \text{.....(4)}$$

which represents the operating line for the unit. This equation is plotted on Figure VII-4, with values compatible with the HW #3 Flowsheet substituted for the flow ratios and feed composition. Also plotted are the equilibrium concentrations of nitric acid in a vapor which is in contact with a boiling aqueous solution of nitric acid and plutonium nitrate of varying concentrations. The intersection of the operating line with the equilibrium line for a plutonium concentration of 75 g./l. establishes the nitric acid concentrations of the condensate and concentrate for the conditions assumed. If the plutonium in the concentrate were more dilute, the nitric acid concentrations in the condensate and concentrate could be estimated by interpolation between the equilibrium parameters shown. If a different degree of evaporation or acid concentration of the feed is assumed, a new operating line must be constructed to evaluate the new conditions.

4.3 De-entrainment

Since the condensed overheads from the No. 1 Plutonium Concentrator are recycled to the IAF Tank during normal operation, plutonium losses by entrainment in the vapor stream are of little concern. However, should the alternate operation be employed in which the condensate from the No. 1 Plutonium Concentrator is re-evaporated in the No. 2 Plutonium Concentrator, any plutonium lost in the condensate from the second concentrator would eventually be lost in the neutralized waste. In such a case, economics would establish the maximum desirable plutonium loss in the condensate from the second concentrator at about 0.01% of that present in the No. 1 Concentrator feed stream.

5. Product Sampling and Packaging

The product sampling and packaging equipment consists of a Vacuum Tank, TK-L11; the Plutonium Sampler Tank A, TK-L9; the Plutonium Sampler Tank B, TK-L10; the PR Head Tank; and the PR Can. These facilities are grouped in the contact-maintained Product Removal Room on the north side of Cell L. All the vessels and valves in the PR Room are totally enclosed in ventilated, stainless-steel hoods with removable Lucite front panels. A similar-type hood is also provided for the decontamination of PR Cans. All valves in lines handling the plutonium solution are air-operated to permit remote operation. The load-out hood is divided physically into two sections. The upper or "hot" section contains the PR Head Tank, valves, flexible transfer line, and drip cup. The lower or "cold" section contains the PR Can during the filling operation. A detailed description of the Product Removal Room is given in Chapter XI, while the load-out vessels are described in Chapter XIII.

The PR Can is a cylindrical, stainless-steel vessel having a capacity of 2.7 gallons and is used to transport the concentrated plutonium solution to

the 234-5 Building. When being stored or transported inside the building, the PR Can is contained in a carrier vessel. For transportation between buildings, both of these vessels are contained in a special truck-mounted carrier. The PR Can is top-filled through a hole which is closed with a clamp-operated polythene stopper during transportation. The PR Can is equipped with lifting trunnions and the carrier vessel with a lifting eye for engaging hoist hooks. A complete description of the PR Can is contained in Chapter XIII.

D. PLUTONIUM CONCENTRATION PROCEDURE

1. Critical Mass Control

All of the vessels in the Plutonium Concentration Assembly and in the Plutonium Removal Room employ safe geometry (safe cylinders) for critical mass control. This method involves the handling of the plutonium solutions in isolated equipment of such size and shape that enough free neutrons escape to prevent criticality under any foreseen conditions. In the Purex Plant a safe cylinder (column) is specified as one which is not more than 7 inches in diameter and is spaced at least 2 feet away from any other plutonium-containing equipment. Any cylinder is limited to a 5-inch diameter for at least 2 feet adjacent to a bend or attached piping. The plutonium-handling vessels are all constructed of right-circular cylinders which meet the above specifications. A more detailed explanation of critical mass control in these vessels can be found in Chapter XXIII.

2. Normal Procedure

The procedure described below applies to the concentration and packaging of plutonium resulting from the processing under HW #3 Flowsheet conditions of 10 tons of uranium per day at a plutonium level of 514 grams per ton (600 MWD/T). Modifications of flowsheet and/or processing rate may be compensated for by minor modifications of the procedures outlined. A PR Can batch contains approximately 400 grams of plutonium, the number of PR Cans loaded per day being determined solely by the rate of plutonium isolation.

2.1 Stripping and concentration

In normal operations, plutonium solution from the 2B Column is stripped of TBP, concentrated to the desired concentration, and collected in the Plutonium Receiver. These operations are performed continuously under instrument control as described below.

In the Plutonium Stripper the plutonium solution is stripped of TBP and concentrated to one half of its original volume. The 2BP flows by gravity from the 2B Column to the top of the stripping column and flows down through the packing at a nominal rate of 22 gallons per hour, the rate being controlled by the 2B Column controls. Steam, formed by the partial concentration of the stripped solution in the reboiler, rises through the packing at a nominal rate of 116 lb./hr. This steam vaporizes the solvent from the liquid and carries it to the No. 2 Plutonium Condenser, the condensates being routed to the acid accumulator.

The stripped and partially concentrated plutonium solution then flows by gravity to the No. 1 Plutonium Concentrator for additional volume reduction. The rate of evaporation in the Plutonium Stripper is controlled to effect a volume-reduction factor of two across the unit. The rates of liquid flow from the 2B Column and from the Plutonium Stripper are measured and recorded; a flow-ratio controller maintains the ratio of these flows at two by controlling the set point of the steam flow controller admitting steam to the stripper reboiler.

The concentrate from the stripper is further concentrated in the No. 1 Plutonium Concentrator to about 3% of the original 2BP volume, the concentrate being collected intermittently in the Plutonium Receiver. The rate of evaporation is controlled by a weight-factor controller which controls the set point of a steam flow controller admitting steam to the concentrator reboiler. Concentrated plutonium solution is withdrawn to the Plutonium Receiver intermittently through a cycle-timer-controlled valve which permits a flow rate of about 0.0042 gal./sec. for fifteen seconds every five minutes. The cycle timer is reset as required to match variations in plutonium production rates. The condensate from this concentration is normally routed at a nominal rate of 88 lb./hr. to the IAF Tank so that any plutonium content is routinely recovered. If, for any reason, this recycle should become inadvisable, the condensate may be rerouted to the No. 2 Plutonium Concentrator for re-evaporation. In this case, most of any plutonium content is returned to the No. 1 Plutonium Concentrator in a concentrate of approximately 5% of condensate flow rate; the balance of the condensate is re-evaporated, condensed in the No. 2 Plutonium Condenser, and routed to the Acid Accumulator. The operating controls for the two Plutonium Concentrators are identical.

The Plutonium Stripper and Plutonium Concentrators have an extensive control system to prevent the overconcentration of plutonium solutions or the possibility of a rapid nitrate ion-TBP reaction. This system includes both weight-factor and steam pressure controls. The steam pressure controls are identical on all three units and perform as follows: (a) the steam supply is shut off, an alarm light flashes on, and 100 lb./sq. in. gage air is turned into the steam chest when the steam-chest pressure drops below 10 lb./sq. in. gage; and (b) the steam supply is shut off and an alarm light flashes on when the steam pressure exceeds 29 lb./sq. in. gage. The weight-factor control on each unit shuts off the steam supply and flashes an alarm light when the weight factor falls to 70 inches, 81 inches, or 77 inches in the Stripper, No. 1 Concentrator, or No. 2 Concentrator, respectively. In each case the actual liquid level is the sum of the weight factor divided by the specific gravity plus 20 inches (the distance from the bottom dip tube to the tank bottom).

2.2 Concentration start-up and shutdown

The Plutonium Stripper and No. 1 Plutonium Concentrator are started up as described below:

(a) Approximately 3 M nitric acid is added to the stripper and concentrator reboilers via the chemical addition line until the weight factor approximates 75 inches in the stripper.

(b) Then water is added to the stripper via the chemical addition line at approximately 0.1 gal./min.

(c) The stripper-steam flow controller is placed on manual and the control of the ratio controller over the steam flow-controller set point is blocked out. Steam is started to the unit at about 75 lb./hr. The steam-flow set point is manually set at this value and switched to automatic. The weight factor in the units will rise slowly at first, then fall slowly as the unit reaches equilibrium temperatures.

(d) When the weight factor returns to about 75 inches, the 2BX is started at about 0.1 gal./min. and the 2B interface controller is placed on automatic.

(e) The No. 1 Concentrator steam flow controller is placed on manual and the control of the concentrator weight-factor controller over the set point of the concentrator steam flow controller is blocked out. Steam is started to the unit at about 75 lb./hr. The controller set point is manually set at this value and switched to automatic. Again, the weight factor in the units will rise slowly, then fall as the unit reaches equilibrium temperatures.

(f) When the weight factor of the concentrator reaches the desired value, the weight-factor controller is switched on automatic and its control over the set point of the steam flow controller is established.

(g) As rapidly as possible, the 2BX flow rate is doubled, the water flow to the stripper is shut off, and the control of the 2BP controller is established through the ratio controller on the set point of the stripper-steam flow controller.

(h) The 2BX flow rate is increased incrementally to the desired value by making changes of 10% or less and permitting the controllers to stabilize (about one minute) before making the next adjustment.

The units are shut down as follows:

(a) The stripper-steam flow controller is placed on manual at the current steam flow rate.

(b) The 2B let-down valve is placed on manual control, the 2BX flow is turned off, and the let-down valve is closed.

(c) One minute later, the steam to the stripper is turned off.

(d) The automatic controls are allowed to turn off the steam to the No. 1 Plutonium Concentrator.

(e) If the shutdown is of short duration, the contents of the reboilers can be left in the units. If the shutdown is to be an extended one,

the contents are loaded out into PR Cans or recycled to the IAF Tank. Criticality considerations involved in adding Pu to U-Pu solutions are discussed in Chapter XXIII.

2.3 Product sampling and packaging

The sampling and packaging of plutonium solutions is accomplished by a series of operations conducted batchwise. Approximately 40 liters of concentrated plutonium solution from the Plutonium Receiver is transferred to one of the Plutonium Sampler Tanks by drawing a vacuum on the sampler tank via the Vacuum Tank. In each sampler tank the solution is thoroughly mixed by recirculating the sampler tank contents through a pump which discharges the solution to the sampler tank through a perforated pipe approximately the length of the tank. After recirculation for about 20 minutes, a sample is withdrawn by a syringe-type sampler and submitted for product concentration and purity analyses. From the sampler tanks the solution is transferred in approximately 5.4-l. batches by gravity flow to the calibrated pyrex PR Head Tank. The PR Can in its carrier vessel is brought to the Product Removal Room from the building load-out dock on a dolly. The PR Can is then lifted from the carrier vessel by an electric monorail hoist, carried to the bottom section of the load-out cage, and positioned beneath the stand pipe leading through the shield to the upper section of the load-out cage containing the calibrated pyrex PR Head Tank. A flexible stainless-steel hose connected to the head tank is passed through the stand pipe to the PR Can. The valve in the hose is opened and concentrated plutonium solution is transferred by gravity into the PR Can. A batch volume of 5.4 liters, as determined by analysis and batch size desired, is measured in the calibrated head tank and added to the PR Can. The can is then stoppered and removed to the decontamination hood where it is surveyed and decontaminated as required. It is then removed from the decontamination hood, weighed for accountability, and placed in the carrier vessel. It is estimated that the time required for the sampling and packaging operation of a single batch (40 l.) will be about 7 to 14 hours.

3. Detection and Remedy of Off-Standard Conditions

3.1 Off-standard plutonium product solutions

Plutonium-product solutions failing to meet the specifications for uranium or fission-product content are detected in the Plutonium Sampler Tanks before the solution is loaded. Upon detection, such solutions are drawn back into the Vacuum Tank and jetted to the HAF Tank via a 3-gal./min. water jet (J-L11-2). Any solution spilled through leaks or while filling the PR Can is collected in sumps beneath the hoods, and is drawn into the Vacuum Tank and returned to the HAF Tank as described above. Following such a transfer of an off-standard solution, the Vacuum Tank is flushed with demineralized water or dilute nitric acid prior to reuse.

3.2 Insufficient stripping

The inadequate removal of solvent in the steam stripping operation may

cause an accumulation of TBP hydrolysis products in the plutonium concentrate and removes one of the safeguards preventing a rapid nitrate ion-TBP reaction in the plutonium concentrators. Insufficient stripping is possible when (a) abnormal amounts of solvent enter the stripper with the 2BP either through emulsification or flooding in the 2B Column, or (b) a reduced steam flow to the stripper results from abnormal reboiler operation. Off-standard 2B Column operation is detected and remedied as outlined in Chapter VI. Steam flow to the reboiler can be lost by automatic shutdown due to overconcentration or by mechanical failure of the steam line or instruments. In such a case, the TBP-containing 2BP stream should be stopped by shutting down the solvent-extraction batteries or, should the shutdown be of short duration (say a few hours), it can be allowed to pass through the stripper without steam stripping until such time as stripper operation can be restored. During such short intervals of insufficient stripping, TBP hydrolysis products are present in the plutonium concentrate but are not expected to affect subsequent processes.

3.3 Excessive plutonium losses in process condensate

Plutonium losses in the condensates from the stripper or the No. 2 Plutonium Concentrator exceeding 0.01% of the feed may be incurred if they are operated with (a) an excessively high boil-up rate, or (b) the column packing partially plugged with solids. Either of these conditions may cause high entrainment losses and/or flooding, and is indicated by abnormally high readings on the differential-pressure indicators or on the beta-gamma monitor in the condensate line from the No. 2 Plutonium Condenser. Should high differential pressure or high beta-gamma readings occur, the boil-up rate in the stripper and concentrators should be lowered and the feed rate to the stripper cut back in order to reduce the vapor velocity. If necessary the column packing should be freed as indicated under 3.4 below.

No provisions are made for returning plutonium-contaminated condensate to the concentrators; the plutonium is recovered from the acid recovery system by recycling the 2WW to the Centrifuge Feed Tank, TK-E3, if enough plutonium is present to make recovery economical.

3.4 Plugging of column packing

Plugging of the packing in any of the columns is very unlikely as the stripper and concentrator solutions are normally far from the saturation point and any solution in contact with the packing has little tendency to deposit solids upon it. Periodic washdowns tend to remove any solids that deposit before they can plug the packing. Should the packing become partially plugged, the solids may be removed by washing down the packing by water or chemical solutions added at the top of the stripper or concentrator de-entrainment columns or by boiling 60% HNO_3 in the unit for an hour or so. If neither method is successful, the column must be removed and the packing dumped and cleaned or replaced with new packing.

3.5 Overconcentration

Overconcentration in the stripper or either concentrator may be detected

by (a) an increasing concentrate temperature as indicated by the temperature recorders in the units, (b) an increase in specific gravity as indicated by the specific-gravity recorders, or (c) a decrease in the weight factor as indicated by the weight-factor recorder-controller. The condition may be corrected, if it has not proceeded too far, by reducing steam pressure, increasing feed flow, and/or diluting the concentrator contents with demineralized water from the addition line. If overconcentration should proceed to the point where scaling or "freezing" of the solution takes place, the unit should be cleaned out as described under D3.6, below. Overconcentration in these vessels is extremely unlikely, this condition being guarded against by the instrumentation described under D2.1, above.

3.6 Plutonium holdup in vessels

A precipitation of plutonium compounds in the concentrator vessels could result from abnormal processing conditions such as (a) nitric acid concentrations of less than 0.1 M in the 2BP feed stream, or (b) extreme overconcentration of the plutonium solution. Nitric acid concencentrations of less than 0.1 M might result if the 2B Column and the stripper-concentrator assembly were operated several hours with the 2A Column inoperative, but is unlikely under other conditions. It is extremely unlikely that a precipitation due to overconcentration can occur due to the safeguards outlined under 2.1, above. Since a gradual plutonium holdup might not be detected by a plutonium material balance made on the basis of 2BP samples and Product Removal Room samples, the vessels should occasionally be boiled out by adding nitric acid solution (nominally 60%) to the top of the stripper or concentrators through the chemical wash line and recirculating the solution by boiling. The acid solution may then be transferred to the Product Removal Room Sampler Tanks, sampled, and either recycled to the HAF Tank or loaded into PR Cans as dictated by its composition.

REFERENCES

(1) L. C. Amos, Informal communication re heat-transfer coefficients in HCP concentration. H.A.P.O. March, 1955.

(1a) L. Schefner and M. B. Jacobs, The Handbook of Solvents, D. Van Nostrand Co., Inc., New York (1953).

(2) DP-25 TNX Evporator Incident. J. T. Colvent, Jr., G. M. Nichols, and T. M. Siddall. 5-15-53.

(3) HW-18700 Redox Technical Manual. Author not stated. 7-10-51. Pp. 701-715.

(4) HW-19140 U.R. Technical Manual. Author not stated. 11-10-51. Pp. 700-712.

(5) HW-26582 Purex Facility--Process Equipment Design Criteria, Part II, Calculations. C. C. Randall and W. S. Graves. 12-31-52.

(6) HW-27492 Investigation of Explosive Characteristics of Purex Solvent Decomposition Products (Red Oil). R. M. Wagner. 3-17-53.

(7) HW-27796 Operational Characteristics of the Purex and Redox Plutonium Continuous Concentrator Package. R. J. Sloat. 4-21-53.

(8) HW-28168 The Precipitation of Plutonium (IV) Oxalate in Task 1: Nitric Acid Tolerances; Reactor Dimensions. K. M. Harmon. 5-26-53.

(9) HW-28690 Overconcentration in Initial Operation of Uranium Evaporator - 321 Building. G. Sege. 7-10-53.

(10) HW-28927 Progress Report, Chemical Development, July, 1953. F. W. Woodfield. 7-31-53. P. 5.

(11) HW-29534 Progress Report, Chemical Development, Sept., 1953, F. W. Woodfield. 9-31-53. P. 8.

(12) HW-30108 Progress Report, Chemical Development, Nov., 1953. F. W. Woodfield. 11-30-53. P. 3.

(13) HW-30742 Progress Report, Chemical Development, Jan., 1954. F. W. Woodfield. 1-31-54. P. 8.

(14) HW-31186 Precipitation of Plutonium (IV) Oxalate. J. F. Facer, Jr. and K. M. Harmon. 3-30-54.

(15) HW-32100 Notes Pertaining to Recuplex Product Evaporation. R. A. Pugh. 4-28-54.

(16) HW-32964 Progress Report, Chemical Development, Aug., 1954. F. W. Woodfield. 8-31-54. P. 22.

(17) M. K. Harmon, Memorandum: Information Review of Calcination Foaming Studies. H.A.P.O. 9-19-52.

FIGURE VII-1

TBP STEAM STRIPPING OPERATING DIAGRAM

HW #3 FLOWSHEET CONDITIONS

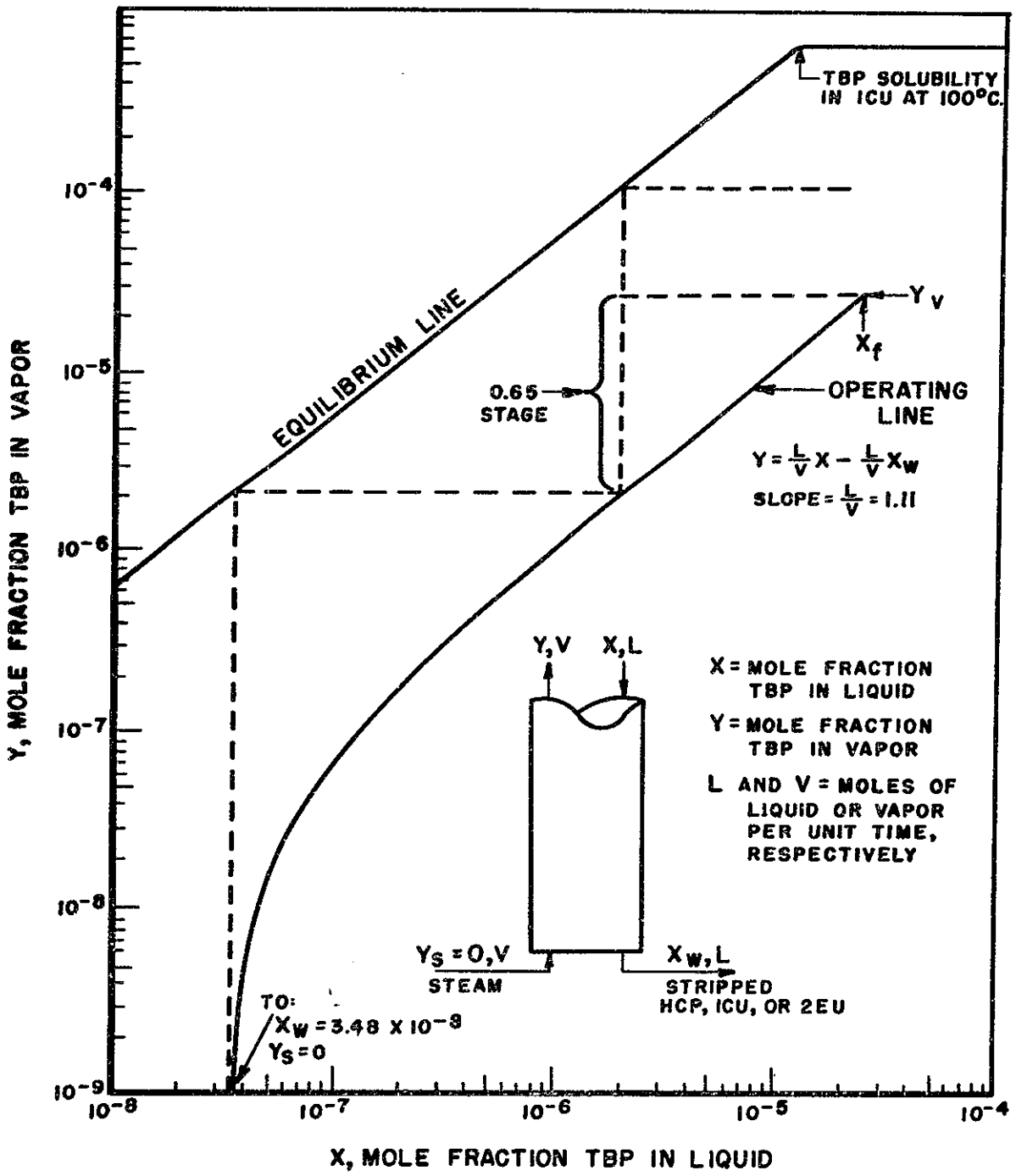

FIGURE VII-2

BOILING POINTS AND REGION OF POLYMER FORMATION PLUTONIUM-HNO_3 SOLUTIONS

SOURCE OF DATA: HW-32100

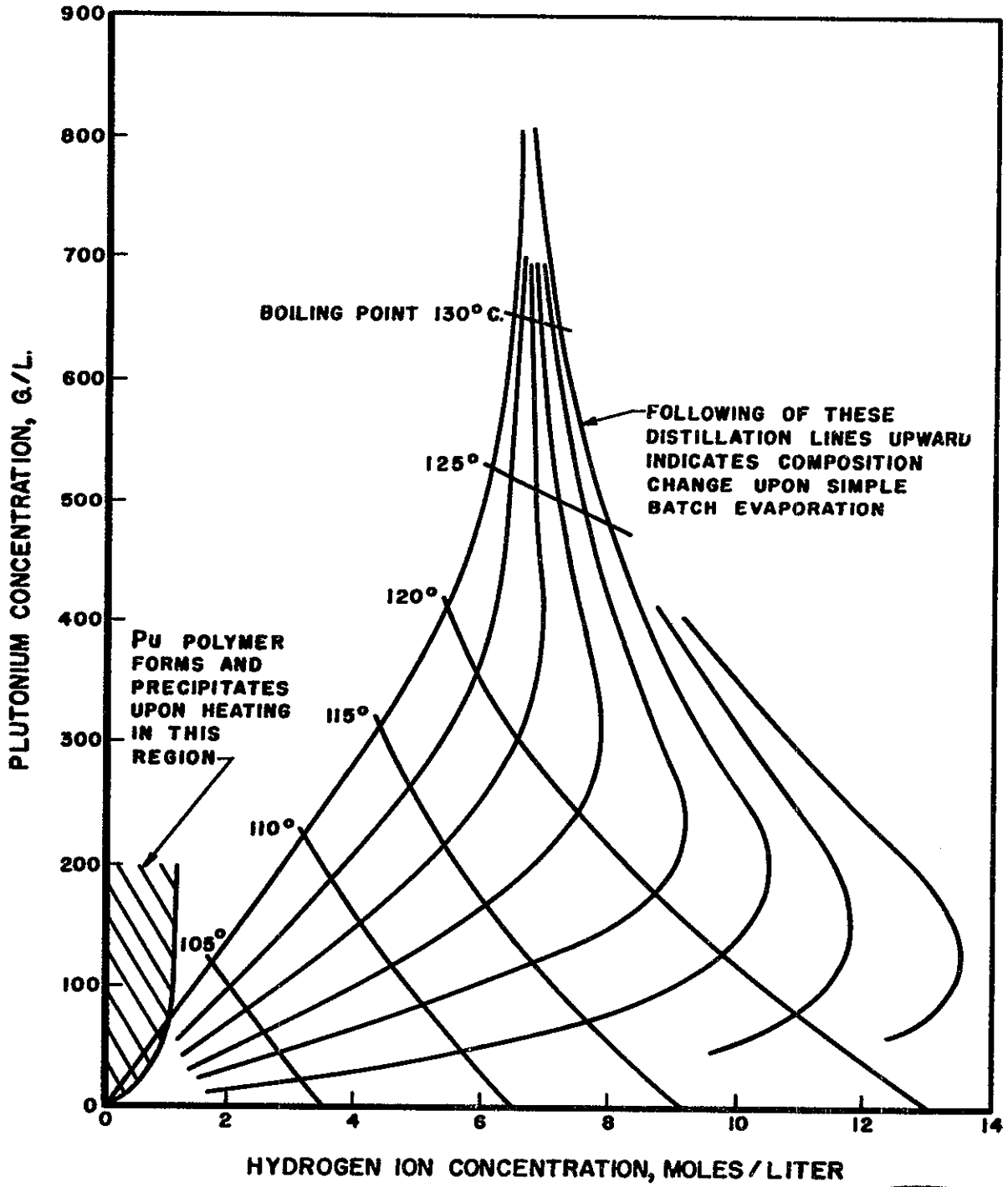

FIGURE VII-3

NITRIC ACID-PLUTONIUM-RATIO LIMITS IN FINAL PLUTONIUM CONCENTRATE

SOURCE OF DATA: HW-28168

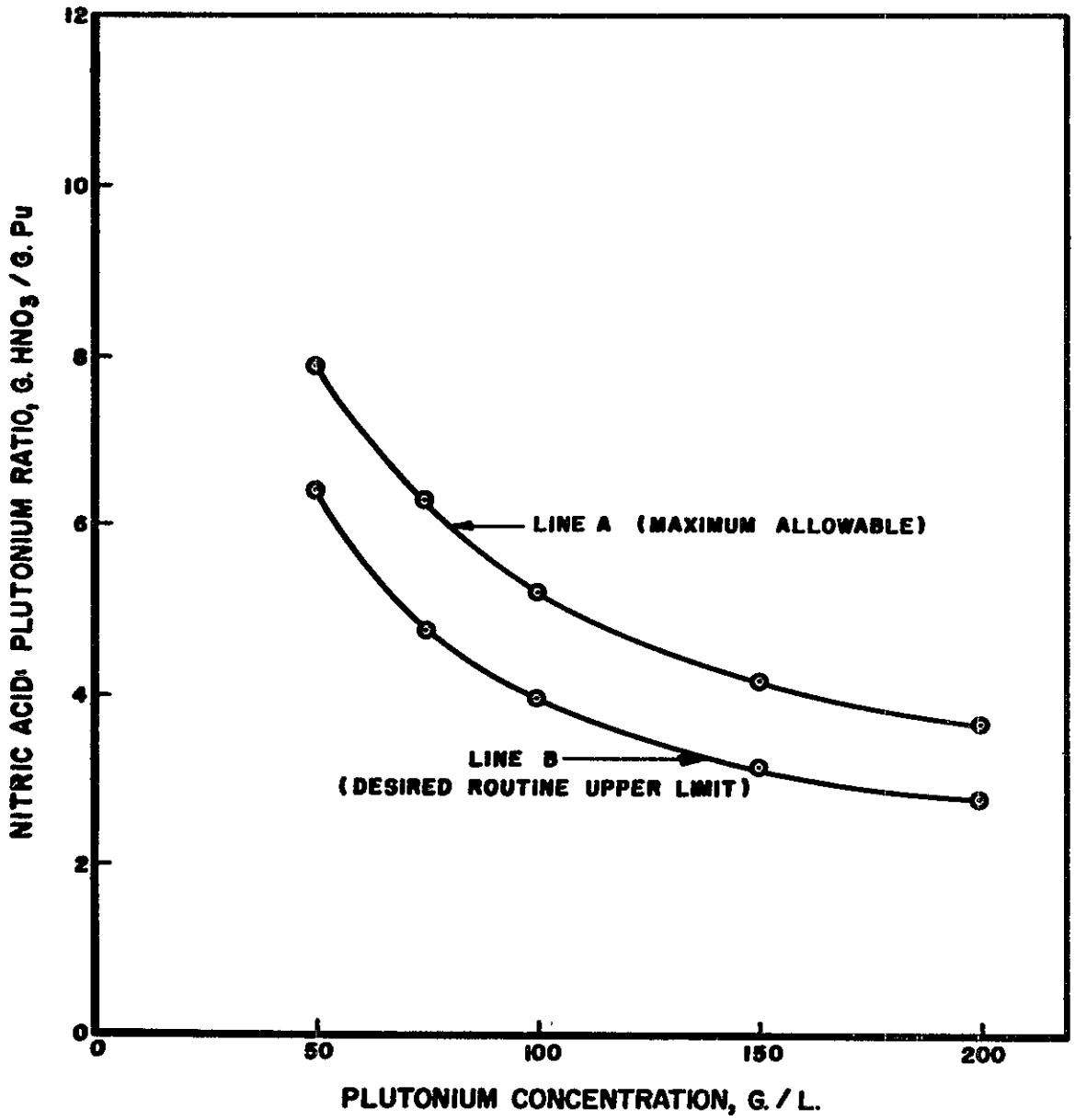

FIGURE VII-4

PLUTONIUM CONCENTRATOR OPERATING DIAGRAM

SOURCE OF DATA: HW-27796

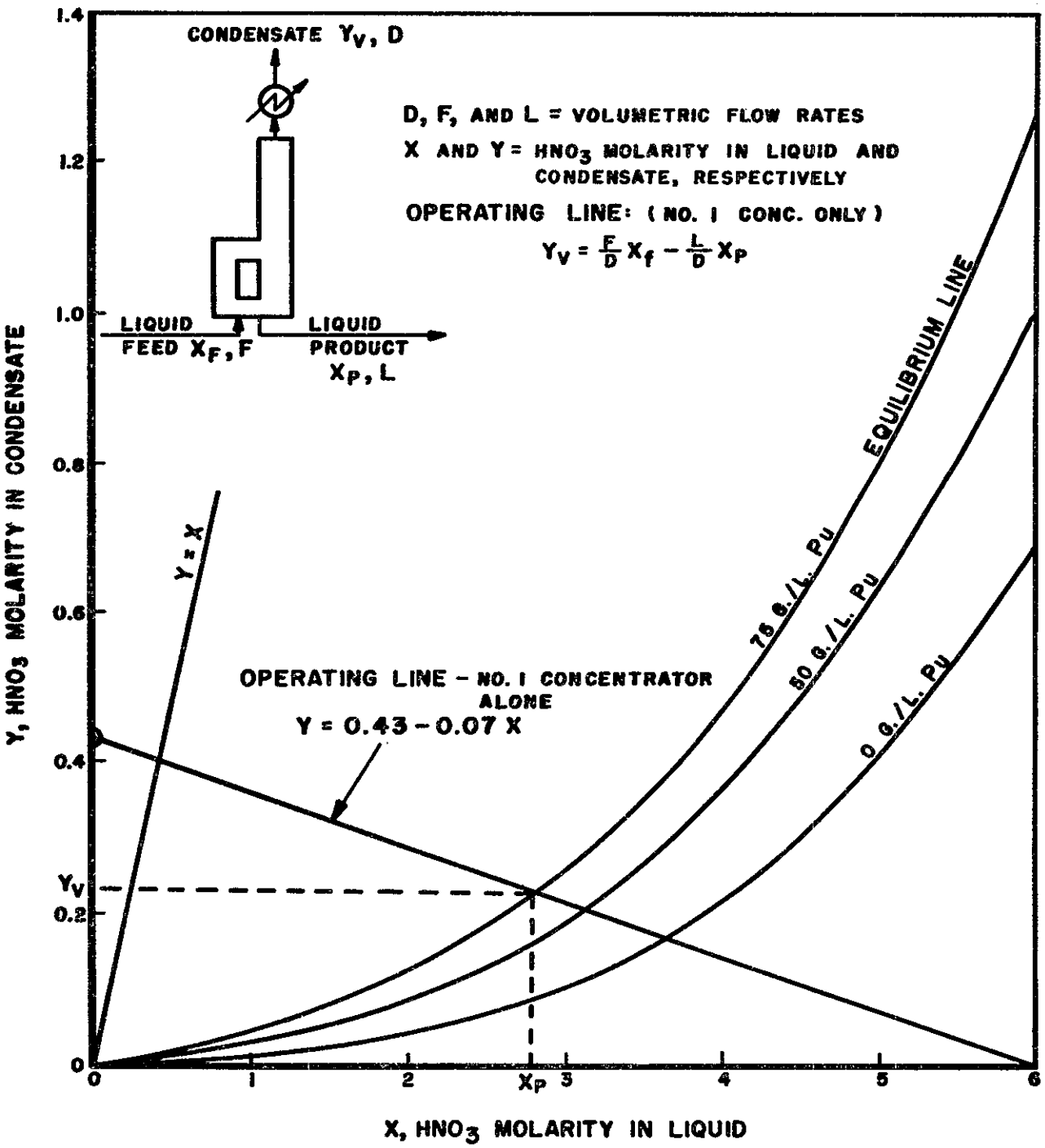

PART II: PROCESS, continued

CHAPTER VIII. AQUEOUS MAKE-UP

CONTENTS Page

A. VOLUMES AND COMPOSITION OF AQUEOUS STREAMS 802

B. SOURCES AND CONSUMPTION OF MATERIALS 802

C. MAKE-UP AND DISTRIBUTION FACILITIES 803

D. DEMINERALIZATION OF WATER 804

1. Source and Specifications for Process Water 804
2. Demineralization Process 805
3. Regeneration of the Ion Exchangers 806
4. Operating Cycle 806

E. ROUTING OF NITRIC ACID 807

F. FERROUS SULFAMATE MAKE-UP 808

G. MAKE-UP AND DISTRIBUTION OF PROCESS STREAMS 809

1. Water 810
2. Nitric Acid 810
3. Sodium Nitrite 811
4. Sodium Hydroxide 811
5. Sodium Nitrate 811
6. Ferrous Sulfamate 811
7. HAS, 2DS 812
8. HAIS, 2DIS 812
9. HCX, ICX, 2EX 812
10. IAS 812
11. IBX 812
12. 2AS 812
13. 2BX 813
14. 2OS 813

REFERENCES 813

CHAPTER VIII. AQUEOUS MAKE-UP

The processing of 10 tons of uranium per day through the Purex Plant requires the make-up and consumption of approximately 214,000 gallons of aqueous chemical solutions (including solute-free water streams) each day. Nitric acid, in several concentrations, is the major solute. Sodium hydroxide, sodium nitrate, sodium nitrite, sodium carbonate, and ferrous sulfamate are important solutes in several specific streams. The processes and methods for the make-up and distribution of these solutions are described in the present chapter.

A. VOLUMES AND COMPOSITIONS OF AQUEOUS STREAMS

Based on the processing of 10 tons of uranium per day under HW #3 Flowsheet conditions, operation of the Purex Plant requires the input of 32 aqueous process streams of 13 different compositions, representing a total volume of nearly 214,000 gallons* per day. Nitric acid, most of which is recovered from the process and contains small amounts of associated residual radioactivity, is the major solute. Other solutes include sodium hydroxide, sodium nitrate, sodium nitrite, sodium carbonate, and ferrous sulfamate.

Compositions, daily volume requirements, and daily solute requirements for the aqueous process streams are shown by Table VIII-1. The corresponding process steps utilizing these streams are also listed, in the order of the processing flow defined by the HW #3 Flowsheet (see Chapter I). Not included are streams which may be required on a non-routine basis (such as solutions for equipment decontamination) and streams which have a service-type function (such as solutions for Demineralizer ion-exchanger-bed regeneration).

B. SOURCES AND CONSUMPTION OF MATERIALS

Process water for the Purex Plant is prepared by treating filtered water in the Demineralizer (see Section D, below). The bulk of the necessary solutes are purchased and stored at the Purex Plant as liquids or dry chemicals. An appreciable quantity of the nitric acid consumed, however, is recovered from either the Uranium Recovery Plant or the Purex Plant itself (see Chapter X). The table below lists the approximate daily consumption of the materials required for aqueous make-up and subsequent processing in the Purex Plant.

---

*) Volumes stated in this chapter, when not otherwise designated, represent requirements for the processing of 10 short tons of uranium.

Material	Per Day Consumption[a] Liquid, Gal.[b]	Solid, Lb.
Demineralized water	192,000	
Nitric acid (virgin, 60%)[c]	1,046	
Nitric acid (recovered, 60%)[c]	9,160	
Sodium hydroxide (50%)	800	
Sodium nitrate		2,980
Sodium carbonate		600
Sodium nitrite		445
Sulfamic acid		270
Iron powder		75

Notes: (a) Based on requirements for the processing of 10 short tons of uranium, using streams tabulated in Table VIII-1.

(b) Volumes for HNO_3 and NaOH are based on the nominal concentrations shown.

(c) Relative amounts of virgin and recovered HNO_3 are based on the use of recovered HNO_3 in the streams indicated by Table VIII-1.

C. MAKE-UP AND DISTRIBUTION FACILITIES

Figures VIII-1 through VIII-3 are Process Flow Diagrams showing the aqueous make-up process. The required make-up and distribution facilities are centered primarily in the Chemical Tank Farm 211-A (Figure VIII-1) and in the Aqueous Make-Up Facility in the 202-A Building (Figures VIII-2 and VIII-3).

As shown by Figure VIII-1, the Chemical Tank Farm includes facilities for the receiving, storage, and further distribution of liquid solutes and solvents (including hydrocarbon diluent and TBP; see Chapter IX). The Demineralizer, for preparing process water, is also included in this area. Facilities for handling HNO_3 recovered from the 224-U Building (Uranium Recovery Plant), although conveniently shown by Figure VIII-1, are actually located in the Uranium Storage Tank Farm 203-A. From their respective storage tanks, HNO_3, NaOH, and H_2O may be pumped to the 202-A Building for use in the make-up and further distribution of aqueous streams.

From the Chemical Tank Farm, H_2O, NaOH, and HNO_3 (virgin only) are routed to the Aqueous Make-Up Facility in the 202-A Building where certain aqueous streams are prepared and distributed to Canyon processing equipment (see Figures VIII-2 and VIII-3). For the make-up of solutions from solid chemicals (including ferrous sulfamate make-up), tanks and auxiliary equipment are provided at the first-floor level. These solutions may then be pumped to the third-floor level where tanks and equipment are available for blending aqueous solutions and/or for transferring solutions (such as by gravity flow from head tanks) to Canyon equipment pieces. Although designed primarily to provide streams normally required by the Purex process, the

general arrangement of the Aqueous Make-Up Facility is sufficiently flexible to allow also the make-up and limited distribution of special solutions required on a non-routine basis. For the make-up of various wash (including equipment decontaminating) solutions and their extensive distribution throughout the Canyon area, a special tank (TK-105), with the necessary associated piping, has been included.

Aqueous make-up facilities shown by the Process Flow Diagrams associated with other chapters of this manual (for example, see Chapter VI) include headers, line blending equipment, and other components which are located on the gallery side of the Canyon shielding wall. The use of these facilities with aqueous streams originating elsewhere in the Purex Plant completes the make-up of process streams and their distribution to Canyon equipment pieces.

Individual systems for the make-up and distribution of specific aqueous streams are discussed under Sections D through G, below.

D. DEMINERALIZATION OF WATER

1. Source and Specifications for Process Water

Water for process use in the Purex Plant is obtained from the 200-E Area filtered-water supply. As received, this water contains relatively large quantities of dissolved ionic impurities. To be suitable for process use, the water must meet specifications which are designed to limit the introduction of impurities into process streams. The table below compares the characteristics of filtered water with the process-water purity requirements.

Constituent	Concentrations of Impurities, P.P.M.[a] Filtered Water[b]	Process Water Specifications: As Constituent Shown[b]	Process Water Specifications: As Equivalent $CaCO_3$[c]
Total hardness as $CaCO_3$	55 to 80	0 to 2	
Ca	20 to 40	$\leq$ 0.4	0 to 1
Mg	4 to 5.5	$\leq$ 0.25	0 to 1
Cl (as NaCl)	1 to 5	$\leq$ 0.6	0 to 1
Sulfates (as Na_2SO_4)	14 to 30	$\leq$ 1.5	0 to 1
Total dissolved solids (gravimetric)	85 to 110 (including silicates)	1 to 4.5 (excluding silicates)	
Silica (as SiO_2)	3 to 7.5	$\leq$ 7.5	
CO_2	0 to 2	$\leq$ 100	
Sodium	---	---	0 to 1
Total Cations	---	---	1 to 4
Bicarbonates	---	---	1 to 2
Total Anions	---	---	1 to 4

Notes:

(a) In addition to water characteristics shown by this table, the filtered water pH is 7.6 to 8.1, compared to the process water specification of 5 to 8.

(b) Expressed in p.p.m. of constituent.

(c) Data in this column are expressed according to the original Purex-Plant specification[1] and are the basis for calculated approximations expressed as p.p.m. of constituent shown.

The table above indicates the need for removal of impurities before filtered water may be considered suitable for process use in the Purex Plant. Water purification is accomplished in the Demineralizers, located in the Chemical Tank Farm.

2. Demineralization Process

Demineralization is an adsorption process in which undesirable dissolved salts are removed from water by means of ion exchange. Modern ion-exchange

adsorbents are selective with respect to either cations or anions; hence a complete demineralization process includes contacting the water with both cation-exchange and anion-exchange materials. In either case, removal of salts is effected by exchange of an ion in the adsorbent structure for another in the solution being treated. By use of this process, effluents comparable in quality to distilled water may be produced.

Various adsorbents, organic and inorganic, natural and synthetic, have been developed for both cation and anion exchange. In any case an acidic adsorbent removes cations; a basic adsorbent removes anions. In common industrial practice, the adsorbents are contained separately in fixed beds and demineralization is accomplished by a two-step process; i.e., water is passed in series through first the cation and then the anion material. For a two-step process, adsorption of a typical salt, such as $CaCl_2$, may be represented by the following equations, in which $\underline{C}$ and $\underline{A}$ represent the cation (acidic) and anion (basic) exchange materials, respectively:

$$CaCl_2 + H_2\underline{C} \rightleftharpoons Ca\underline{C} + 2\ HCl$$

$$2\ HCl + \underline{A}\ (OH)_2 \rightleftharpoons \underline{A}Cl_2 + 2\ H_2O$$

The Purex-Plant Demineralizers remove dissolved salts by means of the two-step process described above. The adsorbent for cation exchange is Belcolite R-1*; that for anion exchange is Belcolite A-1.*

3. Regeneration of the Ion Exchangers

Continued processing through an ion-exchange material ultimately results in depletion of the supply of adsorbent ions available for exchange. The adsorbent must then be regenerated; i.e., it must be treated with a solution which will replenish the exchange ions. Cation-exchange and anion-exchange materials of the type used for the Purex-Plant Demineralizers are regenerated by treatment with solutions of sulfuric acid (diluted to 2% to avoid a sulfonation reaction with the cation-exchange material) and sodium hydroxide, respectively. The effects of this treatment may be represented by equations of the type shown below, in which the regeneration reactions following cation and anion-exchange of $CaCl_2$ are given:

$$Ca\underline{C} + H_2SO_4 \rightleftharpoons H_2\underline{C} + CaSO_4$$

$$\underline{A}Cl_2 + 2\ NaOH \rightleftharpoons \underline{A}(OH)_2 + 2\ NaCl$$

in which $\underline{C}$ and $\underline{A}$ represent the cation and anion exchange materials, respectively.

4. Operating Cycle

As shown by Figure VIII-1, two Demineralizers, each of a capacity of 150,000 gal./day, are used to meet the demand for process water in

---

*) Supplied by Belco Industrial Equipment Div., Inc., Paterson, N. J.

[redacted]

the Purex Plant. Water from the filtered water supply is routed through cation and anion-exchange units, in that order, of either or both Demineralizers to the Demineralized Water Storage Tank, TK-30. From this tank, water is pumped to the 202-A Building.

In a normal operating cycle for a Demineralizer, the cation unit is operated until 150,000 gallons of water have been processed, at which time the need for regeneration is automatically indicated. Regeneration, using filtered water and sulfuric acid, is effected by treatment of the cation bed in accordance with the following sequence of operations:

(a) Backwash at 231 gal./min. for 10 minutes.

(b) Treatment for 30 minutes with 20% H_2SO_4, transferred with a 44 gal./min. water ejector to give 2% acid at the bed.

(c) Rinsing with water at 44 gal./min. for 15 minutes.

(d) Rinsing with water at 231 gal./min. for 20 minutes or until the free mineral acidity of the effluent rinse is less than 40 p.p.m.

In an anion unit, normal water treatment continues until the salt content of the effluent reaches a predetermined value, which is automatically indicated by conductivity measurements (and corresponds to the processing of approximately 450,000 gallons of water). The unit is then regenerated, using sodium hydroxide and cation-treated water, in accordance with the following sequence of operation:

(a) Backwash at 96 gal./min. for 10 minutes.

(b) Treatment for 10 minutes with 20% NaOH, transferred with a 24 gal./min. water ejector to give 4% caustic at the bed.

(c) Rinsing with water at 24 gal./min. for 10 minutes.

(d) Rinsing with water at 96 gal./min. until the conductivity of the effluent rinse reaches a satisfactory low level.

Following its regeneration, a Demineralizer unit may be returned to service.

E. ROUTING OF NITRIC ACID

In general, the choice of either virgin (fresh) or recovered nitric acid for the make-up of a particular process stream is based on the limitations, as well as the availability, of recovered nitric acid. (See Chapter X and HW-30246.[8]) For example, the use of recovered nitric acid is limited by its associated fission-product content (of the order of 10^{-4} to 10^{-5} gamma curies per gallon of 60% acid from the Purex Plant) to those streams in which such contamination can be tolerated. The use of nitric acid recovered from 224-U Building is further limited by its associated uranium content. Prior to the construction of the Purex Plant, the effects

of such limitations had not been fully determined for all streams. Thus, to provide flexibility of choice, and to guard against shortages, many streams are piped so that either virgin or recovered nitric acid may be used.

This section generally describes the routing of virgin and recovered nitric acid in the Purex Plant. Detailed routings are described by the Process Flow Diagrams in this chapter (see Figures VIII-1 through VIII-3) and - for specific process steps - in other chapters of this manual (for example, in Chapter VI for the solvent-extraction battery). Routings used for the make-up of principal acid-containing process streams are traced under Section G, below.

Virgin nitric acid is received from off-site vendors in tank trucks or railroad cars. At the Chemical Tank Farm, it is unloaded into the Nitric Acid Storage Tanks, TK-11 and TK-12 (see Figure VIII-1). From storage it may be pumped via either of two headers to the 202-A Building equipment pieces listed on Figure VIII-1. The No. 1 header directly serves equipment, including the Nitric Acid Head Tank, TK-222, in the Aqueous Make-Up Facility only. The No. 2 header is routed through the Aqueous Make-Up Facility, where it serves three tanks, and into the galleries from where certain gallery tanks and Canyon equipment pieces are served. From TK-222 in the Aqueous Make-Up Facility, virgin HNO_3 is routed to continuous acid users in the Canyon, such as the 2DIS stream, and to certain gallery tanks via a header (again designated No. 1 Fresh Nitric Acid Header).

Nitric acid recovered from the 224-U Building is received by tank truck at the Uranium Storage Tank Farm 203-A where it is transferred to storage tanks (TK-13 and TK-14). (See Figure VIII-1.) From the storage tanks, the acid may be pumped directly for metered additions to the Dissolvers (A3, B3, and C3) and to the HAF Make-Up Tank E6.

Nitric acid recovered from the Purex Plant (see Chapter X) is pumped from storage (TK-U1 and TK-U2) in the Acid Storage Vault through the Recovered Nitric Acid Header in the Sample Gallery. This header is piped via metering and proportioning devices to various equipment pieces in the Canyon.

F. FERROUS SULFAMATE MAKE-UP

Original Purex Process Flow Diagrams, based on the HW #3 Flowsheet, specify the make-up of ferrous sulfamate by reaction of sulfamic acid and metallic iron, and its subsequent addition to the IBX and 2DF streams as an aqueous solution of that compound alone. However, the addition of ferrous and sulfamate ions as an aqueous solution of sulfamic acid and ferrous ammonium sulfate may prove practicable. For the latter case the relatively simple aqueous make-up includes the dissolution of solid sulfamic acid followed by the addition and dissolution of solid ferrous ammonium sulfate (hexahydrate).

Ferrous sulfamate, as an aqueous solution of that compound alone, may be prepared by the reaction of sulfamic acid with ferrous hydroxide, ferrous carbonate, or metallic iron. In the Purex Plant, technical-grade sulfamic acid is used with hydrogen-reduced iron powder (Swedish Sponge Iron, or equal), the latter being selected primarily because of its availability. The two solid reactants are agitated vigorously in water, combining in accordance with the following equation to form ferrous sulfamate:

$$Fe + 2\ HNH_2SO_3 \longrightarrow Fe(NH_2SO_3)_2 + H_2 + \text{heat}$$

An excess (two to three per cent of the stoichiometric quantity) of sulfamic acid is required to insure a final solution of pH less than 2.2, a pH below which ferrous ion is more stable.

Using hydrogen-reduced iron powder, the reaction indicated above should take place without the addition of heat; in fact, the indicated heat of reaction should cause a temperature rise of approximately 20°F. Although the rate of reaction is favored by high temperature, control at a value less than 120°F. is recommended in order to limit the hydrolysis of the sulfamate ion to the sulfate ion. Under these conditions a long reaction time, perhaps a full day, is required.

Ferrous sulfamate is prepared in the Ferrous Sulfamate Make-Up Tank, TK-103, in batches of any convenient size consistent with tank capacity and in the proportions shown by the data of Figure VIII-3. Water, from the Demineralized Water Header, is measured into Tank 103, the agitator is turned on, and the solid sulfamic acid is added. The nitrogen purge is turned on, to avoid the explosion hazard attendant with hydrogen evolution (see the equation, above, and Chapter XXII), and the iron powder is added slowly to the acid slurry. Heating will accelerate the reaction, but the temperature should be controlled below 120°F. When the specific gravity of the solution at 80°F. reaches 1.42, the reaction is considered complete, and the charge is cooled and sampled. Ferrous ion concentration and pH are the criteria of a completed reaction. The desired concentration of ferrous ion is 130 grams per liter in a solution of pH less than 2.2. If the pH is above 2.2, additional sulfamic acid is dissolved until the desired pH is attained. Agitation is then stopped to allow settling of the unreacted iron. After a one-hour settling period the supernate is pumped via a pressure filter to the Ferrous Sulfamate Adjustment Tank, TK-101. A slurry heel, containing unreacted iron and sulfamic acid, is left in TK-103 for use in the next make-up. The solution in TK-101 is diluted with demineralized water to a concentration of 2 M ferrous sulfamate.

G. MAKE-UP AND DISTRIBUTION OF PROCESS STREAMS

The make-up and distribution of the 32 aqueous process streams described in Table VIII-1 (see Section A, above) is accomplished by the application of conventional unit operations, including (a) dissolution of solids and blending of liquids by agitation in tanks, (b) line-blending of liquids by injection of one stream into another, (c) transfer of liquids by pumping or by gravity, (d) heat transfer by the use of heating or cooling coils, heat exchangers, and jet injection of live steam, and (e) measurement of

liquid flow rates, such as by use of rotameters. For the Chemical Tank Farm and the Aqueous Make-Up Facility, unit operations and their sequence are shown by the Process Flow Diagrams, Figures VIII-1 through VIII-3, for this chapter. For operations further downstream, process-wise, reference must be made to other chapters.

In this section, the origin and flow of the process streams shown by Table VIII-1 are described in terms of the sequence of unit operations. Streams are grouped according to the "Stream Designation" defined by Table VIII-1. Separate streams of the same designation (such as water) are differentiated by reference to the "Process Step Utilization".

1. Water

From the Demineralized Water Storage Tank, TK-30, in the Chemical Tank Farm, water is pumped via the Demineralized Water Header to equipment pieces in the Aqueous Make-Up Facility, including the Demineralized Water Head Tank, TK-223. From TK-223, in which a constant level is continuously and automatically maintained, water flows by gravity to Canyon equipment pieces via a header which, for convenience, is again termed the Demineralized Water Header (see Figure VIII-3).

For slug rinses and Dissolver dilutions (see Table VIII-1), the Demineralized Water Header supplies the Dissolver Addition Tanks, TK-201, 202, and 203 (in the Aqueous Make-Up Facility), from which water flows by gravity to the corresponding Dissolver (see Chapter III). For Dissolver water addition (i.e., Dissolver Tower reflux), ammonia scrubbing, and acid concentration, water flows by gravity from TK-223 [illegible] rates measured by individual orifices to the Dissolver Towers (T-A3-1, T-B3-1, T-C3-1), the Ammonia Scrubbers (T-A3-3, T-B3-3, T-C3-3), and the Acid Recycle Tank F-7, respectively (see Chapters III and X). TK-223 also supplies the Centrifuge Spray Tank E2A (in the Operating Gallery) from which water for Centrifuge cleanout is pumped to the Centrifuges, G-E2 and G-E4 (see Chapter III).

2. Nitric Acid

The transfer of recovered and virgin (fresh) nitric acid to their respective headers and the transfer of virgin nitric acid to the Nitric Acid Head Tank were discussed in Section E, above. Additional routings and make-ups are described below.

For dissolution and HAF make-up either virgin or recovered 13 M (60%) HNO_3 may be used. Recovered acid flows from the Recovered Nitric Acid Header (for either Purex or 224-U Building recovered acid) via displacement meters to the Dissolvers or to the HAF Make-Up Tank (see Chapter III). Virgin nitric acid flows from the No. 2 Fresh Nitric Acid Header via displacement meters to these same tanks.

For IAF make-up, 2DF make-up and plutonium cross-over, either 13 M virgin or recovered nitric acid, from the corresponding acid header, may be routed for flow via controlling rotameters to the IAF Tank J1, 2DF Tank K1, and the 2AF Tank J5, respectively. (See Chapter VI.)

For Centrifuge cake wash, virgin 60% HNO_3 from TK-222 flows by gravity via a batch pot to the Centrifuge Spray Tank E2A where it is adjusted to 0.1 molarity by dilution with water from TK-223. The blended (by agitation) solution is pumped to the Centrifuges, G-E2 and G-E4, through spray nozzles. (See Chapter III.)

3. Sodium Nitrite

Sodium nitrite solution (1.6 M) is prepared in the Sodium Nitrite Make-Up Tank, TK-106, by the addition of water from the Demineralized Water Header followed by the addition and dissolution, with agitation, of solid sodium nitrite (see Figure VIII-2). The rate of dissolution is increased by the addition of heat from the tank steam coil. From TK-106, the resulting solution may be pumped to the Utility Addition Tank, TK-219, to the Sodium Nitrite Addition Tank, TK-220, or to the HAF Make-Up Addition Tank, TK-218.

For HAF make-up, $NaNO_2$ solution flows by gravity from TK-218 to the HAF Make-Up Tank E6 (see Chapter III). For IAF make-up and for ICU concentration, continuous addition of $NaNO_2$ solution from TK-220 to the IAF Tank J1 and the ICU Concentrator J8-1, respectively, (see Chapter VI) is made by means of metering pumps. For plutonium cross-over the continuous gravity flow of $NaNO_2$ solution from TK-220 to the 2AF Tank J-5 is measured and controlled by rotameter (see Chapter VI).

4. Sodium Hydroxide

Sodium hydroxide (50%) is received in railroad tank cars from off-site vendors. At the Chemical Tank Farm it is unloaded by pumping and stored in the Sodium Hydroxide Storage Tanks, TK-20 and TK-21 (Figure VIII-1). These tanks are equipped with steam heating coils for prevention of thickening or freezing of the NaOH solution. From storage, NaOH may be pumped via the Sodium Hydroxide Header to the following tanks in the Aqueous Make-Up Facility (see Figures VIII-2 and VIII-3): the Utility Addition Tank, TK-205; the Sodium Hydroxide Addition Tank, TK-206; the Dissolver Addition Tank, TK-201, 202, and 203; the Head End Wash Addition Tank, TK-221; the Waste Rework Addition Tank, TK-204; and the Wash Make-Up Tank, TK-105.

For jacket removal, 50% NaOH flows by gravity from any of the Dissolver Addition Tanks to the respective Dissolver (see Chapter III). For waste neutralization, 50% NaOH flows by gravity from TK-206 to the Neutralizer F16 (see Chapter X).

5. Sodium Nitrate

The general method for the preparation of sodium nitrate solution (3.6 M) is the same as that for sodium nitrite (see under G3, above) except that water and solid $NaNO_3$ are added to the Sodium Nitrate Make-Up Tank, TK-104 (Figure VIII-2). From TK-104, the resulting solution may be pumped to the Sodium Nitrate Addition Tank, TK-207. For jacket removal, addition of sodium nitrate to the Dissolvers is made by gravity flow from TK-207 (see Chapter III).

6. Ferrous Sulfamate

From the Ferrous Sulfamate Adjustment Tank, TK-101 (see Section F, above), 2 M ferrous sulfamate solution may be pumped to the 2DF Addition

Tank, TK-217 (see Figure VIII-3). For 2DF make-up the solution is added, continuously and at a flow rate controlled by metering pump, to the 2DF Tank K1 (see Chapter VI).

7. HAS, 2DS

Water, as HAS and 2DS, flows directly to the HA and 2D Columns from the Demineralized Water Header at controlled rates which are indicated by rotameter (see Chapter VI).

8. HAIS, 2DIS

The preparation of HAIS and 2DIS (4.6 M HNO_3) for the HA and 2D Columns, respectively, is accomplished by the continuous line-blending of 60% nitric acid and water, at a flow ratio controlled by rotameter (see Chapter VI). Water is routed from the Demineralized Water Header. For HAIS, nitric acid is routed from either the Recovered Acid Header or the No. 1 Fresh Nitric Acid Header; for 2DIS from the No. 1 Fresh Nitric Acid Header, only.

9. HCX, ICX, 2EX

The HCX, ICX, and 2EX streams (0.01 M HNO_3) are all prepared and routed continuously to their respective columns by line-blending 60% HNO_3 with water (see Process Flow Diagrams in Chapter VI). Acid from the No. 1 Fresh Nitric Acid Header is injected, at a rate controlled by metering pump, into a water stream, controlled by rotameter, from the Demineralized Water Header. The temperature of these streams may be controlled by the injection of live steam into the water stream at a point downstream from the rotameter.

10. IAS

The make-up of IAS (3.0 M HNO_3), by line-blending, parallels HAIS make-up (see under G7, above) except for the difference in the HNO_3:water ratio (see Chapter VI).

11. IBX

For the make-up of IBX (0.10 M HNO_3, 0.03 M $Fe(NH_2SO_3)_2$), 2 M ferrous sulfamate is pumped to the Ferrous Sulfamate Meter Tank, TK-216, and 60% nitric acid is routed to the Nitric Acid Meter Tank, TK-215 from the No. 1 Fresh Nitric Acid Header (see Figure VIII-3). From the meter tanks, nitric acid and ferrous sulfamate are added, by gravity flow, to either IBX Make-Up Tank, TK-209 or TK-210, where they are blended with water from the Demineralized Water Header. From TK-209 and TK-210, IBX flows by gravity, at a controlled rate indicated by rotameter, to the IBX Column (see Chapter VI).

12. 2AS

In the make-up of 2AS (0.5 M HNO_3), 60% nitric acid is routed to the Nitric Acid Meter Tank, TK-215 and dropped by gravity to either 2AS

Make-Up Tank, TK-211 or 212, where it is blended with water previously added from the Demineralized Water Header (see Figure VIII-2). From TK-211 and TK-212, 2AS flows by gravity, at a rate controlled by rotameter, to the 2A Column (see Chapter VI).

13. 2BX

For the make-up of 2BX (0.01 M HNO_3), 60% nitric acid is routed from the No. 1 Fresh Nitric Acid Header, via a batch pot, to either 2BX Make-Up Tank, TK-213 or TK-214, where it is blended with water added from the Demineralized Water Header (see Figure VIII-2). From TK-213 and 214, 2BX flows by gravity at a controlled rate measured by rotameter to the 2B Column (see Chapter VI). The temperature of the 2BX stream is controlled by means of a heat exchanger located upstream from the point of entrance to the 2B Column.

14. 2OS

For use as 2OS (0.25 M Na_2CO_3), sodium carbonate solution is prepared by the general method outlined for sodium nitrite solution (see under G3, above) except that water and solid sodium carbonate are added to the Sodium Carbonate Make-Up Tank, TK-107 (see Figure VIII-2). From TK-107, the solution may be pumped to the Sodium Carbonate Addition Tank, TK-208, from which it flows by gravity to the 2OW Tank R-2 (see Chapter IX).

REFERENCES

(1) Demineralizer System Data Sheet -- Data Sheet No. 211A-L-606-1. Vitro Corporation of America. 5-12-53.

(2) Purex Facility -- Inner Area Services Design Criteria -- Item XXVI-4. F. H. Ames, Jr. H.A.P.O. 11-7-52.

(3) BPF-7875 Belco Demineralizer Plant.

(4) H-2-54130 Process Flow Diagram, Aqueous Make-Up, Sheet 1.

(5) H-2-54131 Process Flow Diagram, Aqueous Make-Up, Sheet 2.

(6) H-2-54806 Process Flow Diagram, Chemical Tank Farm.

(7) HW-13697 Preparation of Ferrous Sulfamate. F. Clagett. 6-10-49.

(8) HW-30246 Recovered Acid Use in Redox and Purex. R. J. Sloat. 12-14-53.

TABLE VIII-1

AQUEOUS PROCESS STREAMS

Basis: 10 short tons of uranium per day -- HW #3 Flowsheet

Stream: Process Step Utilization	Stream: Stream Designation	Volume, Gal./Day	Solute Molarities: HNO_3	Solute Molarities: Other[a]	Sp.Gr.	Solute, Lb./Gal.	Solute, Lb./Day
Jacket Removal	$NaNO_3$	1,170	0	3.6 M $NaNO_3$	1.19	2.55	2,980
Jacket Removal	NaOH	253	0	18.8 M NaOH	1.53	6.27	1,587
Ammonia Scrubbing	H_2O	3,840	0		1.00	0	0
Slug Rinse	H_2O	934	0		1.00	0	0
Dissolution	HNO_3	2,392[b]	13		1.37	6.84[b]	16,350[b]
Dissolver Water Addition	H_2O	11,100	0		1.00	0	0
Dissolver Dilution	H_2O	3,860	0		1.00	0	0
Cake Wash	HNO_3	290	0.1		1.0	0.059	17
Centrifuge Cleanout	H_2O	24	0		1.00	0	0
HAF Make-Up	$NaNO_2$	94	0	1.6 M $NaNO_2$	1.07	0.92	86
HAF Make-Up	HNO_3	1,073[b]	13		1.37	6.84[b]	7,350[b]
Co-Decontamination Cycle	HAS	2,482	0		1.00	0	0
Co-Decontamination Cycle	HAIS	2,482[b]	4.6		1.19	2.42[b]	6,000[b]
Co-Decontamination Cycle	HCX	49,640	0.01		1.0	0.006	300
IAF Make-Up	$NaNO_2$	47	0	1.6 M $NaNO_2$	1.07	0.92	43
IAF Make-Up	HNO_3	1,066[b]	13		1.37	6.84[b]	7,290[b]
Partition Cycle	IAS	4,970[b]	3.0		1.1	1.57[b]	7,810[b]
Partition Cycle	IBX	2,236	0.10		1.01	0.05	112
				0.03 M $Fe(NH_2SO_3)_2$		0.062	139
Partition Cycle	ICX	49,640	0.01		1.0	0.006	300
ICU Concentration	$NaNO_2$	50	0	1.6 M $NaNO_2$	1.07	0.92	46
2DF Make-Up	$Fe(NH_2SO_3)_2$	45	0	2 M $Fe(NH_2SO_3)_2$	1.34	4.13	186
2DF Make-Up	HNO_3	984[b]	13		1.37	6.84[b]	6,730[b]
Final U Decontam. Cycle	2DS	2,482	0		1.00	0	0
Final U Decontam. Cycle	2DIS	2,482	4.6		1.19	2.42	6,000
Final U Decontam. Cycle	2EX	49,640	0.01		1.0	0.006	300
Pu Cross-Over	$NaNO_2$	291	0	1.6 M $NaNO_2$	1.07	0.92	270
Pu Cross-Over	HNO_3	1,640[b]	13		1.37	6.84[b]	11,210[b]
Final Pu Decontam. Cycle	2AS	536	0.5		1.01	0.26	139
Final Pu Decontam. Cycle	2BX	536	0.01		1.0	0.006	3.2
Acid Concentration	H_2O	2,980	0		1.00	0	0
Waste Neutralization	NaOH	547	0	18.8 M NaOH	1.53	6.27	3,430
Solvent Treatment	2OS	2,728	0	0.25 M Na_2CO_3	1.03	0.22	600

NOTES:

(a) Use of solutes other than HNO_3 is limited to those streams for which data is given.

(b) Data for this chapter are based on the use of recovered HNO_3 in these streams. Data for this table assumes a nominal 60% recovered HNO_3 concentration.

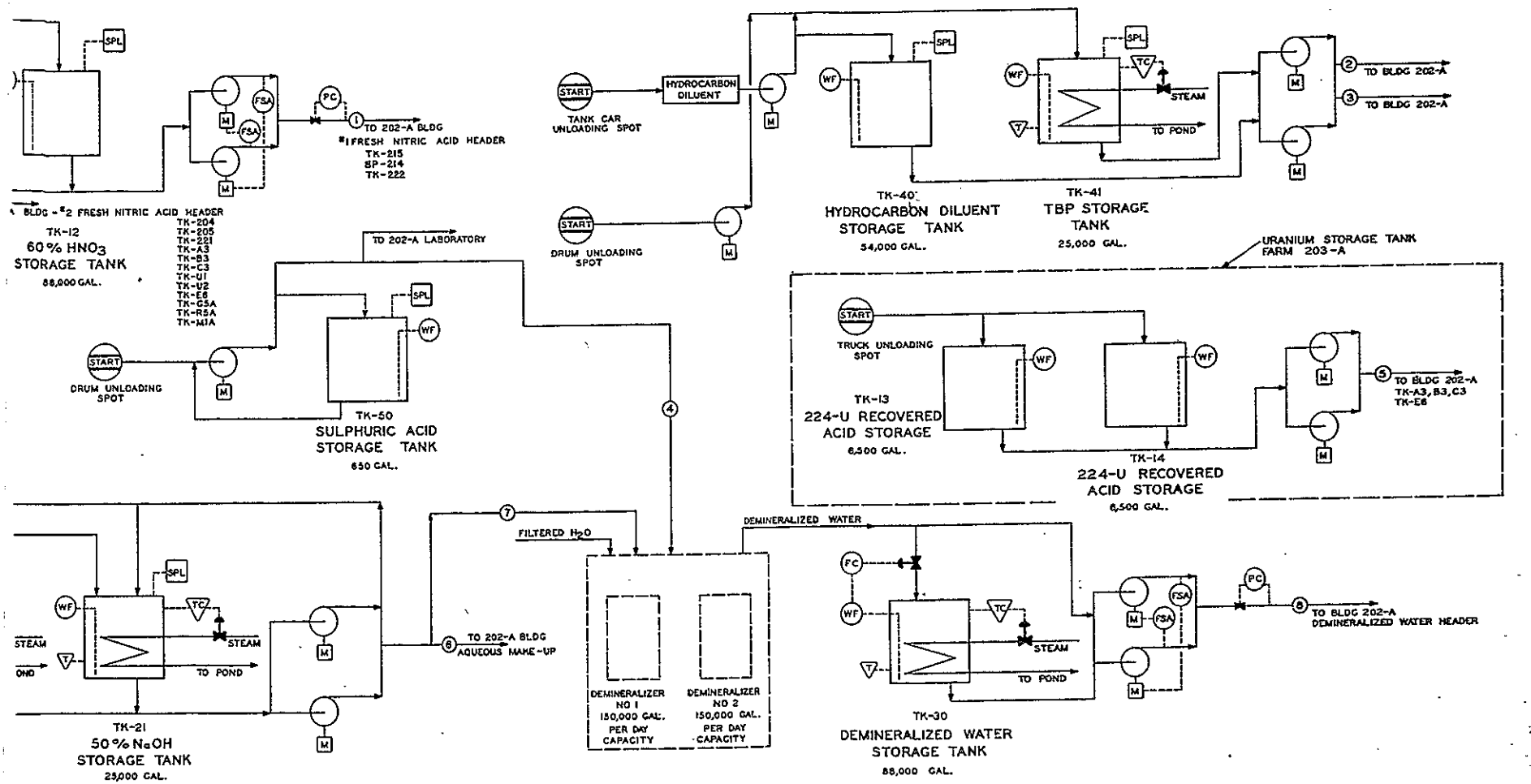

5		6		7		8	
Recovered Acid		50% NaOH		50% NaOH		Demineralized H2O	
1,870		800		23		192,000	
lb./Gal.	Wt.%	lb./Gal.	Wt.%	lb./Gal.	Wt.%	lb./Gal.	Wt.%
5.45	50						
		6.37	50	6.37	50		
5.45	50	6.37	50	6.37	50	8.33	100
1.31		1.53		1.53		1.00	
25		25		25		25	
1.85		90		90		1.0	

NOTES:

1) Symbol Abbreviations:

- FC — Flow Controller
- FSA — Flow Switch Alarm
- M — Motor
- PC — Pressure Control
- SPL — Sampler
- T — Temperature
- TC — Temperature Controller
- WF — Weight Factor

2) Basis: 20 short tons of uranium per day, instantaneous rate; HW #3 Flowsheet.
3) The flow of virgin (fresh) HNO_3 is based on its assumed use only for those streams indicated by Table VIII-1, all of which are supplied by the #1 Fresh HNO_3 Header. The #2 Fresh HNO_3 Header serves non-routine users; for this reason, it is not coded to the table of this figure.
4) The flow of 224-U recovered acid shown equals 90% of the theoretical amount recoverable from the Purex Plant uranium product.
5) Flow of TBP and diluent equals the handling loss, assumed to be 1% of the organic feed to the process.
6) The given volume of tanks is 80% of the total volume.

FIGURE VIII-1

PROCESS FLOW DIAGRAM

CHEMICAL TANK FARM

211-A

[redacted]

[redacted]

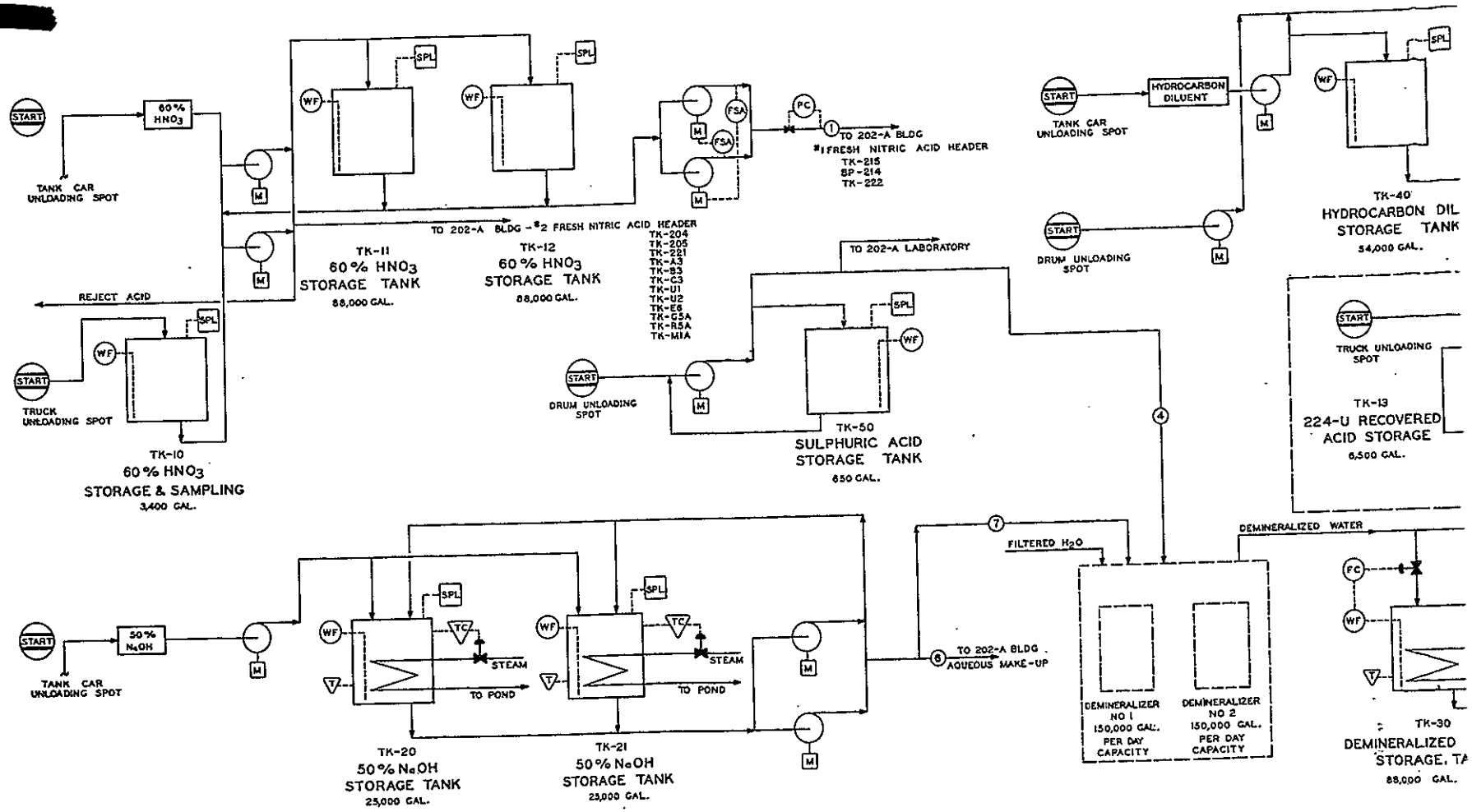

Code	1		2		3		4		5		6		7		8	
Stream	60% HNO_3		TBP		Diluent		93% H_2SO_4		Recovered Acid		50% NaOH		50% NaOH		Demineralized H_2O	
Flow, Gal./Day	1,047		262		612		19		1,870		800		13		192,000	
Components	Lb./Gal.	Wt.%	Lb./Gal.	Wt.%	Lb./Gal.	Wt.%	Lb./Gal.	Wt.%	Lb./Gal.	Wt.%	Lb./Gal.	Wt.%	Lb./Gal.	Wt.%	Lb./Gal.	Wt.%
HNO_3	6.85	60							5.45	50						
TBP			8.10	100												
Diluent					6.67	100										
H_2SO_4							14.2	93								
NaOH											6.37	50	6.37	50		
H_2O	4.56	40					1.1	7	5.45	50	6.37	50	6.37	50	8.33	100
Physical Properties																
Sp. Gravity	1.37		0.973		0.802		1.83		1.31		1.53		1.53		1.00	
Temperature, °C.	25		25		25		25		25		25		25		25	
Viscosity, cp25	2.03		3.32		1.68		22		1.85		90		90		1.0	

NOTES:

1) Symbol Abbreviations:

- FC — Flow Controller
- FSA — Flow Switch Alarm
- M — Motor
- PC — Pressure Control
- SPL — S
- T — T
- TC — T
- KT — K

2) Basis: 10 short tons of uranium per day, instantaneous rate; HN #3 Flo
3) The flow of virgin (fresh) HNO_3 is based on its assumed use only for th by Table VIII-1, all of which are supplied by the #1 Fresh HNO_3 Header. Header serves non-routine users; for this reason, it is not coded to th the Purex Plant uranium product.
4) The flow of 224-U recovered acid shown equals 90% of the theoretical ex
5) Flow of TBP and diluent equals the handling loss, assumed to be 15 of t process.
6) The given volume of tanks is 80% of the total volume.

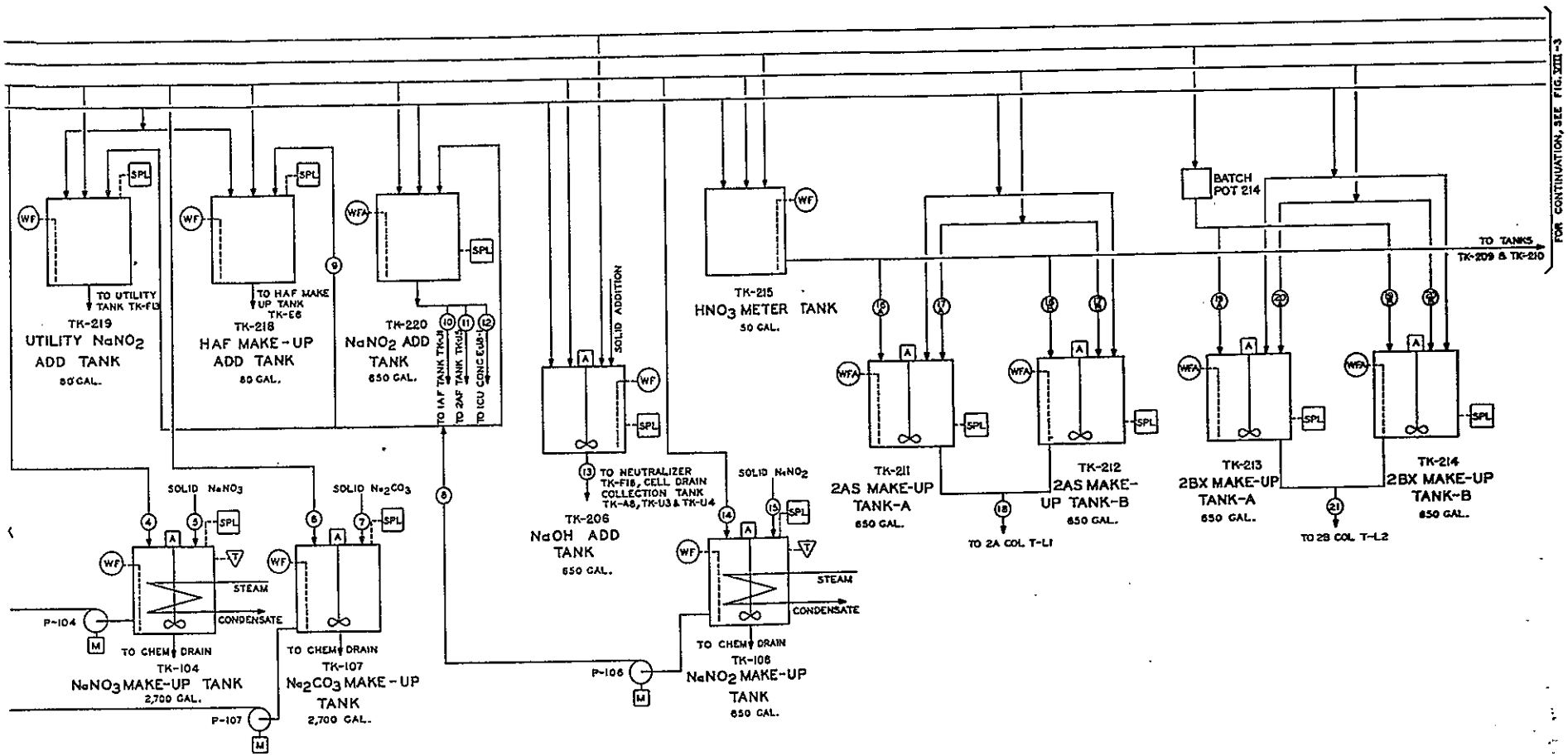

8	9	10	11	12	13	14	15	16A or B	17A or B	18	19A or B	20A or B	21
$NaNO_2$	$NaNO_2$	$NaNO_2$	$NaNO_2$	$NaNO_2$	50% NaOH	Demin. H_2O	$NaNO_2$	60% HNO_3	Demin. H_2O	2AS	60% HNO_3	Demin. H_2O	2BX
52	94	47	282	50	547	263		20.6	514	536	0.41	536	536

Wt. %	Lb./Gal.	Wt. %	Lb./Gal.	Wt. %	Lb./Gal.	Wt. %	Lb./Gal.	Wt. %	Lb./Gal.	Wt. %	Lb./Gal.	Wt. %	Dry Chemical Lb./Day	Lb./Gal.	Wt. %	Lb./Gal.	Wt. %	Lb./Gal.	Wt. %	Lb./Gal.	Wt. %	Lb./Gal.	Wt. %	Lb./Gal.	Wt. %
														6.84	60			0.26	3.1	6.84	60			0.005	0.06
					6.35	50																			
10	0.91	10	0.91	10	0.91	10	0.91	10					455												
90	8.00	90	8.00	90	8.00	90	8.00	90	6.35	50	8.33	100		4.55	40	8.33	100	8.15	96.9	4.55	40	8.33	100	8.33	99.9
7	1.07		1.07		1.07		1.07		1.53		1.00			1.37		1.00		1.01		1.37		1.00		1.0	
	25		25		25		25		25		25			25		25		25		25		25		50	
	1.0		1.0		1.0		1.0		82.5		1.0			2.2		1.0		1.0		2.2		1.0		1.0	

NOTES:

1) Symbol Abbreviations:

- WFA — Weight Factor Alarm
- WF — Weight Factor
- SPL — Sampler
- T — Temperature
- M — Motor
- A — Agitator

2) Basis: 10 short tons of uranium per day, instantaneous rate; HF #3 Flowsheet.
3) The given volume of tanks is 80% of the total volume.

FIGURE VIII-2

PROCESS FLOW DIAGRAM

AQUEOUS MAKE-UP FACILITY - PART I

[redacted]

[redacted]

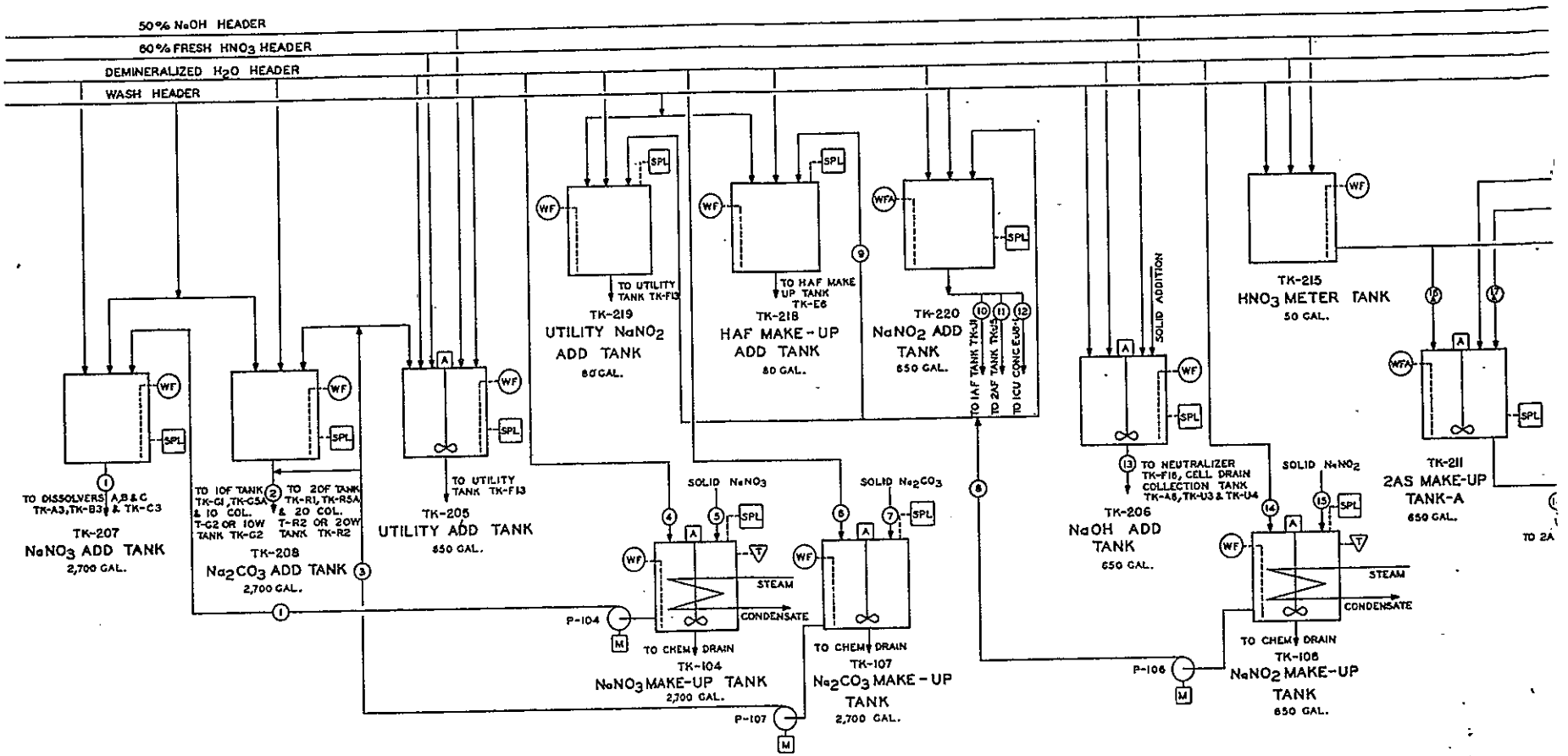

Code	1		2		3		4		5	6		7	8		9		10		11		12		13		14		15	16A or B		17A or B		18		19A or B		20A or B		21	
Stream	$NaNO_3$		Na_2CO_3		Na_2CO_3		Demin. H_2O		$NaNO_3$	Demin. H_2O		Na_2CO_3	$NaNO_2$		$NaNO_2$		$NaNO_2$		$NaNO_2$		$NaNO_2$		50% NaOH		Demin. H_2O		$NaNO_2$	60% HNO_3		Demin. H_2O		21%		60% HNO_3		Demin. H_2O		28%	
Flow, Gal./Day	1,170		2,728		2,728		1,032			2,728			482		94		47		291		50		547		463			20.6		534		536		0.41		536		536	
Components	Lb./Gal.	Wt. %	Lb./Gal.	Wt. %	Lb./Gal.	Wt. %	Lb./Gal.	Wt. %	Dry Chemical Lb./Day	Lb./Gal.	Wt. %	Dry Chemical Lb./Day	Lb./Gal.	Wt. %	Lb./Gal.	Wt. %	Lb./Gal.	Wt. %	Lb./Gal.	Wt. %	Lb./Gal.	Wt. %	Lb./Gal.	Wt. %	Lb./Gal.	Wt. %	Dry Chemical Lb./Day	Lb./Gal.	Wt. %	Lb./Gal.	Wt. %	Lb./Gal.	Wt. %	Lb./Gal.	Wt. %	Lb./Gal.	Wt. %	Lb./Gal.	Wt. %
HNO_3									1																			6.84	60			0.26	3.1	6.84	60			0.005	0.06
NaOH																							6.35	50															
Na_2CO_3			0.22	2.6	0.22	2.6						600																											
$NaNO_3$	2.55	26							2960																		455												
$NaNO_2$													0.91	10	0.91	10	0.91	10	0.91	10	0.91	10																	
H_2O	7.35	74	8.33	97.4	8.33	97.4	8.33	100		8.33	100		8.00	90	8.00	90	8.00	90	8.00	90	8.00	90	6.35	50	8.33	100		4.55	40	8.33	100	8.15	96.9	4.55	40	8.33	100	8.33	99.9
Physical Properties																																							
Sp. Gravity	1.19		1.03		1.03		1.00			1.00			1.07		1.07		1.07		1.07		1.07		1.53		1.00			1.37		1.00		1.01		1.37		1.00		1.0	
Temperature, °C.	25		25		25		25			25			25		25		25		25		25		25		25			25		25		25		25		25		50	
Viscosity, cp[25]	1.2		1.5		1.5		1.0			1.0			1.0		1.0		1.0		1.0		1.0		82.5		1.0			2.2		1.0		1.0		2.2		1.0		1.0	

NOTES:

1) Symbol Abbreviations:

- WFA — Weight Factor Alarm
- WF — Weight Factor
- SPL — Sampler

2) Basis: 10 short tons of uranium HF (3) Flowsheet.

3) The given volume of tanks is fo

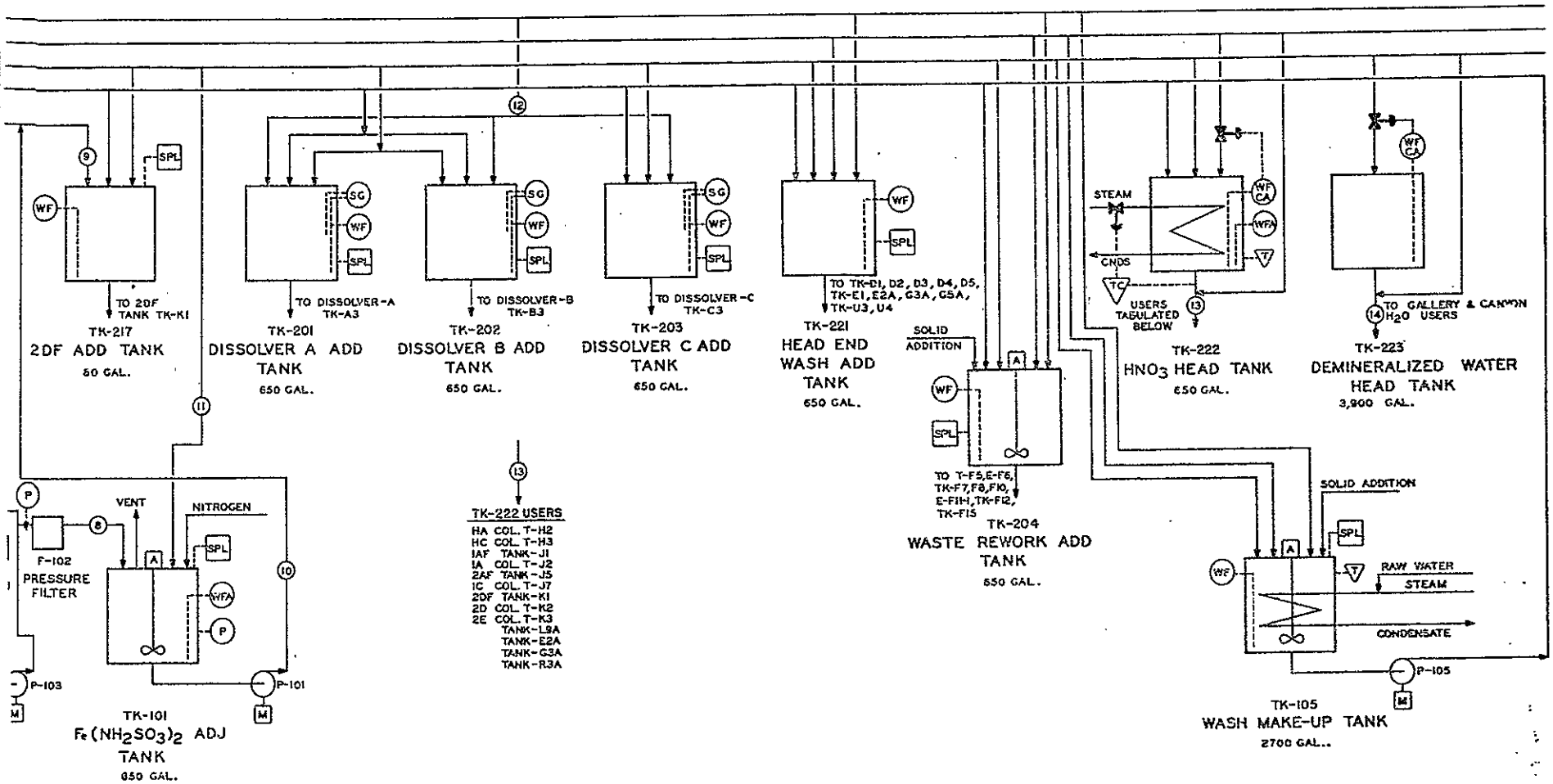

	7		8		9		10		11		12		13		14	
	Demin. H_2O		$Fe(NH_2SO_3)_2$		$Fe(NH_2SO_3)_2$		$Fe(NH_2SO_3)_2$		Demin. H_2O		50% NaOH		60% HNO_3		Demin. H_2O	
	55		67		45		79		10		254		1,010		179,400	
	lb./Gal.	Wt.%	lb./Gal.	Wt.%	lb./Gal.	Wt.%	lb./Gal.	Wt.%	lb./Gal.	Wt.%	lb./Gal.	Wt.%	lb./Gal.	Wt.%	lb./Gal.	Wt.%
											6.35	50	6.84	60		
			4.82	40.7	4.27	37	4.27	37								
	8.33	1.00	7.00	39.3	7.00	63	7.00	63	8.33	100	6.35	50	4.55	40	8.33	100
	1.00		1.42		1.34		1.34		1.00		1.53		1.37		1.00	
	25		25		25		25		25		25		25		25	
	1.0								1.0		82.5		2.2		1.0	

NOTES:

1) Symbol Abbreviations:

- WF — Weight Factor
- WFA — Weight-Factor Alarm
- WF CA — Weight-Factor Controller Alarm
- SPL — Sampler
- M — Motor
- A — Agitator
- SG — Specific Gravity
- T — Temperature
- TC — Temperature Controller
- P — Pressure
- PC — Pressure Controller
- FSA — Flow Switch Alarm

2) Basis: 10 short tons of uranium per day, instantaneous rate; HW #3 Flowsheet.
3) The flow of virgin (fresh) HNO_3 from TK-222 (Code 13) is based on its assumed use only for the streams indicated by Table VIII-1.
4) The given volume of tanks is 80% of the total volume.

FIGURE VIII-3

PROCESS FLOW DIAGRAM

AQUEOUS MAKE-UP FACILITY - PART II

[redacted]

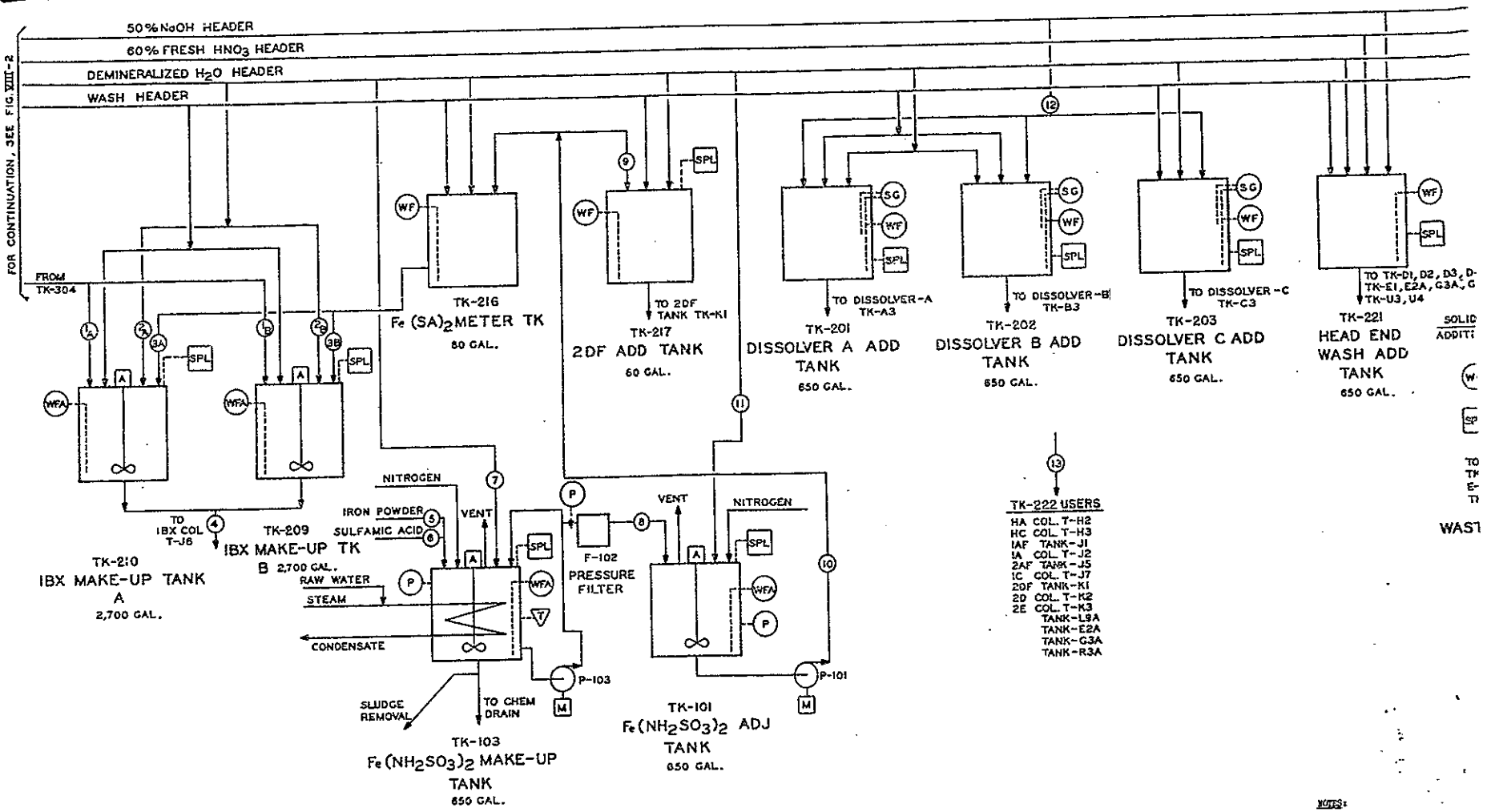

Code	1A or B		2A or B		3A or B		4		5	6	7		8		9		10		11		12		13		14	
Stream	60% HNO_3		Demin. H_2O		$Fe(NH_2SO_3)_2$		IBX		Fe Powder	NH_2SO_3H	Demin. H_2O		$Fe(NH_2SO_3)_2$		$Fe(NH_2SO_3)_2$		$Fe(NH_2SO_3)_2$		Demin. H_2O		50% NaOH		60% HNO_3		Demin. H_2O	
Flow, Gal./Day	17		2,185		34		2,236				55		67		45		79		10		254		1,010		179,400	
Components	Lb./Gal.	Wt.%	Lb./Gal.	Wt.%	Lb./Gal.	Wt.%	Lb./Gal.	Wt.%	Dry Chemical Lb./Day	Dry Chemical Lb./Day	Lb./Gal.	Wt.%	Lb./Gal.	Wt.%	Lb./Gal.	Wt.%	Lb./Gal.	Wt.%	Lb./Gal.	Wt.%	Lb./Gal.	Wt.%	Lb./Gal.	Wt.%	Lb./Gal.	Wt.%
HNO_3	6.84	60					0.052	0.62															6.84	60		
NaOH																					6.35	50				
Fe Powder									73																	
NH_2SO_3H										288																
$Fe(NH_2SO_3)_2$					4.37	37	0.062	0.074					4.82	40.7	4.17	37	4.17	37								
H_2O	4.55	40	8.33	100	7.00	63	8.29	98.7			8.33	1.00	7.00	39.3	7.00	63	7.00	63	8.33	100	6.35	50	4.55	40	8.33	100
Physical Properties																										
Sp. Gravity	1.37		1.00		1.34		1.01				1.00		1.42		1.34		1.34		1.00		1.53		1.37		1.00	
Temperature, °C.	25		25		25		25				25		25		25		25		25		25		25		25	
Viscosity, cp^{25}	2.2		1.0				1.0				1.0								1.0		82.5		2.2		1.0	

NOTES:

1) Symbol Abbreviations:

- (WF) Weight Factor.
- (WFA) Weight-Factor Alarm
- (WF CA) Weight-Factor Controller Alarm
- (SPL) Sampler
- (M) Motor
- (A) Agitator

2) Basis: 10 short tons of organic Flowsheet.

3) The flow of virgin (fresh) HNO_3 its assumed use only for the st

4) The given volume of tanks is 80

PART II: PROCESS, continued

CHAPTER IX. SOLVENT TREATMENT

CONTENTS

	Page
A. SCOPE AND FUNCTION OF SOLVENT TREATMENT	902
1. Introduction	902
2. Solvent Impurities	902
2.1 TBP degradation products	902
2.2 Diluent reaction products	903
2.3 Fission-product activity	904
2.4 Uranium and plutonium	905
2.5 Entrained impurities	905
3. Methods of Solvent Treatment	906
3.1 Chemical washing	906
3.2 Clarification	906
3.3 Alternate regeneration procedures	907
B. SOLVENT WASHING	907
1. IO Column	907
2. 20 Column	908
3. Process Chemistry of Solvent Treatment	908
4. Effects of Column Operating Conditions	910
C. CENTRIFUGATION OF WASHED SOLVENT	911
D. PROCEDURES	913
1. Normal Procedure	913
2. Detection and Remedy of Off-Standard Conditions	916
2.1 Detection of off-standard conditions	916
2.2 Off-standard solvent wash column operation	917
2.3 Off-standard centrifuge operation	918
2.4 Batch treatment of solvent	918
2.5 Disposal of non-recoverable solvent	919
REFERENCES	919

CHAPTER IX. SOLVENT TREATMENT

The Purex solvent is recycled repetitively through the solvent-extraction process. This chapter describes the impurities found in the recirculating solvent and the chemical washing and centrifugation steps used to remove them. Further details of the equipment and its operation will be found in Chapters V, XII, and XIII; the process characteristics of, and specifications for, the solvent are discussed in Chapter IV.

A. SCOPE AND FUNCTION OF SOLVENT TREATMENT

1. Introduction

The solvent used in the Purex process is a thirty volume per cent solution of tributyl phosphate (TBP) in a kerosene-type diluent (typically Shell kerosene fraction No. E-2342, similar to Shell Spray Base; or Phillips Soltrol 170). As purchased, the solvent constituents contain chemical impurities such as miscellaneous butyl phosphates and a variety of organic compounds normally found in petroleum fractions. After passage through the solvent-extraction process, the solvent also contains small quantities of fission products, uranium, plutonium, and other impurities such as nitration products and solid or colloidal materials. These impurities can, if permitted to accumulate, result in increased product losses and/or decreased decontamination of the products from each other and from fission products. Since the processing of one ton of irradiated uranium through the Purex process requires the use of solvent valued at nearly $13,000 (1954 prices), solvent regeneration and reuse is an economic necessity.

The Purex solvent is routinely pretreated and regenerated for reuse by an alkaline wash to remove soluble impurities and a centrifugation to remove entrained materials. While this treatment removes most of the solvent impurities, solvent which has been used for the initial decontamination of highly irradiated uranium is not sufficiently decontaminated by this procedure to permit its reuse in the final uranium cycle, where the permissible concentration of fission products is extremely small. A separate solvent system is provided for the final uranium cycle only, thus minimizing the contamination of uranium product through the solvent.

2. Solvent Impurities

2.1 TBP degradation products

The tributyl phosphate in the Purex solvent is hydrolyzed slowly under a variety of conditions to form dibutyl phosphate (DBP), monobutyl phosphate (MBP), phosphoric acid, and butanol. These hydrolysis products would, if permitted to accumulate, have adverse effects on the solvent-extraction process. Fortunately, their rate of formation is so slow that detrimental effects are not noted in a single passage of solvent through a normal decontamination cycle, and the solvent regeneration procedures suffice to

minimize any cumulative effects.

As discussed in Chapter IV, the rate of hydrolysis of TBP is apparently first order with respect to TBP concentration, and increases with increasing temperature and nitric acid concentration. Under the operating conditions of the Purex flowsheet, DBP is formed to the extent of 10 to 20 p.p.m. of solvent while passing through the solvent-extraction columns, and complexes almost immediately with uranium or other metallic ions present. Since the complexes are more soluble in solvent than in aqueous solutions, at least 90% of the DBP formed is carried by the solvent to the solvent recovery facilities,[2] where it is removed by the alkaline wash. MBP is formed in smaller quantities than DBP, since it is a product of the hydrolysis of DBP and has a higher rate of hydrolysis than DBP. MBP is largely removed from the system via the aqueous wastes, although some forms "cruddy" metallic precipitates, which are entrained in the solvent; these solid complexes are removed from the column interfaces by special jets and from the solvent by alkaline washing and centrifugation. Phosphoric acid and butanol are formed in still smaller quantities and are removed (principally in the aqueous wastes) as rapidly as formed.

The presence of DBP, MBP, and butanol may affect the Purex process in many ways.[3,4,22] DBP forms stable complexes with uranium and plutonium nearly stoichiometrically, and with fission products. These complexes strongly favor the solvent. DBP may, therefore, cause high uranium and plutonium losses in organic waste streams and a high radioactivity level in the solvent; although the fission-product complexes strongly favor the solvent, sufficient stripping occurs in the C-type columns to decrease the decontamination obtained in the solvent-extraction cycle. The principal process effects of MBP are those resulting from the formation of metal-organic complexes. These complexes can cause high product losses by preventing normal solvent extraction and also form surface-active agents which promote maloperation through excessive entrainment and/or emulsification. Butanol can adversely affect beta decontamination and/or cause plutonium losses by reducing Pu(IV) to Pu(III),[27] but the concentrations required to cause observable effects are rarely encountered in Purex processing.

2.2 Diluent reaction products

The diluent used for the Purex solvent is primarily composed of saturated aliphatic or naphthenic hydrocarbons which are essentially inert to the chemicals and conditions used in the Purex process. Small quanitities of other types of compounds, such as olefins, aromatics, and carboxylic acids, are also present and react to some extent with Purex chemicals. The composition and specifications for diluent, together with the reaction products of diluent in Purex processing, are discussed in Chapter IV; the process effects and control of the diluent reaction products are discussed here.

Purex diluent reacts slowly when heated with nitric acid of process concentrations, and the reaction rate is increased by the presence of nitrates. While this reaction is not detectable at temperatures less than 35°C., a variety of reaction products are formed at higher temperatures. Under the continued operating conditions of the similar Uranium Recovery process using

Shell E-2342 as diluent, reaction products were found in spent solvent to the extent of 2 to 3 grams per liter. These impurities included carboxylic acids (approximately 0.8 g./l.); nitro compounds (about 1.0 g./l.); and other, miscellaneous nitrogen-bearing compounds (about 0.2 g./l.), such as nitrites, nitroso compounds, nitrolic acids, etc. Laboratory data indicate that the same types of compounds are formed but to a smaller extent (about 1/3) when Bayol-D, Ultrasene, or Soltrol-170 is substituted for Shell E-2342. These compounds impart a yellow color to the diluent and are not generally soluble in aqueous solutions.

The process effects produced by the diluent impurities are primarily the retention of fission products or uranium in the solvent, and increased foaming during subsequent uranium calcination steps. Olefins react readily with radioiodine (8.1-day I-131) to form relatively stable compounds. The iodine, thus reacted, is not readily removed by chemical washing and hence contributes appreciably to the radioactivity of the recirculating solvent when processing reactor fuels aged less than 90 days. These process effects of the reaction products are very similar to those of DBP and ordinary laboratory tests do not distinguish between the two types of impurities. While the specific identity of the compounds causing these effects is not known, it is thought that the nitroso compounds or nitrolic acids are most probably the offenders. The carboxylic acids may be predicted to cause process abnormalities, but these compounds are held to a small equilibrium concentration by the alkaline washing step and probably cause no discernible process effects.

2.3 Fission-product activity

The organic waste streams are contaminated with fission products (principally iodine, ruthenium, zirconium, and niobium) as a result of both extraction and entrainment. While the fission-product retention by the solvent on continued reuse under Purex HW #3 Flowsheet conditions has not been specifically determined, experimental data have been obtained using similar flowsheets and diluents.[25] These data indicate that the solvent effluent from the initial decontamination cycle of a 600-MWD/T, 90-day-"cooled" feed will contain on the order of 2×10^3 microcuries of gamma activity (excluding iodine) per gallon of solvent. About 50% of this activity is contributed by zirconium-niobium and the balance by ruthenium. The solvent effluent from a final uranium cycle only (assuming a 600-MWD/T, 90-day-"cooled" feed) will contain on the order of 10 microcuries per gallon of gamma activity (excluding iodine), of which about half is contributed by each of the ruthenium and zirconium-niobium activities. The fraction of activity (excluding iodine) contributed by ruthenium to the solvent would be increased by either an increase in MWD/T level (through an increase in Ru-106 formation from plutonium fissioning) or a decrease of "cooling" time (through a decreased decay of Ru-103).

Iodine (8.1-day I-131) has a chemical affinity for the Purex solvent. In O.R.N.L. Purex pilot-plant studies[25] up to 85% of the iodine introduced in the solvent-extraction feed appeared in the first-cycle solvent effluent when Amsco 123-15 was used as the diluent. This chemical affinity appears to result from a composite of several mechanisms:[7] (a) TBP

dissolves and/or complexes iodide or iodine, but not iodate; (b) diluent (Amsco 125-90W was tested) dissolves iodine but not iodide or iodate; and (c) diluent (Amsco 125-90W) reacts slowly with iodine (probably by the iodination of olefinic bonds) and the reaction products are not easily removed by washing procedures. While the concentration of radioiodine may become quite high at equilibrium in the recirculating first-cycle solvent, it will interfere with the process only if its activity level in the process streams becomes so high that it interferes with the analyses for the process-limiting fission products, ruthenium and zirconium-niobium, or if its activity level causes excessive irradiation of the solvent. Neither eventuality is anticipated in the Purex Plant when processing feeds aged 90 days or longer; solvent deterioration through iodine irradiation is highly improbable under any anticipated Purex operating conditions.

2.4 Uranium and plutonium

Small amounts of uranium and plutonium are normally present in the organic waste streams and larger amounts may occasionally be present as a result of column maloperation. It is necessary to remove the uranium and plutonium from the solvent to minimize cross-contamination of the products.

The solvent feed for the first solvent system (IOF) should normally contain less than 0.4 per cent of the uranium processed (0.005 lb./gal. ICW and HCW combined)[18] and less than 0.4 per cent of the plutonium (principally from the HCW). The 2EW should normally contain less than 0.2 per cent of the uranium (0.005 lb./gal.) and a negligible amount of plutonium.

2.5 Entrained impurities

The organic effluents from the solvent-extraction columns normally carry by entrainment small quantities of emulsified aqueous phase and solid materials of indefinite composition. One sample of a solids-stablilized emulsion from a pilot-plant 20 pulse column (employing stainless-steel sieve plates in conjunction with a continuous organic phase) was observed to contain aqueous, organic, and solid phases in a volume ratio of 4:16:1.[4] The solids were observed to be in the form of a very fine, dark brown, amorphous powder, composed mainly of calcium, iron, chromium, silicon, manganese, and aluminum. Most of the fission products in the solids-stabilized emulsion were associated with the solid phase. The powder was essentially insoluble in strong mineral acids and alkali, and lost essentially no weight or radioactivity upon ignition. The solids probably originate with silica from the slug jacket bonding layer, particles resulting from equipment wear, and possibly with precipitates involving solvent degradation products. Some of these materials are emulsifying agents and increase the entrainment of aqueous phase.

The detrimental process effects of the entrained materials result primarily from the solids which adsorb fission products (principally zirconium-niobium) and are entrained by the process streams. This mechanism causes an abnormal movement of fission products and may limit the decontamination effected by solvent extraction. The elimination of solids from the solvent in a pilot-plant operation was observed to shift the split of zirconium-niobium

activity in the IB Column from 70% to 25% entering the IBU stream.[25] In the solvent washing step, sodium carbonate solution is entrained to some extent in the washed solvent. The introduction of this entrained carbonate in the solvent-extraction columns would cause the evolution of carbon dioxide gas by reaction with nitric acid. The extent of this gas evolution, however, is normally too small to cause process abnormalities through loss of pulse amplitude or through foaming.

3. Methods of Solvent Treatment

The solvent treatment in the Purex Plant is accomplished in two steps: (a) chemical washing of the solvent to remove dissolved impurities, and (b) clarification of the solvent to remove entrained impurities. As stated earlier, two parallel solvent systems are required (one for the Final Uranium Decontamination Cycle and one for the rest of the solvent-extraction process).

3.1 Chemical washing

The objectionable soluble impurities (such as dibutyl phosphate, plutonium, uranium, and fission products) are removed from the recirculating Purex solvent by washing with a dilute, warm (45°C.) solution of sodium carbonate. This washing is effected continuously in O-type pulse columns, which are operated with the organic phase continuous to obtain desirably long solvent residence times for the washing process. The sodium carbonate solutions are recirculated through the contactors at rates conducive to good contact between the two phases. A portion of the recirculating solution containing the objectionable impurities is withdrawn periodically and eliminated as an aqueous waste.

Although a batch process would permit greater flexibility with respect to washing agents and contact times, a continuous solvent washing process is preferred for a high-capacity production plant. The continuous process has the advantage of lower costs through smaller initial capital investment, smaller solvent inventory, and smaller labor cost. Intermittent batch washing of the Purex solvent may be effected in one of the solvent pump tanks, if necessary.

3.2 Clarification

The washed Purex solvents carry by entrainment small quantities of objectionable materials, such as sodium carbonate solution and amorphous solids, which carry adsorbed fission products and help to stabilize an aqueous-organic emulsion. These entrained materials are continuously removed by centrifugation at a force of 700 to 900 or 1050 to 1450 times gravity in specially designed liquid-liquid-solid centrifuges. The separated aqueous phase from each of the solvent centrifuges is returned continuously to the recirculating wash solution for the corresponding "O" column. The solids accumulate in the centrifuge bowls from which they are periodically slurried to aqueous waste. In each solvent system, the clarified solvent is cascaded to a pump tank from which it is continuously pumped to the solvent-extraction columns for reuse.

3.3 Alternate regeneration procedures

An alternate solvent recovery system for normal operation has been designed in the event it should become desirable to replace the pulse column with a tank-type contactor. Detailed Process Flow Diagrams of the alternate system are available (H-2-54141 and H-2-54143). In this system each column is replaced with a tank similar to the IOF (or 20F) Tank. The new contactor and the present feed tank would then be used as contactors in series, permitting the solvent to be washed successively with different reagents. As in the pulse-column system, entrained aqueous phase and solids would be removed by centrifugation. All piping through concrete, tunnel piping, and tank footings for the alternate system are currently present in the plant; only the new tanks and jumpers are required to make the conversion.

The use of alternate regeneration procedures may sometimes seem desirable to meet specific needs. For example, the removal of olefins and other unsaturates from kerosene-type diluents may be effected by washing the diluent, before it is mixed with TBP, with 20% oleum (20% free SO_3 in H_2SO_4); this procedure could be utilized to minimize the retention of I-131 (and possibly other fission products) in the solvent. (When TBP-bearing diluent is contacted with oleum, the TBP is largely extracted out of the diluent into the oleum phase.)[1] The use of 1% NaOH in lieu of Na_2CO_3 for solvent washing increases the rate and the degree of fission-product removal from the solvent, but should be used only after uranium has been essentially removed, to prevent the precipitation of gelatinous sodium diuranate. The use of reducing agents, such as Na_2SO_3, may improve the removal of radioiodine, but has little effect on the removal of other solvent impurities.

Alternative regeneration procedures of several other types have been studied experimentally, but have not necessarily been provided for in the Purex Plant. The removal of diluent reaction products may be effected by vacuum and/or steam distillation of the solvent at temperatures around 100°C., since most of the reaction products are not volatile under these conditions. The reaction products are adsorbed by activated alumina or carbon. While the removal of reaction products on activated carbon is effective and efficient, activated alumina also adsorbs TBP and the subsequent separation of reaction products from TBP is inefficient. The removal of entrained materials by washing with water and/or nitric acid and by filtration through various filter media was tested and found inferior to the centrifugation method which is employed in the Purex Plant.[25]

B. SOLVENT WASHING

1. IO Column

The IO Column is a pulsed perforated-plate column through which first-cycle organic waste streams (HCW, ICW) are passed continuously while being countercurrently scrubbed with 2-1/2% (0.24 M) sodium carbonate (IOR). It is operated with the solvent phase continuous (the solvent-aqueous interface controlled at the bottom) and with solvent and aqueous-phase relative volume flow

rates of 810 and 270, respectively, based on HAF = 100. The IO Column (34 in. I.D.) contains 80 fluorothene plates which are spaced 4 inches apart and perforated with 3/16-in. holes on 3/8-in. centers to produce 23% free area. The salient design features of the column are described in Chapter XII. The capacity and extraction-effectiveness characteristics of the IO Column are discussed in Chapter V.

2. 20 Column

The 20 Column is the second solvent treatment system counterpart of the IO Column. The main differences are: (a) lower organic throughput -- approximately 45% of the organic throughput of the IO Column; (b) feed origin -- organic waste stream from the second uranium cycle (2EW) only; and (c) higher recovered solvent purity requirements with respect to fission-product content. The 20 Column is identical with the IO Column except that it is equipped with flanges for contact maintenance.

The solvent and aqueous-phase relative volume flows are 370 each, based on HAF = 100.

3. Process Chemistry of Solvent Treatment

The chemistry involved in the regeneration of the recirculating Purex solvent is discussed below. Solvent chemistry of importance elsewhere in the process is treated in Chapter IV.

3.1 Removal of TBP decomposition products

TBP decomposition products must be removed from the recirculating Purex solvent to obviate many deleterious process effects as discussed above. Monobutyl phosphate, phosphoric acid, and butanol are aqueous selective and leave the process principally in the aqueous waste streams from the extraction columns. Dibutyl phosphate, however, is organic selective and thus is carried by the solvent to the solvent treatment system, where it must be removed.

The removal of DBP is accomplished by washing the solvent with a dilute aqueous solution of an alkaline material. A 2-1/2% solution of sodium carbonate is used in the solvent treatment columns to react with the acidic hydrogen associated with the DBP to form an aqueous-soluble, sodium-butyl phosphate. Alkaline sodium solutions are more effective in removing DBP than are solutions of neutral or acidic salts such as sodium sulfate.(5) Any MBP present in the solvent reacts similarly and is removed by washing with alkaline solutions. These reactions may be expressed as follows:

$$H(C_4H_9)_2PO_4 + Na_2CO_3 \longrightarrow Na(C_4H_9)_2PO_4 + NaHCO_3$$

$$H_2(C_4H_9)PO_4 + 2Na_2CO_3 \longrightarrow Na_2(C_4H_9)PO_4 + 2NaHCO_3$$

The following table illustrates the efficacy of DBP removal by sodium carbonate. A 30% TBP-Amsco solution to which DBP had been added was given a series of one-minute washes with equal volumes of 0.1 M Na_2CO_3 solution.

DBP REMOVAL BY 0.1 M Na_2CO_3 - ONE-MINUTE CONTACTS[26]

Carbonate Wash No.	DBP Removed, P.P.M.
1	800
2	5.7
3	1.0
4	Below limit of detection

The efficacy of 0.1 M sodium carbonate for removing MBP from solvent was determined by repeating the above experiment with solvent containing 30 p.p.m. MBP. The first one-minute wash removed essentially all of the MBP from the solvent. Under normal operating conditions, DBP and MBP will be reduced to less than the limits of detection in the treated solvent.

3.2 Removal of diluent reaction products.

The removal of the diluent reaction products is normally accomplished via the aqueous wastes by mechanisms not completely understood. Nitroso and, to some extent, carboxyl compounds are removed by the carbonate wash. Nitrite esters are probably hydrolysed in the acid streams to alcohols and nitrous acid, which products are removed by the carbonate washes. Alternative removal techniques are discussed under A3.3, above.

3.3 Fission-product removal

A dilute aqueous solution of sodium carbonate partially strips fission products from the first-cycle solvent, providing decontamination factors of five to ten for ruthenium, zirconium, and niobium. A small additional decontamination is achieved by centrifugation as a result of the removal of the fission products adsorbed on the entrained materials. An over-all decontamination factor of about 10 to 15 for each of these three fission products is obtained.

The efficacy of the solvent wash (under liquid-liquid contacting conditions assuring a high degree of mass-transfer effectiveness) is a function of the "age" of the contaminated solvent, the chemicals used, and of the time and temperature of the chemical contact. Solvent is more easily decontaminated immediately after contamination than it is after ageing: in one test, comparable washing removed 20 times less gamma activity after ageing for three weeks.[13] As illustrated in Table IX-1, a dilute alkaline solution at elevated temperature (50°C.) removes the fission products more efficiently than any other treatment tested. Although one per cent NaOH produces better decontamination from fission products than three per cent Na_2CO_3, the hydroxide has the undesirable property of precipitating uranium; precipitated uranium could cause emulsification in the solvent wash columns and would load the solvent centrifuge more rapidly than is desirable. While the use of higher temperatures for the solvent wash might be expected to

improve the rate and degree of decontamination obtainable, the evolution of carbon dioxide may interfere with the pulsing efficiency in the pulse column as the temperature is raised above the 55 to 60°C. range. A concentrated (say 1.5 to 2.0 M) solution of Na_2CO_3 is much less effective as a washing agent than a dilute one (0.2 to 0.5 M), presumably because of the action of Na_2CO_3 as a salting agent. The presence of oxidizing agents such as potassium permanganate or hydrogen peroxide improves the fission-product removal slightly; however, the use of these agents is unattractive because of precipitate formation (MnO_2), or the potential formation of unstable organic peroxides. The addition of 0.1 M sodium sulfite to the sodium carbonate improves arithmetic decontamination factors for iodine from 2 or 3 to approximately 4 to 9.(7) If desired, a comparable additional restriction of radioiodine pick-up may be obtained by pretreating the solvent with inert $KI-I_2$ solution prior to contact with radioactive solutions.(7) Nitric acid is much inferior to either NaOH or Na_2CO_3 as a chemical wash for fission-product removal.

3.4 Uranium and plutonium removal

Under normal operating conditions, the bulk of the uranium in the solvent is in the form of unstripped TBP-uranium complex with small amounts of DBP-complexed uranium and entrained aqueous droplets into which uranyl nitrate has been stripped after entrainment. Sodium carbonate in the 10 and 20 Columns releases essentially all the DBP-complexed uranium by removing the DBP as the aqueous-soluble sodium salt. The organic treatment columns have an aqueous phase of low salting strength, and, hence, uranium associated with TBP tends to favor the aqueous phase and is extracted from the organic as in a C-type column. Uranium is retained in aqueous solution as the soluble complex $UO_2CO_3 \cdot 2\ Na_2CO_3$.

The removal of plutonium from DBP and TBP complexes is comparable to the removal of uranium as discussed above.

3.5 Nitric acid removal

Nitric acid is normally present in concentrations of 0.001 M or less and is removed by reaction with sodium carbonate to form sodium nitrate and sodium bicarbonate. The evolution of CO_2 during the reaction does not occur in sufficient quantities to cause operational difficulties unless the sodium carbonate is depleted or the column temperature exceeds 55° to 60°C.

4. Effects of Column Operating Conditions

4.1 General

Development data indicate that the extent of removal of radioactive fission products from spent solvent is affected by temperature, contact time, and the number of times the scrub solution is recycled. The present subsection is concerned primarily with these effects. For a discussion of the extraction effectiveness and capacity characteristics of the O-type

(solvent-washing) pulse columns, as affected by such variables as flow ratio, pulse frequency, and throughput rate, reference is made to Chapter V.

4.2 Effect of temperature

As illustrated in Table IX-1, increasing the temperature of the carbonate washing step from 25°C. to 50°C. increases both the rate and the degree of fission-product removal (the latter by a factor of 3). For a discussion of the possibly beneficial effects at elevated-temperature operation of the O-type pulse columns reference is made to Chapter V. Apart from solvent flammability considerations, the operation of the pulse columns for sodium carbonate washing may be limited to temperatures of about 55°C. or lower by the evolution of carbon dioxide gas which may promote emulsification or reduce the transmission of the pulse throughout the column.

4.3 Effect of contact time

The washing of the Purex solvent is a time-dependent operation. While the butyl phosphates, nitric acid, uranium, and plutonium reach equilibrium with the alkaline washes quickly, the fission products (particularly ruthenium and iodine) approach equilibrium slowly. Development data[6] indicate that an optimum time of intimate contact for the reacting phases is about twenty minutes, little advantage being obtained from even longer contact times, while a ten-minute contact provides 50 to 90 per cent of the decontamination obtained by a twenty-minute contact, depending on the concentration and identity of the reagent used. The plant equipment is so sized that the nominal contact times in the IO and 20 Columns are 25 and 60 minutes, respectively, when the plant is processing uranium at a rate of 10 tons per day under HW #3 Flowsheet conditions. The contact times in these equipment pieces are approximately inversely proportional to the uranium production rate.

4.4 IOS Recycle

Development data indicate that one volume of 1% to 3% aqueous Na_2CO_3 solution will decontaminate up to about twenty-five volumes of normal solvent effluent from the decontamination cycles before the decontamination of the solvent becomes a function of the volume of solvent contacted; beyond this volume ratio, the solvent is decontaminated less efficiently.[16,24,25] The presence of abnormal amounts of uranium and/or nitric acid in the solvent may, of course, decrease the volume of solvent which can be washed efficiently by a given volume of carbonate solution. Under HW #3 Flowsheet conditions, the IOS is recycled about 7.4 times at an organic/aqueous flow ratio of 3 (about 22 volumes of organic phase per volume of aqueous) while the 20S is recycled 10 times at a flow ratio of 1 (about 10 volumes of organic per volume of aqueous).

C. CENTRIFUGATION OF WASHED SOLVENT

Small quantities of entrained solids and aqueous phase are continuously removed from the washed solvent by centrifugation. This removal is required to minimize maloperation of the solvent-extraction columns through emulsification and/or the mechanical transfer of adsorbed fission products by fine particles of miscellaneous origin. (See A2.5 above.)

1. Centrifuges

The liquid-liquid-solid centrifuges employed for the clarification of the solvent were designed and manufactured by the Bird Manufacturing Company especially for this application. The machines utilize a 48-in.-diameter solid bowl with a dynamic holdup of 90 gallons. The bowl is provided with internal baffles and two discharge lips at different radial distances from the axis of rotation for the two liquid overflows. The organic and aqueous phases are continuously removed via the discharge lips while the solids are accumulated in the bowl for periodic removal by slurrying. When the bowl is rotated at 1500 r.p.m. by 75-cycle, 550-volt current, from a motor-generator set, a force of 1060, 1400 to 1450, and 1500 times gravity is exerted at the organic overflow lip, the aqueous-organic interface, and the bowl wall, respectively. When rotated at 1200 r.p.m. by 60-cycle, 440-volt current, supplied from the transformer, the analogous forces developed are 680, 900 to 940, and 960 times gravity, respectively.

Each solvent system is provided with two of the centrifuges in parallel, so installed that the solvent may be routed through either machine or divided equally between the two centifuges. This flexibility permits efficient machine utilization under varying conditions of operating rate, ease of solvent clarification, bowl clean-outs, etc.

2. Process Protection by Clarification

The washed solvent normally entrains 3 to 10 grams of aqueous carbonate solution per liter of solvent; trace quantities of fine solids of indefinite composition with adsorbed fission products; and, in the case of off-standard operation, variable quantities of precipitated uranium. Recycling these materials to the process could be detrimental to plant operation. The introduction of the entrained 0.001 M to 0.003 M Na_2CO_3 with the extractants to the solvent-extraction columns would liberate gas equivalent to 2 to 6% of the organic volume. This quantity of gas would probably have a negligible effect on the operation of the solvent-extraction column. No operating difficulties are anticipated from this source unless the solvent centrifugation is bypassed coincidentally with gross (say ten times normal) entrainment from the organic wash columns. Solvent centrifugation reduces the sodium carbonate content to about 0.0003 M.(8)

Recycle of fine solids to solvent extraction may alter the path of the zirconium-niobium through the process by adsorption of these fission products and by limiting their decontamination by entrainment phenomena rather than chemical factors. The degree of this effect is not well established, being dependent on the nature and quantity of the solids recycled. The recycle of precipitated uranium could cause operating difficulties such as plugged valves and rotameters. Centrifugation effectively removes these solids.

3. Effects of Operating Variables

The residence time in the centrifuge required for effective clarification of the washed solvent is a function of the history of the solvent,

its temperature, and of the centrifugal force applied. Experimental evaluations of the effects of these variables are shown in Table IX-2

3.1 Solvent history

Development data to date indicate that a 1 to 1-1/2 minute centrifugation at 1000 times gravity is sufficient to separate any entrained aqueous solution or solids from the solvent under the proposed operating conditions. After the solvent is once carbonate-washed and the phases separated, subsequent washes are more easily separated whether these washes are carbonate, water, or nitric acid. In pilot-plant studies,[20] pumping of batch-washed solvent to the centrifuge apparently resulted in a greater degree of emulsification than gravity feeding of pulse-column-washed solvent, so that increased centrifugation time was required to separate the phases in the former case.

3.2 Temperature

The solvent clarification is most efficient at elevated temperatures, clear effluent being obtained at 45°C. in 25 to 35 per cent of the time required at 25°C. This improvement of centrifugability with a relatively minor temperature change may be the result of the decreased solvent viscosity and the increased density difference between the two phases.

3.3 Centrifugal force

The centrifugation of the Purex solvent at 45°C. is expected to provide adequate clarity at either 1500 r.p.m. (1050 to 1450 times gravity) or at 1200 r.p.m. (680 to 940 times gravity). Additional centrifugal force would provide little benefit, since centrifugation at 13,000 times gravity provided no observable improvement over centrifugation at 1000 times gravity.[25]

D. PROCEDURES

1. Normal Procedure

1.1 General

Two similar continuous solvent recovery systems, each consisting of a pulse column in series with two centrifuges in parallel, are used in the Purex Plant. The used solvent from the second uranium cycle (2EW) is treated in one system (the "second" solvent system) and all other organic waste streams are treated in the other system (the "first" solvent system). The separate system for the 2EW stream is necessary to provide a solvent "clean" enough for adequate decontamination of the uranium product from fission products. Process Flow Diagrams of the two systems, showing the operating equipment, instrumentation, and auxiliaries are presented as Figures IX-1 and IX-2. Details of the equipment will be found in Chapters XII (columns), XIII (tanks and centrifuges), and XVII (instrumentation).

In each of the two solvent systems, the used solvent is contacted countercurrently in the pulse column (the 10 and 20 Columns respectively) with a 2-1/2% solution of sodium carbonate which removes aqueous-soluble impurities from the solvent. The carbonate solution is recycled through the column

several times and is periodically replaced with fresh solution. The washed solvent overflows from the column to the centrifuges where entrained aqueous and solid matter are removed. The organic effluent from the centrifuge is the recovered solvent which is recycled to the process extraction columns. Make-up solvent is admitted into the IOF and 20F (feed) Tanks and is given the normal solvent recovery treatment prior to use in the process. Material balances for the two solvent systems are given in the Process Flow Diagrams, Figures IX-1 and IX-2.

1.2 Solvent make-up and pretreatment

Losses of solvent from the process by solubility and entrainment in the aqueous phase, and by other means, are compensated for by the addition of fresh TBP and diluent to the solvent inventory. Pilot-plant data(7) and Uranium Recovery Plant operating data(14) indicate that the over-all solvent losses may be of the order of one per cent of the solvent throughput (with some reduction possible with accumulating Purex-plant operating experience) with a somewhat higher proportional loss of TBP than of diluent. Based on these data, losses of 349 gallons of TBP and 525 gallons of diluent were assumed in Figures IX-1 and IX-2 for the daily processing of 10 tons of uranium at Purex HW #3 Flowsheet conditions. Losses by solubility, included in the above figures, are 24 gallons of TBP and 1 gallon of diluent per day. Losses from the first solvent system are made up by periodic additions from the second solvent system with sufficient fresh TBP added directly to the first solvent system to maintain the TBP concentration at 30 volume per cent. Depletion of the solvent inventory of the second solvent system is compensated for by the addition of fresh TBP and diluent. The solvent inventory is normally replenished when the total depletion in both solvent systems approaches the volume of the Solvent Blend Tank, 3000 gallons. At this time fresh TBP and diluent are blended in the Solvent Blend Tank for addition to the second solvent system, 20F is pumped to the IOF Tank for replenishment of the first solvent system inventory, and the fresh solvent in the Solvent Blend Tank is dropped to the 20F Tank. With the one per cent solvent loss and an operating rate of 10 tons uranium per day, a 3000-gallon batch of make-up solvent is required at 3.5-day intervals. Fresh TBP additions may be required less frequently, the exact frequency of TBP concentration adjustment remaining to be determined in the course of plant operating experience.

1.3 First solvent recovery system

Used solvent from the Co-Decontamination Cycle (HCW, 18.7 gal./min. at 10 tons U/day), from the Partition Cycle (ICW, 22.5 gal./min.), and from the Final Plutonium Decontamination Cycle (included in the ICW) is recovered in the first solvent recovery system. The two streams, HCW and ICW, flow into the IOF Tank (5000 gal.) from which the solvent is pumped, at a rate equal to that of the combined influent streams, to the IO Column. In the column the solvent is contacted with a 2-1/2% Na_2CO_3 solution, which is pumped from the IOW Tank (1700 gal.) at a flow rate of 13.9 gal./min. (organic/aqueous flow ratio, 3:1). The carbonate solution is returned from the column to the same tank (IOW) and is recycled through the column (nominally) about 7.4 times (22 volumes of solvent per volume

of aqueous) before being discarded. It is removed from the solvent system to the Waste Neutralizer, Tank F-16, via the ITO Wash Collection Tank, G-8. Depleted solution is removed and fresh solution is added in approximately 1000-gallon batches (approximately two batches per day at a 10-ton/day U processing rate). As shown on the Process Flow Diagram, Figure IX-1, the carbonate solution is replenished by additions of wash solution from the second solvent system. The temperature of the column is maintained at about 45°C. by heating the inlet streams.

Since the washed solvent leaving the top of the IO Column contains up to one per cent entrained aqueous phase as well as undesirable solids, it is routed through either or both of the two solvent centrifuges for clarification prior to reuse in the solvent-extraction columns. Two centrifuges are usually used in parallel (to provide 4.4 minutes of holdup time for clarification when processing 10 tons of uranium per day under Purex HW #3 Flowsheet conditions), but either may be used singly. The aqueous effluent from the centrifuge is returned directly to the IOW Tank. The clarified solvent flows to one of the ITO Tanks from which it is pumped continuously to the solvent-extraction columns for reuse. The second ITO Tank is connected in parallel and may serve as a batch washing tank or for reserve solvent storage, or it may interchange functions with the first ITO Tank. Periodically, as required, solids are slurried from the centrifuge bowls to the ITO Wash Collection Tank and then to the Neutralizer, F-16.

1.4 Second solvent recovery system

Used solvent from the second uranium cycle (2EW, 18.8 gal./min. at 10 tons U/day) is recovered in the second solvent recovery system. The major equipment pieces in the first and second solvent recovery systems are identical except that the 2TO Tanks (8000 gal.) are smaller than the ITO Tanks (15,000 gal.). As shown on the Process Flow Diagram, Figure IX-2, the 20 Column conditions differ from the IO Column conditions in that the organic flow is lower and the aqueous scrub flow is greater (organic/aqueous flow ratio = 1:1) in the second solvent recovery system (to provide good mass-transfer effectiveness at the lower superficial organic-phase flow rate, as discussed in Chapter V). The 2-1/2% Na_2CO_3 scrub solution is recycled about 10 times before being replaced by fresh solution (10 volumes of solvent per volume of aqueous). The depleted solution is transferred to the first solvent recovery system as make-up scrub for that system. Although two centrifuges are provided for the second solvent recovery system, only one is normally used; the other is a spare. The holdup time in the centrifuge is 4.8 minutes when processing uranium at ten tons per day under Purex HW #3 Flowsheet conditions.

1.5 Start-up and shutdown

The following is an outline of a possible start-up procedure for the first solvent recovery system. Start-up of the second is analogous.

(a) The column is normally left full of IOR scrub solution, when not in operation, with the interface controller on manual adjustment. If

it is not, sufficient IOR should be added to seal the pulse leg, thereby minimizing the quantity of solvent entering the IOW Tank via leakage through the pulse generator. Then the interface controller is placed on automatic adjustment and the level of scrub solution is permitted to come under its control. The IOR and IOF feed tanks are heated to their normal operating temperature of 45°C.

(b) Starting the centrifuge(s) and bringing the bowl(s) up to operating speed is the next step. Enough water is added to the bowl(s) to seal the aqueous outlets. (The solvent will flow out the aqueous outlets unless they are sealed.)

(c) The pulse generator and the IOF stream are started to establish the desired interface position. After the interface has been established and the column is full of IOF, the IOF stream is shut off.

(d) The IOR is started and slowly brought up to rate. (A too-rapid increase in IOR rate could cause flooding.)

(e) After the IOR has scrubbed the IOF in the column for 20 to 30 minutes, flow of the IOF stream is started and its rate slowly brought to the desired value. (The preliminary scrubbing is employed to prevent excessive transfer of impurities to the ITO receiver during start-up.)

A possible solvent recovery system shutdown procedure is as follows, the procedure for the second solvent recovery system being analogous to that for the first.

(a) The IOF is shut off but the IOR flow is continued, to scrub the solvent present in the column.

(b) Twenty minutes after the IOF is shut off, the interface controller is placed on manual adjustment, the IOW valve is closed, and the organic liquid is displaced with IOR. The column is normally left full of scrub solution.

(c) Ten minutes after the solvent has ceased to overflow to the centrifuge, the speed is reduced to 900 r.p.m. and most of the solvent in the bowl is skimmed to the solvent receiver. Care should be exercised to prevent skimming interfacial solids with the solvent. The speed is then reduced to 20 r.p.m. and the remaining bowl contents are jetted to the Wash Collection Tank. The solids are slurried from the bowl if necessary.

2. Detection and Remedy of Off-Standard Conditions

2.1 Detection of off-standard conditions

Maloperation of the solvent wash columns or the centrifuges results in a lowering of the quality of the recovered solvent and can be detected

through appropriate tests on the solvent. Maloperation of the solvent-extraction process due to poor quality solvent may be investigated by the same tests. The tests (described in Chapter XVIII)most commonly employed to establish solvent quality are total gamma, per cent TBP, DBP content, disengaging time, and uranium distribution ratio ("C"-contact E_a^o). Other tests, such as rate of uranium transfer, per cent solids, per cent aqueous phase, uranium or plutonium content, and spectrographic analysis, may be desirable under special circumstances. Specifications of the required purity of recovered Purex-Plant solvent remain to be established in the course of plant operating experience.

High uranium losses to the solvent waste streams may frequently be traced to complexing with DBP or other agents by testing for distribution ratio by the "C"-contact method. An abnormally high distribution ratio is a qualitative indication of the presence of a strong complexing agent. Uranium or plutonium losses to the aqueous waste streams may be caused by the gradual reduction of the TBP concentration through reaction and solubility.

Poor product decontamination in the solvent-extraction process may sometimes be attributable to the solvent, the responsible mechanism being extraction or entrainment of radioactivity. Extraction of fission products may result from the presence of complexing agents such as DBP or diluent reaction products and may result from the maloperation of the solvent wash columns. Entrainment of fission products in the solvent-extraction columns may result from the improper operation of the columns or from the presence of emulsifying agents in the system. Such agents can sometimes be detected by the determination of disengaging time or other physical tests. Spectrographic analysis may assist in determining the source of any solid material present.

Cross-contamination of plutonium by uranium may result from incomplete uranium removal from the solvent during the washing operation. This condition may be detected by uranium analysis.

2.2 Off-standard solvent wash column operation

Off-standard operation, such as flooding, emulsification, or defective scrub solution, in the solvent wash columns generally results in impaired solvent quality, as described in the preceding paragraphs. On the other hand, low solvent quality does not necessarily imply off-standard solvent wash column operation. While uranium, plutonium, and TBP degradation products should be adequately removed by normal operation of the "O" columns, fission products and some diluent reaction products are incompletely removed by this procedure and tend to establish equilibrium concentrations in the recovered solvent. These equilibria are largely determined by plant operating conditions such as the irradiation and "cooling" history of the uranium; the time, temperature, and concentration of nitric acid contact with solvent; etc. Should such extraneous factors be causing the low solvent quality, then corrective measures outside the scope of the normal solvent treatment procedure may have to be applied (correction of basic cause, special batch washing, etc.).

Flooding in a solvent wash column is indicated by an increase in the static pressure, a falling interface, and by abnormal effluent flow rates. The flood can normally be dissipated by reducing the volume velocity or the pulse frequency.

The symptoms of emulsification due to the presence of emulsion-forming materials in the wash columns may range from a small entrainment in the solvent stream to complete flooding. Such emulsification would generally result in an increase in the (unmeasured) separated aqueous flow from the centrifuge. In sufficiently severe cases, it may be evidenced by turbidity (due to unremoved aqueous phase) in the centrifuged solvent or by the flooding symptoms noted above. In addition to a reduction in volume velocity and pulse frequency, emulsification may sometimes be decreased by (a) increasing the Na_2CO_3 concentration to 4%, (b) increasing column temperature, and/or (c) by replacing the IOR with fresh solution.

The sodium carbonate scrub solution may become prematurely depleted and require replenishment because of excessive amounts of uranium or nitric acid in the waste solvent streams. Measurements of pH by means of meters on the IOF and 2OF Tanks indicate the HNO_3 concentrations in the incoming solvent and pH meters on the IOW and 2OW Tanks indicate the sodium carbonate concentrations of the scrub solutions. The Na_2CO_3 concentration should be increased if it drops below 1 weight per cent. Too low a carbonate concentration may lead to inadequate removal of fission products and dibutyl phosphate from the solvent. An abnormally high fission-product concentration in the incoming solvent will result in a corresponding build-up of radioactivity in the IOR and thus produce recovered solvent with unusually high fission-product contamination. Under these conditions the scrub solution may have to be replaced more frequently if the product decontamination is excessively impaired.

2.3 Off-standard centrifuge operation

Off-standard operation of the centrifuges normally results in an increase in entrained aqueous or solid material and in the radioactivity level of the solvent. Clarification may be improved by one or more of the following potential remedies: (a) increasing the temperature of the centrifuge feed; (b) decreasing the feed rate, possibly by utilizing the parallel centrifuge; (c) removing solids from the centrifuge if the sludge space is suspected of being full; (d) emptying the centrifuge to purge interfacial solids. Operation of the solvent treatment systems for short periods (several hours) without centrifugation should normally produce no observable detrimental effects on the solvent-extraction process.

2.4 Batch treatment of solvent

Although the normal solvent treatment is a continuous washing and clarifying process, batch washing of off-standard solvent may be effected in the second ITO and 2TO Tanks. This washing step may utilize special chemicals and prolonged contact times for the removal of specific impurities as discussed under A3.3. The solvent storage tanks available for this

use are equipped with agitators (propellers at three tank levels), coils for heating or cooling, and chemical addition lines. Each solvent system is provided with a decanter for the separation of the washes from the solvent. These washes are routed to the wash collection tank for disposal via the neutralizer or crib. During a plant shutdown, batch washing can also be carried out in the IOF or 20F Tank. Each of these tanks contains a Raschig-ring-packed section, a pump for recirculating aqueous solution through a series of spray nozzles, coils for heating or cooling, and chemical addition lines.

2.5 Disposal of non-recoverable solvent

Solvent which may be uneconomical to recover is discarded in an organic crib, 216-A2, whence it seeps into the ground. Such solvent, which is expected to be encountered infrequently, may be routed from the IOF or 20F Tank to the crib through the F13 Utility Tank, or pumped directly to the crib from the 2TO Tanks.

REFERENCES

(1) L. L. Burger, Private communication re contacting of TBP-diluent mixtures with oleum. H.A.P.O. 2-14-55.

(2) HW-19140 Uranium Recovery Technical Manual. Author not stated. 11-10-51. Pp. 1100 - 1117.

(3) HW-21685 Progress Report, Chemical Development, June, 1951. F. W. Woodfield. 7-18-51.

(4) HW-25635 Progress Report, Chemical Development, August, 1952. F. W. Woodfield. 8-31-52. P. 20.

(5) HW-26229 Progress Report, Chemical Development, October, 1952. F. W. Woodfield. 10-31-52. P. 26.

(6) HW-26937 Quarterly Report, Chemical Research, October through December 1952. O. F. Hill. 1-26-53. Pp. 96 - 97.

(7) HW-27298 Progress Report, Chemical Development, February, 1953. F. W. Woodfield. 2-28-53. P. 4.

(8) HW-28270 Progress Report, Chemical Development, May, 1953. F. W. Woodfield. 5-31-53. P. 5.

(9) HW-28616 Progress Report, Chemical Development, June, 1953. F. W. Woodfield. 6-30-53. P. 4.

(10) HW-29688 Revised Specifications of Purex Plant Solvent Extraction Columns Excluding 1BS, 2A, and 2B. R. E. Smith and W. B. Webster. 10-20-53.

(11) HW-29850 Progress Report, Chemical Development, October, 1953. F. W. Woodfield. 10-30-53. Pp. 15, 32.

(12) HW-30108 Progress Report, Chemical Development, November, 1953. F. W. Woodfield. 11-30-53. P. 13.

(13) HW-30109 Revised Specifications for Purex Plant 1BS, 2A, and 2B Columns. R. E. Smith. 12-1-53.

(14) HW-30635 Quarterly Progress Report, Chemistry Unit, October, November, December, 1953. A. H. Bushey. 2-1-54. P. 56.

(15) HW-31030 Progress Report, Chemical Development, February, 1954. 2-26-54. F. W. Woodfield. P. 13.

(16) HW-31260 Progress Report, Plant Processes Unit, February, 1954. O. F. Hill. 3-15-54. P. 10.

(17) HW-31373 Purex Chemical Flowsheet HW No. 3. R. E. Smith. 4-6-54.

(18) HW-31757 Progress Report, Chemical Development, April, 1954. F. W. Woodfield. 4-30-54. P. 5.

(19) HW-31962 Pilot-Plant Studies of Purex IOO Clarification by a 40-In. Bird Liquid-Liquid Centrifuge. J. T. Krieg. 5-7-54.

(20) HW-33682 Partition of Dibutyl Phosphate. L. L. Burger. 11-8-54.

(21) KAPL-820 Purex Solvent Recovery. J. H. Holmes and A. S. Jennings. 10-7-52.

(22) KAPL-959 Report of the Chemistry and Chemical Engineering Section for May, June, July, 1953. Author not stated. 9-25-53.

(23) ORNL-1224 Continuous Solvent Recovery Process Using Pulse Contacting Column. C. V. Ellison. 4-1-52.

(24) ORNL-1519 Terminal Report for ORNL Pilot Plant Investigation of the Purex Process. D. O. Darby and J. M. Chandler. 2-5-54. Pp. 91 - 104.

(25) ORNL-1548 Purex Process Laboratory Development Progress Report, August 1952 through January 1953. J. R. Flanary et al. 6-30-53.

(26) TID-2012 Reactor Science and Technology, March 1954. "The Purex Process at Oak Ridge National Laboratory," J. R. Flanary, Pp. 9 - 34.

[redacted]

TABLE IX-1

SOLVENT DECONTAMINATION
EFFECT OF WASHING AGENT, TEMPERATURE, AND CONTACT TIME

Data from HW-29850[11]

Initial Organic Conditions: HCW from "Mini" (miniature mixer-settler) run with HCF at 50% U saturation, from HA "Mini" run with 90-day "cooled" dissolver solution. Studies made about 20 days after solvent extraction. HCW activity: beta = 4.89×10^8 counts/(min.)(gal.); gamma = 1.88×10^4 microcuries/gal. Gamma scan: 60% Zr-Nb, 40% Ru.

Type of Contact: Simple batch.

Volume Ratio: Organic/aqueous = 5/1.

Washing Agent	Temperature, °C.	5-Minute Contact Time		20-Minute Contact Time		40-Minute Contact Time	
		Beta D.F.	Gamma D.F.	Beta D.F.	Gamma D.F.	Beta D.F.	Gamma D.F.
5% Na_2SO_4	25	2.06	2.37	2.34	2.91	---	---
5% Na_2SO_4	50	3.18	3.45	3.73	3.66	---	---
2-1/2% $Na_2C_2O_4$	25	4.04	8.17	6.35	12.4	---	---
2-1/2% $Na_2C_2O_4$	50	---	26.8	12.2	28.1	---	---
5% Na_2SO_3	50	---	---	48.9	8.21	---	---
3% Na_2CO_3	25	57.5	117.5	52.6	94.0	70.9	134.3
3% Na_2CO_3	50	87.3	195.8	106.3	---	143.8	391.6
1% NaOH	25	132.2	170.9	148.2	400	212.6	417.7
1% NaOH	50	203.8	354.7	257.4	508.1	376.2	606.4
5% NaOH	25	---	---	32.6	33.6	---	---
5% NaOH plus 0.1 M Na_2SnO_2	25	---	---	55.6	45.8	---	---
5% Versene	25	24.4	22.4	---	---	---	---

TABLE IX-2

CENTRIFUGATION CONDITIONS GIVING CLEAR PUREX-TYPE SOLVENT

Solvent History[a]	Centrifuge (b)	Temp., °C.	Centrifugal Force,[c] Ratio to Gravity, G	Centrifugation Time, Minutes
(1) IAX, new materials	Lab.	25	1000	1.5[d]
(2) RCW, from UR Plant	Lab.	25	1000	5[d]
(3) Solution 2, after second carbonate wash	Lab.	25	1000	2
(4) ROO from UR Plant	Lab.	25	1000	2
(5) IOO fed by gravity from 27-in.-diam. ID Column, Hanford "Cold" Semiworks (Bldg. 321)	40	25	1000 - 1300	4.5[e]
(6) Solution 5	40	45	1000 - 1300	1.2[e]
(7) IOO pumped from agitated-tank carbonate wash, Hanford "Cold" Semiworks	40	25	1000 - 1300	5
(8) Solution 7	40	25	1000 - 1300	2.2
(9) Solution 7, after second carbonate wash	12	25	580 - 760	3
(10) IOO from Oak Ridge "hot" pilot-plant runs	12	37±2	660 - 850	1[e]

NOTES:

(a) In all cases noted, the organic phase was washed with 2 to 5% Na_2CO_3 solution just prior to centrifugation and contained ca. 3 to 5 grams per liter of entrained aqueous carbonate solution. Case 3 presents the results of a second carbonate wash. All of the tests were performed on solvent prepared with Shell Deodorized Spray Base, except Case 10, which utilized Amsco 123-15.

(b) The "Lab" centrifuge was an International No. 2 bucket type for batch centrifugation. The 40-in. centrifuge was a Bird solid-bowl machine modified for this use by the Bird Manufacturing Company; it served as the prototype for the 48-in. Purex-Plant model. The 12-in. centrifuge was a Bird solid-bowl machine modified for this use by Chemical Development Subsection, Hanford.

(c) Where two values are quoted, the first applies at the organic overflow lip while the second applies at the approximate location of the organic-aqueous interface.

(d) These solutions were then washed with water and the centrifugation times required to reclarify solvent were determined to be 0.5 and 1.5 minutes, respectively.

(e) The separated aqueous phase was cloudy and entrained 0.04 to 0.1% of the solvent flow in the case of the 40-in. machine and 0.01% of the solvent flow in the case of the 12-in. machine.

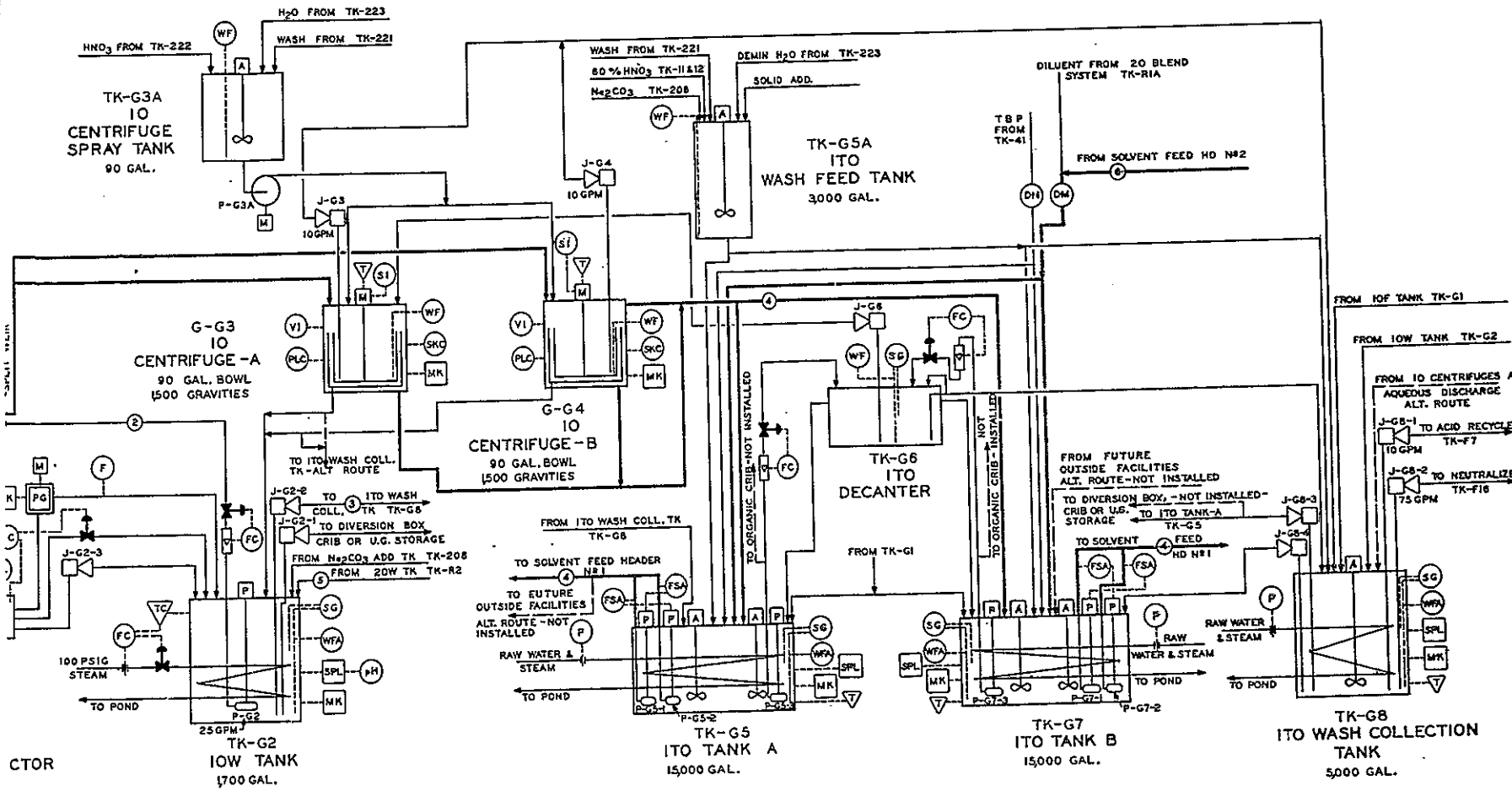

20W)	6 Make-Up (2TO)		7 Make-Up (TBP)	
50	516		85	
Wt. %		Wt. %		Wt. %
96.4				
0.1				
2.2				
0.4				
0.3	2.42	34.6	8.1	100
0.6	4.58	65.4		
33	0.84		0.97	
5	45		25	
	2		3	
	0		0	

NOTES:

1) Symbol Abbreviations

- A — Agitator
- DM — Displacement Meter
- DP — Differential Pressure
- F — Flow Recorder
- FC — Flow Controller
- FSA — Flow Switch Alarm
- IC — Interface Control
- M — Motor
- MK — Microphone
- P — Pressure
- P — Submerged Pump
- pH — pH Meter
- PLC — Flow Control
- SG — Specific Gravity
- SI — Speed Indicator
- SKC — Skimmer Control
- SPL — Sampler
- T — Temperature
- TA — Temperature Alarm
- TC — Temperature Control
- VI — Vibration Indicator
- WF — Weight Factor
- WFA — Weight Factor Alarm
- WF CA — Weight Factor Controller Alarm

2) Basis: 10 short tons of uranium per day, instantaneous rate; exposure of 600 MWD/T and 90-day "cooling" period; HW #3 Flowsheet.

3) The given volume of tanks is to overflow.

4) Volumes given do not include jet dilution.

5) Streams (3) (5) (6) and (7) are removed or added in batches. These batch additions are not shown as such in the material balance.

6) Make-up TBP (Code (7)) is estimated, based on Uranium Recovery Plant and pilot-plant experience.

7) Fresh scrub solution is added to the second cycle. Second-cycle scrub is then added to the first.

8) Entrained aqueous in organic effluent from the IO Contactor is assumed as 1%.

9) Uranium loss in the IOF (Code (1)) is assumed to be 0.2% of the uranium originally in the HAF.

FIGURE IX-1

PROCESS FLOW DIAGRAM

SOLVENT TREATMENT SYSTEM NO. 1

[redacted]

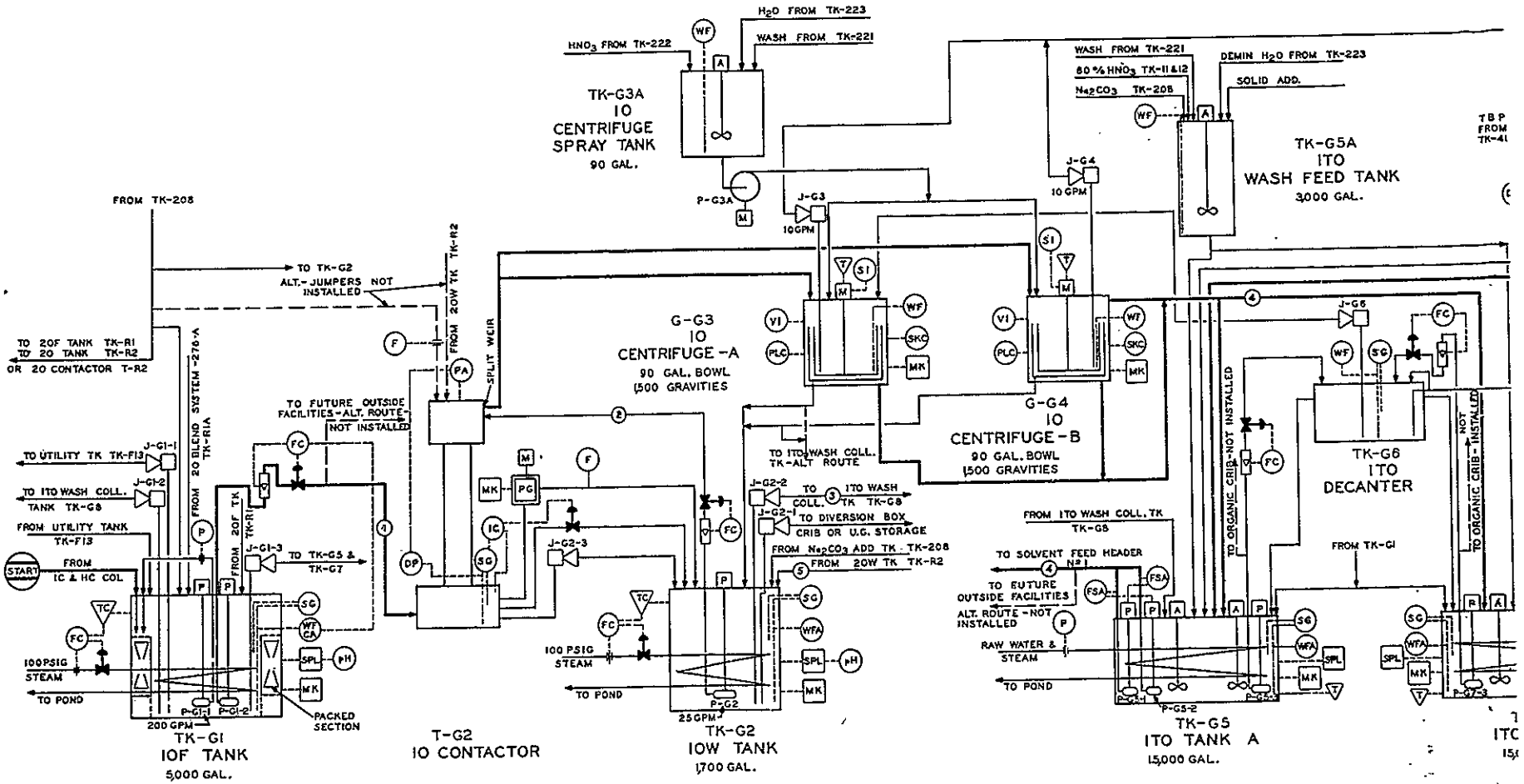

Code	1 IOF		2 IOR (Initial)		3 IOW (Depleted)		4 ITO		5 IOS (20W)		6 Make-Up (2TO)		7 Make-Up (TEF)	
Stream														
Flow, Gal./Min.	41.2		13.9				41.7							
Flow, Gal./Day	59,470		20,049		2,750		60,071		2,750		516		85	
Components/Gal.		Wt. %		Wt. %		Wt. %		Wt. %		Wt. %		Wt. %		Wt. %
UF, lb.	0.002													
H_2O, lb.			8.30	96.0	8.30	95.7			8.30	96.4				
HNO_3, lb.	Trace													
$NaNO_3$, lb.			0.02	0.3	0.04	0.4			0.01	0.1				
Na_2SO_4, lb.			0.17	2.0	0.15	1.8			0.19	2.2				
$Na_3PO_4(CO_3)_3$, lb.			0.07	0.8	0.10	1.2			0.03	0.4				
TBP, lb.	2.42	34.6	0.03	0.3	0.03	0.3	2.43	34.7	0.03	0.3	2.42	34.6	8.1	100
Diluent, lb.	4.59	65.4	0.05	0.6	0.05	0.6	4.58	65.3	0.05	0.6	4.58	65.4		
Fe	3.2×10^{-7}				6.9×10^{-6}									
Gamma curies	0.008				0.2									
Physical Properties														
Sp. Gravity	0.84		1.03		1.02		0.84		1.03		0.81		0.97	
Temperature, °C	45		45		45		45		45		45		25	
Viscosity, cp[25]	2		1		1		2		1		2		3	
Phase	0		1		1		0		1		0		0	

NOTES:

1) Symbol Abbreviations

A	Agitator	FLC	Flow Control
DM	Displacement Meter	SG	Specific Gravity
DP	Differential Pressure	SI	Speed Indicator
F	Flow Recorder	SKC	Skimmer Control
FC	Flow Controller	SPL	Sampler
FSA	Flow Switch Alarm	T	Temperature
IC	Interface Control	TA	Temperature Alarm
M	Motor	TC	Temperature Control
MK	Microphone	VI	Vibration Indicator
P	Pressure	WF	Weight Factor
P	Submerged Pump	WFA	Weight Factor Alarm
pH	pH Meter	WFCA	Weight Factor Controller Alarm

2) Basis: 10 short tons of uranium per day, instantaneous rate; exposure of and 90-day "cooling" period; HW #3 Flowsheet.

3) The given volume of tanks is to overflow.

4) Volumes given do not include jet dilution.

5) Streams (3) (5) (6) and (7) are removed or added in batches. These batch are not shown as such in the material balance.

6) Make-up TEF (Code (7)) is estimated, based on Uranium Recovery Plant and p experience.

7) Fresh scrub solution is added to the second cycle. Second-cycle scrub is to the first.

8) Entrained aqueous in organic effluent from the IO Contactor is assume. as

9) Uranium loss in the IOF (Code (1)) is assumed to be 0.2% of the uranium c in the HAF.

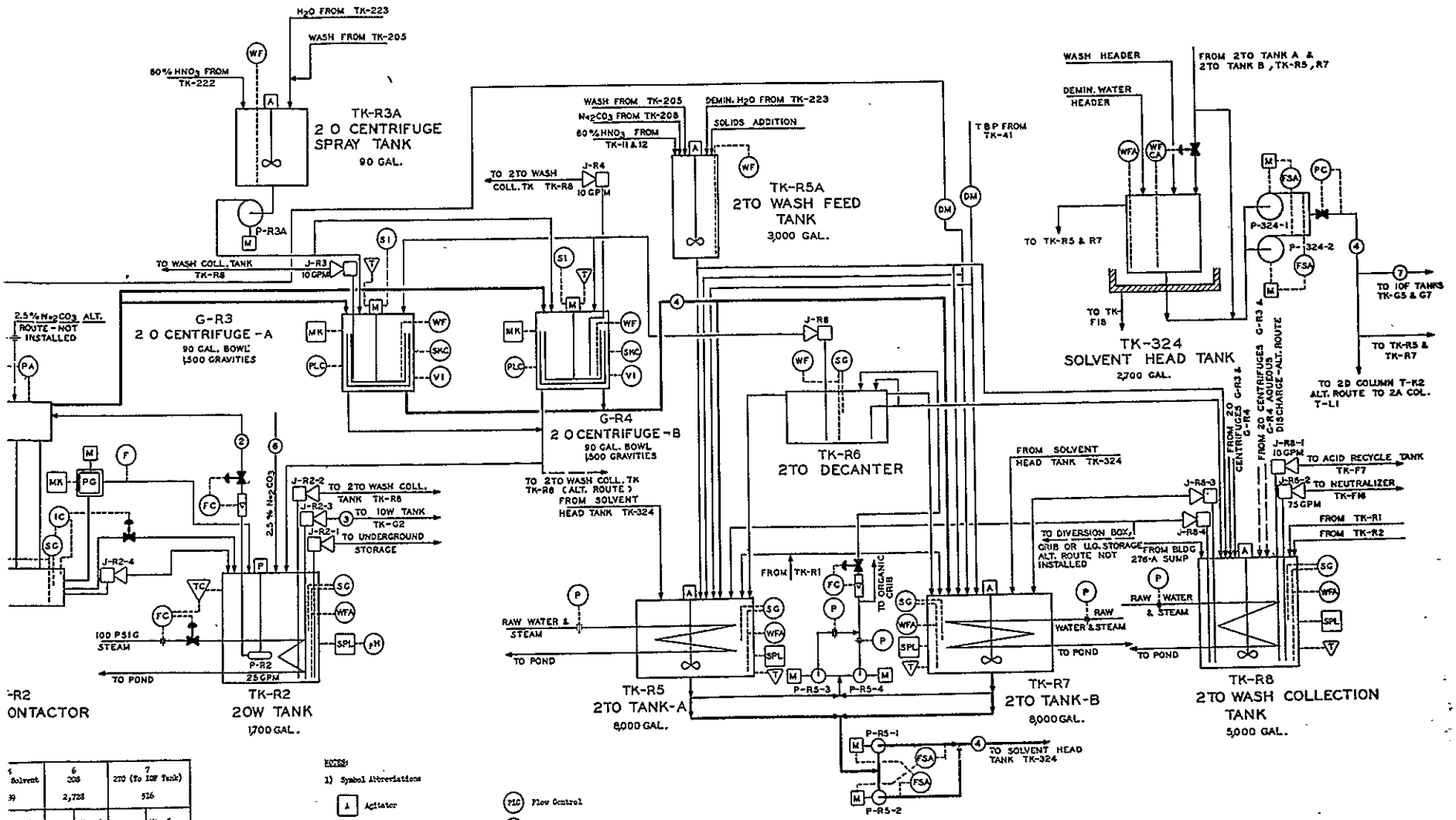

	6		7
Solvent	208		2TO (To 10F Tank)
39	2,722		516
Wt. %		Wt. %	Wt. %
	8.37	97.5	
	0.21	2.5	
35.2 51.8			2.42 2.58
			34.6 65.4
5	1.03 25 A		0.84 45 2 0

NOTES:

1) Symbol Abbreviations

- A — Agitator
- DM — Displacement Meter
- DP — Differential Pressure
- F — Flow Recorder
- FC — Flow Controller
- FSA — Flow Switch Alarm
- IC — Interface Control
- M — Meter
- MK — Microphone
- P — Pressure
- P — Submerged Pump
- PC — Pressure Controller
- PH — pH Meter
- PLC — Flow Control
- SG — Specific Gravity
- SI — Speed Indicator
- SKC — Skimmer Control
- SPL — Sampler
- T — Temperature
- TA — Temperature Alarm
- TC — Temperature Control
- VI — Vibration Indicator
- WF — Weight Factor
- WFA — Weight Factor Alarm
- WF CA — Weight Factor Controller Alarm

2) Basis: 10 short tons of uranium per day, instantaneous rate; exposure of 600 MWD/T and 90-day "cooling" period; HW (3) Flowsheet.

3) The given volume of tanks is to overflow.

4) The volumes given do not include jet dilution.

5) Streams (3) (5) (6) and (7) are removed or added in batches. These batch additions are not shown as such in the material balance.

6) Make-up solvent (Code (5)) is estimated, based on Uranium Recovery Plant and pilot-plant experience.

7) Fresh scrub solution is added to the second cycle. Second-cycle scrub is then added to the first.

8) Entrained aqueous in organic effluent from the 2D Contactor is assumed as 1%.

9) Uranium loss in the 20F (Code (1)) is assumed to be 0.2% of the uranium originally in the 20F.

FIGURE IX-2

PROCESS FLOW DIAGRAM

SOLVENT TREATMENT SYSTEM NO. 2

[redacted]

[redacted]

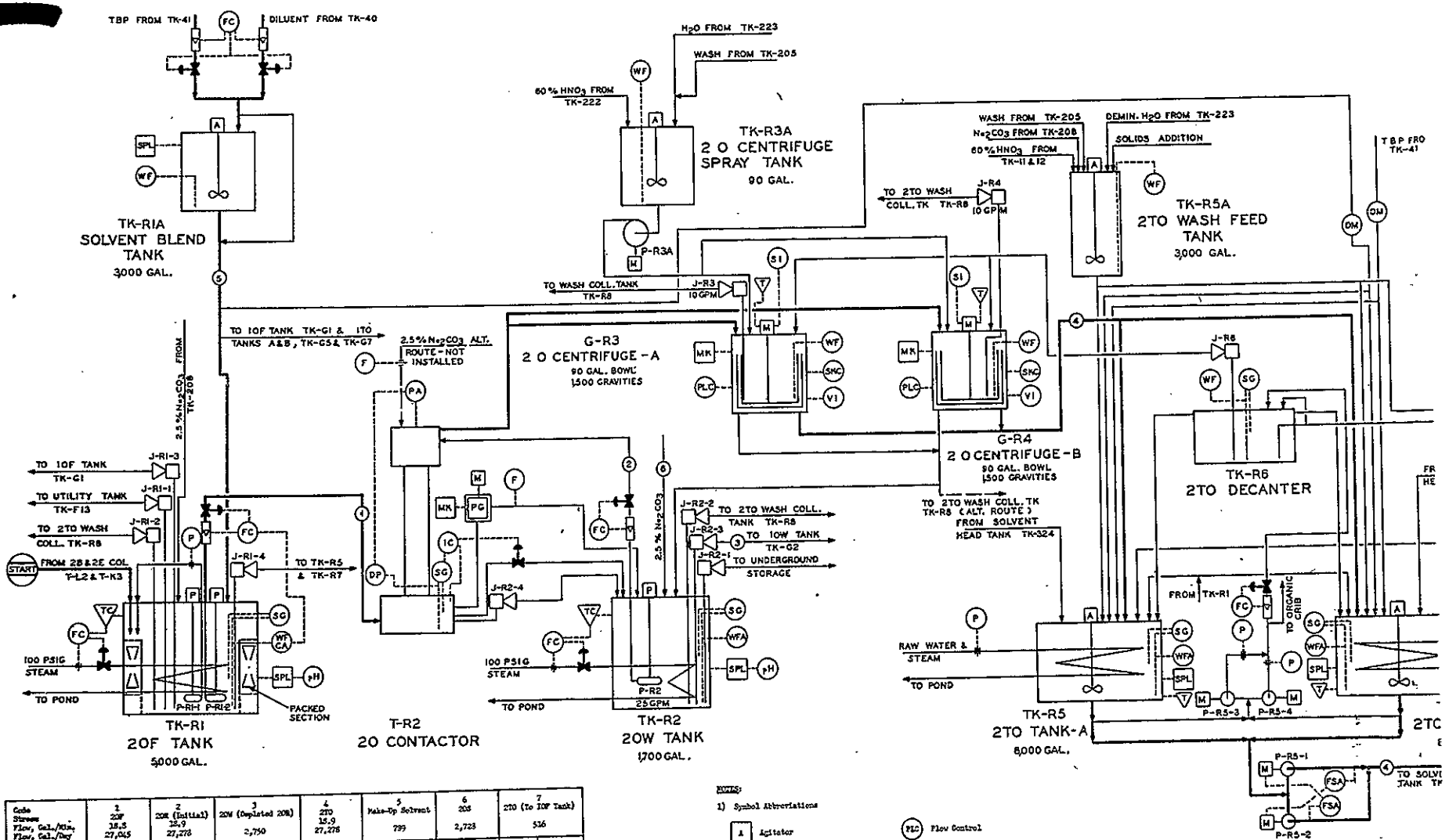

Code	1		2		2		3		4		5		6		7	
Stream	2OF		2OR (Initial)		2OW (Depleted 2OR)		2TO		Make-Up Solvent		2OS		2TO (To 1OF Tank)	
Flow, Gal./Min.	18.5		18.9				15.9							
Flow, Gal./Day	27,045		27,278		2,750		27,278		799		2,723		516	
Components/Gal.		Wt. %		Wt. %		Wt. %		Wt. %		Wt. %		Wt. %		Wt. %
UF, lb.	0.003		8.30	96.4	8.30	96.4					8.37	97.5		
H_2O, lb.														
HNO_3, lb.	Trace		0.05	0.1	0.01	0.1					0.21	2.5		
NaNO, lb.			0.20	2.4	0.19	2.2								
Na_2CO_3, lb.			0.02	0.2	0.03	0.4								
$Na_2UO_2(CO_3)_3$, lb.			0.03	0.3	0.03	0.3	2.43	34.7	2.71	38.2			2.42	34.6
TBP, lb.	2.43	34.6												
Diluent, lb.	4.58	65.4	0.05	0.6	0.05	0.6	4.58	65.3	4.95	61.8			4.58	65.4
Physical Properties														
Sp. Gravity	0.84		1.03		1.03		0.84		0.85		1.03		0.84	
Temperature, °C.	45		45		45		45		25		25		45	
Viscosity, cp25	2		1		1				2				2	
Phase	0		A		A		0		0		A		0	

NOTES:

1) Symbol Abbreviations

- A — Agitator
- DM — Displacement Meter
- DP — Differential Pressure
- F — Flow Recorder
- FC — Flow Controller
- FSA — Flow Switch Alarm
- IC — Interface Control
- M — Motor
- MK — Microphone
- P — Pressure
- P — Submerged Pump
- PC — Pressure Controller
- PH — pH Meter
- PLC — Flow Control
- SG — Specific Gravity
- SI — Speed Indicator
- SKC — Skimmer Control
- SPL — Sampler
- T — Temperature
- TA — Temperature Alarm
- TC — Temperature Control
- VI — Vibration Indicator
- WF — Weight Factor
- WFA — Weight Factor Alarm
- WF CA — Weight Factor Controller Alarm

2) Basis: 10 short tons of uranium per day, instantaneous rate; exposure of 600 MWD/T and 90-day "cooling" period; Hf #3 Flowsheet.

3) The given volume of tanks is to overflow.

4) The volumes given do not include jet dilution.

5) Streams (3) (5) (6) and (7) are removed or added in batches. These batch additions are not shown as such in the material balance.

6) Make-up solvent (Code (5)) is estimated, based on Uranium Recovery Plant and pilot-plant experience.

7) Fresh scrub solution is added to the second cycle. Second-cycle scrub is then added to the first.

8) Entrained aqueous in organic effluent from the 2O Contactor is assumed as 1%.

9) Uranium loss in the 2OF (Code (1)) is assumed to be 0.2% of the uranium originally in the HF.