[redacted]
(CLASSIFICATION)

PROJECT [redacted]

Atlantic Richfield Hanford Company
Richland, Washington 99352

LITERATURE ACCESS CATEGORIES

HANFORD CATEGORY C-65

DECLASSIFIED

DOCUMENT NO.

ARH-231

SERIES AND COPY NO.

[redacted]

DATE

December 29, 1967

ISSUING FILE

BATTELLE-NORTHWEST
RECEIVED
JAN 9 1968
CIRCULATING COPY
TECHNICAL INFO. SECTION

TITLE AND AUTHOR

HANFORD LOW LEVEL WASTE MANAGEMENT

REEVALUATION STUDY

Compiled by R. J. Sloat

XXX RESTRICTED DATA

THIS DOCUME[redacted]ONTAINS RESTRIC[redacted]D DATA A[redacted]INED IN T[redacted] ATOMIC [redacted]RGY ACT OF 19[redacted] TRANS[redacted]AL OR TH[redacted]CLOSUR[redacted] ITS CONTENTS I[redacted] MANNE[redacted] AN UNAU[redacted]IZED P[redacted]N IS PROHIBITED.

☐ OTHER OF[redacted] CLASS[redacted] INFORMATION

THIS M[redacted]ERIAL CON[redacted] INFOR[redacted]N AFFECTING T[redacted] NATION[redacted] DEFENSE OF [redacted] UNITED [redacted]S WITHIN THE MEANING [redacted] ESPIONAG[redacted]S, TITL[redacted] S.C. SECS. 793 AND 794, [redacted]RANSMISS[redacted]R REVEL[redacted] OF WHICH IN ANY MA[redacted]TO AN UN[redacted]THORIZED P[redacted]ON IS PROHIBITED BY LAW.

THIS DOCUMENT M[redacted]T NOT BE LEFT U[redacted]ATTENDE[redacted]R WHERE AN UNAUTHORIZED PE[redacted]N MAY HAVE AC[redacted] TO IT. [redacted]N NOT IN USE, I[redacted]MUST [redacted] STO[redacted] AN APPROV[redacted]CKED R[redacted]TORY WITHIN [redacted]PPROVED [redacted]D AREA. [redacted] IT IS [redacted]R POSSESSIO[redacted] UNTIL YO[redacted] RETURN[redacted] TO YO[redacted] [redacted]ASSIFIED D[redacted]T RESPON[redacted]Y STATIO[redacted] IS YOU[redacted] [redacted]ONSIBILITY T[redacted] IT AND [redacted]NTENTS [redacted]N THE L[redacted] THIS PROJECT [redacted]OM ANY U[redacted]HORIZED PERSON. ITS T[redacted]TAL TO, AND [redacted]AGE AT [redacted] PLACE OF RESIDENC[redacted]HIBITED. IT [redacted]E DUPLICATED ONLY IN ACCORDANCE [redacted]XISTING SECUR[redacted] REGULATIONS. ALL PERSONS READING [redacted] DOCUMENT ARE REQUESTED TO SIGN IN THE SPACE BELOW.

ROUTE TO:	PAYROLL NO.	LOCATION	FILES ROUTE DATE	SIGNATURE AND DATE
DB ~~Cantrell~~ ~~Bass~~				
~~T.S. Soine~~	~~32160~~	~~325~~	~~JAN 16 1968~~	~~T.S. Soine 2-7-68~~
H.T. Fullam	32366	325	JUL 31 1968	

BEST AVAILABLE COPY

Reviewed and Approved for Public Release by the NSAT
[signature] PNNL ADD
2/9/01 Date

[redacted]

DECLASSIFIED

54-6100-150 (8-67)

[redacted]
(CLASSIFICATION)

DECLASSIFIED [redacted]

HANFORD CATEGORY C-65

ARH-231

This document [redacted] contains restricted data [redacted] defined [redacted] Atomi[redacted] Energy [redacted] 19[redacted] trans[redacted] [redacted] of its co[redacted] in any [redacted]r to [redacted]un-authorized person is prohibited.

This document consists of 242 pages, [redacted]

HANFORD LOW LEVEL WASTE MANAGEMENT REEVALUATION STUDY

December 29, 1967

Compiled by
R. J. Sloat
Research and Engineering
Chemical Processing Division

Atlantic Richfield Hanford Company
Richland, Washington 99352

Classification Cancelled (Change to UNCLASSIFIED)
By Authority of printout
dated 11-14-74
By L. Pope 9/10/75
JE Sdely 2-6-01

NOTICE

THIS REPORT WAS PREPARED FOR USE WITHIN ATLANTIC RICHFIELD HANFORD CO. IN THE COURSE OF WORK UNDER ATOMIC ENERGY COMMISSION CONTRACT AT(45-1)-2130, AND ANY VIEWS OR OPINIONS EXPRESSED IN THE REPORT ARE THOSE OF THE AUTHOR ONLY. THIS REPORT IS SUBJECT TO REVISION UPON COLLECTION OF ADDITIONAL DATA.

LEGAL NOTICE

THIS REPORT WAS PREPARED AS AN ACCOUNT OF GOVERNMENT SPONSORED WORK. NEITHER THE UNITED STATES, NOR THE COMMISSION, NOR ANY PERSON ACTING ON BEHALF OF THE COMMISSION:

A. MAKES ANY WARRANTY OR REPRESENTATION, EXPRESSED OR IMPLIED, WITH RESPECT TO THE ACCURACY, COMPLETENESS, OR USEFULNESS OF THE INFORMATION CONTAINED IN THIS REPORT, OR THAT THE USE OF ANY INFORMATION, APPARATUS, METHOD, OR PROCESS DISCLOSED IN THIS REPORT MAY NOT INFRINGE PRIVATELY OWNED RIGHTS; OR

B. ASSUMES ANY LIABILITIES WITH RESPECT TO THE USE OF, OR FOR DAMAGES RESULTING FROM THE USE OF ANY INFORMATION, APPARATUS, METHOD, OR PROCESS DISCLOSED IN THIS REPORT.

AS USED IN THE ABOVE, "PERSON ACTING ON BEHALF OF THE COMMISSION" INCLUDES ANY EMPLOYEE OR CONTRACTOR OF THE COMMISSION, OR EMPLOYEE OF SUCH CONTRACTOR, TO THE EXTENT THAT SUCH EMPLOYEE OR CONTRACTOR OF THE COMMISSION, OR EMPLOYEE OF SUCH CONTRACTOR PREPARES, DISSEMINATES, OR PROVIDES ACCESS TO, ANY INFORMATION PURSUANT TO HIS EMPLOYMENT OR CONTRACT WITH THE COMMISSION, OR HIS EMPLOYMENT WITH SUCH CONTRACTOR.

[redacted]

Ex[redacted]ded from Automati[redacted]radin[redacted] a[redacted]lassification

DECLASSIFIED

[redacted]

54-6000-020 (8-67) AEC-RL RICHLAND, WASH.

DISTRIBUTION

AEC-RL:

1. P. A. Craig
2-4. O. J. Elgert
5. B. P. Helgeson
6. D. G. Williams

BNW:

7. F. W. Albaugh
8. D. B. Cearlock
9. C. R. Cooley
10. E. A. Coppinger
11. D. R. deHalas
12. P. F. X. Dunigan
13. R. F. Foster
14. W. A. Haney
15. J. F. Honstead
16. R. L. Junkins
17. A. M. Platt
18. C. J. Touhill

DUN:

19. C. D. Harrington
20. P. G. Jerman

HES:

21. J. M. Frame

ITT:

22. R. F. Pryce

ARHCO:

23. G. E. Backman
24. S. J. Beard
25. L. I. Brecke
26. D. J. Brown
27. M. H. Campbell
28. H. L. Caudill
29. R. P. Corlew
30. W. C. Cronin
31. J. B. Fecht
32. J. W. Fillmore
33. L. W. Finch
34. D. R. Gustavson
35. H. D. Haberman
36. G. L. Hanson
37. M. K. Harmon
38. W. M. Harty
39. H. H. Hopkins
40. R. D. Jensen
41. M. J. Kirkman
42. L. M. Knights
43. J. R. LaRiviere
44. M. L. Madeen
45. T. A. McCoy
46. R. W. McCullugh
47. G. C. Oberg
48. H. B. Off
49. H. C. Rathvon
50. L. M. Richards
51. R. E. Roberts
52. L. W. Roddy
53. J. M. Schultz
54. H. P. Shaw
55. R. J. Sloat
56. O. V. Smiset
57. A. E. Smith
58. P. W. Smith
59. R. E. Smith
60. W. G. Smith
61. R. E. Tomlinson
62. R. L. Walser
63. J. H. Warren
64. D. D. Wodrich
65. L. L. Zahn
66-67. ARHCO Files
68-100. Extra

ACKNOWLEDGEMENTS

The preparation of a document of this scope required a cooperative effort of many representatives from the Atlantic Richfield Hanford Company engineering, financial and secretarial staff. Battelle experts in the field of radioactive waste management were key contributors to portions of the study. Hanford Engineering Services provided the cost estimates for the conceptual designs.

While it is impossible to give adequate recognition to all contributors to the study, the author would like to thank and acknowledge the following personnel who contributed directly to the study.

BNW:
D. B. Cearlock
E. A. Coppinger
C. E. Elderkin
W. A. Haney
R. W. Nelson
J. V. Ramsdell
J. R. Raymond

HOHF:
D. E. Anderson

HES:
R. L. Lysher
A. L. Vosmer

ARHCO:
D. J. Brown
H. L. Caudill
J. B. Fecht
J. W. Fillmore
H. D. Haberman
G. L. Hanson
R. D. Jensen
M. J. Kirkman
J. R. LaRiviere
L. R. Michels
G. C. Oberg
R. E. Roberts
W. G. Smith
R. E. Tomlinson
D. L. Uebelacker
R. L. Walser
D. D. Wodrich
R. A. Yoder
H. A. Zweifel

Special thanks are extended to Duplicating Services and to the following ARHCO secretaries who typed and assembled the final document:

Charlotte Beggerow
Norma Hubbard

TABLE OF CONTENTS

		Page
I.	INTRODUCTION	5
II.	SUMMARY AND CONCLUSIONS	8
III.	LOW LEVEL AQUEOUS WASTE DISPOSAL AND TREATMENT	9
IV.	WASTE ORGANIC DISPOSAL AND TREATMENT	14
V.	GASEOUS WASTE DISPOSAL	15
VI.	DISPOSAL OF RADIOACTIVE SOLIDS	16
VII.	SITE CLEANUP CONSIDERATIONS	17
VIII.	EFFECTS OF INCREASED WATER TABLE ELEVATIONS	19
IX.	ACTION PLAN	20
X.	RESEARCH AND DEVELOPMENT	22
XI.	HAZARDS	23
XII.	REFERENCES	23
TABLE I		25
APPENDIX A		
APPENDIX B		
APPENDIX C		
APPENDIX D		
APPENDIX E		
APPENDIX F		

DECLASSIFIED

HANFORD LOW LEVEL WASTE MANAGEMENT
REEVALUATION STUDY

I. INTRODUCTION

The protection of important life forms in the environment from potential damage from ionizing radiation has been of paramount concern ever since the processing of irradiated nuclear fuels to recover plutonium was initiated at Hanford on the 200 Area plateau in 1944. Since no technology or criteria then existed for the ultimate disposal of residual radioactive materials, process wastes containing nearly all the radioactive fission products and transuranic elements were stored in underground tanks as alkaline slurries. Processing facilities and operations currently being started up are designed to remove the majority of the long-lived heat emitters, cesium-137 and strontium-90, and evaporate the residual salt wastes to salt cakes for long-term storage in the existing underground tanks. This waste management program is described in some detail in Reference 1. The separated cesium and strontium are to be stored as solution within the processing building (B Plant) until facilities are provided for high-integrity packaging for long-term storage. A review of the foreseeable hazards associated with the proposed long-term storage of highly radioactive salts in underground tanks was recently completed (Reference 2). It was concluded that the relevant geological, geochemical and meteorological conditions are such that no natural force would create a hazard to life forms in the foreseeable future and that, assuming minimal continuing administrative controls and surveillance, the relative isolation and elevation are such that no potential man-initiated change short of an atomic bomb would be likely to displace the stored materials.

Although most of the processed fission products and transuranic elements have been either recovered or stored in tanks, a small fraction of these radioisotopes have been released to the environment at low concentrations under controlled conditions. In conducting these disposal operations, advantage has been taken of the favorable geochemical and meteorological conditions existing at the site. The chemical processing activities are located on a plateau in an area of low seismic activity and population density. Richland, more than 20 miles distant, is the closest city and has a population of 26,000. The separations plants and waste handling facilities have been built on extensive alternating beds of sands, clays, and gravels. For most of the 200 Area plateau these relatively uniform and continuous earth deposits exist in depths ranging from 200 to 300 feet above the existing ground water table. The soils beneath the 200 Areas, under properly controlled waste discharge conditions, act as ion exchange beds for the long-lived radionuclides cesium-137, strontium-90, and plutonium. These radionuclides are almost quantitatively held on the soil as the low-level aqueous waste passes through.

The ground water movement beneath the 200 Areas and to the Columbia River, greater than 12 miles distant, is quite well known. Presently, ground water leaving the 200 Areas reaches the Columbia River in a minimum travel time of 10 to 12 years. Consequently, those fission

DECLASSIFIED

[redacted]

DECLASSIFIED

products and salts which do get in the ground water at the 200 Areas travel slowly to the river. Short-lived fission products decay significantly as they migrate toward the river in the ground water. The combined effects of decay, ion exchange and ground water dilution produce radionuclide concentrations in ground water entering the river which are well below allowable drinking water concentrations before river dilution is considered. The area surrounding Hanford is arid. Annual rainfall ranges from 5 to 10 inches per year. Essentially all precipitation on the 200 Area plateau is held in the top few feet of soil and reevaporates rather than draining through the soil to the ground water. Therefore, barring a major change in climate, fission product inventories buried in the ground and isolated from man-dependent forces, should remain essentially static for centuries. The 200 Area plateau is 300 to 350 feet above the Columbia River and is not susceptible to major flooding even if upriver dams were to break.

Very large volumes of slightly radioactive liquid and gaseous wastes have been released to the ground water and atmosphere at designated disposal sites under carefully controlled conditions designed to retain virtually all of the radioactive contaminants within the processing site. The low level aqueous wastes are routed to either above ground depressions (locally called "swamps") or underground disposal areas ("cribs") from which the solution drains into the ground. Swamps primarily receive normally uncontaminated process cooling water and in a few instances extremely low-risk process condensate. The minute quantities of radioisotopes included in these streams are assumed to move directly to the ground water; although some sorption and delay undoubtedly takes place, no reliance is placed on such a holdup. Cribs normally receive process condensates and process solutions of low activity (less than 5×10^{-5} microcuries per milliliter of fixed fission products). The soils beneath the cribs sorb and retain virtually all of the radioisotopes except ruthenium and tritium, more than 90 percent of the sorbed contaminants being held in the top 20-foot soil level beneath the discharge. When soil sorption cannot be relied upon to retain the radioisotopes of concern, "specific soil retention" cribs are used. In such cribs the volumetric discharge is limited and the ground "blotter effect" is used to hold the liquid in the soil column above the water table. Several thousand gallons of contaminated organic materials (kerosene, tributyl phosphate, lard oil), have been stored in the soil in this way. Gaseous wastes are treated to remove radioiodine, contaminated particles and noxious chemicals and are released to the atmosphere at elevations 50 to 200 feet above working areas. No attempt has been made to control the release of tritium or the noble gases, since their concentrations in the environment are currently below levels of concern. Contaminated solid wastes have been packaged in cardboard or wooden boxes and buried 10 to 20 feet beneath the ground surface in "burial gardens;" a small fraction of the more highly contaminated materials have been packaged in concrete boxes for burial or placed on old railroad cars and stored in tunnels adjacent to the Purex processing plant.

In February, 1967, Isochem Inc. was requested by the Richland Operations Office of the AEC to reevaluate the waste management program in view of

DECLASSIFIED

[redacted]

DECLASSIFIED

current needs and technologies and to recommend continuation or realignment of the program. The ground rules for the study as defined jointly by RL-AEC and Isochem Inc. were as follows:

1. Provide safe confinement of radioactive wastes for centuries.

2. Reduce the radioactivity discharged to the environment.

3. Apply licensing and restricted land use criteria.

4. Do not provide for fission product recovery.

5. Use program costs as a guide - not as an overriding factor.

6. Dispose of all Chemical Processing Division wastes currently stored and to be generated through 1980. Assume only the N and K Reactors operate after FY 1974.

7. Dispose of all Hanford-generated wastes that can be shipped to the 200 Areas.

The requested reevaluation was divided into two separate studies. The first of these studies is concerned with the various alternatives available for the treatment of high level and intermediate level liquid wastes which have been routinely stored in underground waste storage tanks. The results of that study have been included in ISO-981 (Reference 3). This report constitutes the second study which was completed by the Atlantic Richfield Hanford Company as the successor to Isochem's operating contract. It is concerned with all other wastes discharged to the environment. Basically, this report has been divided into six general topic areas which have been developed in detail in the six attached appendixes. These topic areas are:

Appendix A - Low Level Aqueous Waste Disposal and Treatment
Appendix B - Waste Organic Disposal and Treatment
Appendix C - Gaseous Waste Disposal and Treatment
Appendix D - Solid Waste Disposal and Treatment
Appendix E - Site Cleanup Studies
Appendix F - Potential Effects of Increased Ground Water Level

During the course of the study, it became necessary to make decisions concerning the breadth of scope of the study and the depth of treatment on the various alternatives explored. Major limitations and assumptions of the study include the following:

1. Present and future activities on the Washington State leased land were not considered in the report. Discharges to the environment on the 200 Area plateau do not include amounts discharged on the leased land. Similarly, costs of cleaning up the 200 Area site (Appendix E) make no allowance for clean up of the leased land.

2. Capital and operating cost estimates have been developed for many different schemes. With the limited engineering staff available

DECLASSIFIED

DECLASSIFIED [redacted]

for the study, it was possible to develop only "rough" estimates of sufficient reliability to permit comparison of alternatives and to permit a tentative selection of a program warranting more detailed study. The capital and operating cost estimates for the program increments should be firmed up by additional study before their use as a firm budgeting and engineering commitment basis.

3. Original ground rules for the study indicated that the chemical processing contractor should assume responsibility for storage of all Hanford-generated wastes which can be transported to the 200 Areas. In this study it has been assumed that this responsibility is limited to liquid and solid wastes generated in the future. Wastes already stored in the 100 and 300 Areas or other outlying non-200 Area plateau burial locations (for example, "Y" burial ground, P-10 Project) are considered outside the scope of this study.

4. Tritium removal from discharged wastes (for example, condensates) is not covered in the report. Tritium discharged presently is dispersed in the "ground water reservoir" beneath the site and decays to innocuous concentrations prior to reaching potable water supplies (Columbia River).

II. SUMMARY AND CONCLUSIONS

The character and magnitude of a program designed for pollution abatement on the 200 Area plateau is largely dependent on the criteria established for acceptability of program results. Estimated program costs range from a few million dollars to reduce the near-term potential for ground water contamination to a few billion dollars for site restoration for unrestricted use.

The restoration of the 200 Area plateau to a state permitting unrestricted use (except for areas containing process buildings) would involve the expenditure of about 4 billion dollars and would require several years to complete; some of the required operations would have a significant potential for the spread of contaminated particles to the environment. If the project were deferred until 1980, the estimated cost would rise to the range of 5 to 6 billion (1967) dollars, depending on the waste disposal practices used in the interim. The restoration program as currently visualized would include the transfer to some undesignated "safe" site, assumed to be 1500 miles distant, of 4.7 million cubic feet of contaminated wastes and 1.5 billion cubic feet of contaminated soil and incidental structures, containing about 500 kilograms of plutonium, 370,000 curies of mixed fission products and 94,000 curies of cesium-137 and strontium-90. These estimates do not include the high level salt wastes currently being immobilized in underground tanks; as indicated in ISO-981, about 500 million dollars would be required to transfer the contaminated salt cakes to the "safe" location. The contaminated process buildings were not included in either consideration.

If one's objectives were to reduce the concentration of plant effluents at point of discharge to levels specified by responsible governmental

DECLASSIFIED [redacted]

DECLASSIFIED [redacted]

agencies to be safe for unrestricted public access and to confine the potential contaminants in minimum volumes onsite, extensive modification of facilities and processes would be required. Programs for such control of the release of nitrogen oxides, organic materials and all radioisotopes except tritium and the noble gases would cost about 26 million dollars funded over a period of 3 years or more, plus an annual increased operating cost of about 6 million dollars. After completion of this program, the annual "release" of radioisotopes in aqueous low level wastes would be reduced from 8400 grams of plutonium and 16,000 curies of mixed fission products to less than 10 grams plutonium and 10 to 20 curies of mixed fission products. In making these estimates, it was assumed that radioisotopes would be present in any potentially contaminated stream at no less than detectable levels, although many of the streams would, in fact, be free of contamination.

While some of the withheld plutonium would be recovered and returned to process inventories by the above modifications, some plutonium and all of the fission products would be stored in buried concrete structures, either with incinerated waste in burial vaults or with immobilized salt wastes in underground tanks. Since these structures would have finite lives, they could not be relied upon for long-term confinement of radioactive materials. As developed in reference 2, however, their location on the Hanford plateau would be sufficiently isolated and stable that, with surface stabilization to protect against erosion by the elements and minimal site restriction and surveillance to protect against human encroachment, the safety of long-term confinement could be assured for the foreseeable future. Effectively, the increased capital and operating expenditures would increase the measurement reliability of plant effluents, decrease the rate of accumulation of radioisotopes and organic materials stored in the soil outside tanks, decrease the currently near-innocuous quantities of radioisotopes and noxious chemical entering the ground water and atmosphere, improve the locatability and retrievability of contaminated materials to be stored in the future, and decrease the cost of site restoration if and when effected. If, however, the basic safety of storing immobilized contaminated wastes in the Hanford plateau is accepted, an adequate degree of protection of the atmosphere and the ground water could be obtained at much lower cost.

The current step-wise program to provide specific protective devices to prevent the largest continuing and potential discharges of contaminants should be extended. With a capital expenditure of about 6 million dollars, and an additional annual operating expense of about one million dollars, the major potentials for contaminating the atmosphere and ground water could be eliminated (the first 20 items of Table I).

For that expenditure the amount of radioactivity discharged to the ground in aqueous streams would be reduced from the 1967 rate of 16,000 curies of fission products and 8400 grams of plutonium to annual rates of approximately 400 curies of mixed fission products and less than 10 grams of plutonium. These quantities would be small in comparison with the plutonium and fission products discharged to ground in buried solid wastes (approximately 17 kilograms of plutonium per year and 35,000 curies of mixed fission products). For an additional investment of

DECLASSIFIED [redacted]

DECLASSIFIED [redacted]

approximately $3,500,000 and an additional annual expenditure of approximately one million dollars, the radioactivity associated with solid wastes could be routed to either concrete burial vault storage (incinerator ash and decontaminated equipment) or to tank storage (solution from equipment decontamination). The above $3,500,000 includes costs for locating and marking burial sites according to the Wasington State grid system (Lambert coordinates). The basic technology is currently available to support all of the proposed programs, although design verification testing will be required in many instances. In some cases, development work will be warranted to reduce capital cost if time permits. The currently projected research and development budget is intended to support these activities.

In the absence of established criteria or safety hazard requiring a massive site restoration effort, a practical alternate would appear to be the declaration of the 200 Area plateau as a site requiring perpetual governmental ownership with minimal surveillance and restriction of access. Controlled industrial activities could continue with reasonable restriction. Some continuing limitations would be required on irrigation or other activities that would raise the water table beneath the site; while currently proposed irrigation activities could probably be allowed, additional study is required before a definitive answer can be given.

A continuation of the current step-wise program to reduce the quantities of contaminants entering the plant environment would appear to be prudent with priority items calling for the expenditure of 3 to 6 million dollars as soon as funding can be obtained. The timing and justification for the expenditure of additional funds is largely dependent on funding availability and policy decisions yet to be made.

III. LOW LEVEL AQUEOUS WASTE DISPOSAL AND TREATMENT

Since the beginning of the Hanford project, large volumes of low radioactivity level aqueous wastes have been discharged to the 200 Area "cribs" and "swamps" under carefully controlled conditions. As a result of these activities, a total of approximately 3 million beta curies (at time of discharge) of radioactivity have been discharged to the environment through 1966, as summarized in the table below:

	Cribs	Specific Soil Retention	Swamps and Ditches	Total
Total Volume, 10^9 gallon	6.3	0.034	98	104
Gross Beta Curies *	2 126 000	920 000	113 000	3 159 000
Strontium-90, curies	30 000	11 800	630	43 030
Cesium-137, curies	14 700	32 200	500	47 400
Plutonium, kilograms	197	4	9	210
Uranium, kilograms	59 000	51 000	6 000	116 000

* Curies originally discharged. Inventory in ground presently is significantly lower (about 10-fold) as a result of decay of short half-lived fission products such as zirconium and ruthenium.

DECLASSIFIED [redacted]

DECLASSIFIED [redacted]

A detailed breakdown of the amounts charged to individual swamps and cribs is indicated in Appendix A. The amounts discharged to cribs over the years have varied significantly. During the years 1954 to 1958, the highest rate of discharge to the environment was noted, reaching a peak discharge of approximately a megacurie of gross beta activity in 1956. During this period, some Bismuth phosphate process "aged" fission product wastes were discharged to the environment after treatment in the Uranium Recovery Plant ("scavenged") to remove essentially all of the long-lived cesium-137 and strontium-90. At the completion of the scavenging program in 1958, discharges of fission products to the environment were at low levels, averaging 30,000 beta curies per year for the period 1959 through 1963. In 1964, discharges to the environment increased to approximately 250,000 beta curies with modified Purex waste concentration techniques increasing the release of radioruthenium and coil failures contributing to the total.

In 1965, the Chemical Processing Department initiated a program designed to reduce the discharges of radioactivity to the environment. Efforts to date have been quite successful, with the following annual fission product discharge rates resulting in low level aqueous streams:

1964	250,000 beta curies
1965	141,000 beta curies
1966	101,000 beta curies
1967 (est.)	16,000 beta curies

In this study, methods of further reducing discharges to the environment have been explored. In Appendix A, two major schemes are developed.

Scheme I: Scheme I, in a sense already in progress, employs a systematic approach to reducing discharges to ground. Those streams which are the major contributors to environmental pollution can be attacked first with subsequent attention given to streams of lesser importance. Gradually, with a step-wise expenditure of money for new facilities, discharges to the environment would be reduced to very small quantities. Scheme I stresses reduction in the radioactivity discharged to the environment but does not necessarily result in discharges having radionuclide concentrations below drinking water limits.

Scheme II: Scheme II is developed on the premise that aqueous discharges to the environment at concentrations exceeding drinking water limits should be discontinued as soon as facilities can be provided. It would involve a major engineering and construction program.

Scheme I Summary

Since Scheme I employs a step-wise approach to reducing radioactive discharge to the environment, widely varying capital investment and operating costs can be developed depending upon the reduction factor one wishes to achieve. Costs for the individual plant and operating mode modifications required to implement the scheme are itemized in

DECLASSIFIED [redacted]

DECLASSIFIED [redacted]

Appendix A. In the table below pertinent radionuclide discharge data and cost data are presented for Scheme I if carried through to completion.

Overall Scheme I Summary Data

Capital Cost	$5,200,000
Annual Incremental Operating Cost	$1,200,000

Annual Radionuclide Discharge Rates

	1966	Estimated 1967	Predicted After Scheme I Completion
Beta curies	95 000	16 000	400 to 500
Sr-90 curies	521	160	4 to 6
Plutonium, grams	2 800	8 400	<10
Cs-137 curies	850	250	4 to 6

In addition to providing facilities for decreasing radioactive discharges, the $5,200,000 capital investment provides equipment and instrumentation designed to complete the monitoring of all radioactive or potentially radioactive streams discharging to the environment. In addition, facilities are provided to reduce the risk of sending large discharges to the environment due to process and/or equipment malfunction or failure. For example, normally "cold" B Plant cooling water would be automatically routed to tank storage for return to process evaporators if coil failure occurred.

The above table indicates that discharges to the environment are significantly reduced. However, some individual streams will still be above drinking water limits.

If one takes the total volume of aqueous wastes discharged to the environment and assumes the contained radionuclides are uniformly distributed in the wastes discharged, the following concentrations would result:

	Total Discharge Distributed in Cribbed Waste Only	Total Discharge Distributed in Total Aqueous Waste	Drinking Water Limits (MPCi-168 hr)
Gross beta, picocuries/l	16 800	1 000	100 to 30 000 *
Strontium-90, picocuries/l	250	15	3 000
Cesium-137, picocuries/l	250	15	200 000
Plutonium, picocuries/l	26	1.6	50 000

*Varies, depends upon specific nuclides involved.

[redacted]

DECLASSIFIED

DECLASSIFIED

[redacted]

With Scheme I provided, the annual discharge rates for long-lived radionuclides would be extremely small in comparison with the inventories already present in the ground as indicated below:

	Inventory in Ground			Annual Discharge Rate After Scheme I
	Previous Cribbing Activities	Leaks From Waste Storage Tanks	Total	
Cs-137, curies	47 000	90 000	137 000	4 to 6
Sr-90, curies	43 000	Negl	43 000	4 to 6
Pu, kilograms	210	Negl	210	<0.010

In fact, the annual low level aqueous discharge rates for cesium-137 and strontium-90 would be approximately 0.2 and 0.7 percent, respectively, of the annual decay rate of the in-ground isotope inventories accumulated from previous aqueous waste discharges.

Scheme I is interrelated with the ITS (in-tank solidification) program. Scheme I uses tanks freed up by the ITS program as collection receivers for diverted off-standard wastes and as pump tanks for transferring wastes from facility to facility. Consequently, close tank farm and ITS scheduling would be required to free-up required tanks in a sequence which will permit early adoption of Scheme I. Funding, design, and construction would require a minimum of two years for many Scheme I items. Consequently, required tankage should be available as required to achieve most the indicated Scheme I radioactive discharge reduction. As more tankage (and excess ITS boiloff capacity) becomes available, it would be possible to achieve some additional reduction in radionuclide discharge by diverting wastes of lower radionuclide concentrations to tankage.

Scheme II Summary

As has been previously indicated, Scheme II provides all the facilities required to reduce the radionuclide concentrations (except tritium) in all aqueous streams discharged to the environment. As developed in detail in Appendix A, these facilities would cost an estimated 22 million dollars capital investment and an incremental operating cost of 5 million dollars per year. Basically, the scheme would provide facilities for accomplishing the following:

1. Monitoring (or batch sampling) all streams discharged to assure they are below allowable discharge limits.

2. Diverting off-standard streams resulting from equipment failure or accidental mal-operation to retention basins or storage tankage provided to receive the stream while the offending plant is shutdown or the failure corrected.

3. Either returning the nonstandard liquid to the originating plant for retreatment or transferring it through the existing underground

DECLASSIFIED

[redacted]

DECLASSIFIED [redacted]

piping system to U Plant for treatment.

4. Treating various solutions at U Plant by boiling to produce condensates which can be directly discharged to the environment. The U Plant concentration facility would process a wide variety of solutions including: a) solutions from other Hanford contractors which cannot be directly discharged to the environment because of high radionuclide content or objectionable chemical content, b) solutions from the production facilities that require additional treatment, c) the nonstandard solutions collected in the retention system discussed above.

Comparison of Scheme I and Scheme II

Scheme I and Scheme II both have the overall objective of reducing the amount of radioactivity discharged to the environment. Scheme I, as additional remedial steps are added, gradually approaches the radionuclide discharge rates associated with Scheme II. With Scheme I in place, the annual discharge would be approximately 400 beta curies per year as compared with an estimated 5 to 10 beta curies per year discharge rate for Scheme II. Although both of these discharge rates are very low in comparison with present rates, the assurance that such low level discharges will be attained year after year is greater with Scheme II. This is due to the more comprehensive retention system included with Scheme II. Although annual discharges with Scheme I in place are higher than those of Scheme II, adoption of Scheme I would permit slightly quicker reduction in discharge rate. Some of the Scheme I steps could be adopted within a year or two to achieve a 70 percent reduction in discharge rate of fission products to approximately 5000 beta curies per year and essentially eliminate the plutonium discharge, while Scheme II activation would require approximately 4 years for achievement of its lower long-term discharge rates.

IV. WASTE ORGANIC DISPOSAL AND TREATMENT

Currently, waste organic from the solvent extraction plants is discharged to the environment in either of two ways. In some instances, discrete batches of "bad" organic are discharged to special "cribs" with discharge volume limited by the specific soil retention capacity of the soil. In other cases organic increments as separate phases are included in aqueous wastes discharged either to cribs (Z Plant) or to underground storage tanks (for example, in Purex organic wash solutions). Such organic wastes introduce their contained radionuclide directly to the environment or complicate subsequent cribbing or treatment operations. The amounts discharged from the solvent extraction plants are summarized below:

DECLASSIFIED [redacted]

[redacted]

DECLASSIFIED

	Total Discarded "Bad" Batches (Volume, Gallons)	Entrained or Discarded with Aqueous Volume (Gallons per Month)
Purex Plant	40 000 (10 000 curies)	3 000 to 6 000
B Plant (Estimated)	10 000 gal/yr	400 to 800
Z Plant Reclamation Facility	-	1 000

In Appendix B of this report, methods of reducing the discharge of organic to the ground have been presented. Basically, the preferred method involves the following basic approaches:

1. Provide modified plant facilities (for example, improved decanters) and treatment processes which would minimize the amount of organic discarded from the plants in the form of either "bad" batches or as entrained organic.

2. Provide some surge storage tankage at each plant specifically for the "bad" batches of organic which occasionally result and which do not respond favorably to normal plant organic treatment procedures.

   Organic collected in the surge tankage which cannot be returned to process would eventually be hauled by trailer to the incineration facility discussed later.

The capital and incremental costs required to provide and operate these organic handling facilities are summarized below:

		Capital Cost	Incremental Operating Cost
Purex:	Decanter System	$110 000	
	Surge System	165 000	
Z Plant:	Surge System	170 000	
B Plant:	Decanter System	130 000	
	Surge System	165 000	
Total		$740 000	$10 000/year

V. GASEOUS WASTE DISPOSAL

The review of the gaseous treatment systems and disposal practices of the Chemical Processing Department indicates that the plants are in generally good control and, for the most part, discharge systems limit personnel and environmental contamination at acceptably low levels. In Appendix C the discussion centers largely about the following limiting discharge situations encountered in the study:

[redacted]

DECLASSIFIED

[redacted]

DECLASSIFIED

1. Iodine-131 and krypton-85 discharge from the Purex stack.

2. Nitrogen dioxide (NO_2) discharges from the Purex stack, the UO_3 Plant stack and (probably) the 244-AR Vault stack.

Iodine-131 discharges from CPD stacks in 1967 have averaged 0.06 curies per week as compared with a control guide limit of 3 curies per week. The control limit is calculated from allowable occupational breathing concentration limits factoring in meteorological data to develop stack discharge limits. Although iodine is currently no problem based upon such limits, it could become a problem if land immediately adjacent to the 200 East Area were released for unrestricted use. At such a time the land could be used for grazing dairy cattle and a more restrictive discharge limit (based upon iodine-131 limit in milk) would be required.

Krypton-85 is not of concern at the fuel irradiation levels and processing rates considered in this study. Calculations indicate that concentrations 10-fold above the recommended "continuous breathing limit" can exist for short periods of adverse atmospheric dilution in locations near the Purex Plant. However, when integrated exposure to individuals is calculated, annual exposure resulting from krypton-85 is a small fraction of permitted annual limits. It should be noted, however, that krypton-85 may become a long-term problem of an international scale as ever larger amounts of krypton-85 are discharged to the atmosphere from the increasing processing of highly irradiated power reactor fuels.

Nitrogen dioxide is presently the "air pollutant" of primary concern within the Chemical Processing Division. Although definitive air sampling data are not available, the limited data which do exist tend to corroborate meteorological mathematical models which indicate potential problems with the NO_2 concentrations in the atmosphere in the vicinity of the Purex and UO_3 Plant stacks. As is indicated on Table I of Appendix C, calculations indicate that at one mile from the Purex stack NO_2 concentrations could infrequently reach as high as 100 ppm. Although such concentrations are experienced for short time intervals, they exceed the guides established by American Conference of Government Industrial Hygienists.

VI. DISPOSAL OF RADIOACTIVE SOLIDS

Since the beginning of the Hanford Project, approximately 4.5 million cubic feet of solid radioactive wastes have been buried in the 200 Area plateau in fifteen burial gardens totalling 130 acres. These wastes vary widely in composition from cardboard boxes of low radioactivity to "hot" failed stainless steel equipment. Estimates indicate that the buried wastes contained 350,000 beta curies of activity when buried (50,000 currently after allowing for decay), and 350 kilograms of plutonium. Recently, ARHCO has been directed by the AEC to store "dry" wastes from all Hanford contractors in the 200 Area burial gardens. With the volume of these wastes included, the rate of burying solid waste will increase to 360,000 cubic feet per year and the rate of land usage will increase from 6.5 to 12 acres per year. Assuming that

[redacted]

DECLASSIFIED

DECLASSIFIED [redacted]

burial practices remain unchanged, approximately 9 million cubic feet of solid waste will be buried by 1980 and 300 acres of land will have been "consumed" as burial grounds.

Studies, reported in detail in Appendix D, have been made to explore alternative methods of handling solid wastes. The purpose of these studies was to develop cost data for concepts aimed at achieving one or more of the following objectives: 1) reducing buried waste volume and land usage, 2) reducing radionuclide content of buried wastes, 3) improving waste retrievability and locatability, and 4) improving protection of the general public from such wastes.

Incineration and compaction have been studied as methods for reducing low level waste volume. Decontamination of failed equipment is developed as a method of reducing the amount of radionuclides discharged to ground. Burial of incinerator "ash" and decontaminated process equipment in large concrete burial vaults would improve retrievability and locatability.

Incineration of low level combustible waste (approximately 220,000 cubic feet per year) would reduce the volume of incinerable waste by a factor of about 20, reducing the total solid radioactive waste volume from 360,000 cubic feet to 145,000 cubic feet (60 percent) and land consumption from 12 acres to 5 acres per year. Decontamination of failed equipment would transfer 20,000 curies (80 to 90 percent) of fission products and 0.5 to 2 kilograms of plutonium from the burial gardens to tank storage.

The total cost of providing the dry waste facilities is $2,700,000 and the incremental operating cost associated with the facilities is $775,000 per year. These totals are developed as follows:

Facilities	Capital Cost	Annual Incremental Operating Cost
Incinerator	$ 950 000	$ 425 000
Decontamination Facilities	1 400 000	350 000
Burial Hoist Facility	80 000	No Increase
Concrete Burial Trench	-	200 000 *
Burial Garden Survey and Marking	325 000 **	No Increase
Total (Rounded)	$2 700 000	$ 975 000

* Required each year for concrete burial vaults to handle waste developed.

** A one-time expense cost. Not a normal capital cost.

VII. SITE CLEANUP CONSIDERATIONS

Over the years, as a result of the processing activities in the 200 Areas, portions of the area (for example, cribs, swamps, burial gardens, accidental spill areas, underground piping) have been contaminated with

DECLASSIFIED [redacted]

[redacted] DECLASSIFIED [redacted]

radionuclides and are no longer suitable for unrestricted use. In their present location these radionuclides do not constitute a hazard to the public and, barring an unforseen climate change, could be left undisturbed. However, as a part of the low level waste reevaluation program, studies have been made to determine the extent of "environmental involvement" and order-of-magnitude estimates have been made of the cost of digging up the contaminated areas and transporting them to a presently unknown "more optimum" burial site. (For study purposes the disposal site is assumed to be a salt mine in Kansas.) As summarized below, these studies indicate that approximately 4 billion dollars would be required to dig up contaminated areas accumulated since 1943.

Type of Contaminated Area	Millions of Cubic Yards Removed	Cost, Millions of 1967 Dollars		
		Excavation	Transportation	Total
Cribs	11	480	1 300	1 780
Swamps	31	140	500	640
Spill Areas	1	3	100	103
Burial Gardens	12	80	1 300	1 380
Underground Lines	0.04	2	5	7
Total (Rounded)	55	700	3 200	3 900

Studies were also made to determine the additional environmental involvement which would result from operation between 1967 and 1980. Studies were made assuming either: 1) treatment and disposal practices remain quite similar to those employed today (Basis I), or 2) total practices are modified to minimize future environmental involvement (Basis II). (For example, incinerator provided, cribbing reduced, concrete burial vaults provided.) As is indicated in the table below, incorporation of modified practices would cut "removal" costs in half, reducing costs for the 1967-1980 contamination removal from 2 billion to 1 billion dollars.

Additional Site Cleanup Costs
(Operation from 1967 to 1980)

	Millions of 1967 Dollars	
	Basis I Treatment and Disposal Practices Essentially Unchanged	Basis II Facilities Provided To Reduce Environmental Contamination
Cribs	7	4
Swamps	0	0
Spills	58	58
Burial Gardens	1 870	945
Hot Waste Lines	3	3
Total (Rounded)	2 000	1 000

DECLASSIFIED [redacted]

[redacted]

DECLASSIFIED

The above estimates do not include costs for removing the high and intermediate level salt wastes from tanks or costs for dismantling the separations plants and contaminated plant auxiliaries. Costs of removing tanked wastes have been previously developed in ISO-981 (Reference 3).

In developing the preceding figures it was assumed that contaminated areas would be excavated such that the remaining contamination would constitute only "nuisance contamination" if people were to dig in the excavated areas. If alternative assumptions were made, site restoration costs would be significantly reduced. For example, if 90 percent removal of plutonium and fission product ground inventories was the goal rather than the more complete removal of the previous study case, the 4 billion dollar estimate could be cut essentially in half. Similarly, excavation and removal of major plutonium and fission product inventories within 30 feet of the ground surface could be accomplished for roughly 2 billion dollars.

Order of magnitude estimates have also been made of the cost of digging large caverns in the basalt beneath the project area and burying the excavated soil and materials in the cavern rather than transporting to a 1500 mile distant disposal area. These estimates indicate digging a 55 million cubic yard cavern at depth in the basalt would cost 1.5 to 2 billion dollars and the overall cost would be comparable to the 4 billion dollars required for excavating the wastes and transporting them to a 1500 mile distance site.

VIII. EFFECTS OF INCREASED WATER TABLE ELEVATIONS

Consideration is occasionally given to conducting activities in the Hanford general area (for example, land irrigation, Ben Franklin Dam construction) which would result in raising the level of the ground water beneath the 200 Areas. Such increases in ground water level would disturb the present ground water flow patterns and would inundate contaminated soil areas (for example, lower portions of crib sites). As a part of the low level waste reevaluation study (Appendix F), studies were made to determine the effects an increased water table would have on radionuclide inventories in the ground.

Initial efforts were expended in determining radionuclide distribution in the soil from the present water table to elevations 100 feet above the present level. As is indicated in detail in Appendix F, the amounts of long-lived radionuclides in the soil layer is quite low. Drilling at inactivated sites and well logging studies have shown that long-lived radionuclides such as cesium-137, strontium-90 and plutonium are held up almost quantitatively (more than 99 percent) in the upper 30 feet of a crib disposal site. The studies indicated that approximately 60 curies of cesium-137, 70 curies of cobalt-60 and 130 curies of strontium-90 are present in the 100-foot ground layer above the present water table.

The second phase of this study was concerned with predicting water table increases and changes in flow patterns for an assumed irrigation

[redacted]

DECLASSIFIED

[redacted] DECLASSIFIED [redacted]

study case. For the assumed study case (55-square miles irrigated, Ben Franklin Dam reservoir at 400-foot level, no discharge of reactor water inland -- see Appendix F for details) increases of 80 feet and 40 feet in water table under the 200 West and 200 East Areas, respectively, were predicted. The study also indicated the direction of main ground water flow would be changed from the currently predominant southeast pattern to a northeasterly pattern. Ground water travel time to the river for the new flow pattern is predicted to be approximately the same (about 12 years) as the present main flow pattern. However, a possibility exists that a fraction of the flow could get to the river in as little as 2 years.

Since the long-lived fission product inventory in the 100-foot soil layer above the water table is low and since the rate at which the inventory would be inundated and leached would be slow (at least 5 years), cesium, strontium and cobalt concentrations in the river would be several orders-of-magnitude below drinking water limits, even if one assumes no reabsorption as the long-lived radionuclide travels toward the river.

The major impact of increasing the ground water level 80 feet would be associated with the leaks from "high" level waste tanks. Presently, some tank bottoms are 150 feet from the water table and leaks have penetrated as far as 20 feet beneath the tanks. If the water table raised 80 feet it would be 70 feet from the tank bottom and only 50 feet from highly contamined "leak" areas.

IX. ACTION PLAN

In the preceding discussions various ways of reducing environmental involvement in the 200 Areas have been presented. The associated costs are somewhat related to the reduction in involvement achieved. For example, for an estimated capital expenditure of $5,200,000 for Scheme I low level aqueous facilities, annual aqueous radioactive discharges to the cribs and swamps would be reduced from the present 16,000 beta curies and 10 kilograms of plutonium rate to a 400 beta curies and less than 0.010 kilograms of plutonium rate. With the appreciably larger expenditure of 22 million dollars (Scheme II) further reductions to 10 beta curies and less than 0.01 kilograms of plutonium per year could be achieved. Although the ultimate decision on the facilities to be provided rests with the AEC, Atlantic Richfield Hanford Company has developed the following action plan for AEC review and consideration. This action plan has been developed after consideration of the following interrelated factors:

1. The capital and operating costs of the alternatives and the reduction in environmental involvement likely to be achieved.

2. National desire to reduce "pollution."

3. Comparing the environmental involvement after incorporating modifications with the overall environmental involvement resulting from operations to date.

DECLASSIFIED [redacted]

DECLASSIFIED [redacted]

4. Short-term and long-term safety.

5. Availability of funds.

Overall, the action plan involves a step-wise program which would be gradually put in place over a 3-year period. In total it would involve a capital expenditure of approximately 9 million dollars and increased annual operating costs of approximately 2 million dollars. Major items contributing to the 9 million dollar program are as itemized below:

	Capital Cost	Annual Incremental Operating Cost
Scheme I -- Low Level Aqueous Waste	$5,200,000	$1,200,000
Organic Waste Facilities	740,000	~ 10,000
Gaseous Waste Facilities	540,000	Credit 46,000
Solid Waste Facilities:		
Incinerator	1,000,000	430,000
Equipment Decontamination Facilities	1,400,000	350,000
Concrete Burial Vaults	200,000*	
Surveying and Marking		(325,000)**
TOTAL	$9,080,000	$1,944,000
Plus	200,000 per year	325,000 once
TOTAL (rounded)	$9,000,000	$2,000,000

* Not a normal operating cost, rather a recurring capital expense.

** A one time expense item.

In the above table, $540,000 is indicated for gaseous waste treatment facilities. This figure assumes that the NO_2 environmental monitoring program presently under way will confirm that the predicted NO_2 treatment equipment is required to meet specified NO_2 breathing limits.

Although the total program is outlined for early action, funding limitations may dictate delay or elimination of portions of the overall program. Consequently, a priority listing has been developed for the various items contributing to the $9,000,000 total program and is attached as table 1.

DECLASSIFIED [redacted]

[redacted] DECLASSIFIED [redacted]

As has been previously indicated, irrigation of large areas in the vicinity of the Hanford plants can produce large increases in ground water levels (as much as 80 feet for the case studied), and the "dry ground distance" beneath high level waste tanks could be reduced approximately 50 percent to 70 feet. This would reduce the margin of safety for high level waste tank leakage. Therefore, it is recommended that extensive irrigation in the Hanford area be approached cautiously. If land is released for irrigation, it should be done in increments, and only after careful assessment of the overall ground water situation. Irrigation should not be permitted in an unrestricted or irreversible manner. Should predicted water table increases be exceeded, it should be possible to discontinue irrigation.

X. RESEARCH AND DEVELOPMENT

The research and development programs conducted in recent years have provided the technical base required for moving immediately into the design and construction of facilities for pollution abatement. The proposed low level aqueous treatment schemes rely largely on ion exchange, solution recycling, and solution evaporation as treatment methods.

Some proof testing would be required to demonstrate that ion exchange technology is applicable to the specific streams to be treated. Ion exchange technology is already being tested on a plant prototype scale (ITS #1 condensate), with positive results to date. Effects of recycling streams within the Purex Plant are already being studied in the laboratories, and the first stage of plant testing is contemplated soon. Where evaporation processing is employed, review of the stream composition involved indicates striking similarity with streams previously successfully evaporated and de-entrained.

The main organic treatment scheme presented in the study employs decanting to reduce organic discharge, storage of "bad" batches of organic, and incineration of the "bad" solvent as a method of final disposal. Development and demonstration would be required to provide decanters suitable for plant use. Corrosion testing would be required to determine the corrosion resistance of storage tanks considered for storing CCl_4 from 234-5 Building operations. Organic incineration studies would be conducted as a part of the solids incineration development program discussed below.

For the solid waste treatment systems, the main research and development effort would be associated with development of an adequate off-gas treatment chain for the incinerator off-gases. Although off-gas treatment work has been performed in many locations, and incinerators are in use by the French and others, prototype testing would probably prove desirable to minimize start-up problems and assure total system adequacy during initial operations. Research and development would be required to identify corrosion-resistant materials for use in the off-gas train.

DECLASSIFIED [redacted]

[redacted] DECLASSIFIED [redacted]

Some instrument development work would be required to develop instruments of improved sensitivity for monitoring NO_2 and the low radioactivity levels present in effluent streams. Work would also be required to develop an instrument system capable of measuring the radionuclide content of solid wastes discharged or buried.

In addition to the above items which would receive major emphasis, some efforts would be directed toward the development of attractive alternatives to currently identified solutions to specific problem areas. The alternatives would be implemented if evaluation shows they are sufficiently attractive (e.g., significantly reduced capital or operating costs, more effective stream clean-up), provided the required research and development can be completed in time to permit adoption.

In recent budget planning, the following research and development funds have been requested for low level waste activities:

Fiscal Year 1968	$225,000
Fiscal Year 1969	$375,000
Fiscal Year 1970	$400,000

This expenditure pattern assumes that the bulk of capital funds will not be provided before fiscal year 1970. It is expected that the above listed research and development items associated with "proving out" the recommended action plan could be incorporated within the above funding. Reorientation of efforts and changes in program emphasis may be required to match the construction schedule that is finally adopted.

XI. HAZARDS

The schemes considered for adoption do not contain any major hazards that have not been previously encountered in Hanford operations. Ion exchange and evaporation have been routinely employed on "hotter" streams than those to be treated. Incineration of combustible wastes containing fission products in addition to plutonium would be a new operation for Chemical Processing Division. However, most of the hazards have been faced in the operation of the 234-5 Building plutonium incinerator and its associated off-gas train. As individual processing additions are made, hazards reviews would be made to assure operational safety.

By reducing the amount of activity discharged directly to ground, and by routing increased amounts of fission products and plutonium to storage (e.g., tanks or concrete burial vaults), environmental involvement resulting from future activities would be reduced.

XII. REFERENCES

1. RL-SEP-894, "Waste Management Program — Chemical Processing Department," S. J. Beard, et al, December 28, 1965. (Unclassified)

2. BNWL-642, "Long-Term Hazard Analysis for In-Tank Solidification Radioactive Waste Storage Concept," Carl M. Unruh, November, 1967.

DECLASSIFIED [redacted]

[redacted] DECLASSIFIED [redacted]

3. ISO-981, "Hanford High Level Waste Management Revaluation Study," compiled by P. W. Smith and R. E. Tomlinson, August 31, 1967. (Secret)

4. ISO-856, "Chemical Processing Division Plant and Capital Equipment Budget for FY-1969," L. W. Finch, May 17, 1967. (Unclassified)

DECLASSIFIED [redacted]

[redacted]

DECLASSIFIED

TABLE I

ARHCO TENTATIVE PRIORITY LISTING

LOW LEVEL WASTE MANAGEMENT REEVALUATION STUDY ITEMS

	Item (Expected Results)	Capital Cost (See Note 1)	Incremental Operating Cost (See Note 1)
1.	Route all ARHCO Special Services waste, BNW waste, DUN waste to Redox for concentration. (Reduce discharge to ground 2700 curies per year.)	$ None	$ 173 000
2.	Z Plant high salt wastes routed to storage instead of Z-1A tile field. (Reduce plutonium discharge to cribs approximately 7000 grams per year.)	540 000(5)	83 000
3.	Z Plant organic surge tank. (Reduces tank complications if Z Plant high salt waste is routed to storage.) (See Note 3.)	170 000	Negligible
4.	Diversion of B Plant cooling water and steam condensate to tank if high in activity. (Eliminate risk of a large discharge to ground.)	125 000	Low. Depends upon frequency of diversion.
5.	Diversion of 241-AR Vault cooling water to tank. (Essentially eliminate risk of a large radioactive discharge to swamps.)	145 000	Low. Depends upo frequency of diversion.
6.	Purex steam condensate. Divert small portion of stream to tank for later boiloff.	160 000	63 000
7.	Monitoring and alarm equipment on Purex cooling water. (Permits fast focusing on problem before it becomes a serious swamp problem.)	35 000	3 000
8.	Z Plant process condensate routed to tankage instead of Z-12 crib. (Reduce plutonium discharge to ground approximately 1200 grams per year.)	190 000(5)	67 000
9.	Purex ammonia scrubber waste to Redox for concentration (see note 4). (Reduce radioactivity discharged to ground approximately 6000 curies per year.)	435 000	99 000
10.	Facilities for recycling Purex process condensates in Purex. (Reduce curies cribbed approximately 2200 per year.)	$ 440 000	$ 155 000

DECLASSIFIED [redacted]

[redacted]

[redacted]

DECLASSIFIED

TABLE I
ARHCO TENTATIVE PRIORITY LISTING

	Item (Expected Results)	Capital Cost	Incremental Operating Cost
11.	Provide facilities for treatment of 241-A and AX tank farm condensate, B Plant process condensate and ITS No. 2 condensate. (Reduce discharge of cesium and strontium 75 curies per year.) (See Note 2.)	$ 2 500 000	$ 435 000
12.	Segregate Purex lab waste and send curies fraction to concentration facilities in Purex. (Reduce curie discharge 150 curies per year.)	16 000	18 000
13.	B Plant decanter (Reduce organic going to high level waste tanks.)	110 000	Negligible
14.	B Plant organic surge tank. (Provide room for storing "bad" organic and eliminate ground discharge.) (See Note 3.)	165 000	Negligible
15.	Purex decanter. (Reduce organic going to high level waste tanks.)	110 000	Negligible
16.	Purex organic surge tank. (Provide room for storing "bad" organic and eliminate ground disposal.) (See Note 3.)	165 000	Negligible
17.	Ion exchange facilities for 242-T process condensate. (Reduce cesium-137 discharge to ground approximately 4 curies per year.)	242 000	48 000
18.	Purex NO_2 treatment, 293-A system and sugar denitration system. (Reduce NO_2 out Purex stack.)	455 000	Credit 46 000
19.	UO_3 Plant stack modifications. (Eliminate NO_2 problem.)	35 000	-
20.	244-AR stack replacement. (Eliminate NO_2 problem.)	30 000	-
21.	Provide equipment decontamination facilities at T Plant and tank farm. (Remove 8000 curies per year from equipment buried.)	880 000	225 000
22.	Incinerator. (Reduce ground consumption from 12 acres to 5 acres per year; make waste more compact and of low enough volume to permit concrete vault storage at "reasonable cost;" provide organic burning.) (See Note 3.)	$ 1 000 000(5)	$ 430 000

DECLASSIFIED [redacted]

[redacted]

[redacted]

TABLE I

ARHCO TENTATIVE PRIORITY LISTING

DECLASSIFIED

Item (Expected Results)		Capital Cost	Incremental Operating Cost
23. Plutonium decontamination facilities. (Eliminate burial of 2000 grams plutonium per year.)		$ 480 000	$ 125 000
24. Provide monitoring measurement capability and in some cases volume holdup on low potential discharge streams		325 000	60 000
a) 234-5 and 231-Z Ditch	$120 000		
b) 224-U Swamp discharge	35 000		
c) Purex chemical	35 000		
d) Improved stack monitors	20 000		
e) Purex crane maintenance facility waste	44 000		
f) Radiation probes on Purex French drains	16 000		
g) Purex 203-A French drains	55 000		
25. Provide diversion capability on 231-Z hood sink and floor drain waste. (Eliminate ten grams plutonium per year to cribs.)		95 000	15 000
26. Surveying site (Lambert coordinates) and marking sites (Improved locatability.)		325 000	-
27. Concrete burial vault for storage of buried waste - costs assume incinerator facility is provided.			200 000/yr (a recurring capital expense)
TOTAL		$9 173 000	$1 766 000

NOTES:

1. The costs in the above table have been developed on the assumption that each problem area would be resolved individually. They represent initial study costs of sufficient reliability to be used as discussion bases. Once ARHCO-RL-AEC agreement has been reached on the overall approach to the pollution abatement problem, additional study would be required to determine possible ways of consolidating items to produce an optimum "design basis system."

2. Costs for Item 11 have been developed using ion exchange treatement for each of the itemized streams. Alternative approaches (i.e., a consolidated facility) might prove more attractive and less costly (perhaps cost reduced from $2,500,000 to $2,000,000).

DECLASSIFIED

[redacted]

[redacted] DECLASSIFIED [redacted]

TABLE I

ARHCO TENTATIVE PRIORITY LISTING

3. Final disposition of "bad" organic collected in the various surge tanks is assumed through the incinerator provided as item 22. If that incinerator were not provided an incinerator specifically for organic would be required at a cost of $100,000 to $200,000.

4. To minimize capital investment requirements Redox evaporation is assumed for various streams. If Redox were not available, alternative evaporation capacity could be provided to handle the streams (e.g., additional ITS units at a cost of roughly $2,000,000).

5. These items have been included as separate items in Isochem's FY 1969 Plant and Equipment Budget (Reference 4) under Program 39-02, Waste Management Flexibility. In that document, item entitled "Miscellaneous Waste Management Facilities" was included at an estimated cost of $1,100,000. That sum could cover numerous facilities on the above listing.

DECLASSIFIED [redacted]

APPENDIX A

LOW ACTIVITY LEVEL AQUEOUS WASTES

Prepared by: G. L. Hanson
J. R. LaRiviere
H. L. Caudill
J. W. Fillmore
R. L. Walser

TABLE OF CONTENTS

		Page
I.	INTRODUCTION	A. 1
II.	DESCRIPTION OF PAST EXPERIENCE AND PRESENT STATUS	A. 2
III.	SCHEME I -- REDUCTION OF RADIOACTIVE DISCHARGE IN AQUEOUS WASTE	A. 3
	A. Purpose and Scheme I Definition	A. 3
	B. Limitations and Assumed Conditions	A. 4
	C. Proposed Treatment — Individual Waste Streams	A. 4
	1. Ammonia Scrubber Wastes - Purex Plant	A. 4
	2. Battelle Northwest Laboratory, Douglas United Nuclear, and Atlantic Richfield Hanford Company Special Services Wastes	A. 7
	3. Process Condensate — Purex Plant	A. 9
	4. Steam Condensate -- Purex Plant	A.12
	5. Laboratory and Miscellaneous Wastes -- Purex Plant	A.13
	6. 241-A and AX Tank Farm Condensate	A.15
	7. Process and Steam Condensates — B Plant	A.19
	8. Steam and Process Condensates — 242-T Building	A.22
	9. Process Condensate -- In-Tank Solidification Unit No. 2	A.25
	10. Cooling Water Disposal -- Purex Plant	A.28
	11. Acid Fractionator Process Condensate - Purex Plant	A.30

		Page
III. C. 12.	Cooling Water and Steam Condensate — B Plant	A.31
13.	Chemical Server -- Purex Plant	A.32
14.	Cooling Water and Steam Condensates -- 241-AR Vault	A.33
15.	Crane Mainteance Facility Waste — Purex Plant	A.35
16.	French Drains -- Purex Plant	A.36
17.	French Drains -- 203-A Facility — Purex Plant	A.37
18.	Laboratory Wastes -- 222-S Laboratory	A.38
19.	Cooling Water Disposal — U Plant	A.39
20.	Plutonium Reclamation Salt Wastes -- 236-Z and 242-Z Facilities	A.40
21.	Waste Waters -- 234-5 Building	A.42
22.	Cooling Waters -- 231-Z and 234-5 Buildings	A.43
23.	Hood, Sink, and Floor Drain Waste Water -- 231-Z Building	A.45
D.	Alternative Concentration Methods	A.46
E.	Scheme I Summary	A.47
F.	Scheme I Hazards	A.47
G.	Scheme I Research and Development	A.48
IV.	SCHEME II -- SCHEME FOR REDUCING RADIOACTIVE CONCENTRATIONS OF LOW LEVEL AQUEOUS DISCHARGES TO LESS THAN DRINKING WATER LIMITS	A.49
A.	Introduction -- Scheme II	A.49
B.	Discussion — Scheme II	A.50
1.	Facilities	A.50
2.	Costs and Expenditure Pattern	A.53
C.	Scheme II Hazards	A.54
D.	Scheme II Research and Development	A.54

	Page
V. REFERENCES	A.54
TABLES	A.56
FIGURES	A.88

APPENDIX A

LOW ACTIVITY LEVEL AQUEOUS WASTES

I. INTRODUCTION

Disposal of low and intermediate level radioactive liquid wastes to the ground has provided safe and economic disposal of large volumes of such wastes since the beginning of operations at Hanford. Over 100 billion gallons of liquid wastes containing approximately 3 million curies of total beta emitters have been disposed to the ground through 1967. Information regarding the types of wastes discharged, the volume discharged, the total activity discharged to sites is presented in several tables of Appendix A. Such information permits identification of waste disposal problem areas and provides a basis for the planned programs for reduction of radioactivity in the waste stream being discharged. Two basic schemes for reduction of radioactivity in the waste streams discharged are presented in Appendix A.

Scheme I would provide treatment of those liquid waste streams which contribute significantly to the current total radioactivity discharged (1967 estimated at 16,000 curies total beta emitters). Various treatment methods are used for the involved streams. Treatment methods include 1) decontamination by evaporation, 2) ion exchange for removal of long-lived radioisotopes (for example, cesium-137 and strontium-90) from selected waste streams, and 3) recycling of waste streams. In addition, facilities are provided on some streams to 1) improve radiation monitoring of the streams being discharged, and 2) divert, collect, and retain some streams for subsequent treatment. Reduction of radioactivity in the streams discharged to ground to MPC_w would not be achieved on all streams. Following installation and successful operation of all of the proposed facilities and treatments, the annual radioactive discharge to the ground would be reduced to approximately 400 curies of total beta emitters. Reduction of radioactivity discharges to the ground would proceed on an orderly basis. Those streams contributing the most radioactivity to the ground would be the first treated.

Scheme II would provide collection, retention and decontamination of all waste streams currently above MPC_w. Large volume streams, such as cooling waters and steam condensates would be monitored and diverted for retention and decontamination whenever radioactivity above MPC_w was detected. Decontamination of the waste streams by evaporation and condensation is assumed. Facilities for implementation of Scheme II would proceed on an expedited basis to reduce the total volume of liquid waste discharged to the environs to MPC_w, or less, as soon as possible.

Neither Scheme I nor Scheme II would provide MPC_w for tritium.

II. DESCRIPTION OF PAST EXPERIENCE AND PRESENT STATUS

Waste disposal practices followed by the duPont Company, the General Electric Company, Isochem Inc., and most recently by the Atlantic Richfield Hanford Company have all utilized the favorable climatic and soil characteristics of the site for disposal of low (5×10^{-5} microcuries mixed fission products per milliliter) and intermediate (5×10^{-5} - 100 microcuries mixed fission products per milliliter) level radioactive liquid wastes. These wastes, consisting of process condensates, steam condensates, process cooling waters, and other miscellaneous wastes, resulting from operation of the separations plants and associated facilities, have been discharged to the ground in specific retention trenches, drains, drywells, sumps, underground cribs, ditches, and surface ponds or swamps on the 200 Area plateau since 1945.

Low level radioactive liquid wastes, consisting mainly of process cooling waters from low risk service, are routinely discharged to above ground ditches and process swamps. Routine sampling and analysis of the streams discharged is used to determine the radioactivity input to the site. Radiation surveys of the swamp shoreline and sampling and analyses of ground water samples from wells in the vicinity assures site control. When an above ground disposal site is taken out of service, it is back-filled to prevent the spread of contamination by wind.

Intermediate level radioactive liquid wastes, consisting of process cooling waters from high risk service areas, process and steam condensates, and other miscellaneous wastes are discharged to underground cribs. Sampling and analysis of the streams discharged is used to determine radioactivity input to these sites. The ion exchange capability of the underlying soil column is used to remove and retain long-lived fission products discharged to the site. Sampling and analysis of ground waters from wells in the vicinity of each such disposal site monitor the performance of the site. Cribs are abandoned when the percolation rate decreases to the point that the normal flow cannot be handled or when long-lived fission products, such as cesium-137 or strontium-90, approach 0.1 MPC_w (0.1 drinking water permissible concentrations) in the ground water samples. Sampling and analysis of the ground waters from monitoring wells continue to indicate that this is a safe method of waste disposal.

Intermediate level radioactive liquid wastes are also discharged to below ground sites which are operated on a "specific retention basis." The volume of waste discharged is limited to approximately 15 percent of the soil column volume between the site and ground water. All organic wastes are disposed to specific retention sites (see Appendix B).

The volume and type of liquid waste disposed to all sites through 1966, including curies of strontium-90, cesium-137 and total beta emitters, is summarized in Table I. Table II summarizes the radioactive wastes discharged to each of the surface swamps and ditches. Table III and IV summarize radioactive wastes discharged to each of the below ground cribs and specific retention sites during the same period. The volume and amount

of radioactivity discharged each year is presented in Table V.

It should be noted that a significant portion of the increased radioactivity discharged during the period 1953 through 1958 was contributed by cribbing of Redox cell drainage wastes and process condensate. At startup in 1952, Redox process condensates received double evaporation. When the second stage evaporator coil failed on November 16, 1952, it was not replaced and the radioactivity of Redox process condensate increased significantly. Additional radioactivity was discharged to the ground in scavenged wastes during 1954 through 1958. Salt wastes were chemically scavenged to precipitate cesium and strontium and the waste supernatants discharged to specific retention trenches. First cycle bismuth phosphate plant process wastes were also scavenged and the supernatant discharged to the ground. This planned scavenging program was used to provide tank storage for other more radioactive salt wastes. The major portion of the total radioactivity discharged to cribs in 1964 was in a small volume discharge of organic waste which contained 95,000 curies of ruthenium-106. Failure of a cooling coil in 1964 also resulted in the discharge of 96,000 curies of mixed fission product activity to the Gable Mountain swamp.

The major activity discharged to ground in 1965 and 1966 was present in ammonia scrubber waste from the first multipurpose annular Purex dissolver. Modifications made on the second and third dissolvers greatly reduced the radioactivity in this waste stream; however, this stream still contributes significantly to the total radioactive discharge to the environs. Discharges to each site and the source of the waste streams during 1965 and 1966 and the expected discharges during 1967 are presented in Table VI, VII, and VIII, respectively.

III. SCHEME I - REDUCTION OF RADIOACTIVE DISCHARGE IN AQUEOUS WASTE

A. Purpose and Scheme I Definition

In February, 1967, the Richland Operations Office of the Atomic Energy Commission requested that the Waste Management Program be reevaluated and that 1) licensing and restricted land use criteria, as it is expected to be applied to Nuclear Chemical Separations Plants, be considered, and 2) radioactive material discharged to the environment be reduced to the lowest practical minimum, MPC_W for liquid waste discharges if possible. It was also requested that a preferred method for this radioactivity reduction be determined. It is the purpose of Scheme I to present a program for an orderly reduction of radioactivity discharged in the aqueous waste streams.

Treatment methods were investigated for removal of radioactivity from each low and intermediate level waste stream discharged to the environment on the 200 Area plateau. These waste include wastes generated by the ARHCO separation plant and associated facilities and wastes of Battelle, ITT and DUN which are discharged in ARHCO controlled areas. The preferred treatment method was selected for each of these streams.

These methods include evaporation and ion exchange treatment for reduction of activity in the discharged streams and recycle of condensate streams for reuse in the process. In some instances improved monitoring is recommended to permit early detection and correction of the problem generating abnormal stream activity. Also, for some streams improved sampling, analysis, and volume measurement capability is recommended to provide more reliable data on volume and activity of the waste streams discharged. Those streams contributing the largest total activity to the environs would be treated initially with emphasis eventually shifted to treatment of streams of lesser activity. Proposed treatment methods for each of the individual streams, together with activity reductions expected and cost data, are discussed in Section C below.

B. Limitations and Assumed Conditions

1. It is assumed that the Semiworks would not operate.

2. It is assumed that the Redox Plant would be available for evaporation of intermediate level wastes. (Two Redox concentrators are presently being used for this service.)

3. Treatment to reduce the amount of tritium discharged in the various waste streams is not considered in the study.

C. Proposed Treatment - Individual Waste Streams

1. NH_3 Scrubber Wastes - Purex Plant

Ammonia scrubber wastes resulting from operation of the Purex pot type dissolvers contributed approximately 500 curies per year of spectrum activity (fission products in ratios present in fuel elements processed in separations facilities) to the ground prior to 1965. Replacement of the A cell pot type dissolver with the first annular multipurpose dissolver, in September, 1965, resulted in a dramatic increase in radioactivity in the scrubber waste stream (80,000 curies in October, 1965). Revised operating procedures and modifications to the ammonia scrubber piping on the A cell dissolver, design modifications of the offgas train on the B cell dissolver, installed in February, 1966, and additional modifications to the C cell dissolver, installed in September, 1966, have been effective in reducing the radioactivity content of this stream. However, an estimated 6000 curies of total beta radioactivity will probably be discharged to ground in 1967. Replacement of the A dissolver tower with a unit modified to approximate the flow pattern of the C cell equipment was completed in October, 1967, at a cost of $50,000. This equipment change may decrease the radioactivity in the ammonia scrubber effluent by a factor of 2 to 3 (6000 to 3000 curies per year) assuming equal use of the three dissolvers. Additional proposed equipment changes

(that is, replacement of the A dissolver and replacement of the B dissolver tower) would possibly reduce the radioactivity by another factor of 2. However, the additional load of Zircaloy clad fuel may produce a negative effect and increase the radioactivity in this stream so that the total radioactivity discharged would remain approximately 3000 beta curies per year. Further reduction of radioactivity discharged to ground in this stream would be accomplished by routing to the Redox Plant for decontamination by evaporation. The volume of ammonia scrubber waste to be treated is about 3.2×10^6 gallons per year.

a. Facilities Description

1) General

The ammonia scrubber waste solution would be routed to Redox for evaporation prior to disposal. Facilities at Redox would be unchanged. Existing transfer lines between 200-East and 200-West Areas would be used. New transfer routings between Purex and C Tank Farm, and between U Plant and U Tank Farm would be installed to complete the transfer routing between Purex and Redox.

2) Routing from 202-A Building to 202-S Building (Purex to Redox)

Currently, this waste stream is routed to the 216-A-36B crib. As shown on Figure 1 (Drawing SK-2-21811) it would be diverted to the C Tank Farm. Approximately 4000 feet of 4-inch line would be installed in a new encasement along with a second line for Purex process condensate diversion (see Section III-C.3).

The existing crib line to the 216-A-36B crib south of the 202-A Building would be blanked off and the crib abandoned. The new line would commence at that point and would be routed west of the 202-A Building to the C Tank Farm. A new diversion box would be provided in C Tank Farm for the two lines. Empty waste tanks in C Tank Farm would be made available for solution storage. Two encased lines from this diversion box would be installed to the two empty tanks. The ammonia scrubber waste solution would be transferred to 200-West Area via the existing East-West transfer system. As shown on Figure 2 (Drawing SK-2-21820) a new three-line encasement would be installed between the 241-UX-154 diversion box and the 241-U-152 diversion box.

The ammonia scrubber waste solution would be collected in an empty U Farm Tank, made available through the implementation of the in-tank solidification program, and pumped directly from U Farm to TK-D-13 in Redox through existing routings.

3) Redox Plant, 202-S Building

Low level wastes are currently being processed in Redox. It is proposed that the existing equipment be utilized to process the Purex ammonia scrubber waste solution. The waste would be pumped from U Farm to the D-13 waste receiver, then to concentrators D-12 and D-14, which have a combined boil-off capacity of 20 - 25 gpm. The D-11 condenser services both evaporators. Condensate from D-11 condenser would be routed to TK-D2, sampled, and then jetted to crib 216-S9 for disposal. The concentrator bottoms would be routed to underground storage.

Other wastes would also be processed in Redox, such as: Pacific Northwest Laboratory wastes, Douglas United Nuclear and T Plant Special Services wastes.

4) Redox Additions

As shown on figure 3 (drawing SK-2-21812), detail II, and figure 2 (drawing SK-2-21820), two new proportional sample stations would be installed at Redox. One would be installed in the steam condensate line discharging to the 216-S-5 and 216-S-6 cribs, and one would be installed in the cooling water disposal line to the swamp. Each of these would be equipped with flow integrators, radiation monitors, and alarms.

b. Results Expected

Evaporation of this waste stream in the existing Redox facilities should provide a decontamination factor of 100. The radioactivity discharged to the ground in the condensate stream from ammonia scrubber waste concentration is expected to total 30 to 60 curies/year.

c. Capital Cost

Installation	$270,000
Engineering	68,000
Contingency and Escalation	95,000
TOTAL (Rounded)	$435,000

d. Increased Annual Operating Costs

Manpower	$ 60,000
Maintenance Supplies	7,000
Steam, Water, Electricity	32,000
TOTAL	$ 99,000

e. Schedule

(Months After Authorization)

Design		Construction	
Start	Finish	Start	Finish
1	4	2	8

f. Alternatives

Two alternative approaches were considered for resolving the ammonia scrubber solution problem. These included:

1) Providing a routing for the off-gases from aluminum and/or zircaloy dissolution to the filter and stack, bypassing the heater-silver reactor. Potential ammonium nitrate formation in the stack plenum, as well as gross discharge of ammonia to the atmosphere, made this solution undesirable.

2) Replacing the ammonia scrubber with a catalytic reactor to oxidize ammonia to nitrogen oxides. This solution was considered undesirable because the ammonia problem was replaced with a nitrogen oxide problem of comparable complexity and cost.

3) Providing alternative evaporation facilities as discussed in section D.

2. Battelle Northwest Laboratory, Douglas United Nuclear, and Atlantic Richfield Hanford Company — Special Services Wastes

Intermediate level wastes from the operation of Battelle Northwest Laboratory facilities in the 300 Area are transported to disposal sites located in the Atlantic Richfield Hanford Company controlled areas. Prior to 1967, these wastes contributed approximately 15,000 curies per year of total beta radioactivity to the ground. Specifications imposed by Isochem Inc. for wastes discharged to the new 216-T-35 crib have dictated storage and/or decontamination by evaporation of 50 percent of this waste stream. This reduced the radioactive discharge to the ground by a factor of 10. Waste evaporation capability installed at Redox is currently used. To further reduce radioactive discharge, the entire volume of intermediate level waste ($\sim 4 \times 10^6$ gallons/year) could be decontaminated by evaporation in the Redox facilities.

Periodic decontamination of the N Reactor and steam generator loops will generate an estimated 500,000 gallons per year of waste for disposal to Atlantic Richfield Hanford Company controlled areas. It is proposed that this waste, containing cobalt-60 as its major radioactive constituent, be decontaminated by evaporation in the Redox facilities.

Intermediate level wastes from the operation of the Atlantic Richfield Hanford Company special services equipment decontamination facility were routinely disposed to cribs prior to 1967. Specifications imposed on this stream for discharge to a new crib, 216-T-36, have dictated tank storage of approximately 50 to 75 percent of the waste generated, thereby significantly reducing the radioactivity discharged to the ground. Since this stream varies widely in radioactivity content, depending upon the equipment being cleaned, it is proposed that this stream, approximately 1×10^6 gallons/year, be decontaminated by evaporation in the Redox facilities.

a. Facilities Description

Waste solutions from Douglas United Nuclear and Battelle Northwest Laboratory would be transported to 202-S Building waste receiving station by rail tank car or truck tanker. Atlantic Richfield Hanford Company special services wastes would be routed to the 202-S Building via existing underground transfer lines. These three waste streams will be decontaminated by evaporation in the 202-S Building using the existing D-12 and D-14 evaporators.

b. Results Expected

Evaporation of these waste streams in the existing Redox facilities can be expected to provide a decontamination factor of 100. The radioactivity discharged to the ground in the condensate stream is expected to be 250 curies/year.

c. Capital Costs

None.

d. Increased Annual Operating Costs

Manpower	$104,500
Maintenance Supplies	12,500
Steam, Water, Electricity	56,000
TOTAL	$173,000

e. Schedule

Evaporation of the total volume of these waste streams at the Redox Plant could begin immediately if desired.

f. Alternatives

1) Scavenging tests for removal of long-lived radioisotopes (e.g., cesium-137 and strontium-90) from Battelle Northwest Laboratory wastes have shown that significant reductions are possible. However, treatment would be required after scavenging to meet MPC_w discharge.

2) Douglas United Nuclear 100-N Reactor decontamination wastes contain relatively high concentrations of chemical salts. Evaporation appears to be the best choice at present.

3) Provide alternative concentration facilities (see section D).

3. Process Condensate — Purex Plant

Condensates from the first cycle uranium concentrator (E-J8), second cycle uranium concentrator (E-K4), backcycle waste concentrator (E-H4), and from the acid absorber (T-F5) make up the Purex process condensate stream ($\sim 85 \times 10^6$ gallons/year). Process improvements and the change to normal paraffin hydrocarbon diluent have considerably reduced the radioactivity discharged (20,600 Ci in 1964; estimated 2000 Ci in 1967) in this stream. Approximately 95 percent of the radioactivity and 15 percent of the condensate volume are contributed by the acid absorber in the AAD stream. Recycle of the AAD stream and other process condensates, as possible, is the Scheme I preferred alternative for reducing the radioactivity discharged to the ground from this source.

a. Facilities Description

1) General

The process condensate streams would be recycled internally for use as water addition streams. The excess process condensate would be sampled and routed to crib. If the excess condensate stream is above cribable limits, it would be diverted to an empty tank in the C tank farm for storage. Ultimately, it would be pumped to existing evaporation facilities for decontamination.

2) 1UD, 2UD, and 3UD Process Condensate

The process condensates from the first and second uranium cycle condensers, the backcycle condenser, and the excess AFD from the acid fractionator recycle system would be rerouted to tank U3, located in the Purex Plant U-vault, for collection and recycle. As shown on figure 4 (drawing SK-2-21814), the process condensate from the E-H4 concentrator system (backcycle), the E-J8 concentrator system (first uranium cycle) and the E-K4 concentrator system (second uranium cycle) would be routed to TK-U3 via a new

6-inch header installed in the storage gallery. Core drilling through the 6-foot thick wall between the gallery and the cell would be required at three locations. New 4-inch wall nozzles would be installed in each location to transfer the condensates from the cells to the new header. New jumpers would be installed in the cells from the process condensate outlet nozzles of the condenser to the new wall nozzles.

A 200-gpm pump would be installed in TK-U3 for recycle of the process condensate. A new 6-inch header would be routed from TK-U3 to the cells via the storage gallery. Recycle lines would be installed into the cells through the same holes core-drilled for the routing of the process condensates to TK-U3. New wall nozzles would be installed for these lines also. Recycle streams would be the HSS-water, 1CX-water, and 2EX-water. New flow control instruments would be installed in jumpers in the cells for each of these streams. New jumpers would also be installed to provide the HSS-HNO_3, 1CX-HNO_3, and the 2EX-HNO_3, as shown on figure 4 (drawing SK-2-21814). The excess process condensate from the system would be routed to the process condensate header in the hot pipe trench via the H-cell opening. A new 4-inch nozzle and jumper would be provided in the cell. If the stream composition is within cribable limits, it would be routed to the 216-A-10 crib. If not, it would be diverted to the C tank farm as shown on figure 1 (drawing SK-2-21811). A proportional sampler, diversion station, radiation monitor, and pump pit would be installed to control the flow. Total flow would be measured, radiation levels would be detected, and proportional samples would be taken. Diversion to the pump pit would be automatically controlled. A new 4-inch, encased line would be installed from the pump pit to the C tank farm. Pumping to the empty tank in C tank farm would be initiated simultaneously with diversion. The 4-inch line installed to the tank farm would be in the same encasement provided for the ammonia scrubber waste routing previously discussed. The noncribbable process condensate waste would be transferred to existing evaporation facilities for decontamination and disposal on a campaign basis (202-S Building, 242-T evaporator, ITS units, or B Plant). Existing transfer lines would be used.

Since personnel access to the storage gallery is routinely necessary, a nominal amount of shielding would be required on the process condensate lines installed in the gallery.

3) <u>AAD Process Condensate</u>

A prototype installation is now in operation to evaluate the feasibility of recycling the process condensate from E-F5 to T-F5. On the basic assumption that feasibility will be

proven, equipment would be required for converting the prototype to a production unit. A small canyon tank, a vertical pump and the necessary jumpers would be provided for installation in F-cell.

b. Results Expected

Recycle of the AAD stream should reduce the radioactivity discharged in the process condensate stream to approximately 100 curies per year. Recycle of condensates from the first cycle uranium concentrator (E-J8) and the second cycle uranium concentrator (E-K4) as 1CX and 2EX is being investigated in the laboratory. If no adverse process effects are noted, the installation of the recycle scheme shown on figure 4 (drawing SK-2-21814) can be expected to further reduce the radioactivity discharged in process condensates to approximately 20 curies per year.

c. Capital Costs

The capital costs for implementing the recycle scheme in SK-2-21814 are as follows:

Installation	$268,000
Engineering	67,000
Contingency & Escalation	94,000
TOTAL (rounded)	$430,000

d. Increased Annual Operating Costs

Manpower (Maintenance)	$ 18,000
Maintenance (supplies)	8,500
Steam (at Purex)	62,700
Special Equipment Replacement	9,500
Evaporation (steam and electricity)	50,000
TOTAL (rounded)	$150,000

e. Schedule

(Months after Authorization)

Design		Construction	
Start	Finish	Start	Finish
1	12	3	20

f. Alternatives

Various alternatives could be employed for boiling off the excess which cannot be recycled or cribbed. Such alternatives are discussed in section D.

4. Steam Condensate — Purex Plant

Steam condensates from the process vessel coils are presently routed to the 216-A-6 and 216-A-30 cribs. Small volumes of liquid wastes from floor drains in the equipment disposal tunnel, from the water filled shielding door in the tunnel, from the slug storage basin, and from hosing down of cask cars in the tunnel are also routed to these cribs. In addition, raw water, at a rate of approximately 40 gallons per minute, is added to prevent flash point temperatures of Purex organic solvent, if present in the steam condensate header. An estimated 100×10^6 gallons containing 450 curies of total beta emitters will be discharged via this stream in 1967. A proportional sampler on this stream was recently returned to service; however, there are no radiation monitoring or diversion facilities associated with this stream. Although the radioactivity level in this stream is normally low, coil leaks could allow uranium or plutonium product or highly radioactive process solutions to be discharged to the cribs. Continuous radiation monitoring with the capability for diversion of the stream to an existing tank would be installed to minimize cribbing of high wastes. Radioactivity in the stream above the preset allowable limit would sound an alarm and divert the stream from the crib to a tank, permitting an orderly shut-down of building concentrators, detection of the source of the contamination, and repair prior to resumption of operations. Continuous proportional sampling capability and improved flow measuring capability would also be installed to provide more accurate measurement of radioactivity discharged to the ground.

a. Facilities Description

As shown on figure 1 (drawing SK-2-21811) and figure 3 (drawing SK-2-21812), detail II, a new steam condensate sampling pit and a new steam condensate diversion station would be installed. The sampling pit would be located close to the building, while the diversion station would be located near the cribs to allow some lag time for diversion of a detected contaminated stream.

Flow through the sampling pit would be recorded, totalized, proportionally sampled, and radiation recorded. Uncontaminated steam condensates would flow to the 216-A-30 or 216-A-6 cribs. At a preset radiation level, the radiation recorder controller would automatically divert the stream to a new 16-inch line leading to an empty tank in the 241-C tank farm. Ultimately, the contaminated steam condensate would be transferred to existing facilities (ITS #1, ITS #2, or B Plant) for decontamination by evaporation.

b. Results Expected

Successful operation of this monitor-diverter system could be expected to reduce the radioactivity in this stream to less than 10 curies/year.

c. Capital Cost

Installation	$ 98,000
Engineering	25,000
Contingency & Escalation	38,000
TOTAL (rounded)	$160,000

d. Increased Operating Costs

Manpower (Maintenance)	$ 8,500
Maintenance (supplies)	4,000
Evaporation (steam and electricity)	50,000
TOTAL (rounded)	$ 63,000

e. Schedule

(Months after Authorization)

Design		Construction	
Start	Finish	Start	Finish
1	6	3	6

5. Laboratory and Miscellaneous Wastes -- Purex Plant

Laboratory wastes and miscellaneous wastes consisting of stack drainage, stack liner drainage, stack liner flushes, 291-A Building filter sumps, 293-A Building floor drains, and 216-A floor drains are discharged to the 216-A-27 crib. It is estimated that a volume of 1×10^6 gallons, containing 150 curies of beta emitters, will be discharged to this crib in 1967. At present, approximately 90 per cent of the volume and activity are contributed by the laboratory wastes. It is proposed that noncontaminated laboratory wastes be segregated and routed to the 216-B-3 swamp via the chemical sewer. The remaining contaminated laboratory wastes and the miscellaneous wastes ($\sim$ 200,000 gallons/year) would be collected and routed to concentration equipment within the Purex Plant.

a. Facilities Description

1) General

The 216-A-27 crib, which receives laboratory wastes and miscellaneous wastes from 216-A tank 2, would be abandoned. Noncontaminated wastes from the laboratories would be routed to the chemical sewer and contaminated laboratory wastes, along with the miscellaneous wastes from 216-A tank 2, would be routed to TK-F18 for processing in the canyon waste system.

2) Laboratory Wastes

Within fiscal year 1968, the noncontaminated wastes from the Purex laboratory will be rerouted to the chemical sewer. Since TK-U3 would be used exclusively for process condensate recycle, TK-U4 would be used to collect the contaminated laboratory wastes. These would be routed to TK-F18 in the canyon for processing in the waste system. As shown on figure 3 (drawing SK-2-21812), detail IV, a new jumper is required in the 241-A-151 diversion box and one in the canyon to permit this routing. The existing TK-U4 jet-out piping will be used.

3) Miscellaneous Waste

The miscellaneous wastes collected in the 216-A-TK-2 catch tank consist of 291-A stack drainage, 291-A stack liner drainage, 291-A stack liner water flushes, 291-A filter sumps, 293-A Building floor drains, and 216-A Building floor drains. As shown on figure 1 (drawing SK-2-21811) and figure 3 (drawing SK-2-21812), detail IV, these wastes would be routed to TK-F-18 in the canyon for waste processing. The existing pump-out jet and piping in 216-A would be used to pump to TK-F18 via a new tie-in with the presently used laboratory waste bypass (of 216-A-TK-2) line. It would be used for routing between 216-A-TK-2 and the 241-A-151 diversion box. The vent and discharge line to crib 216-A-27 would be blanked. A new diversion box and jumper and an in-cell jumper and piping would be installed for routing from the wall nozzle at TK-F16 to TK-18.

b. Results Expected

Routing of the noncontaminated laboratory waste waters to the swamp, and concentration and storage of the contaminated laboratory and miscellaneous wastes would reduce the radioactivity to the ground by 150 curies per year. The existing 216-A-27 crib would be abandoned.

c. Capital Costs

Installation	$ 10,000
Engineering	2,500
Contingency & Escalation	3,500
TOTAL	$ 16,000

d. Increased Operating Costs

Maintenance (manpower)	$ 5,500
Maintenance (supplies)	2,700
Evaporation (Steam and Electricity)	10,000
TOTAL	$ 18,200

e. Schedule

(Months after Authorization)

Design		Construction	
Start	Finish	Start	Finish
1	6	2	12

6. 241-A and AX Tank Farm Condensate

During 1967, approximately 7 x 10^6 gallons of tank farm condensate containing 50 curies of beta emitters, including 35 curies of cesium-137, will be discharged to the 216-A-8 and 216-A-24 cribs. The volume discharged during 1967 has increased by a factor of two over previous years due to the operation of a steam coil for concentration of organic wash waste (OWW) in the 101-AX tank. The steam condensate is discharged to the above cribs at an average rate of 4 to 5 gallons/minute. The addition of water in place of condensate recycle to the 105-A tank also contributed to the increased volume to the cribs.

It is proposed that ion exchange facilities be installed to remove cesium-137, strontium-90, cerium-144, and zirconium-niobium-95 from this waste stream. The expected volume of tank farm condensate requiring treatment would be in the range of 2 to 3 x 10^6 gallons per year. Present plans call for routing the OWW stream from the self-concentrating tanks to nonboiling waste storage. However, the addition of B Plant IOW, and its trace organic content, will require steam stripping of the process condensate for organic removal prior to ion exchange.

a. Facilities Description

1) General

The Purex tank farm condensate would be treated by steam stripping and by two stages of ion exchange for removal of cesium, strontium, cerium, and zirconium. The steam stripping operation would remove organic which hinders the efficiency of the ion exchange operation. The first ion exchange column would remove the cesium, and the other contaminants would be removed in the second column. These fission products would be eluted from the ion exchange resins in the columns, and the resulting waste solutions would be routed to underground storage. The treated effluent would be routed to the 216-A24 crib for disposal. A new facility would be installed to provide these condensate treatment processing operations, as shown on figure 5 (drawing SK-2-21815).

2) Equipment Description

Condensate would be pumped from TK-417 to a new 5000-gallon underground tank, which would serve as the feed tank for the steam stripper. A new 4-inch line would be installed from the TK-417 pump pit to the new tank for this routing. As shown on figure 5 (drawing SK-2-21815), the feed tank would be equipped with normal tank type instrumentation, together with an agitator and a sampler. The condensate would be pumped through a flow controller to the top of the packed section of the stripper.

The stripper would consist of two sections, a stripping column and a thermosyphon reboiler. The stripping section would be 33 inches diameter, 10 feet high, packed column. The feed for the column would enter above the packed section and flow downward through the packing. Steam generated in the reboiler would pass up through the packing and remove the organic from the feed in countercurrent contacting.

The reboiler section would be a thermosyphon type unit with a heat transfer capacity of 5.75×10^6 Btu/hour. Steam would be flow-controlled, and the condensate would be routed to swamp via a new proportional sampler pit in the cooling water disposal header. Flow integration and radiation monitoring would also be provided at the sampler pit, as shown on figure 3 (drawing SK-2-21812), detail II.

The steam from the stripper would be routed to a condenser, rated at 5×10^6 Btu/hour. Condensate from the condenser would be collected in a 30-gallon decanter. The aqueous stream from the decanter would be sent to the 216-A-24 crib

for disposal. Both it and the condensate from the vessel vent condenser would be routed to the crib via a new proportional sampler pit, which would also include flow integration and radiation monitoring instrumentation. The organic stream from the decanter would be collected in a 1000-gallon organic waste storage tank. This tank would be located above ground, and may require some shielding. Normal storage tank instrumentation would be provided along with a vertical pump. The organic waste would be transferred from this tank to the new organic waste disposal facility by tank truck. A new truck loading station would be provided at the facility.

The stripped condensate would be routed to a 5000-gallon underground tank which would serve as the first ion exchange column feed tank. The feed tank would be equipped with normal tank instrumentation, together with an agitator and a sampler. The feed stream to the column would be filtered and flow-controlled. The resulting effluent from the first column loading step would be collected in a second 5000-gallon underground tank, which would serve as the feed tank for the second column. The second feed tank would be equipped similarly to the first feed tank. In addition, a pH indicator would be installed to permit chemical adjustment of the solution prior to loading the second column. A 1000-gallon nitric acid tank would be installed to provide the acid for this step.

The ion exchange columns would be 2 feet in diameter and 10 feet high. Temperature and pressure measurements would be recorded at both the top and bottom of the columns. Liquid level and resin level indicators would be installed on both columns.

The effluent from the second column would be routed to a new sampler pit, from which it would flow to the 216-A-24 crib. The sampler pit would include a proportional sampler, a flow integrator, and a radiation recorder alarm, as shown on figure 3 (drawing SK-2-21812), detail II.

Two 1000-gallon eluant tanks would be installed, each equipped with a pump, a flow recorder controller, an agitator, and normal tank instrumentation. These tanks would provide eluant to each of the columns for eluting off the contaminants from the resin. The eluant for the first column would be sodium nitrate. The eluted cesium would be routed to underground storage via a new 3-inch line to the 241-A-152 diversion box. The eluant for the second column would be 4 M HNO_3. The eluted fission products from the second column would be routed to a 1000-gallon neutralization tank located in the underground vault along with the three feed tanks. A 1000-gallon caustic tank would also be installed to provide caustic for

neutralization of the acidic stream. After neutralization, the waste would be transferred to underground storage via the new 3-inch line. The caustic tank would be equipped with normal tank instrumentation and an agitator. A steam coil would also be provided for tank heating. The neutralization tank would also be equipped with normal tank instrumentation, a vertical pump, and an agitator. A coil would be installed for tank cooling.

A vessel vent system would be installed for venting the feed tanks, the stripper-condenser, the neutralization tank, and the ion exchange columns. The vent off-gases would be heated in a steam heater, and then passed through two stages of filtration. A steam jet would provide the system vacuum. A condenser would be installed to condense the motive steam. The noncondensibles would be discharged from the condenser to atmosphere via a small stack.

3) Building Description

The new facility required to house this equipment would cover an area 33 feet x 58 feet. The three feed tanks and the neutralization tank would be installed in a concrete vault, enclosed at the top with cover blocks.

The ion exchange columns and the stripper-condenser equipment would be installed in a lightly-shielded enclosure located above ground. Personnel access would be provided for maintenance and resin removal operations.

The vessel vent equipment and the feed pumps would also be located above ground in a lightly-shielded enclosure, mainly for contamination control. Personnel access would be provided.

The eluant tanks, the nitric acid tank, the organic waste tank, and the pumps associated with these tanks would be installed above ground, open to the atmosphere. A control room and a piping gallery to service the underground tanks would be located above ground, adjacent to the shielded enclosures. All instrument read-outs for the facility would be located in the control room.

4) Resin Removal and Disposal

Contaminated resin would be removed from the ion exchange columns and packaged in a dry form in metal containers. These containers would be transferred to permanent storage vaults.

b. Expected Results

Zeolite ion exchange should provide a decontamination factor of 100 for cesium-137. An ion exchange column of polystyrene resin, such as IR-200, should provide a decontamination factor of 1000 for strontium-90. Successful operation of the proposed ion exchange treatment facility should provide the capability for MPC_w discharge of this waste stream.

c. Capital Cost

Installation	$550,000
Engineering	138,000
Contingency & Escalation	192,000
TOTAL	$880,000

d. Increased Annual Operating Costs

Manpower	$101,400
Maintenance Supplies	15,600
Steam and Electricity	44,400
Essential Materials	3,100
TOTAL	$164,500

e. Schedule

(Months after Authorization)

Design		Construction	
Start	Finish	Start	Finish
1	12	3	24

f. Alternative

Re-evaporation would also provide decontamination to permit MPC_w discharge.

7. Process and Steam Condensates -- B Plant

The operation of B Plant for fission product removal and waste concentration will generate 4 to 8 x 10^6 gallons of process condensate per year. Successful operation of de-entrainment capability installed on the cell 23 waste concentrator could reduce the radio-

activity discharged to the 216-B-12 crib to < 100 curies of beta emitters per year. Steam condensates, discharged to the 216-B-55 crib, are estimated at 10 to 15 x 10^8 gallons/year, containing < 10 curies of beta emitters. However, faulty operation of the waste concentrator or steam coil leaks could result in discharges of multi-curie quantities of cesium-137 and strontium-90 to either of these streams. Radiation monitoring, diversion and collection of abnormal radioactive discharges from either stream for decontamination through ion exchange columns is proposed.

a. Facilities Description

1) General

Process condensate and steam condensate from the 221-B Building evaporators would be diverted for clean-up in a new facility when contamination is detected in the stream. Normally, each would be cribbed, and only the contaminated stream would be diverted when necessary. Two stages of ion exchange would be provided to remove cesium and strontium. The treated effluent would be discharged to the 216-B-55 crib, which is normally used for disposal of the high-risk steam condensate. The new facility is shown on figures 6 and 7 (drawings SK-2-21816 and SK-2-21817).

2) Equipment Description

A new diversion pit containing control valves would be installed in the process condensate line which is routed to the 216-B-12 crib. A similar pit would be installed in the steam condensate line which is routed to the 216-B-55 crib. These pits would be located west of the 221-B Building. Each line would be diverted to a new 50,000-gallon storage tank located in an underground vault near the new pits. Also located in the underground vault would be two 1000-gallon column feed tanks and a 5000-gallon waste tank. Each of these tanks would be equipped with normal tank instrumentation, including samplers, except for the condensate storage tank, which would be equipped with a radiation recorder. The condensate solution would be pumped to the #1 column feed tank, from which it would be pumped to the #1 column for removal of cesium. The effluent from the #1 column would be collected in the #2 column feed tank, from which it would be pumped to the #2 column for strontium removal. Flow recorder controllers would be installed in the feed lines to the columns. The effluent from the #2 column would be pumped to a new proportional sampler pit as shown on figure 3 (drawing SK-2-21812), detail II. Flow integration and radiation recording would also be performed at this point. The solution would then be routed to the 216-A-55 crib for disposal.

The ion exchange columns would be 2 feet in diameter and 10 feet high. Temperature and pressure measurements would be taken at the top and at the bottom of each column. Each would also have a liquid level indicator and a resin level indicator.

Cesium and strontium would be periodically eluted from the columns and stored in the waste tank. Two 1000-gallon eluant tanks would be provided. Each would be equipped with normal tank instrumentation, agitators, and pumps. The eluant for the first column would be sodium nitrate, and the eluant for the second column would be 4 M HNO_3. A 1000-gallon caustic tank would also be installed to provide for neutralizing the acidic eluant from the second column. This would be performed in the waste tank, which would be equipped with an agitator and a cooling coil. The caustic tank would be equipped with normal tank instrumentation, an agitator, pump, and a heating coil. After neutralization, the waste would be transferred to underground storage by truck. A new truck loading station would be provided at the facility for this use.

A vessel vent system would be installed to vent the columns. A de-entrainer, an electric heater, and a high efficiency filter would be provided in the system for ventilation off-gas treatment. An air ejector would provide vacuum and discharge would be to atmosphere.

3) Building Description

As mentioned above, there would be one large and three small tanks located in an underground vault. All of the instruments for these tanks would be read out in the control room. The ventilation equipment and the ion exchange columns would be located in a nominally-shielded enclosure which would have personnel access for maintenance. Read-out for this equipment would also be located in the control room. The two eluant tanks would be located outside, with read-outs located in the control room. The control room would be located adjacent to the shielded enclosure and equipped with an air lock for entry. The cold side piping gallery for all of the process equipment would also be located in the control room.

b. Results Expected

Processing of off-standard process condensate and/or steam condensate through the ion exchange facilities will provide a decontamination factor of 100 for cesium-137 and 1000 for strontium-90. Since the ion exchange facilities are not sized to process the entire volume of process and steam condensates, the discharges to the ground may be expected to be a factor of 5 to 10 above MPC_w.

c. Capital Cost

Installation	$478,000
Engineering	122,000
Contingency & Escalation	169,000
TOTAL (rounded)	$770,000

d. Increased Annual Operating Costs

Manpower	$ 85,200
Maintenance Supplies	7,800
Essential Materials	5,700
TOTAL	$ 98,700

e. Schedule

(Months after Authorization)

Design		Construction	
Start	Finish	Start	Finish
1	12	3	24

f. Alternatives

1) Ion exchange facilities sized to process the total process condensate and up to 20 percent of the steam condensate should provide MPC_W discharge.

2) Collection and evaporation of nonstandard streams as proposed in scheme II will also provide MPC_W discharge of these waste streams.

8. Steam and Process Condensates -- 242-T Building

Process condensates from waste concentration in the 242-T Building are batch collected, sampled, and analyzed prior to discharge to the 216-T-19 crib. During 1967, an estimated 3×10^6 gallons of waste, containing 10 curies of beta emitters, including 4 curies of cesium-137, will be discharged to this crib. An additional 4×10^6 gallons of steam condensate will also be discharged to this crib in 1967. Design modifications, when installed, will increase the process and steam condensates to 5×10^6 gallons and 6.5×10^6 gallons per year, respectively. It is proposed that ion exchange be installed for cesium-137 removal from the process condensate stream, and that radiation monitoring be installed on the steam condensate stream. Continuous proportional sampling,

radiation detection, and volume measurement capability for the combined streams discharged to the crib would also be provided.

a. Facilities Description

1) General

The process condensate from the 242-T Building evaporator would be treated with a single stage of ion exchange to remove fission product contaminants from the stream. The treated condensate would be routed to crib after being sampled. The facilities are shown on figures 8 and 3 (drawings SK-2-21819 and SK-2-21820).

2) Equipment Description

The process condensate is presently collected in two catch tanks prior to disposal. These catch tanks would be equipped with agitators and would serve as the feed tanks for the ion exchange column. A pump would be installed to pump the condensate to the top of the ion exchange column. A radiation recorder will be installed in the effluent line from the bottom of the ion exchange column, which will be routed to the 216-T-19 crib via a new proportional sampler pit. Separate monitoring is provided for the effluent stream, as both steam condensate from the evaporator and the motive water from the vent jet can also be routed to crib via the sampler pit. Flow integration and radiation monitoring will also be provided in the sampler pit, as shown on drawing SK-2-21812, detail II. A radiation recorder alarm will be installed on the evaporator steam condensate discharge line, also.

The ion exchange column would be 2 feet in diameter and 10 feet high. Temperature and pressure measurement would be provided at the top and bottom of the column. A liquid level and resin level indicator would also be installed on the column.

A 1000-gallon eluant tank and an eluant pump would be installed to handle the sodium nitrate, the eluant. A flow recorder controller would regulate the flow of eluant to the column. Eluted wastes would be routed to underground storage, together with the concentrate from the evaporator. A new hot tie-in would be provided to connect these two streams. Normal tank instrumentation would be installed on the eluant tank.

An air ejector would be installed to provide vacuum for the ion exchange column. The discharge from the jet would be filtered and routed to the atmosphere.

3) Building Description

As shown on figure 8 (drawing SK-2-21819), the ion exchange column and the pumps would be installed within a nominally-shielded enclosure installed in one section of the catch tank cell of the 242-T Building. Personnel access would be provided for maintenance and for resin removal operations. The eluant tank would be located just outside of the building.

The new proportional sampling pit would be installed in the waste line, which passes just southeast of the 242-T Building. Read-out of all instruments would be made in the 242-T Building, where a new panel board would be installed.

b. Expected Results

Successful operation of the proposed ion exchange and monitoring facilities will provide MPC_W discharge of these waste streams.

c. Capital Costs

Installation	$150,000
Engineering	38,000
Contingency & Escalation	52,000
TOTAL (rounded)	$240,000

d. Increased Annual Operating Costs

Manpower	$ 34,000
Maintenance Supplies	7,800
Essential Materials	6,000
TOTAL	$ 47,800

e. Schedule

(Months after Authorization)

Design		Construction	
Start	Finish	Start	Finish
1	8	3	16

f. Alternatives

Continue to crib without treatment.

9. Process Condensate — In-Tank Solidification Unit Number 2

In-tank solidification unit number 2 will begin operation in December, 1967. The expected 7 to 8 x 10^6 gallons per year of process condensate will contain 50 to 75 curies of beta emitters, including 25 to 40 curies of cesium-137. It is proposed that ion exchange facilities be installed for removal of cesium-137. Since the Purex organic wash wastes will be routed to nonboiling waste storage for subsequent concentration by ITS number 2, pretreatment of the process condensate for organic removal is required prior to ion exchange processing.

a. Facilities Description

1) General

The process condensate from the #2 in-tank solidification unit (ITS #2) would be treated for the removal of contaminants in a similar manner as the condensate of ITS #1. This would require the installation of a catch tank, a Brink type de-entrainer, a stripper, and an ion exchange column. The stripper would remove organic from the condensate stream, as it hinders the removal of cesium in the ion exchange column. New facilities would be required for the installation of this equipment, and these would be located near the existing facilities, adjacent to the 241-BY-112 tank. The new facilities are shown on figures 6 and 9 (drawings SK-2-21816 and SK-2-21818).

2) Equipment Description — Off-Gas Treatment

The existing condenser serving tank FY-112 would be removed from its present location and re-installed downstream of a new Brink type de-entrainer. The off-gas would be routed to the Brink unit, which would drain to the catch tank. After this treatment, the off-gas would be routed to the condenser, where the condensate would drop out and collect in the 5000-gallon stripper pump tank. The noncondensed gases would then be routed through the existing heater and filter and be sent to the stack via the existing fan. The catch tank would be emptied periodically by discharging the waste to underground storage.

3) Equipment Description — Condensate Treatment

The 5000-gallon stripper pump tank would be equipped with normal tank instrumentation, agitation, and a sampler. The condensate would be pumped through a flow controller to the top of the stripper.

The stripper would consist of two sections, a stripping column and a thermosyphon reboiler. The stripping section would be a 33-inch diameter, 10-foot high, packed column. At the top of the packed section, a wire mesh de-entrainment pad would be installed. Differential pressure readings would be taken across the packed section and the wire mesh pad. Feed to the column would be pumped to the top of the packed section. Steam generated in the reboiler would pass up through the column and remove the organic from the feed in countercurrent contact.

The reboiler section would be a thermosyphon type unit with a heat transfer capacity of 5.75×10^6 Btu/hour. Steam would be flow-controlled and the condensate routed to swamp via a new proportional sampler pit and a pump pit. The cooling water from the two condensers would also be discharged to swamp through the same sampler and pump pits. Flow integration and radiation monitoring will be provided also, as shown on figure 3 (drawing SK-2-21812), detail II.

The steam from the stripper would be routed to a condenser, rated at 5×10^6 Btu/hour. Condensate from the condenser would be collected in a 30-gallon decanter. The aqueous stream from the decanter would be sent to the 216-B-57 crib for disposal. The stream would be monitored in a new sampling pit which would provide proportional sampling, flow integration, and radiation monitoring. The organic stream from the decanter would be collected in a 1000-gallon organic waste storage tank. Normal storage tank instrumentation would be provided along with a vertical pump. The organic waste would be transferred from this tank to the new organic waste disposal facility by tank truck. A new truck loading station would be provided at the facility.

The stripped condensate would be routed to a 2500-gallon tank, which would serve as the ion exchange column pump tank. The tank would be equipped with normal tank instrumentation, agitation, and a sampler. Feed to the ion exchange column would be flow-controlled from the pump tank.

The ion exchange column would be 2 feet in diameter and 10 feet high. Temperature and pressure measurements would be provided at the top and bottom of the column. A liquid level and a resin level indicator would be installed on the column. Effluent from the column would be discharged to the 216-B-57 crib via a new proportional sampler pit. Flow integration and radiation monitoring would be provided also, as shown on figure 3 (drawing SK-2-21812), detail II. Contaminants would be eluted

from the resin column using sodium nitrate as eluant. A 1000-gallon eluant tank would be installed for eluant storage. Elution would be flow-controlled, and eluant would be routed from the column to underground storage. A new tie-in to one of the BY tanks would be provided for collection of this stream and the contaminated scrub water mentioned above.

Vacuum requirements for the stripper, condenser, and the ion exchange column would be provided by a new 50 cfm fan which would discharge to the existing stack at TK-BY-112. The system would be equipped with normal vent system instrumentation.

The collection of the fission product contaminated waste stream in underground tanks in the BY farm assumes the availability of such tanks. With the implementation of the ITS #2 program and the continuance of the ITS #1 program, such tank storage capacity will eventually be available for this use.

4) Building Description

As shown on figure 9 (drawing SK-2-21818), the new equipment would be installed adjacent to the existing ITS #2 facilities. The three new proportional sampler pits would be located near TK-BY-112, and an addition to the control room would be made. A 24-foot by 36-foot area would be provided for the installation of the equipment. Except for the ion exchange column, all the equipment would be located out in the open. A nominally-shielded enclosure would be provided for the ion exchange column. Personnel access to the shielded enclosure would be provided for maintenance. Light shielding may also be needed for the feed tanks, organic waste storage tank, and the scrubber recirculation tank, which are all located above ground.

b. Expected Results

Organic wastes will be removed from the condensate stream and stored for disposal by combustion or other acceptable methods. The zeolite ion exchange treatment is expected to provide MPC_W discharge for the aqueous waste stream.

c. Capital Cost

Installation	$510,000
Engineering	128,000
Contingency & Escalation	182,000
TOTAL (rounded)	$820,000

d. Increased Annual Operating Cost

Manpower	$ 85,200
Maintenance Supplies	7,800
Steam and Electricity	67,900
Essential Materials	10,000
TOTAL	$170,900

e. Schedule

(Months after Authorization)

Design		Construction	
Start	Finish	Start	Finish
1	15	3	30

f. Alternative

Continue to crib without treatment.

10. Cooling Water Disposal — Purex

Cooling water from the coils and condensers at the Purex Plant is routed to the 216-A-25 (Gable Mountain) swamp. A portion of the flow leaving the Purex Plant is pumped to the 241-A-201 tank for reuse as cooling water in the 241-A and AX tank farms. A sampler is located in the 241-A-201 pump pit. The major flow of cooling water is combined with that diverted for use at the tank farms at a diversion box west of the 216-B-3 swamp, and the total flow rate is measured and totaled. Existing valving, upstream of the 216-A-25 flow totalizer, can be used to divert a portion of the stream to the 216-B-3 swamp. The flow to the 216-B-3 swamp is measured and totalized. It is expected that 3×10^9 gallons of cooling water containing 300 curies of beta emitters, including 100 curies of ruthenium-106, will be discharged to the swamps in 1967.

It is proposed that radiation monitoring, continuous proportional sampling, and volume measurement capability be installed on this stream. Radioactivity in the stream above the preset allowable limit would sound an alarm and alert Purex Plant personnel, permitting an orderly shut-down of the plant, detection of the source of the comtamination, and repair prior to resumption of operations.

a. Facilities Description

As shown on figures 1 and 3 (drawings SK-2-21811 and SK-2-21812), detail II, a new sampling pit would be installed on the Purex cooling water disposal line which discharges to the 216-A-25 swamp. Flow would be recorded and totalized. A proportional sampler would be installed to furnish a permanent record of any activity that might be present. A radiation recorder alarm would also be installed to record and sound the alarm for any unusual situation. The sampler pit would be located out near the 241-AX tank farm to also monitor the flow of cooling water from the 241-A and AX tank farms.

b. Expected Results

The radioactivity discharged to this stream is generally below the MPC_w. The proposed facility will provide early detection of radioactivity and more accurate measurement of the volume and radioactivity discharged to the swamp.

c. Capital Costs

Installation	$ 22,000
Engineering	5,000
Contingency & Escalation	7,500
TOTAL (rounded)	$ 35,000

d. Increased Annual Operating Costs

Manpower	$ 2,100
Maintenance Supplies	1,000
TOTAL	$ 3,100

e. Schedule

(Months after Authorization)

Design		Construction	
Start	Finish	Start	Finish
1	6	2	12

11. Acid Fractionator Process Condensate -- Purex Plant

The condensate from the acid fractionator (T-U6) is now condensed in a barometric condenser; and the total stream, approximately 420 gpm, is discharged to the 216-B-3 swamp via the 216-A-29 ditch. This stream is the primary source of radioactivity, essentially all ruthenium and iodine, discharged to these sites. An estimated 150 curies of beta emitters, including 50 curies of ruthenium-106, will be discharged to these open disposal sites in 1967.

Replacement of the barometric condenser on the acid fractionator with a surface condenser has been authorized at a cost of $90,000. Installation should be completed by September, 1968. The process condensate stream, about 20 gpm, will be discharged to a crib, possibly 216-A-9.

It is proposed that the acid fractionator condensate stream be recycled, as reflux water, to the vacuum acid fractionator. Excess condensates would be added to the previously discussed Purex process condensate recycle system.

a. Facilities Description

The process condensate would be collected in tank U7, in Purex U-vault, as shown on figure 4 (drawing SK-2-21814). A new recirculation pump will be installed to recycle process condensate to the top of the acid fractionator. It would also provide recycle water to the XA-water and XB-water systems in 293 Building, the dissolver-off-gas recovery facility. Excess AFD from TK-U7 would be transferred to TK-U3 for blending with the canyon process condensates.

A new 2-inch line would be routed from TK-U7 to the east end of the 202-A Building, where it would be tied into an existing 2-inch line to the 293-A Building. The new line would be routed out of the east end of Purex U-vault underground. It would then be routed up along the side of the 202-A Building high enough to clear the railroad tunnel and around the end of the building, where the tie-in would be made. Nominal shielding would be provided as required.

b. Expected Results

Installation of the surface condenser would reduce the radioactive discharges to the 216-A-29 and 216-B-3 surface disposal sites to MPC_w or less. Installation of the recycle system would reduce the radioactivity discharged to the cribs by 150 curies/year.

c. Capital Costs

Installation	$ 8,000
Engineering	2,000
Contingency & Escalation	2,800
TOTAL (rounded)	$ 13,000

d. Increased Annual Operating Costs

Manpower	1,900
Maintenance — Supplies	900
Equipment	2,000
TOTAL	$ 4,800

e. Schedule

(Months after Authorization)

Design		Construction	
Start	Finish	Start	Finish
1	3	3	6

12. Cooling Water and Steam Condensate — B Plant

Two cooling water headers are used at the 221-B Building. One can be classified as a low-risk stream; the other is classified as a medium-risk stream, and consists of cooling water and steam condensates. Both streams are collected in the retention basin and sampled prior to discharge to the 216-B-3 swamp via the 216-B-2 ditch. Both headers are provided with radiation monitoring instrumentation and alarms. In addition, the medium-risk header has diversion valving which automatically diverts the stream to the 216-B-59 trench on detection of radioactivity above the preset radiation limit.

It is proposed to route the diverted stream to an empty tank in the 241-B tank farm instead of the open trench. The waste collected would be processed in the ITS #2 facility.

a. Facilities Description

As shown on figure 6 (drawing SK-2-21816), a new 16-inch encased line, approximately 2400 feet long, would be installed from the diversion point to the 216-B-59 ditch to an empty tank in the B tank farm. Existing instruments would be used to detect the contamination and generate the signal. New valves would be installed at the point of diversion to provide automatic operation.

b. Expected Results

In the event of coil failure and resultant radioactivity discharge to the cooling water stream, the radioactivity would be contained rather than discharged to the ground.

c. Capital Costs

Installation	$ 79,000
Engineering	20,000
Contingency & Escalation	27,000
TOTAL (rounded)	$125,000

d. Increased Annual Operating Costs

Increased operating costs of the diversion system modification would be nil. Evaporation of the stored waste resulting from diversion would be approximately 10 cents per gallon.

e. Schedule

(Months after Authorization)

Design		Construction	
Start	Finish	Start	Finish
1	6	4	9

13. Chemical Sewer -- Purex Plant

Removal of the acid fractionator condensate stream from the wastes discharged to the 216-Z-29 ditch would eliminate the major source of radioactivity discharges to this site. It is proposed to install radiation monitoring, continuous proportional sampling, and volume measurement capability on the chemical sewer effluent stream discharged to the 216-A-29 ditch. These facilities would detect abnormal radioactivity in the stream and alert operations personnel so that the source of the radioactivity could be determined and repairs quickly made. The sampling and volume measurement capability would provide a more accurate record of volume and radioactivity discharged to the site.

a. Facilities Description

As shown on figures 1 and 3 (drawings SK-2-21811 and SK-2-21812), detail II, a new sampling pit would be installed on the Purex chemical sewer line which discharges to the 216-A-29 swamp. Flow would be recorded and totalized. A proportional sampler would be installed to furnish a permanent record of any activity that might be present. A radiation recorder alarm would also be installed to record and sound the alarm for any unusual situation.

b. Results Expected

A more accurate record of volume and radioactivity discharged to the 216-A-29 ditch would be provided. Radiation detection and alarm would also permit quick recognition and correction of conditions which could result in radioactivity release.

c. Capital Costs

Installation	$ 22,000
Engineering	5,000
Contingency & Escalation	7,500
TOTAL (rounded)	$ 35,000

d. Increased Annual Operating Costs

Manpower	$ 2,100
Maintenance Supplies	1,000
TOTAL	$ 3,100

e. Schedule

(Months after Authorization)

Design		Construction	
Start	Finish	Start	Finish
1	6	2	12

14. Cooling Water and Steam Condensates — 241-AR Vault

Cooling water and steam condensates from the 241-AR vault are discharged to the 216-A-25 (Gable Mountain) swamp. The four processing tanks are all equipped with coils. However, only two of the tanks are used alternately for heating and cooling. No radiation monitoring, volume measurement, or proportional sampling capability is presently installed on this waste water stream. Although the possibility of a coil leak appears to be small, the tanks will contain high-level waste solutions. Therefore, continuous radiation monitoring of this stream should be installed. Radioactivity in the waste water above the preset allowable limit would sound an alarm and automatically divert the stream from the swamp to an existing 241-C waste storage tank until the source of the radioactivity could be found and emergency remedial action taken. In addition, continuous proportional sampling and volume measurement capability would be installed.

a. Facilities Description

As shown on figures 1 and 3 (drawings SK-2-21811 and SK-2-21812), detail II, a new sampling and diversion pit would be installed on the AR vault waste cooling water line which discharges to the Gable Mountain swamp. Flow would be recorded and totalized. A proportional sampler would be installed to furnish a permanent record of any activity that might be discharged to the swamp. A radiation recorder-controller alarm would be installed to record and to divert the stream to the C tank farm should activity be detected. Approximately 1300 feet of 12-inch pipe would be installed from the diversion station to C tank farm.

b. Expected Results

Detection of radioactivity leakage into this stream would alert operations personnel, who would shut down the operation, determine the source of the radioactivity, and schedule necessary repairs. Early detection of radioactivity should prevent large discharges of radioactivity to the environment in this stream. The sampling and volume measurement capability would provide more accurate records for inventory purposes.

c. Capital Costs

Installation	$ 90,000
Engineering	23,000
Contingency & Escalation	32,000
TOTAL	$145,000

d. Increased Annual Operating Costs

Manpower	$ 2,100
Maintenance Supplies	1,000
TOTAL	$ 3,100

NOTE: In the event of radioactivity in-leakage to this stream, additional costs for decontamination by evaporation would be incurred.

e. Schedule

(Months after Authorization)

Design		Construction	
Start	Finish	Start	Finish
1	6	2	12

f. Alternative

Continue swamp discharge as is presently done.

15. Crane Maintenance Facility Waste -- Purex Plant

Wastes from the decontamination sink, the decontamination shower, and two floor drains in the east crane maintenance facility are routed to the 216-A-32 crib for disposal. There are no existing facilities for collection or sampling of these wastes. It is proposed that collection and sampling facilities be provided.

a. Facilities Description

As shown on figures 1 and 3 (drawings SK-2-21811 and SK-2-21812), detail II, a new 1000-gallon underground catch tank would be installed. All waste to the crib would be intercepted and sampled prior to disposal. Cribable material would be pumped to the 216-A-32 crib, and noncribable material would be trucked to the 202-S Building. A new truck loading station located near the crib would be installed. The contaminated waste would be handled in the Redox waste evaporators for clean-up prior to disposal.

b. Expected Results

The radioactivity and volume of this waste stream are not presently known. The installed facilities would provide retention and/or discharge of a known volume and radioactivity to the existing 216-A-32 crib.

c. Capital Costs

Installation	$ 29,000
Engineering	7,300
Contingency & Escalation	7,700
TOTAL	$ 44,000

d. Increased Annual Operating Costs

Manpower	$ 2,800
Maintenance Supplies	1,300
TOTAL	$ 4,100

Additional costs for transportation and evaporation of these wastes will be dependent on the volume to be handled. This volume is not known.

c. Schedule

(Months after Authorization)

Design		Construction	
Start	Finish	Start	Finish
1	6	2	12

16. French Drains -- Purex Plant

Although the radioactivity content of liquid wastes discharged to French drains at the Purex Plant is expected to be low, liquid volumes and radionuclide concentrations are not presently known. It is proposed that radiation detection probes and alarms be installed in the French drains used by the Purex Plant. If it is determined that significant radioactivity is being discharged to these sites, collection, sampling, and volume measuring facilities would be installed at a later date.

a. Facilities Description

As shown on figures 1 and 3 (drawings SK-2-21811 and SK-2-21812), radiation indicator alarms would be installed on the inlet lines to some French drains. The following listed French drains would be retained in service, as the possibility of discharging significant amounts of contaminated waste to these French drains is small: 216-A-11, 216-A-12, 216-A-14, and 216-A-26-A. These French drains would be equipped with the radiation indicator alarms, which will announce an unusual discharge situation.

b. Expected Results

Installation of the radiation monitoring probes and alarms would determine whether unknown radioactive waste streams are being discharged to the ground.

c. Capital Costs

Installation	$ 10,000
Engineering	2,500
Contingency & Escalation	3,500
TOTAL	$ 16,000

d. Increased Annual Operating Costs

Manpower	$ 1,900
Maintenance Supplies	900
TOTAL	$ 2,800

e. Schedule

(Months After Authorization)

Design		Construction	
Start	Finish	Start	Finish
1	3	2	10

17. French Drains -- 203-A Facility -- Purex Plant

Volumes and radioactivity of liquid wastes from the UNH loading and HNO_3 unloading areas to French drains and the 216-A-3 crib are not routinely measured. It is proposed that these wastes be collected, sampled, and evaluated prior to disposal to the 216-A-3 crib or transferred to the 202-S Building for decontamination by evaporation.

a. Facilities Description

As shown on figures 1 and 10 (drawings SK-2-21811 and SK-2-21813), French drains 216-A-22 and 216-A-28 would be abandoned. The lines entering these French drains would be rerouted to the 216-A3 crib line. A new 1000-gallon underground catch tank would be installed to intercept all flow to the A3 crib. After sampling, the tank would be pumped out, either to the A3 crib or to the existing truck pad for loading and shipment to the waste concentration system in 202-S Building. A new 3-inch line would be installed from the new tank to the truck loading pad. The contaminated waste would be trucked to the 200-W Area and transferred to the Redox Plant for concentration and clean-up prior to disposal.

b. Expected Results

Unmonitored discharges to the French drains would be discontinued, and volume and radioactivity inputs to the existing 216-A-3 crib would be accurately measured. Evaporation of nonstandard wastes would also reduce the radioactivity input to the ground.

c. Capital Costs

Installation	$ 35,000
Engineering	9,000
Contingency & Escalation	12,000
TOTAL (rounded)	$ 55,000

d. Increased Annual Operating Costs

Manpower	$ 2,800
Maintenance Supplies	1,300
Essential Materials	400
TOTAL	$ 4,500

Additional costs for transportation and evaporation of these wastes would be dependent on the volume to be handled. This volume is not presently known.

e. Schedule

(Months after Authorization)

Design		Construction	
Start	Finish	Start	Finish
1	6	2	12

18. Laboratory Wastes -- 222-S Laboratory

Approximately 100,000 gallons of liquid wastes, containing 3 curies of beta emitters, will be discharged to the 216-S-20 crib by the 222-S Laboratory during 1967. With the Redox Plant in use for concentration of some wastes, this stream may be simply routed to the Redox Plant for decontamination by evaporation.

a. Facilities Description

1) General

The 216-S-20 crib is presently used for disposal of low level wastes from the laboratories in 222-S Building. This crib would be abandoned. The low level waste would be transferred to the Redox D-12 concentrator for processing along with other wastes.

2) Routings

As shown on figure 2 (drawing SK-2-21820), piping modifications would be required in Building 219-S to route the low level waste from TK-102 to the Redox canyon, near tank D-8. An existing spare line from 219-S to the D-8 position would be used. Installations of two new jumpers would route the waste from the D-8 position to TK-D1. Existing routings are presently installed for jetting D-1 to D-13, the waste receiver for the D-12 concentrator.

b. Expected Results

Decontamination of this stream by evaporation in the Redox Plant would reduce the radioactivity to the ground by 3 curies per year. The 216-S-20 crib would no longer be required and could be abandoned.

c. Capital Costs

Installation	$ 7,000
Engineering	1,800
Contingency & Escalation	2,500
TOTAL (rounded)	$ 11,000

d. Increased Operating Costs

Evaporation (Steam and Electricity)	$ 5,000

e. Schedule

(Months after Authorization)

Design		Construction	
Start	Finish	Start	Finish
1	2	2	3

f. Alternative

Continue to discharge to the 216-S-20 crib.

19. Cooling Water Disposal — U Plant

Approximately 225 x 10^6 gallons of 224-U Building cooling water, containing an estimated 3 curies of total beta emitters, will be discharged to the 216-U-10 swamp in 1967. It is proposed that radiation monitoring, continuous proportional sampling, and volume measurement capability be installed on this stream.

a. Facilities Description

As shown on figure 3 (drawing SK-2-21812), detail II, and figure 2 (drawing SK-2-21820), a new sampling pit would be installed on the U-Plant cooling water disposal line which discharges to the 216-U-10 swamp. The cooling water is mainly from 224-U Building operations, but connections to the header are still in place from 221-U Building. Flow would be recorded and totalized. A proportional sampler would be installed to furnish a permanent record of any activity that

might be present. A radiation recorder alarm would also be installed to record and sound the alarm for any unusual situation.

b. Expected Results

This stream has an average radioactivity content of 0.1 MPC_w. The main function of this installation would be to warn of abnormal radioactivity content and to provide more accurate measurements of the volume discharged.

c. Capital Costs

Installation	$ 22,000
Engineering	5,000
Contingency & Escalation	7,500
TOTAL (rounded)	$ 35,000

d. Increased Annual Operating Costs

Manpower	$ 2,100
Maintenance Supplies	1,000
TOTAL	$ 3,100

e. Schedule

(Months after Authorization)

Design		Construction	
Start	Finish	Start	Finish
1	6	2	12

f. Alternative

Utilize existing sampling facilities and volume calculations.

20. Plutonium Reclamation Salt Wastes — 236-Z and 242-Z Buildings

An estimated 500,000 gallons of high salt waste, containing 7000 grams of plutonium, will be discharged to the 216-Z-1A crib in 1967. Facilities will be provided to collect and transfer this waste stream to underground storage for subsequent concentration by in-tank solidification or the 242-T evaporator. Until the proposed facilities can be provided, operation will continue as at present. A new crib will be constructed to replace crib 216-Z-1A and 216-Z-1A will be abandoned as a discharge site. The new crib, proposed designation 216-Z-18, will be considered

as an interim facility, pending adoption of the proposed in-tank retention scheme presented here. Independent of the above approaches, it is intended to pursue process and equipment improvements for reducing the plutonium losses to this waste stream.

a. Facilities Description

As shown on figure 2 (drawing SK-2-21820), a new 3-inch line would be installed from near 241-Z to the 244-TXR vault to intercept the high salt plutonium-bearing aqueous waste stream and route the stream to the TX tank farm. The existing line to 216-Z-1A crib would be blanked. The waste would be received in a decanter tank where any organics would be drawn off for neutralization and subsequent treatment (e.g., incineration after CCl_4 removal). The remaining aquous waste would be transferred to another tank for neutralization, and then pumped to a tank in the TX tank farm for storage. Ultimately, the aqueous wastes would be concentrated by in-tank solidification facilities or the 242-T waste evaporator.

b. Results Expected

Operation of the proposed retention facilities would eliminate the plutonium discharge to the ground from this source. It would also eliminate the discharge of high salt waste and organic wastes to the ground.

c. Capital Costs

Installation	$339,000
Engineering	84,000
Contingency & Escalation	120,000
TOTAL (rounded)	$540,000

d. Increased Annual Operating Costs

The increased annual cost for operating these facilities will amount to $83,000. These costs include direct labor plus pertinent adders and costs of material.

e. Schedule

(Months after Authorization)

Design		Construction	
Start	Finish	Start	Finish
1	12	3	24

f. Alternatives

1) Continue to construct new cribs for this stream and discharge to ground on a specific retention basis.

2) Tank truck this stream to the TK tank farm after the organic has been decanted and both portions neutralized.

3) Investigate methods for reducing plutonium losses from the processing operations to this stream. This is an area receiving continuing attention, and allied programs of investigation are under way by Research and Engineering personnel. The costs and time intervals for reducing the plutonium losses are indefinite at this time. The actual reduction of plutonium in this stream from these means must also be concluded as indefinite at this time.

21. Waste Waters — 234-5 Building

An estimated 4×10^6 gallons of process condensates, cooling waters, and vacuum jet water, containing 1200 grams of plutonium, will be discharged to the 216-Z-12 crib in 1967. It is proposed that this waste stream be routed to an existing underground storage tank for subsequent decontamination by evaporation in the Redox Plant, 242-T waste evaporator, or other installed waste evaporation facilities.

Pending adoption of this proposal, contaminated waste water will continue to be discharged to this crib. The plutonium concentration and volume of water will continue to be measured in this stream, and regardless of the final action with regard to this stream, it is intended to pursue process improvements and equipment for reducing the plutonium losses.

a. Facilities Description

As shown on figure 2 (drawing SK-2-21820), a new 3-inch line would be installed from near 241-Z to the TX tank farm to intercept the plutonium-bearing waste water stream and route the stream to an underground waste storage tank. Ultimately, the tank contents would be routed to the 242-T waste evaporator or to Redox facilities for decontamination by evaporation.

b. Results Expected

Decontamination of this stream by evaporation should eliminate the annual discharge of 1200 grams of plutonium to the ground.

c. Capital Costs

Installation	$120,000
Engineering	30,000
Contingency & Escalation	42,000
TOTAL (rounded)	$190,000

d. Increased Annual Operating Cost

The increased annual cost for operating these facilities would amount to $67,000. This cost includes direct labor, plus pertinent adders and costs of material.

e. Schedule

(Months after Authorization)

Design		Construction	
Start	Finish	Start	Finish
1	4	2	6

f. Alternatives

1) Continue cribbing of this stream.

2) Tank truck this stream to the TX tank farm or some other suitable facility.

3) Install an evaporator at Z Plant for this stream.

4) Investigate methods for reducing plutonium losses from the processing operations to this stream. This is an area receiving continuing attention, and allied programs of investigation are under way by Research and Engineering personnel. The costs and time intervals for reducing the plutonium losses are indefinite at this time. The actual reduction of plutonium in this stream from these means must also be concluded as indefinite at this time.

22. Cooling Waters -- 231-Z and 234-5-Z Buildings

The volume and plutonium content of these waste waters, routed to the 216-U-10 swamp via the 216-Z-11 ditch, is not accurately known. Instrumentation for alpha monitoring, continuous proportional sampling and volume measurement would be installed.

a. Facilities Description

As shown on figures 2 and 3 (drawings SK-2-21820 and SK-2-21812), detail II, a new sampling pit would be installed on the 234-5-Z cooling water line, and a new sampling pit would be installed on the 231-Z cooling water line, both of which discharge to the 216-U-11 ditch. Flows would be recorded and totalized. Proportional samplers would be insatlled to furnish permanent records of any activity that might be present. Radiation recorder alarms would also be installed for each facility to sound an audible alarm for any unusual situation. Tentatively, the 234-5-Z sampler pit would be installed southeast of the 234-5-Z Building, and the 231-Z sampler pit would be installed northeast of the 234-Z Building.

b. Results Expected

This scheme would provide facilities for monitoring streams with a low potential for containing radioactive contamination, and would also sound an alarm for any unusual condition detected. The alarm would initiate an investigation of the waste water streams for appropriate action.

The installation of the proposed facilities would establish a reliable record of the status of waste water discharges in these two streams to the 216-U-11 ditch.

c. Capitals Costs -- Each Installation

Installation	$ 38,000
Engineering	10,000
Contingency & Escalation	13,000
TOTAL (rounded)	$ 60,000

Since two installations are proposed, the total capital cost would be $120,000.

d. Increased Annual Operating Cost

The increased annual operating cost for the two facilities would be $17,000.

e. Schedule

(Months after Authorization)

Design		Construction	
Start	Finish	Start	Finish
1	6	2	12

f. Alternatives

1) Provide no facilities for measuring and recording these flows.

2) Discharge unmeasured water to cribs.

3) Install an ion exchange facility for this stream at Z Plant.

23. Hood, Sink, and Floor Drain Waste Water -- 231-Z Building

Hood, sink, and floor drain waste waters are presently discharged to the 216-Z-16 trench. A new crib, 216-Z-16, is being constructed for disposal of these wastes. It is estimated that 10×10^6 gallons of waste, containing 10 grams of plutonium, was discharged to the ground in this waste stream during 1967. It is proposed that alpha radiation monitoring, continuous proportional sampling, and volume measurement capability be installed on this stream. In addition, alpha radioactivity above a present limit would automatically sound an alarm, to alert building personnel of abnormal waste stream activity, and to divert the waste stream to an existing underground waste storage tank for retention and subsequent decontamination by evaporation. The source of radioactivity leakage to the waste stream would be determined and repairs made prior to returning the stream to the 216-Z-16 crib.

a. Facilities Description

As shown on figures 2 and 3 (drawings SK-2-21820 and SK-2-21812), detail II, a new, potentially contaminated, waste water sampling pit and a new diversion station would be installed. The sampling pit would be located close to the 231-Z Building, while the diversion station would be located out near the crib to allow some lag time for diversion of a detected contaminated stream. The diverted stream would be routed to TX tank farm via the new line from 241-Z for similar waste water. Uncontaminated waste water would continue to flow to the 216-Z-16 crib.

Flow through the sampling pit would be recorded, totalized, a proportional sample taken, and contamination level recorded. At a specified radiation limit, the radiation recorder-controller would automatically divert the stream to a new 3-inch line, which would be routed to the TX tank farm. Ultimately, the contaminated waste water would be transferred to the 242-T waste evaporator or Redox for decontamination by evaporation.

b. Results Expected

Installation and successful operation of the proposed monitoring and diversion facilities would reduce the risk of accidental discharge of gross quantities of plutonium to the ground. It should also provide a substantial reduction in the present annual plutonium discharge to ground in this waste stream (~ 10 grams plutonium).

c. Capital Costs

Installation	$ 60,000
Engineering	15,000
Contingency & Escalation	21,000
TOTAL (rounded)	$ 95,000

d. Increased Annual Operating Cost

The increased annual cost for operation of these facilities would be $15,000.

e. Schedule

(Months after Authorization)

Design		Construction	
Start	Finish	Start	Finish
1	8	2	16

f. Alternatives

1) Continue to construct new cribs for this stream, and discharge to ground on a specific retention basis.

2) Install an ion exchange facility at 231-Z Building.

D. Alternative Concentration Methods

In the preceding section C, it has been assumed that the concentration equipment in the Redox Plant would be used for reducing radioactivity in some streams presently of concern. This assumption has been made, since it produces minimum capital costs. If the Redox Plant should be required for other programs (e.g., reopened for full processing), the concentration capability of the Redox Plant could be provided in a number of ways at increased costs. Additional in-tank solidification units could be provided at costs expected to range from $1,000,000 to $2,000,000. Higher costs would be associated with treatment of the more chemically complex streams, such as the Purex ammonia scrubber waste.

Concentration capability could also be installed in U Plant. Room is available in U Plant for installing several concentrators. Studies indicate that installation of a single evaporator (20 gallons/minute boil-off) system in U Plant would cost $3,500,000 to $4,000,000. Additional evaporator systems could be added for an estimated additional cost of approximately $2,000,000 each.

E. Summary of Scheme I

A summary of scheme I, showing the waste streams involved; the proposed facilities and/or treatment for the streams; the associated capital costs; the increased annual operating costs of the treatment; and the estimated radioactivity released to the ground following utilization of scheme I facilities, is presented in table 9. Construction of the proposed facilities would proceed as rapidly as possible following funding and detailed design. Facilities for reducing the radioactivity in the low volume, high curie discharge or high plutonium discharge streams would be provided first. Utilization of existing Redox evaporation capability (8 to 10 million gallons per year) would provide a decontamination factor of approximately 100 on those waste water streams scheduled for evaporation there.

The extent of reduction of radioactive discharges to the ground achieved by diversion of streams to a collection facility would depend on available storage space and installed evaporation capability available (e.g., ITS 1 versus ITS 2, 242-T and B Plant). Reduction of chemical discharges to the ground (e.g., NO_3^-) would be a secondary result of the radioactivity reduction treatments (e.g., recycle of Purex process condensate, storage of 234-5 salt wastes, etc.).

F. Scheme I Hazards

1. Normal Operational Hazards

Operation of the existing and proposed facilities for treatment of the waste streams in scheme I should present no hazards that are not now encountered in the normal day-to-day operation of Atlantic Richfield Hanford Company facilities. Evaporation, concentration, transfer, and storage of radioactive waste streams; steam stripping for removal of trace organic solvents, operation of ion exchange columns are routine Chemical Processing Division processing operations. Evaporation of an ammoniacal waste stream (e.g., Purex NH_3 scrubber waste) is not currently done. However, this has been done in the Redox Plant previously. Operational hazards, including chemical safety and critical mass hazard considerations, are normally recognized and factored into the design of new facilities.

A formal hazards review is made to assure that significant hazards are recognized and operating safety is assured if operations are performed according to specifications, standards, and operating procedures.

2. Accidental Discharge Risks and Possibilities

It should be recognized that accidental discharges of radioactive wastes to the environs could still occur, even though the equipment proposed for scheme I was all in place. Failure of a radiation detection instrument to respond to increased radioactivity, or failure of the diversion system to operate, could result in abnormal discharges to the environs. Routine maintenance of the systems should provide reasonable assurance of operability. Should a radioactive solution be diverted and retained, capacity for retention of additional or subsequent diversions must be re-established, on a priority basis, to prevent radioactive discharge to the environs.

3. Long-Term Risks

The soils underlying a number of disposal sites contain a relatively large curie inventory of radioisotopes. The long-lived radioisotopes (cesium-137, strontium-90) are firmly held on the soil as a result of ion exchange. Continued discharge of the waste streams resulting from scheme I to these sites should have no significant adverse effect on the retention of these radioisotopes by the soil, provided the composition of the influent waste stream is not significantly changed. Discharges of wastes capable of leaching these radioisotopes from the soil will be avoided. The reduction of radioactivity in the waste streams discharged should provide a gradual reduction of radioactivity present in the ground and in the ground water beneath the site.

G. Scheme I Research and Development

1. Scheme I Technology

The treatments planned for reduction of radioactivity in the waste streams discharged are based on existing technology which has been reasonably well demonstrated. Evaporation to achieve decontamination has been routinely used with good success, particularly when efficient deentrainment is incorporated in the system. The removal of cesium-137 and strontium-90 by ion exchange has been successfully demonstrated in the laboratory, also, and on a semi-works scale. Performance of a zeolite ion exchange bed for cesium-137 removal from the ITS #1 condensate stream is now being tested with a prototype unit. Performance to date is very promising. Recycle of Purex process condensates appears to be technically feasible, but additional research and development efforts will be required to demonstrate the recycle scheme proposed.

2. Alternate Treatments

Research and development to improve the proposed treatments and/or to provide the technology for attractive alternates should be

continued. Electrodialysis, reverse osmosis, scavenging, etc., may provide the necessary decontamination of these waste streams at lower cost.

3. Analysis of Low Radioactive Waste Streams

Atlantic Richfield Hanford Company control laboratories have the capability to measure total alpha and total beta content of low level waste streams. Additional methods or improved methods for rapid determination of radioisotopes to 0.01 MPC_w, or less, are required.

4. Instrumentation and Alarms

The instrumental detection of total alpha activity and/or total beta or total gamma activity at MPC_w concentrations is not currently possible. Development of this instrumental capability will be required. Development work in this area should proceed immediately as funds are provided.

5. Research and Development Costs and Manpower Requirements

The development of low-level alpha and beta-gamma detection and monitoring instrumentation, and the development of analytical methods suitable for control laboratory measurement of radioactivity in low level waste streams may require reorientation of some contemplated research and development programs to focus on the selected scheme problem areas.

IV. SCHEME II -- SCHEME FOR REDUCING RADIOACTIVE CONCENTRATIONS OF LOW LEVEL AQUEOUS DISCHARGES TO LESS THAN DRINKING WATER LIMITS

A. Introduction

This scheme assumes that present treatment methods must be modified such that all liquid discharged to the environment does not exceed maximum permissible concentrations as set forth in Government standards. The plan of action would be directed toward implementation of facilities as soon as possible for treatment of waste streams which exceed the established standards. Such an approach would require a large capital outlay and expedient action if facilities are to be provided in the near future. The program would also be directed toward total resolution of the pollution problem associated with liquids released to the environs, with the exception of tritium, which is discussed in reference 5. Since this scheme is primarily concerned with the installation of facilities in a minimum of time, known technology for treatment of the many and varied waste streams must be available. The basis for the facilities studied in this scheme is additional evaporation and condensation, which appear to provide greater potential for decontamination of all waste liquids presently discharged to the ground.

This scheme also assumes the installation of facilities for the monitoring and containment of the large volumes of cooling water and steam condensates which could become contaminated through failure of heat exchange equipment, and which are presently discharged to swamps and/or ground. These liquid wastes would be collected, sampled, and released to the environs, only after assurance that the streams meet established standards. Any liquid waste which exceeds the established limits would be reworked through an existing plant or evaporated in the new facility. This course of action could necessitate a production plant shut-down until corrective measures are in place to reduce the potential for environmental contamination. The concentrated solutions which would be generated during the final evaporation cycles in the new facility would be stored in underground tanks and treated as high level waste.

B. Scheme II Discussion

1. Facilities

The primary facilities which were incorporated in this scheme include:

a. Monitoring and diverter stations consisting of radiation detection instrumentation, liquid sampling systems, flow measurement devices, and stream diverter systems.

b. Tankage for collection of liquid waste which are generated in production or service plants or diverted from the monitoring and diverter stations.

c. Retention basins for collections of cooling water and condensates for monitoring and auditing purposes prior to final disposal.

d. New U Plant evaporation facilities consisting of feed tankage, evaporators, condensers, concentrate receivers, waste tankage, and related services.

e. Associated auxiliaries consisting primarily of underground pipe lines for segregation and routing, and motive systems for transfer of waste streams.

Monitor and Diverter Station (See figure 11)

A monitor and diverter station would be installed in each effluent stream which flows continuously from a plant and could potentially become contaminated through failure of control or barrier systems. The typical station would include a radiation detection system, with associated instrumentation for transmitting a signal to a control center. Should radioactivity be detected, the diverter system would be activated, and the contaminated stream would be diverted to a catch tank for containment and isolation from normal disposal routes. The system would have sufficient time

lag from the time of detection to the diverter system to minimize the potential of contamination passing the diverter station. The station would also contain flow measuring instrumentation, along with a proportional sampler, to provide total qualitative and quantitative analysis of the stream for control and auditing purposes.

Tankage (See figure 11)

New underground tanks would be provided for receiving waste streams which would not meet established standards. These streams would be collected continuously and transferred to the evaporation facility for final treatment. The waste receiver tanks would be used for segregation and isolation of streams which may be more difficult to decontaminate, such as those containing tritium or ruthenium. The volume of the tanks would be sufficient to provide capability for collection of the normal streams and allow time for sampling and characterization of the waste prior to transfer to the evaporation facility. Additional space would also be provided for receiving waste generated throughout the various operating areas which may also require treatment through the evaporation facility. The tanks would be located and sized to minimize the number required for collection of the waste in the various areas.

Other waste collection tanks would be installed in the areas where low level wastes are generated and presently discharged to various cribs or French type drains. The primary source of these type wastes are laboratories and other service areas. These tanks would permit collection and transfer of the waste to the disposal facilities as required.

It was assumed that all low level waste streams which are now disposed of without quantative volume and radioactivity measurements would be collected in new tankage, sampled, and disposed of only after sufficient assurance is obtained that these streams do not exceed established limits. For this study, it was assumed that new tankage would be required. However, existing tanks may be available for certain services in the future. The utilization of existing tanks would be investigated if implementation of this course of action is warranted.

Retention Basins (See figure 11)

Retention basins, built of concrete, and having sufficient space for the collection of large volumes of cooling water and various condensate streams continuously, would be installed. These retention basins would provide the final monitoring point between the operating plants and final disposal to the environs. The basins would also provide assurance that failures of primary radiation detection and control systems would not permit uncontrolled release of contamination to the environs. Because of the

large volumes of water used for heat exchange throughout the operating plants, these basins would be required to hold several million gallons each. Parallel basins would be installed to permit complete filling, sampling, and dumping of the collected water on a controlled basis. If contaminated liquids reached the basins through abnormal circumstances, the liquids would be transferred back to the original plant through a rework system or evaporated in the new evaporation facility. The scheduling of large volumes of contaminated liquid from these basins, back through a decontamination process and additional clean-up of a basin prior to returning it to normal services, could impose severe operating limitations, however.

Evaporation Facilities (See figure 12)

Evaporation facilities would be installed in the existing U Plant facility, which is located in the 200-West Area. The plant is similar in design to the T and B Plants, and is presently being used only for storage of equipment and minor operating functions. Approximately 20 cells within the 221 canyon would be reactivated. The primary equipment which would be required consists of evaporators, feed tankage, condensers, concentrated waste collection tankage, process condensate disposal systems, off-gas treatment facilities, and related services and auxiliaries. The selection of the U Plant facility for reactivation recognizes the availability in the 200-West Area of most of the utilities necessary for large scale evaporation and condensation processes. An additional steam generating boiler would be required in the power house.

This study considered the installation of five separate evaporation and condensation systems in the 221 canyon. Each system would consist of a vessel for receiving and feed adjustment; a vessel for continuous feeding of the evaporator; an evaporator and condenser capable of transferring heat at a rate of approximately 50×10^6 Btu/hour; a concentrate receiving vessel; a process condensate disposal system, and related motive, control, building ventilation, utility, and service facilities. In addition, equipment would also be required for collection and/or treatment of the waste streams which are generated during the evaporation and condensation cycles. Two liquid waste streams which would be generated are of primary concern. One of the streams is the concentrate stream which would be stored and treated as high level waste. The other is the tritium-bearing stream which, for the purpose of this study, would be disposed to the ground. Waste collection tanks would be installed for collection of these two streams in the plant for monitoring purposes prior to final disposal. The other waste streams, such as cooling water and condensates, would be disposed of through retention basins, then to swamps, as proposed for the other operating plants.

The noncondensable gaseous waste generated during the evaporation cycles would also require treatment. Equipment consisting of absorbers, scrubbers, heaters, filters, and motive systems would be installed. These gaseous waste streams would also be monitored to insure compliance with established standards prior to discharge to the environs.

The facilities studied are shown on figures 11 and 12 (drawings SK-2-21664 and SK-2-21665). The normal processing requirements are primarily associated with the process condensate streams which originate in the processing plants and are presently discharged to the ground. These streams, in general, do not meet the existing MPC limits. The contamination present also varies in the many streams. In addition to the normal waste streams generated in the processing plants, liquid wastes originate in the various service and related operating facilities. It is also anticipated that liquid waste would be received from other Atomic Energy Commission contractors for treatment through the new facilities. This characterization of the existing streams has been in progress, and it appears that a single evaporation and condensation cycle would be sufficient to decontaminate the anticipated waste to MPC limits. Should additional steps be required, it would be possible to utilize two or more evaporator systems in series. The processing operations would be continuous. Therefore, capability would be provided for maximum collection, along with parallel systems, to insure maximum operating continuity in case of abnormal conditions.

2. Cost and Expenditure Pattern

The total estimated capital cost of this scheme is $22,000,000, and it would be expended as follows:

Fiscal Year	Dollars In Millions
1969	8.8
1970	8.8
1971	4.4

The total estimated capital cost of the U Plant and tank farm facilities, respectively, is $12,000,000 and $10,000,000. Summary of costs for these facilities is included on tables 10 and 11. The schedule for completion of the proposed work would be 36 months after authorization to proceed with detail design efforts.

Operating

The annual estimated incremental operating cost for the new facilities is $5,000,000 and would start in fiscal year 1972.

C. Scheme II Hazards

Hazards associated with operation of the proposed facilities in this scheme are comparable to those existing in the present Hanford Separation Facilities. The collection and transfer of the various waste streams would be very similar to the operations which have been controlled successfully in the tank farm area. The operations of the U Plant facilities would be similar to various concentration and condensation functions which are performed routinely in the separations plants. The waste streams proposed for treatment through the facilities, by definition, should contain low level radioactivity. Therefore, those hazards associated with the handling of large quantities of fission products should be greatly minimized. No additional hazards would be anticipated as a result of the proposed processing functions. The design of the facilities would comply with established standards and specifications for plants which perform operating functions associated with the handling of radioactive materials.

D. Scheme II Research and Development

The research and development effort in support of the evaporation process would be nominal, since existing technology is available for such processes. Certain development efforts would, however, be required for definition of monitoring systems capable of measuring to MPC levels. In addition, investigations of alternate methods (such as ion exchange) for treatment of some streams would be required. As mentioned earlier, tritium disposal, and the research and development efforts connected with its disposal, is not considered in the cost presented.

V. REFERENCES

1. ISO-98 (Unclassified), "Radioactive Contamination in Liquid Wastes Discharged to Ground at the Separations Facilities Through December, 1965," B. J. McMurray, February 15, 1966.

2. ISO-698 (Unclassified), "Radioactive Contamination in Liquid Wastes Discharged to Ground at the Separations Facilities Through December, 1966," B. J. McMurray, February 15, 1967.

3. HW-79174 (Unclassified), "Progress in Treatment of a Radioactive Condensate Waste," J. M. Skarpelos, October, 1963.

4. BNWL-180 (Unclassified), "Adsorption of Trace Ions from Intermediate Level Radioactive Wastes by Ion Exchange," B. W. Mercer, January, 1966.

5. ISO-842 (Unclassified), "Study of Land Requirements," R. J. Sloat, May 8, 1967.

6. ISO-981 (Secret), "Hanford High Level Waste Management Revaluation Study," P. W. Smith and R. E. Tomlinson, August 31, 1967.

7. RL-39 (Unclassified), "Richland Five-Year O2 Research and Development Program, Waste Management," Richland Operations Office, et al, June 1, 1967.

8. ISO-994 (Unclassified), "Reduction of Plutonium Losses to Ground by Continuous Organic Stripping," L. M. Knights, July 31, 1967.

9. ARH-20 (Unclassified), "Increased Plutonium and Americium Recovery by Continuous Solvent Extraction in the Waste Treatment Facility," C. A. Lorenzen and R. F. Speakman, September 11, 1967.

10. Letter, D. E. Larson to G. L. Hanson, "Definition of B Plant Low Level Wastes for Waste Management Program Revaluation Study," June 8, 1967.

11. Letter, G. L. Hanson to B. W. Mercer and G. L. Richardson, "Isochem Waste Management Program — Revaluation Study," May 1, 1967.

12. Letter, G. L. Richardson to G. L. Hanson, "Low Level Waste Management," July 12, 1967.

TABLE 1

VOLUME AND TYPE OF AQUEOUS RADIOACTIVE WASTE DISPOSED TO ENVIRONMENT

(1945 Through 1966)

Disposal Site	Waste Type	Volume * (n x 10^9 gallons)	Strontium-90 (Ci)	Cesium-137 (Ci)	Total Beta Emitters (Ci)
Crib	High salt	0.24	19,130	7,740	1,059,354
	Lab and process	0.66	9,983	4,997	894,648
	Condensate	5.4	1,446	2,246	172,288
		6.30	30,559	14,983	2,126,290
Swamps	Cooling water	98.0	634	500	112,794
Specific Retention	Organic	0.0021	32	158	96,573
	Lab and process	0.0061	1,893	1,607	153,284
	High salt	0.026	9,876	30,433	670,440
		0.0342	11,801	32,198	920,297

* Includes waste water from all sources.

UNCLASSIFIED

TABLE 2

SUMMARY OF RADIOACTIVE WASTES DISCHARGED TO SWAMPS AND DITCHES WITHIN THE CHEMICAL SEPARATIONS AREA CONTROL ZONE THROUGH 1966

Disposal Site	Placed In Use	Removed from Service	Volume ($n \times 10^6$ g)	Uranium (lbs)	Plutonium (grams)	^{90}Sr (Ci)	^{137}Cs (Ci)	^{106}Ru (Ci)	Total Beta Emitters (Ci)
216-A 25 Gable Mountain Swamp	12/57		29,000	760	344	400	300	500	93,300
216-B 3 B Swamp and Ditches	4/45		18,000	450	195	80	90	2200	15,000
216-C 9 Semiworks Swamp	6/53		260	< 0.1	< 0.1	5	< 0.1	5	50
216-N 1 200 North N-Swamp	/44	6/52	250	10	1	5	5	5	500
216-N 4 200 North P-Swamp	/44	6/52	250	10	1	5	5	5	500
216-N 6 200 North R-Swamp	/44	6/52	250	10	1	5	5	5	500
216-S 10 Redox Chem Sewer Ditch	2/54	5/54	0.053	5	< 0.1	1	1	10	20
216-S 11 Redox Chem Sewer Ditch	5/54		640	50	< 0.1	1	1	10	50

UNCLASSIFIED

TABLE 2

Disposal Site	Placed In Use	Removed from Service	Volume ($n \times 10^6$ g)	Uranium (lbs)	Plutonium (grams)	^{90}Sr (Ci)	^{137}Cs (Ci)	^{106}Ru (Ci)	Total Beta Emitters (Ci)
216-S 16 Redox Swamp #2	4/54		9600	6930	362	75	50	200	960
216-S 17 Redox Swamp #1	3/52	4/54	1700	300	3	40	30	50	1,100
216-S 19 222-S Lab Swamp	1/52		630	230	20	1	1	5	22
216-T- 1 221-T Ditch	/45		1.2	10	< 0.1	< 0.1	< 0.1	1	5
216-T 4 T Plant Swamp	3/47		10,000	1500	< 0.1	1	1.5	100	110
216-U 9 U Swamp Overflow Ditch	3/52	3/54	Not used						
216-U 10 U Swamp and Ditches	3/52		27,000	2900	8000	15	10	300	677
216-U 11 U Swamp Overflow Pond	3/52		Not used						

UNCLASSIFIED

TABLE 3

SUMMARY OF RADIOACTIVE WASTES DISCHARGED TO CRIBS WITHIN THE CHEMICAL SEPARATIONS AREA CONTROL ZONE THROUGH 1966

Disposal Site	Placed In Use	Removed from Service	Volume ($n \times 10^6$ gallons)	Uranium (lbs)	Plutonium (grams)	^{90}Sr (Ci)	^{137}Cs (Ci)	^{106}Ru (Ci)	^{60}Co (Ci)	Total Beta Emitters (Ci)
216-A 3 203-A Silica Gel Wastes	3/56		0.74	3,700	0.2	< 0.1	< 0.1	350	< 0.1	490
216-A 4 Lab and Stack Drain	12/55	12/58	1.64	880	140	10	15	400	1	270
216-A 5 Process Condensate	11/55	11/61	476	580	65	90	25	150	110	3,405
216-A 6 Steam Condensate	11/55	1/61	740	350	21	80	200	200	< 0.1	4,000
216-A 7 241-A-152 Box Drain	11/55	7/59	0.063	15	1	1	5	30	< 0.1	20
216-A 8 Tank Fram Condensate	11/55	5/58	291	810	49	50	600	500	< 0.1	10,000
216-A 9 N-Reactor Wastes & Acid Fractionator	3/56		370	0.5	0.5	25	10	50	0.1	160

UNCLASSIFIED

TABLE 3

Disposal Site	Placed In Use	Removed from Service	Volume (n x 10^6 gallons)	Uranium (lbs)	Plutonium (grams)	^{90}Sr (Ci)	^{137}Cs (Ci)	^{106}Ru (Ci)	^{60}Co (Ci)	Total Beta Emitters (Ci)
216-A 10 Process Condensate	11/61		528	370	173	63	46	2,000	170	120,000
216-A 21 Ammonia Scrubber & Lab Wastes	12/58	6/65	23.2	430	150	15	150	200	10	2,800
216-A 24 Tank Fram Cond.	5/58		211	110	5	6.4	500	400	0.5	4,900
216-A 27 Lab, Scrubber & Stack Drain	8.65		3.96	77	74	4	6	25	0.12	403
216-A 30 Steam Condensate	1/61		687	52	50	120	200	150	15	4,700
216-A 36B Ammonia Scrubber Wastes	3/66		1.11	110	70	60	50	200	5	4,200
216-A 37 Steam Condensate	Not used									
216-A 38 Process Conden.	Not used									
216-B 7 224-B Wastes and 5-6 Cell Drain	9.46	/58	13.2	400	4,300	5600	100	600	1	10,100

TABLE 3

Disposal Site	Placed In Use	Removed from Service	Volume ($n \times 10^6$ Gallons)	Uranium (lbs)	Plutonium (grams)	^{90}Sr (Ci)	^{137}Cs (Ci)	^{106}Ru (Ci)	^{60}Co (Ci)	Total Beta Emitters (Ci)
216-B 8 224-B, 5-6, & 2nd Cycle Wastes	/45	/52	7.13	100	30	15	50	50	1	710
216-B 9 5-6 & 2nd Cycle Wastes	8.48	7/51	9.51	100	170	15	10	100	< 0.1	7,800
216-B 10 222-B & 292-B Wastes	12/49	/58	2.64	20	10	5	1	10	< 0.1	50
216-B 11 242-B Condensate	12/51	11/54	7.93	30	4	5	50	50	< 0.1	39
216-B 12 U Plant Conden. & B Plant Cond.	11/52		100.4	46,000	370	70	60	250	< 0.1	2,600
216-B 14 U Plant Scavenged Waste	1/56	2/56	2.3	480	25	400	250	59,000	5	140,000
216-B 15 U Plant Scavenged Waste	4/56	12/57	1.66	230	5	200	200	22,000	5	69,000
216-B 16 U Plant Scavenged Waste	4/56	8.56	1.48	710	10	700	650	13,000	5	54,000

TABLE 3

Disposal Site	Placed In Use	Removed from Service	Volume ($n \times 10^6$ Gallons)	Uranium (lbs)	Plutonium (grams)	^{90}Sr (Ci)	^{137}Cs (Ci)	^{106}Ru (Ci)	^{60}Co (Ci)	Total Beta Emitters (Ci)
216-B-17 Tank Farm Scavenged Wastes	1/56	1/56	0.90	780	10	160	220	250	1	2,000
216-B 18 U Plant Scavenged Wastes	3/56	4/56	2.25	520	10	190	250	19,000	5	51,000
216-B 19 U Plant and Tank Farm Scavenged Waste	2/57	10/57	1.69	400	10	200	270	5,100	5	9,300
216-B 43 U Plant Scavenged Waste	11/54	11/54	0.56	30	0.5	1400	300	50	1	3,200
216-B 44 U Plant Scavenged Waste	12/54	3/55	1.48	5	15	2900	700	5,500	5	22,000
216-B 45 U Plant Scavenged Waste	4/55	6/55	1.30	15	10	2800	1500	17,000	5	53,000
216-B 46 U Plant Scavenged Wastes	9/55	12/55	1.77	420	20	1500	200	28,000	5	120,000
216-B 47 U Plant Scavenged Wastes	9/55	9/55	0.98	15	5	620	150	19,000	1	45,000

TABLE 3

Disposal Site	Placed In Use	Removed from Service	Volume (n x 10^6 Gallons)	Uranium (lbs)	Plutonium (grams)	^{90}Sr (Ci)	^{137}Cs (Ci)	^{106}Ru (Ci)	^{60}Co (Ci)	Total Beta Emitters (Ci)
216-B 48 U Plant Scavenged Wastes	11/55	7/57	1.08	5	5	1300	450	6,800	1	61,000
216-B 49 U Plant Scavenged Wastes	11/55	12/55	1.77	700	15	2700	410	24,000	5	110,000
216-B 50 First ITS Wastes	1/65		2.91	< 0.1	< 0.1	< 0.1	57	10	< 0.1	91
216-B 55 B Plant Process Condensate	Not used.									
216-B 57 Second ITS Waste	Not used.									
216-C 1 201-C Process Condensate	1/53	6/57	8.72	650	8	200	< 0.1	400	< 0.1	11,000
216-C 3 271-C Chemical Wastes	1/53	3/54	1.32	100	1	20	< 0.1	10	< 0.1	200
216-C 5 201-C High Salt Wastes	3/55	6/55	0.010	120	1	10	< 0.1	5	< 0.1	94
216-C 7 209-E Critical Mass Lab	/59		0.011	< 0.1	1	< 0.1	< 0.1	1	< 0.1	20

TABLE 3

Disposal Site	Placed In Use	Removed from Service	Volume (n x 10^6 Gallons)	Uranium (lbs)	Plutonium (grams)	^{90}Sr (Ci)	^{137}Cs (Ci)	^{106}Ru (Ci)	^{60}Co (Ci)	Total Beta Emitters (Ci)
216-C 10 Strontium Process Condensate	11/64		0.211	< 0.1	< 0.1	47	< 0.1	1	< 0.1	58
216-S 1 & 2 Redox Process Condensate	1/52	1/56	42.3	5,000	1,200	3000	2500	3,000	10	750,000
216-S 3 241-S TK-101 & 104 Condensate	8.53	8.53	1.11	840	0.5	1	50	50	1	270
216-S 5 Steam Condensate	3/54	3/57	1083	600	580	130	60	30	< 0.1	960
216-S 6 Steam Condensate	11/54		1083	570	470	393	192	100	< 0.1	2,800
216-S 7 Process Condensate	1/56	7.65	103	5,700	440	3100	1470	1,500	25	281,000
216-S 9 Process Condensate	7/65		7.66	57	9	140	450	150	5	9,120
216-S 12 291-S Stack Wash	7/54	7/54	0.053	< 0.1	< 0.1	1	1	5	< 0.1	10
216-S 18 Steam Cleaning Pit	10/54	10/54	< 0.026	< 0.1	< 0.1	< 0.1	< 0.1	< 0.1	< 0.1	< 0.1
216-S 20 222-S & 300-A Lab Wastes	3/52		34.3	77	170	45	110	100	1.4	6,620

TABLE 3

Disposal Site	Placed In Use	Removed from Service	Volume ($n \times 10^6$ Gallons)	Uranium (lbs)	Plutonium (grams)	^{90}Sr (Ci)	^{137}Cs (Ci)	^{106}Ru (Ci)	^{60}Co (Ci)	Total Beta Emitters (Ci)
216-S 21 241-SX Condensate	11/54		21.1	9	2	26	150	40	0.04	540
216-S 22 293-S Caustic Scrubber	/57		< 0.026	< 0.1	< 0.1	1	1	5	< 0.1	10
216-T 6 224-T 5 and 6 Wastes	8/46	6/51	11.9	50	390	360	300	600	5	18,000
216-T 7 224-T, 5-6, & Second Cycle	4/48	/56	29.1	20	130	60	50	100	1	3,100
216-T 8 222-T Lab Wastes	4/50	/56	0.132	10	5	1	1	5	< 0.1	100
216-T 9 Equipment Decontamination	2/51	3/54	0.053	< 0.1	< 0.1	5	5	20	< 0.1	50
216-T 10 Equipment Decontamination	6/51	3/54	0.053	< 0.1	< 0.1	5	5	20	< 0.1	50
216-T 11 Equipment Decontamination	6/51	3/54	0.053	< 0.1	< 0.1	5	5	20	< 0.1	50
216-T 13 Equipment Decontamination	6/54		0.026	< 0.1	< 0.1	1	1	40	< 0.1	60

TABLE 3

Disposal Site	Placed In Use	Removed from Service	Volume ($n \times 10^6$ Gallons)	Uranium (lbs)	Plutonium (grams)	^{90}Sr (Ci)	^{137}Cs (Ci)	^{106}Ru (Ci)	^{60}Co (Ci)	Total Beta Emitters (Ci)
216-T 19 224-T, 242-T, 5-6, Second Cycle Waste Evaporation	9/51		22.2	10	14	60	350	1,000	1	2,030
216-T 26 Scavenged Wastes	8/55	11/56	3.17	330	59	670	170	2,600	1	29,000
216-T 27 Decontamination, Scavenged Wastes, 300 Area	9/65	11/65	1.90	16	13	140	100	1,500	1	2,000
216-T 28 Decontamination & 300 Area	10/63	9/65	3.17	340	70	200	350	1,000	5	58,500
216-T 32 224-T Wastes	4/48	6/52	7.66	50	3,200	30	25	50	1	1,500
216-T 33 2706-T Bldg. Wastes	1/63		0.502	10	5	0.5	0.5	10	1	50
216-T 34 300 Area Lab Wastes	5/66		3.70	7	105	320	270	100	5	25,000
216-T 35 300 Area Lab Wastes	Not used.									

TABLE 4

SUMMARY OF RADIOACTIVE WASTES DISCHARGED TO SPECIFIC RETENTION CRIBS WITHIN THE CHEMICAL SEPARATIONS CONTROL ZONE THROUGH 1966

Disposal Site	Placed In Use	Removed from Service	Volume ($n \times 10^6$ Gallons)	Uranium (lbs)	Plutonium (grams)	^{90}Sr (Ci)	^{137}Cs (Ci)	^{60}Co (Ci)	^{106}Ru (Ci)	Beta Emitters (Ci)
216-A 1 Start-Up Wastes	11/55	12/55	0.026	340	< 0.1	< 0.1	< 0.1	<0.1	< 0.1	1
216-A 2 Purex Organic	5/56	1/63	0.042	91	130	2	3	1	150	590
216-A 18 Start-Up Wastes	11/55	12/55	0.129	3,100	< 0.1	< 0.1	< 0.1	<0.1	< 0.1	10
216-A 19 Start-Up Wastes	11/55	12/55	0.291	86,000	< 0.1	< 0.1	< 0.1	<0.1	< 0.1	1
216-A 20 Start-Up Wastes	11/55	12/55	0.254	890	< 0.1	< 0.1	< 0.1	<0.1	< 0.1	1
216-A 31 Purex Organic	1/63		0.008	65	9	2	150	0.1	95,000	95,000
216-A 36A Ammonid Scrubber Wastes	9/65	3/66	0.291	320	80	1800	1500	10	3,000	147,100
216-B 20-34 U Plant & TK Farm Scavenged	8/56	10/57	18.8	8,600	63	5600	7100	84	190,000	600,000
216-B 35-36 First Cycle Supernatant	2/54	4/54	0.793	72	2	720	1200	<0.1	700	2,600

TABLE 4

Disposal Site	Placed In Use	Removed from Service	Volume ($n \times 10^6$ Gallons)	Uranium (lbs)	Plutonium (grams)	^{90}Sr (Ci)	^{137}Cs (Ci)	^{60}Co (Ci)	^{106}Ru (Ci)	Beta Emitters (Ci)
216-B 37 Evaporator Bottoms	8/54	9/54	1.14	8	2	16	3100	1	500	3,200
216-B 38-41 First Cycle Supernatant	12/53	11/54	1.58	200	4	2200	2200	<0.1	1,000	5,200
216-B 42 U Plant Scavenged Waste	2/55	3/55	0.396	1,500	10	1100	96	10	1,500	4,800
216-B 52 Scavenged Waste	12/57	1/58	0.845	66	19	11	340	4.5	8,600	15,000
216-B 53A PRTR Waste	10/65	11/65	0.145	50	100	< 0.1	< 0.1	0.5	5	50
216-B 53B 300 Area Wastes	11/62	3/63	0.004	20	5	10	7	1	4	15
216-B 54 300 Area Wastes	3/63	/65	0.264	20	5	0.1	0.1	0.1	10	2,400
216-B 58 300 Area Wastes	/65		0.018	20	5	10	7	1	5	20
216-C 4 276-C Organic Waste	7/55	5/65	0.045	7,500	1	28	< 0.1	<0.1	15	120
216-C 6 241-CX Condensate	9/55	9/64	0.140	< 0.1	< 0.1	65	< 0.1	<0.1	25	2,000

TABLE 4

Disposal Site	Placed In Use	Removed from Service	Volume (n x 10^6 Gallons)	Uranium (lbs)	Plutonium (grams)	^{90}Sr (Ci)	^{137}Cs (Ci)	^{60}Co (Ci)	^{106}Ru (Ci)	Beta Emitters (Ci)
216-S 8 Start-Up Wastes	11/51	2/52	2.64	430	2	1	12	<0.1	50	1,500
216-S 13 Redox Organic	2/51		1.32	200	8	0.04	5	<0.1	100	630
216-S 12 291-S Stack Wash	7/54	7/54	0.018	11	1	1	1	<0.1	1	5
216-S 14 Organic Start-Up Wastes	1/52	1/52	0.018	1	< 0.1	< 0.1	< 0.1	<0.1	< 0.1	1
216-T 12 Retention Basin Sludge	11/54	11/54	0.132	100	1	5	10	2	10	50
216-T 15 Second Cycle Supernatant	5/55	5/55	0.687	10	180	1	70	5	30	130
216-T 14-17 First Cycle Supernatant	1/54	6/54	1.00	220	3	38	2400	5	50	3,300
216-T 18 Scavenged Wastes	11/53	11/53	0.264	60	1,800	7	57	10	200	840
216-T 21-24 First Cycle Supernatant	6/54	8/54	1.32	27	6	140	5000	5	150	20,000

TABLE 4

Disposal Site	Placed In Use	Removed from Service	Volume (n x 10^6 Gallons)	Uranium (lbs)	Plutonium (grams)	^{90}Sr (Ci)	^{137}Cs (Ci)	^{60}Co (Ci)	^{106}Ru (Ci)	Beta Emitters (Ci)
216-T 25 First Cycle Bottoms	9/54	9/54	0.793	2	1	4	8900	<0.1	100	15,000
216-T 30 TX-154 Diversion Box	/53	/53	0.005	10	1	40	40	1	50	500
216-U 5-6 Cold Start-Up Uranium	/52	/52	1.19	1,600	< 0.1	< 0.1	< 0.1	<0.1	< 0.1	1
216-U 15 Contaminated Solvent	/57	/57	0.018	5	< 0.1	0.1	0.1	<0.1	1	7
216-Z 1A a 236 & 242 Wastes	6/64	5/66	0.502	< 0.1	10,000	< 0.1	< 0.1	<0.1	100	150
216-Z 1A b 236 & 242-Z Wastes	5/66		0.254	< 0.1	4,000	< 0.1	< 0.1	<0.1	50	75

TABLE 5

VOLUME AND AMOUNT OF RADIOACTIVITY DISCHARGED TO CRIBS AND SWAMPS ON A YEAR-TO-YEAR BASIS

Year	Total Beta Emitters Discharged (Ci)		Volume Discharged ($n \times 10^6$ gallons)	
	Cribs	Swamps	Cribs	Swamps
From start-up through 1952	30,000	1,500	390	10,000
1953	110,000	100	480	5,500
1954	160,000	150	410	5,500
1955	350,000	150	760	6,000
1956	1,050,000	200	740	6,000
1957	630,000	200	560	6,500
1958	230,000	2,600	470	6,500
1959	15,000	100	360	6,500
1960	10,000	75	340	6,500
1961	15,000	7,000	260	6,500
1962	65,000	3,000	330	6,500
1963	40,000	2,000	270	6,500
1964	155,000	96,000	320	6,500
1965	140,000	1,200	330	6,500
1966	100,000	1,000	280	6,500
	3,100,000	112,575	6300	98,000

TABLE 6

ESTIMATED DISCHARGES TO SUB-SURFACE CRIBS DURING 1965

Crib	Source	Volume Millions of Gallons	Curies Gross Beta	Curies ^{137}Cs	Curies ^{90}Sr	Grams Plutonium
216-A 3	Purex silica gel waste	0.01	< 1	< 1	< 1	-
216-A 10	Purex process condensate	103	14,300	< 4	1.5	45
216-A 21	Purex lab and scrubber waste	2.3	212	2.4	0.1	68
216-A 24	Purex tank farm condensate	3.7	35	18.8	0.3	-
216-A 29	Purex caustic scrubber waste	1.7	150	0.6	1.0	51
216-A 30	Purex steam condensate	127	232	< 2	0.4	2
216-A 36	Purex dissolver scrubber waste	0.13	84,500	380	425	13
216-B 7	B Plant construction waste	0.6	2,000	8	2000	< 1
216-B 50	In-tank solidification condensate	1.5	4	3.6	-	-
216-C-10	Strontium semiworks process condensate	0.08	25	-	25.1	-
216-S 6	Redox steam condensate	57.9	132	91.8	19.0	1
216-S 7	Redox process condensate	4.4	4,290	101	102	2
216-S 9	Redox process condensate	2.6	1,500	85.3	46.0	2
216-S 13	Redox organic wastes	0.1	258	2.4	< 1	< 1
216-S 20	Redox laboratory wastes	0.08	< 1	< 1	< 1	< 1
216-S 21	Redox tank farm condensate	3.2	174	29.5	1.6	< 1

TABLE 6

Crib	Source	Volume Millions of Gallons	Curies Gross Beta	Curies ^{137}Cs	Curies ^{90}Sr	Grams Plutonium
216-T 27	Battelle Northwest Laboratory waste	11.0	1,990	-	-	13
216-T 28	Battelle Northwest Laboratory	3.5	30,400	-	-	30
216-U 12	UO_3 Plant concentrator condensate	3.6	773	-	104	-
216-Z 1A	Plutonium Reclamation waste	0.2	-	-	-	1640
216-Z 7	Battelle Northwest Laboratory waste	0.5	209	-	-	< 1
216-Z 12	Weapons laboratory and process waste	4.4	-	-	-	1860
		331.2	141,000	732	2730	3730

TABLE 7

ESTIMATED DISCHARGES TO SUB-SURFACE CRIBS DURING 1966

Crib	Liquid Source	Volume n x 10^6 Gallons	Total Beta Emitters (Ci)	^{137}Cs (Ci)	^{90}Sr (Ci)	Pu (Grams)
216-A 3	Purex silica gel	0.003	-	-	-	-
216-A 5	Purex process condensate (Oct.)	1.02	4.6	-	-	1
216-A 10	Purex process condensate	75.6	2,907	23.3	5.9	27
216-A 8	Purex tank farm condensate	0.97	8.5	13.9	-	-
216-A 24	Purex tank farm condensate	1.75	36.4	24.8	0.01	-
216-A 27	Purex laboratory and miscellaneous	2.15	253.3	4.6	4.1	23
216-A 30	Purex coil and jacket steam condensate	107.3	128	2.7	1.0	1
216-A 7	Purex organic	0.065	-	0.3	0.02	0.6
216-A 31	Purex organic	0.002	55.3	-	-	9
216-A36A	Purex dissolver scrubber	0.153	62,600	285	250	68
216-A36B	Purex dissolver scrubber	1.10	5,883	-	-	67
216-B 7	B Plant construction	0.246	102.2	10.8	110	-
216-B 50	B Plant ITS	1.40	86.8	53.3	-	-
216-C 10	Semiworks	0.132	22.1	22.1	-	-
216-S 6	Redox steam condensate and cooling water	61.8	573	10.6	51.2	4.3
216-S 9	Redox process condensate	4.88	7,610	362	93.8	7.4

TABLE 7

Crib	Liquid Source	Volume n x 10^6 Gallons	Total Beta Emitters (Ci)	^{137}Cs (Ci)	^{90}Sr (Ci)	Pu (Grams)
216-S 13	Redox organic	0.029	74	0.4	0.002	0.1
216-S 20	Redox laboratory	0.063	0.51	0.08	0.014	0.01
216-S 21	Redox tank farm condensate	3.55	138	22.2	4.86	0.05
216-T 28	T Plant decontamination	0.166	155	-	-	1
216-T 34	Battelle Northwest Laboratory (340 Bldg.)	2.63	12,396	-	-	107
216-Z 7	Battelle Northwest Laboratory (340 Bldg.)	1.17	1,674	-	-	3.4
216-U 1&2	224-U Plant	0.011	-	-	-	-
216-U 12	224-U Plant process condensate	2.70	0.12	-	-	-
216-Z 1&2	Plutonium Reclamation	0.026	-	-	-	101
216-Z 1A	Plutonium Reclamation	0.338	-	-	-	1585
216-Z 12	234-5 Building	3.90	-	-	-	767
216-T 19	242-T process and steam condensate	8.80	28.3	17.8	-	-
	TOTAL (rounded)	282	95,000	854	521	2773

TABLE 8

ESTIMATED DISCHARGES TO CRIBS AND SWAMPS IN 1967

Site	Waste Stream	Volume n x 10^6 Gallons	Total Beta Emitters (Ci)	^{60}Co (Ci)	^{90}Sr (Ci)	^{106}Ru (Ci)	^{137}Cs (Ci)	Pu (Grams)
216-A 25	Cooling water - Gable Mountain swamp	3000	300	<0.1	2	100	1.5	20
216-B 3	Cooling water - B swamp and ditches	1000	150	<0.1	1	50	0.75	10
216-C 9	Cooling water - Semiwords & Critical Mass Lab swamp	10	1	<0.1	<0.1	< 0.1	<0.1	< 0.1
216-S 16	Cooling water - Redox Plant swamp	25	50	<0.1	1	5	1	0.5
216-S 19	Vent cooling water - Redox lab (swamp)	10	5	<0.1	0.1	1	0.2	< 0.1
216-T 1	271-T and Battelle Northwest Laboratory water (ditch)	1	1	<0.1	<0.1	< 0.1	<0.1	< 0.1
216-T 4	242-T cooling water (swamp)	200	25	4	2	5	4	0.2
216-U 10	Z & U Plant cooling water (swamps and ditches)	1000	50	<0.1	1	10	1	1
216-Z 17	231-Z Building waste water (ditch)	10	50	<0.1	<0.1	< 0.1	<0.1	10
	TOTAL to swamps and ditches	5256	587	4	7	171	8.5	42

TABLE 8

Site	Waste Stream	Volume n x 10^6 Gallons	Total Beta Emitters (Ci)	^{60}Co (Ci)	^{90}Sr (Ci)	^{106}Ru (Ci)	^{137}Cs (Ci)	Pu (Grams)
216-A 31	Purex organic waste (crib)	0	0	0	0	0	0	0
216-B 56	B Plant organic waste (crib)	0	0	0	0	0	0	0
216-B 58	Battelle Northwest Laboratory liquid waste (trench)	0.3	80	1	1	2	1	1
216-B 59	B Plant emergency	0	0	0	0	0	0	0
216-Z 1Ac	242-Z and 236-Z wastes (crib)	0.5	1	0.1	0.1	0.1	0.1	7000
216-A 3	Purex silica gel	0	0	0	0	0	0	0
216-A 8	Purex tank farm condensate (crib)	7	50	0.1	1	5	35	0.1
216-A 9	N-Reactor decontamination (crib)	0.1	2	0.1	0.1	0.1	0.1	0.1
216-A 10	Purex process condensate (crib)	85	2000	2	6	50	4	15
216-A 27	Purex lab & miscellaneous (crib)	1	150	0.1	0.4	5	0.4	6
216-A 6 & A 30	Purex steam condensate (crib)	100	450	0.1	3	20	4	10
216-A 36B	Purex ammonia scrubber (crib)	1.5	6000	5	25	50	10	10
216-B 12	B Plant construction water & process condensate (crib)	1.0	500	0.1	2	0.1	4	3

TABLE 8

Site	Waste Stream	Volume n x 10^6 Gallons	Total Beta Emitters (Ci)	^{60}Co (Ci)	^{90}Sr (Ci)	^{106}Ru (Ci)	^{137}Cs (Ci)	Pu (Grams)
216-B 50	ITS condensate (crib)	3	20	0.1	0.1	4	10	0.1
216-B 55	B Plant steam condensate (crib)	2.0	5	<0.1	0.2	< 0.1	0.2	< 0.1
216-C 7	Critical Mass Laboratory waste (crib)	0.01	< 0.1	<0.1	<0.1	< 0.1	<0.1	0.1
216-S 9	Redox process condensate (crib)	2.0	4000	0.5	20	1200	70	50
216-S 20	Redox lab waste (crib)	0.1	3	0.1	0.2	2	0.2	0.2
216-S 21	241-SX tank farm condensate (crib)	3	100	0.1	25	1	20	0.1
216-T 19	242-T waste evaporator condensate (crib)	7	10	0.1	0.1	1	4	0.1
216-T 34	Battelle Northwest Laboratory waste - 300 Area (crib)	0.9	1100	6	20	150	35	1
216-T 35	Battelle Northwest Laboratory waste - 300 Area (crib)	2	1500	6	20	250	30	50
216-T 36	Special Services decontamination waste (crib)	0.3	150	0.5	30	110	12	12
216-U 12	UO_3 Plant process condensate (crib)	3.5	0.1	0.1	0.1	0.1	0.1	0.1
216-Z 12	234-5 Plant waste (crib)	4	2	0.1	0.1	0.1	0.1	1200
	TOTAL (rounded) to below ground sites	224	16,000	22	154	1850	241	8360

TABLE 9

Waste Stream	Estimated Volume (Gallons/Year)	Estimated Total Beta (Ci) Discharged (1967)	Proposed Treatment	Capital Cost	Increased Annual Operating Cost	Estimated Radioactive Discharge Following Treatment
1. Purex NH_3 scrubber waste (Aluminum clad and zirconium clad fuels)	3.2×10^6	6000	Collect and store in existing underground tank; transfer to Redox for decontamination by evaporation on a campaign basis.	$ 435,000	$ 99,000	50
2. Battelle Northwest Lab waste, 300 Area,	4×10^6	2600	Decontamination by evaporation in Redox	None - use existing facilities	173,000	250
Atlantic Richfield Hanford Company Special Services waste, Douglas	1×10^6	150				
United Nuclear decontamination waste	0.5×10^6	2				
3. Purex process condensate	85×10^6	2000	Recycle for reuse in Purex process. Excess to crib. Collect, store, and decontaminate a portion of excess, not meeting crib limits, by evaporation.	430,000	150,000	20
4. Purex steam condensate	100×10^6	450	Improved sampling and monitoring with crib discharge. Divert, collect, and store out of limit condensate for decontamination by evaporation.	160,000	63,000	10
5. Purex Laboratory and miscellaneous wastes	1×10^6	150	Segregate; noncontaminated waste water to swamp, decontaminate remainder by evaporation	16,000	18,000	5
6. 241-A and AX tank farm condensate	2.5×10^6	50 (35 ^{137}Cs)	Steam strip for organic removal; ion exchange for cesium-137 and strontium 90 removal.	880,000	164,500	< 5
7. B Plant process and steam condensates	18×10^6	500	Monitoring and diversion of out of limit condensate for removal of cesium-137 and strontium-90 by ion exchange.	770,000	99,000	15

TABLE 9

Waste Stream	Estimated Volume (Gallons/ Year)	Estimated Total Beta (Ci) Discharged (1967)	Proposed Treatment	Capital Cost	Increased Annual Operating Cost	Estimated Radioactive Discharge Following Treatment
8. 242-T steam and process condensates	11.5×10^6	10 (4 ^{137}Cs)	Ion exchange process condensate stream for cesium-137 removal. Divert and ion exchange steam condensate when necessary.	$ 240,000	$ 48,000	< 1
9. ITS No. 2 process condensate	7.5×10^6	-	Steam strip for organic removal; ion exchange for cesium-137 removal.	820,000	171,000	< 5
10. Purex cooling water	3000×10^6	300	Radiation monitoring for detection of in-leakage of radioactivity. Shut down and repair to correct the problem.	35,000	3,000	30
11. Purex acid fractionator condensate	8×10^6	150	Recycle to vacuum acid fractionator. Excess to process condensate recycle system.	13,000	5,000	< 1
12. B Plant cooling water and steam condensate	900×10^6	-	Divert contaminated stream to a collection tank via the open trench. Process waste water via ITS No. 2	125,000	Variable	10
13. Purex chemical sewer	225×10^6	-	Radiation monitoring for detection of in-leakage of radioactivity. Shut down and repair to correct the problem.	35,000	3,000	< 1
14. 241-AR vault cooling water and steam condensates.	90×10^6	-	Radiation monitoring for detection of radioactive in-leakage. Divert, collect, and decontaminate by evaporation in ITS No. 2 as required.	145,000	Variable	< 1
15. Purex crane maintenance facility waste	Unknown	Unknown	Provide collection and sampling facilities. Transfer contaminated wastes to Redox for decontamination by evaporation.	44,000	4,000	-
16. Purex French drains	Unknown	Unknown	Provide radiation detection probes and alarms	16,000	28,000	-

TABLE 9

Waste Stream	Estimated Volume (Gallons/ Year)	Estimated Total Beta (Ci) Discharged (1967)	Proposed Treatment	Capital Cost	Increased Annual Operating Cost	Estimated Radioactive Discharge Following Treatment
17. 203-A facility French drains	Unknown	Unknown	Provide collection and sampling facilities. Transfer contaminated wastes to Redox for decontamination by evaporation.	$ 55,000	$ 4,500	-
18. 222-S laboratory wastes	0.1×10^6	3	Transfer to Redox for decontamination by evaporation.	6,000	5,000	None
19. U-Plant cooling water disposal	225×10^6	3	Provide monitoring, sampling, and volume measurement capability on waste waters discharged by 224-U Building to 216-U 10 swamp.	35,000	3,000	3
20. 234-5 high salt wastes	0.5×10^6	1 + 7000 grams Pu	Provide routings and facilities for segregation of organic and aqueous streams; interim storage of both streams is provided in existing tankage. Aqueous wastes concentrated in 242-T facility and bottoms stored.	540,000	83,000	< 7 grams Pu
21. 234-5 cooling water, process condensates, etc.	4×10^8	2 + 1200 grams Pu	Provide a routing to existing 241-TX storage tanks. Decontaminate by evaporation in 242-T, Redox, or 221-U facilities.	190,000	67,000	< 2 grams Pu
22. 231-Z and 234-5 waste	400×10^6	5 + 1 gram Pu	Provide monitoring, sampling, and volume measurement capability on waste waters discharged from 231-Z and 234-5 Buildings to open ditch.	120,000	17,000	< 1 gram Pu
23. 231-Z hood, sink, and floor drain waste	10×10^6	5 + 10 grams Pu	Provide monitoring and diversion of alpha contaminated wastes to an existing TX farm tank. Evaporate diverted wastes in 242-T, Redox, or 221-U facilities.	95,000	15,000	< 1 gram Pu
			TOTAL	$5,205,000	$1,223,000	400 Ci Beta <10 grams Pu

TABLE 10

SCHEME II

CAPITAL INVESTMENT ASSOCIATED WITH U PLANT FACILITIES

Item	Cost
Equipment and ventilation	$ 4,500,000
Piping	1,100,000
Instrumentation	450,000
Utilities and services	250,000
Structural modifications	650,000
Additional boiler (200 West Power House)	500,000
Sub-total	$ 7,450,000
Engineering @ 25%	1,860,000
Contingency and escalation @ 36%	2,690,000
TOTAL (rounded)	$12,000,000

TABLE 11

SCHEME II

COST SUMMARY OF OUTSIDE LINES AND STORAGE FACILITIES

Item		Number	Cost
Retention basin	6×10^6 Gals.	6	$ 1,968,000
Retention basin	5×10^5 Gals.	2	128,000
Tanks	5×10^5 Gals.	2	200,000
Tanks	2.5×10^5 Gals.	2	114,000
Tanks	10^5 Gals.	2	64,000
Tanks	5×10^4 Gals.	3	60,000
Pipe lines			3,100,000
Monitor and diverter stations			224,000
Utilities and services			342,000
Sub-total			$ 6,200,000
Engineering @ 25%			1,550,000
Contingency and escalation @ 36%			2,250,000
TOTAL (rounded)			$10,000,000

TABLE 12

MANPOWER

U Plant	
Supervision	9
Specialists	10
Operators and Radiation Monitors	40
Maintenance	40
Analytical (equivalent)	10
	109
Tank Farm	
Supervision	6
Operators	12
Radiation Monitors	12
Maintenance	8
Analytical	4
	42

TABLE 12-A

OPERATING COST

(Dollars in Thousands)	Total Cost	Total Cost Plus Contingency 30%
U Plant Manpower	$1 102	$1 433
Tank Farm Manpower	463	602
Maintenance and Analytical Supplies	300	390
Indirect Support	313	407
Steam and Electricity	2 384	2 384 *
Cooling Water	12	16
Total Operating Cost	$4 574	$5 232
Rounded		$5 000

* No contingency added.

ARH - 231
PAGE A. 88

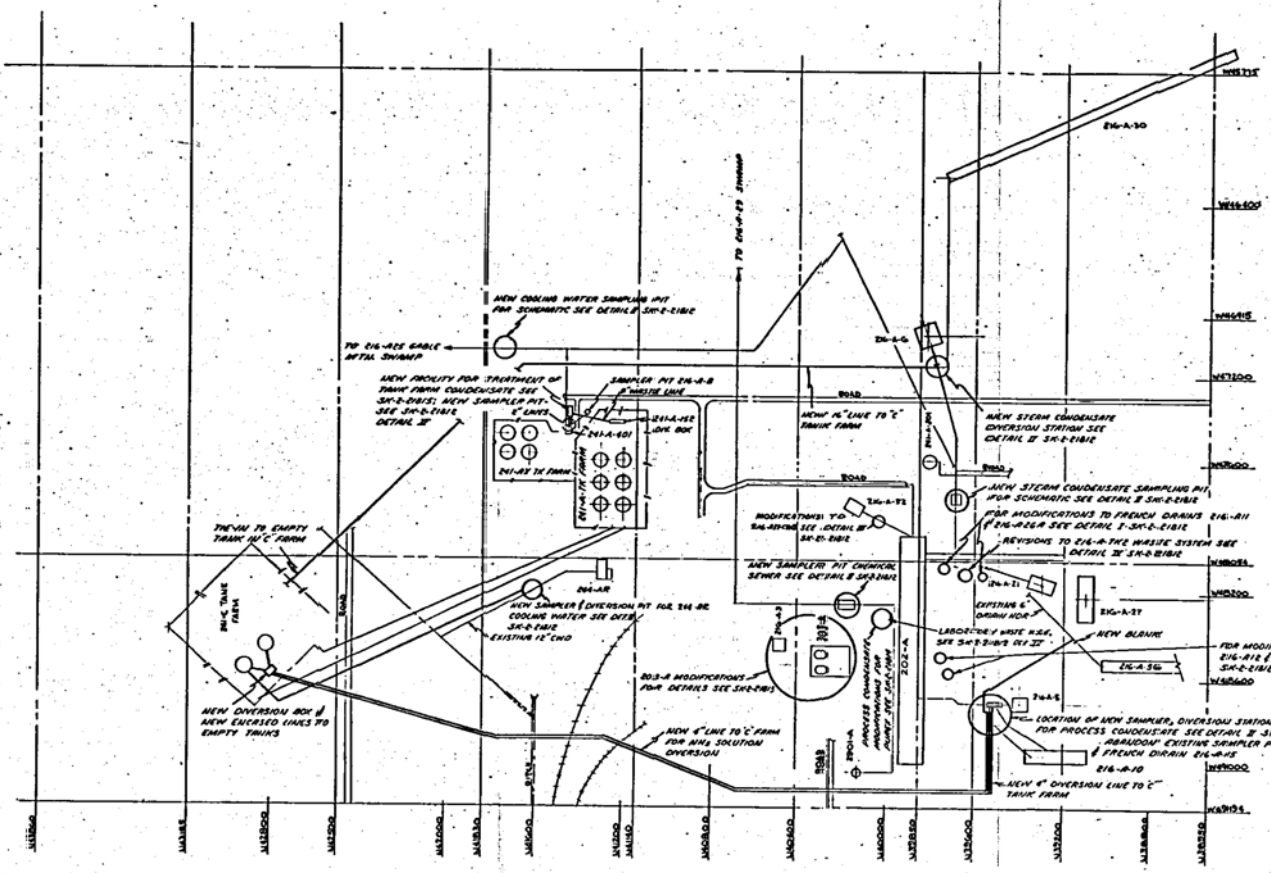

LEGEND
—— EXISTING
—— NEW

GENERAL NOTE
1. ALL NEW UNDERGROUND LINES TO BE STAINLESS STEEL, ENCASED.

APPENDIX "A"
FIGURE - 1

REFERENCE DRAWINGS	REVISIONS				
SHEET USED ON	DRAWING STATUS				

U. S. ATOMIC ENERGY COMMISSION
RICHLAND OPERATIONS OFFICE
ISOCHEM INC.
LOW LEVEL WASTE MODIFICATIONS PUREX AREA
WASTE MANAGEMENT STUDY
SK-2-21811

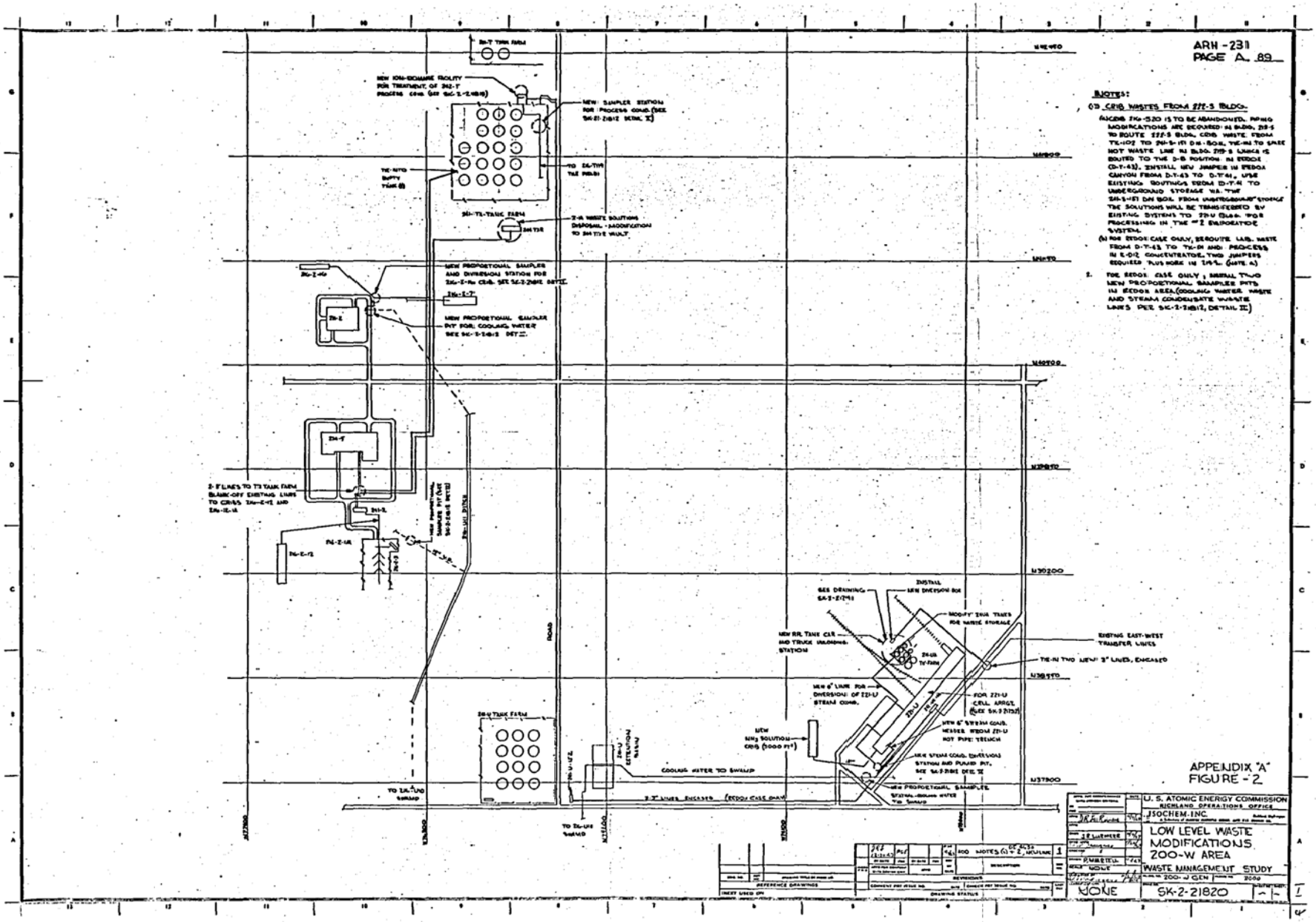
ARH-231
PAGE A-89
NOTES:
(1) CRIB WASTES FROM 221-S BLDG.
ACCOR. 2W-520 IS TO BE ABANDONED. PIPING MODIFICATIONS ARE REQUIRED IN BLDG. 219-S TO REROUTE 221-S BLDG. CRIB WASTE FROM TE-102 TO 241-S-151 DIS. BOX. TIE-IN TO SAME HOT WASTE LINE IN BLDG. 219-S UNDER IS ROUTED TO THE 2-B POSITION IN REDOX (D-T-43). INSTALL NEW JUMPER IN REDOX CANYON FROM D-T-43 TO D-T-41, USE EXISTING ROUTINGS FROM D-T-41 TO UNDERGROUND STORAGE VIA THE 241-U-151 DIS BOX. FROM UNDERGROUND STORAGE THE SOLUTIONS WILL BE TRANSFERRED BY EXISTING SYSTEMS TO 221-U BLDG. FOR PROCESSING IN THE #2 EVAPORATOR SYSTEM.
(A) FOR REDOX CASE ONLY, REROUTE LAB. WASTE FROM D-T-43 TO TE-01 AND PROCESS IN E-012 CONCENTRATOR. TWO JUMPERS REQUIRED PLUS WORK IN 291-S. (NOTE 4)
2. FOR REDOX CASE ONLY, INSTALL TWO NEW PROPORTIONAL SAMPLER PITS IN REDOX AREA. (COOLING WATER WASTE AND STEAM CONDENSATE WASTE LINES PER SK-2-21812, DETAIL II)
NEW ION-EXCHANGE FACILITY FOR TREATMENT OF 241-T PROCESS COND. (SEE SK-2-21819)
NEW SAMPLER STATION FOR PROCESS COND. (SEE SK-2-21812 DETAIL I)
TO 241-TY-TANK FARM
TE-101 TO EMPTY TANK (B)
241-TX-TANK FARM
2-IN WASTE SOLUTIONS DISPOSAL - MODIFICATION TO 241-TX-VAULT
NEW PROPORTIONAL SAMPLER AND DIVERSION STATION FOR 241-T-104 CRIB. SEE SK-2-21812 DETAIL II
NEW PROPORTIONAL SAMPLER PIT FOR COOLING WATER SEE SK-2-21815 DET. II
2-8" LINES TO T3 TANK FARM BLANK-OFF EXISTING LINES TO CRIBS 241-E-12 AND 241-E-14
241-T
241-E-12
241-E-14
241-U TANK FARM
TO 241-U-151 SWALE
TO 241-U-151 SWALE
COOLING WATER TO SWALE
2-3" LINES ENCASED (REDOX CASE ONLY)
ROAD
SECTION
SECTION
SECTION
SECTION
SECTION
SEE DRAINING SK-2-21791
INSTALL NEW DIVERSION BOX
MODIFY 241U TANKS FOR WASTE STORAGE
NEW RR TANK CAR AND TRUCK UNLOADING STATION
EXISTING EAST-WEST TRANSFER LINES
TIE-IN TWO NEW 3" LINES, ENCASED
NEW 6" LINE FOR DIVERSION OF 221-U STEAM COND.
FOR 221-U CELL ARRGT. (SEE SK-2-21521)
NEW 6" STEAM COND. HEADER FROM 221-U HOT PIPE TRENCH
NEW NH3 SOLUTION CRIB (5000 ft²)
NEW STEAM COND. DIVERSION STATION AND PUMPED PIT. SEE SK-2-21812 DET. II
NEW PROPORTIONAL SAMPLER STEAM-COOLING WATER TO SWALE
APPENDIX "A"
FIGURE - 2
U. S. ATOMIC ENERGY COMMISSION
RICHLAND OPERATIONS OFFICE
JSOCHEM, INC.
LOW LEVEL WASTE MODIFICATIONS
200-W AREA
WASTE MANAGEMENT STUDY
NONE
SK-2-21820
I

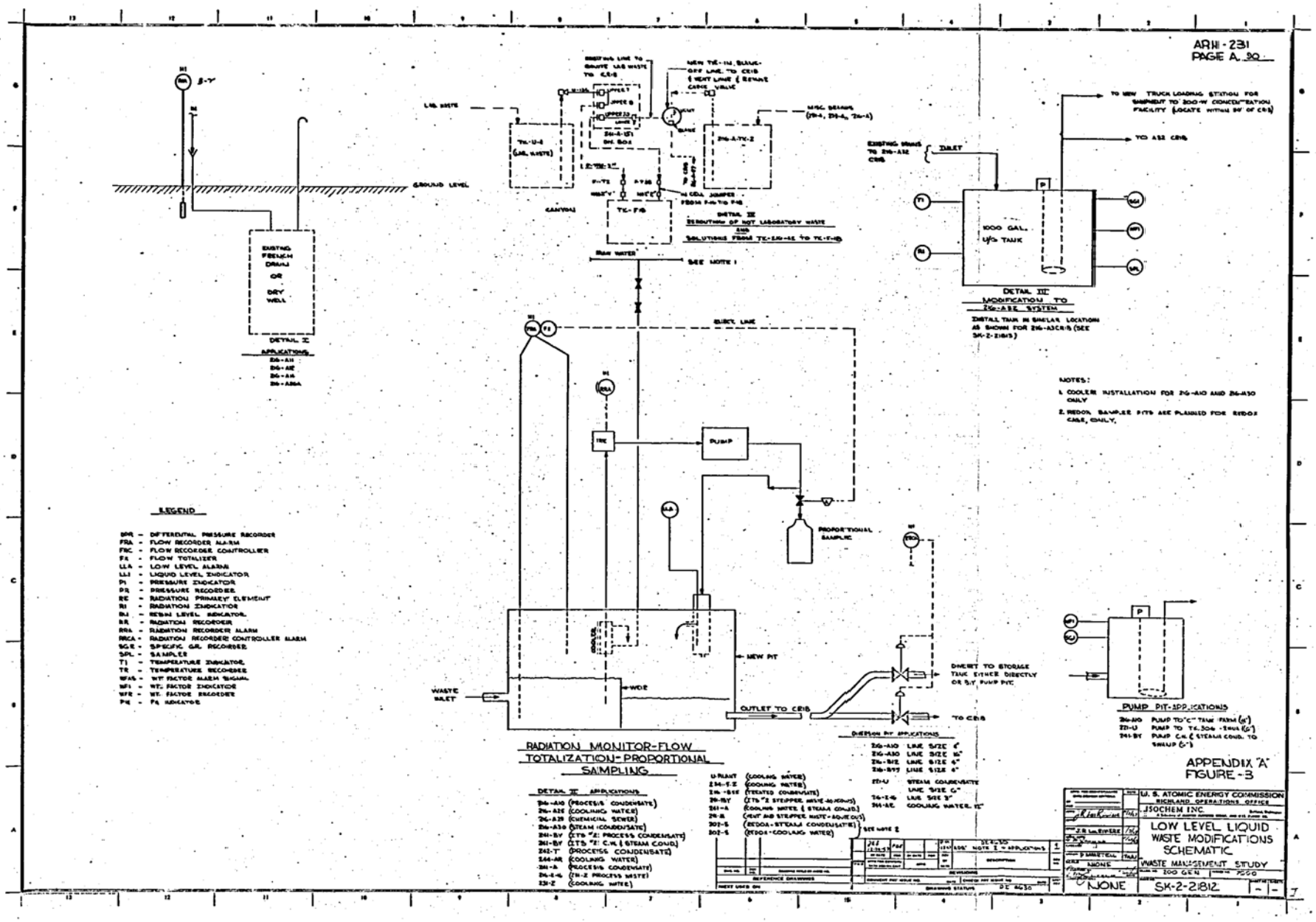
ARH-231
PAGE A 90
LIQ. WASTE
GROUND LEVEL
EXISTING FRENCH DRAIN OR DRY WELL
DETAIL I
APPLICATIONS
TO NEW TRUCK LOADING STATION FOR SHIPMENT TO 200-W CONCENTRATION FACILITY (LOCATE WITHIN 50' OF CRIB)
TO A32 CRIB
EXISTING DRAIN TO 216-A32 CRIB
INLET
1000 GAL. U/G TANK
DETAIL III
MODIFICATION TO 216-A32 SYSTEM
INSTALL TANK IN SIMILAR LOCATION AS SHOWN FOR 216-A30 CRIB (SEE SK-2-21813)
DETAIL II
DEMOLITION OF HOT LABORATORY WASTE AND SOLUTIONS FROM TK-2-W-12 TO TK-F-10
RAW WATER
SEE NOTE 1
DIRECT LINE
PUMP
PROPORTIONAL SAMPLING
NEW PIT
WEIR
WASTE INLET
OUTLET TO CRIB
DIVERT TO STORAGE TANK EITHER DIRECTLY OR BY PUMP PIT
TO CRIB
DIVERSION PIT APPLICATIONS
NOTES:
1. COOLER INSTALLATION FOR 216-A10 AND 216-A30 ONLY
2. REDOX SAMPLER PITS ARE PLANNED FOR REDOX CAGE, ONLY.
LEGEND
DPR - DIFFERENTIAL PRESSURE RECORDER
FRA - FLOW RECORDER ALARM
FRC - FLOW RECORDER CONTROLLER
FI - FLOW TOTALIZER
LLA - LOW LEVEL ALARM
LLI - LIQUID LEVEL INDICATOR
PI - PRESSURE INDICATOR
PR - PRESSURE RECORDER
RE - RADIATION PRIMARY ELEMENT
RI - RADIATION INDICATOR
RLI - RESIN LEVEL INDICATOR
RR - RADIATION RECORDER
RRA - RADIATION RECORDER ALARM
RRCA - RADIATION RECORDER CONTROLLER ALARM
SGR - SPECIFIC GR. RECORDER
SPL - SAMPLER
TI - TEMPERATURE INDICATOR
TR - TEMPERATURE RECORDER
WFAS - WT. FACTOR ALARM SIGNAL
WFI - WT. FACTOR INDICATOR
WFR - WT. FACTOR RECORDER
PH - PH INDICATOR
RADIATION MONITOR-FLOW TOTALIZATION-PROPORTIONAL SAMPLING
DETAIL IV APPLICATIONS
U-PLANT (COOLING WATER)
(PROCESS CONDENSATE)
(COOLING WATER)
(CHEMICAL SEWER)
(STEAM CONDENSATE)
(PROCESS CONDENSATE)
(COOLING WATER)
(PROCESS CONDENSATE)
(COOLING WATER)
(PROCESS WASTE)
(COOLING WATER)
APPENDIX "A"
FIGURE-3
U. S. ATOMIC ENERGY COMMISSION
RICHLAND OPERATIONS OFFICE
J.SOCHEM INC.
LOW LEVEL LIQUID WASTE MODIFICATIONS SCHEMATIC
WASTE MANAGEMENT STUDY
NONE
SK-2-21812

ARH - 231
PAGE A. 91

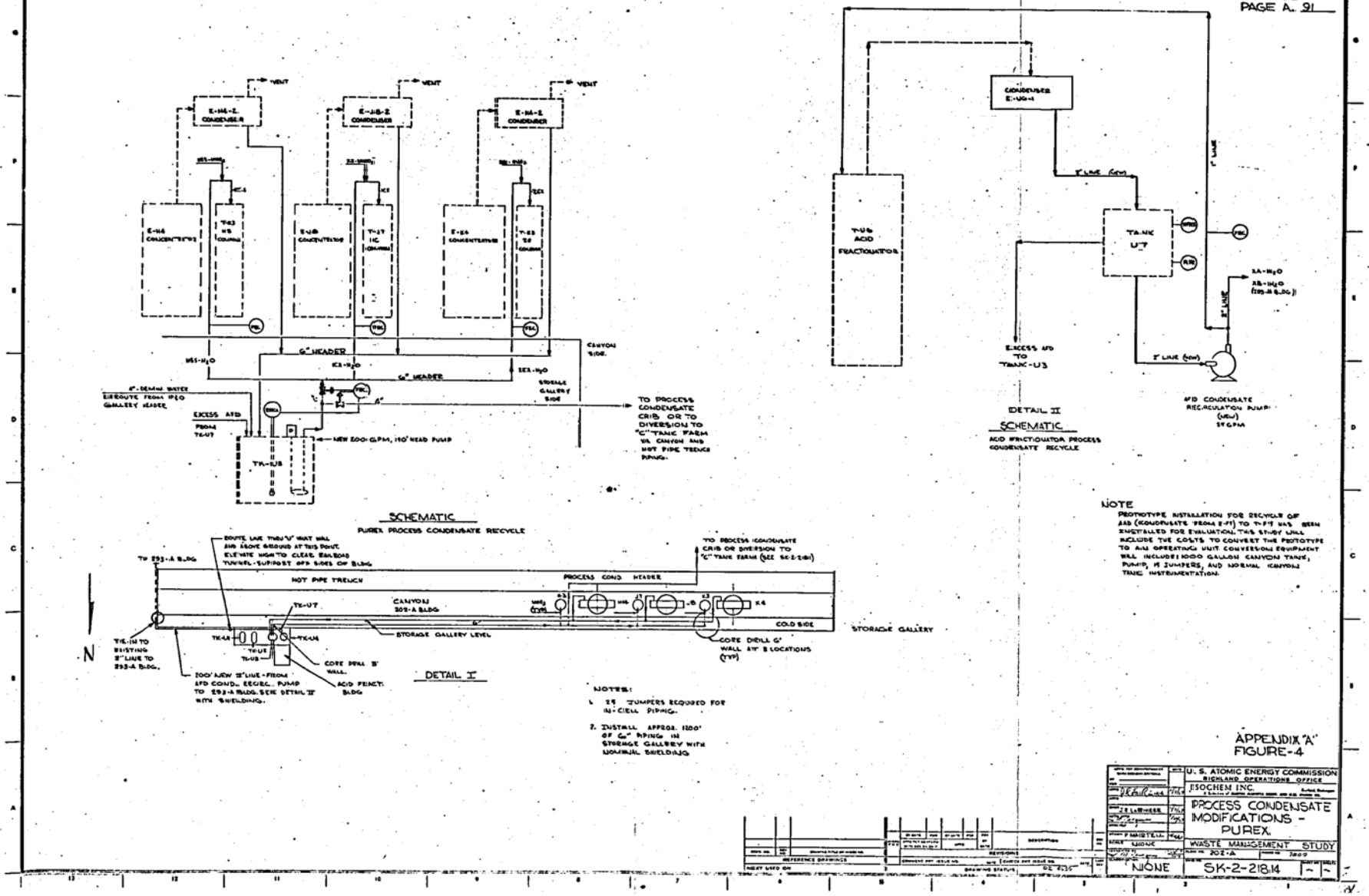

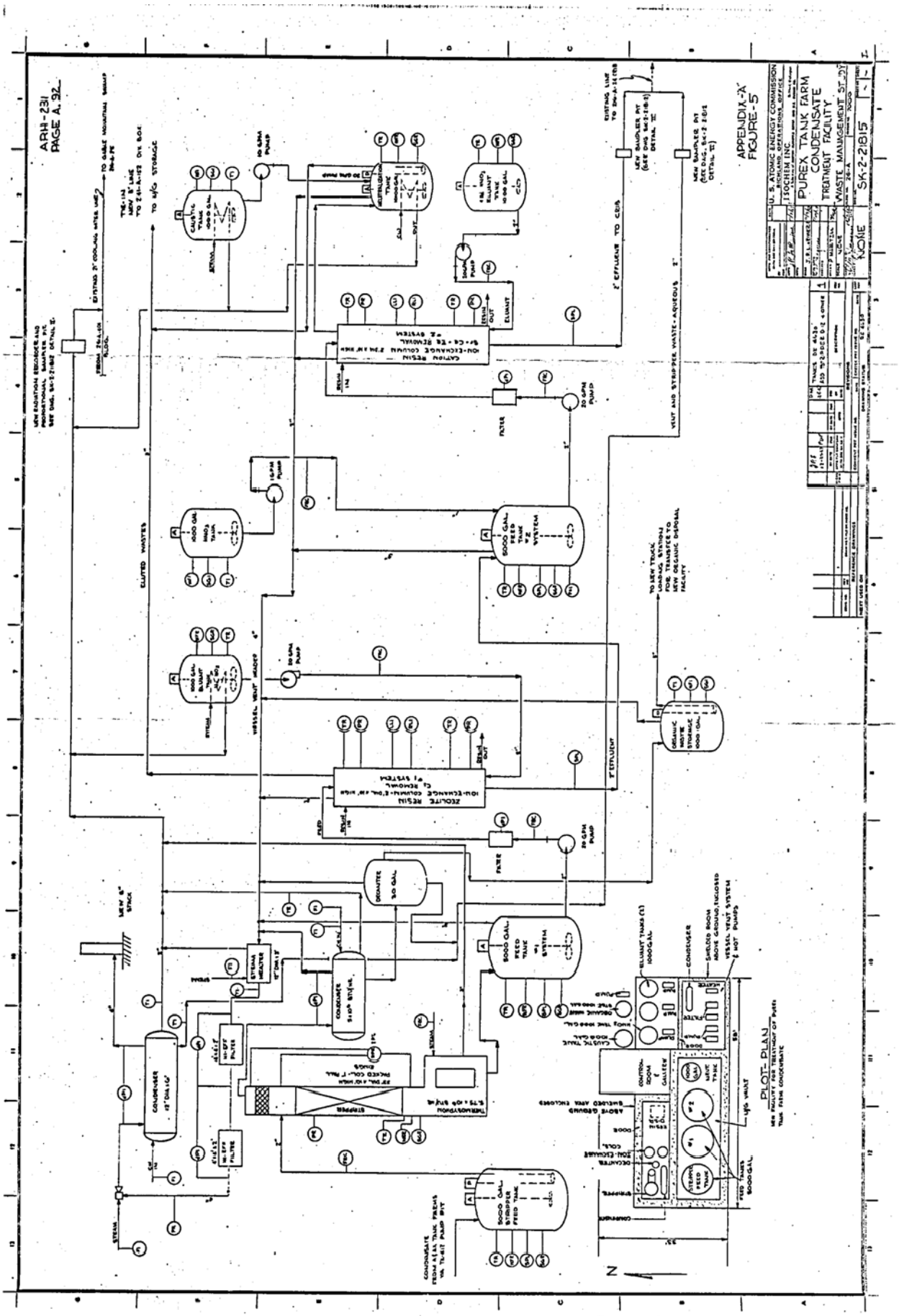
ARH-231
PAGE A.32
APPENDIX-"A"
FIGURE-5
U. S. ATOMIC ENERGY COMMISSION
RICHLAND, OPERATIONS OFFICE
I. S. O. TOPICAL INC.
PUREX TANK FARM
CONDENSATE
TREATMENT FACILITY
WASTE MANAGEMENT ST-201
SK-2-21815
NONE
PLOT PLAN
NEW FACILITY FOR TREATMENT OF PUREX
TANK FARM CONDENSATE
CAMPBELL RESIN
ION-EXCHANGE COLUMN
Sr-Cs-Ce REMOVAL
#2 SYSTEM
ZEOLITE RESIN
ION-EXCHANGE COLUMN
Cs REMOVAL
#1 SYSTEM
ELUTED WASTES
VENT AND STRIP-PER. WASTE-AQUEOUS
2" EFFLUENT TO CDB
2" EFFLUENT
TO NEW TRUCK
LOADING STATION
FOR TRANSFER TO
NEW ORGANIC DISPOSAL
FACILITY
ORGANIC
WASTE
STORAGE
6000 GAL.
FEED
TANK
#2
SYSTEM
6000 GAL.
FEED
TANK
#1
SYSTEM
6000 GAL.
STRIPPER
FEED TANK
CONDENSATE
FROM 2 TANK FARM
VIA TANK PUMP PIT
CONDENSER
12" DIA. x 6'
CONDENSATE
STORAGE
TANK
10,000 GAL.
DECANTER
700 GAL.
STRIPPER
THERMOSYPHON
5.75 x 10⁶ BTU/HR
ABOVE GROUND
SHIELDED AREA ENCLOSED
SHIELDED ROOM
ABOVE GROUND, ENCLOSED
VESSEL VENT SYSTEM
& HOT PUMPS
CONTROL
ROOM
GALLERY
DOOR
COOL.
DECANTER
TOP-STRIPPER
STRIPPER
CONDENSER
DISTILLATE
TANK
STEAM
FEED
TANK
FEED TANKS
6000 GAL.
N

ARH-231
PAGE A 93

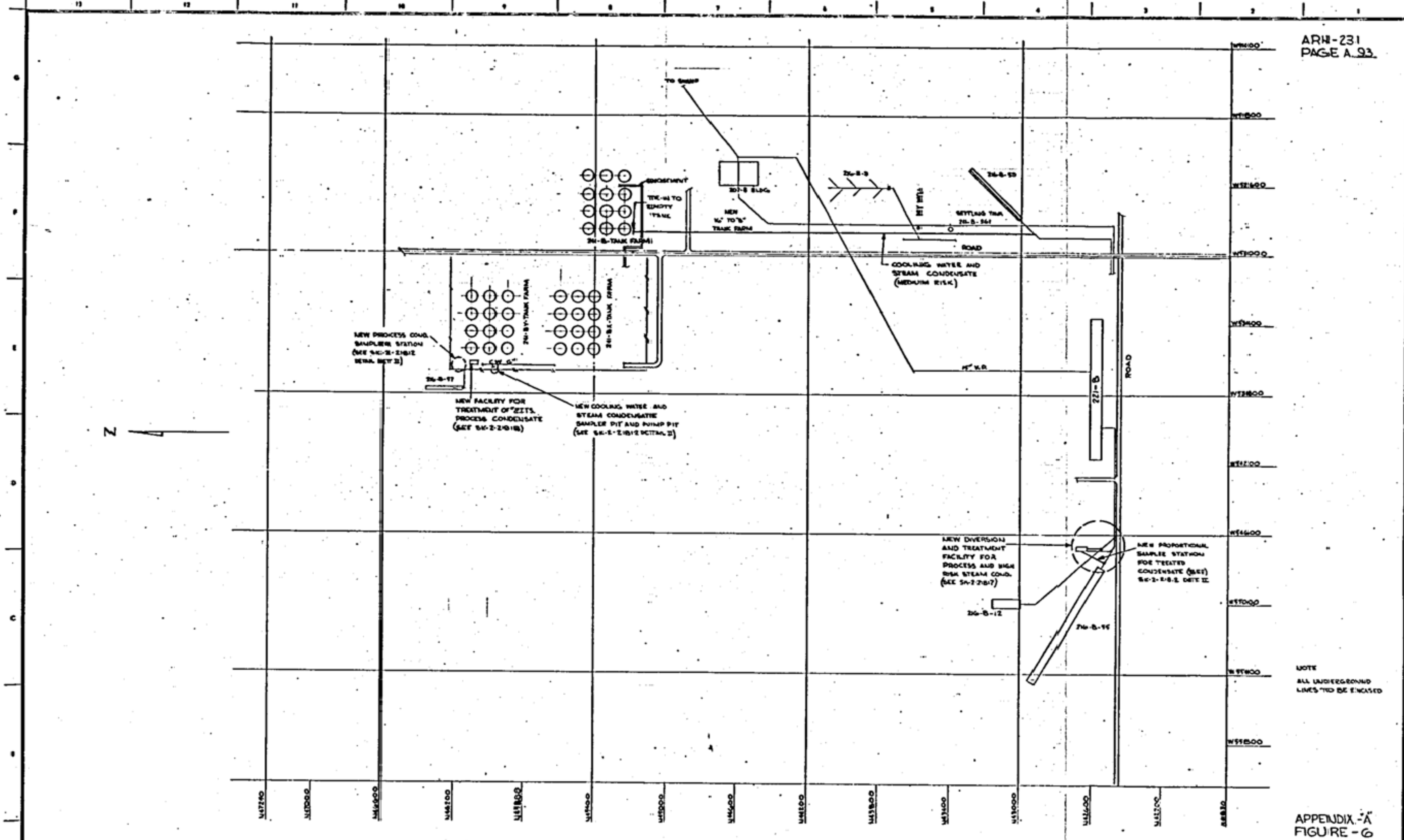

APPENDIX "A"
FIGURE - 6

U. S. ATOMIC ENERGY COMMISSION
RICHLAND OPERATIONS OFFICE
ISOCHEM INC.
LOW LEVEL WASTE MODIFICATIONS
221-B PLANT AREA
WASTE MANAGEMENT STUDY
200 E
NONE
SK-2-21816

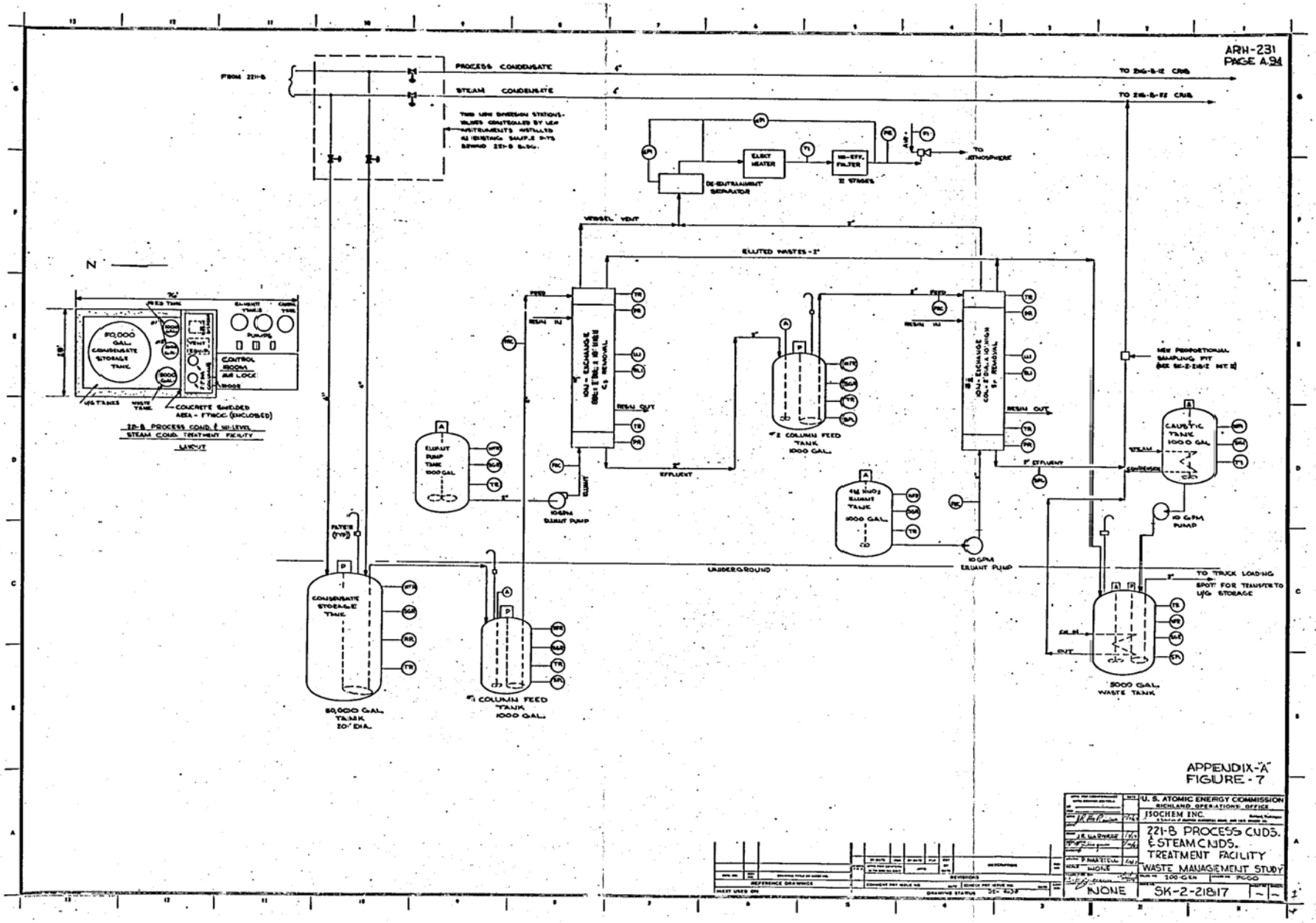
ARH-231
PAGE A-94
PROCESS CONDENSATE
STEAM CONDENSATE
TO 216-B-12 CRIB
TO 216-B-12 CRIB
FROM 221-B
ELECT HEATER
HI-EFF. FILTER
2 STAGES
TO ATMOSPHERE
DE-ENTRAINMENT SEPARATOR
VESSEL VENT
ELUTED WASTES - 2"
FEED
RESIN IN
RESIN OUT
EFFLUENT
ION - EXCHANGE
ELUANT PUMP TANK 1000 GAL
10 GPM ELUANT PUMP
#2 COLUMN FEED TANK 1000 GAL.
CAUSTIC TANK 1000 GAL
10 GPM PUMP
NEW PROPORTIONAL SAMPLING PIT
UNDERGROUND
TO TRUCK LOADING SPOT FOR TRANSFER TO UFG STORAGE
CONDENSATE STORAGE TANK
50,000 GAL. TANK 20' DIA.
#1 COLUMN FEED TANK 1000 GAL.
5000 GAL. WASTE TANK
N
50,000 GAL. CONDENSATE STORAGE TANK
FEED TANK
ELEVATOR TANKS
PUMPS
CONTROL ROOM
AIR LOCK
DOOR
UFG TANKS
WASTE TANK
CONCRETE SHIELDED AREA - FTNGC. (ENCLOSED)
221-B PROCESS COND. & HI-LEVEL STEAM COND. TREATMENT FACILITY
LAYOUT
APPENDIX-"A"
FIGURE - 7
U. S. ATOMIC ENERGY COMMISSION
RICHLAND OPERATIONS OFFICE
JSOCHEM INC.
221-B PROCESS CNDS. & STEAM CNDS. TREATMENT FACILITY
WASTE MANAGEMENT STUDY
NONE
SK-2-21817

ARH-231
PAGE A.95

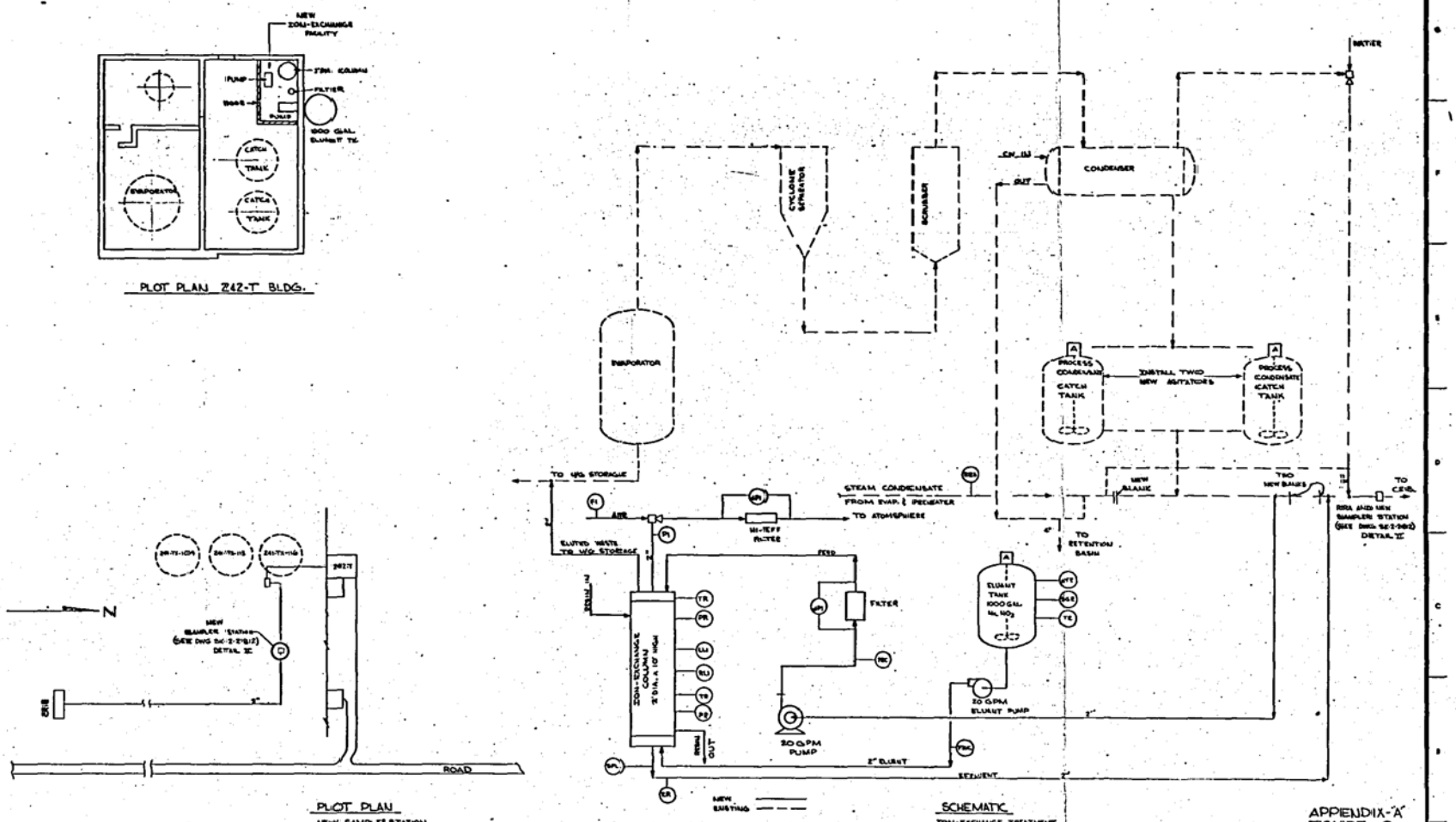

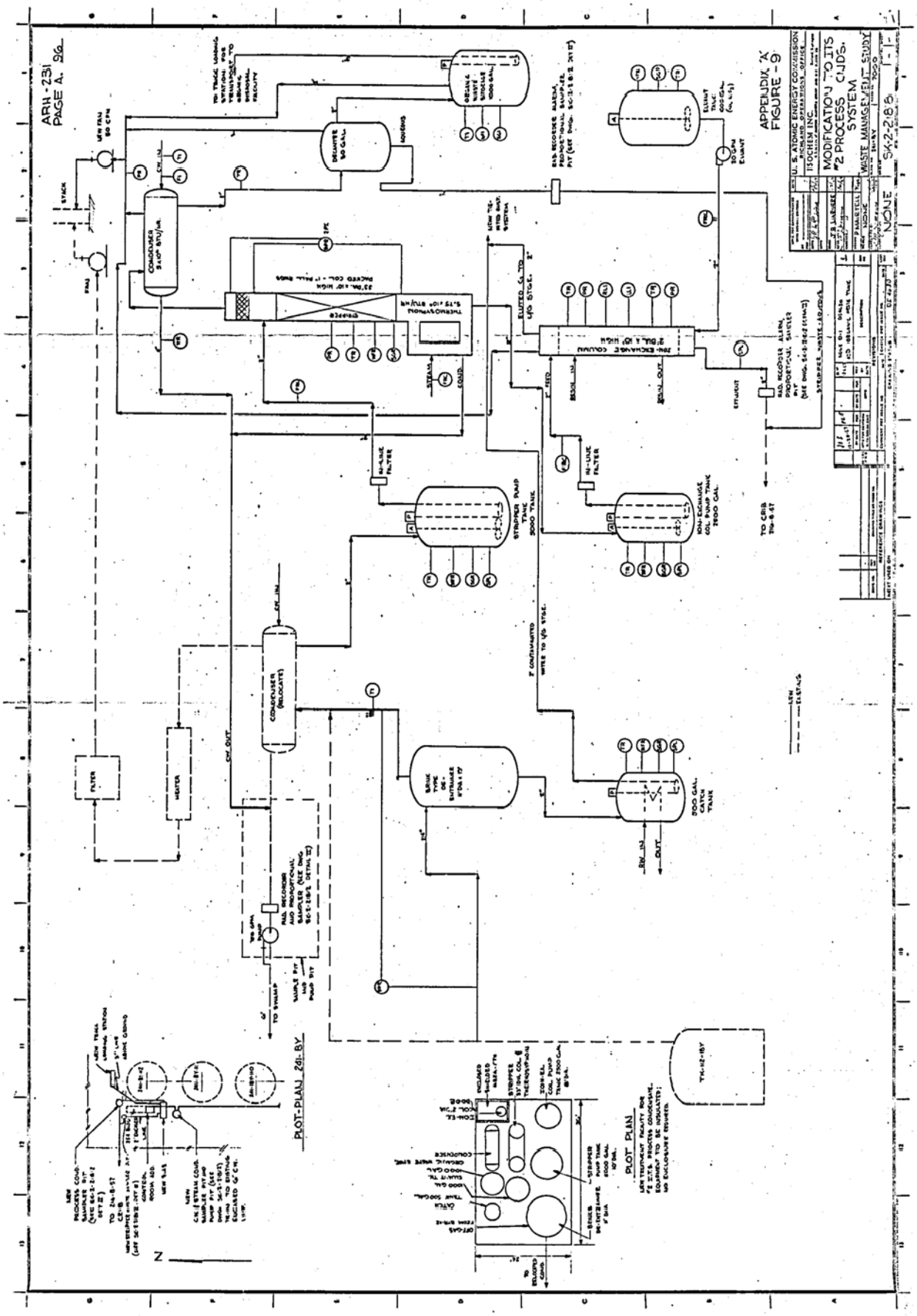
ARH-231
PAGE A. 96
APPENDIX "A"
FIGURE - 9
U. S. ATOMIC ENERGY COMMISSION
ISOCHEM INC.
MODIFICATION TO ITS
#2 PROCESS CWDS.
SYSTEM
WASTE MANAGEMENT STUDY
SK-2-286
NONE
STACK
FAN
CONDENSER
DRAINER
STRIPPER PUMP TANC
ION EXCHANGE COLUMN
ION EXCHANGE COL PUMP TANK
FILTER
HEATER
CONDENSER
PLOT-PLAN 26L BY
PLOT PLAN
TO CRIB
TO SWAMP
EFFLUENT
STRIPPER
ION EXCHANGE
COLUMN
COND.
STEAM
COLD

ARH-231
PAGE A. 97

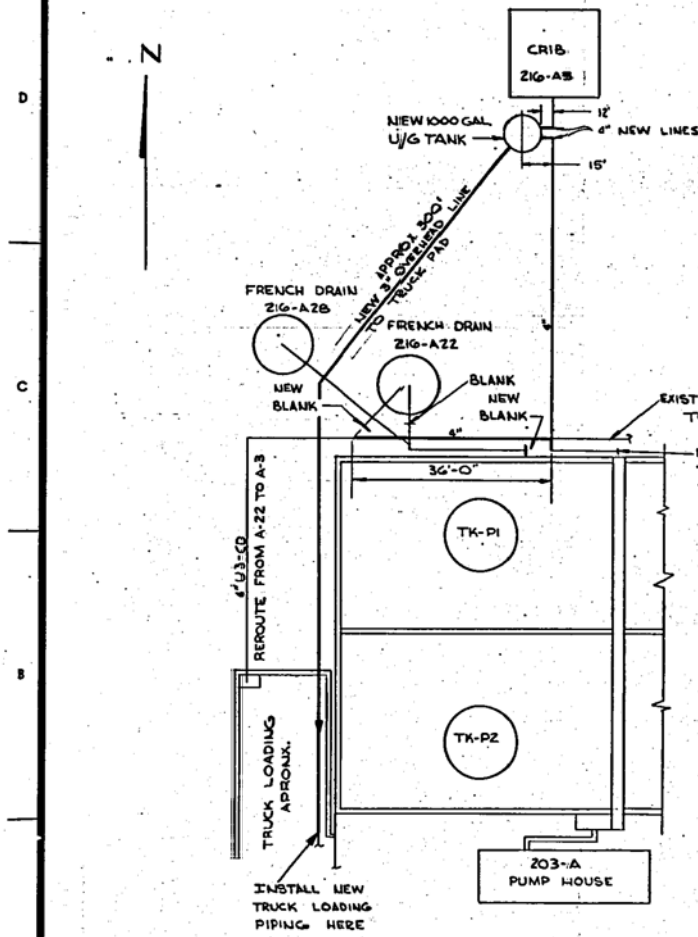

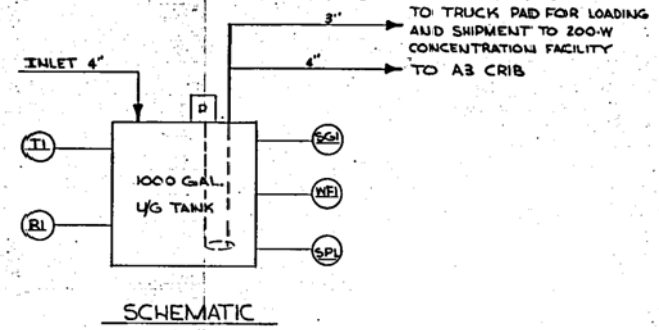

SCHEMATIC

NEW LINES

APPENDIX "A"
FIGURE-10

APPD. FOR CONFORMANCE WITH DESIGN CRITERIA	DATE
BY	
FOR	
APPD J R LaRiviere	11/7/67
APPD	
ENGR J.R. LaRIVIERE	11/7/67
DSGN APPD J.M. Jacques	11/20/67
CHECKED	
DRAWN P. MARTELL	10/25/67
SCALE NONE	
CLASSIFIED BY J.R. Jacques	12/21/67 DATE
CLASSIFICATION NONE	

U. S. ATOMIC ENERGY COMMISSION
RICHLAND OPERATIONS OFFICE
ISOCHEM INC. Richland, Washington
A Subsidiary of MARTIN MARIETTA CORP. AND U.S. RUBBER CO.

LOW LEVEL LIQUID WASTE MODIFICATION - 203-A FACILITIES
WASTE MANAGEMENT STUDY

BLDG. NO. 200 GEN | INDEX NO. 7-TU
DWG NO. SK-2-21813 | SHEET NO. — | SHTS TS —

DWG. NO.	DRAWING TITLE OR INDEX NO.
REFERENCE DRAWINGS	
NEXT USED ON	

MICRO FM'D	BY-DATE	FOR	BY-DATE	FOR	REV BY DATE	DESCRIPTION	REV NO.
	APPD FOR CONFORM WITH DESIGN CRIT		APPD				

REVISIONS

COMMENT PRT ISSUE NO. DATE | CHECK PRT ISSUE NO. DATE | LAST REV

DRAWING STATUS DI 4630

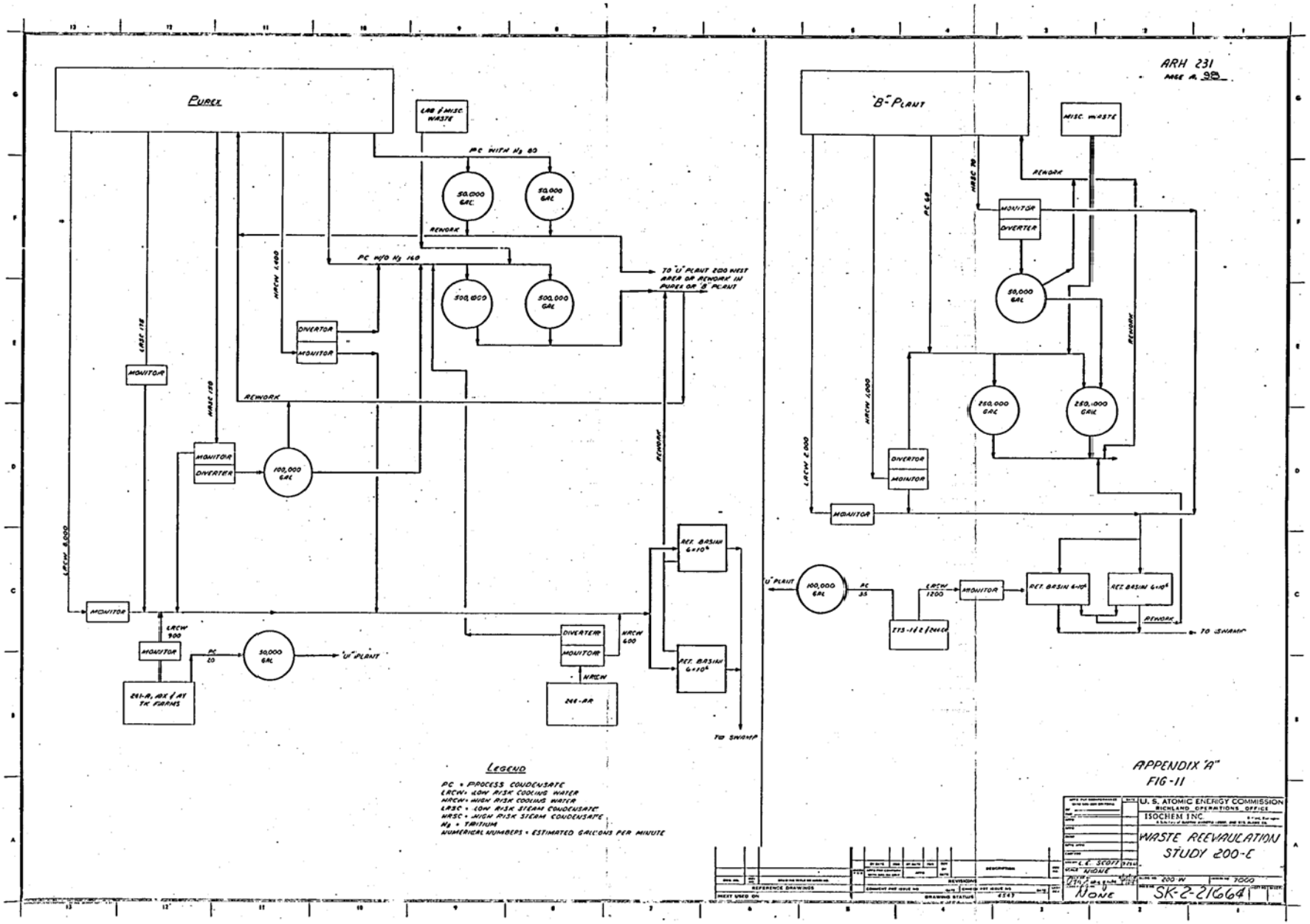
ARH 231
PAGE A 98
PUREX
LAB & MISC. WASTE
PC WITH H3 60
50,000 GAL
50,000 GAL
REWORK
PC W/O H3 160
500,000
500,000 GAL
TO "U" PLANT 200 WEST AREA OR REWORK IN PUREX OR "B" PLANT
LRCW 1,000
DIVERTOR
MONITOR
LRSC 118
MONITOR
HRSC 120
REWORK
MONITOR
DIVERTER
100,000 GAL
REWORK
LRCW 8,000
MONITOR
LRCW 900
MONITOR
PC 20
50,000 GAL
"U" PLANT
241-A, AX & AY TK FARMS
DIVERTER
MONITOR
LRCW 600
HRCW
241-AR
REF. BASIN 6×10⁶
REF. BASIN 6×10⁶
TO SWAMP
"B" PLANT
MISC. WASTE
REWORK
HRSC 70
PC 68
MONITOR
DIVERTER
50,000 GAL
REWORK
HRCW 1,000
250,000 GAL
250,000 GAL
LRCW 2,000
DIVERTOR
MONITOR
MONITOR
"U" PLANT
100,000 GAL
PC 35
LRCW 1200
MONITOR
REF. BASIN 6×10⁶
REF. BASIN 6×10⁶
REWORK
TO SWAMP
LEGEND
PC = PROCESS CONDENSATE
LRCW = LOW RISK COOLING WATER
HRCW = HIGH RISK COOLING WATER
LRSC = LOW RISK STEAM CONDENSATE
HRSC = HIGH RISK STEAM CONDENSATE
H3 = TRITIUM
NUMERICAL NUMBERS = ESTIMATED GALLONS PER MINUTE
APPENDIX "A"
FIG-11
U. S. ATOMIC ENERGY COMMISSION
RICHLAND OPERATIONS OFFICE
ISOCHEM INC
WASTE REEVALUATION STUDY 200-E
L.E. SCOTT
NONE
200-W
7000
SK-2-21664

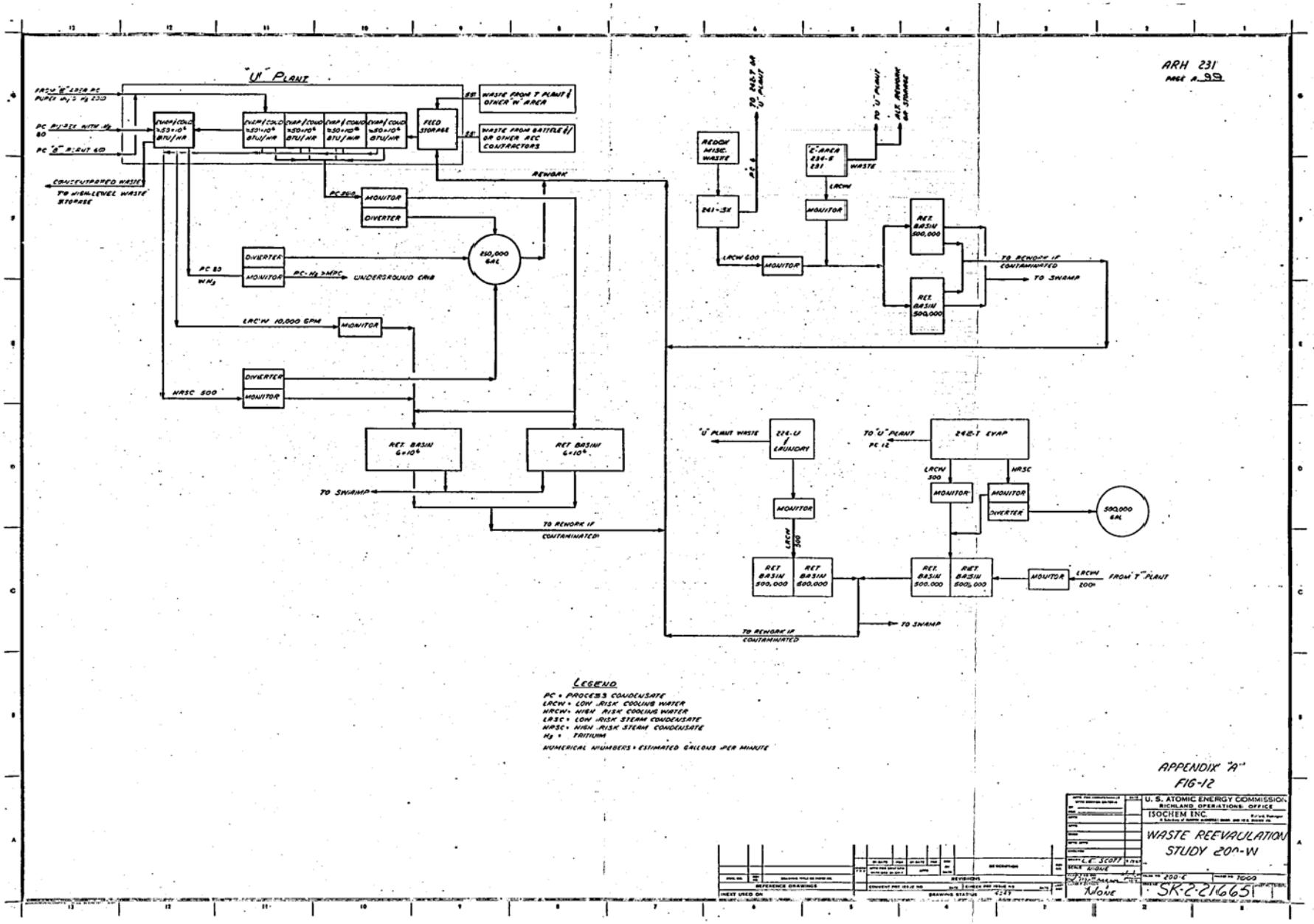
"U" PLANT
ARH 231
PAGE A-99
WASTE FROM T PLANT & OTHER "W" AREA
WASTE FROM BATTELLE & OR OTHER REC CONTRACTORS
FEED STORAGE
EVAP/COLD
CONCENTRATED WASTE TO HIGH-LEVEL WASTE STORAGE
REWORK
MONITOR
DIVERTER
250,000 GAL
UNDERGROUND CRIB
LRCW 10,000 GPM
NRSC 500
RET. BASIN 6×10⁶
TO SWAMP
TO REWORK IF CONTAMINATED
REDOX MISC. WASTE
241-SX
LRCW 600
"Z" AREA 236-B 231
WASTE
LRCW
RET. BASIN 500,000
"U" PLANT WASTE
224-U EVAPORATOR
TO "U" PLANT
PC 12
242-T EVAP
LRCW 500
NRSC
500,000 GAL
RET. BASIN 500,000
LRCW 200
FROM "T" PLANT
LEGEND
PC = PROCESS CONDENSATE
LRCW = LOW RISK COOLING WATER
HRCW = HIGH RISK COOLING WATER
LRSC = LOW RISK STEAM CONDENSATE
NRSC = HIGH RISK STEAM CONDENSATE
H₂ = TRITIUM
NUMERICAL NUMBERS = ESTIMATED GALLONS PER MINUTE
APPENDIX "A"
FIG-12
U. S. ATOMIC ENERGY COMMISSION
RICHLAND, OPERATIONS OFFICE
ISOCHEM INC.
WASTE REEVALUATION STUDY 200-W
L.E. SCOTT
200-E
7000
None
SK-2-216651

APPENDIX B

WASTE ORGANIC DISPOSAL AND TREATMENT

E. A. Coppinger
Chemical Development and Engineering Section
Battelle Northwest Laboratory

TABLE OF CONTENTS

		Page
I.	INTRODUCTION	B.1
II.	PRESENT SITUATION	B.1
	A. Plutonium Reclamation Facility	B.1
	B. Purex Plant	B.2
	C. B Plant	B.4
III.	RATIONALE FOR ELIMINATING GROUND DISPOSAL	B.4
IV.	DEVELOPMENT OF DISPOSAL SCHEME	B.5
	A. Plutonium Reclamation Facility	B.5
	B. Purex Plant	B.8
	C. B Plant	B.9
	D. Organic Burning	B.10
V.	PROGRAM COSTS	B.11
	A. Capital Costs and Expenditure Pattern	B.11
	B. Operating Costs	B.12
VI.	HAZARDS	B.13
VII.	RESEARCH AND DEVELOPMENT REQUIREMENTS	B.13
VIII.	REFERENCES	B.16
TABLES		
I.	ESTIMATED CAPITAL COSTS	B.17
FIGURES		
1.	CONCEPTUAL DESIGN FOR ORGANIC STORAGE TANK - PLUTONIUM RECLAMATION FACILITY	B.18

		Page
2.	CONCEPTUAL PIPING AND ORGANIC TANK PLACEMENT - PLUTONIUM RECLAMATION FACILITY	B.19
3.	CONCEPTUAL DECANTER DESIGN	B.20
4.	CONCEPTUAL FLOW DIAGRAM FOR PUREX DECANTER	B.21
5.	CONCEPTUAL DESIGN FOR ORGANIC STORAGE TANK - PUREX AND B PLANTS	B.22
6.	CONCEPTUAL PIPING AND ORGANIC TANK PLACEMENT - PUREX PLANT	B.23
7.	CONCEPTUAL FLOW DIAGRAM FOR B PLANT DECANTER	B.24
8.	CONCEPTUAL PIPING AND ORGANIC TANK PLACEMENT - B PLANT	B.25

APPENDIX B

WASTE ORGANIC DISPOSAL AND TREATMENT

I. INTRODUCTION

Organic wastes containing relatively low levels of radioactivity are discharged from the Purex Plant and the Plutonium Reclamation Facility. Organic wastes will also be discharged from B Plant after its startup in 1968. These wastes are portions of the solvent used in solvent extraction processing in each of the plants. Currently, these wastes are being discharged to underground cribs or tile fields and are within the scope of the Low Level Waste Management Program.

This Appendix defines the organic waste disposal picture as it presently exists and develops disposal schemes for each of the three plants using organic burning as the final organic disposal step. Alternate ultimate disposal techniques for organics are currently being studied experimentally. Operating and capital costs for the disposal schemes are also presented.

II. PRESENT SITUATION

The present organic disposal status of the various separations plants is discussed in the following subsections. The types and estimated amounts of organic waste are also given.

A. Plutonium Reclamation Facility

At the Plutonium Reclamation Facility, both aqueous and organic wastes are discharged to the Z-1A tile field. In some cases under the present mode of operation, organic waste is discharged to the crib as discrete batches or "slugs" of organic. Sources of organic to the Z-1A tile field are as follows:

1. Discard organic batches from the solvent extraction battery. This material is 80 volume percent carbon tetrachloride (CCl_4) and 20 volume percent tributyl phosphate (TBP) and is intermittently cribbed because of buildup of degradation products and carbonaceous materials.

2. Interface "jettings" from the CA column. This organic is 80 volume percent CCl_4 and 20 volume percent TBP. The CA column interface has been jetted directly to the crib approximately twice per shift to minimize solids buildup and emulsion formation at the interface.

3. Organic from the W-2 static wash column used to remove plutonium from the CAW. This organic is 70 volume percent CCl_4 and 30 volume percent DBBP (dibutylbutyl phosphonate) and is intermittently cribbed due to degradation products and buildup of carbonaceous materials.

4. Organic from the W-12 batch wash system that removes americium and any residual plutonium from the CAW. This organic is 70 volume percent CCl_4 and 30 volume percent DBBP and is intermittently cribbed when the buildup of degradation products and carbonaceous materials causes inadequate phase separation.

5. Entrained organic in the aqueous wash stream (AAW) from the W-12 batch wash tank discussed in 4. above.

6. Infrequent organic spills of perhaps 10 to 20 liters at a time. Most frequently this material is 80 volume percent CCl_4 and 20 volume percent TBP, but occasionally is 70 volume percent CCl_4 and 30 volume percent DBBP. This material is passed through a special CX column to wash out residual plutonium and then cribbed.

7. A small amount of "fabrication" oil that gets into the solvent extraction battery organic during the intermittent periods when fabrication oil is being processed to recover its plutonium content. Fabrication oil was used in past plutonium machining operations and initially contained 75 volume percent CCl_4 and 25 volume percent lard oil, but during use a portion of the CCl_4 evaporated. The composition of stored fabrication oil is estimated to be 50 volume percent CCl_4 and 50 volume percent lard oil. About 6000 gallons remain in storage in 5-gallon containers. As manpower is available, fabrication oil is batch washed in 10M HNO_3 to remove the plutonium. After washing, the fabrication oil is routed to the Z-1A tile field.

The estimated amount of organic presently discharged to the Z-1A tile field is shown in the following table:

Current Organic Disposal to Z-1A Tile Field

Type	Amount, gal/yr
80 vol % CCl_4-20 vol % TBP	4400
70 vol % CCl_4-30 vol % DBBP	6600

The above volumes are based on average organic consumption over a period of several months for the past year during three-shift operation. Actually, the CCl_4 consumption is higher than the amount shown discharged to the tile field. Some evaporates during processing. No fabrication oil volume is shown because of the intermittent processing and the small volume involved to date.

B. Purex Plant

Sources and amounts of organic waste from the Purex Plant are discussed below:

1. Organic discharged with the OWW (organic wash solution) to the underground storage tanks is estimated to range from 2600 gallons

per month to 5700 gallons per month (Reference 1). This organic is 70 volume percent normal paraffin hydrocarbon (NPH) and 30 volume percent TBP. This loss occurs from the Number 1 solvent treatment system and results from the lack of decantation equipment capable of removing organic entrainment and organic "heels" when discarding the OWW. From the boiling underground storage tanks, much of the organic is boiled off (except any TBP that is hydrolyzed) and is ultimately discharged to the crib along with tank farm condensate.

2. Batches of "bad" organic from the organic treatment systems for the solvent extraction batteries or batches of special solvent resulting from special plant tests are other sources of organic wastes. This material is currently discharged to the 216-A-31 organic crib. Historically, the total amount of organic discharged to this crib has been small and individual batches have been small. Records show that 8070 gallons of organic have been discharged to the 216-A-31 crib since it was put into service in January, 1963 (Reference 1). In 1964, 1000 gallons of organic (Soltrol and trilauryl amine) were cribbed. This material resulted from a plant test on batch recovery of residual plutonium and neptunium from high level Purex aqueous waste (1WW). In 1966, two small batches of organic were cribbed. One batch consisted of 2500 gallons of NPH containing low radioactivity. The other batch was 3700 gallons of typical plant organic (70 volume percent NPH and 30 volume percent TBP) with a radioactive isotope content as shown in the table below (Reference 1):

Radioactive Isotope Content in Discharged Organic

Isotope	Amount/3700 gallons
Ce-144	3970 curies
Ru-103-106	454 curies
Cs-137	143 curies
Pa-233	5 curies
Zr-Nb-95	2 curies
Pu	0.56 grams
U	4 kilograms

While the above tabulated data gives a typical example of the potential radioactivity that could be present in discharged organic, vigorous washing would reduce the radioactivity content well below that shown and would remove essentially all of the plutonium and uranium.

3. Organic waste can also result from the need to discard the entire plant inventory of organic. However, the entire in-process inventory of organic has been discarded only once since Purex Plant startup as a result of adverse extraction properties. The entire organic inventory has been discarded twice as a result of changing diluents. The in-process inventory is about

30,000 gallons although during diluent changes larger total volumes have been discarded due to incorporation of unused diluent from the chemical tank farm, 211-A. These large volumes have been discharged to the ground on a specific soil retention basis. For example, when the diluent was recently changed to NPH, the Soltrol-TBP organic was discarded to the abandoned 216-A-7 crib on a specific retention basis. As a result of the very satisfactory performance of the NPH diluent, the maturity of the process, and the plant operating experience, it is highly unlikely that the total inventory will be discarded in the future.

C. B Plant

The organic waste disposal problem at B Plant can be only roughly predicted since the plant has not yet begun operation. Probable sources and estimated amounts of organic waste are discussed below.

1. As in the Purex Plant, organic will be discharged with the organic wash (IOW) to underground storage tanks. The organic loss results from the present lack of suitable equipment for de-entraining organic when discarding the IOW. This organic is 0.2M TBP and 0.3M di(2-ethylhexyl) phosphoric acid (D2EHPA) in a NPH diluent. An estimated 5000 to 10,000 gallons per year of organic will probably be discarded with the IOW during the initial years of operation.

   Depending on the activity, the IOW will be discarded either to the boiling underground tanks at the Purex Plant or to underground tanks containing nonboiling waste. Ultimately, if the 241-AX tanks are used, the organic will be discharged to cribs with the condensate from the boiling tanks.

2. Another potential source of waste is organic that must be discarded because of adverse extraction properties. This organic waste will have the same composition as described above, and could be discarded as small intermittent batches or as a complete plant inventory of about 10,000 gallons. If necessary, such wastes could be discharged to the 216-B-56 crib. Although there is no operating experience as a basis, it is estimated that, because of the extremely high radiation exposure and normal shakedown problems, as much as one plant inventory per year could require discarding during the initial years of operation.

III. RATIONALE FOR ELIMINATING GROUND DISPOSAL

Organic waste disposal adds radioactivity to the ground and increases the potential for driving fission products into the ground water. Some of the compounds in organic wastes are complexants for plutonium and fission products. In some cases, the plutonium and fission products may preferentially stay with the solvent rather than be adsorbed on the ion exchange materials in the soil. Thus, if organic is discharged to the soil, the

subsequent intentional or accidental discharge of aqueous waste or other water to the same area could possibly drive the organic and contained fission products into the ground water.

A potentially hazardous situation could also occur in ground disposal facilities where aqueous waste is discarded along with discrete volumes or "slugs" of organic. The potential for downward movement of plutonium as a result of organic slugging and the possibility of organic being driven to the ground water are not fully understood. Laboratory studies on radioisotope movement in the soil below cribs have usually been made using subsaturation amounts of organic and "slugging" effects are not well known. Furthermore, such effects are difficult to evaluate in the laboratory.

Another potential problem associated with organic disposal involves the organic residue present in the condensate from the boiling Purex tanks. The development of methods to remove radioactive nuclides from this condensate is a part of the Low Level Waste Management Program. Ion exchange is a possible removal method. However, the organic residue in the condensate tends to blind the resin and decrease capacity. Reduction of the amount of organic in the condensate should make the condensate easier to treat.

IV. DEVELOPMENT OF DISPOSAL SCHEME

The equipment that could be used to eliminate disposal of organic waste to the ground and provide for adequate organic waste disposal is discussed in the following subsections. In most cases the disposal schemes will proceed as a series of integrated steps to provide a reasonable expenditure pattern and provide positive and practical means of organic waste disposal. Tank storage will be used as the "base" case with which other disposal steps can be either integrated or compared.

A. Plutonium Reclamation Facility

1. Improved In-Plant Treatment

A primary step in the disposal of organic wastes from the plant will be a continuing effort to reduce the volume requiring disposal by improved in-plant treatment. This effort is now under way. Jetting of the CA column interface directly to the Z-1A tile field was discontinued on a test basis during the week of October 2, 1967. A polypropylene felt filter has been installed and is now being tested as a means of removing emulsion-forming solids from the interface jettings. The separated phases are then returned to the column. A centrifuge for the CAW has been installed upstream of the W-12 batch wash tank and is being tested. By removing solid carbonaceous material, this centrifuge will reduce the rate organic "fouling" and subsequently the rate of DBBP-CCl_4 disposal. An additional wash column (the CR column) is being installed for the organic from the solvent extraction columns. This wash column will help reduce the rate of TBP-CCl_4 disposal. The reduction in organic disposal volumes is estimated to be a factor of two as a result of successful

operation of the equipment additions listed above.

In-plant improvements are currently being proposed for the CAW scrubbing system to improve americium and residual plutonium recovery from the CAW (Reference 2). These improvements will replace the W-2 static wash column and eliminate timing problems associated with phase separations in the W-12 batch wash system. The improvements should reduce the disposal volume of 70 volume percent CCl_4 and 30 volume percent DBBP even further. The proposed improvements essentially consist of three columns. The W-13 tank would be used to intermittently carbonate wash the organic phase. The first column will be used to neutralize the CAW to the desired acidity. The second will remove plutonium and the third will remove americium. The proposed system will allow much longer settling times and more careful decantation than is now possible in the W-12 batch wash system. Thus, organic entrainment or organic "slugging" in the aqueous wash waste will be reduced and possibly eliminated.

2. Disposal to Storage Tank

The most positive and well understood means of eliminating waste disposal to the ground is by tank storage. Interim tank storage for batches of "bad" organic is proposed as the quickest and surest means of eliminating the disposal of organic waste to the ground. Provision of enough storage to hold the organic waste generated during two years of operation will allow adequate time to develop, evaluate, and install alternative disposal systems (for example, incineration) if desired. Also, the use of tank storage and determination of the costs involved provides a base for comparison with any subsequent steps to treat the stored waste or any alternative disposal techniques.

Corrosion is the major questionable feature of tank storage. Thus, all organic must be washed with an aqueous caustic or carbonate solution to remove acid prior to storage.

A conceptual design of the storage tank is shown in Figure 1. This tank has a volume of about 19,000 gallons and would be used to store both the CCl_4-TBP and CCl_4-DBBP wastes. This volume would provide storage space for about two years of operation at 75 percent of the present organic waste volumes plus 10 percent freeboard. If plant improvements bring about the expected reduction in organic waste volumes, the tank would provide storage space for a considerably longer period. Also, the tank is equipped with a small portable blower and filter system so that small volumes of air can be drawn through the tank to slowly evaporate the volatile CCl_4. Since CCl_4 will make up in excess of 70 percent of the organic waste, evaporation of all of the CCl_4 discharged to the tank could allow use of over 7 years without waste removal if corrosion studies do not preclude such a period of usage.

The tank, depicted on Figure 1, is a horizontal cylinder with dished ends and is constructed of stainless steel. The fill line is connected to the tank underground. Four other lines extend above grade. One line is a 20-inch-diameter "manhole" or pump access hole to provide later installation of equipment to permit removal or circulation of the tank contents. Two lines are vents equipped with filters. One vent line is also attached to a small portable exhauster. The fourth line is provided for sampling, liquid level rodding, or addition of chemicals as desired. Possible tank and fill line locations are shown in Figure 2 in relation to the existing grade elevations.

3. Disposal of Stored Organic

The organic waste must ultimately be removed from the tank for a more permanent type of disposal. Treatment in the storage tank with a variety of aqueous washes and subsequent reuse in the Plutonium Reclamation Facility is not practical due to the mixture of DBBP and TBP solvents and the probable contamination with lard oil. Combustion in an incinerator or organic burner prior to CCl_4 removal is questionable due to the nonflammable properties of CCl_4 and the possibility of forming phosgene. As a result, a major portion of the CCl_4 in the tank will be evaporated intermittently by utilizing the vent and blower system installed on the tank. A pump will be installed on the tank and the organic will be periodically pumped (between additions of current organic waste) to drums or a tank trailer for transport to an incinerator or organic burner. Burning of residual stored solvent along with organic wastes from other plants is discussed later in Section IV-D.

4. Alternative Schemes Considered

Alternative schemes for disposal of the residual organic from the storage tank and disposal of the current organic waste from the Plutonium Reclamation Facility have been considered during this study. These alternative schemes have not been incorporated as the proposed primary disposal scheme because of lack of technical data or lack of space for required equipment within the Plutonium Reclamation Facility.

One alternative involves disposal of the residual solvent (DBBP plus TBP)in the storage tank after evaporation of the CCl_4 by means other than burning. Preliminary data (Reference 3) indicate that it may be possible to hydrolyze the TBP and DBBP to water soluble sodium compounds with an aqueous caustic-methonol wash. Because of the long available tank residence time, a simple caustic wash might be adequate. The aqueous wash could be added to the residual solvent in the storage tank and slowly circulated through the organic by a pump installed on the 20-inch riser on the tank. After hydrolysis and solubilization of the solvent, the aqueous could be pumped to a tank trailer

and discharged to the aqueous underground storage tanks via load-in stations that are planned (Reference 4) as part of the overall waste management program. Solvent hydrolysis is discussed further in Section VII, Research and Development Requirements.

A second alternative involves the installation of steam distillation equipment in the Plutonium Reclamation Facility while the organic storage tank is being filled. Such equipment would allow recovery and recycle of the CCl_4 from current organic wastes. Organic waste could also be slowly returned from the storage tank to recover the CCl_4 for recycle and eliminate the need for CCl_4 evaporation from the storage tank. The residual TBP and DBBP could be removed to drums or a tank trailer for transport to an incinerator or organic burner.

B. Purex Plant

1. Improved In-Plant Treatment

Initial emphasis at Purex will be to reduce the volume requiring disposal by improved in-plant treatment. Additional equipment is proposed to reduce and eventually eliminate organic losses with the OWW. The latest technology on organic washing will also be brought to bear on any batches of "bad" organic in order to reduce the volume that must be discharged from the plant.

Either decanters or liquid-liquid centrifuges can be employed to reduce organic losses to the OWW. At present, the liquid-liquid centrifuges originally installed in the Purex Plant are not being used and those in G cell have been removed. Possibly, a centrifuge and necessary piping could be replaced in G cell. However, centrifuges are mechanically complicated and suffer from operating difficulties and frequent maintenance. Decanters are preferred if one can be developed and designed that can handle the MnO_2 solids present in the OWW. (Such solids would also complicate operation of liquid-liquid centrifuges.)

Decanters are proposed for the organic waste treatment scheme for the Purex Plant. Figure 3 shows a conceptual design of the decanter for the Number 1 solvent system. This design incorporates a sparger and a tank washing nozzle as a means of removing the solids. Figure 4 gives tentative instrumentation and piping requirements. For purposes of cost estimation, the decanter is assumed to be installed in a portion of G cell originally used for liquid-liquid centrifuges. Also, installation of a standard 1725 gallon tank beneath the decanter is assumed for aqueous overflow and collection of solids cleanout solutions. It is recognized that development of an adequate decanter design will be required and further study will probably show more optimum placement and piping arrangements. However, the conceptual design permits a reasonable estimate of the costs involved for decanter installation.

2. Disposal to Storage Tank

"Bad" batches of Purex organic would be stored in surge tankage installed outside the plant. Such tankage serves three functions: 1) immediate storage space for removal of "bad" organic from the plant, 2) possible facilities for organic treatment that are not directly required for routine plant operation, and 3) storage tankage to permit orderly scheduling of "bad" organic to the incinerator. The tank shown on Figure 5 has a volume of 22,000 gallons and would be used to store both normal plant organic (NPH-TBP) and batches of different solvent from special plant tests. This volume would provide storage space for one-half the in-process inventory plus one "bad" batch of about 5000 gallons plus 10 percent freeboard. Alternatively, this space would provide storage for over 3 years of operation at 6000 gallons of "bad" organic per year plus freeboard.

Conceivably, a smaller tank could be used based on estimated waste volumes and past discharges to the 216-A-31 crib. However, as discussed later, the B Plant storage tank is specified at 22,000 gallons. The savings arising from building two identical tanks should counterbalance the use of a slightly smaller tank for Purex organic, especially when the volume of organic waste is uncertain.

The tank is a horizontal cylinder with dished ends and is constructed of stainless steel. The fill line is connected below grade from the existing line to the 216-A-31 crib. Three other lines extend above grade. One is a 20-inch-diameter pump attachment to provide for removal or circulation of the tank contents. A second line is a vent equipped with a fibrous glass filter. The third line is provided for sampling, liquid level rodding, or addition of chemicals. For purposes of estimating excavation requirements, Figure 6 shows tentative estimates of tank and fill line depths in relation to the existing grade elevations. Because of the depth of the line to the 216-A-31 crib, a vertical section 13.5 feet long is included in the line to the new tank.

3. Final Organic Disposal

A more permanent type of disposal than tank storage must ultimately be provided for the current and stored organic waste. This final disposal step can be accomplished with either an organic burner or by burning the organic waste in the proposed incinerator for solid waste. Organic burning or combination with incinerable waste is discussed in more detail in Section IV-D.

C. B Plant

1. Improved In-Plant Treatment

As in the case of the other plants, primary emphasis will be

placed upon reducing the volume requiring disposal by improved in-plant treatment. An organic decanter is proposed for the organic waste treatment scheme for B Plant. Also, research and development on organic treatment will be continued to improve washing techniques and to develop a better understanding of the effect of radiation on strontium extraction coefficients.

For cost estimating purposes, the decanter for B Plant is assumed to be the same as shown in Figure 3 for the Purex Plant. Figure 7 gives tentative instrumentation and piping requirements. The decanter is assumed to be installed in Section 31. Also, installation of a Purex-type 1725 gallon tank beneath the decanter is assumed for aqueous overflow and collection of solids cleanout solutions.

2. Disposal to Storage Tank

As in the case of the Purex Plant, interim tank storage is proposed to allow adequate time to develop and install an alternative disposal method. The conceptual design of the tank is the same as for the Purex Plant and is shown in Figure 5. For purposes of estimating excavation requirements, Figure 8 shows tentative estimates of the tank and fill line depths in relation to the existing grade elevations.

The tank has a volume of 22,000 gallons and will be used to store both the normal plant organic and any batches of different solvent from special plant tests. This volume will provide storage space for two in-process organic inventories plus 10 percent freeboard or space for two years of operation assuming disposal of one in-process inventory of 10,000 gallons per year.

3. Final Organic Disposal

Permanent disposal of current and stored organic waste can be provided either by an organic burner or by burning the organic waste in the proposed incinerator for solid waste. Organic burning is discussed in more detail in Section IV-D, below.

D. Organic Burning

Final disposal of organic wastes can be accomplished by burning in the proposed incinerator for solid wastes or in a burner specifically designed for organic waste. The proposed incinerator for solid waste is discussed in detail in Appendix D. Basically, this incinerator consists of a burning chamber and equipment to clean the offgases. Since it should be possible to utilize this equipment (with slight additions and/or modifications) to burn the organic waste, the primary scheme proposes this means of final organic disposal.

Organic disposal in equipment specifically designed for organic burning is a potential alternative scheme. The Savannah River Plant

has burned slightly radioactive organic (Reference 6). Several varieties of commercial organic burners are available and burning of industrial organic wastes is a common occurrence (References 7 and 8). An example of an organic burner is the Destructure® (Reference 9), a commercial unit equipped with a scrubber. With commercial burners and considerable industrial experience available, development of the necessary modifications to a commercial burner should be possible in a reasonably short time. Timing could be extremely important should a decision be made not to install the solids incinerator.

V. PROGRAM COSTS

A. Capital Costs and Expenditure Pattern

Capital costs have been estimated for the proposed organic disposal scheme for the three plants. These costs are presented in Table I and include only costs for organic storage tanks and decantation equipment. Any capital costs associated with incineration are included in Appendix D.

The total capital cost of the various program steps listed in Table I is $740,000. The greater cost for the storage tank for the Plutonium Reclamation Facility primarily reflects the more complicated filter and exhauster system and the assumed longer fill line. The more expensive decanter system for B Plant reflects the possible crowding in the canyon cell and the probable requirement for more in-cell piping, demolition, and decontamination.

A tentative expenditure pattern for the $740,000 is shown in the following table:

Estimated Capital Expenditure Pattern

Item	Expenditure (In Thousands) FY 1969	FY 1970
1. Plutonium Reclamation Facility Tank	$ 95	$ 75
2. Purex Tank	90	75
3. B Plant	90	75
4. Purex Decanter	25	85
5. B Plant Decanter	30	100
Total, Fiscal Year	$330	$410

This expenditure pattern assumes that the decision is made to initiate the program in July, 1968, and that considerable desire exists to complete the program as soon as possible. The expenditure pattern further assumes that preliminary decisions will be made in the last half of FY 1968 to initiate research and development studies required to permit detailed design in FY 1968.

The expenditure pattern attempts to provide fairly uniform annual expenditures. In initial phases of the program, much of the total

®Garver-Davis, Inc., Cleveland, Ohio.

capital outlay will be for the storage tanks in order to eliminate ground disposal of organic in FY 1970. Most of the money for decanters will be spent in FY 1970 to allow adequate time during FY 1969 for development of a satisfactory unit.

B. Operating Costs

Incremental operating requirements are estimated to be small for the proposed organic waste disposal program. Manpower requirements for organic discharge are similar whether the organic is discharged to tanks or cribs. Estimated requirements for tank surveillance would include:

1. A routine once-per-shift check of the blower on one tank by a power operator during his regular rounds (approximately 30 minutes per shift).

2. A liquid level rodding of three tanks once per week (approximately 6 hours per week for three tanks).

3. A monthly sample of each tank for pH determination (approximately 72 hours per year for a radiation monitor and 72 hours per year for an operator).

4. A pH determination for 36 samples per year.

5. Intermittent repair of the blower on one tank (16 hours per year for a maintenance man and 16 hours per year for an operator).

Some of the above manpower requirements can be scheduled during slack or down time.

Because of the volume, the organic storage tanks could be emptied every two years. However, to even out the load at the incinerator and to incur more uniform annual costs, tank trailer trips would be scheduled each year from one or more of the tanks. Assuming a tank trailer with a working volume of 4000 gallons, about 5 trips per year would be required. Estimated manpower requirements to fill and empty the tank trailer are 8 hours for a truck driver, 4 hours for a radiation monitor, 6 hours for an operator, and 1 hour for a supervisor.

Incremental manpower, maintenance, utlities, and essential materials requirements for decanter operation are expected to be small. The equipment is not complex and includes few items that fail frequently. Operation is simple and will probably be handled at panel boards already staffed with operating personnel. Probably the most time consuming operation will be an estimated 4-hour cleanout operation at least twice per week.

Based on the above discussion of operating requirements, incremental operating costs are estimated to be about $10,000 per year (Reference 10). This cost does not include any credit for recovered organic from the decanters. Also, incremental costs (if any) associated with burning the organic in the incinerator are included in Appendix D. Along with this annual operating cost, there is an estimated initial expense of about $20,000 for installation of small deep-well turbine pumps and temporary discharge lines on the tanks.

VI. HAZARDS

For the organic waste disposal program, conventional hazards will be encountered that are similar to those routinely met. Typical hazards include organic flammability and CCl_4 toxicity.

While the organics to be handled are combustible (with the exception of CCl_4), their relatively low volatilities and high flash points preclude the possibility of fire or explosion under normal conditions. As in the operating plants and chemical tank farms, fire and explosion prevention will be accomplished by maintaining the temperature of the organic below the flash point, which is in the range of 160 to 190°F. The low temperature of the stored organic keeps the organic concentration in air too "lean" to support combustion. Since the organic is below its flash point at prevailing temperatures, it is a "Class III" organic and use of an inert-gas blanket is not required for flammability control.

Carbon tetrachloride is a highly toxic chemical that must be handled with care. The threshold limit value or air-borne concentration at which nearly all workers may be repeatedly exposed without adverse effect is 10 ppm. This value is considerably below the least detectable odor (70 ppm) so that chronic poisoning could occur on repeated exposures with no warning. Under the proposed operating plan, CCl_4 vapors will be slowly and intermittently discharged to the atmosphere from a storage tank. Discharge will take place only when no personnel are in the immediate vicinity. A chain fence will be provided with warning signs to keep out unauthorized personnel. During routine visits to the tank area, a halogen detector will be used to ensure that the area is free of CCl_4 fumes.

VII. RESEARCH AND DEVELOPMENT REQUIREMENTS

Several steps for waste organic disposal and treatment have been proposed earlier as the primary disposal scheme. These steps are recovery of organic from organic wash wastes by decantation, interim storage of batches of "bad" organic, and eventual burning of stored and current organic waste in the incinerator proposed for solid waste. Research and development requirements for this disposal scheme are discussed below:

A. Corrosion data are needed for conditions expected in the storage tanks - especially the tank for the Plutonium Recovery Facility due to the possible presence of chloride from CCl_4 decomposition.

B. Adequate decanters must be developed that can be used with the solids-containing organic wash wastes from the Purex Plant and B Plant. The major problem is the buildup of solids and eventual plugging of the decanter. A unit must be developed that can be periodically cleaned so that it can be operated without serious plugging. The decanters should be developed and designed to permit installation in available cell space.

C. The modifications required for the solids incinerator must be determined, developed and tested. Development problems include:

1. Development of a suitable organic feed system.

2. Determination and solution of problems associated with buildup of partially burned TBP, DBBP, or D2EHPA in the combustion chamber and the offgas system.

3. Development of a suitable offgas handling system capable of handling phosphorous oxides or phosphoric acid formed during organic combustion.

D. Due to the similarity of problems, it may be possible to combine development programs for modification of the solids incinerator and a separate organic burner. When burning organic, both systems require determination and development of the same items outlined in C. above. Thus, by acquisition and operation of a small commercial organic burner, data might be simultaneously obtained for both organic burning in the solids incinerator and for a backup burning method.

Research and development items that are needed to allow proper evaluation of potential alternative steps to the proposed primary disposal scheme are discussed below:

A. Firm vapor pressure data is needed on DBBP to allow design calculations on a steam distillation unit for CCl_4 recovery at the Plutonium Reclamation Facility.

B. Adequate separation of CCl_4 from TBP and DBBP should be demonstrated.

C. Further development is needed of methods to hydrolyze or chemically alter the TBP, DBBP, and D2EHPA to an aqueous-soluble material. Development of satisfactory methods would accomplish two major items. First, most of the radioactivity would go to the aqueous phase. Second, the TBP, DBBP, D2EHPA in the proposed storage tanks could be removed as aqueous-soluble materials and be discarded to the present underground storage tanks without burning. This would eliminate most of the problems of solid residues, corrosion, and phosphoric acid removal associated with organic burning.

One caustic hydrolysis method is being developed at Karlsruhe Nuclear Research Center (Reference 3). In this method, NaOH is dissolved in an aqueous solution that is 50 percent CH_3OH. This solution is added to a TBP-diluent mixture and the material is heated. After a few hours at 80 to 100°C, the TBP is converted to NaDBP which is soluble in the aqueous solution. A caustic hydrolysis can possibly be employed in the proposed organic storage tanks by circulating an aqueous wash through the stored organic for long periods of time as a substitute for high temperatures.

VIII. REFERENCES

1. D. J. Brown. Personal Communication. ARHCO, September 27 and 29, 1967, and October 3, 1967.

2. C. A. Lorenzen and R. F. Speakman. "Increased Plutonium and Americium Recovery by Continuous Solvent Extraction in the Waste Treatment Facility," ARH-20, Atlantic Richfield Hanford Company, September 11, 1967.

3. H. Krause et.al. "Experiments on the Disposal of Tributyl Phosphate in a Solvent Mixture," Waste Management Research Abstracts No. 3 p. 35-36. IAEA, Vienna, 1967.

4. R. J. Sloat. Personal Communication. ARHCO, November 13, 1967.

5. R. L. Merle. "Kodak Park Waste Disposal Facilities," Proceedings of 1966 National Incinerator Conference, New York, May 1-4, 1966, ASME, pp. 202-207, 1966.

6. J. A. Harper and L. Jolly. "A Method for Disposal of Large Quantities of Degraded and Low Level Contaminated Solvent," DPSPU-64-30-8B, E.I. duPont deNemours and Company, May, 1964.

7. P. H. Woodruff and A. W. Wene. "General Overall Approach to Industrial Incineration," Proceedings of 1966 National Incinerator Conference, New York, May 1-4, 1966, ASME, pp. 219-225, 1966.

8. E. S. Monroe. "New Developments in Industrial Incineration," Proceedings of 1966 National Incinerator Conference, New York, May 1-4, 1966, ASME, pp. 226-230, 1966.

9. G. L. Hanson. Personal Communication. ARHCO, October 9, 1967.

10. R. D. Jensen. Cost Estimate. ARHCO, no date.

UNCLASSIFIED

APPENDIX B

TABLE I

ESTIMATED CAPITAL COSTS[1]

Item	Capital Cost, Thousands of Dollars				
	Plutonium Reclamation Tank	Purex Tank	B Plant Tank	Purex Decanter	B Plant Decanter
Installed Cost	107	103	103	70	82
Engineering Cost (25%)	27	26	26	18	21
Subtotal	134	219	129	88	103
Contingency and Escalation (28%)[2]	37	36	36	24	29
Grand Total	170	165	165	110	130

(1) Cost estimates supplied by H. A. Zweifel, Project Management Section, Facilities Engineering Department, ARHCO.

(2) Includes 20 percent contingency and 4 percent per year escalation for two years.

UNCLASSIFIED

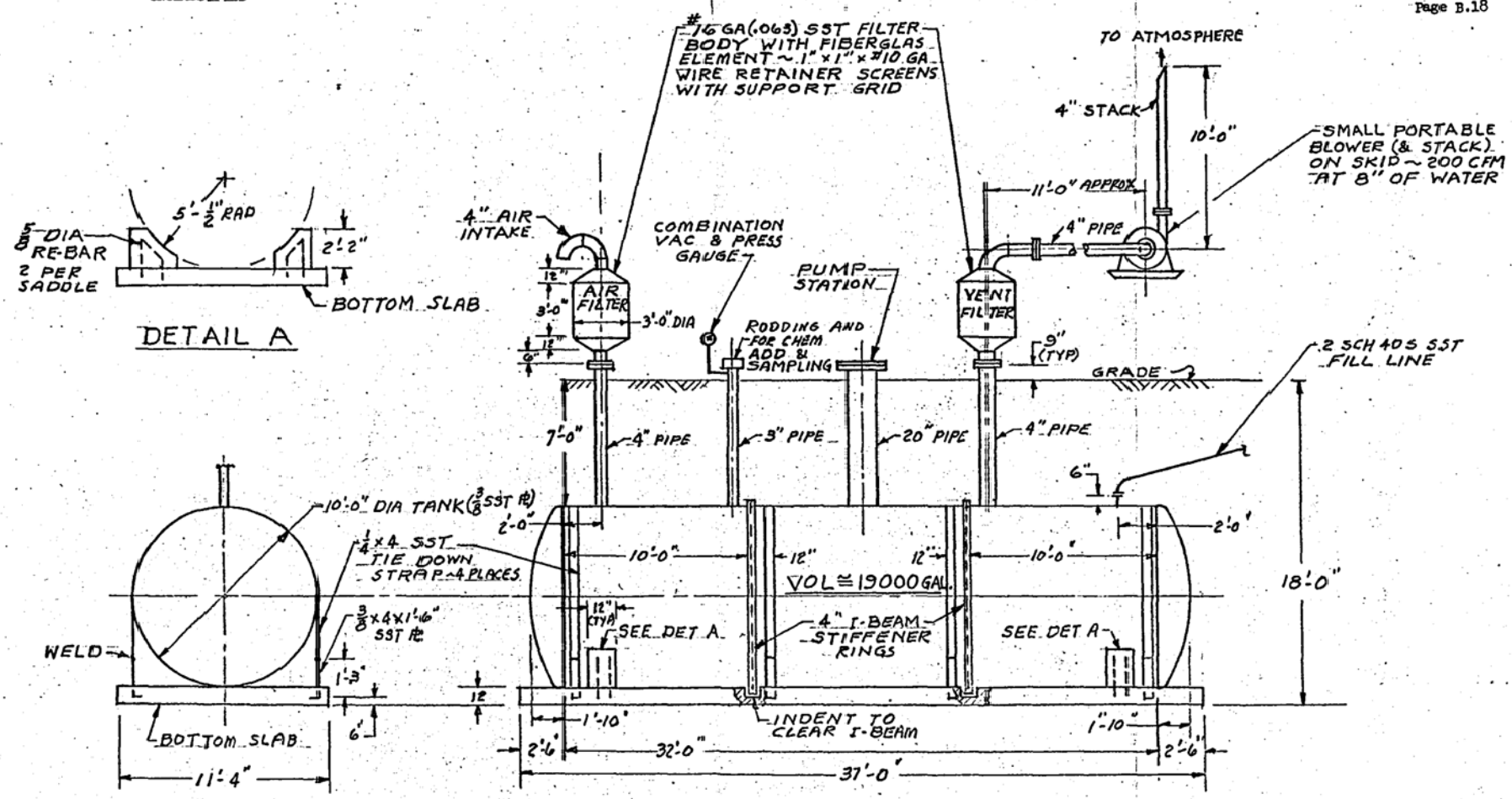

NOTE:-
1. ANCHOR PLATES SHALL BE CAST IN CONCRETE BOTTOM SLAB
2. TANK RISERS SHALL BE 304-L SST SCH 40 S PIPE
3. ABOVE GRADE FABRICATION SHALL BE 304-L SST

APPENDIX B

FIGURE 1

CONCEPTUAL DESIGN FOR ORGANIC STORAGE TANK
PLUTONIUM RECLAMATION FACILITY

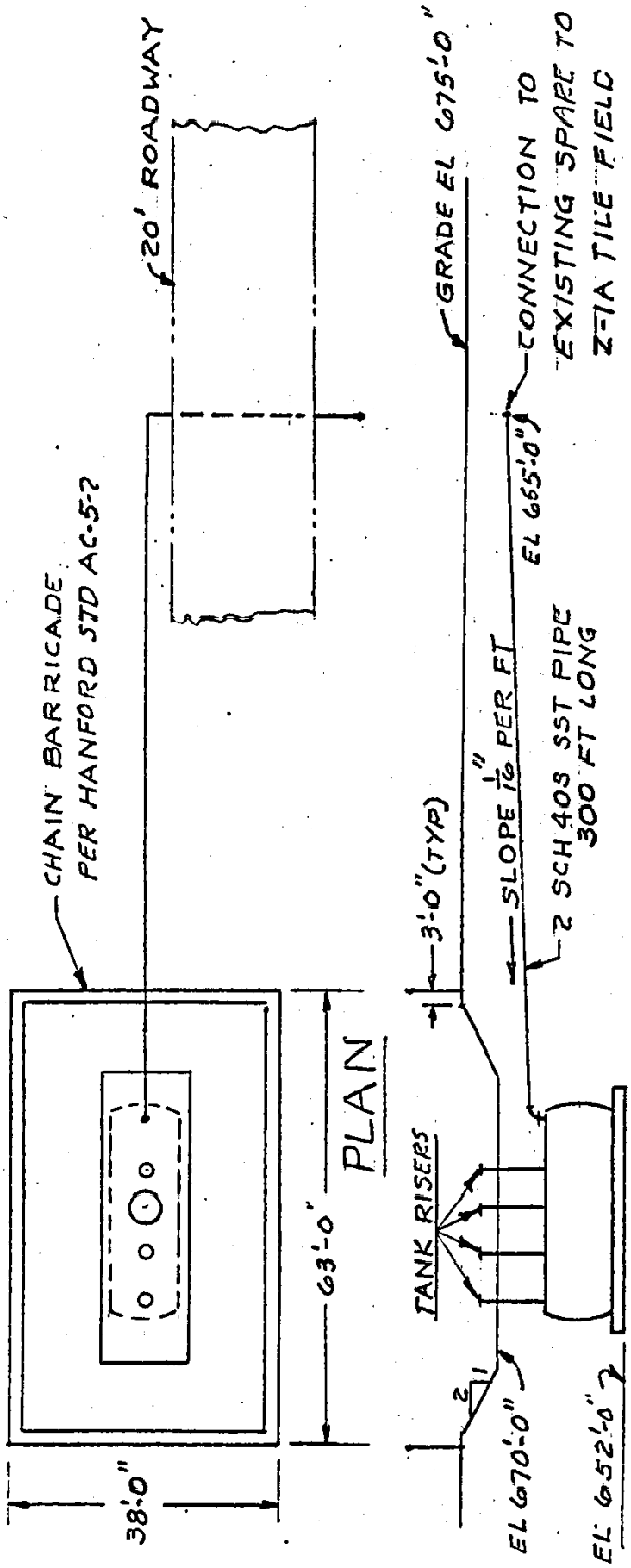

APPENDIX B

FIGURE 2

CONCEPTUAL PIPING & ORGANIC TANK PLACEMENT

PLUTONIUM RECLAMATION FACILITY

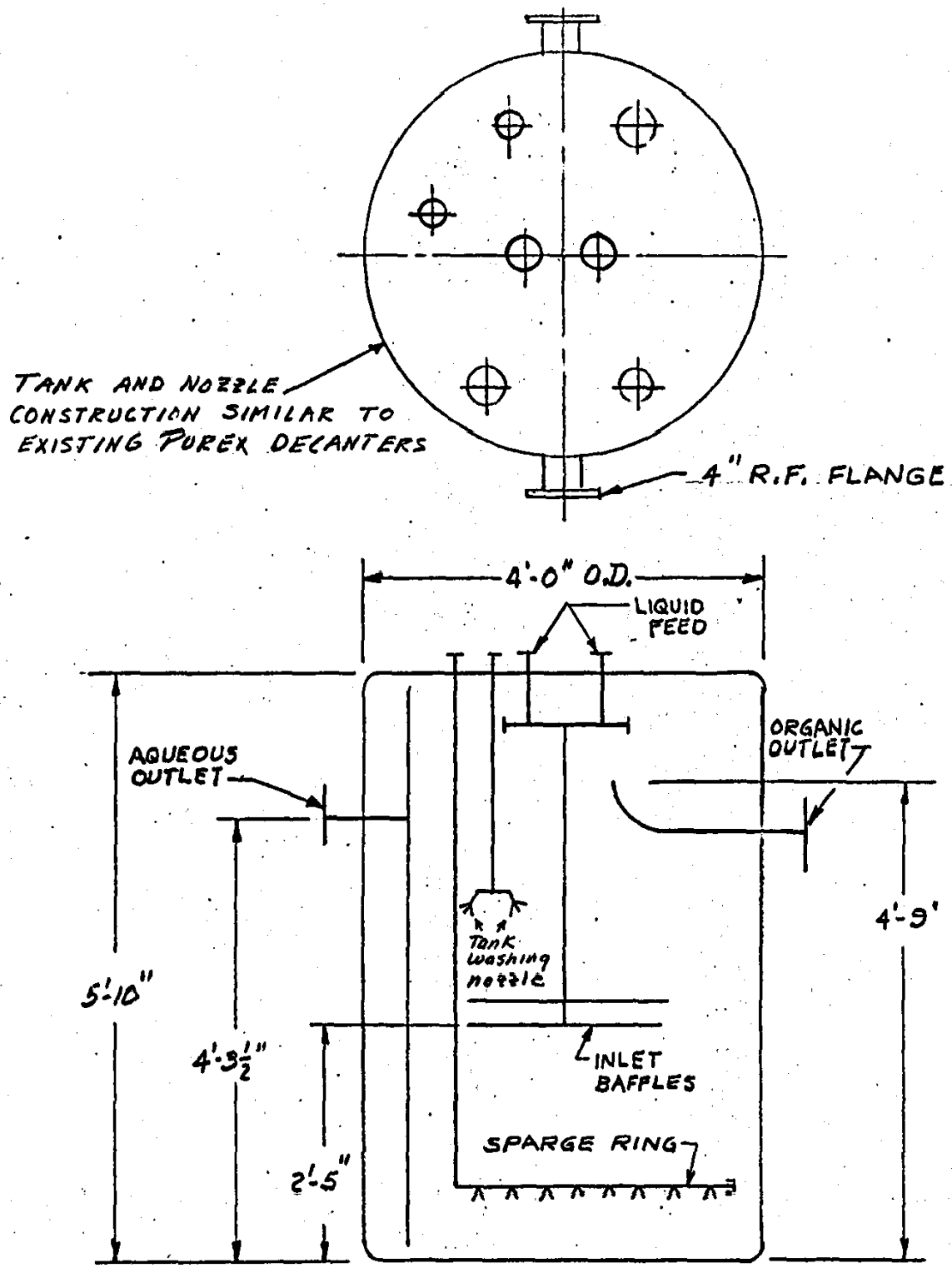

APPENDIX B

FIGURE 3

CONCEPTUAL DECANTER DESIGN

CONCEPTUAL FLOW DIAGRAM FOR PUREX DECANTER

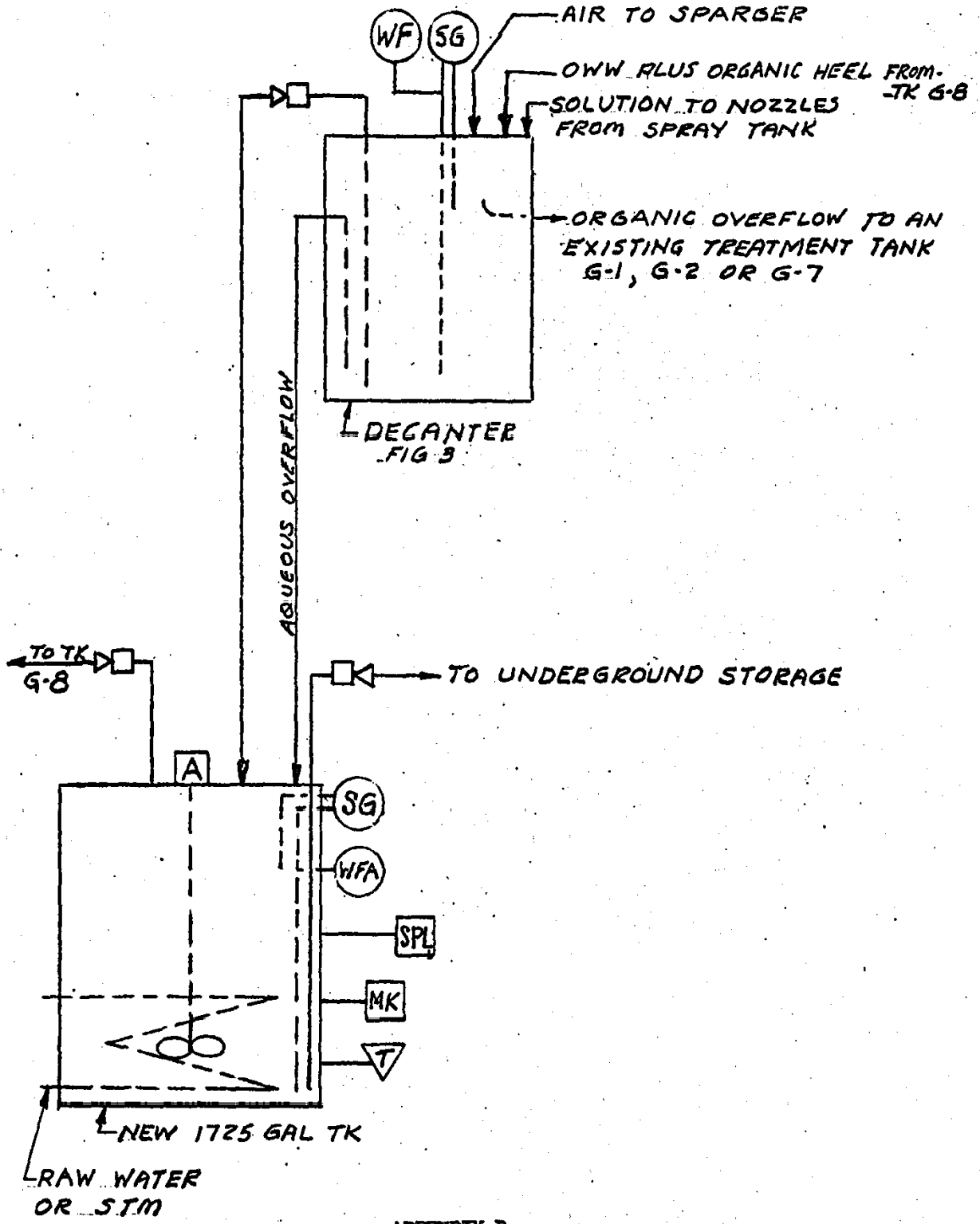

APPENDIX B

FIGURE 4

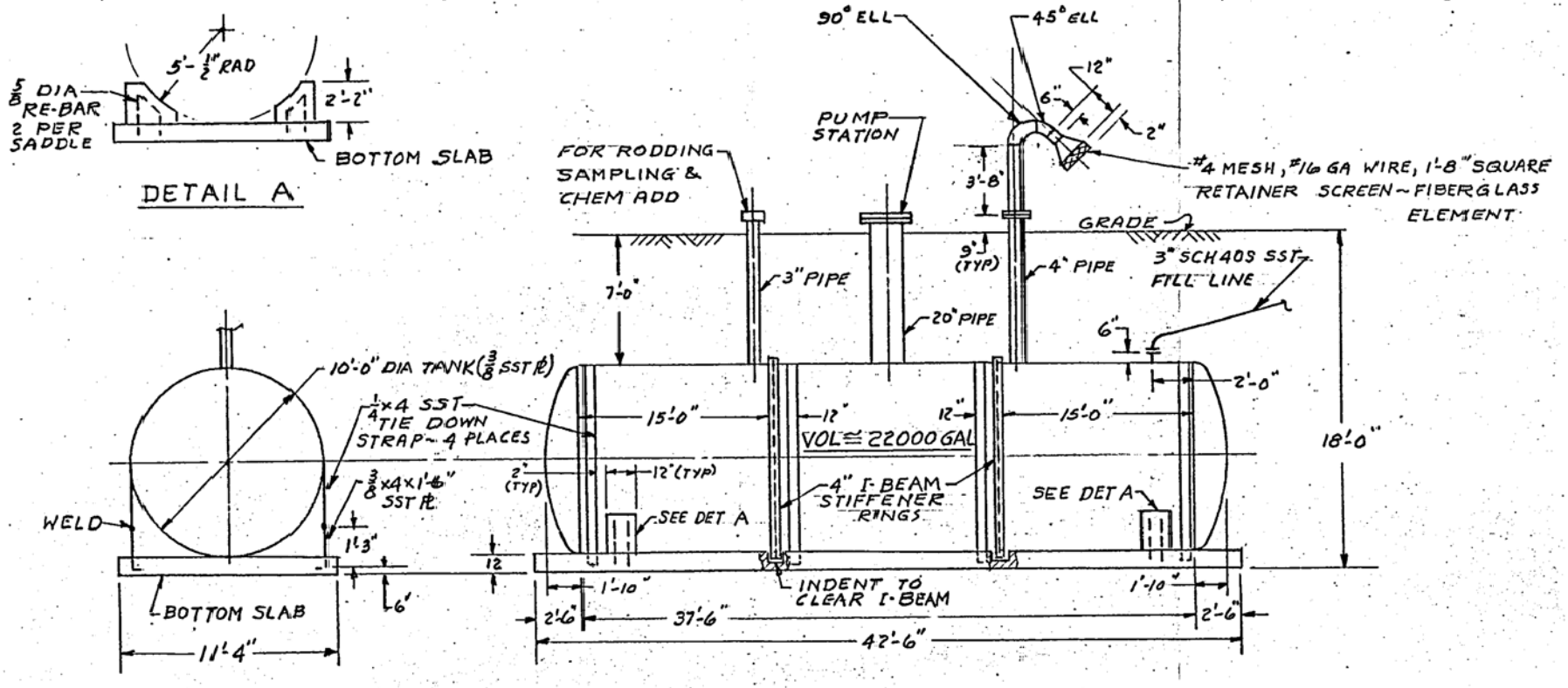

NOTE:-
1. ANCHOR PLATES SHALL BE CAST IN CONCRETE BOTTOM SLAB.
2. TANK RISERS SHALL BE 304-L SST SCH 40S PIPE.
3. ABOVE GRADE FABRICATION SHALL BE 304-L SST.
4. SEE DWG H-2-43066 FOR VENT FILTER DESIGN.

APPENDIX B

FIGURE 5

CONCEPTUAL DESIGN FOR ORGANIC STORAGE TANK
PUREX & B PLANTS

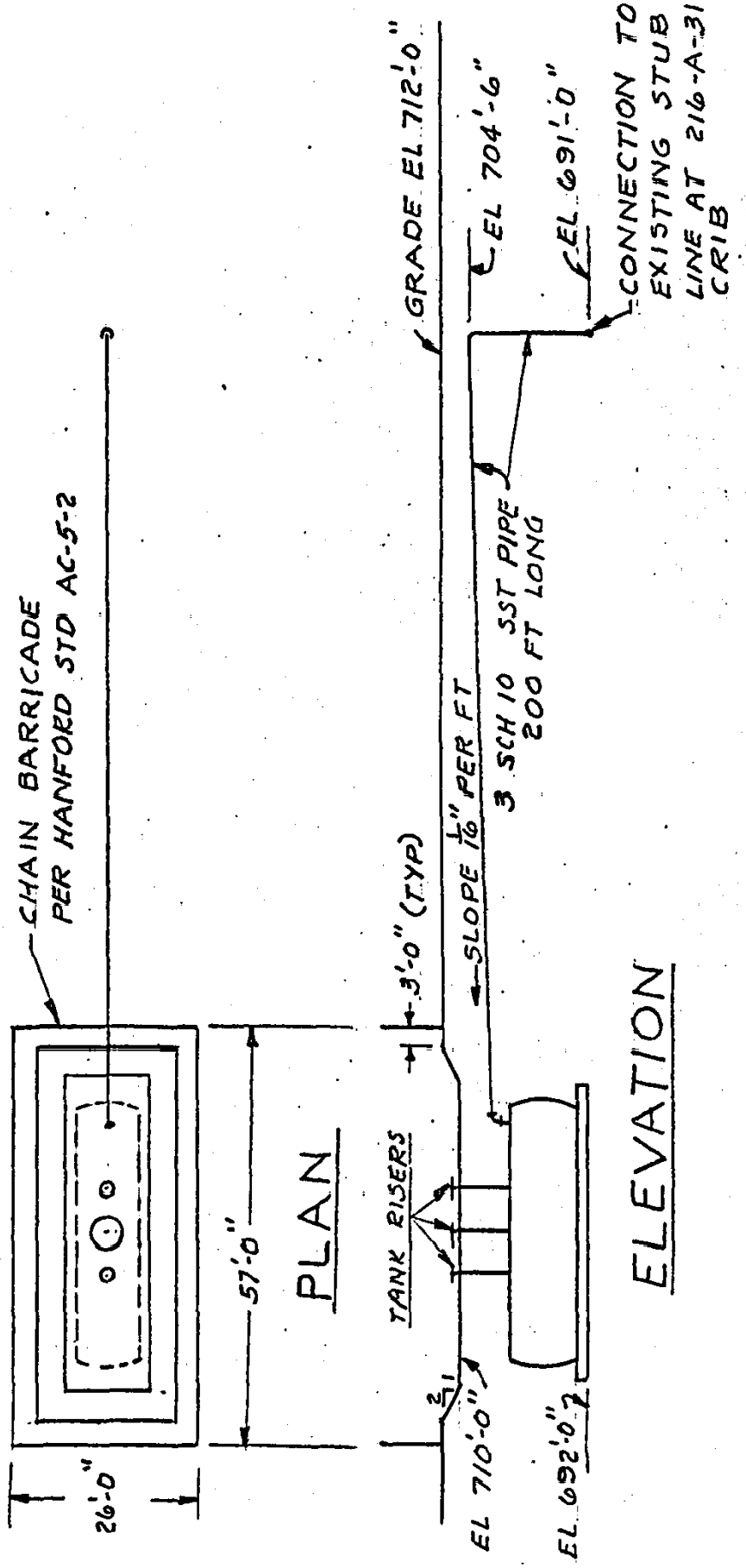

APPENDIX B

FIGURE 6

CONCEPTUAL PIPING & ORGANIC TANK PLACEMENT

PUREX PLANT

CONCEPTUAL FLOW DIAGRAM FOR B-PLANT DECANTER

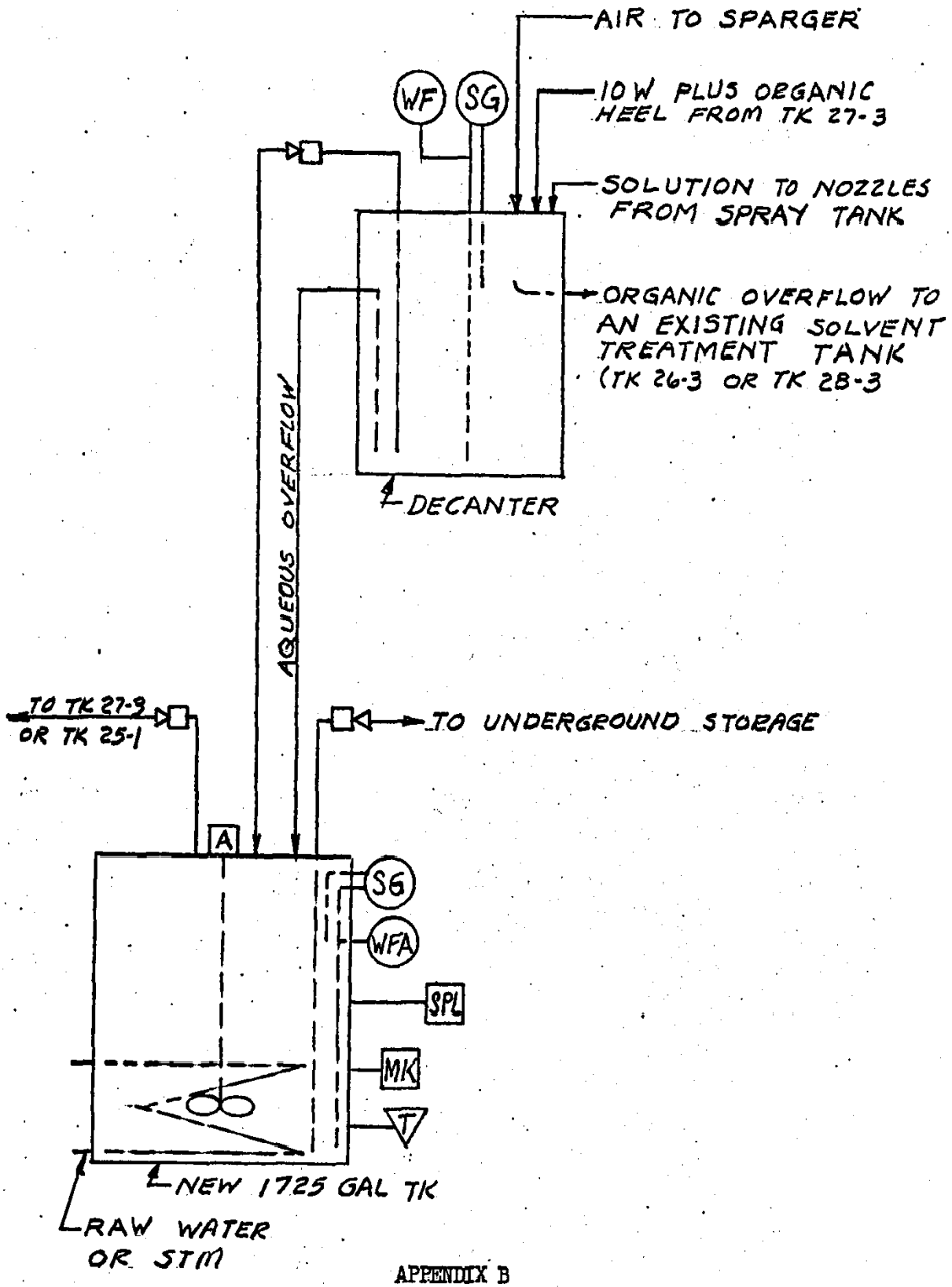

APPENDIX B

FIGURE 7

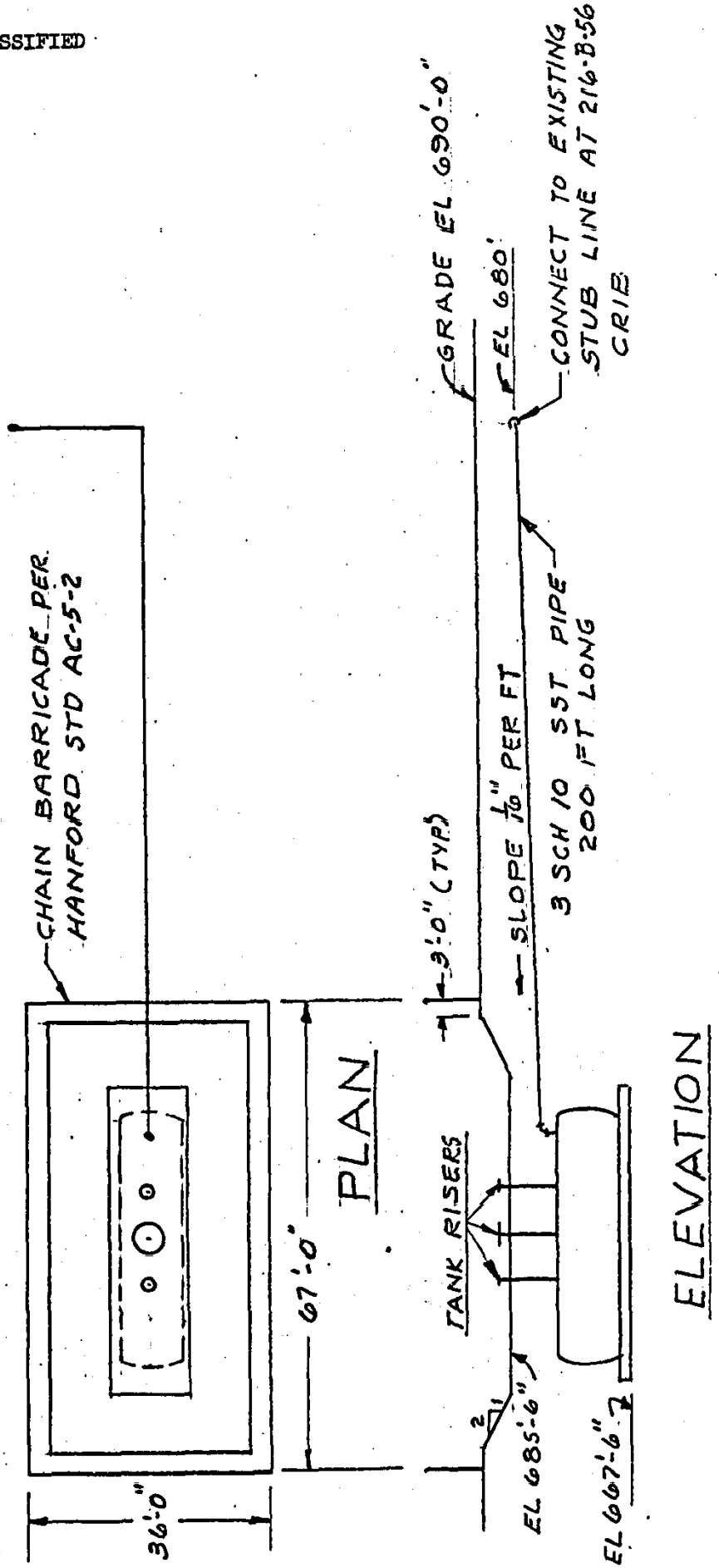

APPENDIX B

FIGURE 8

CONCEPTUAL PIPING & ORGANIC TANK PLACEMENT

B PLANT

APPENDIX C

GASEOUS WASTE TREATMENT

L. R. Michels
Facilities Engineering Department

TABLE OF CONTENTS

	Page
I. INTRODUCTION	C.2
A. Concentration Guides and Standards Iodine-131 Krypton-85 Nitrogen Oxides Plutonium-239 Strontium-90 Other Fission Products	C.2
II. PRESENT STATUS	C.4
A. Stack Discharge Concentrations	C.4
1. Nitrogen Oxides	C.4
a. Purex Plant	C.4
b. UO_3 Plant	C.6
c. 244-AR Vault	C.7
2. Iodine-131	C.7
3. Krypton-85	C.8
4. Plutonium-239, Strontium-90, and Other Fission Products	C.8
B. Concentrations at Ground Level	C.8
III. PROPOSED ACTIONS	C.9
A. Nitrogen Oxides	C.9
1. Purex Plant	C.9
a. Purex 293-A Facility Offgas Treatment	C.9
b. Treatment of Sugar Denitration Offgas	C.10
c. Other Alternates Considered	C.11
2. UO_3 Plant	C.12
3. 244-AR Vault	C.13

		Page
	B. Iodine-131	C.13
	C. Krypton-85	C.13
	D. Miscellaneous 200 Area Stacks	C.14
IV.	CAPITAL COST SUMMARY	C.14
V.	INCREMENTAL OPERATING COSTS	C.15
VI.	EXPENDITURE PATTERN	C.15
VII.	HAZARDS EVALUATION	C.16
VIII.	RESEARCH AND DEVELOPMENT	C.16
IX.	ACKNOWLEDGEMENT	C.16
X.	REFERENCES	C.17

TABLES

I.	NO_2 CONCENTRATIONS IN THE ATMOSPHERE AT GROUND LEVEL DOWNWIND FROM PRINCIPLE RELEASE POINTS IN 200 AREAS	C.18
II.	IODINE-131 AND KRYPTON-85 CONCENTRATIONS IN THE ATMOSPHERE AT GROUND LEVEL DOWNWIND FROM THE 291-A STACK	C.19
III.	STACK SYSTEM MODIFICATIONS	C.20
IV.	200 AREA STACK SYSTEMS	C.21

FIGURES

1.	HNO_3 RECOVERY FROM 293-A FACILITY OFFGAS	C.26
2.	T-F14 ABSORBER FOR SUGAR DENITRATION	C.27

[redacted] DECLASSIFIED [redacted]

APPENDIX C

ABSTRACT

Appendix C contains a review of the performance of all 200 Area processing facilities with respect to the discharge of gaseous wastes to the atmosphere. Emission guides are being met for discharge of iodine-131, strontium-90, mixed fission products and plutonium-239. Control of krypton-85 emission is generally satisfactory although calculations show that on occasion krypton concentrations offsite may exceed guides. Onsite emission of NO_2 exceeds guides under adverse atmospheric conditions. New absorption systems are defined for recovery of NO_2 from Purex dissolver offgas and sugar denitration offgas. Improved NO_2 dispersion systems may be required for the UO_3 Plant and 244-AR Vault if future stack sampling programs confirm calculated emission.

The total project cost of new facilities is about $550,000. The value of recovered nitric acid will offset increased operating costs. The net operating credit will be about $46,000 per year.

DECLASSIFIED [redacted]

[redacted] DECLASSIFIED [redacted]

APPENDIX C

GASEOUS WASTE TREATMENT

I. INTRODUCTION

In the operation of production facilities in the 200 Areas, gaseous wastes are released to the atmosphere in varying quantities and concentrations. Appendix C discusses 1) current emission limits for the various contaminents, 2) the present status or performance of 200 Area process systems with respect to gaseous wastes, 3) proposed corrective actions along with other alternates considered, 4) incremental capital and operating expenses along with an expenditure pattern for the next several years, 5) brief hazards evaluation, and 6) the required research and development program.

The Appendix C survey has reviewed all of the process stacks within the 200 Areas. These stacks are listed in Table IV with information on location and process function. A more complete description of the various 200 Area systems for treatment of gaseous effluents is provided in Reference 1. The Appendix C study, however, is limited to separations facility process and/or ventilation stacks. Powerhouse stacks and burning pits are not included and are beyond the scope of this investigation.

A. Concentration Guides and Standards

The Atomic Energy Commission has established criteria for release of chemical and radiochemical substances of concern, namely iodine-131, krypton-85, plutonium-239, fission products and nitrogen dioxide. These published criteria are for dose rates to people in restricted and unrestricted areas.

These criteria are as follows:

Permissible Dose Rates

Critical Organ	Contributing Isotope	Permissible Dose Rates - rem/Year		
		Restricted Areas	Individual and Small Population Groups Near Facilities	Large Population Groups
Thyroid	Iodine-131	30	1.5	0.5
Whole Body	Krypton-85	5	0.5	0.17
Bone	Plutonium-239	30	1.5	0.5
Bone	Strontium-90	30	1.5	0.5
Lungs	NO_2	5 ppm	5 ppm	5 ppm

NOTE: Permissible dosages are not additive.

DECLASSIFIED [redacted]

[redacted]

[redacted]

APPENDIX C

DECLASSIFIED

Iodine-131

Relating the above dose rates to stack release rate is very difficult. However, this relationship was established by the General Electric Company Hanford Laboratories for iodine-131 by means of the food chain through milk and eventually to a child's thyroid. This led to establishment by the local Commission of a stack emission rate of 5 Ci/week for all Hanford 200 Areas and no more than 3 curies/week from a single 70 meter stack. This release assures that individuals in unrestricted areas will receive less than 10 percent of the allowable 1.5 rems/year.

Krypton-85

The maximum permissible concentration (MPC) of krypton-85 in the air at ground level, as established by AEC Manual Chapter 0524, is 3×10^{-7} uCi/ml. At present emission rates, the krypton-85 concentration at a distance of 13 miles from plant stacks has been calculated to be about 3×10^{-8} uCi/ml, or roughly one-tenth the permissible breathing limit. At a distance of only 5 to 7 miles, the dilution factors are about one-tenth as great and the concentrations at ground level raise to 3×10^{-7} uCi/ml. The data indicate that for the present release rate some individuals in the population surrounding Hanford Project may occasionally breathe air which is above the breathing guide for krypton-85. However, because of the variable atmospheric conditions in the general region, it is extremely unlikely that these same individuals are exposed for a period of time sufficient to give them an exposure equal to one-tenth the yearly total body dose of 0.5 rems/year.

Nitrogen Oxides

As shown in the preceeding table, the NO_2 concentration guide in air at ground level is five parts per million both for restricted and non-restricted areas. The 5 ppm limit is a ceiling which should not be exceeded even for short periods of time. Above five parts per million some lung damage may occur.

The dispersion of NO_2 and other contaminents into the atmosphere from stacks is influenced by the following factors: a) stack height, b) mass rate of the contaminents, c) stack carrier gas flow rate, d) the presence of building obstructions near the stack, and e) general atmospheric conditions such as wind velocity, inversions, etc. Under adverse atmospheric conditions involving inversions, the concentration of a contaminent at ground level near the stack is influenced largely by stack height and mass flow rate of the contaminent. As shown in correlations in Reference 2, the carrier gas flow rate (or concentration of the contaminent in the carrier gas) has only a very minor effect under adverse conditions. Obviously contaminents can be diluted to safe concentrations within a stack system, if sufficient dilution air can be injected into the stack and dispersion from the stack is not relied upon. This is not always practical, however.

DECLASSIFIED [redacted]

[redacted]

[redacted]

DECLASSIFIED

According to the Reference 2 correlation, the peak allowable NO_2 emission rate from the 200-foot Purex 291-A stack is about 90 pounds per hour under adverse conditions. The corresponding calculated NO_2 concentration limit is therefore about 100 parts per million in the 120,000 CFM stack discharge stream, with 5 ppm NO_2 near the base of the stack.

Plutonium-239

The stack emission guide for plutonium-239 has been established at 1×10^{-3} curies per week from a 200-foot stack or 1×10^{-4} curies per week from a short stack or roof vent.

Strontium-90

The stack emission guide for strontium-90 has been established at 0.1 curies per week from a 200-foot stack and 0.01 curies per week from a short stack or roof vent.

Other Fission Products

The emission guide for all other fission products and isotopes except tritium and carbon-14 has been established as 2 curies per week from a 200-foot stack and 0.2 curies per week from a short stack or roof vent.

II. PRESENT STATUS

A. Stack Discharge Concentrations

1. Nitrogen Oxides

Oxides of nitrogen are released to the atmosphere routinely from chemical processing facilities in the 200 Areas. Currently less than 10 percent of the time, only the Purex Plant and the UO_3 Plant release NO and/or NO_2 in sufficient concentrations to be of any concern. The NO and NO_2 emitted from Purex and the UO_3 Plant stacks are dispersed by the atmosphere to the extent that they do not present a hazard to offsite personnel beyond the barriers of the Hanford Project. However, less than 10 percent of the time the maximum concentration of NO_2 at ground level near Purex and the UO_3 Plant may occasionally reach 60 and 9 ppm, respectively, 2 to 10 times the limit established by the Atomic Energy Commission for both restricted and unrestricted areas.

a. Purex Plant

Uranium dissolving and waste solution sugar denitration are the two primary operations at the Purex Plant which liberate NO and NO_2.

In the dissolution step, uranium reacts with nitric acid. The NO-NO_2 offgas, along with carrier air, is routed

DECLASSIFIED

[redacted]

[redacted]

[redacted]

DECLASSIFIED

through the offgas train comprising an in-canyon downdraft condenser knock-out pot, heater, silver reactors and filters. Offgas is then routed through two absorbers in series in the 293-A Facility prior to discharge to the 291-A Stack. Oxides of nitrogen are converted back to nitric acid both in the downdraft condenser and the absorbers. However, the conversion is not complete at current dissolution rates. Data indicate that nitrogen oxides equivalent to about 1200 tons of nitric acid per year are discharged from the Purex stack at current production rates. This acid is worth about $63,000 per year.

The concentration of NO and NO_2 has been measured at the discharge of the T-XB final absorber of the 293-A Building, during conditions when two dissolvers were on "cuts" at peak dissolution rates. Combined NO + NO_2 was six volume percent with the flow rate 1400 SCFM. When this gas was diluted with 120,000 SCFM of ventilation exhaust air in the stack, the NO - NO_2 content of stack discharge gas was 0.07 percent or 700 parts per million. This is a factor of 7 above the stack emission limit, without consideration of the increment from sugar denitration.

In the processing of high level radioactive wastes in Purex F-cell operations, sugar is added to the waste to destroy the nitric acid. Removal of nitric acid by this means reduces caustic requirements for neutralization thereby permitting a reduction in volume of the high level waste for eventual storage.

During the sugar denitration step, nitrogen oxides are produced. Although actual gas composition data are not available, the composition estimated from stoichiometry is approximately 26 percent NO-NO_2, 10 percent H_2O vapor and 64 percent air. The offgas rate is about 100 SCFM. Offgas from TK-F15 and F16, the sugar denitration vessels, is discharged into the E-F6 concentrator; noncondensed vapor then flows to the E-F5 rectifier and condenser via the E-F6 demister. It is estimated that 25 percent of the NO-NO_2 liberated in sugar denitration is converted to nitric acid in the E-F5 condenser. Residual oxides of nitrogen from E-F5 pass through the offgas condenser, heater, silver reactor and filter of the process vent system prior to discharge to the Purex stack. After dilution in the stack, the NO-NO_2 concentration increment from sugar denitration offgas is about 160 parts per million. Total concentration of NO-NO_2 in the Purex stack from both dissolving and denitration is therefore estimated at 860 parts per million, roughly an order of magnitude above the stack discharge limit.

DECLASSIFIED [redacted]

[redacted]

DECLASSIFIED

The value of the oxides of nitrogen from sugar denitration in terms of nitric acid equivalent is estimated at about $6,000 per year.

b. UO_3 Plant

In the UO_3 Plant, uranium nitrate hexahydrate solution is concentrated to 100 percent UNH and the concentrate is pumped to trough calciners where the UNH is converted to uranium trioxide, with the liberation of NO, NO_2 and water vapor. Calciner offgas is routed through wet scrubbers to the T-A3 absorber where roughly 93 percent of the oxides of nitrogen are converted to nitric acid. Tail gas from the absorber passes through a jet to the B-3 condenser and is discharged through the UO_3 Plant stack. Offgases from the UO_3 Plant vessel vent system and UNH concentrators are also discharged to this stack via the B-3 condenser.

The UO_3 Plant stack is 8 inches in diameter and extends 80 feet above the roof of the 224-U Building, or about 110 feet above grade level. Air is blown into the base of the stack to dilute the nitrogen oxide offgases.

Past attempts to sample the UO_3 Plant stack for NO and NO_2 have not been successful owing to high moisture conditions in the stack. From material balance calculations around the calcination system it is estimated that the equivalent of about 111 pounds of nitrogen oxides (expressed as NO equivalent) per hour are discharged from the T-A3 absorber when all six calciners are in operation. Total flow through the UO_3 Plant stack has been measured recently at about 3600 cubic feet per minute. The calculated NO-NO_2 emission concentration is therefore about 0.4 volume percent or 4,000 parts per million. Under adverse atmospheric conditions, the NO-NO_2 concentration at ground level near the UO_3 Plant is calculated at about 57 parts per million or roughly a factor of about 12 above present guides. A portion of the nitrogen oxides may be emitted as entrained nitric acid, however, since an acid "rain" condition has been noted on occasions during cold weather.

The value of all nitrogen oxides released to the atmosphere from the UO_3 Plant, in terms of 100 percent HNO_3, is about $6,000 per year.

As noted above, acid droplets fall from the UO_3 Plant stack to the ground in the general UO_3 Plant area under adverse weather conditions. This condition is attributed to entrainment from the B-3 condensers along with condensation and high gas velocity in the UO_3 Plant stack. Present gas velocity in the stack is about 10,000 feet per minute and calculated pressure drop due to friction is about 13 inches H_2O per 100 feet of stack height.

DECLASSIFIED [redacted]

[redacted]

APPENDIX C

DECLASSIFIED

c. 244-AR Vault

The 244-AR Vault, a new facility located near the Purex Tank Farm, will be used for the mining and dissolution of sludges from waste tanks and for routing of wastes between Purex, B Plant and the tank farms. Construction is nearing completion and hot startup is planned for December, 1967.

In the AR Vault, sludges are accumulated from the hydraulic mining operations. These sludges which contain a significant fraction of sodium nitrate will be acidified in Tank 005. On acidification, large quantities of NO and NO_2 will be liberated to the process vent system of the vault. The vent system will route TK-005 offgas, along with offgas from other vault tanks, through a heater, two high efficiency filters in series, a 500 CFM 12-inch H_2O S.P. blower to atmosphere via a 6-inch diameter by 150-foot high stack.

Data on the nitrate composition of Purex tank farm sludges is difficult to obtain. Limited sampling to date shows a significant variation in sludge composition from tank to tank. Since the acidification step has not been verified on a pilot plant scale, only rough estimates can be made of the peak NO-NO_2 evolution rate. For a design basis, the peak stack discharge rate and offgas composition have been selected at 500 SCFM and 2.5 volume percent (25,000 ppm), respectively. However, the acidification procedure will be optimized after startup and firm data on the offgas system can be obtained at that time.

For the currently postulated acidification procedure, the NO-NO_2 concentration at ground level near the stack, under adverse atmospheric conditions, should be about 11 parts per million using the Reference 2 calculation procedure. This would be a factor of 2 above guides.

2. Iodine-131

With the shutdown of the Redox Plant in January, 1967, the Purex Plant is the only remaining facility in which uranium dissolution operations are performed. Large quantities of iodine-131 are released from the uranium metal matrix during the dissolution step. Although the bulk of the iodine remains in the dissolver solution, about one-quarter is released to the offgas system. In this system, volatile and entrained iodine is removed by the silver reactor, filters and 293-A Facility acid absorbers in the dissolver offgas train. Offgas from other vessels containing process solution and waste is routed through the F Cell process vent silver reactor - filter system for iodine removal. Dissolver offgas and process vent offgas are routed to the 291-A Stack where they are diluted by Purex ventilation exhaust before discharge to the atmosphere. The Purex 291-A stack gas is monitored continuously for iodine content.

DECLASSIFIED [redacted]

[redacted]

[redacted]

DECLASSIFIED

Iodine-131 emissions from the Purex stack are routinely held below three curies per week. The average emission to date during 1967 has been 0.063 curies per week. Only on two occasions during 1967 has the weekly release exceeded three curies, with the peak release being 4.3 curies per week.

High level waste solution (PAW) from the Purex Plant is to be routed to B Plant via the AR Vault late in calendar year 1967 for the removal of strontium-90 by solvent extraction. The PAW solution will contain a significant concentration of iodine-131. Although iodine liberation from the AR Vault and B Plant solutions is not believed to be a problem, special offgas sampling will be performed to confirm that iodine emission is within established guides.

3. Krypton-85

As mentioned previously, krypton-85 emission to unrestricted areas from the Hanford Project is calculated to be generally within appropriate guide lines. However, Purex stack gas is not routinely monitored for krypton, nor is the krypton concentration in air monitored in unrestricted areas. To date an effective gas sampler has not been developed which will permit routine monitoring of krypton offsite. There is a possibility that some individuals in the population surrounding the project area could occasionally be exposed to krypton-85 concentrations at or above the established guides.

To date there is no evidence to indicate undue exposure of project personnel to krypton in restricted zones in the 200 East Area. Krypton exposure to plant personnel can be detected by present health badges.

4. Plutonium-239, Strontium-90, and Other Fission Products

Emission of particulate isotopes of plutonium, strontium and other fission products from 200 Area stacks has generally been held within guides and does not currently present a problem to either onsite or offsite personnel.

B. Concentrations at Ground Level

Table I presents calculated values of the NO_2 concentrations at the ground surface, downwind from the three major release points in the 200 Areas - the Purex 291-A Stack, the UO_3 Plant stack and the AR Vault process vent stack.

Table II shows the calculated concentrations of krypton-85 and iodine-131 at ground level downwind of the Purex stack. The microcurie per milliliter values in Table II may be related to equivalent dose rates by the following relationships:

DECLASSIFIED [redacted]

[redacted]

DECLASSIFIED

[redacted]

Isotopes	Air Concentration (Continuous Yearly Exposure) uCi/ml	Yearly Dose rem	Allowable Yearly Dose to Individuals Near Facilities rem
Krypton-85	3×10^{-8}	0.05	0.5
Iodine-131	1×10^{-11}	0.15	1.5

The data in Tables I and II do not take cognizance of wind direction. About 41 percent of the time during the year the wind blows from the WNW and NW directions. Such winds would confine the puffs reaching ground level to the ESE and SE sectors away from the respective stacks.

III. PROPOSED ACTIONS

A. Nitrogen Oxides

1. Purex Plant

The concentration of NO-NO_2 discharges from the Purex stack must be reduced by roughly a factor of 10 to comply with the calculated 100 ppm stack emission guide. Arbitrarily, it is planned to reduce the concentration of NO-NO_2 from the T-XB absorber from the peak value of six volume percent to 0.2 volume percent and to reduce the concentration in the sugar denitration offgas from 20 to 5 volume percent. Equipment to process T-XB discharge is to be sized for a flow of 2000 SCFM, equivalent to two dissolvers at peak dissolution rates and the third dissolver at a low dissolution rate. For this design basis, peak NO=NO_2 discharge concentration from the Purex stack from both sources would be about 75 parts per million, which is somewhat under the current stack guide.

a. Purex 293-A Facility Offgas Treatment

A new absorber system is planned to convert the T-XB Tower nitrogen oxide discharges into nitric acid, for recycle. The conceptual design is shown in Figure 1. Absorption will be performed under pressure, in contrast to the present 293-A absorbers which operate at 5 psi vacuum. The new facility will be located as close to 293-A as possible.

Offgas from the T-XB absorber is compressed to about 110 psig in a new 700 HP nonlubricated stainless steel compressor. Currently, the Joy Manufacturing Company makes a standard three-stage centrifugal compressor which appears feasible for this service. Compressor discharge passes through an aftercooler and separator for removal of a portion of the recovered nitric acid. Compressed gas is then fed to the bottom of a

DECLASSIFIED

[redacted]

[redacted]

DECLASSIFIED

20 to 25 tray absorber where it is contacted counter-currently with recycle weak acid and water reflux. Cooling coils are provided on each tray. The absorber will be about 3 feet in diameter by 30 feet high. Absorber offgas is routed back to the T-XB gas discharge line for discharge through the present 293-A dissolver offgas jets. Product 10 percent HNO_3 recovered from the new absorber drains to the existing TK-XD rundown tank and is pumped back to the 202-A Building, via existing tank TK-XC. A new 1000-gallon tank and pumping system are required to feed demineralized water reflux to the absorber at 100 psig. Gas bypass connections shown in Figure I permit the compressor to idle at low horsepower during periods of low gas flow and also permit bypass of gas around the entire new absorber system upon emergency. The new compressor and absorber are housed in a new concrete structure with walls about one foot thick. The facility is to be operated from the Purex headend control room.

The project cost of the above facility is estimated at about $360,000 including a 28 percent contingency. No additional operators are required. Acid worth about $60,000 per year will be recovered for reuse.

b. Treatment of Sugar Denitration Offgas

A new absorber is planned for recovery of nitrogen oxides from the sugar denitration system. As shown in Figure II, offgas from Purex tanks F-15 and F-16 is routed to a new gas cooler and absorber, which are located in the F-14 position. Gas discharged from the new absorber is routed back to the E-F6 concentrator, the present routing. The new absorber will be 2.5 feet in diameter by 17 feet high, will contain water cooled trays and will operate at about 14 psia. Recovered 10 weight percent nitric acid will drain by gravity to the E-F6 concentrator system. Owing to a lack of head room in the Purex canyon, only about 8 trays can be provided in a single absorber; this limits the absorber tail gas concentration to about 5 volume percent.

The F-14 position is currently occupied by the F-14 decanter, which currently leaks and is nonoperable. The new gas cooler-absorber system for F-14 must allow space and canyon services for a replacement decanter which could be installed remotely at a later date.

The project cost for the new F-14 absorption system including jumper and controls, but excluding the replacement decanter, is about $95,000 including a 28 percent contingency. The unit will be operated from the central control room and no additional operators will be needed.

DECLASSIFIED

[redacted]

[redacted]

DECLASSIFIED

c. Other Alternates Considered

Other alternates considered for treating nitrogen oxides at Purex are as follows:

(1) Low Pressure Absorber for T-XB Offgas

Additional large diameter absorbers operating at 5 psig vacuum could be installed in series with T-XA and T-XB. This alternate would be more costly since many additional towers would be required. Currently, only about 50 percent recovery of nitric acid is obtained in the two-tower T-XA - T-XB system.

High pressures favor both the equilibrium and kinetics of nitrogen oxide absorption, permitting the use of smaller absorption equipment.

(2) Routing of Denitration Offgas to the 293-A Facility

This alternate was rejected because a) the oxides of nitrogen from T-F15 and F-F16 would not be decontaminated sufficiently from fission products to permit mixing with dissolver offgas in 293-A without providing a new filter or increasing the shielding, b) a convenient gas routing from the canyon to 293-A is not available, and c) the system would be expensive.

(3) Dilute and Disperse to the Atmosphere

This alternate would require the rerouting of the F cell vessel vent and 293-A offgas systems to a new stack with an air flow of about 1.5 million standard cubic feet per minute, assuming a stack 200 feet high. It would be difficult to mix the various offgas and ventilation streams into the 1.5 million CFM air dilution stream to assure a uniform stack gas with 100 ppm of NO_2. Alternatively, rerouting and diluting of the present 291-A stack gas into the new large capacity system would present major technical problems and would be costly. Further, there would be no reduction in NO_2 emission from the largest current source in the 200 Areas.

(4) Compression of Nitrogen Oxides

Data in Reference 3 indicate that NO and NO_2 are converted to nitric acid almost quantitatively in a 900 psig compressor-after-cooler system. This system would eliminate the need for a high pressure absorber. However, commercial nonlubricated compressors are not currently available which operate above about 400 psig. Use of lubricated compressors would require neutralization and disposal of the recovered acid, which are undesirable.

DECLASSIFIED [redacted]

[redacted]

[redacted]

APPENDIX C

DECLASSIFIED

2. UO_3 Plant

As noted earlier, the currently indicated $NO-NO_2$ concentration at ground level near the UO_3 Plant under adverse atmospheric conditions is roughly a factor of 12 above current limits. A firm action plan to improve facilities must await improved sampling information; the stack entrainment problem must be rectified to permit improved sampling. The following stepwise initial program is proposed:

a. Install a 2-foot diameter by 3-foot high deentrainer immediately downstream of the B-3 condenser to remove acid droplets entrained from the condenser.

b. Disconnect the blower, which currently injects dilution air into the base of the UO_3 stack, or throttle the flow. The dilution air is of dubious benefit with respect to improving dispersion under adverse conditions; the current high stack gas velocity contributes to the HNO_3 "rain" problem.

c. Sample the stack offgas and determine stack gas flow rate to provide direct measurement of $NO-NO_2$ evolution.

d. Reevaluate the problem.

If the data obtained in this program substantiate the present overall material balance and indicate that 111 pounds per hour of $NO-NO_2$ truly are liberated, independent of HNO_3 "rain," a new 8-inch diameter 275-foot high stack is recommended. The overall system would comprise the deentrainer, the new stack and connecting duct work. With this stack, $NO-NO_2$ concentration at ground level would generally remain below 5 ppm under adverse conditions.

The total capital cost for the deentrainer, stack and connecting duct is about $35,000 including design and contingency.

Alternates to the above system are as follows:

a. Use of Existing T-A1 Absorber with the 291-U Stack

Previous calculations made by Research and Engineering and Facilities Engineering personnel have indicated that if the spare T-A1 absorber tower were installed in series with T-A3, roughly half the acid values currently discharged to the stack could be recovered. Thus, only about 56 pounds of $NO-NO_2$ per hour would be discharged. This gas could be routed to the present 200-foot 291-U stack and diluted by the 30,000 CFM of U Plant canyon ventilation air. With this system the $NO-NO_2$ concentration near the base of the stack under adverse conditions would be about 4 parts per million, which would be within guides.

The project cost for this alternate would be about $60,000 which includes $40,000 for reactivation of the T-A1 absorber.

DECLASSIFIED

[redacted]

[redacted]

DECLASSIFIED

3. 244-AR Vault

It is recommended that design planning for additional 244-AR Vault NO_2 treatment facilities be deferred until early in calendar year 1968 when direct operating data can be obtained and stack gas can be sampled.

If the stack gas sampling confirms the design basis of 500 SCFM flow and 2.5 volume percent NO-NO_2, it is proposed that the 6-inch stack be modified to increase the height from the present value of 150 feet to 230 feet. The capital cost for this stack modification (or replacement) is about $30,000 including design and contingency. This modification will reduce NO-NO_2 concentration near the base of the stack to 5 ppm under adverse conditions.

Alternate NO_2 absorption systems were also considered for the AR vault offgas. These alternates were rejected since project costs would exceed that for the dispersion system. Chief deterrent to the absorption approach is the wide rangeability of NO_2 gas concentration during the batch sludge acidification operation. This would result in the production of very dilute nitric acid. Storage, use and/or disposal of this dilute acid would be costly to the Waste Management Program.

B. Iodine-131

As noted in Section II, iodine emission from the 200 East and 200 West Area facilities is currently maintained below the 5 curie per week limit. Accordingly, no new facilities are planned at this time for iodine control. Iodine emission will be monitored closely during startup operations for the AR vault and Phase III B Plant to assure that present facilities are adequate.

Should more stringent iodine emission limits be invoked in the future for 200 Area facilities, additional lag storage of irradiated fuel should be considered in preference to large capital expenditures.

C. Krypton-85

Krypton-85 dispersion from the Purex 291-A stack is generally adequate although krypton concentration in the air offsite is close to guides occasionally. Accordingly, new facilities for control of krypton emission are not planned at this time.

If emission limits should become more restrictive in the future, krypton recovery equipment for dissolver offgas would be required. Because of the large quantity of offgas and low concentration of krypton-85, a cryogenic distillation process at liquid air temperatures would be indicated in preference to a low temperature adsorption process. Both processes recover fission xenon, however, in addition to the krypton. Reference 3 provides a 1958 process design of cryogenic krypton-xenon removal facilities at Purex.

DECLASSIFIED

[redacted]

[redacted]

DECLASSIFIED

Capital cost of these facilities, with escalation to 1967, is in the range of $2,500,000 to $3,000,000. These facilities would include equipment for recovery of essentially all of the NO-NO_2 in addition to the krypton and xenon rare gases.

The Atomic Energy Commission is currently reviewing a proposal, Reference 4, for updating the Reference 3 process design. The proposal indicates that recovery, sale and/or utilization of 90 percent of the above constituents would provide potential revenue of about $800,000 per year if sale prices of 20 cents per curie of krypton-85 and $3 per liter of xenon are assumed along with a purchase price of $53 per ton for makeup nitric acid. The current krypton-85 price, as established by Oak Ridge National Laboratory, is $22 per curie. The current commercial xenon price ranges from $13 to $35 per liter, depending on the quantity purchased.

It would appear that integral facilities provided at Purex for recovery of NO_2, krypton and xenon would not only reduce atmospheric pollution but could have a reasonable economic payout on development of the fission rare gas market.

D. Miscellaneous 200 Area Stacks

Proposed modifications to the 200 Area stack systems, in addition to the NO-NO_2 control facilities described above, are listed in Table III. Most of the modifications in Table III are currently in the planning or design stage and will be provided under budgeted FY 1968 and 1969 operating funds. Only those modifications marked with an asterisk would be provided in a new future "Gaseous Effluents Control" project. These modifications include alarms for the 241-A, 224-AR process vent, and 244-AR vault ventilation stacks, along with a monitor, recorder and alarm for the 231-Z Building stack. The total project cost of the above modifications is estimated at $20,000 including design and contingency.

IV. CAPITAL COST SUMMARY

Capital costs for new facilities to control gaseous effluents are summarized below. These costs do not include those modifications identified in Table III which are to be provided under the FY 1968 and FY 1969 operating budget.

		Project Cost
1.	Purex 293-A High Pressure NO-NO_2 Absorber Facility	$ 360 000
2.	Purex F-14 Absorber System for Sugar Denitration Offgas	95 000
3.	UO_3 Plant Stack Modifications	35 000

DECLASSIFIED

[redacted]

[redacted]

[redacted]

APPENDIX C

DECLASSIFIED

	Project Cost
4. 244-AR Stack Modifications	$ 30 000
5. Miscellaneous Stack Modifications	20 000
Total Project Cost	$ 540 000

V. INCREMENTAL OPERATING COSTS

Incremental operating costs will arise 1) in supplying power to the compressor for the high pressure dissolver system, and 2) in maintenance labor and materials. Additional operating labor will not be required. Summarized incremental operating costs are as follows:

	Annual Costs
Electric Power - 600 HP Peak - 200 HP Average	$ 3 700
Maintenance Labor and Materials	10 000
Credit for Recovered HNO_3 Based on 90 percent Recovery	-60 000
Net Operating Cost	$ -46 300

Thus, the value of recovered nitric acid will more than offset increased operating costs. The net credit will be about $46,000 per year.

VI. EXPENDITURE PATTERN

The following expenditure pattern is based on the assumption that a new Gaseous Effluent Project will be approved as part of the fiscal year 1970 budget, with scope design to be initiated in FY 1969.

Fiscal Year	Capital Cost	Operating Cost
FY 1969	$ 50 000	-
FY 1970	300 000	-
FY 1971	190 000	$ -20 000
FY 1972	-	$ -43 000
Total	$ 540 000	

DECLASSIFIED

[redacted]

[redacted] [redacted]D

APPENDIX C

DECLASSIFIED

VII. HAZARDS EVALUATION

Under adverse atmospheric conditions, $NO-NO_2$ emission from 200 Area stacks occasionally exceeds the 5 ppm guide at ground level near the stacks. Nitrogen oxides no not present a hazard to offsite personnel. When the plant modifications outlined in this Appendix have been completed, NO and NO_2 emission will no longer present a potential problem to onsite personnel.

Iodine-131, plutonium-239 and mixed fission product emissions have been held within guides and do not present problems to either onsite or offsite personnel.

Krypton-85 emission is calculated to exceed guides offsite on occasion under adverse atmospheric conditions. This is not considered a serious problem since the frequency of exposure to offsite individuals would be very low.

If portions of the Hanford reservation are to be released for public use in the future, additional study would be required to evaluate the potential hazard and define needed control facilities.

VIII. RESEARCH AND DEVELOPMENT

As mentioned previously, additional sampling is required to define final design criteria for $NO-NO_2$ control facilities for the UO_3 Plant and AR vault stacks. Additional sampling of krypton-85 concentration offsite is required under adverse atmospheric conditions. Process fundamentals for $NO-NO_2$ control facilities are well understood and research and development are not required in these areas.

IX. ACKNOWLEDGEMENT

Many individuals within Atlantic Richfield and Battelle Northwest contributed to this study. The author wishes to give special acknowledgement to D. J. Brown for development of basic stack emission criteria and to R. A. Yoder for the conceptual design of the sugar denitration absorption system.

DECLASSIFIED [redacted]

X. REFERENCES

1. Process Design Engineering, "Systems or Devices for Gaseous Effluent Treatment - Chemical Processing Division - Isochem Inc." ISO-187, April 1, 1966.

2. D. J. Brown, "Determining Acceptable Stack Concentrations for Gaseous Wastes Released to the Atmosphere," ARH-243, November 7, 1967.

3. J. M. Gerhart and L. R. Michels, "Process Study - Gas Purification Facilities at Purex," HW-58400, December 31, 1958.

4. L. R. Michels, "Study Proposal - Fuel Processing - Gas Purification," ISO-850, May 5, 1967.

[redacted]

APPENDIX C

TABLE I

NO_2 CONCENTRATIONS IN THE ATMOSPHERE AT GROUND LEVEL DOWNWIND FROM PRINCIPLE RELEASE POINTS IN 200 AREAS

Percent of Time NO_2 Concentrations are Below Listed Values	Distance from Release Point								
	1 Mile			3 Miles			10 Miles		
	291-A* Stack	AR-PV ** Stack	UO_3 *** Stack	291-A Stack	AR-PV Stack	UO_3 Stack	291-A Stack	AR-PV Stack	UO_3 Stack
99	180 ppm	12 ppm	20 ppm	30 ppm	3 ppm	5 ppm	4 ppm	<1 ppm	<1 ppm
95	100	10	15	17	1	2	1	<1	<1
90	60	6	9	12	1	1	1	<1	<1

* 200-foot Purex Plant stack, release rate 960 pounds per hour.
** 150-foot 244-AR Tank Vault stack, release rate 70 pounds per hour.
*** 80-foot 244-U Plant stack, release rate 111 pounds per hour.

DECLASSIFIED

[redacted]

DECLASSIFIED

DECLASSIFIED

APPENDIX C

TABLE II

IODINE-131 AND KRYPTON-85 CONCENTRATIONS IN THE ATMOSPHERE AT GROUND LEVEL DOWNWIND FROM THE 291-A STACK

Percent of Time Concentrations are Below Listed Values	Distance from Release Point					
	1 Mile		3 Miles		10 Miles	
	Iodine-131*	Krypton-85*	Iodine-131	Krypton-85	Iodine-131	Krypton-85
99	7×10^{-10}	8×10^{-6}	7×10^{-11}	8×10^{-7}	6×10^{-12}	7×10^{-8}
95	3×10^{-10}	3×10^{-6}	3×10^{-11}	4×10^{-7}	2×10^{-12}	2×10^{-8}
90	1×10^{-10}	2×10^{-6}	2×10^{-11}	2×10^{-7}	2×10^{-12}	2×10^{-8}
50	2×10^{-11}	2×10^{-7}	8×10^{-12}	1×10^{-7}	8×10^{-13}	1×10^{-8}

*Iodine-131 and krypton-85 values are given in microcuries per milliliter.

DECLASSIFIED

APPENDIX C

TABLE III

STACK SYSTEM MODIFICATIONS

Stack System	Function	Proposed Modifications
291-A	Purex Canyon Exhaust	Provide Third Dissolver Offgas I_2 Monitor System
E-2	Purex West Sample Gallery Hood Exhaust	Provide Radiation Recorder and Alarm; Provide Second Filter
E-3	Purex East Sample Gallery Hood Exhaust	Provide Radiation Recorder and Alarm; Provide Second Filter
E-1	Purex N and Q Cell Exhaust	Provide Radiation Monitor, Recorder and Alarm
E-5	Purex Analytical Laboratory	Provide Radiation Monitor, Recorder and Alarm
E-6	Purex East Sample Gallery and U Cell	This stack to be deleted by combining system with E-2
E-7	Purex West Sample Gallery and R Cell	Provide Radiation Monitor, Recorder and Alarm
White Room	Purex White Room Exhaust	Provide Absolute Filter
Tunnel No. 1	Purex Equipment Disposal Tunnel No. 1	Provide Monitor and Alarm
Tunnel No. 2	Purex Equipment Disposal Tunnel No. 2	Provide Monitor and Alarm
241-A	Purex Tank Farm Condensate Vent	Provide Continuous Strip Paper Beta-Gamma Monitor on Tank Farm Expansion Project; Provide Alarm*
244-AR P.V.	244-AR Vault Process Tank	Provide Alarm*
244-AR Vault	244-AR Vault Ventilation	Provide Alarm*
241-SX	Redox 241-SX Tank Farm Vent	Provide New Monitor, Recorder and Alarm
296-Z1	234-5-Z, 232-Z, 236-Z and 242-Z Building and Process Ventilation	Provide Continuous Alpha Monitor, Recorder and Alarm
296-Z2	231-Z Building and Process Ventilation	Provide Monitor, Recorder and and Alarm*

* Items to be provided under a future "Gaseous Effluents" project. All other items to be provided under FY 1968 and 1969 operating budget.

APPENDIX C

TABLE IV

200 AREA STACK SYSTEMS

STACK SYSTEM	LOCATION AND FUNCTION
Purex 291-A	200-foot stack located south of the 291-A Building. Discharges filtered ventilation air, treated and filtered vessel and condenser off-gas and treated dissolver off-gas from the 202-A Building.
Purex E-2	Located on the outside wall of the 202-A Building. Discharges filtered hood exhaust from the west sample gallery.
Purex E-3	Located on the outside wall near the northwest corner of the 202-A Building. Discharges filtered hood exhaust from the east sample gallery.
Purex E-1	Located on the outside wall at the northeast corner of the 202-A Building. Discharges filtered air from N and Q Cells.
Purex E-5	Located on the roof of the 202-A Laboratory Annex. Discharges filtered air from the Purex analytical lab hoods and glove boxes.
Purex E-6	Located on the northeast side of the 202-A Building. Discharges unfiltered air from the east sample gallery and U-Cell.
Purex E-7	Located on the southwest corner of the 202-A Building. Discharges unfiltered air from the west sample gallery and R-Cell.
Purex White Room	Located at the northwest corner of the 202-A Building. Discharges unfiltered air from the west end of the P & O Gallery.
Purex Tunnel #1	Located at the south end of Equipment Disposal Tunnel #1. Discharges filtered air from the tunnel.
Purex Tunnel #2	Located at the south end of Tunnel #2. Discharges filtered air from the tunnel.
Purex 241-A	Located on the roof of the 241-A 431 Condenser Building of the 241-A Tank Farm. Discharges noncondensible vapors from both the 241-A and 241-AX Tank Farms.

TABLE IV (Continued)

STACK SYSTEMS	LOCATION AND FUNCTION
244-AR Process Vent	Located northwest of 244-AR Vault. Discharges filtered off-gas from the process vent system of the AR Vault.
244-AR Vault	Located northeast of the 244-AR Vault. Discharges filtered ventilation air from the AR Vault.
Purex 293-A	Located on roof of 293-A Building. Discharges filtered air from the 293-A Building.
Purex UNH Vent	Located on roof of the 203-A Building. Discharges vessel vent off-gas from the UNH Tanks.
B-Plant - 291-B	200-foot stack located south of the 221-B Building. Discharges filtered ventilation air and "acid" process vent off-gas.
241-BY - I.T.S. #1	Located in 241-BY Tank Farm. Discharges filtered process off-gas from the #1 In-Tank Solidification Unit.
241-BY - I.T.S. #2	Located in the 241-BY Tank Farm. Discharges filtered process off-gas from the #2 In-Tank Solidification Unit.
Semiworks 291-C	200-foot stack located east of the 271-C Building. Discharges filtered process vent and filtered ventilation air from the 201-C Building.
201-C Patio	Located on the roof of the annex connecting the 281-C Building and 201-C Building. Discharges filtered air from the A and C Sample Galleries in the 201-C Building.
201-C Sink	Located at the southwest corner of the 201-C Building. Discharges unfiltered exhaust from the 201-C Building decontamination sink.
244-CR Vault	Located on the south side of the 241-C Tank Farm. Discharges filtered ventilation air from the 244-CR Vault and vent system.
209-E C.M. Lab	Located on south wing of the 209-E Building. Discharges ventilation and process air from the critical mass laboratory.

TABLE IV (Continued)

STACK SYSTEMS	LOCATION AND FUNCTION
Redox 291-S	200-foot stack located east of the 202-S Building. Discharges filtered ventilation air, filtered vessel vent off-gas and filtered dissolver off-gas from the Redox Building.
Redox North Gallery	Located at the northeast corner of the 202-S Building. Discharges filtered air from the north sampler gallery and sampler hoods.
Redox South Gallery	Located at the southeast corner of the 202-S Building. Discharges filtered air from the south sample gallery and sampler hoods.
Redox Decontamination Room	Located at the east end of the 202-S Building. Discharges filtered air from the Decon. Room and Regulated Shop and unfiltered air from the Regulated Tool Room, Low Level Decon. Sink and the SWP Lobby.
Redox P.R. Cage	Located on the roof of the Redox Silo. Discharges filtered air from the Product Removal Cage.
Redox Silo Sample Gallery	Located at the west end of the 202-S Building. Discharges unfiltered air from the Silo Gallery, organic feed tank and sample elevator.
Redox 233-S	Located at the north end of the 233-S Building. Discharges filtered ventilation air from the 233-S Loadout facility.
Redox 293-S	Located on the south side of the 293-S Acid Recovery facility. Discharges filtered ventilation air.
Redox 205-S	Located on the roof of the 205-S Sampler Room. Discharges filtered room air.
Redox 204-S	Four vents located on the roof of the 204-S Building. Discharges unfiltered tank vent off-gas.
Redox 203-S	Located between the 151 and 152 Tanks. Discharges roughly filtered vent off-gas from UNH Tanks.
Redox 276-S	Two vents located on top of the 276-S Facility. Discharges unfiltered vapors and ventilation air from the Organic Waste Treatment Facility.

TABLE IV (Continued)

STACK SYSTEMS	LOCATION AND FUNCTION
Redox 222-S Laboratory	Located on the roof of the 222-S Analytical Laboratory. Discharges filtered air from all hoods, glove boxes, hot cells and filtered ventilation air.
Redox 241-SX	Located on the wall of the 401-SX-402 Building. Discharges unfiltered condenser vent off-gas from 241-SX Waste Tanks.
291-T	200-foot stack located south of the 221-T Plant. Discharges both filtered and unfiltered air from the 221-T Canyon.
242-TX Cold Cell	Located on the wall of the 242-TX Waste Evaporator Facility. Discharges filtered air from the Waste Catch Tank Cell.
242-TX Hot Cell	Located on the wall of the 242-TX.Facility. Discharges filtered air from the hot cells of the 242-TX Facility.
242-TX Tank Farm	Located at the north end of the 241-TX Tank Farm. Discharges filtered vent off-gas from the TX Waste Tanks.
291-U	200-foot stack located south of the 221-U Building. Discharges filtered air from the 221-U Canyon and the hot side of the 244-WR Vault.
224-UA X-31	Located on the roof of the 224-UA Building. Discharges filtered ventilation air from the depleted UO_3 Calciner Facility.
224-UA X-13	Located on the roof of the 224-U Building. Discharges filtered ventilation air from the enriched UO_3 Calciner Facility.
224-U X-14	Located on the roof of the 224-U Building. Discharges unfiltered off-gas from the UO_3 Plant acid absorber and UNH Concentrator.
244-WR	Located in the WR exclusion area. Discharges ventilation air from the cold side of the WR Vault.
222-U	Located near the south east corner of the 222-U Building. Discharges air from a hood and hot cell in the 222-U Facility.

TABLE IV (Continued)

STACK SYSTEM	LOCATION AND FUNCTION
291-Z	200-foot stack located south of the 234-5 Building. Discharges filtered process and ventilation air from the 234-5, 236-Z and 242-Z Buildings.
231-Z	Located on the roof of the 231-Z Building. Discharges filtered air from the hoods and glove boxes in the 231-Z Building.

UNCLASSIFIED

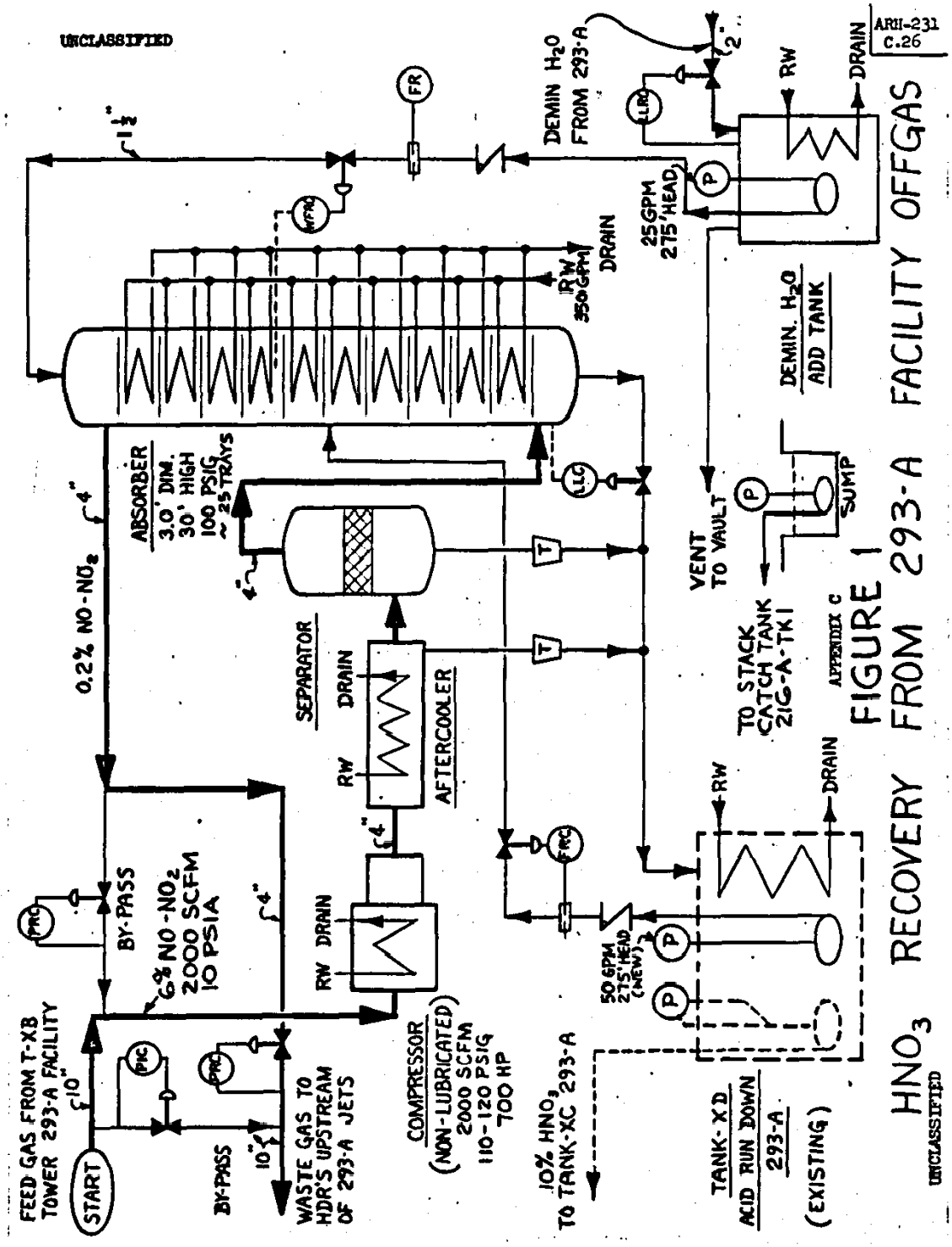

UNCLASSIFIED

UNCLASSIFIED

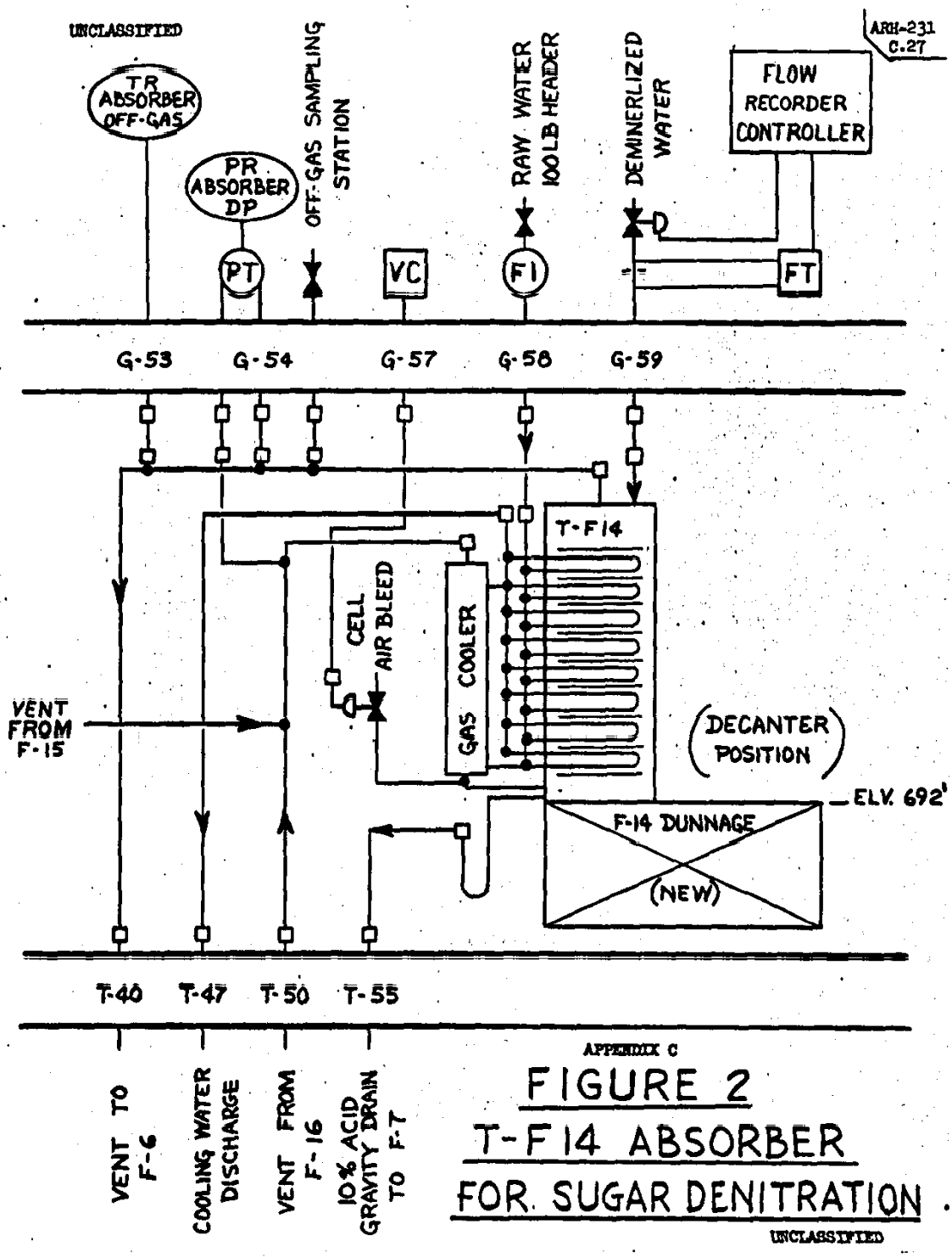

APPENDIX C

FIGURE 2

T-F14 ABSORBER

FOR SUGAR DENITRATION

UNCLASSIFIED

UNCLASSIFIED

APPENDIX D

DISPOSAL OF RADIOACTIVE SOLIDS

H. D. Haberman and D. D. Wodrich
Facilities Engineering Department

TABLE OF CONTENTS

		Page
I.	INTRODUCTION	D.1
II.	SUMMARY AND CONCLUSIONS	D.1
III.	REVIEW OF SOLID WASTE DISPOSAL PRACTICES	D.2
	A. Present Burial Methods	D.2
	B. Amount of Waste Buried	D.3
IV.	TYPES OF WASTE GENERATED	D.4
V.	STATUS OF BURIAL GARDENS BY 1980	D.4
VI.	ALTERNATIVES TO PRESENT WASTE DISPOSAL METHODS	D.4
	A. Introduction	D.4
	B. Incineration	D.5
	C. Decontamination	D.7
	D. Waste Burial	D.12
	E. Transportation	D.14
VII.	BURIAL GARDEN IDENTIFICATION	D.14
VIII.	HAZARDS	D.15
IX.	RESEARCH AND DEVELOPMENT	D.15
X.	REFERENCES	D.16

TABLES

I.	ESTIMATED STATUS OF SOLID WASTE BURIAL GARDENS IN THE 200 AREAS	D.17
II.	ANNUAL WASTE GENERATION	D.18
III.	COMPARISON OF ANNUAL WASTE VOLUMES BEFORE AND AFTER VOLUME REDUCTION	D.19

Page

FIGURES

I. WASTE INCINERATION FACILITY, DRAWING NO. SK-2-21830 D.20

II. PLUTONIUM DECONTAMINATION FACILITY, DRAWING NO. SK-2-21832 D.21

III. PLUTONIUM DECONTAMINATION FACILITY LEACH AND SPRAY CELLS, EQUIPMENT AND FLOW SCHEMATIC D.22

IV. EQUIPMENT ARRANGEMENT DECONTAMINATION FACILITY, DRAWING NO. SK-2-21831 D.23

V. WASTE TANK PUMP DECONTAMINATION, DRAWING NO. SK-2-21840 D.24

VI. CONCRETE TRENCH STORAGE, DRAWING NO. SK-2-21826 D.25

VII. FAILED EQUIPMENT STORAGE TUNNEL, DRAWING NO. SK-2-21839 D.26

APPENDIX D

DISPOSAL OF RADIOACTIVE SOLIDS

I. INTRODUCTION

Since the beginning of the Hanford Project, solid radioactive wastes, resulting from the operations of the many Hanford facilities, have been disposed of by burial in various burial grounds on the project. As a result of these operations, relatively large amounts of radionuclides have been placed in the ground and significant areas of land have been relegated to restricted use. These present disposal practices are now being examined and alternative methods explored as part of the low level waste management reevaluation program.

The purpose of this study is to discuss and develop cost data for other dry waste disposal concepts aimed at achieving one or more of the following objectives:

1) To reduce the volume of waste buried and thereby reduce the land usage rate.

2) To reduce the radionuclide content of the buried wastes.

3) To improve the retrievability of the wastes and the associated radionuclides.

4) To provide additional knowledge on the location, composition and radionuclide content of the stored wastes.

5) To improve protection of the general public from possible future involvement with buried solid waste.

Recently, the Atomic Energy Commission has decided to use the burial gardens in the 200 Area plateau for centralized disposal of most of the solid radioactive wastes generated by the various Hanford contractors, plus minor amounts from offsite contractors. The Atlantic Richfield Hanford Company has the responsibility for operating the 200 Area burial gardens. This study considers the effect of this additional volume of solid waste on the Chemical Processing Division burial activities, but limits itself to currently generated solid wastes and does not include burial of wastes excavated from existing 100 Area and 300 Area burial gardens. The discussions of existing burial gardens and other disposal concepts are limited to the 200 Areas only.

II. SUMMARY AND CONCLUSIONS

To date, approximately 130 acres of land, containing 4.5 million cubic feet of solid radioactive waste, 50,000 curies of fission products, and 346 kilograms of plutonium, have been consumed in 200 Area burial gardens. The wastes are buried in earthen trenches. With the planned use of the 200 Areas as a burial site for most of the wastes from other Hanford

facilities, annual land consumption will increase from an average rate of about 6-1/2 acres per year to 12 acres per year. If currently planned practices are continued until 1980, about 300 acres will be in burial gardens containing 9 million cubic feet of radioactive waste.

Alternate waste disposal concepts such as incineration of low level combustion wastes and decontamination of failed equipment can reduce the waste volume and amount of radionuclides to be buried. Also by burying the waste in concrete trenches and keeping better records, retrievability of the waste would be greatly improved. Incineration of the low level combustible waste (approximately 220,000 cubic feet per year) would reduce the total annual solid radioactive waste volume 60 percent, or from 360,000 cubic feet to 145,000 cubic feet. This would save approximately 7 acres of land per year. Decontamination of failed equipment would remove an estimated 20,000 curies of fission products and 500 to 2000 grams of plutonium per year from the dry wastes. Most of this removed plutonium would be recovered while the fission products would be stored in the high level liquid waste storage tanks.

The capital cost of providing these facilities is estimated at $2,700,000 with an annual operating cost of $775,000. These costs are itemized as follows:

Facilities	Capital Cost	Annual Operating Cost (In addition to Present Costs)
Incinerator	$ 950 000	$ 425 000
Decontamination Facilities	1 400 000	350 000
Burial Hoist Facility	80 000	No Increase
Concrete Burial Trench	-	200 000 *
Burial Garden Survey	325 000 **	No Increase
Total (rounded)	$2 700 000	$ 975 000

* This amount will be required each year for burial trenches.

** This amount may be one-time expense cost rather than a capital cost.

III. REVIEW OF SOLID WASTE DISPOSAL PRACTICES

A. Present Burial Methods

Solid radioactive wastes from the chemical processing plants normally contain either plutonium or fission products as a contaminant. Wastes containing low levels of contamination are generally packaged in 4.5 cubic-foot cardboard cartons and dumped in 25-foot deep earthen trenches. When the trench is about full, it is covered with at least

four feet of dirt. Large pieces of failed equipment are placed in wooden, metal or concrete boxes, dependent on shielding requirements, and then buried in earthen trenches.

The 15 burial gardens in the 200 Areas are divided into three categories, namely, dry waste burial gardens, industrial burial gardens, and construction burial gardens. The dry waste burial gardens receive primarily low level solid waste packaged primarily in cardboard cartons. All types of miscellaneous wastes have been deposited at these sites ranging from contaminated dirt and potentially contaminated paper to gloveboxes containing multigram quantities of plutonium. The solid wastes received from offsite are also buried in these gardens.

The industrial burial gardens receive waste usually packaged in large wooden or concrete boxes, containing gross quantities of fission products. For the most part, these sites have been restricted to the burial of large pieces of failed or obsolete equipment from the chemical separations plants.

The two construction burial gardens, both in the 200 East Area, are limited to burial of low activity wastes resulting from construction work on existing facilities.

Since 1960, several large pieces of fialed equipment from the Purex Plant have been placed on flat cars and stored in a 400-foot-long tunnel that is connected to the building below grade level. Eight carloads of equipment are currently in storage.

Small waste vaults near the 222-T, 222-B, and 222-S Analytical Laboratories have also been used for disposal of small quantities of high level solid laboratory wastes. These wastes contain mixed fission products and traces of plutonium.

B. Amount of Waste Buried

The solid wastes buried in the 200 Areas contained approximately 360,000 curies of radioactive fission products at the time of original burial. After decay, approximately 50,000 curies presently remain. The precise quantity is not known since records do not contain the exact amount of type of contamination. The first formal burial records were not started until October, 1959, and related solely to the measured discards of stainless steel failed equipment. Subsequently, in 1960, information was recorded pertaining to the source, the general type and the volume of the waste. Radiation measurements were generally taken primarily for personnel protection but were not always recorded. The estimates of waste volume and radionuclides content is, to a large degree, based on present burial practices.

It is estimated that there are approximately 346 kilograms of plutonium, 578,000 kilograms of uranium, and 310,000 kilograms of other contaminated wastes such as missile parts, metal turnings,

tools, gauges, etc., buried in the 200 Areas. Table I lists the quantities and types of waste that have been buried in the 200 Area burial gardens since startup of the plant.

At the present time, approximately 130 acres of land have been used for burial purposes. Much of the dirt is also contaminated as many of the waste packages broke open when the trenches were backfilled. The waste materials were packaged to provide confinement until burial and were not intended to provide containment after they were buried.

IV. TYPES OF WASTE GENERATED

The solid radioactive wastes are both combustible and noncombustible, consisting of such materials as paper, rags, plastic, glass, wood, rubber and failed equipment. The radionuclides contained in the wastes are primarily mixed fission products, activation products, plutonium and uranium. Table II lists the quantities and types of solid wastes that are generated in the Hanford facilities plus some additional waste received from offsite. The quantities of wastes shown are based on average quantities of wastes buried in the past with some adjustments made for anticipated future facilities.

The chemical processing facilities operated by the Atlantic Richfield Hanford Company generate about one-half of the total solid wastes being buried at Hanford. In addition, one or two carloads of failed equipment are stored in the Purex tunnel each year. Battelle Northwest Laboratory and Douglas United Nuclear are the other major contributors of solid waste. All other sources contribute less than 3 percent of the total volume.

V. STATUS OF BURIAL GARDENS BY 1980

If present burial practices are continued and the volume of waste to be buried is as shown in Table II, 12 acres of land will be consumed each year. By 1980, this will increase the present 130 acres in burial gardens to almost 300 acres and the volume of solid waste in the ground from the present 4.5 million cubic feet to 8.6 million cubic feet. The radionuclide content of these wastes will be an estimated 200,000 curies in 1980 as compared to an estimated 50,000 curies today (370,000 curies originally decayed to 50,000 today). In addition, 20 to 30 carloads of failed equipment will be stored in the Purex tunnels.

VI. ALTERNATIVES TO PRESENT WASTE DISPOSAL METHODS

A. Introduction

Other solid waste disposal concepts are described aimed at reducing the waste volume (and thereby reducing the land usage), reducing the radionuclide content, improving retrievability, and providing additional knowledge of the location and content of the buried wastes. These concepts include incineration of the low level combustible waste, decontamination of most of the failed equipment,

burial of all solid wastes in concrete trenches and improved burial ground identification.

B. Incineration

1. Description

Incineration provides the greatest ratio of volume reduction of the methods now commonly in use at nuclear facilities. Over 60 percent of the solid radioactive wastes generated at Hanford are low level combustibles suitable for incineration. Assuming a volume reduction rate of 20:1, the 220,000 cubic feet of combustible waste can be reduced to 11,000 cubic feet. These low level combustible wastes are estimated to contain less than 200 curies of radionuclides plus 5,000 grams of plutonium.

Compaction rather than incineration could also be used to reduce the waste volume. It could be applied to both combustible and noncombustible waste but the volume reduction ratio is only 4:1 or less. Table III compares Hanford waste volumes before and after incineration and compaction, and the wastes applicable to each method. Intermediate level wastes are excluded because of the equipment maintenance problems associated with high radiation. As can be seen from Table III, incineration provides greater volume reduction than compaction for Hanford wastes.

Wastes containing multi-gram quantities of plutonium have been incinerated at Hanford for several years as a means of recovering the plutonium. A small continuous type incinerator, designed for nuclear safety, is located at Z Plant. It is planned to continue using this incinerator for recovery of plutonium from combustible wastes. Because of mechanical and material failures which have occurred, replacement of part of this incinerator facility is planned. However, costs for such replacement are not included in this study.

An incinerator facility can be provided to incinerate all low level combustible wastes. It is assumed that the wastes to be incinerated would be limited to radiation intensities no greater than 100 mr per hour at the container surface and no more than one gram of plutonium per cubic foot. The waste would be separated and charged into the incinerator on a campaign basis to achieve segregation of the long-lived fission products, plutonium, and short-lived isotopes as much as possible. Packaging of combustible wastes for incineration would be the responsibility of the originating facility. The cardboard boxes would be labeled with type and amount of contamination and radiation intensity. The incinerator ash would be packaged in 55-gallon drums for burial.

2. Facilities

The incinerator would have a design capacity of 500 pounds per hour and be housed in a building approximately 40 feet by 50 feet as shown in Figure I. The incinerator is envisioned to be batch loaded on a semi-continuous basis with the ash being removed by conveyor to cooling bins prior to loadout in drums. The incinerator offgas system would consist of several air cleaning devices and filters in series to keep release of radioactive materials within established limits. Continuous monitoring as well as control instrumentation would be required. The incinerator facility would include waste storage space and service areas. Equipment would also be provided for burning radioactive solvents.

The facility could be located anywhere within the 200 Areas, but locating it near the T Plant exhaust stack would reduce the cost as certain existing facilities could be used. An incineration facility as required has been proposed as a fiscal year 1969 budget item. This facility as described by Borgeson and Lee (Reference 1) includes a small waste compaction unit which may not be needed.

3. Costs and Timing

a. Capital Costs

The estimated capital cost for the incinerator facility is $950,000. The cost is broken down as follows:

1) Incinerator Facility

Installation	$600 000
Engineering 25%	150 000
	750 000
Contingency and Escalation (28%)	210 000
Total (Rounded)	$950 000

b. Operating Costs

Estimated operating cost for the incineration facility is $425,000 per year.

c. Timing

If funds are available in FY 1969 for the incinerator, incineration of trash could begin in 1971. The design and construction schedule is as follows:

	Months after Authorization	
	Start	Completion
Design	1	12
Construction	3	24

C. Decontamination

It is proposed that failed or obsolete metallic equipment contaminated with multi-curie quantities of radionuclides be decontaminated before disposal. Decontamination efforts would be to remove as much of the contamination as practicable, not to the point where it can be released as clean, but so that shielding would not be required to handle the equipment during disposal or later during retrieval if this is deemed desirable.

Equipment to be decontaminated prior to disposal is in three categories: 1) plutonium contaminated equipment which can be decontaminated in an unshielded containment facility, 2) fission product contaminated equipment of such a size that it can be transported to the 221-T Decontamination Facility, and 3) fission product contaminated equipment too large to be transported to the 221-T Building. These three categories are discussed as follows:

1. Plutonium Contaminated Equipment

a. Discussion

About 17,000 cubic feet of noncombustible plutonium contaminated waste are generated each year, primarily in the Z Plant facilities in the Atlantic Richfield Hanford Company. Currently, a small portion of these wastes, such as rubber gloves, small filters, and valves, which contain relatively large amount of plutonium (more than 2 grams per cubic foot) are leached to remove the plutonium. Other failed or obsolete equipment such as process tanks, pumps and glove boxes are cleaned in place and then removed and buried. While these methods have been reasonably successful in removing most of the plutonium, it is a tedious task requiring large amounts of labor. The removal of plutonium from the large pieces of equipment, such as glove boxes and tanks, is only partially successful as facilities do not exist for dismantling the equipment for cleaning. Plutonium deposition monitoring instrumentation has shown that even after the equipment has been cleaned in place, multi-gram quantities of plutonium may still remain. It is estimated that from 500 to 2000 additional grams of plutonium could be recovered annually from the noncombustible wastes (primarily failed and obsolete equipment) in a plutonium decontamination facility.

A plutonium decontamination facility can be provided to better decontaminate failed and obsolete equipment prior to burial. Techniques and equipment have not as yet been developed for dismantling and decontaminating large pieces of plutonium contaminated equipment, such as glove boxes, but the technology for designing and developing such a facility is available at Hanford.

The concept for decontaminating large pieces of plutonium contaminated equipment is to dismantle it and then employ dry and wet cleaning techniques. Dismantling would be accomplished in a large cell by people in plastic suits. Power tool and hand techniques, such as scraping, brushing and abrasion, or wet techniques such as leaching, scrubbing, or spray washing, would be used to remove the plutonium. When decontamination is completed, the equipment would be sprayed with a plastic resin to "fix" the remaining contamination and then packaged in drums or boxes for burial.

b. Facilities

The plutonium decontamination facility would be a new structure with a process area as shown in Figure II. The process area would consist of a dismantling cell, a wet chemistry leaching hood, and a decontamination spray cell - all plutonium contaminated - surrounded by a noncontaminated operating area. Much of the equipment for the dismantling cell, which would require development, would include such things as metal saws, shears, and grinders. The decontamination spray cell would have spray nozzles and a recirculation system for the decontamination solutions.

The leaching hood would be equipped for leaching the smaller pieces of cut up equipment. The plutonium-rich leaching solutions would be transferred to the 236-Z Plutonium Reclamation Facility. Chemical makeup tanks and feed tanks would be required for the wet chemistry process. A flow sketch of this wet chemistry process is shown in Figure III. This facility could be located anywhere within the 200 Areas. However, locating it south of the 234-5 Building, near the 236-Z Plutonium Reclamation Facility, would reduce the cost as certain existing facilities could be used. The ventilation system could be exhausted through the 291-Z exhaust fans and stack, and the plutonium-rich streams can be routed directly to the 236-Z facility.

2. Decontamination at 221-T Building

a. Discussion

Approximately 44,000 cubic feet of intermediate level noncombustible wastes contaminated with an estimated 25,000 curies of fission products are generated each year at Hanford. About 80 percent of it comes from the 200 Areas

chemical processing plants. These wastes are primarily pieces of failed or obsolete equipment, such as pumps, agitators, pipe jumpers, and process vessels. It is estimated that 90 percent of this failed equipment can be decontaminated at the 221-T Decontamination Facility. The ability to remove most of the radionuclides from almost any piece of equipment which can be transported to the T Plant canyon has been demonstrated during the past 10 years of its operation. High pressure water, steam, detergents and chemical baths have been used to decontaminate equipment having initial radiation readings of several hundred rads per hour down to levels which permit contact maintenance. It is expected that, as an average, at least 90 percent of the radionuclides can be removed from failed equipment. The T Plant Decontamination Facility can serve as a central decontamination facility for the Hanford Plant. Failed equipment contaminated with beta-gamma-emitting isotopes could be transported to T Plant for decontamination prior to burial. Following decontamination, the equipment would be spray-coated with a plastic resin coating to "fix" any loose contamination and then buried. Burial boxes for shielding or containment would not be required.

Shielded transfer boxes (casks) would be required for transporting the equipment from the operating plants to T Plant. One transfer box is currently being used for transporting equipment between plants in the 200 Areas. This box is approximately 12 feet wide by 20 feet long by 17 feet high, shielded with four inches of concrete. It is anticipated that at least one new transfer cask car would be required. This new cask car would be smaller than the existing transfer box but would have more shielding. Some preliminary decontamination might have to be done at the shipping sites to reduce the radiation to levels acceptable for transport. Additional special boxes or casks would be required periodically to transport pieces of equipment too large or too radioactive to be handled in the two transfer boxes described above. The cost of these special boxes is not included in this study.

b. Facilities

The 221-T Decontamination Facility consists of the converted canyon portion of an unused separations plant. The work area is 40 feet wide by 800 feet long serviced by a 75-ton remotely-operated crane. Facilities have been installed in some of the old process cells and on the canyon deck for equipment decontamination. These facilities consist of various tanks for immersion of the contaminated equipment in heated detergents or chemical baths, high pressure water spray systems and sand-blasting equipment. Facilities also exist for repair and maintenance of decontaminated equipment.

To provide capability for decontaminating the large volume of failed equipment to be decontaminated prior to burial, additional facilities would be required. These new facilities, as well as the existing facilities, are shown in Figure IV and would include a remote decontamination cell, an in-line tank decontamination system, and two soaking cells.

In addition to the facilities installed in the 221-T canyon, one shielded shipping cask and railcar would be provided for transporting highly radioactive equipment to the decontamination facility. This cask would not be designed to meet ICC regulations as it would be used only on the Hanford Plant. It would be a general purpose cask designed to provide 4 to 6 inches of lead shielding and as large a volume as can be obtained within the weight limitations imposed by a standard rail car. The cask would be stainless-steel-clad and weigh approximately 50 tons.

3. Equipment Too Large for Decontamination at 221-T Building

a. Discussion

Certain pieces of highly contaminated equipment are too large to transport to the 221-T Decontamination Facility. These include waste tank pumps with a length of 40 to 50 feet and Purex process waste concentrators which cannot be removed from the building when enclosed in a containment box.

The long waste tank pumps can be decontaminated and sprayed with plastic resin as they are removed from the waste tanks. This decontamination equipment is shown in Figure V.

Large pieces of failed equipment, such as the process waste concentrators, are stored in two tunnels attached to the 202-A Building. The equipment is placed on old flatcars which are then pushed into the tunnel. A cross-section of the tunnel is shown in Figure VI. It is planned to continue using the tunnels as interim storage until either enough failed equipment is accumulated to justify a decontamination facility at Purex or until the radionuclides (much of it short-half-life zirconium-niobium) have decayed enough to allow transporting the equipment to the T Plant Decontamination Facility.

b. Facilities

New improved facilities are required for decontaminating the long waste tank pumps. A portable decontamination capsule, chemical makeup tanks and pumps would be required for each of the 200 Areas. The decontamination capsule would be a long stainless steel cylinder equipped with spray rings and nozzles. The capsule would be placed on the pump pit and as

the crane lifts the pump from the tank, it would pass through the capsule where the spray rings would apply decontamination solutions and a plastic resin coating. Portable chemical makeup tanks and pumps would supply the capsule. When not in use, the capsule would be stored in a box to control contamination spread.

No new facilities are needed at this time for the interim storage tunnels at the Purex Plant. Tunnel capacity is now estimated to be adequate until about 1980, so a decision to build a new decontamination facility at Purex for decontaminating the stored equipment will probably not have to be made before the mid-1970's.

4. Costs and Timing

a. Capital Costs

Estimated capital cost for the decontamination facilities is $1,400,000. These costs are broken down as follows:

1) Plutonium Decontamination Facility

Installation	$300 000	
Engineering 25%	75 000	
	$375 000	
Contingency and Escalation (28%)	105 000	
Total		$ 480 000

2) Fission Product Decontamination Facilities

Installation 221-T Building Equipment	$375 000	
Tank Farm Equipment	75 000	
Shipping Cask Car	100 000	
	550 000	
Engineering 25%	138 000	
	688 000	
Contingency and Escalation (28%)	192 000	
		880 000
Total (Rounded)		$1 400 000

b. Operating Costs

The new decontamination facilities will require additional operating funds. These are estimated as follows:

Plutonium Decontamination Facility	$125,000 per year
Fission Product Decontamination Facilities	$225,000 per year

c. Timing

If funds for the decontamination facilities are authorized in early FY 1970, they could be in operation in FY 1972. The design and construction schedule is as follows:

	Months after Authorization	
	Start	Completion
Design	1	14
Construction	3	30

D. Waste Burial

1. Discussion

Current burial methods result in large quantities of dirt becoming contaminated when the waste is buried in the earthen trenches. This additional volume of contaminated material becomes particularly undesirable when future retrieval of waste is considered. One burial concept which improves the retrievability of buried waste and provides better containment is to place all of the solid wastes in concrete trenches. Such trenches would provide safe waste storage for many years and would greatly reduce the cost of any future retrieval.

The solid wastes to be buried in the concrete trenches will be packaged in various containers. Incinerator ash would be in 55-gallon drums and intermediate level wastes in metal containers, while large pieces of failed equipment would be placed directly into the trench. Records will be kept pertaining to the type, quantity and location of the waste and radionuclides buried.

2. Facilities

As conceived, the concrete trenches would be approximately 20 feet wide by 30 feet deep and several hundred feet long. Divider walls would be provided at intervals dependent on the type of waste being buried. Removal cover blocks would seal the trenches. An enclosed, portable gantry crane would be used for routine burial of low level wastes. This structure would provide contamination control and would simplify the day-to-day

burial operations. The concrete trench and portable crane are shown in Figure VII. Large pieces of failed equipment would be placed in the trenches by motor crane.

Other concepts which may be considered for waste burial are underground tunnels, underground caissons, unused underground liquid waste storage tanks and above ground metal buildings. It appears that the unused liquid waste storage tanks would provide satisfactory storage for small containers of intermediate level wastes and that above ground metal buildings might be satisfactory for very low level wastes.

3. Costs and Timing

a. Capital Costs

Estimated capital cost for the burial facilities is $280,000. This would provide the enclosed gantry crane for unloading the waste and enough concrete trench for one year's burial requirements. The costs are as follows:

1) Enclosed Gantry Crane

Installation	$ 50 000
Engineering 25%	12 500
	$ 62 500
Contingency and Escalation (20%)	17 500
Total	$ 80 000

2) Concrete Trench

Installation	$125 000
Engineering	31 000
	156 000
Contingency and Escalation (28%)	44 000
Total	$200 000

b. Operating Costs

No additional operating costs are anticipated for the waste burial operations.

c. Timing

If funds are made available for the proposed burial concept

in FY 1970, the new burial trenches can be available for use in FY 1971. The design and construction schedule is as follows:

	Months after Authorization	
	Start	Completion
Design	1	8
Construction	4	12

E. Transportation

The cost of packaging and transporting the wastes from the 100 and 300 Areas to the 200 Area waste disposal facilities is not included in this study. It is assumed that this would be the responsibility of the sender.

VII. BURIAL GARDEN IDENTIFICATION

Past practices of mapping, marking and recording burial garden trenches in the 200 Areas are inadequate when future retrieval of the waste is contemplated. The first burials were made only 20 years ago and difficulty has already been experienced in determining the exact location of failed equipment. This difficulty can be attributed to the grid system used in the 200 Areas. No single universal grid system has been established for the entire Hanford Project area. Because the present system does not take into account the curvature of the earth, discrepancies in the true locations of structures could arise depending on the monuments from which the survey is made.

A Lambert or Washington State coordinate system should be established for the 200 Area burial gardens. The area would be resurveyed to determine old burial gardens coordinates as accurately as is practical. Current burial garden records and maps would show the locations of waste and type and quantity of contamination.

The estimated cost of resurveying the entire Hanford complex is approximately $650,000 of which $450,000 is for ground survey work and $200,000 is for an aerial survey. The U. S. Corps of Engineers would provide aerial photographs of the area with a Lambert Grid System superimposed on each photograph. From these photographs, it would be possible to scale off distances to within approximately three feet.

The portion of the cost for the 200 Areas is about 50 percent of the total cost of $325,000. Of this amount, $80,000 would be required to update the burial garden records.

The work could be completed approximately 24 months after funds are made available.

Consideration has been given to providing permanent barriers to the old terminated burial gardens in lieu of the removal of equipment in the

event that the land were to be abandoned or returned to public usage. Such barriers would prevent persons from inadvertently uncovering the contaminated waste. Such a barrier is envisioned as concrete or asphalt paving of the entire burial gardens. While this method is considered a possible alternate to removal, it does not appear to be practical as long as recovery of the waste is being considered. Two inches of asphalt paving is estimated to cost $4,250 per acre and two inches of lean concrete is estimated at $8,600 per acre.

VIII. HAZARDS

The hazards associated with the solid waste disposal facilities discussed in this study are no greater than those associated with the present disposal methods. The types of activities required in operating most of these facilities are currently practiced at Hanford. While large volume incineration is not being done here at present, incinerators are in common use throughout the world with several being used for radioactive waste disposal. In general, the waste disposal concepts discussed would reduce the overall long-term hazards by providing better containment and control of dry wastes.

IX. RESEARCH AND DEVELOPMENT

Some development effort is required for the solid waste disposal facilities discussed in this study. This effort, estimated to cost $150,000 over a two-year period would include the following:

1) Improved instrumentation for quantitatively measuring the amounts of nuclear materials and fission products in waste packages and failed equipment;

2) Design studies and test programs to evaluate incinerator materials and design concepts; and

3) Development of tools and techniques for decontaminating plutonium contaminated equipment.

Other research and development programs aimed at reducing solid waste disposal costs by developing new processes may be desirable. Some programs which may be worthy of consideration are:

1) Design studies which will establish criteria for making disposal considerations a part of the initial equipment design;

2) Other decontamination processes such as removal of metal by electrolysis; and

3) Volume reduction of failed equipment and other noncombustibles by using a large compactor or a smelter.

X. REFERENCES

1. M. E. Borgeson and H. A. Lee, "Solid Wastes Volume Reduction Facilities, FY 1969 Budget Facility Description," ISO-878, June 2, 1967.

UNCLASSIFIED

APPENDIX D

TABLE I

ESTIMATED STATUS OF SOLID WASTE BURIAL GARDENS IN THE 200 AREAS

Number	Square Feet Consumed	Cubic Feet Buried	Total Curies Initially	Total Curies At 6-30-67	Grams Plutonium	Kilograms Uranium	Kilograms Other Waste
200-East Area 58.86 Acres							
Dry Waste No. 1	111 000	107 000	100	1	900	400	
Dry Waste No. 12&12b	983 000	546 000	900	500	9 000	1 000	
Minor Construction No.4	156 000	56 000	10	1	10	1	
Construction (No Number)	75 000	80 000	10	1	20	2	
222 Vaults	2 000	6 000	600	1	1	1	
Industrial Waste No.2	298 000	319 000	25 000	300	800	300	
Industrial Waste No.5	102 000	112 000	7 500	120	620	120	
Industrial Waste No.5a	227 000	218 000	16 500	280	1 380	120	
Industrial Waste No.10	610 000	414 000	31 000	13 000	4 000	800	
Total	2 564 000	1 858 000	81 620	14 200	16 730	2 740	
200-West Area 67.91 Acres							
Dry Waste No.1	331 000	253 000	200	1	94 000	700	
Dry Waste No.2	306 000	291 000	500	2	126 000	1 400	
Dry Waste No.3	402 000	385 000	900	30	68 000	70 000*	60 000*
Dry Waste No.4	655 000	570 000	2 200	800	33 000	500 000*	250 000*
Dry Waste No.4b	30 000	25 000	100	90	1 000	500	250
222 Vaults	500	8 000	4 800	100	1	1	
Industrial Waste No.1	413 000	484 000	48 000	2 400	2 000	900	
Industrial Waste No.2	822 000	644 000	229 000	33 000	6 000	2 000	
Total	2 959 500	2 660 000	283 700	36 420	330 000	575 500	310 250

*Numbers obtained by extrapolating nuclear materials content experience from 1959 to present back to the beginning of the Project.

UNCLASSIFIED

UNCLASSIFIED

APPENDIX D

TABLE II

ANNUAL WASTE GENERATION

Type of Contamination	Radionuclide Content (Approximate) Curies	Gram Pu	Kg U-Th	Volume of Waste Generated by Facilities in Cubic Feet/Year ARHCO	BNW Labs.	DUN	ITT/FSS	Offsite	Total
Plutonium Nonrecoverable (Low Level <1g/ft^3)									
Combustible		5 000		35 000	1 000		2 600		38 600
Noncombustible		2 200		15 000	500			1 000	16 500
Fission Products (Low Level <100 mr/hr)									
Combustible	140	400	80	66 000	3 000				69 000
Noncombustible	25	100	20	10 000	1 500		400	1 000	12 900
U-Th (Low Level <100 mr/hr)									
Combustible					30 000	5 000			35 000
Noncombustible					30 000	1 000		3 000	34 000
Plutonium Recoverable (>1 g/ft^3)									
Combustible		17 000 *		1 100 *					1 100
Noncombustible		9 000		600					600
Fission Products (Intermediate Level)									
Combustible	10 000	100	20	5 000	6 000				11 000
Noncombustible	25 000	400	80	40 000	4 000				44 000
Activation Products									
Combustible	10					80 000			80 000
Noncombustible	100 000					14 000			14 000
Total Low Level Combustible				101 000	34 000	85 000	2 600		222 600
Total All Wastes				172 700	76 000	100 000	3 000	5 200	356 900
Percent Combustible				58.5	44.7	85.0	86.7	0	62.4

* This waste is incinerated in the existing Z Plant incinerator.

UNCLASSIFIED

UNCLASSIFIED

APPENDIX D

TABLE III

COMPARISON OF ANNUAL WASTE VOLUMES BEFORE AND AFTER VOLUME REDUCTION

(All Volumes in Cubic Feet)

Type of Waste	Total Volume Presently Buried	Incinerable Waste	Waste to be Buried After Incineration	Compactable Waste	Waste to be Buried After Compaction
Plutonium Bearing, Nonrecoverable					
Combustible	38 600	38 600	1 930	38 600	9 650
Noncombustible	16 500		16 500	4 125	13 400
Fission Products, Low Level					
Combustible	69 000	69 000	3 450	69 000	17 250
Noncombustible	12 900		12 900	3 225	10 500
Uranium-Thorium, Low Level					
Combustible	35 000	35 000	1 750	35 000	8 750
Noncombustible	34 000		34 000	8 500	27 600
Plutonium Bearing, Recoverable					
Combustible	1 100	1 100 *	55		1 100
Noncombustible	600		600		600
Fission Products, Intermediate Level					
Combustible	11 000		11 000		11 000
Noncombustible	44 000		44 000		44 000
Activation Products					
Combustible	80 000	80 000	4 000	80 000	20 000
Noncombustible	14 000		14 000		14 000
Miscellaneous	200		200		200
Total	356 900		144 385		178 050

* Critically safe incinerator.

UNCLASSIFIED

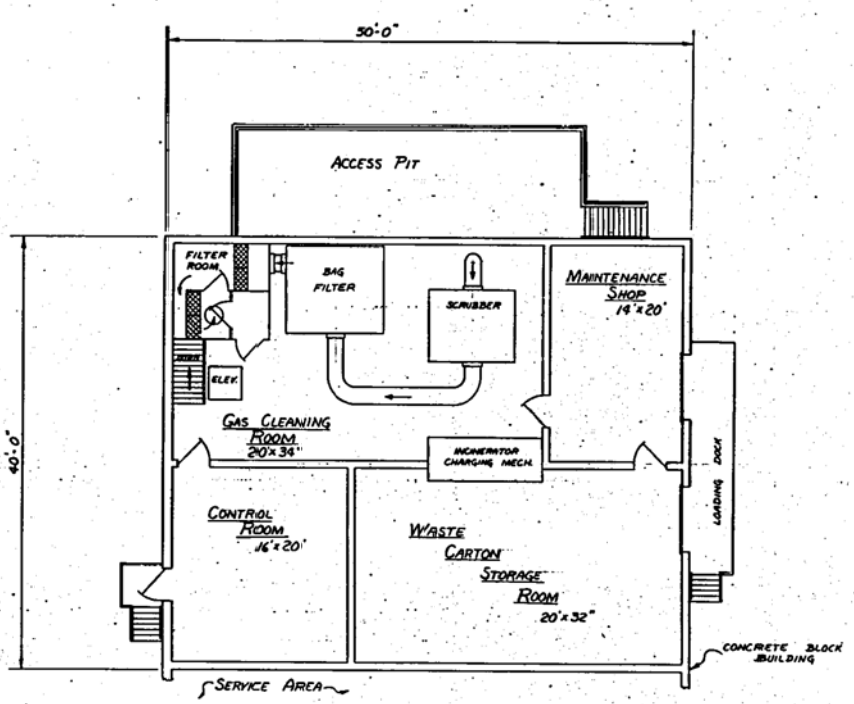

PLAN - FIRST FLOOR

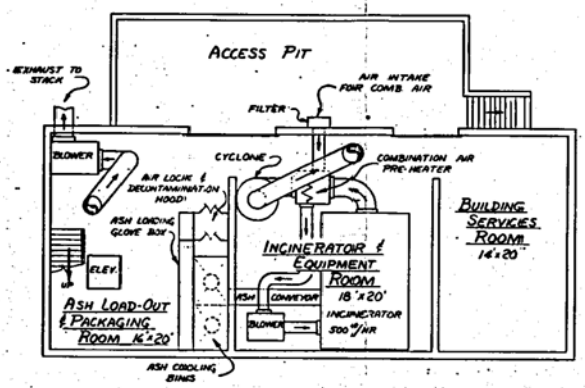

PLAN - BASEMENT

APPENDIX D

STUDY DRAWING

FIGURE: I

U. S. ATOMIC ENERGY COMMISSION
RICHLAND OPERATIONS OFFICE
ISOCHEM INC.
WASTE INCINERATION FACILITY
NONE
SK-2-21830

ARH 231
Page D21

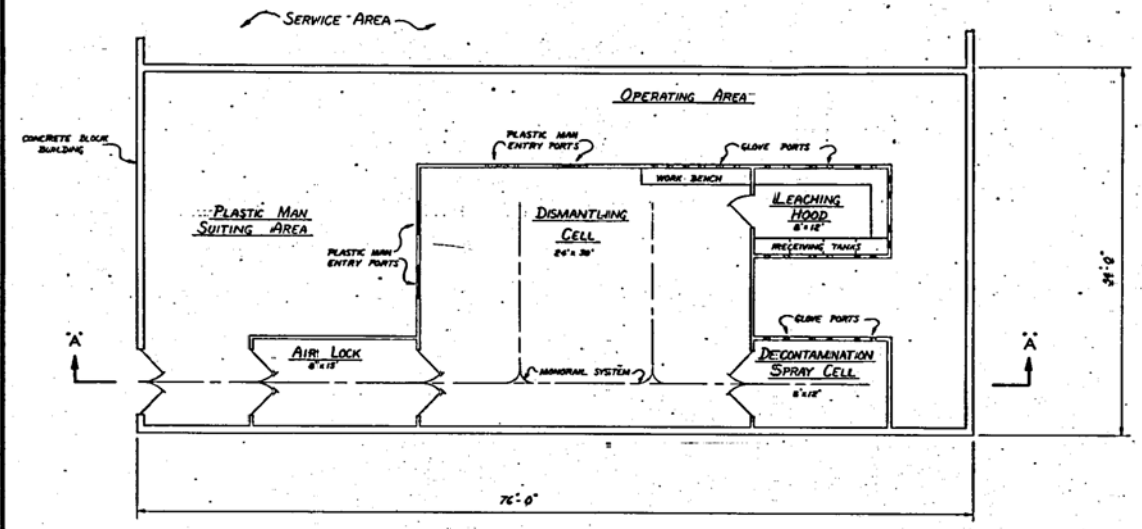

PLAN

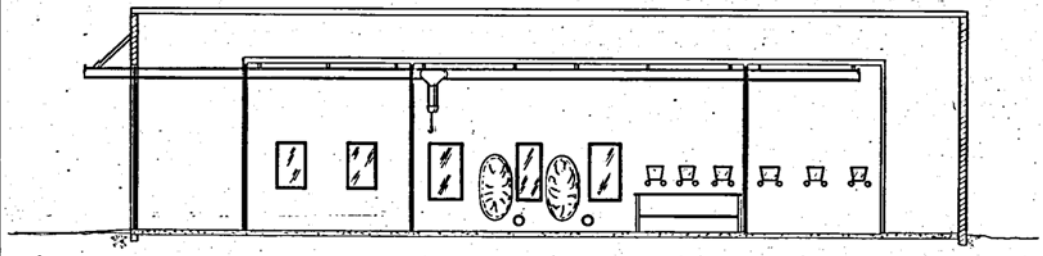

SECTION "A-A"

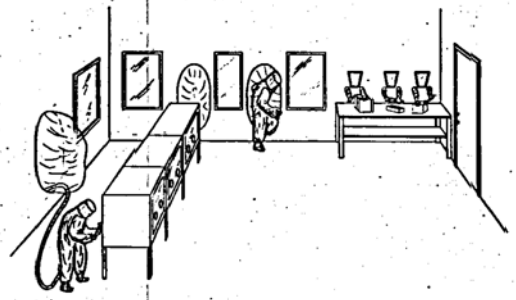

VIEW OF DISMANTLING CELL

APPENDIX D
STUDY DRAWING
FIGURE: II

U. S. ATOMIC ENERGY COMMISSION
RICHLAND OPERATIONS OFFICE
ISOCHEM INC.
PLUTONIUM DECONTAMINATION FACILITY
NONE
SK-2-21832

EQUIPMENT AND FLOW SCHEMATIC
LEACH AND SPRAY CELLS
PLUTONIUM DECONTAMINATION FACILITY

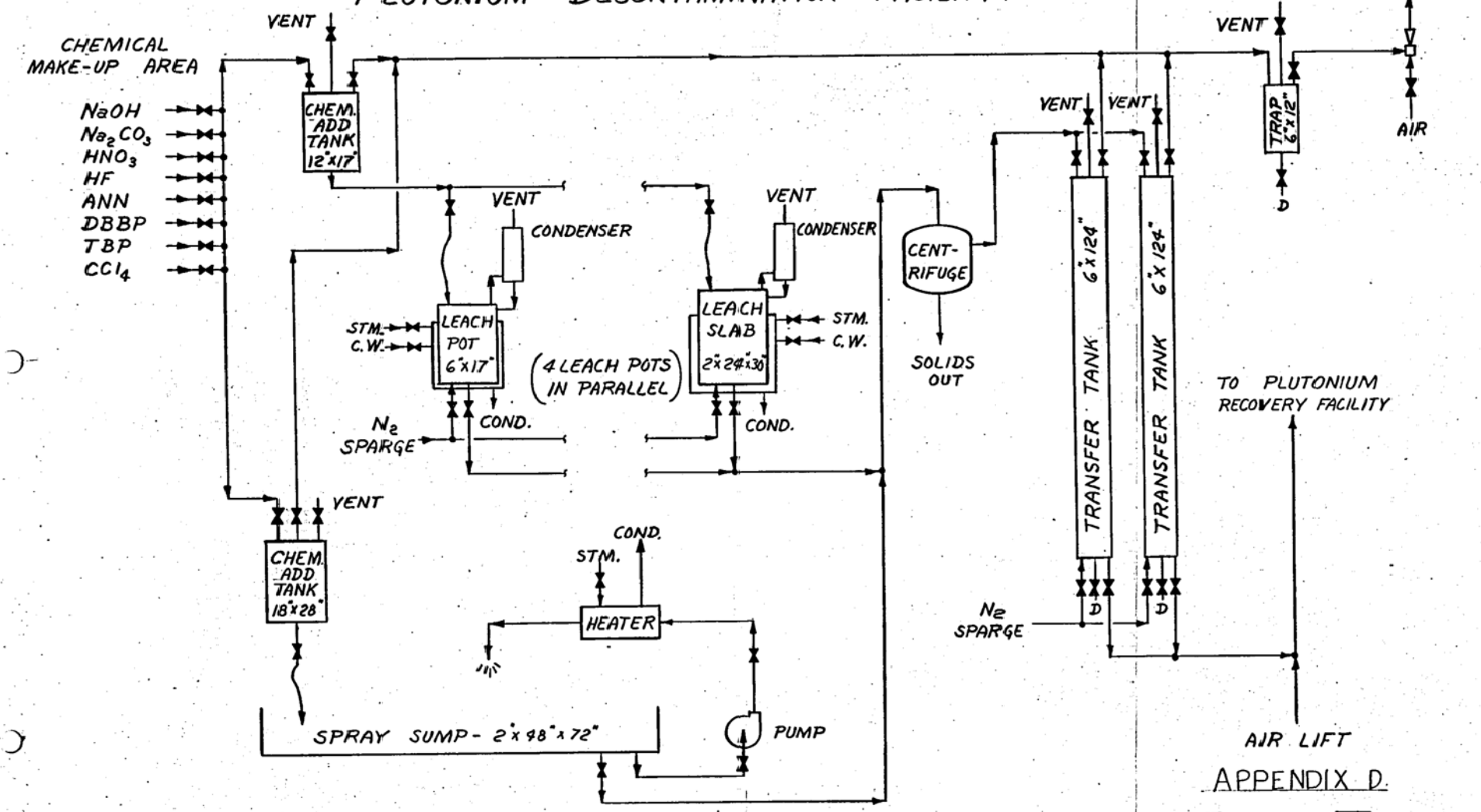

APPENDIX D.

FIGURE III

ARH-231
Page D.23

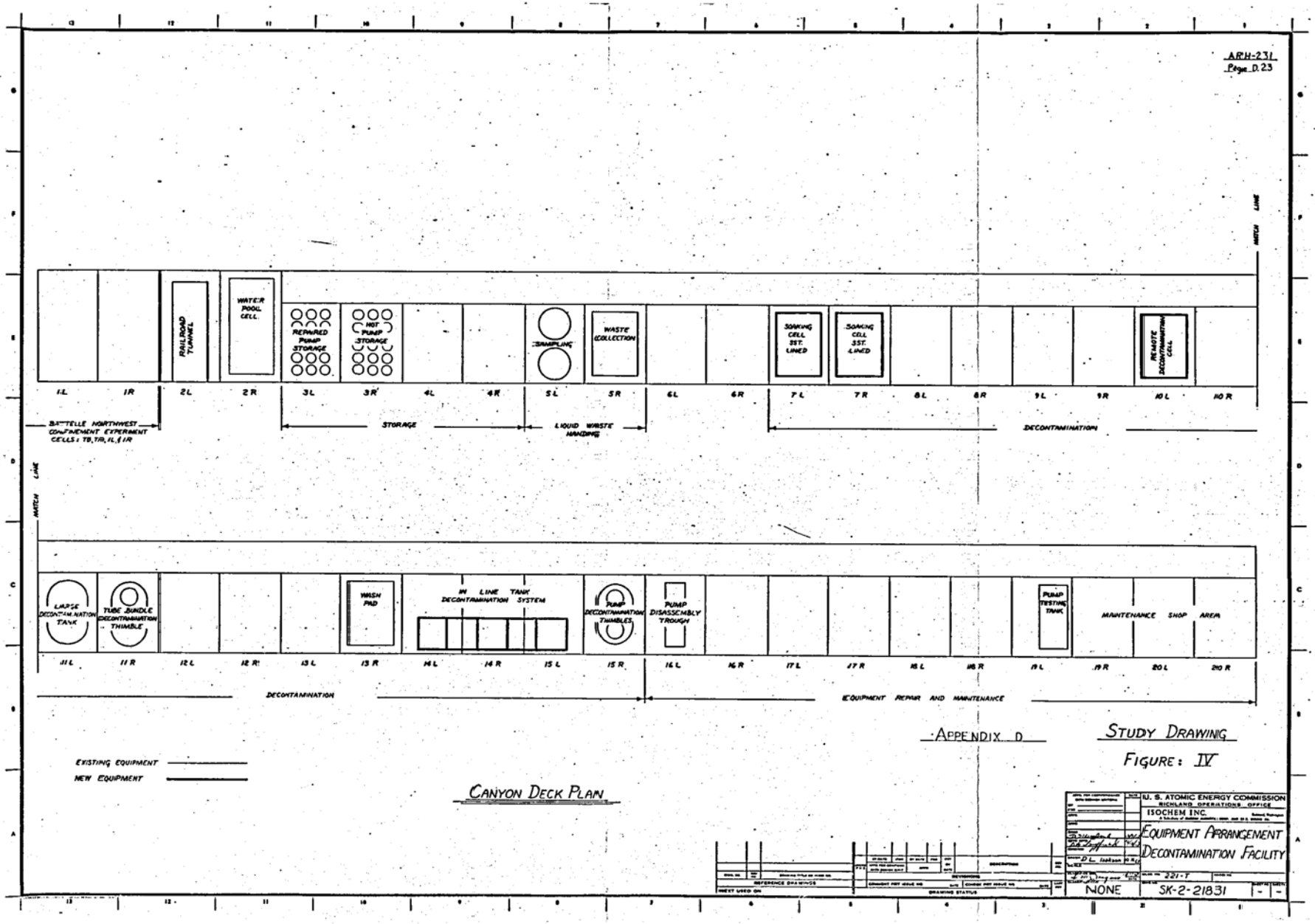

APPENDIX D

STUDY DRAWING

FIGURE: IV

CANYON DECK PLAN

U. S. ATOMIC ENERGY COMMISSION
RICHLAND OPERATIONS OFFICE
ISOCHEM INC.
EQUIPMENT ARRANGEMENT
DECONTAMINATION FACILITY
221-T
NONE
SK-2-21831

ARH 231
Page D.24

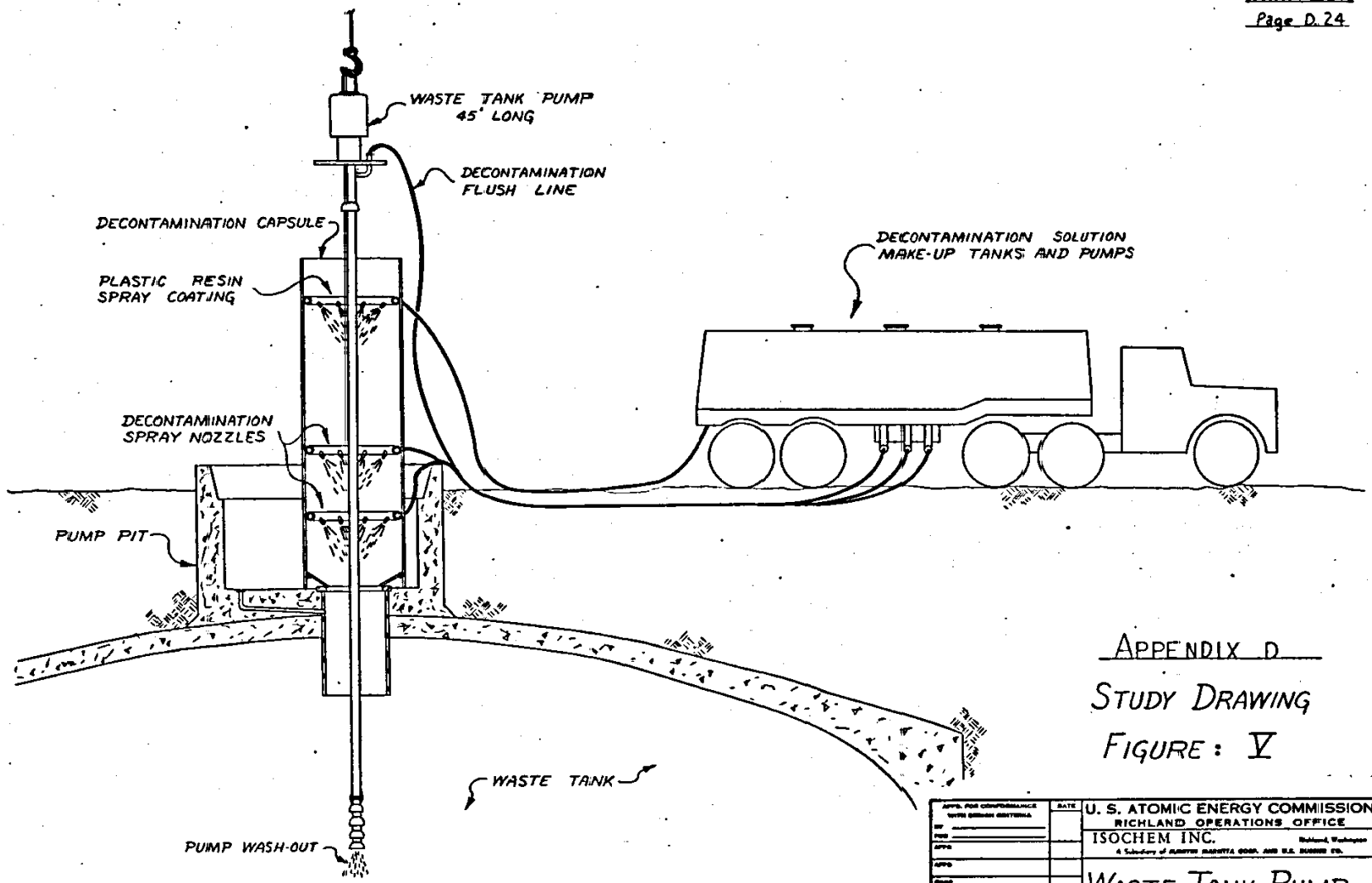

APPENDIX D
STUDY DRAWING
FIGURE: V

U. S. ATOMIC ENERGY COMMISSION
RICHLAND OPERATIONS OFFICE
ISOCHEM INC.
Richland, Washington
A Subsidiary of MARTIN MARIETTA CORP. AND U.S. RUBBER CO.

WASTE TANK PUMP
DECONTAMINATION

DRAWN D.L. Isakson
CLASSIFICATION NONE
DWG. NO. SK-2-21840
SHEET NO —
SHEETS —

REFERENCE DRAWINGS
NEXT USED ON
REVISIONS
DRAWING STATUS

ARH 231
Page D.25

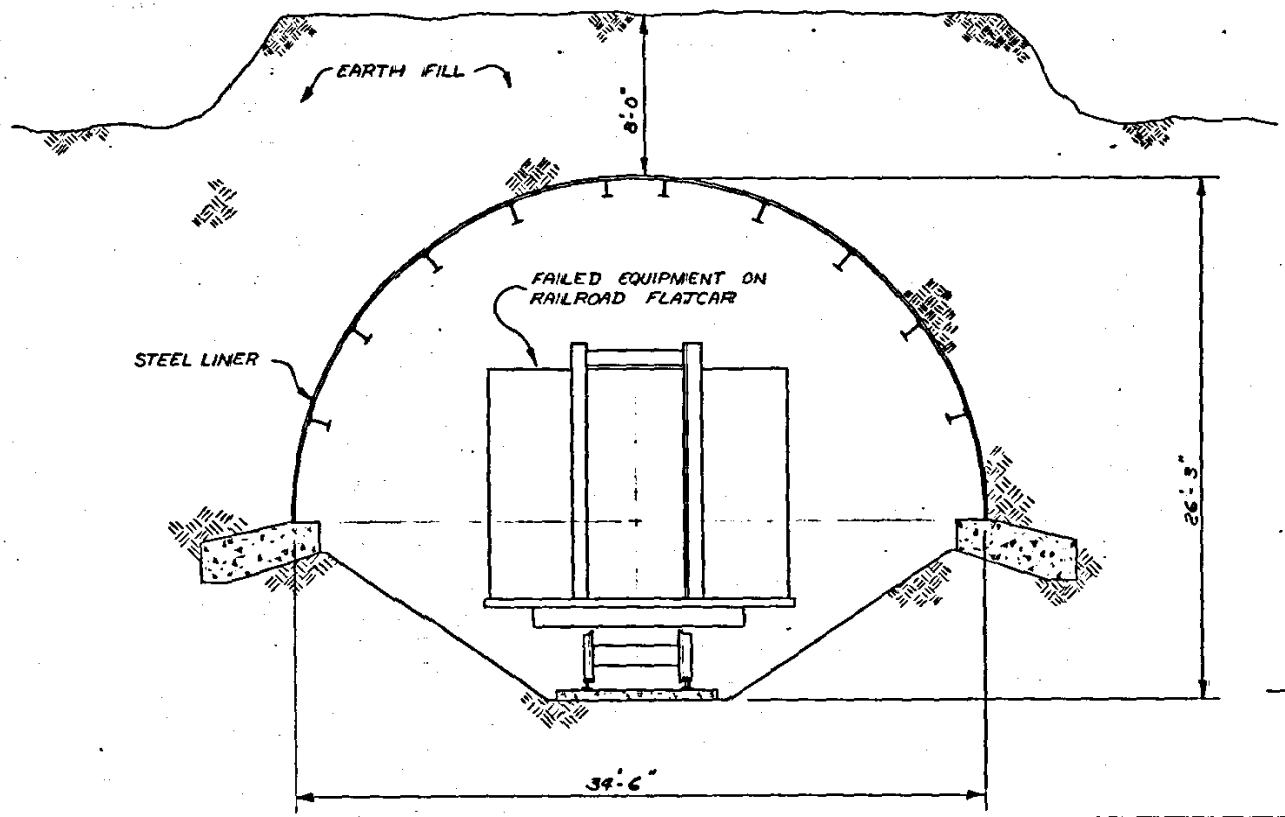

CROSS-SECTION OF TUNNEL

APPENDIX D
STUDY DRAWING
FIGURE: VI

U. S. ATOMIC ENERGY COMMISSION
RICHLAND OPERATIONS OFFICE
ISOCHEM INC.
A Subsidiary of Allentown Materials Corp. and U.S. Smelting Co.

FAILED EQUIPMENT STORAGE TUNNEL

DRAWN: D.L. Isakson
CLASSIFICATION: NONE
202-A
SK-2-21839

REFERENCE DRAWINGS
NEXT USED ON
REVISIONS
DRAWING STATUS D1 4641

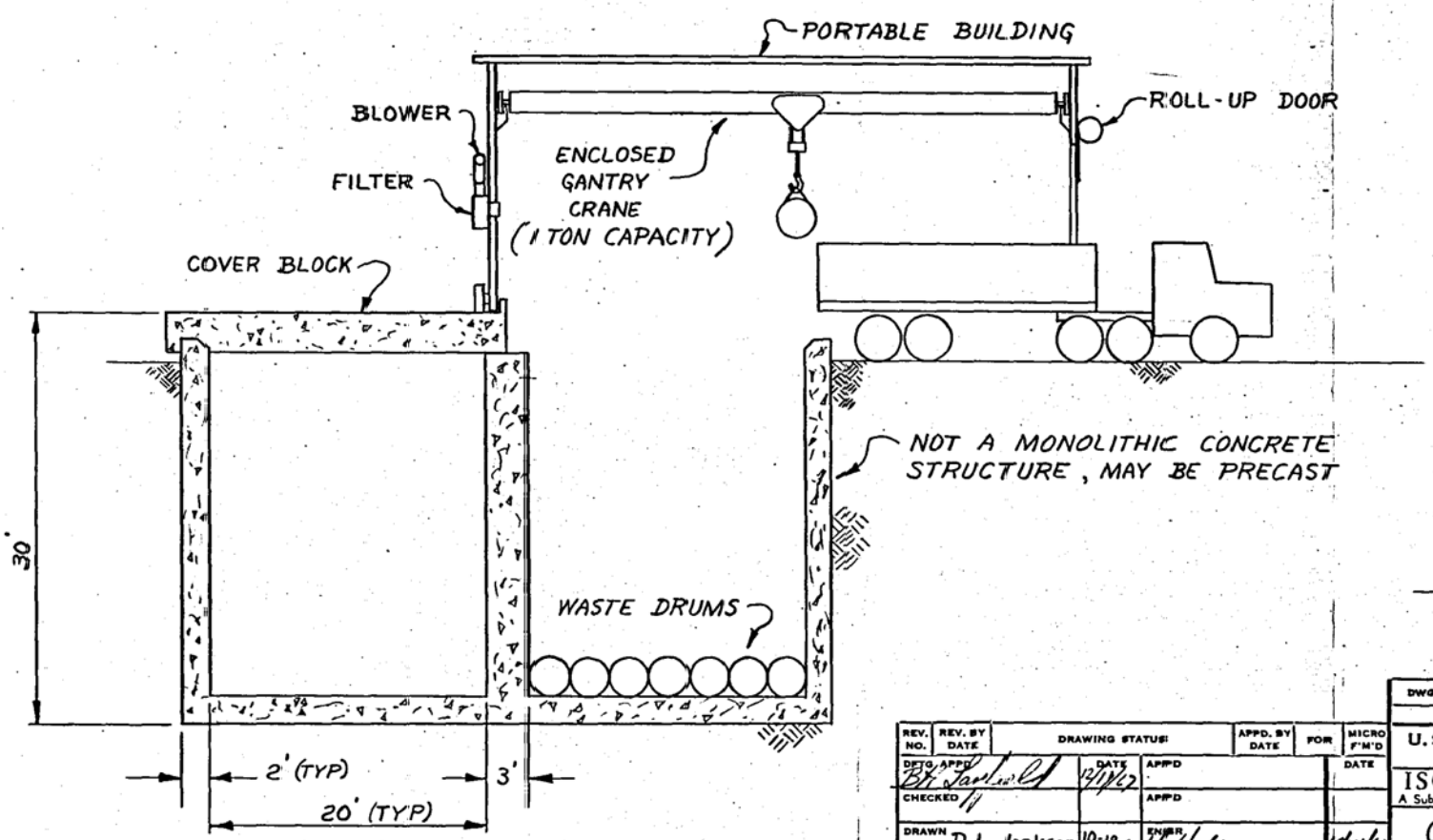

APPENDIX D
STUDY DRAWING
FIGURE: VII

REV. NO.	REV. BY DATE	DRAWING STATUS	APPD. BY DATE	FOR	MICRO F'M'D DATE
DFTG APPD	BK Jardine	DATE 12/1/67	APPD		
CHECKED			APPD		
DRAWN	D.L. Isakson	10-18-67	ENGR	N. Hakiman	10/24/67
BLDG NO.	NONE		INDEX NO.		
SCALE		CLASSIFIED BY	CLASSIFICATION	NONE	
		DATE 10/24/67			

DWG NO.	REV NO.	DRAWING TITLE OR INDEX NO.
REFERENCE DRAWINGS		

U.S. ATOMIC ENERGY COMMISSION
RICHLAND OPERATIONS OFFICE

ISOCHEM INC. Richland, Washington
A Subsidiary of MARTIN MARIETTA CORP. AND U.S. RUBBER CO.

CONCRETE TRENCH STORAGE

DWG NO.	SHEET NO.	SHEETS
SK-2-21826	—	—

CHARLES BRUNING CO. 84-8000-024 2-7-66

D1 4C41

APPENDIX E

SITE CLEANUP CONSIDERATIONS

M. J. Kirkman
Waste Management Process Engineering Section
Research and Engineering Department

TABLE OF CONTENTS

		Page
I.	INTRODUCTION	E.1
II.	DISCUSSION	E.1
	A. Past Activities Resulting in Soil Contamination	E.1
	B. Method of Site Cleanup	E.2
	C. Limitations of the Study	E.2
	D. Hazards	E.3
III.	COSTS TO CLEAN UP THE SITE	E.3
	A. Cleanup Costs Resulting from Plant Operation, 1944 - 1967	E.3
	B. Additional Cleanup Costs Resulting from Operation, 1967 - 1980	E.8
	C. Cleanup Costs Resulting from Plant Operation, 1944 - 1980	E.10
IV.	REFERENCES	E.11

APPENDIX E

SITE CLEANUP CONSIDERATIONS

I. INTRODUCTION

Reprocessing nuclear fuels at Hanford since 1944 has resulted in release of radionuclides to the soil of the 200 Areas plateau. Although these radionuclides are believed "safe" at present, future climatic or geological changes, or a desire to release the land for unrestricted public use, may, at some future date, justify the expense of removing the radionuclides for storage at some other site. Appendix E develops "order of magnitude" costs for removing the contaminated soil and solid wastes from the 200 Areas and transporting them about 1500 miles for storage in abandoned salt mines (say, central Kansas).

II. DISCUSSION

A. Past Activities Resulting in Soil Contamination

1. Swamps, Cribs, and Specific Retention Trenches

Discharge of low activity level waste to swamps, intermediate activity level waste to cribs, and organic and scavenged salt wastes to specific retention trenches have produced areas of soil which are contaminated in varying degrees with various types of radionuclides. Most of the radionuclides are sorbed in the soil and are held high in the soil columns (Reference 1). In the 200 Areas there are about 160 liquid waste disposal sites containing an estimated 250,000 pounds of uranium, 220 kilograms of plutonium, 48,000 curies of strontium-90, and 45,000 curies of cesium-137. A detailed listing of all liquid disposal sites and their estimated radionuclide contents is included in Appendix A.

2. Buried Solid Waste

Solid materials resulting from plant operations (for example, wiping tissues, rags, rubber gloves), contaminated with various radionuclides are sealed in cardboard boxes and buried in controlled burial gardens. Failed process equipment contaminated with radionuclides is stored in tunnels adjoining the Purex Plant or placed in wooden or concrete boxes and buried in controlled burial gardens. Fifteen controlled burial gardens covering about 130 acres of land in the 200 Areas contain an estimated 350,000 grams of plutonium, 1,140,000 pounds of uranium, and 50,000 curies of mixed fission products. A detailed listing of the solid waste disposal sites is included in Appendix D.

3. Buried Lines

Radioactive waste solutions are transferred from process buildings to waste storage facilities and discharge sites, and between the 200 East and West Areas through buried transfer lines. Some of the lines are enclosed in concrete or corrugated steel encasements that provide double containment between the waste solutions and the soil. There are approximately 100,000 feet of buried radioactive transfer lines in the 200 Areas, of which about 10,000 feet are encased (Reference 2). Residual radioactivity in such lines and leaks associated with a few of the lines would require that the lines and dirt associated with leak areas be dug up and removed before the site could be released.

4. Spills

Accidental radionuclide contamination infrequently occurs during normal plant operations (for example, diversion box jumper changes, tank farm pump changes, waste and product solution spills). Contaminated soil resulting from such incidents is usually removed and buried, or covered over with clean soil and/or gravel. Asphalt or tar is sometimes used to cover contaminated soil and keep it in place. Approximately one million cubic yards of soil are contaminated in the 200 Areas as a result of spills and radionuclide spreads (Reference 3, 4) and would require removal to permit unrestricted access to such present controlled access zones.

B. Method of Site Cleanup

The radionuclides would be removed from the 200 Areas plateau by digging up the contaminated soil and shipping it offsite for permanent storage in abandoned salt mines (for purposes of this study assumed to be central Kansas). Only the costs incurred for the soil removal and shipment were considered. No costs were developed for unloading or storing the soil at the salt mine.

The alternative of leaching the radionuclides from the contaminated soil was considered but rejected as a basis for the studies. Although strontium-90 and cesium-137 can be leached from the soil by using large quantities of nitric acid (Reference 5, 6), limited soil decontamination work has shown that the quantitative decontamination required to release the site for unrestricted public use cannot be simply achieved. Transuranic materials do not leach from soil as well as cesium and strontium. A recovery rate of 90 percent is all that is expected in a scheme to leach plutonium from contaminated sand (Reference 7) by using a combination of nitric and hydrofluoric acid as leaching agents.

C. Limitations of the Study

This study develops the costs of removal of contaminated soil and solid wastes associated with the cribs, specific retention trenches,

swamps, burial gardens, spill areas and the buried transfer lines. It also develops costs for disposal of large equipment stored in the Purex railroad tunnels. Removal of contaminated process buildings and auxiliary facilities is not included in the site cleanup study. They are assumed to be sealed and left in place.

Removal of present ground water contamination was also not considered in the study. It is made up largely of 1-year half-life ruthenium-106 and 12-year half-life tritium. If radioactive discharges to the environment were discontinued, ground water concentrations would eventually decay to concentrations of no concern.

Costs for removing contaminated soil resulting from "high level waste" leaks within existing "high" and "intermediate" level waste tank farms is not considered in this study. Such costs are developed in an earlier study (Reference 8).

D. Hazards

1. Digging Hazards

Hazards associated with removing the contaminated soil from the 200 Areas are of two types: 1) those associated with excavation work (for example, cave-ins), and 2) those associated with "radionuclide" mining (for example, potential contamination "spreads" and personnel radiation).

Cave-in hazards would be suitably controlled by keeping the slopes of the excavations equal to or less than one. Radionuclide "spreads" can be prevented by using portable, prefabricated steel buildings to cover the digging sites, and using minimal spraying of water to control dust. Radiation exposure hazards can be minimized by using remotely operated large mobile shovels similar to those used in iron and oil sand mining industry and by the use of suitable respiratory protection by operators.

2. Shipping Hazards

Hazards associated with shipping contaminated dirt include potential for personnel exposure, and contamination resulting from leaky transport containers, and from rail accidents. These hazards can be overcome by designing special railroad cars and shipping containers that meet the Interstate Commerce Commission (Reference 9) and Atomic Energy Commission (Reference 10) regulations for shipping radioactive materials.

III. COSTS TO CLEAN UP THE SITE

A. Cleanup Costs Resulting from Plant Operation, 1944 - 1967

1. Cribs and Specific Retention Trenches

The soil beneath the cribs acts as ion exchange media to remove

radionuclides and transuranics from waste solutions as the solutions percolate through the soil to ground water. The ion exchange properties of the soil and the radionuclide distribution in the soil columns beneath the cribs are dependent on factors such as waste solution composition and flow rates, nature and concentration of complexing materials discharged to the cribs, and geologic structure of the soil. Since these factors vary for each waste stream and crib, the radionuclide distribution varies from crib to crib. Radionuclide distribution data are available for some cribs (Reference 1, 11) but do not exist for the majority. The available data indicate that about 99 percent of the radionuclides are contained in the first 30 feet of soil beneath the crib and nuisance contamination is usually encountered about 80 feet below the cribs.

The horizontal spread of waste solution below a disposal site is a function of waste flow rate and the geology beneath that site. Lateral spreads differ from crib to crib since the geology underlying the 200 Areas differs between crib sites (Reference 12, 13, 14). An estimated spread of 50 feet (that is, a soil column 50 feet in diameter larger than the crib diameter) was assumed for all cribs in order to calculate volumes of soil removed. Five wells drilled around each disposal site are assumed required to map the actual horizontal and vertical radionuclide distribution.

Quantities of noncontaminated soil must also be moved so that the slopes on the sides of all the excavations are kept equal to or less than one to prevent cave-ins. A slope of one was used to calculate the volume of overburden that must be moved. Calculation based on the above estimates show that 11.5 million cubic yards of contaminated soil must be removed and shipped offsite, and 104 million cubic yards of overburden must be moved. The 11.5 million cubic yards of contaminated soil include an estimated 2 million cubic yards of highly contaminated soil (approximately 0.06 curies of beta and gamma activity per cubic foot) located near the crib surface, 9 million cubic yards of moderately contaminated soil (approximately 0.01 microcuries of beta and gamma activity per cubic foot), and 0.5 million cubic yards of soil contaminated with plutonium (Z Plant cribs) and uranium.

Table 1

Costs for Removing Radionuclides from Cribs and Specific Retention Trenches

(In Millions of 1967 Dollars)

Capital Costs *	41.4
Operating Costs	441.6
Shipping Costs	1 327.0
Total	1 810.0

* Capital equipment purchased for removing and transporting the soil from the cribs and specific retention trenches will also be used for removing soil from the swamps, spill areas, burial gardens, and the buried transfer lines. The capital costs presented in this table, therefore, include those for Tables 2, 3, 4, and 5.

2. Swamps

Essentially, all of the radionuclides discharged to the swamps are contained in the sediments on the bottoms of the swamps. The estimated volume of soil removed from the swamps has been determined by assuming that the top three feet of dirt would be removed, or a total of 31 million cubic yards. Thirty radiological wells placed strategically throughout the swamps will establish radionuclide spread below the swamps.

Table 2

Costs for Removing Radionuclides from the Swamps

(In Millions of 1967 Dollars)

Capital Costs	*
Operating Costs	140
Shipping Costs	534
Total	674

* See Table 1.

3. Spill Areas

Spills and other accidental radionuclide discharges usually contaminate only the ground surface. The estimated volume of dirt removed from spill areas, assuming the top three feet of soil would be removed, is one million cubic yards.

Although contamination spread incidents in the 200 Areas are fairly well documented (Reference 3, 4) estimates of the amount of radionuclide discharged and the areas of land contaminated are sparse. The million cubic yard figure must be considered a rough estimate based upon the well documented data and assuming 20 percent more land requiring removal would be found by extensive searching.

Table 3

Costs for Removing Radionuclides from Spill Areas

(In Millions of 1967 Dollars)

Capital Costs	*
Operating Costs	3
Shipping Costs	113
Total	116

* See Table 1, page E.5.

4. Burial Gardens

Contamination in burial gardens is contributed by the packages of waste themselves and contaminated soil resulting from package breakage or disintegration after burial. Soil in the burial gardens other than that in the trenches is usually not contaminated, but the removal of buried material would likely spread contamination. Estimated volume of soil removed from the burial gardens, assuming all dirt in the burial gardens would be removed to a depth of 20 feet, is 12 million cubic yards. Approximately 1.2 million cubic yards of overburden must also be removed to keep the slopes of the excavations equal to or less than one.

Costs for removing the large equipment that is buried and stored in the Purex railroad tunnels are also included in Table 4.

Table 4

Costs for Removing Radionuclides from Burial Gardens

(In Millions of 1967 Dollars)

Capital Costs	*
Operating Costs	78
Shipping Costs	1 352
Total	1 430

* See Table 1, page E.5.

5. Underground Transfer Lines

Transfer line failures and leaks are not well documented and amounts of contaminated soil resulting from leaks are not available. The assumption that nine cubic feet of soil will be removed with each foot of line was used to calculate the volume of soil removed, 43,000 cubic yards. The pipe would be removed, decontaminated, and shipped offsite using the equipment originally provided in Section A-4.

Table 5

Costs for Removing Underground Waste Transfer Lines

(In Millions of 1967 Dollars)

Capital Costs	*
Operating Costs	2
Shipping Costs	5
Total	7

* See Table 1, page E.5.

Table 6

Summary of Costs to Remove the Contaminated Soil Resulting from Plant Operation 1943 - 1967

(In Millions of 1967 Dollars)

Waste Disposal Facilities	
Cribs and Specific Trenches	1 810
Swamps	674
Spills	116
Burial Gardens	1 430
Hot Waste Lines	7
Total	4 037

B. Additional Cleanup Costs Resulting from Operation, 1967 - 1980

1. Basis I

Cleanup costs presented in Section III-A were calculated for removing the contamination generated during the previous period of Hanford operation. Additional costs will be required to clean up the site. The following assumptions were used to develop these additional costs:

a. Cribs are used at 30 percent of the present rate, no specific retention crib disposal is permitted.

b. Present burial practices are continued (see Appendix D for estimated volumes).

c. Spill experience is the same as in the past.

d. About 30 percent more buried lines are installed.

e. No new swamps are used.

Results of calculations based on these assumptions are presented below.

Table 7

Increased Capital and Operating Costs Continued for Site Cleanup Required Because of Plant Operation Through 1980

(In Millions of 1967 Dollars)

Waste Disposal Facilities	Additional Costs
Cribs	7
Swamps	0
Spills	58
Burial Gardens	1 870
Hot Waste Lines	3
Total	1 938

2. Basis II

If plant operations continue through 1980 and money is provided for facilities to reduce environmental pollution as outlined in Appendix A through D, the following additional costs will be needed for site cleanup. The following assumptions were used to develop these costs:

a. Cribs are used at 10 percent the present rate and no specific retention cribbing is permitted.

b. A waste incinerator is provided for disposal of combustible materials and the resulting ash is stored in concrete burial vaults.

c. Equipment is decontaminated prior to burial in concrete burial vaults.

d. Spill experience is the same as in the past.

e. About 30 percent more buried lines are installed.

f. No new swamps are used.

Results of calculations based on these assumptions and cost estimates developed for present site cleanup are presented below.

Table 8

Increased Capital and Operating Costs for Continued Site Cleanup Required Because of Plant Operation Through 1980 Assuming Environmental Pollution is Reduced

(In Millions of 1967 Dollars)

Waste Disposal Facilities	Additional Costs
Cribs	4
Swamps	0
Spills	58
Burial Gardens	945
Hot Waste Lines	3
Total	1 010

C. Cleanup Costs Resulting from Plant Operation, 1944 - 1980

Total costs for removing the radionuclide contamination in the soil of the 200 Areas as a result of reprocessing nuclear fuels from 1944 through 1980 are presented below.

Table 9

Summary of Costs to Remove Radionuclide Contamination Resulting from Plant Operation, 1944 - 1980

(In Millions of 1967 Dollars)

Basis I (Section III-B.1)	
Costs from Table 6	4 037
Costs from Table 7	1 938
	5 975
Basis II (Section III-B.2)	
Total from Table 6	4 037
Total from Table 8	1 010
	5 047

IV. REFERENCES

1. J. R. Raymond and V. L. McGahn, "Scintillation Probe Results, 200 Area Waste Disposal Site Monitoring Wells," HW-84577, December 17, 1965.

2. Murry Rutherford to M. J. Kirkman, Private Communication.

3. K. F. Baldridge, "Unconfined Underground Radioactive Waste and Contamination in the 200 Areas," HW-60807, July 15, 1959.

4. G. E. Backman, "Summary of Environmental Contamination Incidents at Hanford, 1958-1964," HW-84619, April 12, 1965.

5. J. R. McHenry, "Absorption and Retention of Cesium by Soils of the Hanford Project," HW-31011, March 2, 1954.

6. J. R. McHenry, "Absorption and Retention of Strontium by Soils of the Hanford Project," HW-34499, February, 1955.

7. M. E. Borgeson, "Budget Design Criteria, 216-Z-9, Cavern Soil Excavation and Leaching Facilities," ISO-866, May 12, 1967.

8. P. W. Smith and R. E. Tomlinson, "Hanford High Level Waste Management Reevaluation Study," ISO-981, August 31, 1967.

9. Interstate Commerce Commission Regulations, 49 CRF 71-78.

10. AEC Manual Chapter 0529, "Safety Standards for the Packaging of Radioactive and Fissile Materials."

11. W. A. Haney, "The Effects of Ben Franklin Dam at Hanford," BNWL-412, May, 1967.

12. D. J. Brown, "Subsurface Geology of the Hanford Separation Areas," HW-61780, October 1, 1959.

13. D. J. Brown, "Geology Underlying the 200 Area Tank Farms," HW-67729, December 22, 1961.

14. D. J. Brown, "Geology Underlying the 241-AX Tank Farm," HW-79805, December 20, 1963.

APPENDIX F

EVALUATION OF THE EFFECTS OF INCREASED WATER TABLE ELEVATIONS ON 200 AREAS WASTE DISPOSAL

D. B. Cearlock and W. A. Haney
Hydrogeology Research Unit, Battelle Northwest Laboratory

TABLE OF CONTENTS

	Page
I. INTRODUCTION	F.1
II. DISCUSSION	F.1
A. Past and Present Ground Disposal Practices	F.1
B. Present Status of Radionuclides in Subsurface Soils	F.2
C. Effects of Increased Water Table on Radionuclide Movement	F.5
D. Future Waste Discharge Practices and Occurrences	F.7
E. Future Applicable Research and Development	F.8
III. REFERENCES	F.9
TABLES	
I. SUBSURFACE LONG-LIVED RADIONUCLIDE INVENTORY - 200 AREAS	F.10
II. CUMULATIVE LONG-LIVED RADIONUCLIDE INVENTORY VERSUS DEPTH	F.11
FIGURES	
1. RADIOISOTOPE CONCENTRATION AS A FUNCTION OF DEPTH - WELL E13-3A - 216-BC CRIBSITE	F.12
2. Cs-137 ANALYSES OF DRILLING SAMPLES, WELL 29-C - 108 SX TANK	F.13
3. TANK 108-SX SUBSURFACE CS-137 CONCENTRATION	F.14
4. FLOW PATHS RESULTING FROM IRRIGATION OF FOUR SECTORS OF PROJECT LAND AND CONSTRUCTION OF BEN FRANKLIN DAM	F.15

APPENDIX F

EVALUATION OF THE EFFECTS OF INCREASED WATER TABLE ELEVATIONS ON 200 AREAS WASTE DISPOSAL

I. INTRODUCTION

A number of studies have been made in the past several years (References 1 through 6) with the objective, either primary or secondary, of determining changes in the Hanford Project ground water system resulting from potential alterations in land use, major changes in plant effluent disposal practices or other causative factors. The results of these studies, which utilize simulation modelling techniques, are directly applicable to Hanford Waste Management programs, and specifically to those parts of the programs concerned with the prevention of radionuclides in wastes from entering the surrounding environs (Columbia River) in radiologically significant amounts.

The purpose of this summary is to interrelate potential changes in ground water elevations and flow system with the resultant effects on waste radionuclides in the water table and overlying vadose (partially saturated) zone.

II. DISCUSSION

A. Past and Present Ground Disposal Practices

Basic waste management philosophy for the 200 Areas has been that the ground water beneath the project was not available to the general public, and thus, that the limiting factor on the contamination of the ground water was the eventuality that radionuclides would enter potable water supplies and cause additional radiation exposure to persons living outside the control area. Ground water control limits are placed on long-lived radionuclides directly beneath a disposal site, such that the disposal facility is removed from further use when the concentration of any long-lived radionuclide is detected in the ground water in concentrations approaching the Atomic Energy Commission drinking water limit for nonoccupational workers. Tritium and ruthenium are the exceptions to this general rule. Ground water limits are established for these two radionuclides at the boundary of the Hanford Project. Ground disposal of low-level and some intermediate-level liquid wastes has been, and continues to be, under rigidly controlled conditions. Such controls consist of decontamination of process wastes to the maximum practicable extent by in-plant treatment methods, the evaluation of both routine and nonroutine wastes for soil sorption characteristics prior to and concurrent with disposal, and routine monitoring of long-lived and short-lived radionuclides in the partially saturated and saturated zones. In addition, measures have been taken for the rapid detection of stored high-level and intermediate-level wastes that might enter the soil under accident

conditions (for example, waste tank or pipeline leak). Ground disposal of wastes, either intentional or accidental, is backed up by continuing research programs that are directed toward achieving the predictive capabilities desirable for assuring the continued safety of such operations.

Actual plant waste disposal studies continue to show that in most cases essentially all of the long-lived radionuclides of concern are held by soil reaction mechanisms within a few tens of feet beneath disposal facilities and well above the regional water table which is nominally 200 feet below the facilities in the 200 Areas. Also, the downward migration rates of these radionuclides, due to soil column drainage several years after facility retirement, is extremely slow -- on the order of several inches per year as a maximum. These observations confirm the predictions resulting from many years of laboratory research. Several fairly recent and extensive waste facility exploratory drilling and sampling programs (Reference 6, 7) also confirm the deposition patterns as have scintillation well logging studies carried out routinely in the 200 Areas. In the instances where long-lived radionuclides have been detected in ground water or in deep drilling samples, they were present in very low concentrations (at maximum 100 times above the recommended drinking water limits), in small total quantities, and only at locations quite close to the disposal facility. In no case has a high concentration front or zone of long-lived radionuclides (for example, concentrations approaching that noted at crib upper surfaces) been detected in close proximity to the regional water table. Despite the limited migration of radioisotopes through the soil, very low concentration "leakage" of radioisotopes, even those exibiting high soil uptake efficiencies, may occur into the water table after a significant volume of waste has been discharged to a facility. These low concentrations due to leakage have been taken into account in establishing the rigid ground water contamination limits for facility abandonment and replacement.

The subsequent movement or migration of trace quantities of long-lived radionuclides in ground water toward surface waters also is extremely slow due to soil sorption reactions occurring in the saturated zone. Typically, the rate is on the order of one-hundreth or less of the actual ground water movement rate (Reference 8). Thus, depending on the water movement rate and the types of earth materials through which the water moves, the travel (decay) time before entry into surface waters is likely to be several centuries or longer.

B. Present Status of Radionuclides in Subsurface Soils

Short-lived radionuclides that are well-retained by the soil are of little concern in that they rapidly decay to innocuous concentrations. Of more concern are the poorly sorbed isotopes having intermediate half-lives and the long-lived isotopes that are well-retained but will remain a potential hazard for decades or centuries.

One-year ruthenium-106 - rhodium-106 is poorly removed by the soil from many waste effluent streams and does appear as the major short-lived radiocontaminant in ground water, and travels at about the same rate as the ground water. The present major travel path from the 200 Areas to the Columbia River, however, affords appreciable time (approximately 10 years) for the ruthenium-106 and its daughter to decay to very low concentrations prior to river entry. For the past several years the ruthenium-106 concentration front that approaches the recommended nonoccupational drinking water limit has been stabilized at a distance of from 5 to 7 miles from 200 East Area, about half way to the Columbia River (Reference 9). This equilibrium is due to a combination of essentially steady state ground water flow conditions, dispersion effects of the heterogeneous soils, the amount of radionuclide discharged to disposal facilities, and the decay (travel) time.

Tritium produced by the fission reaction is present in 200 Area wastes in measurable concentrations (Reference 10); and, like ruthenium-106, is not retained appreciably by the soil. Ground water monitoring results over the past 6 years have shown that the ^{3}H concentration front approaching nonoccupational drinking water limits has reached equilibrium at about 7 miles from the 200 East Area, and is at or below the background ^{3}H concentration in the Columbia River prior to river entry. Decay during travel in the ground water is much less effective in reducing the concentration of 13-year ^{3}H than is the case for ruthenium-106. The major factors involved in stabilizing the ground water ^{3}H plume appear to be the quantity of radionuclide discharged and dispersion in the flow system.

Primary sources of long-lived radionuclides in subsurface soils are disposal facilities and waste storage tank leaks. That activity associated with shallow-buried dry waste is of much less concern, since even if it should become mobile by some possible leaching action, it would be immediately sorbed and retained by the soil beneath the burial trenches. A recent drilling and sampling program undertaken in the 200 West burial grounds did not reveal any indication that leaching of these wastes has occurred (Reference 11).

The table below presents the amounts of long-lived radioisotopes discharged to the soil from various sources. The present inventory is somewhat less than this due to decay.

Quantities of Long-Lived Radionuclides Discharged to Ground from Various 200 Area Sources (Reference 12)

Source	Radionuclide Cs-137 (Ci)	Sr-90 (Ci)	Pu (kg)
Tank Leaks	90 000	*	*
Trenches - Specific Soil Retention	30 000	10 000	2
Cribs	13 000	32 000	230
Swamps	500	600	9
Dry Wells	400	100	8

*Strontium and plutonium are predominately in the sludge layer and thus would be in much lower amounts in the soil than cesium.

As stated earlier, the bulk of these radioisotopes (more than 99 percent) are retained by the soil immediately beneath the waste facility. Figure 1 presents results that are typical of those obtained from exploratory drilling and sampling studies of disposal sites (Reference 6). Cesium-137 and strontium-90 concentrations in the soil decrease by factors of 500 or more within about 40 feet of the bottom of the facility.

Figures 2 and 3 show typical results obtained in waste tank leak studies (Reference 13). Figure 2 presents information on cesium-137 distribution with depth. No significant contamination was found at depths greater than about 20 feet below the tank bottom level. Figure 3 shows the rapid decrease in cesium-137 concentrations (at a depth of 60 feet below the surface) radially from the leak location. Even for the relatively high-salt supernate that leaked into the soil, cesium-137 uptake and retention was appreciable.

Tables I and II present information on the estimated quantities of long-lived radionuclides stored on soils beneath 200 Area waste disposal sites and within 100 feet of the present water table (Reference 14). The estimates were based on analytical results of samples obtained in exploratory drilling programs and from gamma scintillation well logging records. The sites evaluated have received over 80 percent of the reported radioactive material discharged to ground in the 200 Areas. Based on available information, the wastes stored beneath the remainder of the sites would not be expected to measurably increase the tabulated values. The accuracy of the estimates is believed to be well within an order of magnitude, and any bias in the estimates is believed to be in excess of the true values.

C. Effects of Increased Water Table on Radionuclide Movement

Increases in the water table elevation beneath 200 Area waste disposal sites will subject radionuclides now retained in the deep soil zones to the leaching action of ground water. Also, such changes may be accompanied by significant alterations in flow paths and travel times for the leached radionuclides and for those already in the ground water. Since the flow system goes through a rather gradual transient phase prior to reaching steady-state conditions, travel times and paths will be changing continually during the approach to equilibrium. These transient conditions are extremely difficult to evaluate for large, heterogeneous flow systems; the accuracy of such evaluations are greatly dependent upon accurate definition of the causative factors that might bring about changes in the flow system, knowledge of the soil characteristics (for example, permeability) of the newly saturated materials and the availability of good analytical models that at this time are nonexistent.

If the conditions can be specified that contribute to water table changes (for example, the boundaries of an area contemplated for irrigation development and the anticipated ground water recharge rate), then a steady-state solution of the effects on water table elevation can be obtained. Comparison of new calculated steady-state conditions with present ones yields qualitative indications of transient phase conditions. However, even to effect a steady-state solution it is necessary that a specific set of assumed conditions be stipulated. Past experience and recent simulation modelling studies have provided information relative to the effects on the water table of water additions at various locations on the project. Most apparent from experience is the relatively rapid initial buildup of the ground water mound beneath 200 Weat Area due to plant operations, about 60 feet in 7 years.

A study was just completed in which the irrigation of four specific areas on the Hanford Project was simulated, by digital computer methods, to determine the integrated effects on the water table beneath the project. The irrigated areas, shown in Figure 4, and totalling more or less 55 square miles, consist of about 10 sections of land in the Horn Rapids Triangle (A), about 29 sections north of the 300 Area (B), 10 sections west of 200 West Area (C), and 6 sections west of the Yakima Barricade (D). The study also assumed that the Ben Franklin Dam would be in place with a reservoir elevation of 400 feet and a nominal river flow rate of 150,000 cubic feet per second. The integrated water table rises were predicted to be about 80 feet beneath 200 West Area and 40 feet beneath 200 East Area. The arrows on Figure 4 indicate the probable directions of ground water flow from various locations in the vicinity of the 200 Areas. Water table increases much in excess of 40 feet beneath 200 East Area should be evaluated from the standpoint of the development of seepage onto the ground surface. The topography of several areas along Gable Mountain, particularly near the west end, is such that ground water (and contained radionuclides) could form surface ponds

at a number of low areas and possibly surface contamination control problems.

Estimates were made of the minimum travel times for ground water to move from beneath 200 Area disposal sites to the river. The shortest travel time for ground water leaving the inundated crib sites, 12 to 13 years, is approximately along the path of the arrow pointing north and then northeast from between Gable Mountain and Gable Butte. The accuracy of travel time estimates, in this case, is related directly to the accuracy of soil permeabilities used in the model. Permeabilities for areas north of Gable Mountain are not known as accurately as desired; therefore, the uncertainty of the calculated travel times may be relatively high.

The minimum travel time is nearly the same as the present travel time toward the southeast from 200 East Area and also as that predicted in the Ben Franklin Dam study (Reference 6). Therefore, conditions relative to river entry of poorly-sorbed radionuclides (ruthenium-106 and 3_H) now in the ground water or those that will enter in the future (assuming no significant changes in plant operating or waste disposal practices) are essentially the same as those discussed earlier. Appreciable reductions in the quantities of ruthenium-106 and/or 3_H discharged to ground will result in less total activity entering the river and may also result, in time, in significantly reduced distances of the various concentration level "fronts" from the 200 Areas. Dispersion (and related phenomena) may well play a major role in this latter consideration, as it evidently does along present travel paths. Therefore, it is not possible to make generalized definitive statements along this vein without more detailed investigations.

The quantity of long-lived radionuclides subjected to leaching by the predicted increases in water table elevations would consist of about 30 curies of cesium-137, 60 curies of strontium-90, and 30 curies of cobalt-60 (from Table III). Certainly, the leaching would not occur rapidly but would extend over a period of at least several years due to the gradual nature of the increases in water table elevation. Also, these long-lived radionuclides, with the possible exception of 5-year cobalt-60, would move at a rate much slower than the water movement rate and thus experience appreciable decay. Although decay would result in some reduction in cobalt-60 concentrations, the major factors limiting cobalt-60 concentrations in potable waters would be the leach rates (rate of water table rise), dispersion and finally river dilution.

If it is assumed that the water table rises at the relatively rapid rate of ten feet per year and the movement rate of strontium and cesium is conservatively 1/50th of the ground water flow rate, a concentration reduction factor of about 10^6 (600-year travel time, 30-year half-life) would be applicable to the amounts of strontium-90 and cesium-137 subjected to leaching and, on a daily basis, assuming leaching over a 5-year period, a further reduction by a factor of about 1500 would be applicable. On this basis the quantities of

strontium-90 and cesium-137 at river entry locations would be about 4×10^{-2} and 2×10^{-2} microcuries per day, respectively. Assuming complete river dilution the strontium and cesium concentrations in the river contributed from 200 Area leaching would be approximately 1×10^{-13} microcuries per liter and 5×10^{-14} microcuries per liter, respectively. These are well below the nonoccupational drinking water limits of 3×10^{-4} microcuries per liter for strontium and 2×10^{-3} microcuries per liter for cesium.

The above evaluation assumes that the ion exchange characteristics of the soils through which the wastes will flow are reasonably favorable and similar to those existing in 200 and 100 Area subsoils. If the leached radionuclides enter the more permeable channels adjacent to Gable Mountain, where travel times of only several years are indicated, they will flow in the relatively coarse sands and gravels where radionuclide movement retardation is not expected to be the same order of magnitude as that used in the previous analysis. If such should occur, greater reliance would need to be placed on the dilution capacity of the river to reduce concentrations to acceptable levels. If the extremely pessimistic assumptions were made that no soil holdup were to occur, river concentrations 10^6 higher than those indicated in the preceding paragraph would result and concentrations of strontium and cesium would still be well below applicable limits.

D. Future Waste Discharge Practices and Occurrences

The indicated minimal consequences associated with the predicted water table elevation increases under the 200 Areas are based on conditions as they now exist and the ability to analyze these conditions using existing data and methods. Admittedly, there are uncertainties associated with the data available and the analysis methods; however, consistent with the approach taken in past studies of this type, the evaluation tends toward assumptions that are more conservative than later observed.

The extension of this analysis from the viewpoint of future changes in waste discharge, either intentional or accidental, that might result in significant increases in the quantities of radionuclides in the deep soil zones of concern (for example, excessive tank leakage, change or temporary loss of waste management operational controls) should not be on an irreversible basis. That is, it appears advisable that any areas released for possible water amendment be on a sequential basis such that the resultant effects on the flow system can be evaluated to confirm or modify prior analysis. Also, the desirable approach of sequential or stepwise development will eliminate sudden, large flow system changes and preserve the capability to take reversible steps if continued observations and analysis should indicate such are necessary.

The increases in water table elevation under the 200 Areas would result in a reduced "margin of safety" with respect to waste storage tank leaks. This is particularly true in the case of 200 West Area

where the predicted 80-foot water table rise would reduce the partially saturated soil column beneath waste tank farms from the present nominal 150 feet to about 70 feet. Considering this latter value, the present relatively high radionuclide inventory in the soils beneath several of the failed vessels would then be only about 50 feet above the new water table. Continued close observation for possible waste tank leaks and provisions for immediate corrective action would be strongly indicated because of the decreased safety margin.

E. Future Applicable Research and Development

The degree of accuracy and confidence that can be placed on an analysis of this type is related to the adequacy of data in the form of knowledge of radionuclide disposition in the subsurface soils, information on radionuclide soil reactions and soil characterization parameters (for example, permeabilities). Also, the ability to analyze ground water and radionuclide movement accurately through the application of simulation techniques is unquestionably related to the availability of field data with which to match results.

Any future field and laboratory studies that will improve the quality and increase the quantity of the input data will directly reinforce the analysis, as will the development and application of improved simulation techniques. Quite evident from this study is the apparent role played by dispersion and/or diffusion mechanisms in reducing concentrations of radiocontaminants with distance from the waste discharge sites. The development of analysis capabilities and acquisition of input data needed to evaluate these phenomena more adequately are desirable. The questions posed by poorly sorbed (possibly chemically complexed) radionuclides such as cobalt-60 should be answered through more detailed and comprehensive studies.

The research and development results obtained from the recently started and hopefully continuing Movement of Radionuclides Through Hanford Soils program will greatly assist in increasing the confidence of these type studies. Also, continuing field investigations of radionuclide distribution beneath waste tanks and disposal facilities, possibly under Process Technology funding, will do much toward providing needed answers.

III. REFERENCES

1. Personal Communication, W. A. Haney to R. J. Sloat, "Effects of Irrigation on the Project Ground Water System," March 30, 1967.

2. D. B. Cearlock, et al, "Rattlesnake Mountain Slope Irrigation Study," January 6, 1966.

3. Personal Communication, D. B. Cearlock to O. J. Elgert, "Predicted Effects on the Hanford Ground Water System Resulting from Irrigation of Horn Rapids Triangle and Upper Cold Creek Valley," October 4, 1967.

4. R. G. Geier, "Program Review - Ground Disposal of Reactor Effluent," DUN-3259, October 18, 1967.

5. R. J. Sloat, "Study of Land Requirements," ISO-842, May 8, 1967.

6. W. A. Haney (editor), "The Effects of Ben Franklin Dam on Hanford," BNWL-412, May, 1967.

7. W. A. Haney and C. E. Linderoth, "Exploratory Field Study of a Ground Disposal Facility," HW-60115, May 15, 1959.

8. B. F. Hajek, "Adsorption, Migration, and Dispersion of Strontium and Cesium in an N-Area Soil," BNWL-CC-208, July 7, 1965.

9. J. R. Eliason, "Earth Sciences Waste Disposal Investigations, January - June, 1967," in preparation.

10. W. A. Haney, et al, "Fission Product Tritium in Separations Wastes and in the Ground Water," HW-74536, August 1, 1962.

11. Personal Communication, J. R. Raymond to W. A. Haney, "Subsurface Sampling - Burial Garden Number 2," April 27, 1965.

12. P. W. Smith and R. E. Tomlinson, "Hanford High Level Waste Management Reevaluation Study," ISO-981, August 31, 1967.

13. J. R. Raymond and E. G. Shdo, "Characterization of Subsurface Contamination in the SX Tank Farm," BNWL-CC-701, June 13, 1966.

14. Personal Communication, W. A. Haney to R. J. Sloat, "Long-Lived Radionuclides on Soils Beneath 200 Areas," October 6, 1967.

15. M. W. McConiga, "Changes in the Hanford Ground Water Table, 1944-1955," HW-40469, December 1, 1955.

APPENDIX F

TABLE I

SUBSURFACE LONG-LIVED RADIONUCLIDE INVENTORY - 200 AREAS

Disposal Site	Distance of Zone Above Present Water Table (Feet)	Radionuclide Content In Each Zone (Curies) Co-60	Sr-90	Cs-137
216-BY Cribs	0-25	15	7	15
	25-50	15	9	8
	50-75	30	11	25
	75-100	30	12	4
216-A-5 and A-10 Cribs*	0-25	<0.1	<1	<0.1
	25-50	<0.1	<1	<0.1
	50-75	<0.1	<0.5	<0.1
	75-100	<0.1	<0.5	<0.1
216-BC Cribs*	0-25	<0.1	<7	<0.5
	25-50	<0.1	<7	<0.5
	50-75	<0.1	<3	<0.2
	75-100	<0.1	<3	<0.2
216-A-8 Cribs*	0-25	<0.1	<4	<1.2
	25-50	<0.1	<4	<0.8
	50-75	<0.1	<2	<1
	75-100	<0.1	<2	<0.5
216-A-24 Cribs*	0-25	<0.1	<2	<0.1
	25-50	<0.1	<2	<0.1
	50-75	<0.1	<1	<0.1
	75-100	<0.1	<1	<0.1
216-S-1 and 2 Cribs	0-25	<0.1	5	<0.1
	25-50	<0.1	2.5	<0.1
	50-75	<0.1	2	<0.1
	75-100	<0.1	2.5	<0.1
216-S-7 Crib	0-25	<0.1	0.4	<0.1
	25-50	<0.1	1.1	<0.1
	50-75	<0.1	4.8	1.7
	75-100	<0.1	2.1	6.8
216-S-9 Crib*	0-25	<0.1	<1	<0.1
	25-50	<0.1	<1	<0.1
	50-75	<0.1	<0.4	<0.1
	75-100	<0.1	<0.4	<0.1
216-TY Cribs*	0-25	<0.1	<0.8	<0.1
	25-50	<0.1	<0.8	<0.1
	50-75	<0.1	<0.3	<0.1
	75-100	<0.1	<0.3	<0.1

* Isotope detection limits used for calculations; Concentrations in drilling samples did not exceed detection limit.

APPENDIX F

TABLE II

CUMULATIVE LONG-LIVED RADIONUCLIDE INVENTORY VERSUS DEPTH

200 East Area

Distance of Zone Above Present Water Table (Feet)	Radionuclide Content in Zone (Curies)		
	Co-60	Sr-90	Cs-137
0-25	15	21	17
0-50	30	44	26
0-75	45	71	52
0-100	60	98	58

200 West Area

0-25	<0.1	7	<1
0-50	<0.2	13	<1
0-75	<0.3	21	3
0-100	<0.4	28	10

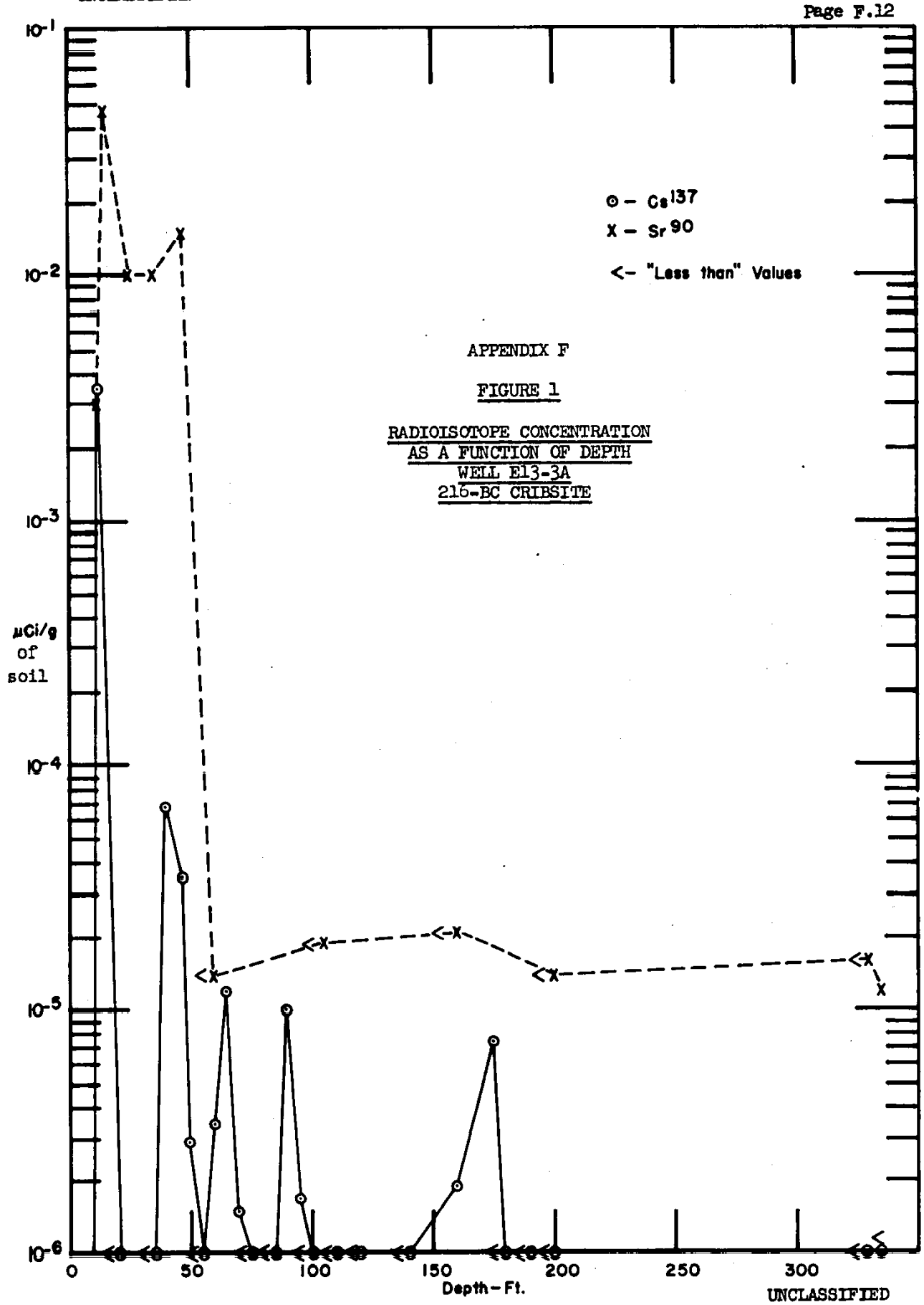

APPENDIX F

FIGURE 1

RADIOISOTOPE CONCENTRATION
AS A FUNCTION OF DEPTH
WELL E13-3A
216-BC CRIBSITE

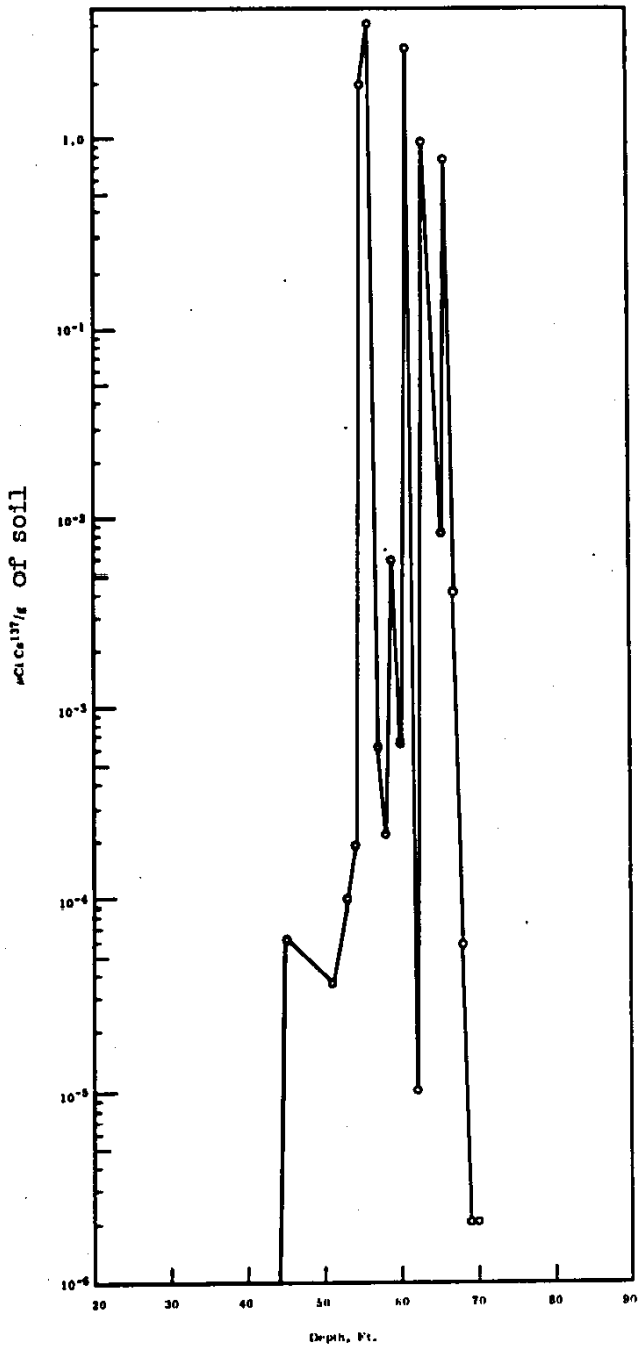

APPENDIX F

FIGURE 2

Cs^{137} Analyses of Drilling Samples, Well 29C - 108 SX Tank

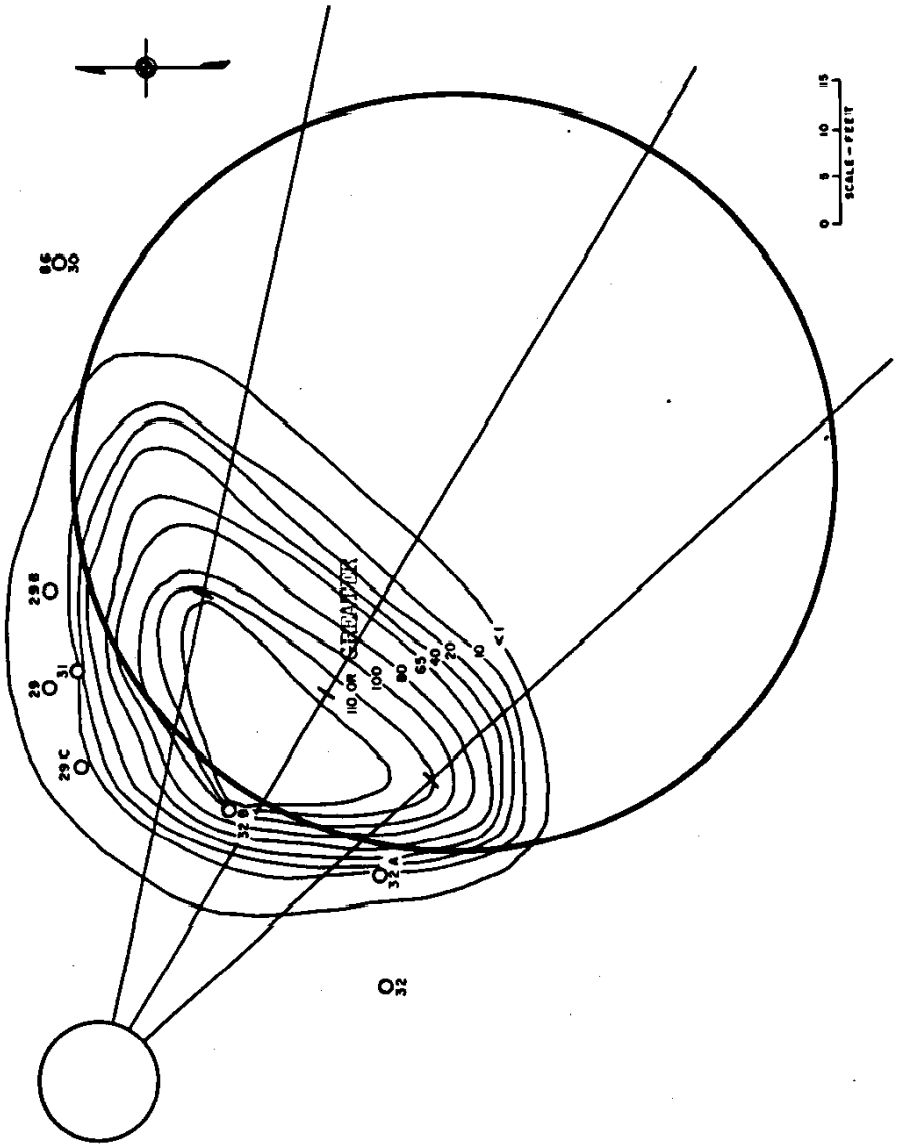

APPENDIX F

FIGURE 3

Tank 108-SX Subsurface Cs^{137} Concentration (µci/gram), 60 feet

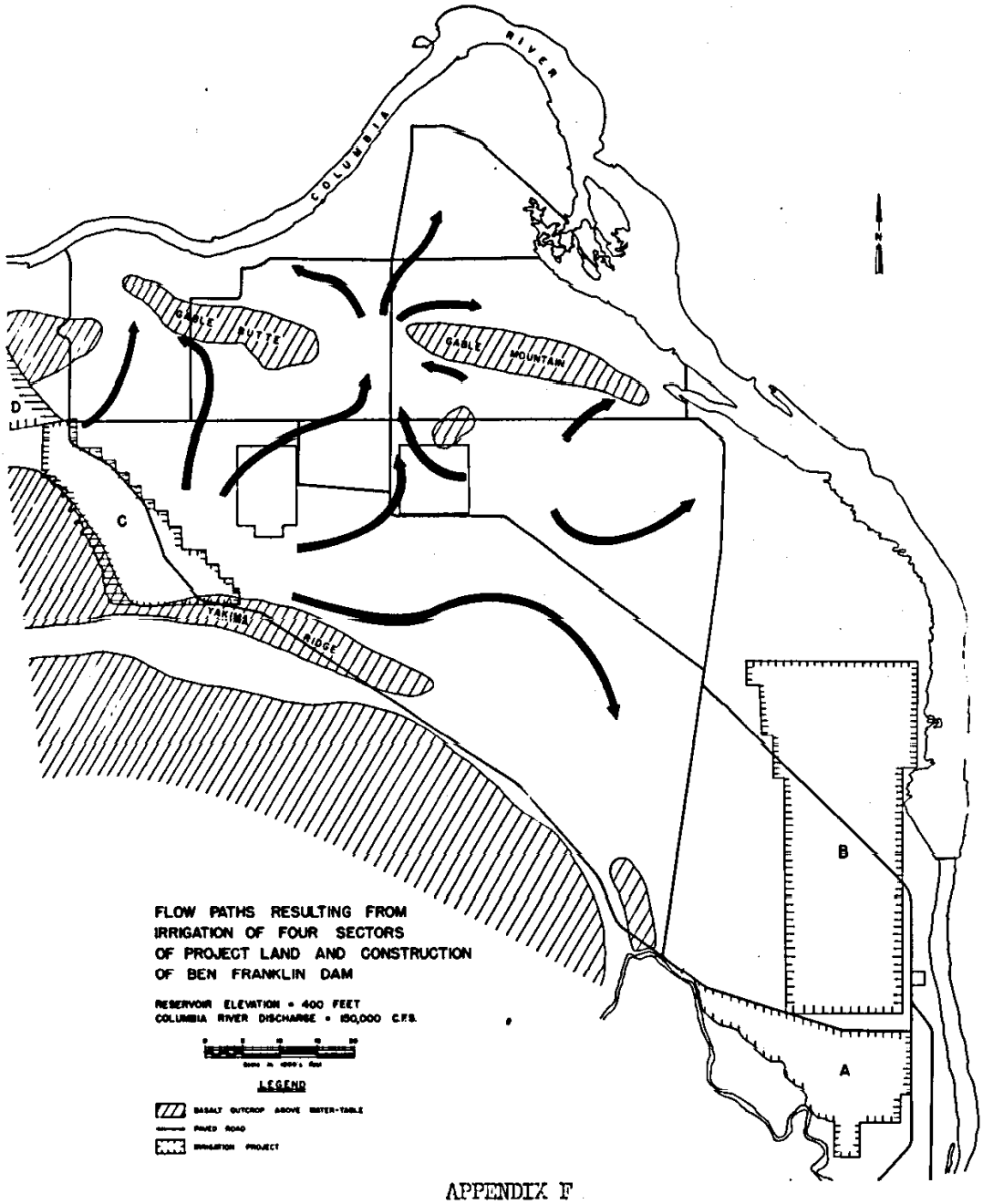

APPENDIX F

FIGURE 4