Department of Energy
Richland Operations Office
P.O. Box 550
Richland, Washington 99352

15-AMRP-0008

OCT 09 2014

Ms. J. A. Hedges, Program Manager
Nuclear Waste Program
State of Washington
Department of Ecology
3100 Port of Benton Blvd.
Richland, Washington 99354

Dear Ms. Hedges:

TRANSMITTAL OF APPROVED WASTE SITE RECLASSIFICATION FORM AND SUPPORTING DOCUMENTATION FOR THE 100-N-84:6, 100-N AREA CHEMICAL AND PROCESS SEWER PIPELINES, REVISION 0

Attached for your use is the approved Waste Site Reclassification Form No. 2014-093 and supporting, "Remaining Sites Verification Package for the 100-N-84:6, 100-N Area Chemical and Process Sewer Pipelines," Rev. 0. If you have questions, please contact me or your staff may contact Joanne Chance, of my staff, at (509) 376-0811.

Sincerely,

Mark S. French, Director
River Corridor Division

AMRP:JCC

Attachment

cc w/attach:
N. M. Menard, Ecology
Administrative Record, H6-08

cc w/o attach:
R. D. Cantwell, WCH
S. L. Feaster, WCH
D. L. Plung, WCH
J. P. Shearer, CHPRC

WASTE SITE RECLASSIFICATION FORM

Operable Unit: 100-NR-1 **Control No.:** 2014-093

Waste Site Code(s)/Subsite Code(s): 100-N-84:6

Reclassification Category: Interim ☒ Final ☐

Reclassification Status: Closed Out ☒ No Action ☐ Rejected ☐
RCRA Post closure ☐ Consolidated ☐ None ☐

Approvals Needed: DOE ☒ Ecology ☒ EPA ☐

Description of current waste site condition:

The 100-N-84:6, 100-N Area Chemical and Process Sewer Pipelines subsite is 1 of 10 subsites associated with the 100-N-84, 100-N Miscellaneous Pipelines waste site. The 100-N-84 waste site, part of the 100-NR-1 Operable Unit, was added to the *Interim Action Record of Decision for the 100-NR-1 and 100-NR-2 Operable Units, Hanford Site, Benton County, Washington* (100-N Area ROD), U.S. Environmental Protection Agency, Region 10, Seattle, Washington (EPA 1999), as a candidate site for confirmatory sampling via the *Explanation of Significant Differences for the 100-NR-1 and 100-NR-2 Operable Units Interim Remedial Action Record of Decision, Hanford Site, Benton County, Washington*, U.S. Environmental Protection Agency, Region 10, Seattle, Washington (EPA 2011). The 100-N-84:6 subsite was recommended for remedial action without confirmatory sampling.

Portions of the 100-N-84:6 subsite were removed by the Deactivation, Decontamination, Decommissioning, and Demolition Project in support of the demolition and removal of the 100-N river structures. Installation of a haul road was necessary to gain access to the structures; therefore, segments of the 100-N-84:6 pipelines that were located within the roadway boundary were removed and disposed. Verification samples were collected per an approved sampling agreement and the excavation was backfilled.

Two segments of the 100-N-84:6 pipelines were approved to be left in place per an agreement with the Washington State Department of Ecology. These pipeline segments were not remediated and subsequently were not included in the verification sample design. Additionally, several segments of the 100-N-84:6 pipeline subsite were removed with previous waste site remediations and were not included in the 100-N-84:6 sample design for verification sampling.

Remedial actions at the 100-N-84:6 subsite were conducted from April 10, 2013, through March 4, 2014. The excavation depth ranged from approximately 1 to 2 m (3.3 to 6.7 ft) below ground surface resulting in approximately 3,447 bank cubic meters (4,509 bank cubic yards) of soil and pipeline debris being removed for disposal at the Environmental Restoration Disposal Facility (ERDF). The waste material was direct loaded from the excavation; therefore, no waste staging pile area was generated. Additionally, there is no overburden soil stockpile associated with the 100-N-84:6 pipeline subsite. No anomalous material or stained soil was observed during the remediation.

Cleanup verification samples were collected on June 13, 2011, and February 6, 2014, to support the removal of the river structures and backfilling of established roadways, respectively. Cleanup verification sampling was completed on May 21, 2014. The sampling was performed to determine if the waste site met the remedial action objectives (RAOs) and remedial action goals (RAGs) established by the *Remedial Design Report/Remedial Action Work Plan for the 100-N Area* (100-N Area RDR/RAWP), DOE/RL-2005-93, Rev. 1, U.S. Department of Energy, Richland Operations Office, Richland, Washington (DOE-RL 2013), and the 100-N Area ROD (EPA 1999). The selected remedy involved (1) excavating the site to the extent required to meet specified soil cleanup levels, (2) disposing of contaminated excavation materials at ERDF, (3) demonstrating through verification sampling that cleanup goals have been achieved, and (4) proposing the site for reclassification to Interim Closed Out.

WASTE SITE RECLASSIFICATION FORM

Operable Unit: 100-NR-1 **Control No.:** 2014-093

Waste Site Code(s)/Subsite Code(s): 100-N-84:6

Basis for reclassification:

The verification sampling and modeling results for the 100-N-84:6 subsite demonstrate that the site meets the RAOs and corresponding RAGs established in the 100-N Area RDR/RAWP (DOE-RL 2013) and the 100-N Area ROD (EPA 1999) to support a reclassification to Interim Closed Out. These sampling and modeling results established that residual contaminant concentrations do not preclude any future uses (as bounded by the rural-residential scenario) and allow for unrestricted use of shallow zone soils (i.e., surface to 4.6 m [15 ft] deep). The results also demonstrate that residual contaminant concentrations are protective of groundwater and the Columbia River. Contamination above direct exposure levels was not observed in shallow zone soils and is concluded to not exist in deep zone soils; therefore, institutional controls to prevent uncontrolled drilling or excavation into the deep zone soil are not required. The basis for reclassification is described in detail in the *Remaining Sites Verification Package for the 100-N-84:6, 100-N Area Chemical and Process Sewer Pipelines* (attached).

Regulator comments:

Waste Site Controls:

Engineered Controls: ☐ Yes ☒ No Institutional Controls: ☐ Yes ☒ No O&M Requirements: ☐ Yes ☒ No

If any of the Waste Site Controls are checked Yes, specify control requirements including reference to the Record of Decision, TSD Closure Letter, or other relevant documents:

J. P. Neath	J P Neath	9/30/14
DOE Federal Project Director (printed)	Signature	Date
N. Menard	Nina M. Menard	10/1/14
Ecology Project Manager (printed)	Signature	Date
NA		
EPA Project Manager (printed)	Signature	Date

REMAINING SITES VERIFICATION PACKAGE FOR THE 100-N-84:6, 100-N AREA CHEMICAL AND PROCESS SEWER PIPELINES

Attachment to Waste Site Reclassification Form 2014-093

October 2014

REMAINING SITES VERIFICATION PACKAGE FOR THE 100-N-84:6, 100-N AREA CHEMICAL AND PROCESS SEWER PIPELINES

EXECUTIVE SUMMARY

The 100-N-84:6, 100-N Area Chemical and Process Sewer Pipelines subsite, part of the 100-NR-1 Operable Unit, is 1 of 10 subsites associated with the 100-N-84, 100-N Miscellaneous Pipelines waste site. The 100-N-84:6 subsite consisted of pipelines used for disposal of various chemicals utilized in the pipeline source buildings. The subsite also included several pipeline segments categorized as radioactive drains that have been dispositioned with other waste sites (100-N-61:2 and 100-N-66). Therefore, radionuclides were not contaminants of concern for the 100-N-84:6 subsite. The 100-N-84 waste site was added to the *Interim Action Record of Decision for the 100-NR-1 and 100-NR-2 Operable Units, Hanford Site, Benton County, Washington* (100-N Area ROD) (EPA 1999) as a candidate site for confirmatory sampling via the *Explanation of Significant Differences for the 100-NR-1 and 100-NR-2 Operable Units Interim Remedial Action Record of Decision, Hanford Site, Benton County, Washington* (EPA 2011). The 100-N-84:6 subsite was recommended for remedial action without confirmatory sampling (WCH 2010).

Portions of the 100-N-84:6 pipeline subsite were removed by the Deactivation, Decontamination, Decommissioning, and Demolition Project in support of the demolition and removal of the 100-N river structures. Installation of a haul road was necessary to gain access to the structures; therefore, segments of the 100-N-84:6 pipelines that were located within the roadway boundary were removed and disposed. Verification samples were collected per an approved sampling agreement with the Washington State Department of Ecology (Ecology) (WCH 2011b) and the excavation was backfilled.

French drain 1 (formerly part of the 100-N-103:1, 100-N Steam Condensate French Drains waste site) was removed during the demolition of the 108-N Building (WCH 2013d). The french drain was added to the 100-N-84:6 pipeline subsite because it was within the planned excavation footprint of the 100-N-84:6 pipeline remediation.

Two segments of the 100-N-84:6 pipelines were approved to be left in place per the "100-N-84:5/6 Proposal to Leave Segments in Place" (WCH 2013a). These pipeline segments were not remediated and subsequently were not included in the verification sample design. Additionally, several segments of the 100-N-84:6 pipeline subsite were removed with previous waste site remediations and were not included in the 100-N-84:6 sample design for verification sampling (WCH 2014d). Segment 16, part of the 100-N-84:8 pipeline subsite, was removed and disposed with the 100-N-84:6 remediation.

Remedial actions were conducted from April 10, 2013, through March 4, 2014. The excavation depth ranged from 1.0 to 2.0 m (3.3 to 6.7 ft) below ground surface resulting in approximately 3,447 bank cubic meters (4,509 bank cubic yards) of soil and pipeline debris being removed for disposal at the Environmental Restoration Disposal Facility (ERDF). There are no overburden

soil stockpiles or waste staging pile areas associated with the 100-N-84:6 subsite. No anomalous material was observed during the remediation.

Two focused verification soil samples were collected under previous agreements with Ecology. One focused verification soil sample and one duplicate sample were collected on June 13, 2011, per the "100-N FR South River Road Agreement" (WCH 2011b), and one focused verification soil sample was collected on February 6, 2014, per the "Request to Verification Sample and Backfill Immediately Portions of 100-N-84 Pipeline Subsites that Cross Under Established Roadways" (WCH 2014e) agreement. Verification soil sampling was completed on May 21, 2014, with the collection of 12 statistical and 2 quality control samples, plus 1 focused sample for french drain 1, from the excavation area. A summary of the cleanup evaluation for the soil sampling results against the applicable remedial action goals (RAGs) is presented in Table ES-1.

Table ES-1. Summary of Remedial Action Goals for the 100-N-84:6 Subsite. (2 Pages)

Regulatory Requirement	Remedial Action Goals	Results	Remedial Action Objectives Attained?
Direct Exposure – Radionuclides	Attain a dose rate of <15 mrem/yr above background over 1,000 years.	Radionuclides were not COPCs for the 100-N-84:6 subsite.	NA
Direct Exposure – Nonradionuclides	Attain individual COPC direct exposure RAGs.	All individual COPC concentrations are below the direct exposure criteria.	Yes
Risk Requirements – Nonradionuclides	Attain a hazard quotient of <1 for all individual noncarcinogens.	The hazard quotients for individual nonradionuclide COPCs are <1.	Yes
	Attain a cumulative hazard quotient of <1 for noncarcinogens.	The cumulative hazard quotient for the 100-N-84:6 subsite (3.1×10^{-1}) is <1.	
	Attain an excess cancer risk of $<1 \times 10^{-6}$ for individual carcinogens.	The excess cancer risk for individual carcinogens are $<1 \times 10^{-6}$.	
	Attain a cumulative excess cancer risk of $<1 \times 10^{-5}$ for carcinogens.	The cumulative excess cancer risk (5.6×10^{-7}) is $<1 \times 10^{-5}$.	

Table ES-1. Summary of Remedial Action Goals for the 100-N-84:6 Subsite. (2 Pages)

Regulatory Requirement	Remedial Action Goals	Results	Remedial Action Objectives Attained?
Groundwater/River Protection – Radionuclides	Attain single COPC groundwater and river RAGs.	Radionuclides were not COPCs for the 100-N-84:6 subsite.	NA
	Attain National Primary Drinking Water Regulations [a]: 4 mrem/yr (beta/gamma) dose standard to target receptor/organ.		
	Meet drinking water standards for alpha emitters: the more stringent of 15 pCi/L MCL or 1/25th of the derived concentration guide for DOE Order 5400.5 [b].		
	Meet total uranium standard of 30 µg/L (21.2 pCi/L) [c].		
Groundwater/River Protection – Nonradionuclides	Attain individual nonradionuclide groundwater and Columbia River cleanup requirements.	Chromium (total), copper, manganese, vanadium, zinc, total PCBs (aroclor-1254 and aroclor-1260), benzo(a)anthracene, and benzo(b)fluoranthene exceeded soil RAGs for groundwater and/or river protection. However, based on RESRAD modeling discussed in Appendix C of the 100-N Area RDR/RAWP (DOE-RL 2013), it is predicted that the residual concentrations of these contaminants will not reach groundwater (and thus the Columbia River) within 1,000 years [d].	Yes

[a] "National Primary Drinking Water Regulations" (40 *Code of Federal Regulations* 141).
[b] *Radiation Protection of the Public and Environment* (DOE Order 5400.5).
[c] Based on the isotopic distribution of uranium in the 100 Area, the 30 µg/L MCL corresponds to 21.2 pCi/L. Concentration-to-activity calculations are documented in *Calculation of Total Uranium Activity Corresponding to a Maximum Contaminant Level for Total Uranium of 30 Micrograms per Liter in Groundwater* (BHI 2001).
[d] Based on RESRAD modeling discussed in Appendix C of the 100-N Area RDR/RAWP (DOE-RL 2013), residual concentrations of chromium (total), copper, manganese, vanadium, zinc, aroclor-1254, aroclor-1260, total PCBs, benzo(a)anthracene, and benzo(b)fluoranthene are not predicted to migrate more than 2.6 m (8.5 ft) vertically in 1,000 years (based on the lowest soil-partitioning coefficient of these contaminants [copper] of 22 mL/g). The vadose zone underlying the soil beneath the excavation is approximately 8 m (26.2 ft) thick. Therefore, residual concentrations of these contaminants are predicted to be protective of groundwater and consequently are protective of the Columbia River.

COPC = contaminant of potential concern
MCL = maximum contaminant level
NA = not applicable
PCB = polychlorinated biphenyl
RAG = remedial action goal
RDR/RAWP = Remedial Design Report/Remedial Action Work Plan
RESRAD = RESidual RADioactivity (dose model)

The results of the verification sampling were used to make reclassification decisions for the 100-N-84:6 subsite in accordance with the TPA-MP-14 procedure in the *Tri-Party Agreement Handbook Management Procedures* (DOE-RL 2011).

In accordance with this evaluation, the verification sampling results and modeling support a reclassification of this site to Interim Closed Out. The current site conditions achieve the remedial action objectives and the corresponding RAGs established in the *Remedial Design Report/Remedial Action Work Plan for the 100-N Area* (DOE-RL 2013) and the 100-N Area ROD (EPA 1999). These results show that residual soil concentrations support future land uses that can be represented (or bounded) by a rural-residential scenario. The sampling and modeling results also demonstrate that residual contaminant concentrations support unrestricted future use of shallow zone soil (i.e., surface to 4.6 m [15 ft] deep), and contaminant levels remaining in the soil are protective of groundwater and the Columbia River. Contamination above direct exposure levels was not observed in shallow zone soils and is concluded to not exist in deep zone soils; therefore, institutional controls to prevent uncontrolled drilling or excavation into the deep zone soil are not required.

Soil cleanup levels were established in the 100-N Area ROD (EPA 1999) based in part on a limited ecological risk assessment. Although not required by the 100-N Area ROD, a comparison against ecological risk screening levels has been made for the 100-N-84:6 subsite contaminants of potential concern and other constituents (Appendix A). Ecological screening levels from the *Washington Administrative Code* 173-340, “Model Toxics Control Act – Cleanup,” were exceeded for barium, boron, copper, and vanadium. The U.S. Environmental Protection Agency ecological soil screening levels were exceeded for cobalt, copper, manganese, vanadium, and zinc. Exceedance of screening values is intended to trigger additional evaluation and does not necessarily indicate the existence of risk to ecological receptors. Because the concentrations of cobalt are below the Hanford Site background values, it is believed that the presence of cobalt does not pose a risk to ecological receptors. All exceedances will be evaluated in the context of additional lines of evidence for risk to ecological receptors as part of the final closeout decision for this site.

REMAINING SITES VERIFICATION PACKAGE FOR THE 100-N-84:6, 100-N AREA CHEMICAL AND PROCESS SEWER PIPELINES

STATEMENT OF PROTECTIVENESS

The 100-N-84:6 subsite cleanup verification sampling data, site evaluations, and supporting documentation demonstrate that this site meets the objectives established in the *Remedial Design Report/Remedial Action Work Plan for the 100-N Area* (100-N Area RDR/RAWP) (DOE-RL 2013) and the *Interim Action Record of Decision for the 100-NR-1 and 100-NR-2 Operable Units, Hanford Site, Benton County, Washington* (100-N Area ROD) (EPA 1999). The results of verification sampling and modeling show that residual soil concentrations do not preclude any future uses (as bounded by the rural-residential scenario) and allow for unrestricted use of shallow zone soils (i.e., surface to 4.6 m [15 ft] deep). The results also demonstrate that residual contaminant concentrations are protective of groundwater and the Columbia River. Contamination above direct exposure levels was not observed in shallow zone soils and is concluded to not exist in deep zone soils; therefore, institutional controls to prevent uncontrolled drilling or excavation into the deep zone soil are not required.

Soil cleanup levels were established in the 100-N Area ROD (EPA 1999) based in part on a limited ecological risk assessment. Although not required by the 100-N Area ROD, a comparison against ecological risk screening levels has been made for the 100-N-84:6 subsite contaminants of potential concern (COPCs) and other constituents (Appendix A). Ecological screening levels from the *Washington Administrative Code* (WAC) 173-340, "Model Toxics Control Act – Cleanup," were exceeded for barium, boron, copper, and vanadium. The U.S. Environmental Protection Agency ecological soil screening levels were exceeded for cobalt, copper, manganese, vanadium, and zinc. Exceedance of screening values is intended to trigger additional evaluation and does not necessarily indicate the existence of risk to ecological receptors. Because the concentrations of cobalt are below the Hanford Site background values, it is believed that the presence of cobalt does not pose a risk to ecological receptors. All exceedances will be evaluated in the context of additional lines of evidence for risk to ecological receptors as part of the final closeout decision for this site.

GENERAL SITE INFORMATION AND BACKGROUND

The 100-N-84:6, 100-N Area Chemical and Process Sewer Pipelines subsite is 1 of 10 subsites associated with the 100-N-84, 100-N Miscellaneous Pipelines waste site. The 100-N-84:6 subsite consisted of pipelines for disposal of chemical waste, a dummy disposal pipeline, and a radioactive drain line. The 100-N-84:6 subsite also included a french drain. French drain 1 (formerly part of the 100-N-103:1, 100-N Steam Condensate French Drains) was added to the 100-N-84:6 subsite because it was within the 100-N-84:6 planned excavation footprint.

The segments of the 100-N-84:6 pipeline subsite were primarily located between the 100-N Area process buildings (105-N, 109-N, 182-N, 183-N, and 163-N). The overall site location map for the 100-N-84:6 subsite is provided in Figure 1.

Figure 1. 100-N-84:6 Subsite Location Map.

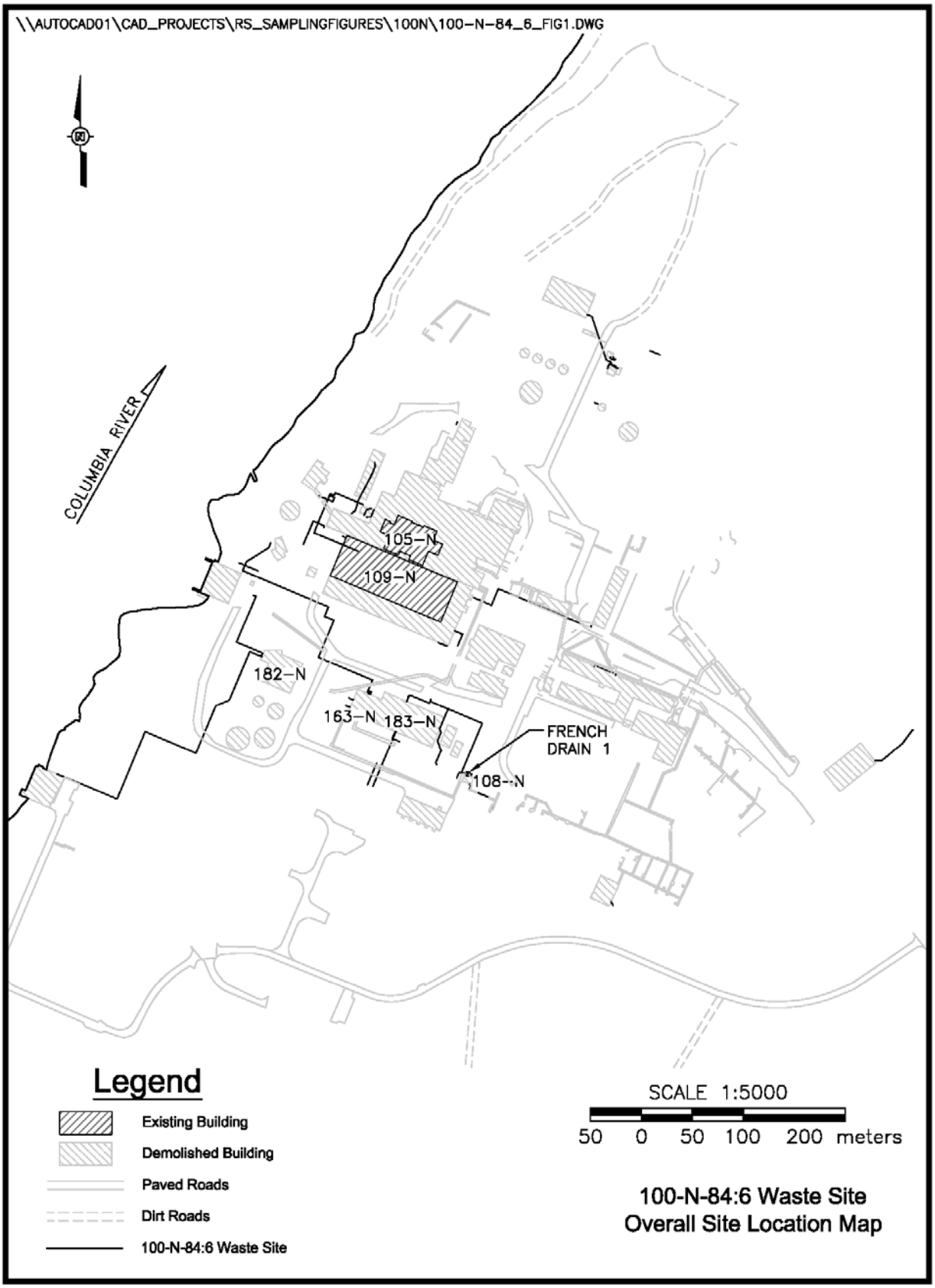

REMEDIAL ACTION SUMMARY

Portions of the 100-N-84:6 subsite were removed by the Deactivation, Decontamination, Decommissioning, and Demolition Project in support of the removal of the 100-N river structures. Installation of a haul road was necessary to gain access to the structures; therefore, segments of the 100-N-84:6 pipeline that were located within the roadway boundary were removed and disposed. A verification soil sample (J1J4H9) and a duplicate sample (J1J4J0) were collected per an approved sampling agreement with the Washington State Department of Ecology (Ecology) (WCH 2011b) and the excavation was backfilled.

French drain 1 (formerly part of the 100-N-103:1, 100-N Steam Condensate French Drains) was removed during the demolition of the 108-N Building (WCH 2013d). The french drain was added to the 100-N-84:6 pipeline subsite because it was within the planned excavation footprint of the 100-N-84:6 pipeline remediation.

Two segments of the 100-N-84:6 pipelines were approved to be left in place per the "100-N-84:5/6 Proposal to Leave Segments in Place" (WCH 2013a) agreement with Ecology. These pipeline segments were not remediated and subsequently were not included in the verification sample design. Additionally, several segments of the 100-N-84:6 pipeline subsite were removed with previous waste site remediations and were not included in the 100-N-84:6 sample design for verification sampling (WCH 2014d). Figure 2 shows the segments of pipeline that were not included in the sample design. Segment 16, part of the 100-N-84:8 pipeline subsite, was removed and disposed with the 100-N-84:6 remediation. Figure 3 shows the approximate location of Segment 16.

Remediation of the 100-N-84:6 subsite continued from April 10, 2013, through March 4, 2014. The depth of the remediation ranged from approximately 1.0 to 2.0 m (3.3 to 6.7 ft) below ground surface resulting in approximately 3,447 bank cubic meters (4,509 bank cubic yards) of soil and pipeline debris being removed for disposal at the Environmental Restoration Disposal Facility (ERDF). The pipeline debris includes steel pipe, concrete, rebar, wood, Gilsulate bedding material, asphalt, wire, and asbestos. Figure 4 shows the 100-N-84:6 pipeline remediation where it intersects with the UPR-100-N-31 waste site. Additional photographs of the 100-N-84:6 remediation are provided in Figures 5 and 6. Post-remediation civil surveys were conducted following remedial action activities and are provided in Figures 7 and 8. There are no overburden soil stockpiles or waste staging pile areas associated with the 100-N-84:6 subsite.

Two empty, smashed, and rusted drums and a section of irrigation pipeline covered in friable asbestos insulation were encountered during the remediation. A photograph of one of the smashed drums and the asbestos insulated pipe are shown in Figures 9 and 10, respectively. These items were not considered anomalies and were disposed of at ERDF. No anomalous material or stained soil was observed during the remediation.

Several in-process soil samples were collected from the 100-N-84:6 pipeline subsite during and at the completion of site remediation. The data are provided in Appendix B.

Figure 2. 100-N-84:6 Pipeline Segments Not Included in Sample Design.

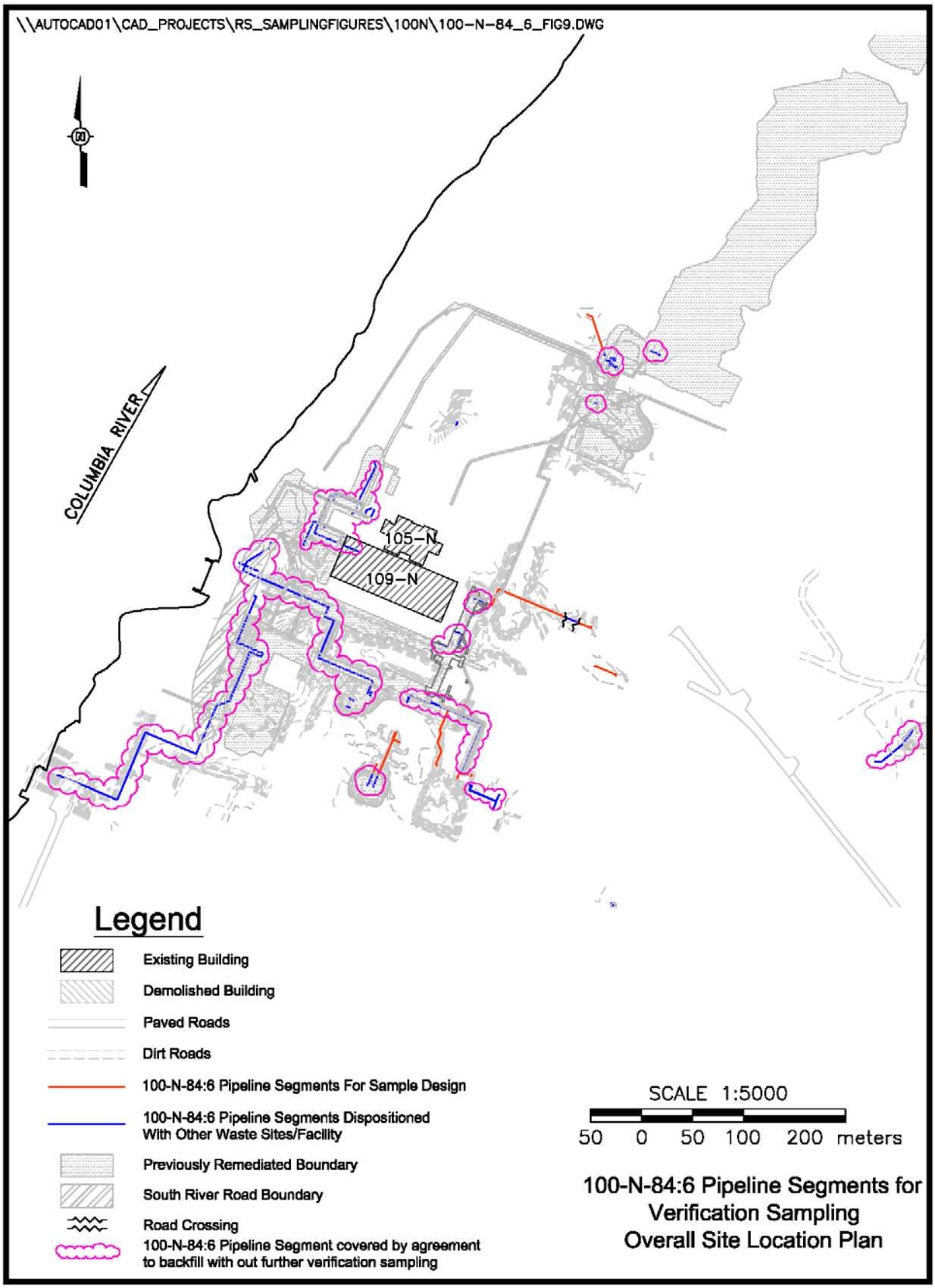

Figure 3. 100-N-84:8 Segment 16 Location.

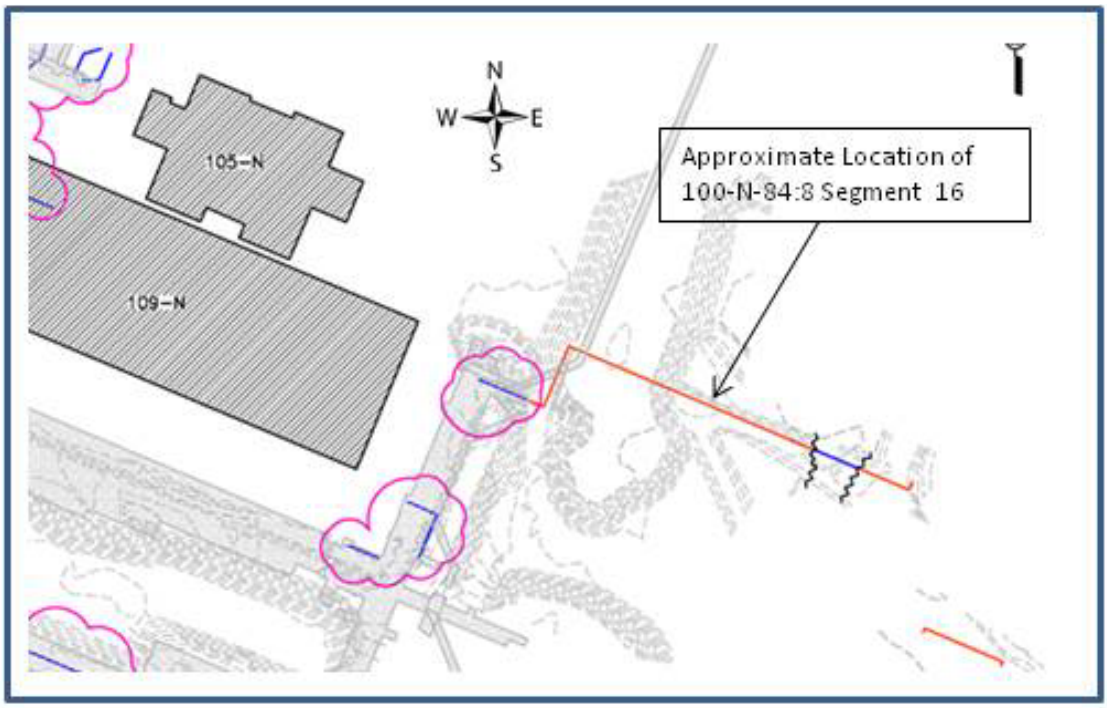

Figure 4. 100-N-84:6 Excavation (April 10, 2013).

Figure 5. 100-N-84:6 Excavation (April 23, 2013).

Figure 6. 100-N-84:6 Excavation South of 105-N Reactor (January 29, 2014).

Figure 7. 100-N Area Post-Excavation Civil Survey Including 100-N-84:6.

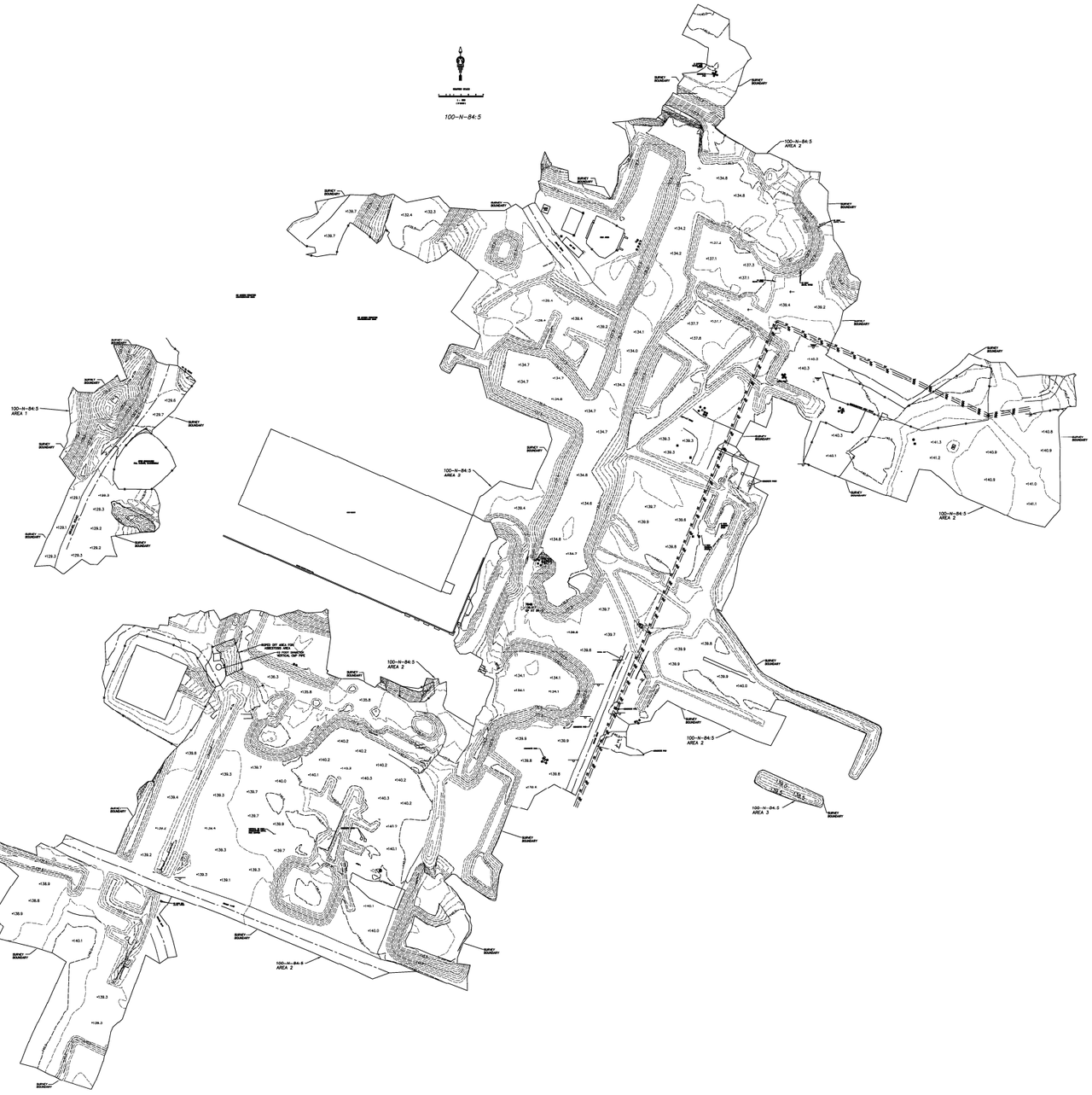

Figure 8. Additional 100-N Area Post-Excavation Civil Survey Including 100-N-84:6.

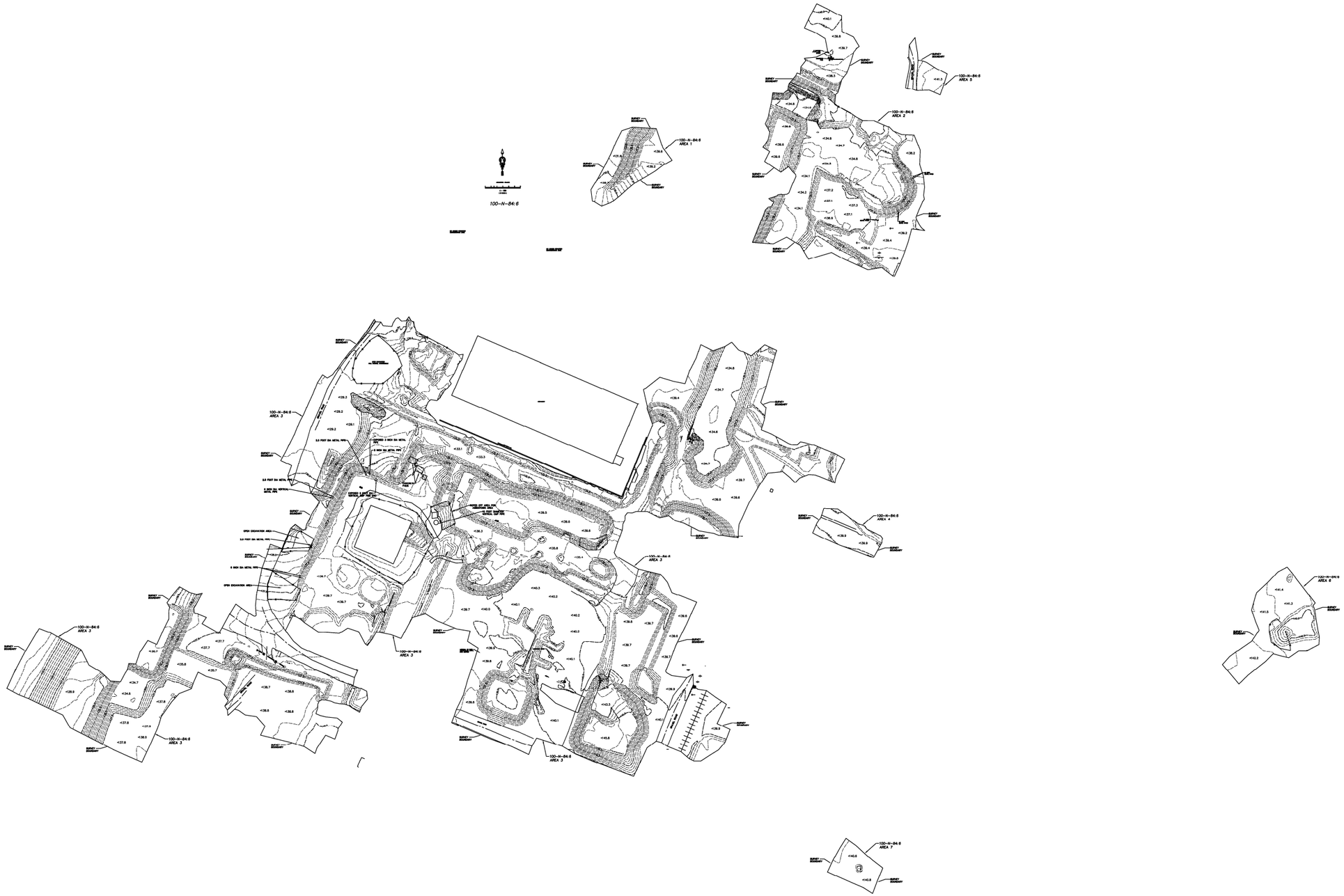

Figure 9. Crushed Drum from the 100-N-84:6 Excavation (January 10, 2014).

Figure 10. Asbestos Insulated Pipe from the 100-N-84:6 Excavation (March 3, 2014).

VERIFICATION SAMPLING ACTIVITIES

One verification soil sample (J1J4H9) and a duplicate (J1J4J0) were collected on June 13, 2011, to support the removal of the 100-N river structures. The samples were collected per the "100-N FR South River Road Agreement" with Ecology (WCH 2011b). The verification sample results are provided in Appendix C.

One verification soil sample (J1T9D9) was collected on February 6, 2014, at a road crossing area as described in the "Request to Verification Sample and Backfill Immediately Portions of 100-N-84 Pipeline Subsites that Cross Under Established Roadways" (WCH 2014e) agreement with Ecology. The sample was collected to allow the area to be backfilled ahead of the normal verification sampling/closeout process. This road crossing area was excluded from the verification sample design. The verification sample results are provided in Appendix C.

The remaining verification soil sampling was conducted on May 21, 2014, per the *Work Instruction for Verification Sampling of the 100-N-84:6, 100-N Area Chemical and Process Sewer Pipelines* (WCH 2014f). Sampling was conducted to support a determination that residual contaminant concentrations in the soil meet cleanup criteria specified in the 100-N Area RDR/RAWP (DOE-RL 2013) and 100-N Area ROD (EPA 1999).

The verification sample results are provided in Appendix C and indicate that the waste removal action achieved compliance with the remedial action objectives (RAOs) and remedial action goals (RAGs) for the 100-N-84:6 subsite. The following subsections provide additional discussion of the information used to develop the verification sampling design. The statistical results of verification sampling are also summarized to support interim closure of the site.

Contaminants of Potential Concern

The 100-N-84:6 COPCs were determined based on historical information and previous sampling results.

Historical information suggests that various chemicals were utilized in the 100-N-84:6 source buildings including the 109-N Heat Exchange Building, 105-N Reactor Building, 163-N Demineralization Plant, 182-N High-Lift Pump House, 183-N Filter Plant, and 184-N Power House. Phosphoric acid, ascorbic acid, citric acid, and potassium permanganate were used in the 109-N and 105-N Buildings in the decontamination processes. Ammonium hydroxide, morpholine, and sodium hydroxide were used to control the pH of the cooling water. Hydrazine was used to reduce oxygen concentrations in cooling water. Sulfuric acid was used to regenerate the cation resin, and sodium hydroxide was used to regenerate anion resin in the demineralizer plant. Sodium sulfite was used as a deoxygenizing chemical for low-pressure filter water in the 182-N Building. Sodium dichromate was added to the filtered and raw water supply for cooling coils in the 105-N Building.

Semivolatile organic compounds (SVOCs) were included as COPCs for the 116-N-2 and 100-N-88 waste sites, which are associated with two segments of the 100-N-84:6 subsite. An approximate 3.5-m (11.5-ft) segment of the 100-N-84:6 pipeline entered the northwest side of the 116-N-2 waste site. Multiple SVOCs were detected above groundwater and/or river

protection RAGs for the 116-N-2 verification sampling; however, the segment of 100-N-84:6 pipeline associated with 116-N-2 was located within the sample design boundary and was dispositioned with the 116-N-2 waste site (WCH 2013h). An approximate 3.8-m (12.5-ft) segment of the 100-N-84:6 pipeline entered the north side of the 100-N-88 waste site. The characterization sampling results for the 100-N-88 waste site had no detected SVOCs. The verification sampling for the 100-N-88 waste site detected only butylbenzylphthalate, which is a common laboratory contaminant, at a concentration much lower than the most stringent RAGs. In addition, the potential organic contaminants such as hydrazine and morpholine are reagents that would have decomposed and are unlikely to be found. Therefore, SVOCs were excluded from the COPCs for the 100-N-84:6 subsite.

The 100-N-84:6 subsite included several pipeline segments categorized as radioactive drains. With the exception of two radioactive drain segments within the footprint of the former 1722-N facility, the radioactive drain piping has been remediated and interim closed out with the 100-N-61:2 subsite (WCH 2013f), the 100-N-63:2 subsite (WCH 2013c), and the waste sites located west of the 105-N/109-N Reactor (WCH 2013g). The two segments within the footprint of the former 1722-N facility were removed during removal of the 105-NA Building and the 1722-N Building (WCH 2013b) and will be dispositioned with the 100-N-66 waste site. Since there was no radioactive drain piping left for remediation, radionuclides were excluded from the COPCs for the 100-N-84:6 subsite.

A focused sample was collected and analyzed for inductively coupled plasma (ICP) metals, mercury, ion chromatograph (IC) anions, hexavalent chromium, polycyclic aromatic hydrocarbons (PAH), polychlorinated biphenyls (PCBs), and asbestos to evaluate the location underneath where a 100-N-84:6 pipeline segment remained in the sidewall of the 100-N-23 excavation (WCH 2013e). Of these potential contaminants, multiple PAH and aroclor-1254 were detected above groundwater and/or river protection RAGs. Although PAH concentrations were detected above a RAG, asphaltic material related to former construction (roadways, parking lots, mastic, and Gilsulate applications around subsurface pipelines) intersects or coincides with the pipeline remediation. In these instances, PAH concentrations associated with materials used for structural or construction purposes are likely to be present above a soil RAG (WCH 2014a). Therefore, PAH concentrations were excluded as site COPCs unless oily stained soil was observed during the verification sampling (WCH 2014f). In the event soil staining was observed, PAH and total petroleum hydrocarbons (TPH) would have been added to the list of analyses for the verification samples within the stained area. No soil staining was observed during the verification sampling; therefore, PAH and TPH were not included as COPCs. Polychlorinated biphenyls were retained as COPCs for the 100-N-84:6 subsite.

The final list of analyses for verification sampling the 100-N-84:6 subsite included ICP metals, mercury, hexavalent chromium, IC anions, and PCBs.

The analytical methods that were performed to evaluate the site COPCs are provided in Table 1.

Table 1. 100-N-84:6 Subsite Laboratory Analytical Methods.

Analytical Method	Contaminants of Potential Concern
ICP metals [a] – EPA Method 6010	Metals
Mercury – EPA Method 7471	Mercury
Hexavalent chromium – EPA Method 7196	Hexavalent chromium
IC anions	Chloride, sulfate
PCBs – EPA Method 8082	Polychlorinated biphenyls

[a] The expanded list of ICP metals was performed to include antimony, arsenic, barium, beryllium, boron, cadmium, chromium (total), cobalt, copper, lead, manganese, molybdenum, nickel, selenium, silver, vanadium, and zinc.

EPA = U.S. Environmental Protection Agency
IC = ion chromatography
ICP = inductively coupled plasma
PCB = polychlorinated biphenyl

Verification Sample Design

A statistical and focused sampling design was used to evaluate the 100-N-84:6 pipeline subsite. One decision unit was identified for the 100-N-84:6 subsite excavation. Twelve statistical verification soil samples, plus one duplicate and one split sample, were collected from the excavation sample area on May 21, 2014. The sample area was restricted to a narrow segment of the excavation floor directly below and approximately 1 m (3.3 ft) on either side of the pipeline location. Additionally, one focused verification soil sample was collected from the former location of french drain 1. The french drain was formerly part of the 100-N-103:1 waste site; however, it was added to the 100-N-84:6 subsite because it was within the planned layback of the pipeline excavation.

Two additional focused verification soil samples were collected under previous agreements with Ecology. One focused verification soil sample plus one duplicate sample were collected on June 13, 2011, per the “100-N FR South River Road Agreement” (WCH 2011b), and one focused verification soil sample was collected on February 6, 2014, at a road crossing per the “Request to Verification Sample and Backfill Immediately Portions of 100-N-84 Pipeline Subsites that Cross Under Established Roadways” agreement (WCH 2014e).

All sampling was performed in accordance with ENV-1, *Environmental Monitoring & Management*, to fulfill the requirements of the *100-N Area Sampling and Analysis Plan for CERCLA Waste Sites* (DOE-RL 2006). All samples were grab samples collected at predetermined coordinates.

Additional information related to verification sampling can be found in the field sampling logbooks (WCH 2011a, 2014b, 2014c). The verification sample summary is provided in Table 2, and the sample locations are shown in Figure 11.

Table 2. 100-N-84:6 Subsite Verification Sample Summary.

Sample Location	HEIS Sample Number	Washington State Plane		Sample Analysis [a]
		Northing (m)	Easting (m)	
100-N-84:6 River Road Agreement Focused Verification Samples				
RR-1	J1J4H9	571035.4	149482.8	ICP metals [a], mercury, hexavalent chromium, IC anions [b], pesticides, PCBs, SVOCs, GEA, strontium-90
	J1J4K2			Asbestos
Duplicate of RR-1	J1J4J0	571035.4	149482.8	ICP metals [a], mercury, hexavalent chromium, IC anions [b], pesticides, PCBs, SVOCs, GEA, strontium-90
	J1J4K3			Asbestos
100-N-84:6 Road Crossing Focused Verification Sample				
N-84-6a	J1T9D9	149427.5	571355.8	ICP metals [a], mercury, hexavalent chromium, IC anions [b],
100-N-84:6 Excavation Verification Samples				
EXC-1	J1TR30	149289.5	571162.9	ICP metals [a], mercury, hexavalent chromium, IC anions [b], PCBs
EXC-2	J1TR31	149304.3	571177.1	
EXC-3	J1TR32	149277.7	571242.8	
EXC-4	J1TR33	149313.5	571224.5	
EXC-5	J1TR34	149340.2	571232.6	
EXC-6	J1TR35	149446.3	571278.2	
EXC-7	J1TR36	149378.4	571395.6	
EXC-8	J1TR37	149448.5	571311.9	
EXC-9	J1TR38	149435.2	571344.8	
EXC-10	J1TR39	149696.6	571384.9	
EXC-11	J1TR40	149716.3	571379.2	
EXC-12	J1TR41	149728.2	571373.1	
Duplicate of EXC-1	J1TR42	149289.5	571162.9	
Split of EXC-1	J1TR45	149289.5	571162.9	
FS-1 [c]	J1TR44	149279.1	571253.1	
Equipment blank	J1TR43	NA	NA	ICP metals [a], mercury

[a] Analysis for the expanded list of ICP metals was performed to include antimony, arsenic, barium, beryllium, boron, cadmium, chromium (total), cobalt, copper, lead, manganese, molybdenum, nickel, selenium, silver, vanadium, and zinc.
[b] The expanded list of IC anions was performed to include bromide, fluoride, nitrate, nitrite, and phosphate.
[c] Focused sample FS-1 was collected from the former french drain 1 location.

GEA = gamma energy analysis
HEIS = Hanford Environmental Information System
IC = ion chromatography
ICP = inductively coupled plasma
NA = not applicable
PCB = polychlorinated biphenyl
SVOC = semivolatile organic compound

Figure 11. 100-N-84:6 Subsite Verification Sample Locations.

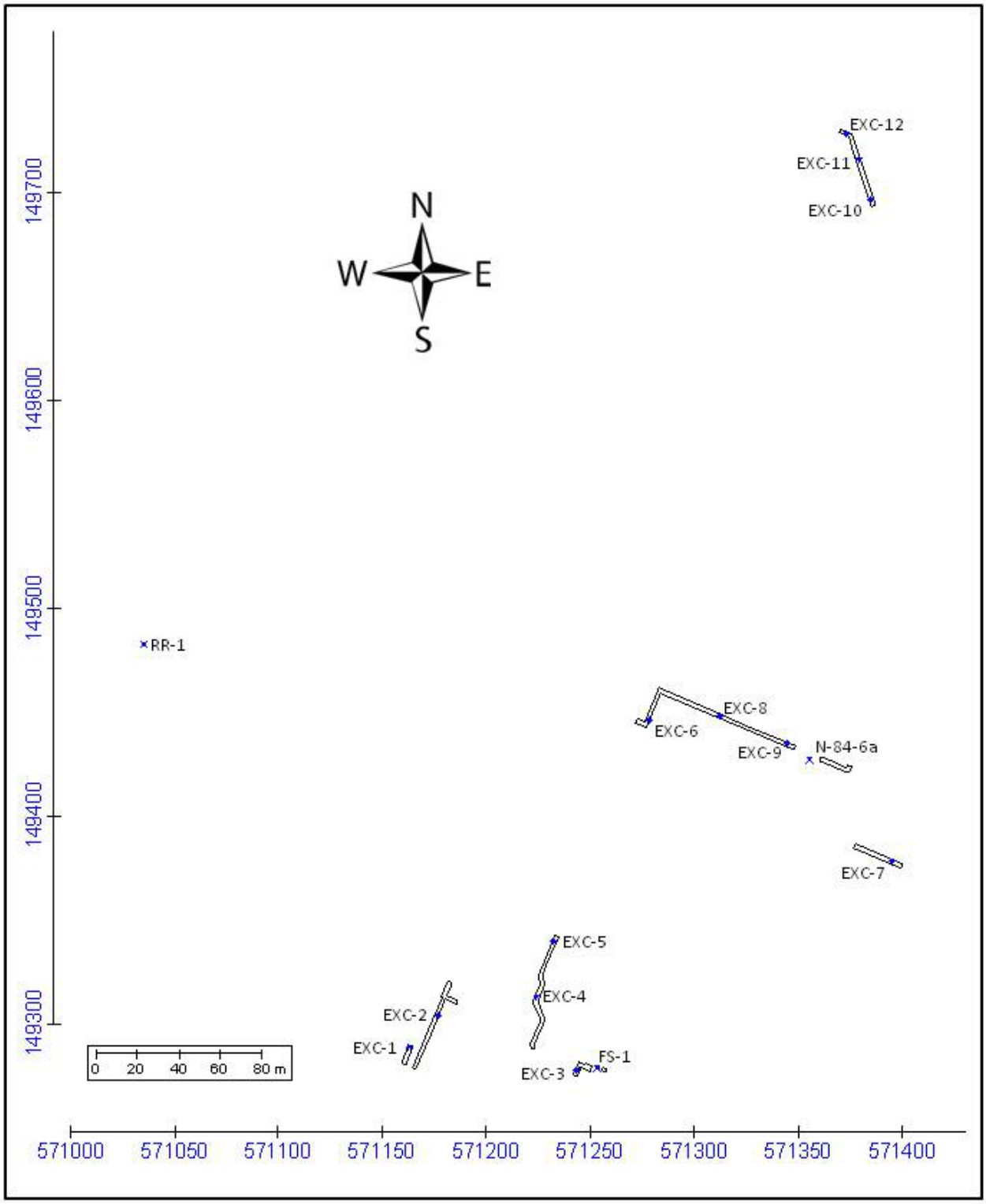

Verification Sample Results

All verification samples were collected for full protocol laboratory analysis and analyzed using EPA-approved analytical methods (Table 1). Evaluation of the verification data from the 100-N-84:6 subsite was performed by direct comparison of the statistical or maximum sample results for each COPC against the cleanup criteria.

The primary statistical calculation to evaluate compliance with cleanup standards is the 95% upper confidence limit (UCL) on the arithmetic mean of the data. The 95% UCL values for each detected COPC are computed for the 100-N-84:6 subsite decision units as specified by the 100-N Area RDR/RAWP (DOE-RL 2013). The calculations are provided in Appendix C. When a nonradionuclide COPC was detected in fewer than 50% of the verification samples collected from the decision unit, the maximum detected value was used for comparison to the RAGs. If no detections for a given COPC were reported in the data set, then no statistical calculation or evaluation was performed for that COPC.

Comparisons of the results for each COPC from the 100-N-84:6 subsite against the RAGs are summarized in Tables 3 through 6. Contaminants that were not detected by laboratory analysis are excluded from these tables. Calculated cleanup levels are not presented in the Cleanup Levels and Risk Calculations Database (Ecology 2014) under WAC 173-340-740(3) for calcium, magnesium, potassium, silicon, and sodium. The EPA's *Risk Assessment Guidance for Superfund, Volume I: Human Health Evaluation Manual* (EPA 1989) recommends that aluminum and iron not be considered in site risk evaluations. Therefore, aluminum, calcium, iron, magnesium, potassium, silicon, and sodium are not considered site COPCs and are also not included in the tables. Radium-226 was detected in samples collected per the river road agreement, but is not included in Table 5, as this isotope is unrelated to the operational history of the site and was detected below background levels. The radium detected in environmental samples is associated with background quantities of uranium naturally present in soil and will only occur on the Hanford Site in secular equilibrium with naturally occurring uranium.

The complete laboratory results for all constituents are stored in a Washington Closure Hanford (WCH) project-specific database prior to archival in the Hanford Environmental Information System (HEIS) and are presented in Attachment 1 of the 95% UCL calculations (Appendix C).

DATA EVALUATION

This section demonstrates that contaminant concentrations at the 100-N-84:6 subsite achieve the applicable RAGs developed to support unrestricted land use at the 100 Area as established in the 100-N Area ROD (EPA 1999) and documented in the 100-N Area RDR/RAWP (DOE-RL 2013).

Table 3. Comparison of Contaminant Concentrations to Action Levels for the 100-N-84:6 Excavation Verification Samples.

COPC	Statistical or Maximum Result [b] (mg/kg)	Remedial Action Goals (mg/kg) [a]			Does the Result Exceed RAGs?	Does the Result Pass RESRAD Modeling?
		Direct Exposure	Soil Cleanup Level for Groundwater Protection	Soil Cleanup Level for River Protection		
Arsenic	3.2 (<BG)	20 [c]	20 [c]	20 [c]	No	--
Barium	70.4 (<BG)	16,000 [d]	200	400	No	--
Beryllium	0.12 (<BG)	10.4 [e]	1.51 [c]	1.51 [c]	No	--
Boron [f]	1.1	16,000 [d]	320	-- [g]	No	--
Cadmium [h]	0.12 (<BG)	13.9 [e]	0.81 [c]	0.81 [c]	No	--
Chromium (total)	20.8	120,000 [d]	18.5 [c]	18.5 [c]	Yes	Yes [i]
Cobalt	9.9 (<BG)	1,600 [d]	32	-- [g]	No	--
Copper	58.0	2,960 [d]	59.2	22.0 [c]	Yes	Yes [i]
Hexavalent chromium [f]	0.222	2.1 [e]	4.8	2	No	--
Lead	8.4 (<BG)	353	10.2 [c]	10.2 [c]	No	--
Manganese	339 (<BG)	11,200 [d]	512 [c]	-- [g]	No	--
Mercury	0.021 (<BG)	24 [d]	0.33 [c]	0.33 [c]	No	--
Molybdenum [f]	0.43	400 [d]	8	-- [g]	No	--
Nickel	11.4 (<BG)	1,600 [d]	19.1 [c]	27.4	No	--
Vanadium	60.5 (<BG)	560 [d]	85.1 [c]	-- [g]	No	--
Zinc	70.4	24,000 [d]	480	67.8 [c]	Yes	Yes [i]
Nitrogen in nitrate [j]	21.9	128,000 [d]	1,000	2,000	No	--
Nitrogen in nitrite [f, j]	0.77	8,000 [d]	100	200	No	--
Sulfate	72.6 (<BG)	--	25,000	-- [g]	No	--
Aroclor-1254	0.063	0.5 [k]	0.017 [l]	0.017 [l]	Yes	Yes [i]
Aroclor-1260	0.12	0.5 [k]	0.017 [l]	0.017 [l]	Yes	Yes [i]
Total PCB	0.183	0.5 [k]	0.017 [l]	0.017 [l]	Yes	Yes [i]

[a] RAGs obtained from the 100-N Area RDR/RAWP (DOE-RL 2013) or the 100 Area RDR/RAWP (DOE-RL 2009) where indicated.
[b] Maximum or 95% upper confidence limit, depending on data censorship, as described in the *100-N-84:6 Subsite Cleanup Verification 95% UCL Calculations* (Appendix C).
[c] Where cleanup levels are less than background, cleanup levels default to background per WAC 173-340-700(4)(d) (Ecology 1996). The arsenic cleanup level of 20 mg/kg has been agreed to by the Tri-Party Agreement project managers as discussed in Section 2.1.2.1 of the 100-N Area RDR/RAWP (DOE-RL 2013).
[d] Noncarcinogenic cleanup level calculated from WAC 173-340-740(3), Method B (Ecology 1996).
[e] Carcinogenic cleanup level calculated based on the inhalation exposure pathway (WAC 173-340-750[3], Ecology 1996).
[f] No Hanford Site-specific or Washington State background value available.
[g] No parameters (bioconcentration factors or ambient water quality criteria values) are available from the Washington State Department of Ecology Cleanup Levels and Risk Calculations database or other databases to calculate cleanup levels (WAC 173-340-730[3][a][iii], 1996 [Method B for surface waters]).
[h] Hanford Site-specific background value is not available. Value used is from *Natural Background Soil Metals Concentrations in Washington State* (Ecology 1994).
[i] Based on RESRAD modeling discussed in Appendix C of the 100-N Area RDR/RAWP (DOE-RL 2013), the residual concentrations of chromium (total), copper, zinc, and total PCBs (aroclor-1254 and aroclor-1260) are not predicted to migrate more than 2.6 m (8.5 ft) vertically within 1,000 years (based on the contaminant with the lowest soil-partitioning coefficient [22 mL/g for copper]). The vadose zone beneath the 100-N-84:6 subsite is approximately 8 m (26.2 ft) thick. Therefore, the residual concentrations of chromium (total), copper, zinc, and total PCBs (aroclor-1254 and aroclor-1260) are predicted to be protective of groundwater and the Columbia River.
[j] Remedial action goals obtained from the 100 Area RDR/RAWP (DOE-RL 2009).
[k] Carcinogenic cleanup level calculated from WAC 173-340-740, Method B (Ecology 1996).
[l] Where cleanup levels are less than RDLs, cleanup levels default to RDLs per WAC 173-340-707(2) (Ecology 1996).

-- = not applicable
BG = background
COPC = contaminant of potential concern
PCB = polychlorinated biphenyl
RAG = remedial action goal
RDL = required detection limit
RDR/RAWP = Remedial Design Report/Remedial Action Work Plan
RESRAD = RESidual RADioactivity (dose model)
WAC = *Washington Administrative Code*

Table 4. Comparison of Contaminant Concentrations to Action Levels for the 100-N-84:6 Focused Verification Samples.

COPC	Maximum Result [b] (mg/kg)	Remedial Action Goals (mg/kg) [a]			Does the Result Exceed RAGs?	Does the Result Pass RESRAD Modeling?
		Direct Exposure	Soil Cleanup Level for Groundwater Protection	Soil Cleanup Level for River Protection		
Arsenic	1.2 (<BG)	20 [c]	20 [c]	20 [c]	No	--
Barium	194	16,000 [d]	200	400	No	--
Cadmium [e]	0.066 (<BG)	13.9 [f]	0.81 [c]	0.81 [c]	No	--
Chromium (total)	4.9 (<BG)	120,000 [d]	18.5 [c]	18.5 [c]	No	--
Cobalt	15.3 (<BG)	1,600 [d]	32	-- [g]	No	--
Copper	24.6	2,960 [d]	59.2	22.0 [c]	Yes	Yes [h]
Hexavalent chromium [i]	0.323	2.1 [f]	4.8	2	No	--
Lead	9.7 (<BG)	353	10.2 [c]	10.2 [c]	No	--
Manganese	579	11,200 [d]	512 [c]	-- [g]	Yes	Yes [h]
Mercury	0.018 (<BG)	24 [d]	0.33 [c]	0.33 [c]	No	--
Molybdenum [i]	0.32	400 [d]	8	-- [g]	No	--
Nickel	8.4 (<BG)	1,600 [d]	19.1 [c]	27.4	No	--
Vanadium	104	560 [d]	85.1 [c]	-- [g]	Yes	Yes [h]
Zinc	64.3 (<BG)	24,000 [d]	480	67.8 [c]	No	--
Chloride [j]	4.9 (<BG)	--	25,000	-- [g]	No	--
Nitrogen in nitrate [j]	1.7 (<BG)	128,000 [d]	1,000	2,000	No	--
Sulfate	138 (<BG)	--	25,000	-- [g]	No	--

[a] RAGs obtained from the 100-N Area RDR/RAWP (DOE-RL 2013) or the 100 Area RDR/RAWP (DOE-RL 2009) where indicated.
[b] Maximum as described in the *100-N-84:6 Subsite Cleanup Verification 95% UCL Calculations* (Appendix C).
[c] Where cleanup levels are less than background, cleanup levels default to background per WAC 173-340-700(4)(d) (Ecology 1996). The arsenic cleanup level of 20 mg/kg has been agreed to by the Tri-Party Agreement project managers as discussed in Section 2.1.2.1 of the 100-N Area RDR/RAWP (DOE-RL 2013).
[d] Noncarcinogenic cleanup level calculated from WAC 173-340-740(3), Method B, Ecology 1996.
[e] Hanford Site-specific background value is not available. Value used is from *Natural Background Soil Metals Concentrations in Washington State* (Ecology 1994).
[f] Carcinogenic cleanup level calculated based on the inhalation exposure pathway (WAC 173-340-750[3], Ecology 1996).
[g] No parameters (bioconcentration factors or ambient water quality criteria values) are available from the Washington State Department of Ecology Cleanup Levels and Risk Calculations database or other databases to calculate cleanup levels (WAC 173-340-730[3][a][iii], 1996 [Method B for surface waters]).
[h] Based on RESRAD modeling discussed in Appendix C of the 100-N Area RDR/RAWP (DOE-RL 2013), the residual concentrations of copper, manganese, and vanadium are not predicted to migrate more than 2.6 m (8.5 ft) vertically within 1,000 years (based on the contaminant with the lowest soil-partitioning coefficient [22 mL/g for copper]). The vadose zone beneath the 100-N-84:6 subsite is approximately 8 m (26.2 ft) thick. Therefore, the residual concentrations of copper, manganese, and vanadium are predicted to be protective of groundwater and the Columbia River.
[i] No Hanford Site-specific or Washington State background value available.
[j] Remedial action goals obtained from the 100 Area RDR/RAWP (DOE-RL 2009).

-- = not applicable
BG = background
COPC = contaminant of potential concern
RAG = remedial action goal
RDR/RAWP = Remedial Design Report/Remedial Action Work Plan
RESRAD = RESidual RADioactivity (dose model)
WAC = *Washington Administrative Code*

Table 5. Comparison of Contaminant Concentrations to Action Levels for the 100-N-84:6 River Road Focused Verification Samples.

COPC	Maximum Result [b] (mg/kg)	Remedial Action Goals (mg/kg) [a]			Does the Result Exceed RAGs?	Does the Result Pass RESRAD Modeling?
		Direct Exposure	Soil Cleanup Level for Groundwater Protection	Soil Cleanup Level for River Protection		
Arsenic	1.5 (<BG)	20 [c]	20 [c]	20 [c]	No	--
Barium	50.3 (<BG)	16,000 [d]	200	400	No	--
Cadmium [e]	0.050 (<BG)	13.9 [f]	0.81 [c]	0.81 [c]	No	--
Chromium (total)	5.2 (<BG)	120,000 [d]	18.5 [c]	18.5 [c]	No	--
Cobalt	11.0 (<BG)	1,600 [d]	32	-- [g]	No	--
Copper	17.7 (<BG)	2,960 [d]	59.2	22.0 [c]	No	--
Lead	3.7 (<BG)	353	10.2 [c]	10.2 [c]	No	--
Manganese	332 (<BG)	11,200 [d]	512 [c]	-- [g]	No	--
Molybdenum [h]	0.59	400 [d]	8	-- [g]	No	--
Nickel	8.1 (<BG)	1,600 [d]	19.1 [c]	27.4	No	--
Vanadium	66.8 (<BG)	560 [d]	85.1 [c]	-- [g]	No	--
Zinc	44.6 (<BG)	24,000 [d]	480	67.8 [c]	No	--
Chloride [i]	7.6 (<BG)	--	25,000	-- [g]	No	--
Nitrogen in nitrate [i]	1.5 (<BG)	128,000 [d]	1,000	2,000	No	--
Nitrogen in nitrate and nitrite [i]	1.1 (<BG)	128,000 [d]	1,000	2,000	No	--
Sulfate	5.2 (<BG)	--	25,000	-- [g]	No	--
Aroclor-1254	0.023	0.5 [j]	0.017 [k]	0.017 [k]	Yes	Yes [l]
Aroclor-1260	0.0087	0.5 [j]	0.017 [k]	0.017 [k]	No	--
Total PCBs	0.0317	0.5 [j]	0.017 [k]	0.017 [k]	Yes	Yes [l]
Benzo(a)anthracene [i]	0.027	1.37 [j]	0.015 [k]	0.015 [k]	Yes	Yes [l]
Benzo(b)fluoranthene [i]	0.033	1.37 [j]	0.015 [k]	0.015 [k]	Yes	Yes [l]
Chrysene [i]	0.027	137 [j]	1.2	0.10 [k]	No	--
Phenanthrene [m]	0.017	24,000 [d]	240	1,920	No	--
Pyrene	0.034	2,400 [d]	48	192	No	--

[a] RAGs obtained from the 100-N Area RDR/RAWP (DOE-RL 2013) or the 100 Area RDR/RAWP (DOE-RL 2009) where indicated.
[b] Maximum as described in the *100-N-84:6 Subsite Cleanup Verification 95% UCL Calculations* (Appendix C).
[c] Where cleanup levels are less than background, cleanup levels default to background per WAC 173-340-700(4)(d) (Ecology 1996). The arsenic cleanup level of 20 mg/kg has been agreed to by the Tri-Party Agreement project managers as discussed in Section 2.1.2.1 of the 100-N Area RDR/RAWP (DOE-RL 2013).
[d] Noncarcinogenic cleanup level calculated from WAC 173-340-740(3), Method B (Ecology 1996).
[e] Hanford Site-specific background value is not available. Value used is from *Natural Background Soil Metals Concentrations in Washington State* (Ecology 1994).
[f] Carcinogenic cleanup level calculated based on the inhalation exposure pathway (WAC 173-340-750[3], Ecology 1996).
[g] No parameters (bioconcentration factors or ambient water quality criteria values) are available from the Washington State Department of Ecology Cleanup Levels and Risk Calculations database or other databases to calculate cleanup levels (WAC 173-340-730[3][a][iii], 1996 [Method B for surface waters]).
[h] No Hanford Site-specific or Washington State background value available.
[i] Remedial action goals obtained from the 100 Area RDR/RAWP (DOE-RL 2009).
[j] Carcinogenic cleanup level calculated from WAC 173-340-740, Method B (Ecology 1996).
[k] Where cleanup levels are less than RDLs, cleanup levels default to RDLs per WAC 173-340-707(2) (Ecology 1996).
[l] Based on RESRAD modeling discussed in Appendix C of the 100-N Area RDR/RAWP (DOE-RL 2013), the residual concentrations of total PCBs (aroclor-1254 and aroclor-1260), benzo(a)anthracene, and benzo(b)fluoranthene are predicted to migrate less than 1 m (3.3 ft) vertically within 1,000 years (based on the contaminant with the lowest soil-partitioning coefficient [75.6 mL/g for aroclor-1254]). The vadose zone beneath the 100-N-84:6 subsite is approximately 8 m (26.2 ft) thick. Therefore, the residual concentrations of total PCBs (aroclor-1254), benzo(a)anthracene, and benzo(b)fluoranthene are predicted to be protective of groundwater and the Columbia River.
[m] Toxicity data for phenanthrene are not available. Cleanup levels are based on the surrogate chemical anthracene.

-- = not applicable
BG = background
COPC = contaminant of potential concern
PCB = polychlorinated biphenyl
RAG = remedial action goal
RDL = required detection limit
RDR/RAWP = Remedial Design Report/Remedial Action Work Plan
RESRAD = RESidual RADioactivity (dose model)
WAC = *Washington Administrative Code*

Table 6. Comparison of Contaminant Concentrations to Action Levels for the 100-N-84:6 Road Crossing Focused Verification Samples.

COPC	Maximum Result [b] (mg/kg)	Remedial Action Goals (mg/kg) [a]			Does the Result Exceed RAGs?	Does the Result Pass RESRAD Modeling?
		Direct Exposure	Soil Cleanup Level for Groundwater Protection	Soil Cleanup Level for River Protection		
Arsenic	3.1 (<BG)	20 [c]	20 [c]	20 [c]	No	--
Barium	45.8 (<BG)	16,000 [d]	200	400	No	--
Boron [e]	1.0	16,000 [d]	320	-- [f]	No	--
Cadmium [g]	0.099 (<BG)	13.9 [h]	0.81 [c]	0.81 [c]	No	--
Chromium (total)	7.3 (<BG)	120,000 [d]	18.5 [c]	18.5 [c]	No	--
Cobalt	8.1 (<BG)	1,600 [d]	32	-- [f]	No	--
Copper	15.4 (<BG)	2,960 [d]	59.2	22.0 [c]	No	--
Hexavalent chromium [e]	0.169	2.1 [h]	4.8	2	No	--
Lead	5.2 (<BG)	353	10.2 [c]	10.2 [c]	No	--
Manganese	309 (<BG)	11,200 [d]	512 [c]	-- [f]	No	--
Mercury	0.018 (<BG)	24 [d]	0.33 [c]	0.33 [c]	No	--
Nickel	12.7 (<BG)	1,600 [d]	19.1 [c]	27.4	No	--
Vanadium	50.6 (<BG)	560 [d]	85.1 [c]	-- [f]	No	--
Zinc	42.1 (<BG)	24,000 [d]	480	67.8 [c]	No	--
Chloride [i]	120	--	25,000	-- [f]	No	--
Fluoride [i]	1.4 (<BG)	4,800 [d]	96	400	No	--
Nitrogen in nitrate [i]	10.5 (<BG)	128,000 [d]	1,000	2,000	No	--
Nitrogen in nitrate and nitrite [i]	13.4	128,000 [d]	1,000	2,000	No	--
Sulfate	18.8 (<BG)	--	25,000	-- [f]	No	--

[a] RAGs obtained from the 100-N Area RDR/RAWP (DOE-RL 2013), or the 100 Area RDR/RAWP (DOE-RL 2009) where indicated.
[b] Maximum as described in the *100-N-84:6 Subsite Cleanup Verification 95% UCL Calculations* (Appendix C).
[c] Where cleanup levels are less than background, cleanup levels default to background per WAC 173-340-700(4)(d) (Ecology 1996). The arsenic cleanup level of 20 mg/kg has been agreed to by the Tri-Party Agreement project managers as discussed in Section 2.1.2.1 of the 100-N Area RDR/RAWP (DOE-RL 2013).
[d] Noncarcinogenic cleanup level calculated from WAC 173-340-740(3), Method B (Ecology 1996).
[e] No Hanford Site-specific or Washington State background value available.
[f] No parameters (bioconcentration factors or ambient water quality criteria values) are available from the Washington State Department of Ecology Cleanup Levels and Risk Calculations database or other databases to calculate cleanup levels (WAC 173-340-730[3][a][iii], 1996 [Method B for surface waters]).
[g] Hanford Site-specific background value is not available. Value used is from *Natural Background Soil Metals Concentrations in Washington State* (Ecology 1994).
[h] Carcinogenic cleanup level calculated based on the inhalation exposure pathway (WAC 173-340-750[3], Ecology 1996).
[i] Remedial action goals obtained from the 100 Area RDR/RAWP (DOE-RL 2009).

-- = not applicable
BG = background
COPC = contaminant of potential concern
RAG = remedial action goal
RDR/RAWP = Remedial Design Report/Remedial Action Work Plan
RESRAD = RESidual RADioactivity (dose model)
WAC = *Washington Administrative Code*

Attainment of Nonradionuclide RAGs

Tables 3 through 6 compare the cleanup verification sample values for the 100-N-84:6 subsite excavations to the applicable soil RAGs for direct exposure, protection of groundwater, and protection of the Columbia River. All COPCs were quantified below direct exposure RAGs. All COPCs were quantified below groundwater and/or river protection soil RAGs with the exception of chromium (total), copper, manganese, vanadium, zinc, total PCBs (aroclor-1254 and aroclor-1260) benzo(a)anthracene, and benzo(b)fluoranthene. However, given the lowest soil-partitioning coefficient (K_d) of these contaminants (copper) of 22 mL/g, none would be expected to migrate more than 2.6 m (8.5 ft) vertically in 1,000 years based on RESidual RADioactivity (RESRAD) modeling discussed in Appendix C of the 100-N Area RDR/RAWP (DOE-RL 2013). The vadose zone beneath the 100-N-84:6 subsite is approximately 8 m (26.2 ft) thick. Therefore, residual concentrations of all contaminants are predicted to be protective of groundwater (and thus the Columbia River).

Three-Part Test for Nonradionuclides

A RAG requirement for nonradionuclides is the WAC 173-340-740(7)(e) three-part test, which consists of the following criteria: (1) the cleanup verification 95% UCL value must be less than the cleanup level, (2) no single detection shall exceed two times the cleanup criteria, and (3) the percentage of samples exceeding the cleanup criteria must be less than 10% of the data set.

The application of the three-part test for the 100-N-84:6 subsite is included in the *100-N-84:6 Subsite Cleanup Verification 95% UCL Calculations* in Appendix C of this remaining sites verification package, where half or more of the data set was detected. The results of this evaluation indicate that residual COPC concentrations pass the three-part test in comparison against applicable RAGs with the exception of chromium (total), copper, lead, and zinc, which fail one part of the three-part test to be protective of groundwater and the Columbia River. However, based on RESRAD modeling discussed in Appendix C of the 100-N Area RDR/RAWP (DOE-RL 2013), the residual concentrations of these contaminants are predicted to migrate less than 2.6 m (8.5 ft) vertically within 1,000 years (based on the lowest soil-partitioning coefficient of these contaminants [copper] of 22 mL/g). The vadose zone beneath the 100-N-84:6 subsite is approximately 8 m (26.2 ft) thick. Therefore, the residual concentrations of lead are predicted to be protective of groundwater and the Columbia River.

An additional application of the three-part test is included for the statistical data sets that default to the maximum because less than half of the data set was detected. The results of this evaluation indicate that residual COPC concentrations pass the three-part test in comparison against applicable RAGs with the exception of aroclor-1254 and aroclor-1260 (total PCBs), which fail one part of the three-part test to be protective of groundwater and the Columbia River. However, based on RESRAD modeling discussed in Appendix C of the 100-N Area RDR/RAWP (DOE-RL 2013), the residual concentrations of these contaminants are predicted to migrate less than 1.0 m (3.3 ft) vertically within 1,000 years (based on the lowest soil-partitioning coefficient of these contaminants [aroclor-1254] of 75.6 mL/g). As stated above, the vadose zone beneath the 100-N-84:6 subsite is approximately 8 m (26.2 ft) thick. Therefore, the residual concentrations of aroclor-1254 and aroclor-1260 are predicted to be protective of groundwater and the Columbia River.

Nonradionuclide Direct Contact Hazard Quotient and Carcinogenic Risk RAGs Attained

Nonradionuclide risk requirements include an individual hazard quotient of less than 1.0, a cumulative hazard quotient of less than 1.0, an individual contaminant carcinogenic risk of less than 1×10^{-6}, and a cumulative carcinogenic risk of less than 1×10^{-5}. For the 100-N-84:6 subsite, these risk values were not calculated for constituents that were either not detected or were detected at concentrations below Hanford Site or Washington State background. All individual hazard quotients for noncarcinogenic constituents were less than 1.0. The cumulative hazard quotient for those noncarcinogenic constituents above background or detected levels is 3.1×10^{-1}, which is less than 1.0. The individual carcinogenic risk values for the carcinogenic constituents detected above background are less than 1×10^{-6}, and the cumulative carcinogenic risk value is 5.6×10^{-7}, which is less than 1×10^{-5}. The 100-N-84:6 subsite meets the requirements for the direct contact hazard quotient and excess carcinogenic risk as identified in the 100-N Area RDR/RAWP (DOE-RL 2013).

Nonradionuclide Groundwater Hazard Quotient and Carcinogenic Risk RAGs Attained

Assessment of the risk requirements for the 100-N-84:6 subsite included a calculation of the hazard quotient and carcinogenic (excess cancer) risk values for groundwater protection for nonradionuclides. The requirements include an individual and cumulative hazard quotient of less than 1.0, an individual excess carcinogenic risk of less than 1×10^{-6}, and a cumulative excess carcinogenic risk of less than 1×10^{-5}. Risk values were calculated for constituents that were detected at concentrations above Hanford Site or Washington State background values or for which there is no background value. In addition, the soil-partitioning coefficients for these contaminants must be less than that necessary to show no migration to groundwater in 1,000 years based on RESRAD modeling discussed in Appendix C of the 100-N Area RDR/RAWP (DOE-RL 2013). Based on this model and a vadose zone of approximately 8 m (26.2 ft) in thickness, a K_d of 8.8 or greater is required to show no predicted migration to groundwater in 1,000 years. All individual hazard quotients for noncarcinogenic constituents are less than 1.0. The cumulative hazard quotient for the 100-N-84:6 subsite is 8.4×10^{-2}, which is less than 1.0. No carcinogenic constituents met the criteria for groundwater protection evaluation at the 100-N-84:6 subsite; therefore, no calculations of excess carcinogenic risk were performed. Therefore, nonradionuclide risk requirements related to groundwater are met.

DATA QUALITY ASSESSMENT

A data quality assessment (DQA) was performed to compare the verification sampling approach (WCH 2014f), the field logbook (WCH 2011a, 2014b, 2014c), and resulting analytical data with the sampling and data quality requirements specified by the project objectives and performance specifications.

The DQA for the 100-N-84:6 subsite established that the data are of the right type, quality, and quantity to support site closeout decisions within specified error tolerances. The evaluation verified that the sample design was sufficient for the purpose of clean site verification.

The cleanup verification sample analytical data are stored in a WCH project-specific database for data evaluation prior to archival in HEIS and are summarized in Appendix C. The detailed DQA is presented in Appendix D.

SUMMARY FOR INTERIM CLOSURE

The 100-N-84:6 subsite has been evaluated in accordance with the 100-N Area ROD (EPA 1999) and the 100-N Area RDR/RAWP (DOE-RL 2013). Verification sampling was performed, and the analytical results indicate that the residual concentrations of COPCs at the site meet the RAOs for direct exposure, groundwater protection, and river protection.

In accordance with this evaluation, the verification sampling results support a reclassification of the 100-N-84:6 subsite to Interim Closed Out. Contamination above direct exposure levels was not observed in the shallow zone soils and is concluded to not exist in deep zone soils. Institutional controls to prevent uncontrolled drilling or excavation into the deep zone of the sites are not required.

REFERENCES

40 CFR 141, "National Primary Drinking Water Regulations," *Code of Federal Regulations*, as amended.

BHI, 2001, *Calculation of Total Uranium Activity Corresponding to a Maximum Contaminant Level for Total Uranium of 30 Micrograms per Liter in Groundwater*, 0100X-CA-V0038, Rev. 0, Bechtel Hanford, Inc., Richland, Washington.

DOE Order 5400.5, *Radiation Protection of the Public and the Environment*, as amended, U.S. Department of Energy, Washington, D.C.

DOE-RL, 2006, *100-N Area Sampling and Analysis Plan for CERCLA Waste Sites*, DOE/RL-2005-92, Rev. 0, U.S. Department of Energy, Richland Operations Office, Richland, Washington.

DOE-RL, 2009, *Remedial Design Report/Remedial Action Work Plan for the 100 Area*, DOE/RL-96-17, Rev. 6, U.S. Department of Energy, Richland Operations Office, Richland, Washington.

DOE-RL, 2011, *Tri-Party Agreement Handbook Management Procedures*, RL-TPA-90-0001, Rev. 2, Guideline Number TPA-MP-14, "Maintenance of the Waste Information Data System (WIDS)," U.S. Department of Energy, Richland Operations Office, Richland, Washington.

DOE-RL, 2013, *Remedial Design Report/Remedial Action Work Plan for the 100-N Area*, DOE/RL-2005-93, Rev. 1, U.S. Department of Energy, Richland Operations Office, Richland, Washington.

Ecology, 1994, *Natural Background Soil Metals Concentrations in Washington State*, Publication No. 94-115, Washington State Department of Ecology, Olympia, Washington.

Ecology, 1996, "Model Toxics Control Act – Cleanup," *Washington Administrative Code* (WAC) 173-340, Washington State Department of Ecology, Olympia, Washington.

Ecology, 2014, Cleanup Levels and Risk Calculations (CLARC) Database, Washington State Department of Ecology, Olympia, Washington, <https://fortress.wa.gov/ecy/clarc/CLARCHome.aspx>.

ENV-1, *Environmental Monitoring & Management*, Washington Closure Hanford, Richland, Washington.

EPA, 1989, *Risk Assessment Guidance for Superfund, Volume I: Human Health Evaluation Manual, Part A; Interim Final*, EPA/540/1-89/002, U.S. Environmental Protection Agency, Washington, D.C.

EPA, 1999, *Interim Action Record of Decision for the 100-NR-1 and 100-NR-2 Operable Units, Hanford Site, Benton County, Washington*, U.S. Environmental Protection Agency, Region 10, Seattle, Washington.

EPA, 2011, *Explanation of Significant Differences for the 100-NR-1 and 100-NR-2 Operable Units Interim Remedial Action Record of Decision, Hanford Site, Benton County, Washington*, U.S. Environmental Protection Agency, Region 10, Seattle, Washington.

WAC 173-340, 1996, "Model Toxics Control Act – Cleanup," *Washington Administrative Code*.

WCH, 2010, *100-N-84:6 Remaining Site For Remedial Action*, CCN 152863 dated January 4, Interoffice Memorandum to S. W. Callison from M. L. Proctor, Washington Closure Hanford, Richland, Washington.

WCH 2011a, *100-N Field Remediation and Sampling*, Logbook EL-1652-03, pp. 10-19, 28-44, Washington Closure Hanford, Richland, Washington.

WCH, 2011b, "100-N FR South River Road Agreement," CCN 158653 to R. Varljen, Washington State Department of Ecology, from T. L. Faust, Washington Closure Hanford, Richland, Washington, May 19.

WCH, 2013a, "100-N-84:5/6 Proposal to Leave Segments in Place," CCN 173792 to W. Elliot, Washington State Department of Ecology, and J. Chance, U.S. Department of Energy, Richland Operations Office, from D. G. Saueressig, Washington Closure Hanford, Richland, Washington, November 18.

WCH, 2013b, *105-NA Emergency Diesel Enclosure & 1722-N Decontamination Building Completion*, Attachment to Facility Status Change Form D4-100N-0048, Washington Closure Hanford, Richland, Washington.

WCH, 2013c, *Cleanup Verification Package for the 100-N-63:2; Pipelines Between 109N, 105N, 107N, 1310N, 1322N, 1926N and 36' Process Drains to Outfall*, Attachment to Waste Site Reclassification Forms 2013-048, Washington Closure Hanford, Richland, Washington.

WCH, 2013d, Facility Status Change Form - 108-N Chemical Unloading Facility, D4-100N-0024, Washington Closure Hanford, Richland, Washington, February 28.

WCH, 2013e, *Remaining Sites Verification Package for the 100-N-23; Resin Disposal Pit Liquid Waste Site 1*, Attachment to Waste Site Reclassification Form 2013-009, Washington Closure Hanford, Richland, Washington.

WCH, 2013f, *Remaining Sites Verification Package for the 100-N-28; Resin Disposal Pit Liquid Waste Site 2, 100-N-61:2; Water Treatment and Storage Facilities Underground Pipelines East of 109-N, 100-N-62; 100-N, 105-N, 109-N, 163-N, 182-N, 183-N, and 184-N Underground Pipelines, 100-N-64:2; Cooling Water Effluent Underground Pipelines East of 109-N*, Attachment to Waste Site Reclassification Forms 2012-102, 2012-103, 2012-104, 2012-105, Washington Closure Hanford, Richland, Washington.

WCH, 2013g, *Remaining Sites Verification Package for the 100-N-31; Unplanned Release on 30-inch Pipe Line, 100-N-32; 100-N-32 Unplanned Release on 25-centimeter (10-inch) Blowdown Pipeline #3, 100-N-38; Unplanned Release at 1300-N, 100-N-61:3; Water Treatment and Storage Facilities Underground Pipelines West of 109-N Pipeline, 100-N-64:3; Cooling Water Effluent Underground Pipelines West of 109-N Pipeline, 100-N-68; N Basin Low Level Radioactive Water Spill; UPR-100-N-3, Spacer Disposal System Transport Line Leak, UPR-100-N-7; Ten-inch Radioactive Drain Return Line Leak, UPR-100-N-10; Lift Station Gravity Drain Line Leak, UPR-100-N-12; Spacer Transport Line Leak, UPR-100-N-39; Corridor 22 Suspect Liquid Unplanned Release,* Attachment to Waste Site Reclassification Forms 2013-065, 2013-066, 2013-067, 2013-068, 2013-069, 2013-070, 2013-071, 2013-072, 2013-073, 2013-074, 2013-075,Washington Closure Hanford, Richland, Washington.

WCH, 2013h, *Remaining Sites Verification Package for the 116-N-2; 1310-N Chemical Waste Storage Tank; 1310-N Waste Storage Area; The Golf Ball, UPR-100-N-5; 116-N-2 Radioactive Chemical Waste Treatment Storage Facility; 1310-N Chemical Waste Storage Tank Leak; UN-100-N-5, UPR-100-N-25; UN-100-N-25; Uncontrolled Venting of 1310-N Tank*, Attachment to Waste Site Reclassification Forms 2013-015, 2013-016, 2013-017, Washington Closure Hanford, Richland, Washington.

WCH, 2014a, "100-N Asphaltic Interferences," CCN 174967 to W. Elliot, Washington State Department of Ecology, and J. Chance, U.S. Department of Energy, Richland Operations Office, from J. M. Capron, Washington Closure Hanford, Richland, Washington, February 5.

WCH, 2014b, *100-N Field Remediation and Sampling*, Logbook EL-1652-11, pp. 54-55, Washington Closure Hanford, Richland, Washington.

WCH, 2014c, *100-N Field Remediation and Sampling*, Logbook EL-1652-12, pp. 15-28, Washington Closure Hanford, Richland, Washington.

WCH, 2014d, "Request to Backfill 100-N-84 Pipeline Segments," CCN 174313 to W. Elliot, Washington State Department of Ecology, and J. Chance, U.S. Department of Energy, Richland Operations Office, Richland, Washington, from D. G. Saueressig, Washington Closure Hanford, Richland, Washington, January 13.

WCH, 2014e, "Request to Verification Sample and Backfill Immediately Portions of 100-N-84 Pipeline Subsites that Cross Under Established Roadways," CCN 174966 to W. Elliott, Washington State Department of Ecology and J. Chance, U.S. Department of Energy, Richland Operations Office, from T. Q. Howell, Washington Closure Hanford, Richland, Washington.

WCH, 2014f, *Work Instruction for Verification Sampling of the 100-N-84:6, 100-N- Area Chemical and Process Sewer Pipelines,* 0100N-WI-G0090, Rev. 0, Washington Closure Hanford, Richland, Washington.

APPENDIX A

ECOLOGICAL RISK COMPARISON TABLE

Table A-1. Maximum Contaminant Concentrations that Exceed Ecological Screening Levels for the 100-N-84:6 Subsite [a].

Hazardous Substance		2001 WAC 173-340 Table 749-3			EPA Ecological Soil Screening Levels [b]				Statistical or Maximum Result
		Plants	Soil Biota	Wildlife	Plants	Soil Biota	Avian [c]	Mammalian [c]	
	Background	Metals (mg/kg)							
Barium	132	500	NA	102	NA	330	NA	2,000	194
Boron	NA	0.5	NA	NA	NA	NA	NA	NA	1.1
Cobalt	15.7	20	NA	NA	13	NA	120	230	15.3 (<BG)
Copper	22	100	50	217	70	80	28	49	58.0
Manganese	512	1,100 [d]	NA	1,500	220	450	4,300	4,000	579
Vanadium	85.1	2	NA	NA	NA	NA	7.8	280	104
Zinc	67.8	86 [d]	200	360	160	120	46	79	70.4

NOTE: Shaded cells indicate screening values that are exceeded.

[a] Exceedance of screening values does not necessarily indicate the existence of risk to ecological receptors. All exceedances must be evaluated in the context of additional lines of evidence for ecological effects following a baseline risk assessment for the river corridor portion of the Hanford Site, which will include a more complete quantitative ecological risk assessment.

[b] Available on the Internet at www.epa.gov/ecotox/ecossl.

[c] Wildlife.

[d] Benchmark replaced by Washington state natural background concentration from Ecology, 1994, *Natural Background Soil Metals Concentrations in Washington State*, Publication 94-115, Washington State Department of Ecology, Olympia, Washington.

BG = background
EPA = U.S. Environmental Protection Agency
NA = not available
WAC= *Washington Administrative Code*

APPENDIX B

IN-PROCESS SAMPLE DATA

APPENDIX B

IN-PROCESS SAMPLE DATA

Table B-1. In-Process Sample Data. (4 Pages)

Sample Number	Sample Date	Northing	Easting	Aluminum			Antimony			Arsenic			Barium		
				mg/kg	Q	PQL	mg/kg	Q	PQL	mg/kg	Q	PQL	mg/kg	Q	PQL
J1T705	12/17/2013	149287	571168.9	6300		1.6	0.39	U	0.39	3.0		0.67	65.1		0.077
J1T706	12/17/2013	149314	571179.9	5060		1.6	0.38	U	0.38	2.5		0.67	49.0		0.077
J1T7W9	1/15/2014	149700	571383.1	5810		1.5	0.36	U	0.36	2.9	M	0.63	57.7		0.072
J1T7X0	1/15/2014	149722	571374.5	6030		1.4	0.34	U	0.34	2.8		0.60	55.3		0.069
J1T969	2/3/2014	149283	571247.6	4170		1.5	0.37	U	0.37	2.0		0.64	46.6		0.073
J1T970	2/3/2014	149272	571252.1	8420		1.6	0.39	U	0.39	2.7		0.68	39.9		0.078
J1T971	2/3/2014	149279	571253	9710		1.4	1.8	U	1.8	1.3		0.61	145		0.070
J1TFC6	3/4/2014	149290	571222.4	3490	X	1.5	0.37	U	0.37	2.1		0.65	55.8	X	0.075
J1TFC7	3/4/2014	149320	571227.3	3490	X	1.4	0.35	U	0.35	1.2		0.61	39.0	X	0.070
J1TFC8	3/4/2014	149275	571251.4	7090	X	1.6	0.40	U	0.40	1.8		0.69	43.5	X	0.080

Sample Number	Sample Date	Northing	Easting	Beryllium			Boron			Cadmium			Calcium		
				mg/kg	Q	PQL	mg/kg	Q	PQL	mg/kg	Q	PQL	mg/kg	Q	PQL
J1T705	12/17/2013	149287	571168.9	0.28		0.034	1.0	B	1.0	0.33		0.042	6660		14.3
J1T706	12/17/2013	149314	571179.9	0.25		0.033	0.99	U	0.99	0.29		0.041	6340		14.3
J1T7W9	1/15/2014	149700	571383.1	0.18	B	0.031	0.94	B	0.93	0.077	B	0.039	5390	X	13.4
J1T7X0	1/15/2014	149722	571374.5	0.18		0.030	0.88	U	0.88	0.14	B	0.037	6740	X	12.7
J1T969	2/3/2014	149283	571247.6	0.032	U	0.032	0.95	U	0.95	0.040	U	0.040	3260		13.6
J1T970	2/3/2014	149272	571252.1	0.034	U	0.034	1.0	U	1.0	0.064	B	0.042	6270		14.5
J1T971	2/3/2014	149279	571253	0.59	B	0.15	0.91	U	0.91	0.085	B	0.038	7070		13.0
J1TFC6	3/4/2014	149290	571222.4	0.033	U	0.033	0.97	U	0.97	0.10	B	0.040	5000	X	13.9
J1TFC7	3/4/2014	149320	571227.3	0.031	U	0.031	0.91	U	0.91	0.069	B	0.038	3240	MX	13.1
J1TFC8	3/4/2014	149275	571251.4	0.16	B	0.035	1.0	U	1.0	0.070	B	0.043	5180	X	14.8

Sample Number	Sample Date	Northing	Easting	Chromium			Cobalt			Copper			Hexavalent Chromium		
				mg/kg	Q	PQL	mg/kg	Q	PQL	mg/kg	Q	PQL	mg/kg	Q	PQL
J1T705	12/17/2013	149287	571168.9	18.1		0.059	7.6	X	0.10	21.0		0.22	0.155	U	0.155
J1T706	12/17/2013	149314	571179.9	11.2		0.059	7.5	X	0.10	19.2		0.22	0.155	U	0.155
J1T7W9	1/15/2014	149700	571383.1	9.4	X	0.055	8.0	X	0.095	16.7	XM	0.21	0.228		0.155
J1T7X0	1/15/2014	149722	571374.5	16.9	X	0.052	6.6	X	0.090	15.0	X	0.20	0.251		0.155
J1T969	2/3/2014	149283	571247.6	4.6		0.056	4.3		0.097	12.3		0.21	0.577		0.155
J1T970	2/3/2014	149272	571252.1	16.4		0.060	4.8		0.10	19.1		0.22	1.6		0.155
J1T971	2/3/2014	149279	571253	3.1		0.054	12.2		0.46	21.4		1.0	0.286		0.155
J1TFC6	3/4/2014	149290	571222.4	2.8		0.057	7.7	X	0.098	14.9		0.21	0.166		0.155
J1TFC7	3/4/2014	149320	571227.3	2.0		0.054	6.5	X	0.093	11.1		0.20	0.155	U	0.155
J1TFC8	3/4/2014	149275	571251.4	4.9	X	0.061	5.2	X	0.10	17.1		0.23			

Sample Number	Sample Date	Northing	Easting	Iron			Lead			Magnesium			Manganese		
				mg/kg	Q	PQL	mg/kg	Q	PQL	mg/kg	Q	PQL	mg/kg	Q	PQL
J1T705	12/17/2013	149287	571168.9	19600	X	3.9	8.5		0.27	4530		3.8	295	X	0.10
J1T706	12/17/2013	149314	571179.9	19100	X	3.8	3.7		0.27	4480		3.7	278	X	0.10
J1T7W9	1/15/2014	149700	571383.1	25200	X	3.6	5.7		0.26	4280	X	3.5	307	X	0.095
J1T7X0	1/15/2014	149722	571374.5	18200	X	3.4	6.3		0.24	4540	X	3.3	269	X	0.090
J1T969	2/3/2014	149283	571247.6	28200		3.7	2.7		0.26	2380		3.6	117		0.097
J1T970	2/3/2014	149272	571252.1	27100		3.9	4.2		0.28	3370		3.8	169		0.10
J1T971	2/3/2014	149279	571253	30900		3.5	4.6		1.2	4510		17.1	328		0.092
J1TFC6	3/4/2014	149290	571222.4	19700	X	3.7	2.4		0.27	3330	X	3.6	247	X	0.098
J1TFC7	3/4/2014	149320	571227.3	13900	X	3.5	2.1		0.25	2500	X	3.4	190	X	0.093
J1TFC8	3/4/2014	149275	571251.4	20600	X	4.0	2.4		0.28	2720	X	3.9	146	X	0.10

Table B-1. In-Process Sample Data. (4 Pages)

Sample Number	Sample Date	Northing	Easting	Mercury			Molybdenum			Nickel			Potassium		
				mg/kg	Q	PQL	mg/kg	Q	PQL	mg/kg	Q	PQL	mg/kg	Q	PQL
J1T705	12/17/2013	149287	571168.9	0.0055	U	0.0055	0.31	B	0.26	12.2	X	0.12	1170		41.7
J1T706	12/17/2013	149314	571179.9	0.0057	BC	0.0057	0.26	U	0.26	9.2	X	0.12	851		41.5
J1T7W9	1/15/2014	149700	571383.1	0.0064	U	0.0064	0.26	BM	0.25	11.2	X	0.12	945		38.9
J1T7X0	1/15/2014	149722	571374.5	0.0051	U	0.0051	0.23	U	0.23	10.1	X	0.11	981		37.0
J1T969	2/3/2014	149283	571247.6	0.0059	U	0.0059	0.25	U	0.25	4.2		0.12	638		39.6
J1T970	2/3/2014	149272	571252.1	0.0067	U	0.0067	0.27	U	0.27	5.6		0.13	1500		42.3
J1T971	2/3/2014	149279	571253	0.0072	B	0.0057	0.29	B	0.24	6.1		0.11	1980		37.9
J1TFC6	3/4/2014	149290	571222.4	0.0052	UN	0.0052	0.26	U	0.26	5.9		0.12	568		40.4
J1TFC7	3/4/2014	149320	571227.3	0.0063	UN	0.0063	0.24	U	0.24	4.8		0.11	419		38.0
J1TFC8	3/4/2014	149275	571251.4	0.0059	UN	0.0059	0.27	U	0.27	5.6		0.13	994		42.9

Sample Number	Sample Date	Northing	Easting	Selenium			Silicon			Silver			Sodium		
				mg/kg	Q	PQL	mg/kg	Q	PQL	mg/kg	Q	PQL	mg/kg	Q	PQL
J1T705	12/17/2013	149287	571168.9	0.87	U	0.87	159	N	5.7	0.16	U	0.16	670		59.9
J1T706	12/17/2013	149314	571179.9	0.87	U	0.87	127	N	5.7	0.16	U	0.16	195		59.7
J1T7W9	1/15/2014	149700	571383.1	0.82	U	0.82	320	N	5.4	0.15	U	0.15	246		56.0
J1T7X0	1/15/2014	149722	571374.5	0.78	U	0.78	283	N	5.1	0.14	U	0.14	204		53.2
J1T969	2/3/2014	149283	571247.6	0.83	U	0.83	135		5.5	0.15	U	0.15	461		57.0
J1T970	2/3/2014	149272	571252.1	0.89	U	0.89	179		5.8	0.16	U	0.16	678		60.8
J1T971	2/3/2014	149279	571253	4.0	U	4.0	179		5.2	0.15	U	0.15	2880		54.5
J1TFC6	3/4/2014	149290	571222.4	0.85	U	0.85	336		5.6	0.16	U	0.16	313		58.1
J1TFC7	3/4/2014	149320	571227.3	0.80	U	0.80	146		5.2	0.15	U	0.15	328		54.7
J1TFC8	3/4/2014	149275	571251.4	0.90	U	0.90	202		5.9	0.17	U	0.17	1730		61.7

Sample Number	Sample Date	Northing	Easting	Vanadium			Zinc		
				mg/kg	Q	PQL	mg/kg	Q	PQL
J1T705	12/17/2013	149287	571168.9	48.6		0.095	68.4	X	0.40
J1T706	12/17/2013	149314	571179.9	49.5		0.095	42.1	X	0.40
J1T7W9	1/15/2014	149700	571383.1	47.6		0.089	42.8	X	0.38
J1T7X0	1/15/2014	149722	571374.5	40.6		0.085	63.7	X	0.36
J1T969	2/3/2014	149283	571247.6	39.9		0.091	26.3		0.38
J1T970	2/3/2014	149272	571252.1	71.4		0.097	125	MN	0.41
J1T971	2/3/2014	149279	571253	80.0		0.43	60.8		1.8
J1TFC6	3/4/2014	149290	571222.4	43.5		0.093	33.8	X	0.39
J1TFC7	3/4/2014	149320	571227.3	35.0		0.087	23.3	X	0.37
J1TFC8	3/4/2014	149275	571251.4	42.6	X	0.098	34.1	X	0.42

Table B-1. In-Process Sample Data. (4 Pages)

Sample Number	Sample Date	Northing	Easting	Bromide			Chloride			Fluoride			Nitrogen in Nitrate		
				mg/kg	Q	PQL	mg/kg	Q	PQL	mg/kg	Q	PQL	mg/kg	Q	PQL
J1T705	12/17/2013	149287	571169	0.39	U	0.39	30.8		2.0	0.83	U	0.83	3.4		0.32
J1T706	12/17/2013	149314	571180	0.39	U	0.39	8.1		2.0	0.82	UN	0.82	3.2		0.31
J1T7W9	1/15/2014	149700	571383	0.40	U	0.40	19.7		2.0	1.5	BN	0.83	2.0	B	0.32
J1T7X0	1/15/2014	149722	571375	0.39	U	0.39	13.3		2.0	1.3	B	0.82	2.9		0.31
J1TFC6	3/4/2014	149290	571222	0.40	U	0.40	6.1	C	2.1	0.87	B	0.85	0.32	U	0.32
J1TFC7	3/4/2014	149320	571227	0.40	U	0.40	6.1	C	2.1	0.84	U	0.84	0.32	U	0.32

Sample Number	Sample Date	Northing	Easting	Nitrogen in Nitrite and Nitrate			Nitrogen in Nitrite			Phosphorous in Phosphate			Sulfate		
				mg/kg	Q	PQL	mg/kg	Q	PQL	mg/kg	Q	PQL	mg/kg	Q	PQL
J1T705	12/17/2013	149287	571168.9				0.34	U	0.34	1.3	U	1.3	24.0		1.8
J1T706	12/17/2013	149314	571179.9				0.34	U	0.34	1.2	UN	1.2	22.0		1.7
J1T7W9	1/15/2014	149700	571383.1	1.4		0.37	0.34	U	0.34	1.3	UN	1.3	16.3		1.7
J1T7X0	1/15/2014	149722	571374.5	1.8		0.37	1.0	B	0.34	1.2	B	1.2	15.7		1.7
J1TFC6	3/4/2014	149290	571222.4	0.38	U	0.38	0.35	U	0.35	1.3	UN	1.3	4.7	B	1.8
J1TFC7	3/4/2014	149320	571227.3	0.38	U	0.38	0.35	U	0.35	1.3	U	1.3	3.6	B	1.8

Sample Number	Sample Date	Northing	Easting	TPH - Diesel Ext.			TPH - Diesel			% Moisture (wet sample)			pH Measurement		
				ug/kg	Q	PQL	ug/kg	Q	PQL	%	Q	PQL	pH	Q	PQL
J1T705	12/17/2013	149287	571168.9	38000		1000	27000		700	3.5		0.1			
J1T706	12/17/2013	149314	571179.9	2900	J	1000	2000	J	680	3.1		0.1			
J1T7W9	1/15/2014	149700	571383.1	7700		1000	4400		690	3.3		0.1	9.03		0.1
J1T7X0	1/15/2014	149722	571374.5	16000		1000	11000		690	4.5		0.1	8.98		0.1
J1T969	2/3/2014	149283	571247.6							6.7		0.1	6.67		0.1
J1T970	2/3/2014	149272	571252.1							10.2		0.1	4.15		0.1
J1T971	2/3/2014	149279	571253							8.3		0.1	8.27		0.1
J1TFC6	3/4/2014	149290	571222.4							5.1		0.1			
J1TFC7	3/4/2014	149320	571227.3							6.2		0.1			
J1TFC8	3/4/2014	149275	571251.4							7.2		0.1	4.81		0.1

Sample Area	HEIS Number	Sample Date	Chrysotile	Amosite	Crocidolite	Tremolite	Actinolite	Anthophyllite
			%	%	%	%	%	%
In-Process asbestos	J1T972	1/31/2014	6	16	ND	ND	ND	ND

[a] the required detection limit for asbestos is 1 %.

Table B-1. In-Process Sample Data. (4 Pages)

CONSTITUENT	CLASS	J1T705			J1T706			J1T7W9			J1T7X0			J1T969		
		12/17/2013			12/17/2013			1/15/2014			1/15/2014			2/3/2014		
		ug/kg	Q	PQL	ug/kg	Q	PQL	ug/kg	Q	PQL	ug/kg	Q	PQL	ug/kg	Q	PQL
Acenaphthene	PAH	3300	XD	99	10	U	10	10	U	10	88	J	10	10	U	10
Acenaphthylene	PAH	89	UD	89	9.1	U	9.1	9.1	U	9.1	9.4	U	9.4	9.3	U	9.3
Anthracene	PAH	6600	D	30	3.1	U	3.1	3.1	U	3.1	140		3.2	3.1	U	3.1
Benzo(a)anthracene	PAH	21000	D	31	10	JX	3.2	3.2	U	3.2	410		3.3	3.3	U	3.3
Benzo(a)pyrene	PAH	8400	D	63	14	J	6.5	6.5	U	6.5	190		6.7	6.6	U	6.6
Benzo(b)fluoranthene	PAH	9100	XD	41	12	JX	4.2	4.2	U	4.2	200		4.4	4.3	U	4.3
Benzo(ghi)perylene	PAH	2800	XD	71	7.3	U	7.3	7.3	U	7.3	100		7.5	7.4	U	7.4
Benzo(k)fluoranthene	PAH	4300	D	39	4.0	U	4.0	4.0	U	4.0	95		4.1	4.0	U	4.0
Chrysene	PAH	20000	D	48	17	JX	4.9	4.9	U	4.9	390		5.1	5.0	UN	5.0
Dibenz[a,h]anthracene	PAH	370	XD	110	11	U	11	11	U	11	11	U	11	11	U	11
Fluoranthene	PAH	37000	D	130	30	J	13	13	U	13	680		14	13	U	13
Fluorene	PAH	2500	D	52	5.3	U	5.3	5.3	U	5.3	55		5.5	5.4	U	5.4
Indeno(1,2,3-cd)pyrene	PAH	2200	XD	120	12	U	12	12	U	12	120		13	12	U	12
Naphthalene	PAH	120	UD	120	12	U	12	12	U	12	13	U	13	12	U	12
Phenanthrene	PAH	15000	D	120	12	U	12	12	U	12	340		13	12	U	12
Pyrene	PAH	41000	D	120	35	J	12	12	U	12	790		13	12	U	12
Aroclor-1016	PCB	2.7	U	2.7	2.8	U	2.8	2.8	U	2.8	2.9	U	2.9	2.9	U	2.9
Aroclor-1221	PCB	7.9	U	7.9	8.0	U	8.0	8.1	U	8.1	8.3	U	8.3	8.5	U	8.5
Aroclor-1232	PCB	2.0	U	2.0	2.0	U	2.0	2.0	U	2.0	2.1	U	2.1	2.1	U	2.1
Aroclor-1242	PCB	4.6	U	4.6	4.7	U	4.7	4.7	U	4.7	4.8	U	4.8	4.9	U	4.9
Aroclor-1248	PCB	4.6	U	4.6	4.7	U	4.7	4.7	U	4.7	4.8	U	4.8	4.9	U	4.9
Aroclor-1254	PCB	31		2.6	2.6	U	2.6	6.0	J	2.6	2.7	U	2.7	2.8	U	2.8
Aroclor-1260	PCB	2.6	UN	2.6	2.6	U	2.6	2.6	U	2.6	40		2.7	2.8	U	2.8

CONSTITUENT	CLASS	J1T970			J1T971			J1TFC6			J1TFC7		
		2/3/2014			2/3/2014			3/4/2014			3/4/2014		
		ug/kg	Q	PQL	ug/kg	Q	PQL	ug/kg	Q	PQL	ug/kg	Q	PQL
Acenaphthene	PAH	11	U	11	11	U	11						
Acenaphthylene	PAH	9.9	U	9.9	9.5	U	9.5						
Anthracene	PAH	3.4	U	3.4	3.2	U	3.2						
Benzo(a)anthracene	PAH	3.5	U	3.5	3.4	U	3.4						
Benzo(a)pyrene	PAH	7.0	U	7.0	6.8	U	6.8						
Benzo(b)fluoranthene	PAH	4.6	U	4.6	4.4	U	4.4						
Benzo(ghi)perylene	PAH	7.9	U	7.9	7.6	U	7.6						
Benzo(k)fluoranthene	PAH	4.3	U	4.3	4.2	U	4.2						
Chrysene	PAH	5.3	U	5.3	5.1	U	5.1						
Dibenz[a,h]anthracene	PAH	12	U	12	12	U	12						
Fluoranthene	PAH	14	U	14	14	U	14						
Fluorene	PAH	5.8	U	5.8	5.6	U	5.6						
Indeno(1,2,3-cd)pyrene	PAH	13	U	13	13	U	13						
Naphthalene	PAH	13	U	13	13	U	13						
Phenanthrene	PAH	13	U	13	13	U	13						
Pyrene	PAH	13	U	13	13	U	13						
Aroclor-1016	PCB	3.0	U	3.0	2.9	U	2.9	2.9	U	2.9	2.8	U	2.8
Aroclor-1221	PCB	8.8	U	8.8	8.5	U	8.5	8.4	U	8.4	8.0	U	8.0
Aroclor-1232	PCB	2.2	U	2.2	2.1	U	2.1	2.1	U	2.1	2.0	U	2.0
Aroclor-1242	PCB	5.1	U	5.1	4.9	U	4.9	4.9	U	4.9	4.7	U	4.7
Aroclor-1248	PCB	5.1	U	5.1	4.9	U	4.9	4.9	U	4.9	4.7	U	4.7
Aroclor-1254	PCB	2.8	U	2.8	2.7	U	2.7	2.7	U	2.7	2.6	U	2.6
Aroclor-1260	PCB	2.8	U	2.8	2.7	U	2.7	2.7	U	2.7	2.6	U	2.6

APPENDIX C

CALCULATIONS

APPENDIX C

CALCULATION BRIEFS

The calculations provided in this appendix are copies of originals that are kept in the active Washington Closure Hanford project files and are available upon request. When the project is completed, the file will be stored in a U.S. Department of Energy, Richland Operations Office repository. These calculations have been prepared in accordance with ENG-1, *Engineering Services*, ENG-1-4.5, "Project Calculations," Washington Closure Hanford, Richland, Washington. The calculations provided in this appendix include:

100-N-84:6 Subsite Cleanup Verification 95% UCL Calculation, 0100N-CA-V0284, Rev. 1, Washington Closure Hanford, Richland, Washington.

100-N-84:6 Subsite Direct Contact Hazard Quotient and Carcinogenic Risk Calculations, 0100N-CA-V0285, Rev. 0, Washington Closure Hanford, Richland, Washington.

100-N-84:6 Subsite Hazard Quotient and Carcinogenic Risk Calculations for Protection of Groundwater, 0100N-CA-V0286, Rev. 0, Washington Closure Hanford, Richland, Washington.

DISCLAIMER FOR CALCULATIONS

The calculations that are provided in this appendix have been generated to document compliance with established cleanup levels. These calculations should be used in conjunction with other relevant documents in the administrative record.

Acrobat 8.0

CALCULATION COVER SHEET

Project Title: 100-N Field Remediation **Job No. 14655**

Area: 100-N

Discipline: Environmental *Calculation No: 0100N-CA-V0284

Subject: 100-N-84:6 Subsite Cleanup Verification 95% UCL Calculation

Computer Program: Excel Program No: Excel 2010

The attached calculations have been generated to document compliance with established cleanup levels. These calculations should be used in conjunction with other relevant documents in the administrative record.

Committed Calculation ☒ Preliminary ☐ Superseded ☐ Voided ☐

Rev.	Sheet Numbers	Originator	Checker	Reviewer	Approval	Date
0	Cover = 1 Sheets = 11 Attm. 1 = 8 Total = 20	J. D. Skoglie	I. B. Berezovskiy	H. M. Sulloway	S. G. Wilkinson	Signed 6/24/14
1	Cover = 1 Sheets = 11 Attm. 1 = 8 Total = 20	J. D. Skoglie	I. B. Berezovskiy	J. M. Capron	S. G. Wilkinson	9/17/14

SUMMARY OF REVISION

1	Shaded all rejected "R" data in calculation. Sheet 3, Lines 4 and 12; added to the qualifier list "Grey cells indicate not applicable or data will not be used" and "R = rejected data" Sheet 7, Lines 15, 16, and 21; added "R" qualifier to Nitrogen in Nitrite and revised "% < Detection limit" from 83% to 0%. Sheet 10, Line 40; added "R" qualifier to Nitrogen in Nitrite Attachment 1 sheet 5, Sample Locations EXC-10, EXC-11, Split of J1TR30, RR-1, Duplicate of J1J4H9, and N-84-6a; added "R" qualifier to Nitrogen in Nitrite Attachment 1 sheet 5, Sample Locations Split of J1TR30, RR-1, Duplicate of J1J4H9, and N-84-6a; added "R" qualifier to Phosphorous in Phosphate. Attachment 1 sheet 7, Sample Locations RR-1 and Duplicate of J1J4H9; added "R" qualifier to Endosulfan II, Endosulfan Sulfate, and Methoxychlor.
WCH-DE-018 (05/08/2007)	*Obtain Calc. No. from Document Control and Form from Intranet

CALCULATION SHEET

Washington Closure Hanford

Originator	J. D. Skoglie	Date	06/18/14	Calc. No.	0100N-CA-V0284
Project	100-N Field Remediation	Job No.	14655	Checked	I. B. Berezovskiy
Subject	100-N-84:6 Subsite Cleanup Verification 95% UCL Calculations				

Rev. No. 0
Date 06/18/14
Sheet No. 1 of 11

Summary

Purpose:
Calculate the 95% upper confidence limit (UCL) values to evaluate compliance with cleanup standards for the subject site. Also, perform the *Washington Administrative Code* (WAC) 173-340-740(7)(e) Model Toxics Control Act (MTCA) 3-part test for nonradionuclide analytes and calculate the relative percent difference (RPD) for primary-duplicate sample pairs for each contaminant of concern (COC) and contaminant of potential concern (COPC), as necessary.

Table of Contents:
Sheets 1 to 4 - Calculation Sheet Summary
Sheets 5 to 7 - Calculation Sheet Verification Data - Statistical and Maximum Calculations
Sheets 8 to 9 - Ecology Software (MTCAStat) Results
Sheet 10 to 11 - Calculation Sheet Duplicate-Split Analysis (EXC and RR Samples)
Attachment 1 - 100-N-84:6, Verification Sampling Results (8 sheets)

Given/References:
1) Sample Results (Attachment 1).
2) DOE-RL, 2006, 100-N Area Sampling and Analysis Plan for CERCLA Waste Sites, DOE/RL-2005-92, Rev. 0, U.S. Department of Energy, Richland Operations Office, Richland, Washington.
3) DOE-RL, 2013, Remedial Design Report/Remedial Action Work Plan for the 100-N Area, DOE/RL-2005-93, Rev. 1, U.S. Department of Energy, Richland Operations Office, Richland, Washington.
4) Ecology, 1992, Statistical Guidance for Ecology Site Managers, Publication #92-54, Washington Department of Ecology, Olympia, Washington.
5) Ecology, 1993, Statistical Guidance for Ecology Site Managers, Supplement S-6, Analyzing Site or Background Data with Below-detection Limit or Below-PQL Values (Censored Data Sets), Publication #92-54, Washington Department of Ecology, Olympia, Washington.
6) Ecology, 2011, Cleanup Levels and Risk Calculations (CLARC) Database, Washington State Department of Ecology, Olympia, Washington, <https://fortress.wa.gov/ecy/clarc/CLARCHome.aspx>.
7) EPA, 1989, Risk Assessment Guidance for Superfund: Volume 1, Human Health Evaluation Manual, Part A; Interim Final, EPA/540/1-89/002, U.S. Environmental Protection Agency, Washington, D. C.
8) WAC 173-340, 1996, "Model Toxic Control Act - Cleanup," Washington Administrative Code.

Solution:
Calculation methodology is described in Ecology Pub. #92-54 (Ecology 1992, 1993), below, and in the RDR/RAWP (DOE-RL 2013). Use data from attached worksheets to perform the 95% UCL calculation for each analyte, the WAC 173-340-740(7)(e) 3-part test for nonradionuclides, and the RPD calculations for each COC/COPC. The hazard quotient and carcinogenic risk calculations are located in a separate calculation brief as an appendix to the Remaining Sites Verification Package (RSVP).

Calculation Description:
The subject calculations were performed on statistical and focused data from soil verification samples (Attachment 1) from the 100-N-84:6 subsite. The data were entered into an EXCEL 2010 spreadsheet and calculations performed by using the built-in spreadsheet functions and/or creating formulae within the cells. The statistical evaluation of data for use in accordance with the RDR/RAWP (DOE-RL 2013) is documented by this calculation. Duplicate RPD results are used in evaluation of data quality within the RSVP for this site.

Methodology:
The 100-N-84:6 subsite underwent statistical sampling at one decision unit; the excavation area (EXC) and focused sampling at three areas; river road, road crossing, and FS-1.

Analytical results for all sampling locations are summarized in the tables provided on sheet 4. Further information of the sample data quality is presented in the data quality assessment section of the associated RSVP.

Washington Closure Hanford CALCULATION SHEET

Originator J. D. Skoglie Date 06/18/14 Calc. No. 0100N-CA-V0284 Rev. No. 0
Project 100-N Field Remediation Job No. 14655 Checked I. B. Berezovskiy Date 06/18/14
Subject 100-N-84:6 Subsite Cleanup Verification 95% UCL Calculations Sheet No. 2 of 11

Summary (continued)

Methodology, continued:

For nonradioactive analytes with ≤50% of the data below detection limits, the statistical value calculated to evaluate the effectiveness of cleanup is the 95% UCL. For nonradioactive analytes with >50% of the data below detection limits, as determined by direct inspection of the sample results (Attachment 1), the maximum detected value for the data set (which includes primary and duplicate samples) is used instead of the 95% UCL, and no further calculations are performed for those data sets. For convenience, these maximum detected values are included in the summary tables that follow. The 95% UCL was not calculated for data sets with no reported detections. Calculated cleanup levels are not available in (Ecology 2011) under WAC 173-340-740(3) for calcium, magnesium, potassium, silicon, and sodium. The EPA's *Risk Assessment Guidance for Superfund* (EPA 1989) recommends that aluminum and iron not be considered in site risk evaluations. Therefore, aluminum, calcium, iron, magnesium, potassium, silicon, and sodium are not considered site COCs/COPCs and are also not included in these calculations.

The 95% UCL values were not calculated for potassium-40, radium-226, radium-228, thorium-228, and thorium-232 based on natural occurrence at the Hanford Site.

All nonradionuclide data reported as being undetected are set to ½ the detection limit value for calculation of the statistics (Ecology 1993). For the statistical evaluation of duplicate sample pairs, the samples are averaged before being included in the data set, after adjustments for censored data as described above. For radionuclide data, calculation of the statistics is done using the reported value. In cases where the laboratory does not report a value below the minimum detectable activity (MDA), half of the MDA is used in the calculation. For the statistical evaluation of duplicate sample pairs, the samples are averaged before being included in the data set, after adjustments for censored data as described above.

For nonradionuclides, the WAC 173-340 statistical guidance suggests that a test for distributional form be performed on the data and the 95% UCL calculated on the appropriate distribution using Ecology software. For nonradionuclide small data sets ($n < 10$), the calculations are performed assuming nonparametric distribution, so no tests for distribution are performed. For nonradionuclide data sets of ten or greater, as for the subject site, distributional testing is done using Ecology's MTCAStat software (Ecology 1993). Due to differences in addressing censored data between the RDR/RAWP (DOE-RL 2013) and MTCAStat coding and due to a limitation in the MTCAStat coding (no direct capability to address variable quantitation limits within a data set), substitutions for censored data are performed before software input and the resulting data set treated as uncensored.

The WAC 173-340-740(7)(e) 3-part test is performed for nonradionuclide analytes only and determines if:
1) the 95% UCL exceeds the most stringent cleanup limit for each COPC/COC,
2) greater than 10% of the raw data exceed the most stringent cleanup limit for each COPC/COC,
3) the maximum value of the raw data set exceeds two times the most stringent cleanup limit for each COPC/COC.

The RPD is calculated when both the primary value and either the duplicate or split value for a given analyte are above detection limits and are greater than 5 times the target detection limit (TDL). The TDL is a laboratory detection limit pre-determined for each analytical method and is listed in Table 2-1 of the SAP (DOE-RL 2006) for certain constituents. All other constituents will have their own pre-determined TDL's based on the laboratory and method used. Where direct evaluation of the attached sample data showed that a given analyte was not detected in the primary and/or duplicate sample, further evaluation of the RPD value was not performed. The RPD calculations use the following formula:

$$RPD = [\,|M-S|/((M+S)/2)]*100$$

where, M = Main Sample Value S = Split (or duplicate) Sample Value

For quality assurance/quality control (QA/QC) duplicate RPD calculations, a value less than 30% indicates the data compare favorably. If the RPD is greater than 30%, further investigation regarding the usability of the data is performed. To assist in the identification of anomalous sample pairs, when an analyte is detected in the primary or duplicate/split sample, but was quantified at less than 5 times the TDL in one or both samples, an additional parameter is evaluated. In this case, if the difference between the primary and duplicate/split result exceeds a control limit of 2 times the TDL, further assessment regarding the usability of the data is performed. Additional discussion as necessary is provided in the data quality assessment section of the applicable RSVP.

Washington Closure Hanford **CALCULATION SHEET**

Originator J. D. Skoglie **Date** 07/08/14 **Calc. No.** 0100N-CA-V0284 **Rev. No.** 1
Project 100-N Field Remediation **Job No.** 14655 **Checked** I. B. Berezovskiy **Date** 07/08/14
Subject 100-N-84:6 Subsite Cleanup Verification 95% UCL Calculations **Sheet No.** 3 of 11

Summary (continued)

QUALIFIER LIST

Grey cells indicate not applicable or data will not be used
*Duplicate analysis not within control limits
B = estimated result, result is less than the RL, but greater than MDL.
D = reported from a dilution.
J = estimate
M = duplicate precision not met.
N = recovery exceeds upper or lower control limits
P = target analyte with >40% difference between column analyses.
R = rejected data
U = undetected
X = serial dilution in the analytical batch indicates that physical and chemical interferences are present (metals).

ACRONYM LIST

-- = not applicable
DE = direct exposure
EXC = excavation
GW = groundwater
MTCA = *Model Toxics Control Act*
PQL = practical quantitation limit
Q = qualifier
QA/QC = quality assurance/quality control
RAG = remedial action goal
RDR/RAWP = remedial design report/remedial action work plan
RESRAD = RESidual RADioactivity (dose model)
RPD = relative percent difference
RR = river road
RSVP = remaining sites verification package
SAP = sampling and analysis plan
TDL = target detection limit
UCL = upper confidence limit
WAC = Washington Administrative Code

Washington Closure Hanford **CALCULATION SHEET**

Originator J. D. Skoglie **Date** 06/18/14 **Calc. No.** 0100N-CA-V0284 **Rev. No.** 0
Project 100-N Field Remediation **Job No.** 14655 **Checked** I. B. Berezovskiy **Date** 06/18/14
Subject 100-N-84:6 Subsite Cleanup Verification 95% UCL Calculations **Sheet No.** 4 of 11

Summary (continued)

Results:
The results presented in the tables that follow include the summary of the 95% UCL calculations and maximum results for the excavation, river road, road crossing, focused samples, the WAC 173-340-740(7)(e) 3-part test evaluation, and the RPD calculations are for use in risk analysis and the RSVP for this subsite.

Results Summary - Excavation Area Samples [a]

Analyte	Excavation		River Road (RR)	Road Crossing (N-84-6a)	FS-1	Units
	95% UCL Result	Maximum Result	Maximum Result	Maximum Result	Maximum Result	
Arsenic	3.2	--	1.5	3.1	1.2	mg/kg
Barium	70.4	--	50.3	45.8	194	mg/kg
Beryllium	--	0.12	--	--	--	mg/kg
Boron	1.1	--	--	1.0	--	mg/kg
Cadmium	0.12	--	0.050	0.099	0.066	mg/kg
Chromium	20.8	--	5.2	7.3	4.9	mg/kg
Cobalt	9.9	--	11.0	8.1	15.3	mg/kg
Copper	58.0	--	17.7	15.4	24.6	mg/kg
Hexavalent chromium	0.222	--	--	0.169	0.323	mg/kg
Lead	8.4	--	3.7	5.2	9.7	mg/kg
Manganese	339	--	332	309	579	mg/kg
Mercury	0.021	--	--	0.018	0.018	mg/kg
Molybdenum	--	0.43	0.59	--	0.32	mg/kg
Nickel	11.4	--	8.1	12.7	8.4	mg/kg
Vanadium	60.5	--	66.8	50.6	104	mg/kg
Zinc	70.4	--	44.6	42.1	64.3	mg/kg
Chloride	--	--	7.6	120	4.9	mg/kg
Fluoride	--	--	--	1.4	--	mg/kg
Nitrogen in nitrate	21.9	--	1.5	10.5	1.7	mg/kg
Nitrogen in nitrate and nitrite	--	--	1.1	13.4	--	mg/kg
Nitrogen in nitrite	--	0.77	--	--	--	mg/kg
Sulfate	72.6	--	5.2	18.8	138	mg/kg
Aroclor-1254	--	0.063	0.023	--	--	mg/kg
Aroclor-1260	--	0.12	0.0087	--	--	mg/kg
Benzo(a)anthracene	--	--	0.027	--	--	mg/kg
Benzo(b)fluoranthene	--	--	0.033	--	--	mg/kg
Chrysene	--	--	0.027	--	--	mg/kg
Phenanthrene	--	--	0.017	--	--	mg/kg
Pyrene	--	--	0.034	--	--	mg/kg

3-Part Test Evaluation:	**EXC**	
95% UCL or maximum [a] > Cleanup Limit?	YES	YES
> 10% above Cleanup Limit?	YES	YES
Any sample > 2x Cleanup Limit?	YES	YES

[a] The 95% UCL result or maximum value, depending on data censorship, as described in the methodology section.

Relative Percent Difference Results and QA/QC Analysis[a]

Analyte	Excavation (EXC)		River Road (RR)
	Duplicate	Split	Duplicate
Aluminum	2.1%	16.4%	11.4%
Barium	2.7%	4.8%	3.4%
Calcium	1.9%	3.7%	6.1%
Chromium	23.4%	***50.6%***	--
Cobalt	--	--	4.7%
Copper	***176.3%***	***170.5%***	0.0%
Iron	5.4%	5.4%	4.5%
Magnesium	0.6%	1.9%	2.9%
Manganese	2.0%	2.1%	8.2%
Silicon	8.8%	***85.1%***	12.0%
Sodium	1.6%	17.5	1.6%
Vanadium	4.5%	6.7%	4.3%
Zinc	25.6%	16.2%	1.8%
Nitrogen in nitrate	4.8%	4.5%	--

[a]RPD listed where result produced, based on criteria. If RPD not required, no value is listed. The significance of the reported RPD values, including values greater than 30%, and greater than 35% for splits, is addressed in the data quality assessment section of the RSVP.

CALCULATION SHEET

Washington Closure Hanford

Originator J. D. Skoglie	**Date** 06/18/14	**Calc. No.** 0100N-CA-V0284	**Rev. No.** 0
Project 100-N Field Remediation	**Job No.** 14655	**Checked** I. B. Berezovskiy	**Date** 06/18/14
Subject 100-N-84:6 Subsite Cleanup Verification 95% UCL Calculations			**Sheet No.** 5 of 11

100-N-84:6 Subsite Statistical Calculations

Verification Data - Excavation Area (EXC)

Sample Area	Sample Number	Sample Date	Arsenic mg/kg	Arsenic Q	Arsenic PQL	Barium mg/kg	Barium Q	Barium PQL	Boron mg/kg	Boron Q	Boron PQL	Cadmium mg/kg	Cadmium Q	Cadmium PQL	Chromium mg/kg	Chromium Q	Chromium PQL	Cobalt mg/kg	Cobalt Q	Cobalt PQL	Copper mg/kg	Copper Q	Copper PQL	Hexavalent Chromium mg/kg	Hexavalent Chromium Q	Hexavalent Chromium PQL
EXC-1	J1TR30	5/21/14	3.3		0.65	68.4		0.075	1.4	B	0.97	0.13	JBNM	0.040	21.1	J	0.057	7.5	X	0.098	386	JM	0.21	0.430		0.155
Duplicate of J1TR30	J1TR42	5/21/14	2.6		0.65	66.6		0.075	0.97	B	0.97	0.15	JBN	0.041	26.7	J	0.057	7.6	X	0.099	24.3	J	0.21	0.320		0.155
EXC-2	J1TR31	5/21/14	3.5		0.67	77.4		0.077	1.7	B	0.99	0.14	JBN	0.041	13.2	J	0.059	9.2	X	0.10	16.6	J	0.22	0.155	U	0.155
EXC-3	J1TR32	5/21/14	2.5		0.65	65.7		0.075	1.2	B	0.97	0.15	JBN	0.041	11.8	J	0.057	8.9	X	0.099	15.0	J	0.21	0.281		0.155
EXC-4	J1TR33	5/21/14	2.8		0.66	61.9		0.076	0.98	U	0.98	0.085	JBN	0.041	7.6	J	0.058	12.8	X	0.50	21.6	J	1.1	0.198		0.155
EXC-5	J1TR34	5/21/14	2.9		0.65	68.9		0.075	0.97	U	0.97	0.11	JBN	0.041	9.0	J	0.057	8.6	X	0.099	15.4	J	0.21	0.243		0.155
EXC-6	J1TR35	5/21/14	2.5		0.66	46.8		0.076	0.98	U	0.98	0.092	JBN	0.041	4.4	J	0.058	11.8	X	0.50	17.3	J	1.1	0.221		0.155
EXC-7	J1TR36	5/21/14	2.3		0.62	55.2		0.072	0.92	U	0.92	0.15	JBN	0.039	9.2	J	0.055	8.7	X	0.094	13.8	J	0.20	0.155	U	0.155
EXC-8	J1TR37	5/21/14	2.0		0.61	70.4		0.070	0.91	U	0.91	0.082	JBN	0.038	6.1	J	0.054	9.1	X	0.093	13.4	J	0.20	0.177		0.155
EXC-9	J1TR38	5/21/14	3.2		0.65	76.7		0.075	1.4	B	0.97	0.13	JBN	0.041	11.0	J	0.057	9.2	X	0.099	15.8	J	0.22	0.155	U	0.155
EXC-10	J1TR39	5/27/14	3.0		0.61	70.9		0.070	1.2	B	0.90	0.038	U	0.038	10.5		0.053	7.3	X	0.092	16.3	X	0.20	0.221		0.155
EXC-11	J1TR40	5/27/14	3.5		0.61	60.0		0.070	1.2	B	0.90	0.038	B	0.038	26.0		0.053	6.7	X	0.092	17.9	X	0.20	0.155	U	0.155
EXC-12	J1TR41	5/27/14	3.3		0.61	58.2		0.070	0.93	B	0.90	0.038	U	0.038	32.0		0.054	7.2	X	0.092	17.1	X	0.20	0.155	U	0.155

Statistical Computation Input Data

Sample Area	Sample Number	Sample Date	Arsenic mg/kg	Barium mg/kg	Boron mg/kg	Cadmium mg/kg	Chromium mg/kg	Cobalt mg/kg	Copper mg/kg	Hexavalent Chromium mg/kg
EXC-1	J1TR30/J1TR42	5/21/14	3.0	67.5	1.2	0.14	23.9	7.6	205	0.375
EXC-2	J1TR31	5/21/14	3.5	77.4	1.7	0.14	13.2	9.2	16.6	0.0775
EXC-3	J1TR32	5/21/14	2.5	65.7	1.2	0.15	11.8	8.9	15.0	0.281
EXC-4	J1TR33	5/21/14	2.8	61.9	0.49	0.085	7.6	12.8	21.6	0.198
EXC-5	J1TR34	5/21/14	2.9	68.9	0.49	0.11	9.0	8.6	15.4	0.243
EXC-6	J1TR35	5/21/14	2.5	46.8	0.49	0.092	4.4	11.8	17.3	0.221
EXC-7	J1TR36	5/21/14	2.3	55.2	0.46	0.15	9.2	8.7	13.8	0.0775
EXC-8	J1TR37	5/21/14	2.0	70.4	0.46	0.082	6.1	9.1	13.4	0.177
EXC-9	J1TR38	5/21/14	3.2	76.7	1.4	0.13	11.0	9.2	15.8	0.0775
EXC-10	J1TR39	5/27/14	3.0	70.9	1.2	0.019	10.5	7.3	16.3	0.221
EXC-11	J1TR40	5/27/14	3.5	60.0	1.2	0.038	26.0	6.7	17.9	0.0775
EXC-12	J1TR41	5/27/14	3.3	58.2	0.93	0.019	32.0	7.2	17.1	0.0775

Statistical Computations

	Arsenic	Barium	Boron	Cadmium	Chromium	Cobalt	Copper	Hexavalent Chromium
95% UCL based on	Large data set (n ≥ 10), use MTCAStat lognormal distribution.	Large data set (n ≥ 10), use MTCAStat lognormal distribution.	Large data set (n ≥ 10), lognormal and normal distribution rejected, use z-statistic.	Large data set (n ≥ 10), use MTCAStat normal distribution.	Large data set (n ≥ 10), use MTCAStat lognormal distribution.	Large data set (n ≥ 10), use MTCAStat lognormal distribution.	Large data set (n ≥ 10), lognormal and normal distribution rejected, use z-statistic.	Large data set (n ≥ 10), lognormal and normal distribution rejected, use z-statistic.
N	12	12	12	12	12	12	12	12
% < Detection limit	0%	0%	42%	17%	0%	0%	0%	42%
Mean	2.9	65.0	0.93	0.10	13.7	8.9	32.1	0.175
Standard deviation	0.47	9.0	0.44	0.049	8.7	1.8	54.5	0.0992
95% UCL on mean	3.2	70.4	1.1	0.12	20.8	9.9	58.0	0.222
Maximum value	3.5	77.4	1.7	0.15	32.0	12.8	386	0.430
Most Stringent Cleanup Limit for nonradionuclide and RAG type (mg/kg)	20 DE, GW & River Protection	200 GW Protection	320 GW Protection	0.81 GW & River Protection	18.5 GW & River Protection	32 GW Protection	22.0 River Protection	2 River Protection
WAC 173-340 3-PART TEST								
95% UCL > Cleanup Limit?	NA	NA	NO	NA	YES	NA	YES	NO
> 10% above Cleanup Limit?	NA	NA	NO	NA	YES	NA	YES	NO
Any sample > 2X Cleanup Limit?	NA	NA	NO	NA	NO	NA	YES	NO
WAC 173-340 Compliance?	Because all values are below background (6.5 mg/kg) the WAC 173-340 3-part test is not required.	Because all values are below background (132 mg/kg) the WAC 173-340 3-part test is not required.	The data set meets the 3-part test criteria when compared to the most stringent RAG.	Because all values are below background (0.81 mg/kg) the WAC 173-340 3-part test is not required.	A detailed assessment will be performed. The data set meets the 3-part test criteria when compared to the direct exposure RAG.	Because all values are below background (15.7 mg/kg) the WAC 173-340 3-part test is not required.	A detailed assessment will be performed. The data set meets the 3-part test criteria when compared to the direct exposure RAG.	The data set meets the 3-part test criteria when compared to the most stringent RAG.

Qualifiers are defined on page 3.

CALCULATION SHEET

Washington Closure Hanford

Originator J. D. Skoglie
Project 100-N Field Remediation
Subject 100-N-84:6 Subsite Cleanup Verification 95% UCL Calculations

Date 06/18/14
Job No. 14655

Calc. No. 0100N-CA-V0284
Checked I. B. Berezovskiy

Rev. No. 0
Date 06/18/14
Sheet No. 6 of 11

1 **100-N-84:6 Subsite Statistical Calculations**
2 **Verification Data - Excavation Area (EXC)**

3	Sample	Sample	Sample	Lead			Manganese			Mercury			Nickel			Vanadium			Zinc			Nitrogen in Nitrate			Sulfate		
4	Area	Number	Date	mg/kg	Q	PQL	mg/kg	Q	PQL	mg/kg	Q	PQL	mg/kg	Q	PQL	mg/kg	Q	PQL	mg/kg	Q	PQL	mg/kg	Q	PQL	mg/kg	Q	PQL
5	EXC-1	J1TR30	5/21/14	10.8		0.27	294		0.098	0.0090	B	0.0055	11.6	X	0.12	39.2		0.093	102	JN	0.39	4.1	J	0.30	18.1		1.6
6	Duplicate of J1TR30	J1TR42	5/21/14	10.5		0.27	300		0.099	0.0074	B	0.0055	11.4	X	0.12	41.0		0.093	132	J	0.39	4.3	J	0.29	19.2		1.6
7	EXC-2	J1TR31	5/21/14	7.0		0.27	358		0.10	0.0099	B	0.0051	11.4	X	0.12	51.5		0.095	48.5	J	0.40	1.9	JB	0.30	14.1		1.6
8	EXC-3	J1TR32	5/21/14	9.2		0.27	311		0.099	0.035		0.0048	11.2	X	0.12	50.5		0.093	46.9	J	0.39	13.8	J	0.30	251		1.6
9	EXC-4	J1TR33	5/21/14	8.3		1.4	383		0.10	0.0075	B	0.0053	10.5	X	0.12	82.7		0.47	53.8	J	0.40	0.89	JB	0.30	7.2		1.6
10	EXC-5	J1TR34	5/21/14	5.7		0.27	298		0.099	0.0087	B	0.0054	12.4	X	0.12	46.0		0.093	41.5	J	0.39	3.5	J	0.30	53.5		1.6
11	EXC-6	J1TR35	5/21/14	5.2		1.3	328		0.10	0.0069	B	0.0055	8.3	X	0.12	77.8		0.47	48.3	J	0.40	0.29	UR	0.29	4.7		1.6
12	EXC-7	J1TR36	5/21/14	5.8		0.25	297		0.094	0.054		0.0054	10.7	X	0.12	49.2		0.089	56.5	J	0.38	1.6	JB	0.30	8.4		1.6
13	EXC-8	J1TR37	5/21/14	3.9		0.25	356		0.093	0.0056	B	0.0048	8.4	X	0.11	56.2		0.087	42.3	J	0.37	1.0	JB	0.29	5.5		1.6
14	EXC-9	J1TR38	5/21/14	6.6		0.27	361		0.099	0.010	B	0.0056	12.2	X	0.12	51.0		0.093	82.2	J	0.39	1.3	JB	0.29	18.9		1.6
15	EXC-10	J1TR39	5/27/14	7.7		0.25	300		0.092	0.0058	U	0.0058	9.9	X	0.11	49.4		0.086	52.9	XN	0.37	1.7		0.21	13.3		1.1
16	EXC-11	J1TR40	5/27/14	6.3		0.25	293		0.092	0.0063	B	0.0056	10.9	X	0.11	45.2		0.086	59	X	0.37	2.3		0.21	10.9		1.1
17	EXC-12	J1TR41	5/27/14	9.2		0.25	297		0.092	0.0055	B	0.0052	9.4	X	0.11	53.7		0.087	73.5	X	0.37	26.5		0.21	68.7		1.1

18
19 **Statistical Computation Input Data**

20	Sample	Sample	Sample	Lead	Manganese	Mercury	Nickel	Vanadium	Zinc	Nitrogen in Nitrate	Sulfate
21	Area	Number	Date	mg/kg	mg/kg	mg/kg	mg/kg	mg/kg	mg/kg	mg/kg	mg/kg
22	EXC-1	J1TR30/J1TR42	5/21/14	10.7	297	0.0082	11.5	40.1	117	4.2	18.7
23	EXC-2	J1TR31	5/21/14	7.0	358	0.0099	11.4	51.5	48.5	1.9	14.1
24	EXC-3	J1TR32	5/21/14	9.2	311	0.035	11.2	50.5	46.9	13.8	251
25	EXC-4	J1TR33	5/21/14	8.3	383	0.0075	10.5	82.7	53.8	0.89	7.2
26	EXC-5	J1TR34	5/21/14	5.7	298	0.0087	12.4	46.0	41.5	3.5	53.5
27	EXC-6	J1TR35	5/21/14	5.2	328	0.0069	8.3	77.8	48.3	0.15	4.7
28	EXC-7	J1TR36	5/21/14	5.8	297	0.054	10.7	49.2	56.5	1.6	8.4
29	EXC-8	J1TR37	5/21/14	3.9	356	0.0056	8.4	56.2	42.3	1.0	5.5
30	EXC-9	J1TR38	5/21/14	6.6	361	0.010	12.2	51.0	82.2	1.3	18.9
31	EXC-10	J1TR39	5/27/14	7.7	300	0.0029	9.9	49.4	52.9	1.7	13.3
32	EXC-11	J1TR40	5/27/14	6.3	293	0.0063	10.9	45.2	59.0	2.3	10.9
33	EXC-12	J1TR41	5/27/14	9.2	297	0.0055	9.4	53.7	73.5	26.5	68.7

34 **Statistical Computations**

35		Lead	Manganese	Mercury	Nickel	Vanadium	Zinc	Nitrogen in Nitrate	Sulfate
36	95% UCL based on	Large data set (n ≥ 10), use MTCAStat lognormal distribution.	Large data set (n ≥ 10), lognormal and normal distribution rejected, use z-statistic.	Large data set (n ≥ 10), lognormal and normal distribution rejected, use z-statistic.	Large data set (n ≥ 10), use MTCAStat lognormal distribution.	Large data set (n ≥ 10), lognormal and normal distribution rejected, use z-statistic.	Large data set (n ≥ 10), lognormal and normal distribution rejected, use z-statistic.	Large data set (n ≥ 10), use MTCAStat lognormal distribution.	Large data set (n ≥ 10), lognormal and normal distribution rejected, use z-statistic.
37	N	12	12	12	12	12	12	12	12
38	% < Detection limit	0%	0%	8%	0%	0%	0%	8%	0%
39	Mean	7.1	323	0.013	10.6	54.4	60.2	4.9	39.6
40	Standard deviation	1.9	32.5	0.015	1.3	12.8	21.6	7.7	69.5
41	95% UCL on mean	8.4	339	0.021	11.4	60.5	70.4	21.9	72.6
42	Maximum value	10.8	383	0.054	12.4	82.7	132	26.5	251
43	**Most Stringent Cleanup Limit for nonradionuclide and RAG type (mg/kg)**	10.2 GW & River Protection	512 GW Protection	0.33 GW & River Protection	19.1 GW Protection	85.1 GW Protection	67.8 River Protection	1000 GW Protection	25000 River Protection
44	**WAC 173-340 3-PART TEST**								
45	95% UCL > Cleanup Limit?	NO	NA	NA	NA	NA	YES	NO	NO
46	> 10% above Cleanup Limit?	YES	NA	NA	NA	NA	YES	NO	NO
47	Any sample > 2X Cleanup Limit?	NO	NA	NA	NA	NA	NO	NO	NO
48	**WAC 173-340 Compliance?**	A detailed assessment will be performed. The data set meets the 3-part test criteria when compared to the direct exposure RAG.	Because all values are below background (512 mg/kg) the WAC 173-340 3-part test is not required.	Because all values are below background (0.33 mg/kg) the WAC 173-340 3-part test is not required.	Because all values are below background (19.1 mg/kg) the WAC 173-340 3-part test is not required.	Because all values are below background (85.1 mg/kg) the WAC 173-340 3-part test is not required.	A detailed assessment will be performed. The data set meets the 3-part test criteria when compared to the direct exposure RAG.	The data set meets the 3-part test criteria when compared to the most stringent RAG.	The data set meets the 3-part test criteria when compared to the most stringent RAG.

49 Qualifiers are defined on page 3.

MAXIMUM VALUE 3-PART TEST CALCULATION SHEET

Washington Closure Hanford

Originator J. D. Skoglie
Project 100-N Field Remediation
Subject 100-N-84:6 Subsite Cleanup Verification 95% UCL Calculations

Date 07/08/14
Job No. 14655

Calc. No. 0100N-CA-V0284
Checked I. B. Berezovskiy

Rev. No. 1
Date 07/08/14
Sheet No. 7 of 11

100-N-84:6 Subsite Maximum Calculations
Verification Data - Excavation (EXC)

Sample Area	Sample Number	Sample Date	Beryllium			Molybdenum			Nitrogen in Nitrite			Aroclor-1254			Aroclor-1260		
			mg/kg	Q	PQL	mg/kg	Q	PQL	mg/kg	Q	PQL	ug/kg	Q	PQL	ug/kg	Q	PQL
EXC-1	J1TR30	5/21/14	0.033	U	0.033	0.26	U	0.26	0.54	JB	0.32	14		2.5	2.5	U	2.5
Duplicate of J1TR30	J1TR42	5/21/14	0.033	U	0.033	0.26	U	0.26	0.52	JB	0.31	28		2.5	2.5	U	2.5
EXC-2	J1TR31	5/21/14	0.033	U	0.033	0.26	U	0.26	0.32	UR	0.32	2.6	U	2.6	2.6	U	2.6
EXC-3	J1TR32	5/21/14	0.033	U	0.033	0.26	U	0.26	0.32	UR	0.32	58		2.6	2.6	U	2.6
EXC-4	J1TR33	5/21/14	0.17	U	0.17	0.26	U	0.26	0.32	UR	0.32	4.3	J	2.6	2.6	U	2.6
EXC-5	J1TR34	5/21/14	0.033	U	0.033	0.26	U	0.26	0.32	UR	0.32	2.6	U	2.6	2.6	U	2.6
EXC-6	J1TR35	5/21/14	0.16	U	0.16	0.26	U	0.26	0.31	UR	0.31	2.6	U	2.6	2.6	U	2.6
EXC-7	J1TR36	5/21/14	0.031	U	0.031	0.25	U	0.25	0.33	UR	0.33	2.6	U	2.6	2.6	U	2.6
EXC-8	J1TR37	5/21/14	0.031	U	0.031	0.24	U	0.24	0.31	UR	0.31	2.5	U	2.5	4.6	J	2.5
EXC-9	J1TR38	5/21/14	0.033	U	0.033	0.26	U	0.26	0.31	UR	0.31	2.6	U	2.6	2.6	U	2.6
EXC-10	J1TR39	5/27/14	0.065	B	0.030	0.30	B	0.24	0.23	UR	0.23	63		2.4	2.4	UN	2.4
EXC-11	J1TR40	5/27/14	0.12	B	0.030	0.43	B	0.24	0.22	UR	0.22	36		2.6	2.6	U	2.6
EXC-12	J1TR41	5/27/14	0.030	U	0.030	0.25	B	0.24	0.77	B	0.22	4.8	UD	4.8	120	D	4.8

Statistical Computations

	Beryllium	Molybdenum	Nitrogen in Nitrite	Aroclor-1254	Aroclor-1260
% < Detection limit	83%	75%	0%	58%	83%
Maximum value	0.12	0.43	0.77	63	120
Most Stringent Cleanup Limit for nonradionuclide and RAG type (mg/kg)unless otherwise noted	1.51 GW & River Protection	8 GW Protection	100 GW Protection	17 ug/kg GW & River Protection	17 ug/kg GW & River Protection
3-PART TEST					
Maximum > Cleanup Limit?	NA	NO	NO	YES	YES
> 10% above Cleanup Limit?	NA	NO	NO	YES	NO
Any sample > 2X Cleanup Limit?	NA	NO	NO	YES	YES
3-Part Test Compliance?	Because all values are below background (1.51 mg/kg) the WAC 173-340 3-part test is not required.	The data set meets the 3-part test criteria when compared to the most stringent RAG.	The data set meets the 3-part test criteria when compared to the most stringent RAG.	A detailed assessment will be performed. The data set meets the 3-part test criteria when compared to the direct exposure RAG.	A detailed assessment will be performed. The data set meets the 3-part test criteria when compared to the direct exposure RAG.

CALCULATION SHEET

Washington Closure Hanford

Originator	J. D. Skoglie	Date	06/18/14
Project	100-N Field Remediation	Job No.	14655
Subject	100-N-84:6 Subsite Cleanup Verification 95% UCL Calculations		

Calc. No. 0100N-CA-V0284
Checked I. B. Berezovskiy

Rev. No. 0
Date 06/18/14
Sheet No. 8 of 11

Ecology Software (MTCAStat) Results, 100-N-84:6 Subsite Excavation (EXC)

Arsenic 95% UCL Calculation

DATA	ID
3.0	J1TR30/J1TR42
3.5	J1TR31
2.5	J1TR32
2.8	J1TR33
2.9	J1TR34
2.5	J1TR35
2.3	J1TR36
2.0	J1TR37
3.2	J1TR38
3.0	J1TR39
3.5	J1TR40
3.3	J1TR41

Number of samples		Uncensored values	
Uncensored	12	Mean	2.9
Censored		Lognormal mean	2.9
Detection limit or PQL		Std. devn.	0.47
Method detection limit		Median	2.9
TOTAL	12	Min.	2.0
		Max.	3.5

Lognormal distribution? r-squared is: 0.951
Normal distribution? r-squared is: 0.970
Recommendations:
Use lognormal distribution.

UCL (Land's method) is 3.2

Barium 95% UCL Calculation

DATA	ID
67.5	J1TR30/J1TR42
77.4	J1TR31
65.7	J1TR32
61.9	J1TR33
68.9	J1TR34
46.8	J1TR35
55.2	J1TR36
70.4	J1TR37
76.7	J1TR38
70.9	J1TR39
60.0	J1TR40
58.2	J1TR41

Number of samples		Uncensored values	
Uncensored	12	Mean	65.0
Censored		Lognormal mean	65.0
Detection limit or PQL		Std. devn.	8.97
Method detection limit		Median	66.6
TOTAL	12	Min.	46.8
		Max.	77.4

Lognormal distribution? r-squared is: 0.943
Normal distribution? r-squared is: 0.969
Recommendations:
Use lognormal distribution.

UCL (Land's method) is 70.4

Boron 95% UCL Calculation

DATA	ID
1.2	J1TR30/J1TR42
1.7	J1TR31
1.2	J1TR32
0.49	J1TR33
0.49	J1TR34
0.49	J1TR35
0.46	J1TR36
0.46	J1TR37
1.4	J1TR38
1.2	J1TR39
1.2	J1TR40
0.93	J1TR41

Number of samples		Uncensored values	
Uncensored	12	Mean	0.93
Censored		Lognormal mean	0.95
Detection limit or PQL		Std. devn.	0.44
Method detection limit		Median	1.1
TOTAL	12	Min.	0.46
		Max.	1.7

Lognormal distribution? r-squared is: 0.841
Normal distribution? r-squared is: 0.870
Recommendations:
Reject BOTH lognormal and normal distributions.

UCL (based on Z-statistic) is 1.1

Cadmium 95% UCL Calculation

DATA	ID
0.14	J1TR30/J1TR42
0.14	J1TR31
0.15	J1TR32
0.085	J1TR33
0.11	J1TR34
0.092	J1TR35
0.15	J1TR36
0.082	J1TR37
0.13	J1TR38
0.019	J1TR39
0.038	J1TR40
0.019	J1TR41

Number of samples		Uncensored values	
Uncensored	12	Mean	0.10
Censored		Lognormal mean	0.11
Detection limit or PQL		Std. devn.	0.049
Method detection limit		Median	0.10
TOTAL	12	Min.	0.019
		Max.	0.15

Lognormal distribution? r-squared is: 0.801
Normal distribution? r-squared is: 0.906
Recommendations:
Use normal distribution.

UCL (based on t-statistic) is 0.12

Chromium 95% UCL Calculation

DATA	ID
23.9	J1TR30/J1TR42
13.2	J1TR31
11.8	J1TR32
7.6	J1TR33
9.0	J1TR34
4.4	J1TR35
9.2	J1TR36
6.1	J1TR37
11.0	J1TR38
10.5	J1TR39
26.0	J1TR40
32.0	J1TR41

Number of samples		Uncensored values	
Uncensored	12	Mean	13.7
Censored		Lognormal mean	13.9
Detection limit or PQL		Std. devn.	8.7
Method detection limit		Median	10.8
TOTAL	12	Min.	4.4
		Max.	32.0

Lognormal distribution? r-squared is: 0.956
Normal distribution? r-squared is: 0.842
Recommendations:
Use lognormal distribution.

UCL (Land's method) is 20.8

Cobalt 95% UCL Calculation

DATA	ID
7.6	J1TR30/J1TR42
9.2	J1TR31
8.9	J1TR32
12.8	J1TR33
8.6	J1TR34
11.8	J1TR35
8.7	J1TR36
9.1	J1TR37
9.2	J1TR38
7.3	J1TR39
6.7	J1TR40
7.2	J1TR41

Number of samples		Uncensored values	
Uncensored	12	Mean	8.9
Censored		Lognormal mean	8.9
Detection limit or PQL		Std. devn.	1.8
Method detection limit		Median	8.8
TOTAL	12	Min.	6.7
		Max.	12.8

Lognormal distribution? r-squared is: 0.920
Normal distribution? r-squared is: 0.876
Recommendations:
Use lognormal distribution.

UCL (Land's method) is 9.9

Copper 95% UCL Calculation

DATA	ID
205	J1TR30/J1TR42
16.6	J1TR31
15.0	J1TR32
21.6	J1TR33
15.4	J1TR34
17.3	J1TR35
13.8	J1TR36
13.4	J1TR37
15.8	J1TR38
16.3	J1TR39
17.9	J1TR40
17.1	J1TR41

Number of samples		Uncensored values	
Uncensored	12	Mean	32.1
Censored		Lognormal mean	26.4
Detection limit or PQL		Std. devn.	54.5
Method detection limit		Median	16.5
TOTAL	12	Min.	13.4
		Max.	205

Lognormal distribution? r-squared is: 0.450
Normal distribution? r-squared is: NA
Recommendations:
Reject BOTH lognormal and normal distributions.

UCL (based on Z-statistic) is 58.0

Hexavalent chromium 95% UCL Calculation

DATA	ID
0.375	J1TR30/J1TR42
0.0775	J1TR31
0.281	J1TR32
0.198	J1TR33
0.243	J1TR34
0.221	J1TR35
0.0775	J1TR36
0.177	J1TR37
0.0775	J1TR38
0.221	J1TR39
0.0775	J1TR40
0.0775	J1TR41

Number of samples		Uncensored values	
Uncensored	12	Mean	0.175
Censored		Lognormal mean	0.179
Detection limit or PQL		Std. devn.	0.0992
Method detection limit		Median	0.188
TOTAL	12	Min.	0.0775
		Max.	0.375

Lognormal distribution? r-squared is: 0.846
Normal distribution? r-squared is: 0.878
Recommendations:
Reject BOTH lognormal and normal distributions.

UCL (based on Z-statistic) is 0.222

Lead 95% UCL Calculation

DATA	ID
10.7	J1TR30/J1TR42
7.0	J1TR31
9.2	J1TR32
8.3	J1TR33
5.7	J1TR34
5.2	J1TR35
5.8	J1TR36
3.9	J1TR37
6.6	J1TR38
7.7	J1TR39
6.3	J1TR40
9.2	J1TR41

Number of samples		Uncensored values	
Uncensored	12	Mean	7.1
Censored		Lognormal mean	7.2
Detection limit or PQL		Std. devn.	1.9
Method detection limit		Median	6.8
TOTAL	12	Min.	3.9
		Max.	10.7

Lognormal distribution? r-squared is: 0.977
Normal distribution? r-squared is: 0.982
Recommendations:
Use lognormal distribution.

UCL (Land's method) is 8.4

CALCULATION SHEET

Washington Closure Hanford

Originator	J. D. Skoglie	Date	06/18/14	Calc. No.	0100N-CA-V0284
Project	100-N Field Remediation	Job No.	14655	Checked	I. B. Berezovskiy
Subject	100-N-84:6 Subsite Cleanup Verification 95% UCL Calculations				

Rev. No.	0	
Date	06/18/14	
Sheet No.	9 of 11	

Ecology Software (MTCAStat) Results, 100-N-84:6 Subsite Excavation (EXC)

1	DATA	ID	Manganese 95% UCL Calculation					DATA	ID	Mercury 95% UCL Calculation				DATA	ID	Nickel 95% UCL Calculation			
2	297	J1TR30/J1TR42						0.0082	J1TR30/J1TR42					11.5	J1TR30/J1TR42				
3	358	J1TR31						0.0099	J1TR31					11.4	J1TR31				
4	311	J1TR32	Number of samples		Uncensored values			0.035	J1TR32	Number of samples		Uncensored values		11.2	J1TR32	Number of samples		Uncensored values	
5	383	J1TR33	Uncensored	12	Mean	323		0.0075	J1TR33	Uncensored	12	Mean	0.013	10.5	J1TR33	Uncensored	12	Mean	10.6
6	298	J1TR34	Censored		Lognormal mean	323		0.0087	J1TR34	Censored		Lognormal mean	0.013	12.4	J1TR34	Censored		Lognormal mean	10.6
7	328	J1TR35	Detection limit or PQL		Std. devn.	32.5		0.0069	J1TR35	Detection limit or PQL		Std. devn.	0.015	8.3	J1TR35	Detection limit or PQL		Std. devn.	1.3
8	297	J1TR36	Method detection limit		Median	306		0.054	J1TR36	Method detection limit		Median	0.0079	10.7	J1TR36	Method detection limit		Median	10.8
9	356	J1TR37	TOTAL	12	Min.	293		0.0056	J1TR37	TOTAL	12	Min.	0.0029	8.4	J1TR37	TOTAL	12	Min.	8.3
10	361	J1TR38			Max.	383		0.010	J1TR38			Max.	0.054	12.2	J1TR38			Max.	12.4
11	300	J1TR39						0.0029	J1TR39					9.9	J1TR39				
12	293	J1TR40						0.0063	J1TR40					10.9	J1TR40				
13	297	J1TR41						0.0055	J1TR41					9.4	J1TR41				
14																			
15			Lognormal distribution?		Normal distribution?					Lognormal distribution?		Normal distribution?				Lognormal distribution?		Normal distribution?	
16			r-squared is:	0.837	r-squared is:	0.832				r-squared is:	0.835	r-squared is:	0.596			r-squared is:	0.933	r-squared is:	0.954
17			Recommendations:							Recommendations:						Recommendations:			
18			Reject BOTH lognormal and normal distributions.							Reject BOTH lognormal and normal distributions.						Use lognormal distribution.			
19																			
20			UCL (based on Z-statistic) is		339					UCL (based on Z-statistic) is		0.021				UCL (Land's method) is		11.4	
21	DATA	ID	Vanadium 95% UCL Calculation					DATA	ID	Zinc 95% UCL Calculation				DATA	ID	Sulfate 95% UCL Calculation			
22	40.1	J1TR30/J1TR42						117	J1TR30/J1TR42					18.7	J1TR30/J1TR42				
23	51.5	J1TR31						48.5	J1TR31					14.1	J1TR31				
24	50.5	J1TR32	Number of samples		Uncensored values			46.9	J1TR32	Number of samples		Uncensored values		251	J1TR32	Number of samples		Uncensored values	
25	82.7	J1TR33	Uncensored	12	Mean	54.4		53.8	J1TR33	Uncensored	12	Mean	60.2	7.2	J1TR33	Uncensored	12	Mean	39.6
26	46.0	J1TR34	Censored		Lognormal mean	54.5		41.5	J1TR34	Censored		Lognormal mean	60.1	53.5	J1TR34	Censored		Lognormal mean	35.2
27	77.8	J1TR35	Detection limit or PQL		Std. devn.	12.8		48.3	J1TR35	Detection limit or PQL		Std. devn.	21.6	4.7	J1TR35	Detection limit or PQL		Std. devn.	69.5
28	49.2	J1TR36	Method detection limit		Median	50.8		56.5	J1TR36	Method detection limit		Median	53.4	8.4	J1TR36	Method detection limit		Median	13.7
29	56.2	J1TR37	TOTAL	12	Min.	40.1		42.3	J1TR37	TOTAL	12	Min.	41.5	5.5	J1TR37	TOTAL	12	Min.	4.7
30	51.0	J1TR38			Max.	82.7		82.2	J1TR38			Max.	117	18.9	J1TR38			Max.	251
31	49.4	J1TR39						52.9	J1TR39					13.3	J1TR39				
32	45.2	J1TR40						59.0	J1TR40					10.9	J1TR40				
33	53.7	J1TR41						73.5	J1TR41					68.7	J1TR41				
34																			
35			Lognormal distribution?		Normal distribution?					Lognormal distribution?		Normal distribution?				Lognormal distribution?		Normal distribution?	
36			r-squared is:	0.839	r-squared is:	0.773				r-squared is:	0.874	r-squared is:	0.770			r-squared is:	0.897	r-squared is:	0.511
37			Recommendations:							Recommendations:						Recommendations:			
38			Reject BOTH lognormal and normal distributions.							Reject BOTH lognormal and normal distributions.						Reject BOTH lognormal and normal distributions.			
39																			
40			UCL (based on Z-statistic) is		60.5					UCL (based on Z-statistic) is		70.4				UCL (based on Z-statistic) is		72.6	
41	DATA	ID	Nitrogen in nitrate 95% UCL Calculation																
42	4.2	J1TR30/J1TR42																	
43	1.9	J1TR31																	
44	13.8	J1TR32	Number of samples		Uncensored values														
45	0.89	J1TR33	Uncensored	12	Mean	4.9													
46	3.5	J1TR34	Censored		Lognormal mean	5.3													
47	0.15	J1TR35	Detection limit or PQL		Std. devn.	7.7													
48	1.6	J1TR36	Method detection limit		Median	1.8													
49	1.0	J1TR37	TOTAL	12	Min.	0.15													
50	1.3	J1TR38			Max.	26.5													
51	1.7	J1TR39																	
52	2.3	J1TR40																	
53	26.5	J1TR41																	
54																			
55			Lognormal distribution?		Normal distribution?														
56			r-squared is:	0.927	r-squared is:	0.586													
57			Recommendations:																
58			Use lognormal distribution.																
59																			
60			UCL (Land's method) is		21.9														

CALCULATION SHEET

Washington Closure Hanford

Originator J. D. Skoglie **Date** 07/08/14 **Calc. No.** 0100N-CA-V0284 **Rev. No.** 1
Project 100-N Field Remediation **Job No.** 14655 **Checked** I. B. Berezovskiy **Date** 07/08/14
Subject 100-N-84:6 Subsite Cleanup Verification 95% UCL Calculations **Sheet No.** 10 of 11

Duplicate/Split Analysis - 100-N-84:6 Subsite Excavation (EXC)

Sampling Area	Sample Number	Sample Date	Aluminum			Arsenic			Barium			Boron			Cadmium			Calcium			Chromium			Cobalt		
			mg/kg	Q	PQL	mg/kg	Q	PQL	mg/kg	Q	PQL	mg/kg	Q	PQL	mg/kg	Q	PQL	mg/kg	Q	PQL	mg/kg	Q	PQL	mg/kg	Q	PQL
EXC-1	J1TR30	5/21/14	7260		1.5	3.3		0.65	68.4		0.075	1.4	B	0.97	0.13	JBNM	0.040	9350		13.9	21.1	J	0.057	7.5	X	0.098
Duplicate of J1TR30	J1TR42	5/21/14	7110		1.5	2.6		0.65	66.6		0.075	0.97	B	0.97	0.15	JBN	0.041	9530		14.0	26.7	J	0.057	7.6	X	0.099
Split of J1TR30	J1TR45	5/21/14	6160		6.79	3.98	C	0.499	65.2		0.0999	1.21	B	0.999	0.425	B	0.0999	9700		7.99	35.4	*	0.15	7.45	D	0.749

Analysis:

	TDL	5	10	2	2	0.2	100	1	2
Duplicate Analysis	Both > PQL?	**Yes (continue)**	**Yes (continue)**	**Yes (continue)**	No-Stop (acceptable)	**Yes (continue)**	**Yes (continue)**	**Yes (continue)**	**Yes (continue)**
	Both >5xTDL?	**Yes (calc RPD)**	No-Stop (acceptable)	**Yes (calc RPD)**		No-Stop (acceptable)	**Yes (calc RPD)**	**Yes (calc RPD)**	No-Stop (acceptable)
	RPD	2.1%		2.7%			1.9%	23.4%	
	Difference > 2 TDL?	Not applicable	No - acceptable	Not applicable	No - acceptable	No - acceptable	Not applicable	Not applicable	No - acceptable
Split Analysis	Both > PQL?	**Yes (continue)**	**Yes (continue)**	**Yes (continue)**	**Yes (continue)**	**Yes (continue)**	**Yes (continue)**	**Yes (continue)**	**Yes (continue)**
	Both >5xTDL?	**Yes (calc RPD)**	No-Stop (acceptable)	**Yes (calc RPD)**	No-Stop (acceptable)	No-Stop (acceptable)	**Yes (calc RPD)**	**Yes (calc RPD)**	No-Stop (acceptable)
	RPD	16.4%		4.8%			3.7%	*50.6%*	
	Difference > 2 TDL?	Not applicable	No - acceptable	Not applicable	No - acceptable	No - acceptable	Not applicable	Not applicable	No - acceptable

Duplicate/Split Analysis - 100-N-84:6 Subsite Excavation (EXC)

Sampling Area	Sample Number	Sample Date	Copper			Hexavalent Chromium			Iron			Lead			Magnesium			Manganese			Mercury			Nickel		
			mg/kg	Q	PQL	mg/kg	Q	PQL	mg/kg	Q	PQL	mg/kg	Q	PQL	mg/kg	Q	PQL	mg/kg	Q	PQL	mg/kg	Q	PQL	mg/kg	Q	PQL
EXC-1	J1TR30	5/21/14	386	JM	0.21	0.430		0.155	18100		3.7	10.8		0.27	4770		3.6	294		0.098	0.0090	B	0.0055	11.6	X	0.12
Duplicate of J1TR30	J1TR42	5/21/14	24.3	J	0.21	0.320		0.155	19100		3.8	10.5		0.27	4800		3.7	300		0.099	0.0074	B	0.0055	11.4	X	0.12
Split of J1TR30	J1TR45	5/21/14	30.7	*	0.30	0.121	U	0.121	19100		7.99	1.65	DU	1.65	4860		8.49	288		0.20	0.00391	U	0.00391	11.2		0.15

Analysis:

	TDL	1	0.5	5	5	75	5	0.2	4
Duplicate Analysis	Both > PQL?	**Yes (continue)**	**Yes (continue)**	**Yes (continue)**	**Yes (continue)**	**Yes (continue)**	**Yes (continue)**	**Yes (continue)**	**Yes (continue)**
	Both >5xTDL?	**Yes (calc RPD)**	No-Stop (acceptable)	**Yes (calc RPD)**	No-Stop (acceptable)	**Yes (calc RPD)**	**Yes (calc RPD)**	No-Stop (acceptable)	No-Stop (acceptable)
	RPD	*176.3%*		5.4%		0.6%	2.0%		
	Difference > 2 TDL?	Not applicable	No - acceptable	Not applicable	No - acceptable	Not applicable	Not applicable	No - acceptable	No - acceptable
Split Analysis	Both > PQL?	**Yes (continue)**	No-Stop (acceptable)	**Yes (continue)**	No-Stop (acceptable)	**Yes (continue)**	**Yes (continue)**	No-Stop (acceptable)	**Yes (continue)**
	Both >5xTDL?	**Yes (calc RPD)**		**Yes (calc RPD)**		**Yes (calc RPD)**	**Yes (calc RPD)**		No-Stop (acceptable)
	RPD	*170.5%*		5.4%		1.9%	2.1%		
	Difference > 2 TDL?	**Not applicable**	No - acceptable	Not applicable	No - acceptable	Not applicable	Not applicable	No - acceptable	No - acceptable

Duplicate/Split Analysis - 100-N-84:6 Subsite Excavation (EXC)

Sampling Area	Sample Number	Sample Date	Potassium			Silicon			Sodium			Vanadium			Zinc			Chloride			Nitrogen in Nitrate			Nitrogen in Nitrite		
			mg/kg	Q	PQL	mg/kg	Q	PQL	mg/kg	Q	PQL	mg/kg	Q	PQL	mg/kg	Q	PQL	mg/kg	Q	PQL	mg/kg	Q	PQL	mg/kg	Q	PQL
EXC-1	J1TR30	5/21/14	1310		40.4	298	JXN	5.6	436		58.1	39.2		0.093	102	JN	0.39	4.9		1.9	4.1	J	0.30	0.54	JB	0.32
Duplicate of J1TR30	J1TR42	5/21/14	1280		40.6	273	JX	5.6	429		58.4	41.0		0.093	132	J	0.39	5.0		1.9	4.3	J	0.29	0.52	JB	0.31
Split of J1TR30	J1TR45	5/21/14	1170	N	6.39	739	N	1.5	366		6.99	41.9	DN	0.499	120	DN	2.0	3.3		0.664	3.92		0.327	0.327	UR	0.327

Analysis:

	TDL	400	2	50	2.5	1	2	0.75	0.75
Duplicate Analysis	Both > PQL?	**Yes (continue)**	**Yes (continue)**	**Yes (continue)**	**Yes (continue)**	**Yes (continue)**	**Yes (continue)**	**Yes (continue)**	**Yes (continue)**
	Both >5xTDL?	No-Stop (acceptable)	**Yes (calc RPD)**	**Yes (calc RPD)**	**Yes (calc RPD)**	**Yes (calc RPD)**	No-Stop (acceptable)	**Yes (calc RPD)**	No-Stop (acceptable)
	RPD		8.8%	1.6%	4.5%	25.6%		4.8%	
	Difference > 2 TDL?	No - acceptable	Not applicable	Not applicable	Not applicable	Not applicable	No - acceptable	Not applicable	
Split Analysis	Both > PQL?	**Yes (continue)**	**Yes (continue)**	**Yes (continue)**	**Yes (continue)**	**Yes (continue)**	**Yes (continue)**	**Yes (continue)**	
	Both >5xTDL?	No-Stop (acceptable)	**Yes (calc RPD)**	**Yes (calc RPD)**	**Yes (calc RPD)**	**Yes (calc RPD)**	No-Stop (acceptable)	**Yes (calc RPD)**	
	RPD		*85.1%*	17.5%	6.7%	16.2%		4.5%	
	Difference > 2 TDL?	No - acceptable	Not applicable	Not applicable	Not applicable	Not applicable	No - acceptable	Not applicable	

Duplicate/Split Analysis - 100-N-84:6 Subsite Excavation (EXC)

Sampling Area	Sample Number	Sample Date	Sulfate			Aroclor-1254		
			mg/kg	Q	PQL	ug/kg	Q	PQL
EXC-1	J1TR30	5/21/14	18.1		1.6	14		2.5
Duplicate of J1TR30	J1TR42	5/21/14	19.2		1.6	28		2.5
Split of J1TR30	J1TR45	5/21/14	22.1		1.32	13.1	D	2.24

Analysis:

	TDL	5	20
Duplicate Analysis	Both > PQL?	**Yes (continue)**	**Yes (continue)**
	Both >5xTDL?	No-Stop (acceptable)	No-Stop (acceptable)
	RPD		
	Difference > 2 TDL?	No - acceptable	No - acceptable
Split Analysis	Both > PQL?	**Yes (continue)**	**Yes (continue)**
	Both >5xTDL?	No-Stop (acceptable)	No-Stop (acceptable)
	RPD		
	Difference > 2 TDL?	No - acceptable	No - acceptable

CALCULATION SHEET

Washington Closure Hanford

Originator J. D. Skoglie
Project 100-N Field Remediation
Subject 100-N-84:6 Subsite Cleanup Verification 95% UCL Calculations

Date 06/18/14
Job No. 14655

Calc. No. 0100N-CA-V0284
Checked I. B. Berezovskiy

Rev. No. 0
Date 06/18/14
Sheet No. 11 of 11

Duplicate Analysis - 100-N-84:6 Subsite River Road Samples (RR)

Sampling Area	Sample Number	Sample Date	Radium-226			Aluminum			Arsenic			Barium			Cadmium			Calcium			Chromium			Cobalt		
			pCi/g	Q	MDA	mg/kg	Q	PQL	mg/kg	Q	PQL	mg/kg	Q	PQL	mg/kg	Q	PQL	mg/kg	Q	PQL	mg/kg	Q	PQL	mg/kg	Q	PQL
RR-1	J1J4H9	6/13/11	0.326		0.0672	4880	X	1.5	1.5	M	0.63	50.3	X	0.072	0.050	B	0.039	6100	X	13.4	4.5	X	0.055	11.0	X	0.095
Duplicate of J1J4H9	J1J4J0	6/13/11	0.403		0.0379	5470	X	1.3	1.5		0.57	48.6	X	0.066	0.040	B	0.035	5740	X	12.2	5.2	X	0.050	10.5	X	0.086

Analysis:

	TDL	0.1	5	10	2	0.2	100	1	2
Duplicate Analysis	Both > PQL?	Yes (continue)	Yes (continue)	Yes (continue)	Yes (continue)	Yes (continue)	Yes (continue)	Yes (continue)	Yes (continue)
	Both >5xTDL?	No-Stop (acceptable)	Yes (calc RPD)	No-Stop (acceptable)	Yes (calc RPD)	No-Stop (acceptable)	Yes (calc RPD)	No-Stop (acceptable)	Yes (calc RPD)
	RPD		11.4%		3.4%		6.1%		4.7%
	Difference > 2 TDL?	No - acceptable	Not applicable	No - acceptable	Not applicable	No - acceptable	Not applicable	No - acceptable	Not applicable

Duplicate Analysis - 100-N-84:6 Subsite River Road Samples (RR)

Sampling Area	Sample Number	Sample Date	Copper			Iron			Lead			Magnesium			Manganese			Molybdenum			Nickel			Potassium		
			mg/kg	Q	PQL	mg/kg	Q	PQL	mg/kg	Q	PQL	mg/kg	Q	PQL	mg/kg	Q	PQL	mg/kg	Q	PQL	mg/kg	Q	PQL	mg/kg	Q	PQL
RR-1	J1J4H9	6/13/11	17.7	X	0.21	27300	X	3.6	3.0		0.26	4540	X	3.5	332	X	0.095	0.51	B	0.25	8.1	X	0.12	712		39.1
Duplicate of J1J4H9	J1J4J0	6/13/11	17.7	X	0.19	26100	X	3.3	3.7		0.23	4410	X	3.2	306	X	0.086	0.59	B	0.22	8.0	X	0.11	781		35.3

Analysis:

	TDL	1	5	5	75	5	2	4	400
Duplicate Analysis	Both > PQL?	Yes (continue)	Yes (continue)	Yes (continue)	Yes (continue)	Yes (continue)	Yes (continue)	Yes (continue)	Yes (continue)
	Both >5xTDL?	Yes (calc RPD)	Yes (calc RPD)	No-Stop (acceptable)	Yes (calc RPD)	Yes (calc RPD)	No-Stop (acceptable)	No-Stop (acceptable)	No-Stop (acceptable)
	RPD	0.0%	4.5%		2.9%	8.2%			
	Difference > 2 TDL?	Not applicable	Not applicable	No - acceptable	Not applicable	Not applicable	No - acceptable	No - acceptable	No - acceptable

Duplicate Analysis - 100-N-84:6 Subsite River Road Samples (RR)

Sampling Area	Sample Number	Sample Date	Silicon			Sodium			Vanadium			Zinc			Chloride			Nitrogen in Nitrate			Nitrogen in Nitrite and Nitrate			Sulfate		
			mg/kg	Q	PQL	mg/kg	Q	PQL	mg/kg	Q	PQL	mg/kg	Q	PQL	mg/kg	Q	PQL	mg/kg	Q	PQL	mg/kg	Q	PQL	mg/kg	Q	PQL
RR-1	J1J4H9	6/13/11	176		5.4	309		56.3	64.0	X	0.090	43.8	X	0.38	7.1		2.0	1.5	B	0.32	1.1		0.31	5.2		1.8
Duplicate of J1J4H9	J1J4J0	6/13/11	156		4.9	314		50.9	66.8	X	0.081	44.6	X	0.36	7.6		2.0	1.4	B	0.31	0.83		0.31	5.2		1.7

Analysis:

	TDL	2	50	2.5	1	2	0.75	0.75	5
Duplicate Analysis	Both > PQL?	Yes (continue)	Yes (continue)	Yes (continue)	Yes (continue)	Yes (continue)	Yes (continue)	Yes (continue)	Yes (continue)
	Both >5xTDL?	Yes (calc RPD)	Yes (calc RPD)	Yes (calc RPD)	Yes (calc RPD)	No-Stop (acceptable)	No-Stop (acceptable)	No-Stop (acceptable)	No-Stop (acceptable)
	RPD	12.0%	1.6%	4.3%	1.8%				
	Difference > 2 TDL?	Not applicable	Not applicable	Not applicable	Not applicable	No - acceptable	No - acceptable	No - acceptable	No - acceptable

Duplicate Analysis - 100-N-84:6 Subsite River Road Samples (RR)

Sampling Area	Sample Number	Sample Date	Aroclor-1254			Aroclor-1260			Benzo(a)anthracene			Pyrene		
			ug/kg	Q	PQL	ug/kg	Q	PQL	ug/kg	Q	PQL	ug/kg	Q	PQL
RR-1	J1J4H9	6/13/11	23	P	2.6	8.7	J	2.6	27	J	20	44	J	12
Duplicate of J1J4H9	J1J4J0	6/13/11	16	P	2.5	4.4	JP	2.5	24	J	20	34	J	12

Analysis:

	TDL	20	20	660	660
Duplicate Analysis	Both > PQL?	Yes (continue)	Yes (continue)	Yes (continue)	Yes (continue)
	Both >5xTDL?	No-Stop (acceptable)	No-Stop (acceptable)	No-Stop (acceptable)	No-Stop (acceptable)
	RPD				
	Difference > 2 TDL?	No - acceptable	No - acceptable	No - acceptable	No - acceptable

Attachment 1. 100-N-84:6 Subsite River Road Verification Sample Results (Radionuclides).

Sample Location	HEIS Number	Sample Date	Americium-241			Cesium-137			Cobalt-60			Europium-152		
			pCi/g	Q	MDA	pCi/g	Q	MDA	pCi/g	Q	MDA	pCi/g	Q	MDA
RR-1	J1J4H9	6/13/11	-0.0315	U	0.0582	-0.00579	U	0.0372	0.00135	U	0.0324	-0.0350	U	0.0919
Duplicate of J1J4H9	J1J4J0	6/13/11	-0.0419	U	0.125	0.00666	U	0.0205	-0.00249	U	0.0220	-0.00886	U	0.0479

Sample Location	HEIS Number	Sample Date	Europium-154			Europium-155			Radium-226			Total beta radiostrontium		
			pCi/g	Q	MDA	pCi/g	Q	MDA	pCi/g	Q	MDA	pCi/g	Q	MDA
RR-1	J1J4H9	6/13/11	-0.0474	U	0.108	0.0205	U	0.0867	0.326		0.0672	0.00677	U	0.173
Duplicate of J1J4H9	J1J4J0	6/13/11	0.0278	U	0.0808	0.0435	U	0.0606	0.403		0.0379	0.0474	U	0.166

*Duplicate analysis not within control limits
B = blank contamination (inorganic constituents)
C = </= 5x blank concentration
D = reported from a dilution.
EXC = excavation
FS = focused sample
HEIS = Hanford Environmental Information System
J = estimate
M = duplicate precision not met.
N = recovery outside control limits
P = target analyte with >40% difference between column analyses.
PQL = practical quantitation limit
Q = qualifier
R = rejected
RR = river road
U = undete and confirmation detector results.
X = >40% difference between primary

Attachment	1	Sheet No.	1 of 8
Originator	J. D. Skoglie	Date	6/18/14
Checked	I. B. Berezovskiy	Date	6/18/14
Calc. No.	0100N-CA-V0284	Rev. No.	0

Attachment 1. 100-N-84:6 Subsite Verification Sample Results (Metals).

Sample Location	HEIS Number	Sample Date	Aluminum			Antimony			Arsenic			Barium		
			mg/kg	Q	PQL	mg/kg	Q	PQL	mg/kg	Q	PQL	mg/kg	Q	PQL
EXC-1	J1TR30	5/21/14	7260		1.5	0.37	UJ	0.37	3.3		0.65	68.4		0.075
Duplicate of J1TR30	J1TR42	5/21/14	7110		1.5	0.38	UJ	0.38	2.6		0.65	66.6		0.075
EXC-2	J1TR31	5/21/14	8890		1.6	0.38	UJ	0.38	3.5		0.67	77.4		0.077
EXC-3	J1TR32	5/21/14	6740		1.5	0.38	UJ	0.38	2.5		0.65	65.7		0.075
EXC-4	J1TR33	5/21/14	6750		1.6	1.9	UJ	1.9	2.8		0.66	61.9		0.076
EXC-5	J1TR34	5/21/14	6670		1.5	0.38	UJ	0.38	2.9		0.65	68.9		0.075
EXC-6	J1TR35	5/21/14	4790		1.5	1.9	UJ	1.9	2.5		0.66	46.8		0.076
EXC-7	J1TR36	5/21/14	6880		1.5	0.36	UJ	0.36	2.3		0.62	55.2		0.072
EXC-8	J1TR37	5/21/14	4910		1.4	0.35	UJ	0.35	2.0		0.61	70.4		0.070
EXC-9	J1TR38	5/21/14	8540		1.5	0.38	UJ	0.38	3.2		0.65	76.7		0.075
EXC-10	J1TR39	5/27/14	7520		1.4	0.35	U	0.35	3.0		0.61	70.9		0.070
EXC-11	J1TR40	5/27/14	7680		1.4	0.35	U	0.35	3.5		0.61	60.0		0.070
EXC-12	J1TR41	5/27/14	7120		1.4	0.35	U	0.35	3.3		0.61	58.2		0.070
Split of J1TR30	J1TR45	5/21/14	6160		6.79	1.65	DU	1.65	3.98	C	0.499	65.2		0.0999
RR-1	J1J4H9	6/13/11	4880	X	1.5	0.36	U	0.36	1.5	M	0.63	50.3	X	0.072
Duplicate of J1J4H9	J1J4J0	6/13/11	5470	X	1.3	0.33	U	0.33	1.5		0.57	48.6	X	0.066
N-84-6a	J1T9D9	2/6/14	6150		1.7	0.40	U	0.40	3.1		0.70	45.8	X	0.081
FS-1	J1TR44	5/21/14	12500		1.6	1.9	UJ	1.9	1.2		0.67	194		0.077
Equipment Blank	J1TR43	5/21/14	91.4		1.3	0.33	UJ	0.33	0.57	U	0.57	1.1		0.066

Sample Location	HEIS Number	Sample Date	Beryllium			Boron			Cadmium			Calcium		
			mg/kg	Q	PQL	mg/kg	Q	PQL	mg/kg	Q	PQL	mg/kg	Q	PQL
EXC-1	J1TR30	5/21/14	0.033	U	0.033	1.4	B	0.97	0.13	JBNM	0.040	9350		13.9
Duplicate of J1TR30	J1TR42	5/21/14	0.033	U	0.033	0.97	B	0.97	0.15	JBN	0.041	9530		14.0
EXC-2	J1TR31	5/21/14	0.033	U	0.033	1.7	B	0.99	0.14	JBN	0.041	4690		14.3
EXC-3	J1TR32	5/21/14	0.033	U	0.033	1.2	B	0.97	0.15	JBN	0.041	6570		14.0
EXC-4	J1TR33	5/21/14	0.17	U	0.17	0.98	U	0.98	0.085	JBN	0.041	6500		14.1
EXC-5	J1TR34	5/21/14	0.033	U	0.033	0.97	U	0.97	0.11	JBN	0.041	5160		14.0
EXC-6	J1TR35	5/21/14	0.16	U	0.16	0.98	U	0.98	0.092	JBN	0.041	5360		14.1
EXC-7	J1TR36	5/21/14	0.031	U	0.031	0.92	U	0.92	0.15	JBN	0.039	3790		13.3
EXC-8	J1TR37	5/21/14	0.031	U	0.031	0.91	U	0.91	0.082	JBN	0.038	6940		13.0
EXC-9	J1TR38	5/21/14	0.033	U	0.033	1.4	B	0.97	0.13	JBN	0.041	6050		14.0
EXC-10	J1TR39	5/27/14	0.065	B	0.030	1.2	B	0.90	0.038	U	0.038	5110		12.9
EXC-11	J1TR40	5/27/14	0.12	B	0.030	1.2	B	0.90	0.038	B	0.038	7540		13.0
EXC-12	J1TR41	5/27/14	0.030	U	0.030	0.93	B	0.90	0.038	U	0.038	7920		13.0
Split of J1TR30	J1TR45	5/21/14	0.565		0.0999	1.21	B	0.999	0.425	B	0.0999	9700		7.99
RR-1	J1J4H9	6/13/11	0.031	U	0.031	0.93	U	0.93	0.050	B	0.039	6100	X	13.4
Duplicate of J1J4H9	J1J4J0	6/13/11	0.028	U	0.028	0.84	U	0.84	0.040	B	0.035	5740	X	12.2
N-84-6a	J1T9D9	2/6/14	0.035	U	0.035	1.0	B	1.0	0.099	B	0.044	11000		15.0
FS-1	J1TR44	5/21/14	0.17	U	0.17	0.99	U	0.99	0.066	JBN	0.042	8240		14.3
Equipment Blank	J1TR43	5/21/14	0.029	U	0.029	0.85	U	0.85	0.036	UJN	0.036	23.4	B	12.3

Sample Location	HEIS Number	Sample Date	Chromium			Cobalt			Copper			Hexavalent Chromium		
			mg/kg	Q	PQL	mg/kg	Q	PQL	mg/kg	Q	PQL	mg/kg	Q	PQL
EXC-1	J1TR30	5/21/14	21.1	J	0.057	7.5	X	0.098	386	JM	0.21	0.430		0.155
Duplicate of J1TR30	J1TR42	5/21/14	26.7	J	0.057	7.6	X	0.099	24.3	J	0.21	0.320		0.155
EXC-2	J1TR31	5/21/14	13.2	J	0.059	9.2	X	0.10	16.6	J	0.22	0.155	U	0.155
EXC-3	J1TR32	5/21/14	11.8	J	0.057	8.9	X	0.099	15.0	J	0.21	0.281		0.155
EXC-4	J1TR33	5/21/14	7.6	J	0.058	12.8	X	0.50	21.6	J	1.1	0.198		0.155
EXC-5	J1TR34	5/21/14	9.0	J	0.057	8.6	X	0.099	15.4	J	0.21	0.243		0.155
EXC-6	J1TR35	5/21/14	4.4	J	0.058	11.8	X	0.50	17.3	J	1.1	0.221		0.155
EXC-7	J1TR36	5/21/14	9.2	J	0.055	8.7	X	0.094	13.8	J	0.20	0.155	U	0.155
EXC-8	J1TR37	5/21/14	6.1	J	0.054	9.1	X	0.093	13.4	J	0.20	0.177		0.155
EXC-9	J1TR38	5/21/14	11.0	J	0.057	9.2	X	0.099	15.8	J	0.22	0.155	U	0.155
EXC-10	J1TR39	5/27/14	10.5		0.053	7.3	X	0.092	16.3	X	0.20	0.221		0.155
EXC-11	J1TR40	5/27/14	26.0		0.053	6.7	X	0.092	17.9	X	0.20	0.155	U	0.155
EXC-12	J1TR41	5/27/14	32.0		0.054	7.2	X	0.092	17.1	X	0.20	0.155	U	0.155
Split of J1TR30	J1TR45	5/21/14	35.4	*	0.15	7.45	D	0.749	30.7	*	0.30	0.121	U	0.121
RR-1	J1J4H9	6/13/11	4.5	X	0.055	11.0	X	0.095	17.7	X	0.21	0.155	U	0.155
Duplicate of J1J4H9	J1J4J0	6/13/11	5.2	X	0.050	10.5	X	0.086	17.7	X	0.19	0.155	U	0.155
N-84-6a	J1T9D9	2/6/14	7.3	X	0.062	8.1	X	0.11	15.4		0.23	0.169		0.155
FS-1	J1TR44	5/21/14	4.9	J	0.059	15.3	X	0.51	24.6	J	1.1	0.323		0.155
Equipment Blank	J1TR43	5/21/14	0.12	UJBC	0.050	0.087	UX	0.087	0.26	JB	0.19			

Attachment	1	Sheet No.	2 of 8
Originator	J. D. Skoglie	Date	6/18/14
Checked	I. B. Berezovskiy	Date	6/18/14
Calc. No.	0100N-CA-V0284	Rev. No.	0

Attachment 1. 100-N-84:6 Subsite Verification Sample Results (Metals).

Sample Location	HEIS Number	Sample Date	Iron			Lead			Magnesium			Manganese		
			mg/kg	Q	PQL	mg/kg	Q	PQL	mg/kg	Q	PQL	mg/kg	Q	PQL
EXC-1	J1TR30	5/21/14	18100		3.7	10.8		0.27	4770		3.6	294		0.098
Duplicate of J1TR30	J1TR42	5/21/14	19100		3.8	10.5		0.27	4800		3.7	300		0.099
EXC-2	J1TR31	5/21/14	22700		3.8	7.0		0.27	4470		3.7	358		0.10
EXC-3	J1TR32	5/21/14	22000		3.8	9.2		0.27	4390		3.7	311		0.099
EXC-4	J1TR33	5/21/14	29400		3.8	8.3		1.4	5340		3.7	383		0.10
EXC-5	J1TR34	5/21/14	20300		3.8	5.7		0.27	4700		3.7	298		0.099
EXC-6	J1TR35	5/21/14	28000		3.8	5.2		1.3	4670		3.7	328		0.10
EXC-7	J1TR36	5/21/14	20100		3.6	5.8		0.25	3970		3.5	297		0.094
EXC-8	J1TR37	5/21/14	22500		3.5	3.9		0.25	4030		3.4	356		0.093
EXC-9	J1TR38	5/21/14	22800		3.8	6.6		0.27	4580		3.7	361		0.099
EXC-10	J1TR39	5/27/14	21400		3.5	7.7		0.25	3920		3.4	300		0.092
EXC-11	J1TR40	5/27/14	19800		3.5	6.3		0.25	4660		3.4	293		0.092
EXC-12	J1TR41	5/27/14	21800		3.5	9.2		0.25	4410		3.4	297		0.092
Split of J1TR30	J1TR45	5/21/14	19100		7.99	1.65	DU	1.65	4860		8.49	288		0.20
RR-1	J1J4H9	6/13/11	27300	X	3.6	3.0		0.26	4540	X	3.5	332	X	0.095
Duplicate of J1J4H9	J1J4J0	6/13/11	26100	X	3.3	3.7		0.23	4410	X	3.2	306	X	0.086
N-84-6a	J1T9D9	2/6/14	21300		4.0	5.2		0.29	5650		3.9	309		0.11
FS-1	J1TR44	5/21/14	35100		3.9	9.7		1.4	5110		3.8	579		0.10
Equipment Blank	J1TR43	5/21/14	139		3.3	0.28	B	0.23	11.8	B	3.2	2.5		0.087

Sample Location	HEIS Number	Sample Date	Mercury			Molybdenum			Nickel			Potassium		
			mg/kg	Q	PQL	mg/kg	Q	PQL	mg/kg	Q	PQL	mg/kg	Q	PQL
EXC-1	J1TR30	5/21/14	0.0090	B	0.0055	0.26	U	0.26	11.6	X	0.12	1310		40.4
Duplicate of J1TR30	J1TR42	5/21/14	0.0074	B	0.0055	0.26	U	0.26	11.4	X	0.12	1280		40.6
EXC-2	J1TR31	5/21/14	0.0099	B	0.0051	0.26	U	0.26	11.4	X	0.12	1670		41.5
EXC-3	J1TR32	5/21/14	0.035		0.0048	0.26	U	0.26	11.2	X	0.12	1130		40.6
EXC-4	J1TR33	5/21/14	0.0075	B	0.0053	0.26	U	0.26	10.5	X	0.12	1060		41.1
EXC-5	J1TR34	5/21/14	0.0087	B	0.0054	0.26	U	0.26	12.4	X	0.12	1120		40.6
EXC-6	J1TR35	5/21/14	0.0069	B	0.0055	0.26	U	0.26	8.3	X	0.12	714		40.9
EXC-7	J1TR36	5/21/14	0.054		0.0054	0.25	U	0.25	10.7	X	0.12	1160		38.7
EXC-8	J1TR37	5/21/14	0.0056	B	0.0048	0.24	U	0.24	8.4	X	0.11	799		37.9
EXC-9	J1TR38	5/21/14	0.010	B	0.0056	0.26	U	0.26	12.2	X	0.12	1690		40.6
EXC-10	J1TR39	5/27/14	0.0058	U	0.0058	0.3	B	0.24	9.9	X	0.11	1330		37.6
EXC-11	J1TR40	5/27/14	0.0063	B	0.0056	0.43	B	0.24	10.9	X	0.11	1300		37.7
EXC-12	J1TR41	5/27/14	0.0055	B	0.0052	0.25	B	0.24	9.4	X	0.11	1160		37.8
Split of J1TR30	J1TR45	5/21/14	0.00391	U	0.00391	0.337	B	0.200	11.2		0.15	1170	N	6.39
RR-1	J1J4H9	6/13/11	0.0056	U	0.0056	0.51	B	0.25	8.1	X	0.12	712		39.1
Duplicate of J1J4H9	J1J4J0	6/13/11	0.0053	U	0.0053	0.59	B	0.22	8.0	X	0.11	781		35.3
N-84-6a	J1T9D9	2/6/14	0.018		0.0060	0.28	U	0.28	12.7	XM	0.13	945		43.6
FS-1	J1TR44	5/21/14	0.018		0.0051	0.32	B	0.26	8.4	X	0.12	2090		41.6
Equipment Blank	J1TR43	5/21/14	0.0050	U	0.0050	0.23	U	0.23	0.12	BX	0.11	36.2	B	35.7

Sample Location	HEIS Number	Sample Date	Selenium			Silicon			Silver			Sodium		
			mg/kg	Q	PQL	mg/kg	Q	PQL	mg/kg	Q	PQL	mg/kg	Q	PQL
EXC-1	J1TR30	5/21/14	0.85	U	0.85	298	JXN	5.6	0.16	U	0.16	436		58.1
Duplicate of J1TR30	J1TR42	5/21/14	0.85	U	0.85	273	JX	5.6	0.16	U	0.16	429		58.4
EXC-2	J1TR31	5/21/14	0.87	U	0.87	412	JX	5.7	0.16	U	0.16	271		59.7
EXC-3	J1TR32	5/21/14	0.85	U	0.85	295	JX	5.6	0.16	U	0.16	586		58.4
EXC-4	J1TR33	5/21/14	0.86	U	0.86	245	JX	28.4	0.16	U	0.16	391		59.2
EXC-5	J1TR34	5/21/14	0.85	U	0.85	193	JX	5.6	0.16	U	0.16	274		58.4
EXC-6	J1TR35	5/21/14	0.86	U	0.86	392	JX	28.2	0.16	U	0.16	265		58.8
EXC-7	J1TR36	5/21/14	0.81	U	0.81	286	JX	5.3	0.15	U	0.15	699		55.7
EXC-8	J1TR37	5/21/14	0.80	U	0.80	171	JX	5.2	0.15	U	0.15	292		54.6
EXC-9	J1TR38	5/21/14	0.85	U	0.85	338	JX	5.6	0.16	U	0.16	406		58.5
EXC-10	J1TR39	5/27/14	0.79	U	0.79	381	N	5.2	0.15	U	0.15	307		54.2
EXC-11	J1TR40	5/27/14	0.79	U	0.79	326		5.2	0.15	U	0.15	250		54.2
EXC-12	J1TR41	5/27/14	0.79	U	0.79	369		5.2	0.15	U	0.15	293		54.5
Split of J1TR30	J1TR45	5/21/14	0.323	DU	0.323	739	N	1.5	0.0999	U	0.0999	366		6.99
RR-1	J1J4H9	6/13/11	0.82	U	0.82	176		5.4	0.15	U	0.15	309		56.3
Duplicate of J1J4H9	J1J4J0	6/13/11	0.74	U	0.74	156		4.9	0.14	U	0.14	314		50.9
N-84-6a	J1T9D9	2/6/14	0.92	U	0.92	179		6.0	0.17	U	0.17	315		62.8
FS-1	J1TR44	5/21/14	0.87	U	0.87	270	JX	28.7	0.16	U	0.16	4370		59.8
Equipment Blank	J1TR43	5/21/14	0.75	U	0.75	75.1	JX	4.9	0.14	U	0.14	51.3	U	51.3

Attachment	1	Sheet No.	3 of 8
Originator	J. D. Skoglie	Date	6/18/14
Checked	I. B. Berezovskiy	Date	6/18/14
Calc. No.	0100N-CA-V0284	Rev. No.	0

Attachment 1. 100-N-84:6 Subsite Verification Sample Results (Metals).

Sample Location	HEIS Number	Sample Date	Vanadium			Zinc		
			mg/kg	Q	PQL	mg/kg	Q	PQL
EXC-1	J1TR30	5/21/14	39.2		0.093	102	JN	0.39
Duplicate of J1TR30	J1TR42	5/21/14	41.0		0.093	132	J	0.39
EXC-2	J1TR31	5/21/14	51.5		0.095	48.5	J	0.40
EXC-3	J1TR32	5/21/14	50.5		0.093	46.9	J	0.39
EXC-4	J1TR33	5/21/14	82.7		0.47	53.8	J	0.40
EXC-5	J1TR34	5/21/14	46.0		0.093	41.5	J	0.39
EXC-6	J1TR35	5/21/14	77.8		0.47	48.3	J	0.40
EXC-7	J1TR36	5/21/14	49.2		0.089	56.5	J	0.38
EXC-8	J1TR37	5/21/14	56.2		0.087	42.3	J	0.37
EXC-9	J1TR38	5/21/14	51.0		0.093	82.2	J	0.39
EXC-10	J1TR39	5/27/14	49.4		0.086	52.9	XN	0.37
EXC-11	J1TR40	5/27/14	45.2		0.086	59	X	0.37
EXC-12	J1TR41	5/27/14	53.7		0.087	73.5	X	0.37
Split of J1TR30	J1TR45	5/21/14	41.9	DN	0.499	120	DN	2.0
RR-1	J1J4H9	6/13/11	64.0	X	0.090	43.8	X	0.38
Duplicate of J1J4H9	J1J4J0	6/13/11	66.8	X	0.081	44.6	X	0.36
N-84-6a	J1T9D9	2/6/14	50.6		0.10	42.1	X	0.42
FS-1	J1TR44	5/21/14	104		0.48	64.3	J	0.40
Equipment Blank	J1TR43	5/21/14	0.15	B	0.082	0.56	JB	0.35

Attachment	1	Sheet No.	4 of 8
Originator	J. D. Skoglie	Date	6/18/14
Checked	I. B. Berezovskiy	Date	6/18/14
Calc. No.	0100N-CA-V0284	Rev. No.	0

Attachment 1. 100-N-84:6 Subsite Verification Sample Results (Anions, Physical, and pH).

Sample Location	HEIS Number	Sample Date	Bromide			Chloride			Fluoride			Nitrogen in Nitrate			Nitrogen in Nitrite and Nitrate		
			mg/kg	Q	PQL	mg/kg	Q	PQL	mg/kg	Q	PQL	mg/kg	Q	PQL	mg/kg	Q	PQL
EXC-1	J1TR30	5/21/14	0.38	U	0.38	4.9		1.9	0.79	UN	0.79	4.1	J	0.30			
Duplicate of J1TR30	J1TR42	5/21/14	0.36	U	0.36	5.0		1.9	0.76	U	0.76	4.3	J	0.29			
EXC-2	J1TR31	5/21/14	0.38	U	0.38	4.0	B	1.9	1.1	B	0.79	1.9	JB	0.30			
EXC-3	J1TR32	5/21/14	0.37	U	0.37	37.6		1.9	0.77	U	0.77	13.8	J	0.30			
EXC-4	J1TR33	5/21/14	0.37	U	0.37	3.3	B	1.9	0.78	U	0.78	0.89	JB	0.30			
EXC-5	J1TR34	5/21/14	0.37	U	0.37	10.7		1.9	0.78	U	0.78	3.5	J	0.30			
EXC-6	J1TR35	5/21/14	0.36	U	0.36	4.3	B	1.9	0.77	U	0.77	0.29	UR	0.29			
EXC-7	J1TR36	5/21/14	0.38	U	0.38	18.3		1.9	1.0	B	0.79	1.6	JB	0.30			
EXC-8	J1TR37	5/21/14	0.36	U	0.36	2.8	B	1.9	0.88	B	0.76	1.0	JB	0.29			
EXC-9	J1TR38	5/21/14	0.36	U	0.36	30.8		1.9	1.3	B	0.76	1.3	JB	0.29			
EXC-10	J1TR39	5/27/14	0.26	U	0.26	7.8		1.3	0.96	BMN	0.55	1.7		0.21			
EXC-11	J1TR40	5/27/14	0.26	U	0.26	28.6		1.3	1.1	B	0.54	2.3		0.21			
EXC-12	J1TR41	5/27/14	0.26	U	0.26	59.6		1.3	1.1	B	0.54	26.5		0.21			
Split of J1TR30	J1TR45	5/21/14	0.664	U	0.664	3.3		0.664	0.327	U	0.327	3.92		0.327			
RR-1	J1J4H9	6/13/11	0.40	U	0.40	7.1		2.0	0.84	U	0.84	1.5	B	0.32	1.1		0.31
Duplicate of J1J4H9	J1J4J0	6/13/11	0.39	U	0.39	7.6		2.0	0.82	U	0.82	1.4	B	0.31	0.83		0.31
N-84-6a	J1T9D9	2/6/14	0.42	U	0.42	120		2.1	1.4	BNC	0.88	10.5		0.34	13.4		0.39
FS-1	J1TR44	5/21/14	0.37	U	0.37	4.9		1.9	0.77	UN	0.77	1.7	JB	0.29			
Equipment Blank	J1TR43	5/21/14															

Sample Location	HEIS Number	Sample Date	Nitrogen in Nitrite			Phosphorous in phosphate			Sulfate			Percent moisture (wet sample)			pH Measurement		
			mg/kg	Q	PQL	mg/kg	Q	PQL	mg/kg	Q	PQL	%	Q	PQL	pH	Q	PQL
EXC-1	J1TR30	5/21/14	0.54	JB	0.32	1.2	UNR	1.2	18.1		1.6	1.4		0.10			
Duplicate of J1TR30	J1TR42	5/21/14	0.52	JB	0.31	1.2	UR	1.2	19.2		1.6	0.99		0.10			
EXC-2	J1TR31	5/21/14	0.32	UR	0.32	1.9	JB	1.2	14.1		1.6	1.1		0.10			
EXC-3	J1TR32	5/21/14	0.32	UR	0.32	1.2	UR	1.2	251		1.6	2.0		0.10			
EXC-4	J1TR33	5/21/14	0.32	UR	0.32	1.2	UR	1.2	7.2		1.6	1.2		0.10			
EXC-5	J1TR34	5/21/14	0.32	UR	0.32	1.2	UR	1.2	53.5		1.6	1.9		0.10			
EXC-6	J1TR35	5/21/14	0.31	UR	0.31	1.2	UR	1.2	4.7		1.6	1.7		0.10			
EXC-7	J1TR36	5/21/14	0.33	UR	0.33	1.4	JB	1.2	8.4		1.6	1.9		0.10			
EXC-8	J1TR37	5/21/14	0.31	UR	0.31	1.2	UR	1.2	5.5		1.6	0.83		0.10			
EXC-9	J1TR38	5/21/14	0.31	UR	0.31	1.2	JB	1.2	18.9		1.6	2.0		0.10			
EXC-10	J1TR39	5/27/14	0.23	UR	0.23	1.6	B	0.84	13.3		1.1	1.9		0.10			
EXC-11	J1TR40	5/27/14	0.22	UR	0.22	1.5	B	0.81	10.9		1.1	1.1		0.10			
EXC-12	J1TR41	5/27/14	0.77	B	0.22	2.5	B	0.82	68.7		1.1	1.5		0.10			
Split of J1TR30	J1TR45	5/21/14	0.327	UR	0.327	0.664	UR	0.664	22.1		1.32						
RR-1	J1J4H9	6/13/11	0.34	UR	0.34	1.3	UR	1.3	5.2		1.8	3.8		0.10	9.01		0.01
Duplicate of J1J4H9	J1J4J0	6/13/11	0.33	UR	0.33	1.2	UR	1.2	5.2		1.7	2.5		0.10	9.14		0.01
N-84-6a	J1T9D9	2/6/14	0.36	UR	0.36	1.3	UNR	1.3	18.8		1.8	8.8		0.10			
FS-1	J1TR44	5/21/14	0.31	UR	0.31	1.2	UNR	1.2	138		1.6	1.4		0.10			
Equipment Blank	J1TR43	5/21/14										0.10	U	0.10			

Attachment	1	Sheet No.	5 of 8
Originator	J. D. Skoglie	Date	7/8/14
Checked	I. B. Berezovskiy	Date	7/8/14
Calc. No.	0100N-CA-V0284	Rev. No.	1

Attachment 1. 100-N-84:6 Subsite Verification Sample Results (Organics).

CONSTITUENT	CLASS	EXC-1 - J1TR30			Duplicate of J1TR30 - J1TR42			EXC-2 - J1TR31			EXC-3 - J1TR32			EXC-4 - J1TR33		
		5/21/14			5/21/14			5/21/14			5/21/14			5/21/14		
		ug/kg	Q	PQL	ug/kg	Q	PQL	ug/kg	Q	PQL	ug/kg	Q	PQL	ug/kg	Q	PQL
Aroclor-1016	PCB	2.6	U	2.6	2.6	U	2.6	2.8	U	2.8	2.8	U	2.8	2.8	U	2.8
Aroclor-1221	PCB	7.6	U	7.6	7.6	U	7.6	8.1	U	8.1	8.0	U	8.0	8.1	U	8.1
Aroclor-1232	PCB	1.9	U	1.9	1.9	U	1.9	2.0	U	2.0	2.0	U	2.0	2.0	U	2.0
Aroclor-1242	PCB	4.4	U	4.4	4.4	U	4.4	4.7	U	4.7	4.6	U	4.6	4.7	U	4.7
Aroclor-1248	PCB	4.4	U	4.4	4.4	U	4.4	4.7	U	4.7	4.6	U	4.6	4.7	U	4.7
Aroclor-1254	PCB	14		2.5	28		2.5	2.6	U	2.6	58		2.6	4.3	J	2.6
Aroclor-1260	PCB	2.5	U	2.5	2.5	U	2.5	2.6	U	2.6	2.6	U	2.6	2.6	U	2.6

CONSTITUENT	CLASS	EXC-5 - J1TR34			EXC-6 - J1TR35			EXC-7 - J1TR36			EXC-8 - J1TR37			EXC-9 - J1TR38		
		5/21/14			5/21/14			5/21/14			5/21/14			5/21/14		
		ug/kg	Q	PQL	ug/kg	Q	PQL	ug/kg	Q	PQL	ug/kg	Q	PQL	ug/kg	Q	PQL
Aroclor-1016	PCB	2.8	U	2.8	2.7	U	2.7	2.8	U	2.8	2.6	U	2.6	2.8	U	2.8
Aroclor-1221	PCB	8.0	U	8.0	7.9	U	7.9	8.1	U	8.1	7.6	U	7.6	8.1	U	8.1
Aroclor-1232	PCB	2.0	U	2.0	2.0	U	2.0	2.0	U	2.0	1.9	U	1.9	2.0	U	2.0
Aroclor-1242	PCB	4.7	U	4.7	4.6	U	4.6	4.7	U	4.7	4.4	U	4.4	4.7	U	4.7
Aroclor-1248	PCB	4.7	U	4.7	4.6	U	4.6	4.7	U	4.7	4.4	U	4.4	4.7	U	4.7
Aroclor-1254	PCB	2.6	U	2.6	2.6	U	2.6	2.6	U	2.6	2.5	U	2.5	2.6	U	2.6
Aroclor-1260	PCB	2.6	U	2.6	2.6	U	2.6	2.6	U	2.6	4.6	J	2.5	2.6	U	2.6

CONSTITUENT	CLASS	EXC-10 - J1TR39			EXC-11 - J1TR40			EXC-12 - J1TR41			Split of J1TR30 - J1TR45			RR-1 - J1J4H9		
		5/27/14			5/27/14			5/27/14			5/21/14			6/13/11		
		ug/kg	Q	PQL	ug/kg	Q	PQL	ug/kg	Q	PQL	ug/kg	Q	PQL	ug/kg	Q	PQL
Aroclor-1016	PCB	2.6	U	2.6	2.7	U	2.7	5.1	UD	5.1	2.24	UD	2.24	2.7	U	2.7
Aroclor-1221	PCB	7.5	U	7.5	8.0	U	8.0	15	UD	15	2.24	UD	2.24	7.9	U	7.9
Aroclor-1232	PCB	1.9	U	1.9	2.0	U	2.0	3.7	UD	3.7	2.24	UD	2.24	2.0	U	2.0
Aroclor-1242	PCB	4.4	U	4.4	4.6	U	4.6	8.7	UD	8.7	2.24	UD	2.24	4.6	U	4.6
Aroclor-1248	PCB	4.4	U	4.4	4.6	U	4.6	8.7	UD	8.7	2.24	UD	2.24	4.6	U	4.6
Aroclor-1254	PCB	63		2.4	36		2.6	4.8	UD	4.8	13.1	D	2.24	23	P	2.6
Aroclor-1260	PCB	2.4	UN	2.4	2.6	U	2.6	120	D	4.8	7.71	D	2.24	8.7	J	2.6

CONSTITUENT	CLASS	Duplicate of J1J4H9 - J1J4J0			N-84-6a - J1T9D9			FS-1 - J1TR44		
		6/13/11			2/6/14			5/21/14		
		ug/kg	Q	PQL	ug/kg	Q	PQL	ug/kg	Q	PQL
Aroclor-1016	PCB	2.7	U	2.7	2.9	U	2.9	2.7	U	2.7
Aroclor-1221	PCB	7.8	U	7.8	8.3	U	8.3	7.8	U	7.8
Aroclor-1232	PCB	1.9	U	1.9	2.1	U	2.1	1.9	U	1.9
Aroclor-1242	PCB	4.5	U	4.5	4.8	U	4.8	4.5	U	4.5
Aroclor-1248	PCB	4.5	U	4.5	4.8	U	4.8	4.5	U	4.5
Aroclor-1254	PCB	16	P	2.5	2.7	U	2.7	2.5	U	2.5
Aroclor-1260	PCB	4.4	JP	2.5	2.7	U	2.7	2.5	U	2.5

Attachment	1	Sheet No.	6 of 8
Originator	J. D. Skoglie	Date	6/18/14
Checked	I. B. Berezovskiy	Date	6/18/14
Calc. No.	0100N-CA-V0284	Rev. No.	0

Attachment 1. 100-N-84:6 Subsite Verification Sample Results (Organics).

CONSTITUENT	CLASS	RR-1 - J1J4H9			Duplicate of J1J4H9 - J1J4J0		
		6/13/11			6/13/11		
		ug/kg	Q	PQL	ug/kg	Q	PQL
Aldrin	PEST	0.25	U	0.25	0.26	U	0.26
Alpha-BHC	PEST	0.21	U	0.21	0.22	U	0.22
alpha-Chlordane	PEST	0.32	U	0.32	0.33	U	0.33
beta-BHC	PEST	0.65	U	0.65	0.68	U	0.68
Delta-BHC	PEST	0.40	U	0.40	0.41	U	0.41
4-4'-DDD	PEST	0.54	U	0.54	0.56	U	0.56
4-4'-DDE	PEST	0.23	U	0.23	0.24	U	0.24
4-4'-DDT	PEST	0.58	U	0.58	0.60	U	0.60
Dieldrin	PEST	0.21	U	0.21	0.21	U	0.21
Endosulfan I	PEST	0.17	U	0.17	0.18	U	0.18
Endosulfan II	PEST	0.28	UNR	0.28	0.29	UR	0.29
Endosulfan sulfate	PEST	0.27	UNR	0.27	0.28	UR	0.28
Endrin	PEST	0.30	U	0.30	0.31	U	0.31
Endrin aldehyde	PEST	0.17	UN	0.17	0.17	U	0.17
Endrin ketone	PEST	0.48	UN	0.48	0.50	U	0.50
Gamma-BHC (Lindane)	PEST	0.46	U	0.46	0.47	U	0.47
gamma-Chlordane	PEST	0.26	U	0.26	0.27	U	0.27
Heptachlor	PEST	0.21	U	0.21	0.22	U	0.22
Heptachlor epoxide	PEST	0.42	U	0.42	0.43	U	0.43
Methoxychlor	PEST	0.44	UNR	0.44	0.46	UR	0.46
Toxaphene	PEST	16	U	16	16	U	16

Attachment	1	Sheet No.	7 of 8
Originator	J. D. Skoglie	Date	7/8/14
Checked	I. B. Berezovskiy	Date	7/8/14
Calc. No.	0100N-CA-V0284	Rev. No.	1

Attachment 1. 100-N-84:6 Subsite Verification Sample Results (Organics).

CONSTITUENT	CLASS	RR-1 - J1J4H9			Duplicate of J1J4H9 - J1J4J0		
		6/13/11			6/13/11		
		ug/kg	Q	PQL	ug/kg	Q	PQL
1,2,4-Trichlorobenzene	SVOA	28	U	28	29	U	29
1,2-Dichlorobenzene	SVOA	22	U	22	22	U	22
1,3-Dichlorobenzene	SVOA	12	U	12	12	U	12
1,4-Dichlorobenzene	SVOA	14	U	14	14	U	14
2,4,5-Trichlorophenol	SVOA	10	U	10	10	U	10
2,4,6-Trichlorophenol	SVOA	10	U	10	10	U	10
2,4-Dichlorophenol	SVOA	10	U	10	10	U	10
2,4-Dimethylphenol	SVOA	67	U	67	67	U	67
2,4-Dinitrophenol	SVOA	340	U	340	340	U	340
2,4-Dinitrotoluene	SVOA	67	U	67	67	U	67
2,6-Dinitrotoluene	SVOA	28	U	28	29	U	29
2-Chloronaphthalene	SVOA	10	U	10	10	U	10
2-Chlorophenol	SVOA	21	U	21	21	U	21
2-Methylnaphthalene	SVOA	19	U	19	19	U	19
2-Methylphenol (cresol, o-)	SVOA	13	U	13	13	U	13
2-Nitroaniline	SVOA	51	U	51	51	U	51
2-Nitrophenol	SVOA	10	U	10	10	U	10
3,3'-Dichlorobenzidine	SVOA	91	U	91	92	U	92
3+4 Methylphenol (cresol, m+p)	SVOA	34	U	34	34	U	34
3-Nitroaniline	SVOA	74	U	74	74	U	74
4,6-Dinitro-2-methylphenol	SVOA	340	U	340	340	U	340
4-Bromophenylphenyl ether	SVOA	19	U	19	19	U	19
4-Chloro-3-methylphenol	SVOA	67	U	67	67	U	67
4-Chloroaniline	SVOA	83	U	83	83	U	83
4-Chlorophenylphenyl ether	SVOA	21	U	21	21	U	21
4-Nitroaniline	SVOA	74	U	74	74	U	74
4-Nitrophenol	SVOA	99	U	99	99	U	99
Acenaphthene	SVOA	10	U	10	10	U	10
Acenaphthylene	SVOA	17	U	17	17	U	17
Anthracene	SVOA	17	U	17	17	U	17
Benzo(a)anthracene	SVOA	27	J	20	24	J	20
Benzo(a)pyrene	SVOA	20	U	20	20	U	20
Benzo(b)fluoranthene	SVOA	33	JX	27	27	U	27
Benzo(ghi)perylene	SVOA	16	U	16	16	U	16
Benzo(k)fluoranthene	SVOA	41	UX	41	41	U	41
Bis(2-chloro-1-methylethyl)ether	SVOA	23	U	23	23	U	23
Bis(2-Chloroethoxy)methane	SVOA	23	U	23	23	U	23
Bis(2-chloroethyl) ether	SVOA	17	U	17	17	U	17
Bis(2-ethylhexyl) phthalate	SVOA	47	U	47	47	U	47
Butylbenzylphthalate	SVOA	44	U	44	44	U	44
Carbazole	SVOA	37	U	37	37	U	37
Chrysene	SVOA	27	J	27	28	U	28
Dibenz[a,h]anthracene	SVOA	19	U	19	19	U	19
Dibenzofuran	SVOA	20	U	20	20	U	20
Diethyl phthalate	SVOA	26	U	26	26	U	26
Dimethyl phthalate	SVOA	23	U	23	23	U	23
Di-n-butylphthalate	SVOA	29	U	29	30	U	30
Di-n-octylphthalate	SVOA	15	U	15	15	U	15
Fluoranthene	SVOA	37	U	37	37	U	37
Fluorene	SVOA	18	U	18	18	U	18
Hexachlorobenzene	SVOA	29	U	29	30	U	30
Hexachlorobutadiene	SVOA	10	U	10	10	U	10
Hexachlorocyclopentadiene	SVOA	51	U	51	51	U	51
Hexachloroethane	SVOA	22	U	22	22	U	22
Indeno(1,2,3-cd)pyrene	SVOA	22	U	22	22	U	22
Isophorone	SVOA	17	U	17	17	U	17
Naphthalene	SVOA	31	U	31	32	U	32
Nitrobenzene	SVOA	22	U	22	22	U	22
N-Nitroso-di-n-dipropylamine	SVOA	31	U	31	32	U	32
N-Nitrosodiphenylamine	SVOA	21	U	21	21	U	21
Pentachlorophenol	SVOA	340	U	340	340	U	340
Phenanthrene	SVOA	17	J	17	17	U	17
Phenol	SVOA	18	U	18	18	U	18
Pyrene	SVOA	44	J	12	34	J	12

Attachment	1	Sheet No.	8 of 8
Originator	J. D. Skoglie	Date	6/18/14
Checked	I. B. Berezovskiy	Date	6/18/14
Calc. No.	0100N-CA-V0284	Rev. No.	0

Acrobat 8.0

CALCULATION COVER SHEET

Project Title: 100-N Field Remediation **Job No. 14655**

Area: 100-N

Discipline: Environmental *Calculation No: 0100N-CA-V0285

Subject: 100-N-84:6 Subsite Direct Contact Hazard Quotient and Carcinogenic Risk Calculations

Computer Program: Excel Program No: Excel 2010

The attached calculations have been generated to document compliance with established cleanup levels. These calculations should be used in conjunction with other relevant documents in the administrative record.

Committed Calculation ☒ Preliminary ☐ Superseded ☐ Voided ☐

Rev.	Sheet Numbers	Originator	Checker	Reviewer	Approval	Date
0	Cover = 1 Summary = 3 Total = 4	J. D. Skoglie	I. B. Berezovskiy	B. L. Vedder	D. F. Obenauer	6/19/14

SUMMARY OF REVISION

WCH-DE-018 (05/08/2007) *Obtain Calc. No. from Document Control and Form from Intranet

Washington Closure Hanford CALCULATION SHEET

Originator:	J. D. Skoglie	Date:	6/19/2014	Calc. No.:	0100N-CA-V0285	Rev.:	0
Project:	100-N Field Remediation	Job No:	14655	Checked:	I. B. Berezovskiy	Date:	6/19/2014
Subject:	100-N-84:6 Subsite Direct Contact Hazard Quotient and Carcinogenic Risk Calculations					Sheet No.	1 of 3

PURPOSE:

Provide documentation to support the calculation of the direct contact hazard quotient (HQ) and excess carcinogenic risk for the 100-N-84:6 subsite. In accordance with the remedial action goals (RAGs) in the remedial design report/remedial action work plan (RDR/RAWP) (DOE-RL 2013), the following criteria must be met:

1) An HQ of <1.0 for all individual noncarcinogens
2) A cumulative HQ of <1.0 for noncarcinogens
3) An excess cancer risk of $<1 \times 10^{-6}$ for individual carcinogens
4) A cumulative excess cancer risk of $<1 \times 10^{-5}$ for carcinogens.

GIVEN/REFERENCES:

1) DOE-RL, 2006, *100-N Area Sampling and Analysis Plan for CERCLA Waste Sites*, DOE/RL-2005-92, Rev. 0, U.S. Department of Energy, Richland Operations Office, Richland, Washington.

2) DOE-RL, 2013, *Remedial Design Report/Remedial Action Work Plan for the 100-N Area*, DOE/RL-2005-93, Rev. 1, U.S. Department of Energy, Richland Operations Office, Richland, Washington.

3) WAC 173-340, "Model Toxics Control Act – Cleanup," *Washington Administrative Code*, 1996.

4) WCH, 2014, *100-N-84:6 Subsite Cleanup Verification 95% UCL Calculations,* 0100N-CA-V0284, Washington Closure Hanford, Inc., Richland, Washington.

SOLUTION:

1) Generate an HQ for each noncarcinogenic constituent detected above background or required detection limit/practical quantitation limit and compare it to the individual HQ of <1.0 (DOE-RL 2013).

2) Sum the HQs and compare this value to the cumulative HQ of <1.0.

3) Generate an excess cancer risk value for each carcinogenic constituent detected above background or required detection limit/practical quantitation limit and compare it to the excess cancer risk of $<1 \times 10^{-6}$ (DOE-RL 2013).

4) Sum the excess cancer risk value(s) and compare it to the cumulative cancer risk of $<1 \times 10^{-5}$.

Washington Closure Hanford CALCULATION SHEET

Originator:	J. D. Skoglie	Date:	6/19/2014	Calc. No.:	0100N-CA-V0285	Rev.:	0
Project:	100-N Field Remediation	Job No:	14655	Checked:	I. B. Berezovskiy	Date:	6/19/2014
Subject:	100-N-84:6 Subsite Direct Contact Hazard Quotient and Carcinogenic Risk Calculations					Sheet No. 2 of 3	

METHODOLOGY:

The 100-N-84:6 subsite is comprised of one decision unit for verification sampling consisting of the excavation area and focused sampling at three areas; river road, road crossing, and FS-1. The direct contact hazard quotient and carcinogenic risk calculations for the 100-N-84:6 subsite were conservatively calculated for the entire waste site using the greater of the maximum or statistical verification soil sample results (WCH 2014). Of the contaminants of potential concern (COPCs) for this site, boron, hexavalent chromium, molybdenum, the detected semivolatiles (SVOAs), nitrogen in nitrite, and the detected polychlorinated biphenyls (PCBs) require HQ and risk calculations because these analytes were detected and a Washington State or Hanford Site background value is not available. Barium, chromium, copper, manganese, vanadium, zinc, and nitrogen in nitrate were all included because these analytes were detected above the Washington State or Hanford Site background. All other site nonradionuclide COPCs were not detected or were quantified below background levels. An example of the HQ and risk calculations is presented below:

1) For example, the statistical value for boron is 1.1 mg/kg, divided by the noncarcinogenic RAG value of 16,000 mg/kg (calculated in accordance with the noncarcinogenic toxics effects formula in WAC 173-340-740[3]), is 6.9×10^{-5}. Comparing this value, and all other individual values, to the requirement of <1.0, this criterion is met.

2) After the HQ calculation is completed for the appropriate analytes, the cumulative HQ can be obtained by summing the individual values. To avoid errors due to intermediate rounding, the individual HQ values prior to rounding are used for this calculation. The sum of the HQ values is 3.1×10^{-1}. Comparing this value to the requirement of <1.0, this criterion is met.

3) To calculate the excess cancer risk, the maximum or statistical value is divided by the carcinogenic RAG value, then multiplied by 1.0×10^{-6}. For example, the maximum value for hexavalent chromium is 0.323 mg/kg, divided by 2.1 mg/kg, and multiplied as indicated, is 1.5×10^{-7}. Comparing this value, and all other individual values, to the requirement of $<1 \times 10^{-6}$, this criterion is met.

4) After these calculations are completed for the carcinogenic analytes, the cumulative excess cancer risk can be obtained by summing the individual values. To avoid errors due to intermediate rounding, the individual cancer risk values prior to rounding are used for this calculation. The sum of the excess cancer risk values is 5.6×10^{-7}. Comparing this value to the requirement of $<1 \times 10^{-5}$, this criterion is met.

RESULTS:

1) List individual noncarcinogens and corresponding HQs >1.0: None
2) List the cumulative noncarcinogenic HQ >1.0: None
3) List individual carcinogens and corresponding excess cancer risk $>1 \times 10^{-6}$: None
4) List the cumulative excess cancer risk for carcinogens $>1 \times 10^{-5}$: None

Table 1 shows the results of the hazard quotient and excess cancer risk calculations.

Washington Closure Hanford CALCULATION SHEET

Originator:	J. D. Skoglie	Date:	6/19/2014	Calc. No.:	0100N-CA-V0285	Rev.:	0
Project:	100-N Field Remediation	Job No:	14655	Checked:	I. B. Berezovskiy	Date:	6/19/2014
Subject:	100-N-84:6 Subsite Direct Contact Hazard Quotient and Carcinogenic Risk Calculations					Sheet No. 3 of 3	

Table 1. Direct Contact Hazard Quotient and Excess Cancer Risk Results for the 100-N-84:6 Subsite.

Contaminants of Potential Concern	Maximum or Statistical Value [a] (mg/kg)	Noncarcinogen RAG [b] (mg/kg)	Hazard Quotient	Carcinogen RAG [b] (mg/kg)	Carcinogen Risk
Metals					
Barium	194	16,000	1.2E-02	--	--
Boron	1.1	16,000	6.9E-05	--	--
Chromium, total	20.8	120,000	1.7E-04	--	--
Chromium, hexavalent [c]	0.323	240	1.3E-03	2.1	1.5E-07
Copper	58.0	2,960	2.0E-02	--	--
Manganese	579	11,200	5.2E-02	--	--
Molybdenum	0.59	400	1.5E-03	--	--
Vanadium	104	560	1.9E-01	--	--
Zinc	70.4	24,000	2.9E-03	--	--
Semivolatiles					
Benzo(a)anthracene	0.027	--	--	1.37	2.0E-08
Benzo(b)fluoranthene	0.033	--	--	1.37	2.4E-08
Chrysene	0.027	--	--	137	2.0E-10
Phenanthrene [d]	0.017	24,000	7.1E-07	--	--
Pyrene	0.034	2,400	1.4E-05	--	--
Anions					
Nitrogen in nitrate	21.9	128,000	1.7E-04	--	--
Nitrogen in nitrite	0.77	8,000	9.6E-05	--	--
Polychlorinated Biphenyls					
Aroclor-1254	0.063	1.6	3.9E-02	0.5	1.3E-07
Aroclor-1260	0.12	--	--	0.5	2.4E-07
Totals					
Cumulative Hazard Quotient:			**3.1E-01**		
Cumulative Excess Cancer Risk:					**5.6E-07**

Notes:

[a] = From WCH (2014).

[b] = Value obtained from the 100-N Area RDR/RAWP (DOE-RL 2013) or *Washington Administrative Code* (WAC) 173-340-740(3), Method B, 1996, unless otherwise noted.

[c] = Value for the carcinogen RAG calculated based on the inhalation exposure pathway (WAC) 173-340-750(3), 1996.

[d] = Toxicity data for this chemical is not available. The cleanup levels are based on use of surrogate chemicals.

phenanthrene surrogate: anthracene

-- = not applicable

RAG = remedial action goal

CONCLUSION:

The calculations in Table 1 demonstrate that the 100-N-84:6 subsite meets the requirements for the direct contact hazard quotient and carcinogenic (excess cancer) risk as identified in the RDR/RAWP (DOE-RL 2013) and SAP (DOE-RL 2006). The direct contact hazard quotient and carcinogenic (excess cancer) risk calculations are for use in the RSVP for the 100-N-84:6 subsite.

Acrobat 8.0

CALCULATION COVER SHEET

Project Title: 100-N Field Remediation **Job No. 14655**

Area: 100-N

Discipline: Environmental *Calculation No: 0100N-CA-V0286

Subject: 100-N-84:6 Subsite Hazard Quotient and Carcinogenic Risk Calculation for Protection of Groundwater

Computer Program: Excel Program No: Excel 2010

The attached calculations have been generated to document compliance with established cleanup levels. These calculations should be used in conjunction with other relevant documents in the administrative record.

Committed Calculation ☒ Preliminary ☐ Superseded ☐ Voided ☐

Rev.	Sheet Numbers	Originator	Checker	Reviewer	Approval	Date
0	Cover = 1 Sheets = 3 Total = 4	J. D. Skoglie	I. B. Berezovskiy	B. L. Vedder	D. F. Obenauer	4/18/14

SUMMARY OF REVISION

WCH-DE-018 (05/08/2007)	*Obtain Calc. No. from Document Control and Form from Intranet

Washington Closure Hanford CALCULATION SHEET

Originator:	J. D. Skoglie	Date:	06/19/14	Calc. No.:	0100N-CA-V0286	Rev.:	0
Project:	100-N Field Remediation	Job No:	14655	Checked:	I. B. Berezovskiy	Date:	06/19/14
Subject:	100-N-84:6 Subsite Hazard Quotient and Carcinogenic Risk Calculation for Protection of Groundwater					Sheet No. 1 of 3	

PURPOSE:

Provide documentation to support the calculation of the hazard quotient (HQ) and excess carcinogenic risk associated with soil contaminant levels compared to soil cleanup levels for protection of groundwater for the 100-N-84:6 subsite. In accordance with the remedial action goals (RAGs) in the remedial design report/remedial action work plan (RDR/RAWP) for the 100-N Area (DOE-RL 2013), the following criteria must be met:

1) An HQ of <1.0 for all individual noncarcinogens
2) A cumulative HQ of <1.0 for noncarcinogens
3) An excess cancer risk of $<1 \times 10^{-6}$ for individual carcinogens
4) A cumulative excess cancer risk of $<1 \times 10^{-5}$ for carcinogens.

GIVEN/REFERENCES:

1) DOE-RL, 2013, *Remedial Design Report/Remedial Action Work Plan for the 100-N Area,* DOE/RL-2005-93, Rev. 1, U.S. Department of Energy, Richland Operations Office, Richland, Washington.

2) WAC 173-340, "Model Toxics Control Act – Cleanup," *Washington Administrative Code*, 1996.

3) WCH, 2014, *100-N-84:6 Subsite Cleanup Verification 95% UCL Calculations*, 0100N-CA-V0284, Washington Closure Hanford, Richland, Washington.

SOLUTION:

1) Generate a HQ for each noncarcinogenic constituent detected above background in soil and with a K_d less than that required to show no migration to groundwater in 1,000 years using the RESRAD generic site model (DOE-RL 2013).

2) Sum the HQs and compare this value to the cumulative HQ of <1.0.

3) Generate an excess cancer risk value for each carcinogenic constituent detected above background in soil and with a K_d less than that required to show no migration to groundwater in 1,000 years using the RESRAD generic site model (DOE-RL 2013).

4) Sum the excess cancer risk value(s) and compare it to the cumulative cancer risk of $<1 \times 10^{-5}$.

Washington Closure Hanford CALCULATION SHEET

Originator:	J. D. Skoglie	Date:	06/19/14	Calc. No.:	0100N-CA-V0286	Rev.:	0
Project:	100-N Field Remediation	Job No:	14655	Checked:	I. B. Berezovskiy	Date:	06/19/14
Subject:	100-N-84:6 Subsite Hazard Quotient and Carcinogenic Risk Calculation for Protection of Groundwater					Sheet No. 2 of 3	

METHODOLOGY:

The 100-N-84:6 subsite is comprised of one decision unit for verification sampling, consisting of the excavation. In addition, three focused samples were collected; river road, road crossing, and FS-1. The protection of groundwater hazard quotient and carcinogenic risk calculations for the 100-N-84:6 subsite were conservatively calculated for the entire subsite using the statistical or maximum value for each analyte (WCH 2014). Based on the generic site RESRAD model (DOE-RL 2013) and a vadose zone of approximately 8.0 m (26.2 ft) thickness, a K_d of 8.8 or greater is required to show no predicted migration to groundwater in 1,000 years. Boron, hexavalent chromium, and nitrogen in nitrite are included because they have a K_d of less than 8.8, and no Hanford Site background value has been established. Nitrogen in nitrate was included because it has a K_d of less than 8.8 and a value greater than the Hanford Site background. All other site nonradionuclide COPCs were undetected, quantified below background levels, or have a K_d greater than or equal to 8.8. An example of the HQ and risk calculations for soil constituents with a potential impact to groundwater is presented below:

1) The hazard quotient is defined as the ratio of the dose of a substance obtained over a specified time (mg/kg/day) to a reference dose for the same substance derived over the same specified time (mg/kg/day). The hazard quotient can also be calculated as the ratio of the concentration in soil (maximum or statistical value) (mg/kg) to the soil RAG (mg/kg) for protection of groundwater, where the RAG is the groundwater cleanup level (µg/L) (calculated with, and related to the hazard quotient through, WAC 173-340-720 (3)(a)(ii)(A), (1996) x 100 x 1 mg/1000 µg (conversion factor). This is based on the "100 times rule" of WAC 173-340-740(3)(a)(ii) (A) (1996). For example, the maximum value for boron of 1.1 mg/kg, divided by the noncarcinogenic RAG value of 320 mg/kg is 3.4×10^{-3}. Comparing this value to the requirement of <1.0, this criterion is met.

2) After the HQ calculation is completed for the appropriate analytes, the cumulative HQ can be obtained by summing the individual values. (To avoid errors due to intermediate rounding, the individual HQ values prior to rounding are used for this calculation.) The cumulative HQ for the 100-N-84:6 subsite is 8.4×10^{-2}. Comparing this value to the requirement of <1.0, this criterion is met.

3) To calculate the excess cancer risk, the maximum or statistical value is divided by the carcinogenic RAG value, and then multiplied by 1×10^{-6}. There were not any constituents in this calculation that had a carcinogenic RAG associated with it. Therefore, the requirement of $<1 \times 10^{-6}$ is met. Furthermore, the criterion for cumulative excess cancer risk for carcinogens is also met.

4) The soil cleanup RAGs for protection of groundwater are based on the "100 times" provision in WAC 173-340-740(3)(a)(ii)(A). WAC 173-340-740(3)(a)(ii)(A) (1996) provides the "100 times rule" but also states "unless it can be demonstrated that a higher soil concentration is protective of ground water at the site." When the "100 times rule" values are exceeded, RESRAD was used to demonstrate that higher soil concentrations may be protective of groundwater.

Washington Closure Hanford CALCULATION SHEET

Originator:	J. D. Skoglie	Date:	06/19/14	Calc. No.:	0100N-CA-V0286	Rev.:	0
Project:	100-N Field Remediation	Job No:	14655	Checked:	I. B. Berezovskiy	Date:	06/19/14
Subject:	100-N-84:6 Subsite Hazard Quotient and Carcinogenic Risk Calculation for Protection of Groundwater					Sheet No. 3 of 3	

RESULTS:

1) List individual noncarcinogens and corresponding HQs >1.0: None
2) List the cumulative noncarcinogenic HQ >1.0: None
3) List individual carcinogens and corresponding excess cancer risk >1 x 10^{-6}: None
4) List the cumulative excess cancer risk for carcinogens >1 x 10^{-5}: None.

Table 1 shows the results of the calculations.

Table 1. Hazard Quotient and Excess Cancer Risk Results for the 100-N-84:6 Subsite.

Contaminants of Potential Concern	Maximum or Statistical Value[a] (mg/kg)	Noncarcinogen RAG[b] (mg/kg)	Hazard Quotient	Carcinogen RAG[b] (mg/kg)	Carcinogen Risk
Metals					
Boron	1.1	320	3.4E-03	--	--
Chromium, hexavalent	0.323	4.8	6.7E-02	--	--
Anions					
Nitrogen in nitrate	21.9	2,560	8.6E-03	--	--
Nitrogen in nitrite	0.77	160	4.8E-03	--	--
Totals					
Cumulative Hazard Quotient:			**8.4E-02**		
Cumulative Excess Cancer Risk:					**0.0E+00**

Notes:
[a] = From WCH (2014).
[b] = Value obtained from the Cleanup Levels and Risk Calculations (CLARC) database using Groundwater, Method B, results and the 100 times model.
-- = not applicable
RAG = remedial action goal

CONCLUSION:

This calculation demonstrates that the 100-N-84:6 subsite meets the requirements for the hazard quotient and excess carcinogenic risk for protection of groundwater as identified in the RDR/RAWP (DOE-RL 2013).

APPENDIX D

DATA QUALITY ASSESSMENT

APPENDIX D

DATA QUALITY ASSESSMENT

VERIFICATION SAMPLING

A data quality assessment (DQA) was performed to compare the verification sampling approach and resulting analytical data with the sampling and data requirements specified in the site-specific sample design (WCH 2014c). This DQA was performed in accordance with site-specific data quality objectives found in the *100-N Area Sampling and Analysis Plan for CERCLA Waste Sites* (100-N Area SAP) (DOE-RL 2006).

A review of the sample design (WCH 2014c), "100-N FR South River Road Agreement" (WCH 2011b), the field logbooks (WCH 2011a, 2014a, 2014b), and the applicable analytical data packages has been performed as part of this DQA. All samples were collected and analyzed per the sample design.

To ensure quality data, the 100-N Area SAP data assurance requirements and the data validation procedures for chemical analysis and radiochemical analysis (BHI 2000a, 2000b) are used as appropriate. This review involves evaluation of the data to determine if they are of the right type, quality, and quantity to support the intended use (i.e., closeout decisions). The DQA completes the data life cycle (i.e., planning, implementation, and assessment) that was initiated by the data quality objectives process (EPA 2006).

Verification data from samples collected at the 100-N-84:6 subsite were provided by the laboratories in six sample delivery groups (SDGs): SDG JP0811, SDG JP0808, SDG XP0095, SDG JP0735, SDG J01134, and SDG MA02662. SDG JP0808 was submitted for third-party validation. Major and minor deficiencies are discussed for the 100-N-84:6 data set as follows below. If no comments are made about a specific analysis, it should be assumed that no deficiencies affecting the quality of the data were found.

MAJOR DEFICIENCIES

Due to holding time exceedances in the method 9056M ion chromatography (IC) anions analysis of greater than twice the limit of 48 hours, third-party validation qualified the associated undetected nitrite, nitrate, and orthophosphate results in SDG JP0808 as rejected with "R" flags. Additionally, all of the detected method 9056M nitrate, nitrite, and orthophosphate results are qualified as estimated with "J" flags. Nitrate, nitrite, and orthophosphate are not included in the 100-N-84:6 contaminant of potential concern (COPC) list, instead the analysis for nitrate, nitrite, and orthophosphate was performed as part of the expanded list of IC anions. Therefore, the estimated and rejected data for nitrate, nitrite, and orthophosphate do not hinder the evaluation of the 100-N-84:6 subsite. Phosphate is not a regulated chemical under *Washington Administrative Code* (WAC) 173-340, "Model Toxics Control Act – Cleanup."

In the IC anions analysis, the holding times for nitrate, nitrite, and orthophosphate were exceeded by more than twice the acceptable range on all samples. The project qualified all undetected nitrate, nitrite, and orthophosphate results for SDG JP0811, SDG JP0735, SDG XP0095, and SDG J01134 as rejected with "R" flags.

In SDG J01134, the sample J1J4H9 was collected from sample location RR-1, per the "100-N FR South River Road Agreement" (WCH 2011b). In the pesticide analysis, endosulfan II, endosulfan sulfate, and methoxychlor were undetected or had unacceptably low recoveries in the matrix spike and matrix spike duplicate results. All endosulfan II, endosulfan sulfate, and methoxychlor results have been rejected by the project. Pesticides were undetected in all field samples. In addition, pesticides were analyzed as a conservative approach for the 100-N FR South River Road Agreement and are not considered COPCs for the 100-N-84:6 subsite. Therefore, it is concluded that the resulting data set is sufficient for the intended purpose of the waste site closure.

MINOR DEFICIENCIES

SDG JP0808

This SDG comprises nine statistical soil samples (J1TR30 through J1TR38) from the 100-N-84:6 subsite excavation area. This SDG includes a field duplicate pair (J1TR30/J1TR42). All samples were analyzed for ICP metals, mercury, hexavalent chromium, IC anions, and polychlorinated biphenyls (PCBs). In addition, one equipment blank (J1TR43) was collected and analyzed for ICP metals and mercury. SDG JP0808 was submitted for third-party validation. Minor deficiencies are as follows.

In the IC anions analysis, holding times were exceeded by more than twice the specified holding time for nitrate, nitrite, and orthophosphate. The nondetected results for these analytes are discussed above in the Major Deficiencies section and were qualified as rejected by third-party validation. All detected nitrate, nitrite, orthophosphate, and pH results were qualified as estimated, with "J" flags, by third-party validation. Estimated data are usable for decision-making purposes.

In the ICP metals analysis, due to method blank contamination, all chromium results in samples were qualified by third-party validation as estimated with "UJ" flags. The data are usable for decision-making purposes.

In the ICP metals analysis, the laboratory control sample (LCS) recovery is outside the quality control (QC) limits for silicon (20%). All silicon data in SDG JP0808 were qualified by third-party validation as estimated with "J" flags. Estimated data are usable for decision-making purposes.

In the ICP metals analysis, the matrix spike (MS) recoveries are out of the project acceptance criteria for six analytes (aluminum [579%], antimony [61%], copper [-1,425%], iron [829%], silicon [19%], and zinc [65%]). For aluminum, copper, and iron, the spiking concentration was

insignificant compared to the native concentration in the sample from which the MS was prepared. The deficiency in the MS is a reflection of the variability of the native concentration rather than a measure of the recovery from the sample. Antimony, silicon, and zinc did not have mismatched spike and native concentrations in the MS. All antimony, silicon, and zinc results for SDG JP0808 were qualified as estimated with "J" flags by third-party validation. Estimated data are usable for decision-making purposes.

In the ICP metals analysis, the laboratory duplicate relative percent differences (RPDs) are above the acceptance criteria of 30% for cadmium (176%), chromium (33%), and copper (174%). All cadmium, chromium, and copper data in SDG JP0808 were qualified by third-party validation as estimated with "J" flags. Estimated data are usable for decision-making purpose.

SDG JP0811

This SDG comprises three statistical soil samples (J1TR39 through J1TR41) from the 100-N-84:6 subsite excavation area. All samples were analyzed for ICP metals, mercury, hexavalent chromium, IC anions, and PCBs. Minor deficiencies are as follows.

In the IC anions analysis, holding times were exceeded by more than twice the specified holding time for nitrate, nitrite, and orthophosphate. The nondetected results for these analytes are discussed above in the Major Deficiencies section. All detected nitrate, nitrite, and orthophosphate results may be considered estimated. Estimated data are usable for decision-making purposes.

In the PCB analysis, the MS and matrix spike duplicate (MSD) for aroclor-1260 was above the QC limit at 201% and 179%, respectively. Although not qualified for MS and MSD above QC limit, the detected aroclor-1260 sample results (J1TR41) may be considered estimated. The data are usable for decision-making purposes.

In the ICP metals analysis, the LCS recovery is below the quality control (QC) limits for silicon (23%). Although not qualified for LCS recovery below QC limits, all silicon data in SDG JP0811 may be considered estimated. Estimated data are acceptable for decision-making purposes.

In the ICP metals analysis, the MS recoveries are outside of the project acceptance criteria for five analytes (aluminum [1,088%], antimony [56%], iron [179%], silicon [14%], and zinc (62%]). For aluminum and iron, the spiking concentration was insignificant compared to the native concentration in the sample from which the MS was prepared. The deficiency in the MS is a reflection of the variability of the native concentration rather than a measure of the recovery from the sample. Antimony, silicon, and zinc did not have mismatched spike and native concentrations in the MS. Although not qualified for MS recoveries outside QC limits, all antimony, silicon, and zinc results for SDG JP0811 may be considered estimated. Estimated data are usable for decision-making purposes.

In the ICP metals analysis, the laboratory duplicate RPD is above the acceptance criteria of 30% for chromium (38%). Elevated RPDs in environmental samples are generally attributed to natural heterogeneities in the sample matrix. The data are usable for decision-making purposes.

In the hexavalent chromium analysis, the laboratory duplicate RPD for hexavalent chromium is above the acceptance criteria of 30%, at 35.1%. Elevated RPDs in environmental samples are generally attributed to natural heterogeneities in the sample matrix. The data are usable for decision-making purposes.

SDG JP0735

This SDG comprises one soil focused sample (J1T9D9) from the road crossing location within the 100-N-84:6 subsite excavation. All samples were analyzed for ICP metals, mercury, hexavalent chromium, IC anions, and polychlorinated biphenyls (PCBs). Minor deficiencies are as follows

In the ICP metals analysis, the LCS recovery is below the QC limits for silicon (27%). Although not qualified for LCS recovery below QC limits, all silicon data in SDG JP0735 may be considered estimated. Estimated data are acceptable for decision-making purposes.

In the ICP metals analysis, the MS recoveries are outside of the project acceptance criteria for five analytes (aluminum [1,524%], antimony [50%], iron [846%], manganese [138%], and silicon [28%]). For aluminum and iron, the spiking concentration was insignificant compared to the native concentration in the sample from which the MS was prepared. The deficiency in the MS is a reflection of the variability of the native concentration rather than a measure of the recovery from the sample. Antimony, silicon, and zinc did not have mismatched spike and native concentrations in the MS. Although not qualified for MS recoveries outside QC limits, all antimony, silicon, and zinc results for SDG JP0735 may be considered estimated. Estimated data are usable for decision-making purposes.

In the ICP metals analysis, the laboratory duplicate RPD is above the acceptance criteria of 30% for nickel (38%). Elevated RPDs in environmental samples are generally attributed to natural heterogeneities in the sample matrix. The data are usable for decision-making purposes.

In the IC anions analysis, holding times were exceeded by more than twice the specified holding time for nitrate, nitrite, and orthophosphate. The nondetected results for these analytes are discussed above in the Major Deficiencies section. All detected nitrate, nitrite, and orthophosphate results may be considered estimated. Estimated data are usable for decision-making purposes.

SDG XP0095

This SDG comprises one statistical soil sample (J1TR45) from the excavation decision unit. Field sample J1TR45 is a split sample associated with J1TR30. This sample was analyzed for ICP metals, mercury, hexavalent chromium, IC anions, and PCBs. Minor deficiencies are as follows:

In the PCB analysis, the MS and MSD for aroclor-1016 were below the QC limits at zero for both results. The MS and MSD for aroclor-1260 were below the QC limits at 2.44% and 0%, respectively. Although not qualified for MS and MSD above QC limits, all aroclor-1016 and aroclor-1260 sample results may be considered estimated. The data are usable for decision-making purposes.

In the ICP metals analysis, the laboratory duplicate RPD is above the acceptance criteria of 30% for chromium (32%). Elevated RPDs in environmental samples are generally attributed to natural heterogeneities in the sample matrix. The data are usable for decision-making purposes.

In the ICP metals analysis, the MS recoveries are outside of the project acceptance criteria for silicon (41.6%) and zinc (138%). Although not qualified for MS recoveries outside QC limits, all silicon and zinc results for SDG XP0095 may be considered estimated. Estimated data are usable for decision-making purposes.

In the IC anions analysis, holding times were exceeded by more than twice the specified holding time for nitrate, nitrite, and orthophosphate. The nondetected results for these analytes are discussed above in the Major Deficiencies section. All detected nitrate, nitrite, and orthophosphate results may be considered estimated. Estimated data are usable for decision-making purposes.

SDG J01134

This SDG comprises one focused sample (J1J4H9) from sample location RR-1, per the "100-N FR South River Road Agreement" (WCH 2011b). This SDG includes a field duplicate pair (J1J4H9/J1J4J0). These samples were analyzed for ICP metals, mercury, hexavalent chromium, pH, IC anions, nitrite/nitrate, semivolatile organic compounds (SVOCs), PCBs, pesticides, gamma energy analysis (GEA), and strontium-90. One equipment blank sample (J1J9X2) was collected and analyzed for ICP metals and mercury. Minor deficiencies are as follows.

In the pesticide analysis, the MS/MSD recoveries for endrin aldehyde (19%, 18%) and endrin ketone (31%, 30%) were all below the QC limits. All endrin aldehyde and endrin ketone results may be considered estimated. Estimated data are usable for decision-making purposes.

In the ICP metals analysis, aluminum, barium, copper, iron, manganese, and nickel were detected in the MB at low levels, less than 1/25th of the most stringent cleanup limit. All aluminum, barium, copper, iron, manganese, and nickel results in SDG J01134 may be considered estimated. Estimated data are usable for decision-making purposes.

In the ICP metals analysis, the LCS recovery is outside the QC limits for silicon (13%). All silicon data in SDG J01134 may be considered estimated. Estimated data are acceptable for decision-making purposes.

In the ICP metals analysis, the MS recoveries are outside of the project acceptance criteria for four analytes (aluminum [1,020%], antimony [48%], iron [1,106%], and silicon [20%]). For aluminum and iron the spiking concentration was insignificant compared to the native concentration in the sample from which the MS was prepared. The deficiency in the MS is a reflection of the variability of the native concentration rather than a measure of the recovery from the sample. Antimony and silicon did not have mismatched spike and native concentrations in the MS. Antimony and silicon results for SDG J01134 may be considered estimated. Estimated data are usable for decision-making purposes.

In the ICP metals analysis, the laboratory duplicate RPD is above the acceptance criteria of 30% for arsenic at 34%. Elevated RPDs in environmental samples are generally attributed to natural heterogeneities in the sample matrix. The data are usable for decision-making purposes.

In the IC anions analysis, holding times were exceeded by more than twice the specified holding time for nitrate, nitrite, and orthophosphate. The nondetected results for these analytes are discussed above in the Major Deficiencies section. All detected nitrate, nitrite, and orthophosphate results may be considered estimated. Estimated data are usable for decision-making purposes.

SDG MA02662

This SDG comprises one focused sample (J1J4K2) from sample location RR-1, per the "100-N FR South River Road Agreement" (WCH 2011b). This SDG includes one field duplicate pair (J1J4K2/J1J4K3). These samples were analyzed for bulk asbestos. No minor deficiencies were found in SDG MA02662. The data are usable for decision-making purposes.

FIELD QUALITY ASSURANCE/QUALITY CONTROL

Relative percent difference evaluations of main sample(s) versus the laboratory duplicate(s) are routinely performed and reported by the laboratory. Any deficiencies in those calculations are reported by SDG in the previous sections.

Field quality assurance (QA) measurements are used to assess potential sources of error and cross contamination of samples that could bias results. Field QA/QC samples listed in the field logbooks (WCH 2011a, 2014a, 2014b) are shown in Table D-1. The main and QA/QC sample results are presented in Appendix C.

Table D-1. Field Quality Assurance/Quality Control Samples.

Sample Area	Main Sample	Duplicate Sample	Split Sample
Excavation area	J1TR30	J1TR42	J1TR45
RR-1	J1J4H9	J1J4J0	
RR-1 asbestos	J1J4K2	J1J4K3	

Field duplicate samples are collected to provide a relative measure of the degree of local heterogeneity in the sampling medium, unlike laboratory duplicates that are used to evaluate precision in the analytical process. The field duplicates are evaluated by computing the RPD of the sample/duplicate pair(s) for each COPC. Relative percent differences are not calculated for analytes that are not detected in both the main and duplicate sample at more than five times the target detection limit (TDL). Relative percent differences of analytes detected at low concentrations (less than five times the detection limit) are not considered to be indicative of the analytical system performance. The calculation brief in Appendix C provides details on duplicate pair evaluation and RPD calculation.

Field split samples are used to determine systematic differences (bias) between laboratories. A statistical determination of systematic differences would require larger data sets than are presented here. Such a determination is complicated by variability introduced by the natural heterogeneities inherent in field soil samples and the analytical variability that each individual laboratory experiences. Therefore, when evaluating limited field split data, relatively large RPDs are expected. No major deficiencies in the RPD calculations were found for the split sample. Minor deficiencies for the field duplicates and split samples are as follows.

In the duplicate evaluation for sample J1TR30, the RPDs calculated for copper (176.3%) are above the duplicate acceptance criteria of 30%. In the split evaluation, the RPDs calculated for copper (170.5%) and silicon (85.1%) are above the field split acceptance criteria (less than 35%). Elevated RPDs in environmental samples are generally attributed to natural heterogeneity in the sample matrix. The data are usable for decision-making purposes.

A secondary check of the data variability is used when one or both of the samples being evaluated (main and duplicate or main and split) is less than five times the TDL, including undetected analytes. In these cases, a control limit of ±2 times the TDL is used (Appendix C) to indicate that a visual check of the data is required by the reviewer. No sample required this check. A visual inspection of all of the data is also performed. No additional major or minor deficiencies are noted. The data are usable for decision-making purposes.

SUMMARY

Limited, random, or sample matrix-specific influenced batch QC issues such as those discussed above are a potential for any analysis. The number and types seen in these data sets are within expectations for the matrix types and analyses performed. The DQA review of the 100-N-84:6 subsite verification sampling data found that the analytical results are accurate within the standard errors associated with the analytical methods, sampling, and sample handling. The DQA review for the 100-N-84:6 data set concludes that the reviewed data are of the right type, quality, and quantity to support the intended use. The analytical data were found acceptable for decision-making purposes.

The verification sample analytical data are stored in the Washington Closure Hanford project-specific database prior to being submitted for inclusion in the Hanford Environmental

Information System database. The verification sample analytical data are also summarized in Appendix C.

REFERENCES

BHI, 2000a, *Data Validation Procedure for Chemical Analysis*, BHI-01435, Rev. 0, Bechtel Hanford, Inc., Richland, Washington.

BHI, 2000b, *Data Validation Procedure for Radiochemical Analysis*, BHI-01433, Rev. 0, Bechtel Hanford, Inc., Richland, Washington.

DOE-RL, 2006, *100-N Area Sampling and Analysis Plan for CERCLA Waste Sites*, DOE/RL-2005-92, Rev. 0, U.S. Department of Energy, Richland Operations Office, Richland, Washington.

EPA, 2006, *Guidance on Systematic Planning using the Data Quality Objectives Process*, EPA QA/G-4, U.S. Environmental Protection Agency, Office of Environmental Information, Washington, D.C.

WAC 173-340, 1996, "Model Toxics Control Act – Cleanup," *Washington Administrative Code*.

WCH 2011a, *100-N Field Remediation and Sampling*, Logbook EL-1652-03, pp. 10-19, 28-44, Washington Closure Hanford, Richland, Washington.

WCH, 2011b, "100-N FR South River Road Agreement," CCN 158653 to R. Varljen, Washington State Department of Ecology, from T. L. Faust, Washington Closure Hanford, Richland, Washington, May 19.

WCH, 2014a, *100-N Field Remediation and Sampling*, Logbook EL-1652-11, pp. 54-55, Washington Closure Hanford, Richland, Washington.

WCH, 2014b, *100-N Field Remediation and Sampling*, Logbook EL-1652-12, pp. 15-28, Washington Closure Hanford, Richland, Washington.

WCH, 2014c, *Work Instruction for Verification Sampling of the 100-N-84;6, 100-N Area Chemical and Process Sewer Pipelines*, 0100N-WI-G0090, Rev. 0, Washington Closure Hanford, Richland, Washington.

Task# DOE-AMRP-C-2015-0008

E-STARS[R] Report
Task Detail Report
10/14/2014 0938

TASK INFORMATION

Task#	DOE-AMRP-C-2015-0008	**Status**	Closed 10/14/2014
Subject	concur: Transmittal of Approved Waste Site Reclassification Form and Supporting Documentation for the 100-N-84:6, 100-N Area Chemical and Process Sewer Pipelines, Revision 0 (JCC)		
Reference	LM-RLCC-I-RCD-2015-0002		
Reference 2			
Due		**Task Created Date**	10/09/2014 1536
Originator	Snook, Julie	**Originator Phone**	(509) 376-0554
Deliverable	None	**Priority**	None
Category	RCD	**Generic1**	None
Class	None	**Generic2**	None
View Permissions	Normal	**Generic3**	None
Parent Task#		**Generic4**	None
Remote Task#		**Generic5**	None
Instructions	MS French will be signing this letter. bcc w/attach: AMRP Off File AMRP Rdg File JC Chance, RCD RJ Corey, AMRP EB Dagan, RCD MS French, RCD CS Louie, RCD JP Neath, RCD JA Snook, RCD RECORD NOTE: Formally transmits to Ecology; will close action LM-RLCC-I-RCD-2015-0002 - js		

ROUTING LISTS

1	Route List	Inactive
Parallel		
	• Chance, Joanne C - Approve - Approve - 10/14/2014 0937 *Instructions:*	
	• Neath, John P - FYI - Noted - 10/10/2014 1035 *Instructions:*	
2	Signature Route List	Inactive
Serial		
	• French, Mark S - Approve - Cancelled - 10/14/2014 0938 *Instructions:*	

RECEIVED
OCT 15 2014
DOE-RLCC

Task# DOE-AMRP-C-2015-0008

ATTACHMENTS

Attachments	1. LM-RLCC-I-RCD-2015-0002 Attachment and Background 2. 15-AMRP-0008 (Hedges) JCC.docx

COMMENTS

Poster	Snook, Julie - 10/14/2014 0938
	Closed
	10/9/14: MS French signed 15-AMRP-0008; closes action LM-RLCC-I-RCD-2015-0002 - js

TASK DUE DATE HISTORY

No Due Date History

SUB TASK HISTORY

No Subtasks

-- end of report --